APPENDICES
Final Remedial Investigation Report
Boeing Isaacson-Thompson Site
Tukwila, Washington

April 21, 2014

Prepared for

The Boeing Company

LANDAU ASSOCIATES
130 2nd Avenue South
Edmonds, WA 98020
(425) 778-0907

amec
AMEC Environment & Infrastructure, Inc.
3500 188th Street SW, Suite 601
Lynnwood, WA 98037-4763
425.921.4000

APPENDIX A

Previous Sediment Sample Analytical Results

TABLE A-1
SURFACE SEDIMENT ANALYTICAL RESULTS
BOEING ISAACSON-THOMPSON SITE
TUKWILA, WASHINGTON

Location	AN-029	AN-029	AN-030	AN-045	AN-046	AN-046	AN-047	DR187	DR188	DR220	EIT060	EST141
Sample ID	AN029-SS-061025	AN029-SS-061025	AN030-SS-061025	AN045-SS-080211	AN046-SS-080211	AN096-SS-080211	AN047-SS-080211	SD-DR187-0000	SD-DR188-0000	SD-DR220-0000	EIT06-01	EST09-01
Sample Date	10/25/06	10/25/06	10/25/06	02/11/08	02/11/08	02/11/08	02/11/08	08/27/98	08/25/98	08/25/98	09/26/97	09/25/97
Depth (ft bgs)	0 to 0.33	0 to 0.33	0 to 0.33	0 to 0.33	0 to 0.33	0 to 0.33	0 to 0.33	0 to 0.33	0 to 0.33	0 to 0.33	0 to 0.33	0 to 0.33
Conventionals												
Ammonia (mg-N/kg dw)												
Percent moisture (%ww)		48.6										
Total organic carbon (%dw)		1.51	1.88	1.5	3.16	2.28	2.65		1.75	2.76	0.88	1.52
Total solids (%ww)		52.3	47.9	70.2	64.6	65.1	54.2					
Total solids (preserved) (%ww)												
Total sulfides (mg/kg dw)												
Grain size (%dw)												
Fractional % >9525 microns									0.01 U	0.01 U		
Fractional % phi >-1 (>2000 microns)		1.1	1.1									
Fractional % phi >-3 (>8000 microns)												
Fractional % phi 0-1 (500-1000 microns)		2.3	1.6						0.96 J	1.94 J		
Fractional % phi -1-0 (1000-2000 microns)		1.2	1.6						0.02 J	0.83 J		
Fractional % phi 10+ (<0.98 micron)									4.69	6.38		
Fractional % phi 1-2 (250-500 microns)		8.3	2.9						1.3 J	1.35 J		
Fractional % phi -2-(-1) (2000-4000 microns)									0.01 U	0.01 J		
Fractional % phi 2-3 (125-250 microns)		16.7	4.2						3.31 J	1.9 J		
Fractional % phi -3-(-2) (4000-8000 microns)												
Fractional % phi 3-4 (62.5-125 microns)		19.8	13.6						13.43 J	7.49 J		
Fractional % phi 4-5 (31.2-62.5 microns)		20.4	26.2						22.87	18.79		
Fractional % phi 5-6 (15.6-31.2 microns)		11.1	20.4						12.63	24.23		
Fractional % phi 6-7 (7.8-15.6 microns)		7.3	11.6						27.36	18.92		
Fractional % phi 7-8 (3.9-7.8 microns)		4.4	6.3						7.17	9.8		
Fractional % phi 8-9 (1.95-3.9 microns)									4.12	4.97		
Fractional % phi 9-10 (0.98-1.95 microns)									2.14	3.22		
Fractional % Sieve 3/8-inch (4750-9525 microns)									0.01 U	0.18 J		
Total clay				5.4	5	4.8	11.3		10.95	14.57	5.6	16.08
Total fines (percent silt+clay)		43.2	64.5	15.9	17.3	17.3	59.7		80.98	86.3		
Total gravel		1.1	1.1	8.3	21.2	19.1	0.9		0.01 U	0.19 J	1.33	0.01
Total sand		48.3	23.9	75.8	61.6	63.6	39.5		19.0 J	13.5 J	80.79	14.61
Total silt		43.2	64.5	10.5	12.3	12.5	48.4		70.03	71.7	12.28	69.3
Metals (mg/kg dw)												
Aluminum								12,200	18,100	23,000		
Antimony									10 U	10 U		
Arsenic		11.3	8.9	8.2	25.5	40.6	15		12.5	15.3		
Barium								42	55	78		
Beryllium								0.25	0.34	0.42		
Cadmium		0.5	0.4 U	0.4	2.9	3.6	2.4		0.29	0.38		
Calcium								14,700	5,380	6,300		
Chromium		33.7	26	27.1 J	240 J	165 J	178 J		25	28		
Cobalt									8	10		
Copper		54.8	42	35.3 J	228 J	268 J	87.6 J		37	47		
Iron								32,900	23,900	31,600		
Lead		128	28	152 J	2,930 J	21,700 J	370 J		20.7	22.3		
Magnesium								5,940	7,130	8,450		
Manganese								558	258	336		
Mercury		6.8	0.13	0.06 U	0.14	0.19	0.29		0.13	0.14		
Molybdenum												
Nickel									18.8	20.8		
Potassium								1,180	2,180	2,670		
Selenium									10 J	12 J		
Silver		0.7	0.4 U	0.3 U	1.2	2.8	2		0.19	0.3		
Sodium								6,770	10,800	13,800		
Thallium									0.07	0.09		

TABLE A-1
SURFACE SEDIMENT ANALYTICAL RESULTS
BOEING ISAACSON-THOMPSON SITE
TUKWILA, WASHINGTON

Location	AN-029	AN-029	AN-030	AN-045	AN-046	AN-046	AN-047	DR187	DR188	DR220	EIT060	EST141
Sample ID	AN029-SS-061025	AN029-SS-061025	AN030-SS-061025	AN045-SS-080211	AN046-SS-080211	AN096-SS-080211	AN047-SS-080211	SD-DR187-0000	SD-DR188-0000	SD-DR220-0000	EIT06-01	EST09-01
Sample Date	10/25/06	10/25/06	10/25/06	02/11/08	02/11/08	02/11/08	02/11/08	08/27/98	08/25/98	08/25/98	09/26/97	09/25/97
Depth (ft bgs)	0 to 0.33	0 to 0.33	0 to 0.33	0 to 0.33	0 to 0.33	0 to 0.33	0 to 0.33	0 to 0.33	0 to 0.33	0 to 0.33	0 to 0.33	0 to 0.33
Tin								7 UJ	4	3		
Vanadium									54	71		
Zinc		154 J	96 J	75	950	1,050	280		81	98		
PAHs (ug/kg dw)												
1-Methylnaphthalene				20 U	20 U	20 U	98 U					
2-Chloronaphthalene									20 U	20 U		
2-Methylnaphthalene		20 U	20 U	20 UJ	20 UJ	20 UJ	98 UJ		20 U	20 U		
Acenaphthene		10 J	20 U	20 U	12 J	20 U	98 U		20 U	20 U		
Acenaphthylene		20 U	20 U	20 UJ	20 UJ	20 UJ	98 UJ		20 U	20 U		
Anthracene		40	26	20 UJ	43 J	29 J	98 UJ		20	20		
Benzo(a)anthracene		150	100	30 J	180 J	140 J	110 J		120	110		
Benzo(a)pyrene		200	130	43	250	210	110		140	130		
Benzo(b)fluoranthene		230	140	57	330	290	180		150	170		
Benzo(g,h,i)perylene		110	90	20	89	71	73 J		100	100		
Benzo(k)fluoranthene		190	180	45	240	210	140		170	160		
Chrysene		260	160	45 J	280 J	240 J	170 J		180	180		
cPAHs - mammal - half DL		290	190 J	62 J	350 J	290 J	170 J		210	190		
Dibenzo(a,h)anthracene		48	18 J	6.7	22	18 J	18 U		30	20		
Dibenzofuran		20 U	20 U	20 UJ	20 UJ	20 UJ	98 UJ		20 U	20 U		
Fluoranthene		410	220	68	540	460	470		340	340		
Fluorene		14 J	20 U	20 U	16 J	11 J	98 U		20 U	20 U		
Indeno(1,2,3-cd)pyrene		110	84	22	100	80 J	72 J		110	100		
Naphthalene		20 U	20 U	20 UJ	20 UJ	20 UJ	98 UJ		20 U	20 U		
Phenanthrene		190	99	24 J	240 J	180 J	180 J		140	110		
Pyrene		360	240	46 J	370 J	310 J	420		290	270		
Total benzofluoranthenes		420	320	102	570	500	320		320	330		
Total HPAHs		2,100	1,400 J	383 J	2,400 J	2,030 J	1,750 J		1,630	1,580		
Total LPAHs		250 J	125	24 J	310 J	220 J	180 J		160	130		
Total PAHs		2,300 J	1,500 J	407 J	2,710 J	2,250 J	1,930 J		1,790	1,710		
Other SVOCs (ug/kg dw)												
1,2,4-Trichlorobenzene		20 U	20 U	6.1 U	19 U	6.1 U	18 U		20 U	20 U		
1,2-Dichlorobenzene		20 U	20 U	6.1 UJ	19 UJ	6.1 UJ	18 UJ		20 U	20 U		
1,3-Dichlorobenzene		20 U	20 U	20 U	20 U	20 U	98 U		20 U	20 U		
1,4-Dichlorobenzene		20 U	20 U	6.1 U	19 U	6.1 U	18 U		20 U	20 U		
2,4,5-Trichlorophenol									200 UJ	200 UJ		
2,4,6-Trichlorophenol									200 UJ	200 UJ		
2,4-Dichlorophenol									60 UJ	60 UJ		
2,4-Dimethylphenol		20 U	20 U	6.1 UJ	19 UJ	6.1 UJ	18 UJ		20 UJ	20 UJ		
2,4-Dinitrophenol									200 UJ	200 UJ		
2,4-Dinitrotoluene									200 U	200 U		
2,6-Dinitrotoluene									200 U	200 U		
2-Chlorophenol									20 UJ	20 UJ		
2-Methylphenol		20 U	20 U	6.1 UJ	19 UJ	6.1 UJ	18 UJ		20 UJ	20 UJ		
2-Nitroaniline									100 U	100 U		
2-Nitrophenol									100 UJ	100 UJ		
3,3'-Dichlorobenzidine									200 U	200 U		
3-Nitroaniline									200 U	200 U		
4,6-Dinitro-o-cresol									200 UJ	200 UJ		
4-Bromophenyl phenyl ether									40 U	40 U		
4-Chloro-3-methylphenol									40 UJ	40 UJ		
4-Chloroaniline									60 U	60 U		
4-Chlorophenyl phenyl ether									20 U	20 U		
4-Methylphenol		20 U	20 U	20 UJ	20 UJ	20 UJ	98 UJ		20 UJ	20 UJ		
4-Nitroaniline									100 U	100 U		

TABLE A-1
SURFACE SEDIMENT ANALYTICAL RESULTS
BOEING ISAACSON-THOMPSON SITE
TUKWILA, WASHINGTON

Location	AN-029	AN-029	AN-030	AN-045	AN-046	AN-046	AN-047	DR187	DR188	DR220	EIT060	EST141
Sample ID	AN029-SS-061025	AN029-SS-061025	AN030-SS-061025	AN045-SS-080211	AN046-SS-080211	AN096-SS-080211	AN047-SS-080211	SD-DR187-0000	SD-DR188-0000	SD-DR220-0000	EIT06-01	EST09-01
Sample Date	10/25/06	10/25/06	10/25/06	02/11/08	02/11/08	02/11/08	02/11/08	08/27/98	08/25/98	08/25/98	09/26/97	09/25/97
Depth (ft bgs)	0 to 0.33	0 to 0.33	0 to 0.33	0 to 0.33	0 to 0.33	0 to 0.33	0 to 0.33	0 to 0.33	0 to 0.33	0 to 0.33	0 to 0.33	0 to 0.33
4-Nitrophenol									100 UJ	100 UJ		
Aniline												
Benzoic acid		200 U	200 U	200 U	200 U	200 U	790 J		200 U	200 U		
Benzyl alcohol		20 U	20 U	20 UJ	20 UJ	20 UJ	98 U		50 U	50 U		
bis(2-chloroethoxy)methane									40	40 U		
bis(2-chloroethyl)ether									40 U	40 U		
bis(2-chloroisopropyl)ether									40 U	40 U		
Carbazole									20	20		
Hexachlorobenzene		20 U	20 U	6.1 U	19 U	6.1 U	18 U		20 U	20 U		
Hexachlorobutadiene		20 U	20 U	6.1 U	19 U	6.1 U	18 U		20 U	20 U		
Hexachlorocyclopentadiene									100 UJ	100 UJ		
Hexachloroethane		20 U	20 U	20 U	20 U	20 U	98 U		20 U	20 U		
Isophorone									20 U	20 U		
Nitrobenzene									20 U	20 U		
n-Nitrosodimethylamine												
n-Nitroso-di-n-propylamine									40 U	40 U		
n-Nitrosodiphenylamine		20 UJ	20 UJ	6.1 UJ	19 UJ	6.1 UJ	18 UJ		40 U	40 U		
Pentachlorophenol		98 U	99 U	30 UJ	93 UJ	31 UJ	92 UJ		100 UJ	100 UJ		
Phenol		20 U	20 U	20 U	30	28	98 U		20 UJ	20 UJ		
PCBs (ug/kg dw)												
Aroclor-1016		9.7 U	9.9 U	9.9 U	9.8 U	10 U	120 U		20 U	20 U		
Aroclor-1221		9.7 U	9.9 U	9.9 U	9.8 U	10 U	120 U		40 U	40 U		
Aroclor-1232		9.7 U	9.9 U	9.9 U	9.8 U	10 U	120 U		20 U	20 U		
Aroclor-1242		19 U	16	9.9 U	9.8 U	10 U	120 U		20 U	20 U		
Aroclor-1248		9.7 U	9.9 U	9.9 U	20	25 U	1,100		20 U	20 U		
Aroclor-1254		150	72 J	120	69	89	1,800		58	42		
Aroclor-1260		71	47	40 U	43	40 U	120 U		46	35		
Aroclor-1262		9.7 U	9.9 U	9.9 U	9.8 U	10 U	120 U					
Aroclor-1268		9.7 U	9.9 U	9.9 U	9.8 U	10 U	120 U					
Total PCBs		220	135 J	120	132	89	2,900		104	77	170	110
Total PCBs + PCTs											200	130
Total PCTs											31	19
PCBs (ng/kg dw)												
PCB TEQ - mammal (half DL)								66 J				
PCB-018								1,000 UJ	1,000 UJ	1,000 UJ		
PCB-028								1,000 UJ	1,000 UJ	1,000 UJ		
PCB-044								3,000 J	1,000 J	1,000 UJ		
PCB-055								6,000 J	2,000 J	1,000 J		
PCB-066								12,000 J	4,000	3,000		
PCB-077								1,000 U	1,000 U	1,000 U	670 U	770 U
PCB-081								1,000 UJ	1,000 U	1,000 U		
PCB-101								10,000 J	4,000	3,000	25,000 J	29,000 J
PCB-105								5,000 J	1,000	1,000 U	550 U	4,300
PCB-110											550 U	7,700
PCB-114								1,000 UJ	1,000 U	1,000 U		
PCB-118								11,000 J	3,000	2,000	5,600	8,700
PCB-123								2,000 UJ	1,000 U	1,000 U		
PCB-126								1,000 UJ	1,000 U	1,000 U	610 U	690 U
PCB-128								4,000 J	1,000	1,000 U	590 U	3,800 J
PCB-138								21,000	6,000	4,000	7,300	8,400
PCB-153								12,000 J	4,000	3,000	15,000 J	23,000 J
PCB-156								2,000 J	1,000 U	1,000 U	530 U	610 U
PCB-157								1,000 UJ	1,000 U	1,000 U		540 U
PCB-167								1,000 UJ	1,000 U	1,000 U		

TABLE A-1
SURFACE SEDIMENT ANALYTICAL RESULTS
BOEING ISAACSON-THOMPSON SITE
TUKWILA, WASHINGTON

Location	AN-029	AN-029	AN-030	AN-045	AN-046	AN-046	AN-047	DR187	DR188	DR220	EIT060	EST141
Sample ID	AN029-SS-061025	AN029-SS-061025	AN030-SS-061025	AN045-SS-080211	AN046-SS-080211	AN096-SS-080211	AN047-SS-080211	SD-DR187-0000	SD-DR188-0000	SD-DR220-0000	EIT06-01	EST09-01
Sample Date	10/25/06	10/25/06	10/25/06	02/11/08	02/11/08	02/11/08	02/11/08	08/27/98	08/25/98	08/25/98	09/26/97	09/25/97
Depth (ft bgs)	0 to 0.33	0 to 0.33	0 to 0.33	0 to 0.33	0 to 0.33	0 to 0.33	0 to 0.33	0 to 0.33	0 to 0.33	0 to 0.33	0 to 0.33	0 to 0.33
PCB-169								1,000 UJ	1,000 U	1,000 U	1,500 U	1,700 U
PCB-170								7,000 UJ	2,000 U	2,000 U	530 U	7,800
PCB-180								7,000 J	2,000	2,000	5,500	11,000
PCB-187								3,000 J	2,000	1,000		
PCB-189								1,000 UJ	1,000 U	1,000 U	680 U	780 U
PCB-195								1,000 UJ	1,000 U	1,000 U		
PCB-206								1,000 UJ	1,000 U	1,000 U		
PCB-209								1,000 UJ	1,000 U	1,000 U		
Phthalates (ug/kg dw)												
Bis(2-ethylhexyl)phthalate		570	200	33 UJ	250 J	320 J	950 J		260	400		
Butyl benzyl phthalate		83	29	36	55	70 J	2,200		60	30		
Diethyl phthalate		20 U	20 U	20 UJ	20 UJ	20 UJ	98 UJ		20 U	20 U		
Dimethyl phthalate		37	15 J	12 J	47 U	38 J	310 J		40	20 U		
Di-n-butyl phthalate		96 U	32 U	100 J	33 J	28 J	300 J		20 U	20 U		
Di-n-octyl phthalate		20 U	20 U	20 UJ	20 UJ	15 J	98 UJ		20 U	20 U		
Organometals (ug/kg dw)												
Dibutyltin as ion								20				
Monobutyltin as ion								8.0 J				
Tetrabutyltin as ion								5.0 U				
Tributyltin as ion								27				
Pesticides (ug/kg dw)												
2,4'-DDD	9.8 U											
2,4'-DDE	9.8 U											
2,4'-DDT	9.8 U											
4,4'-DDD	9.8 U											
4,4'-DDE	9.8 U											
4,4'-DDT	22 U											
Aldrin	4.9 U											
alpha-BHC	4.9 U											
alpha-Chlordane	4.9 U											
alpha-Endosulfan	4.9 U											
beta-BHC	4.9 U											
beta-Chlordane												
beta-Endosulfan	9.8 U											
cis-Nonachlor	9.8 U											
delta-BHC	40 U											
Dieldrin	9.8 U											
Endosulfan sulfate	9.8 U											
Endrin	9.8 U											
Endrin aldehyde	9.8 U											
Endrin ketone	9.8 U											
gamma-BHC	4.9 U											
gamma-Chlordane	4.9 U											
Heptachlor	4.9 U											
Heptachlor epoxide	4.9 U											
Methoxychlor	49 U											
Mirex												
Oxychlordane												
Total aldrin/dieldrin	9.8 U											
Total chlordane	9.8 U											
Total DDTs	22 U											
Toxaphene	490 U											
trans-Nonachlor	9.8 U											
VOCs (ug/kg dw)												

TABLE A-1
SURFACE SEDIMENT ANALYTICAL RESULTS
BOEING ISAACSON-THOMPSON SITE
TUKWILA, WASHINGTON

Location	AN-029	AN-029	AN-030	AN-045	AN-046	AN-046	AN-047	DR187	DR188	DR220	EIT060	EST141
Sample ID	AN029-SS-061025	AN029-SS-061025	AN030-SS-061025	AN045-SS-080211	AN046-SS-080211	AN096-SS-080211	AN047-SS-080211	SD-DR187-0000	SD-DR188-0000	SD-DR220-0000	EIT06-01	EST09-01
Sample Date	10/25/06	10/25/06	10/25/06	02/11/08	02/11/08	02/11/08	02/11/08	08/27/98	08/25/98	08/25/98	09/26/97	09/25/97
Depth (ft bgs)	0 to 0.33	0 to 0.33	0 to 0.33	0 to 0.33	0 to 0.33	0 to 0.33	0 to 0.33	0 to 0.33	0 to 0.33	0 to 0.33	0 to 0.33	0 to 0.33
1,1,1,2-Tetrachloroethane								2.3 U				
1,1,1-Trichloroethane								2.3 U				
1,1,2,2-Tetrachloroethane								2.3 U				
1,1,2-Trichloroethane								2.3 U				
1,1,2-Trichlorotrifluoroethane								2.3 U				
1,1-Dichloroacetone								4.6 U				
1,1-Dichloroethane								2.3 U				
1,1-Dichloroethene								2.3 U				
1,1-Dichloropropene								2.3 U				
1,2,3-Trichlorobenzene								4.6 U				
1,2,3-Trichloropropane								2.3 U				
1,2,4-Trimethylbenzene								2.3 U				
1,2-Dibromo-3-chloropropane								11.5 U				
1,2-Dibromoethane (EDB)								2.3 U				
1,2-Dichloroethane								2.3 U				
1,2-Dichloropropane								2.3 U				
1,3,5-Trimethylbenzene								2.3 U				
1,3-Dichloropropane								2.3 U				
1-Chlorobutane								2.3 U				
2,2-Dichloropropane								2.3 U				
2-Chlorotoluene								2.3 U				
2-Hexanone								4.6 U				
2-Nitropropane								11.5 U				
4-Chlorotoluene								2.3 U				
Acetone								23 UJ				
Allyl chloride								2.3 U				
Benzene								2.3 U				
Bromobenzene								2.3 U				
Bromochloromethane								2.3 U				
Bromodichloromethane								2.3 U				
Bromoform								4.6 U				
Bromomethane								11.5 U				
Carbon disulfide								4.6 U				
Carbon tetrachloride								2.3 U				
Chlorobenzene								2.3 U				
Chloroethane								4.6 U				
Chloroform								2.3 U				
Chloromethane								2.3 U				
cis-1,2-Dichloroethene								2.3 U				
cis-1,3-Dichloropropene								2.4 U				
Dibromochloromethane								2.3 U				
Dibromomethane								2.3 U				
Dichloromethane								11.5 U				
Diethyl ether								2.3 U				
Ethyl methacrylate								2.3 U				
Ethylbenzene								2.3 U				
Iodomethane								2.3 U				
Isopropylbenzene								11.5 U				
m,p-Xylene								4.6 U				
Methacrylonitrile								11.5 U				
Methyl acrylate								11.5 U				
Methyl ethyl ketone								4.6 U				
Methyl isobutyl ketone								4.6 U				
Methyl methacrylate								4.6 U				

TABLE A-1
SURFACE SEDIMENT ANALYTICAL RESULTS
BOEING ISAACSON-THOMPSON SITE
TUKWILA, WASHINGTON

Location	AN-029	AN-029	AN-030	AN-045	AN-046	AN-046	AN-047	DR187	DR188	DR220	EIT060	EST141
Sample ID	AN029-SS-061025	AN029-SS-061025	AN030-SS-061025	AN045-SS-080211	AN046-SS-080211	AN096-SS-080211	AN047-SS-080211	SD-DR187-0000	SD-DR188-0000	SD-DR220-0000	EIT06-01	EST09-01
Sample Date	10/25/06	10/25/06	10/25/06	02/11/08	02/11/08	02/11/08	02/11/08	08/27/98	08/25/98	08/25/98	09/26/97	09/25/97
Depth (ft bgs)	0 to 0.33	0 to 0.33	0 to 0.33	0 to 0.33	0 to 0.33	0 to 0.33	0 to 0.33	0 to 0.33	0 to 0.33	0 to 0.33	0 to 0.33	0 to 0.33
n-Butylbenzene								2.3 U				
n-Propylbenzene								2.3 U				
o-Xylene								2.3 U				
p-Cymene								2.3 U				
Pentachloroethane								2.3 U				
sec-Butylbenzene								2.3 U				
Styrene								2.3 U				
tert-Butyl methyl ether								2.3 U				
tert-Butylbenzene								2.3 U				
Tetrachloroethene								2.3 U				
Toluene								2.3 U				
Total xylenes								4.6 U				
trans-1,2-Dichloroethene								2.3 U				
trans-1,3-Dichloropropene								4.3 U				
trans-1,4-Dichloro-2-butene								11.5 U				
Trichloroethene								2.3 U				
Trichlorofluoromethane								2.3 U				
Vinyl chloride								2.3 U				
Dioxin/furan (ng/kg dw)												
1,2,3,4,6,7,8-HpCDD	160							220				
1,2,3,4,6,7,8-HpCDF	40							42				
1,2,3,4,7,8,9-HpCDF	3.2 U							7.6 J				
1,2,3,4,7,8-HxCDD	2.4 U							3.0 U				
1,2,3,4,7,8-HxCDF	6.9 J							9				
1,2,3,6,7,8-HxCDD	6.8 J							12				
1,2,3,6,7,8-HxCDF	4 U							3.7 U				
1,2,3,7,8,9-HxCDD	5.8 J							7.9				
1,2,3,7,8,9-HxCDF	0.31 U							0.41 U				
1,2,3,7,8-PeCDD	1.7 U							2.3 U				
1,2,3,7,8-PeCDF	3.8 U							1.7 U				
2,3,4,6,7,8-HxCDF	3.7 U							1.9 U				
2,3,4,7,8-PeCDF	5.2 J							3.0 U				
2,3,7,8-TCDD	0.45 U							2				
2,3,7,8-TCDF	6.3							4.3				
Dioxin/furan TEQ - mammal (half DL)	8.30 J							11 J				
OCDD	1,400							1,800				
OCDF	90							93				
Total HpCDD								510				
Total HpCDF								140				
Total HxCDD								80				
Total HxCDF								60				
Total PeCDD								6.7 U				
Total PeCDF								38				
Total TCDD								14				
Total TCDF								45				

TABLE A-1
SURFACE SEDIMENT ANALYTICAL RESULTS
BOEING ISAACSON-THOMPSON SITE
TUKWILA, WASHINGTON

Location	EST142	EST143	EST147	EST148	EST157	EST158	EST159	EST160	EST161	EST162	LDW-SS112	LDW-SS114
Sample ID	EST09-02	EST09-03	EST10-01	EST10-02	EST11-07	EST11-08	EST11-09	EST11-10	EST11-11	EST11-12	LDW-SS112-010	LDW-SS114-010
Sample Date	10/24/97	09/25/97	09/25/97	11/12/97	09/24/97	09/24/97	09/24/97	09/25/97	11/13/97	09/25/97	01/19/05	01/20/05
Depth (ft bgs)	0 to 0.33	0 to 0.33	0 to 0.33	0 to 0.33	0 to 0.33	0 to 0.33	0 to 0.33	0 to 0.33	0 to 0.33	0 to 0.33	0 to 0.33	0 to 0.33
Conventionals												
Ammonia (mg-N/kg dw)											4.99	2.71
Percent moisture (%ww)												
Total organic carbon (%dw)	1.64	1.38	1.3	2.23	1.79	1.52	1.19	1.59	0.85	1.46	1.82	1.53
Total solids (%ww)											53	57.98
Total solids (preserved) (%ww)											55	55.15
Total sulfides (mg/kg dw)											6.2 UJ	5.8 UJ
Grain size (%dw)												
Fractional % >9525 microns												
Fractional % phi >-1 (>2000 microns)											2.4	2.1
Fractional % phi >-3 (>8000 microns)												
Fractional % phi 0-1 (500-1000 microns)											4.8	4
Fractional % phi -1-0 (1000-2000 microns)											2	2.1
Fractional % phi 10+ (<0.98 micron)											3.4	3.3
Fractional % phi 1-2 (250-500 microns)											20	13.3
Fractional % phi -2-(-1) (2000-4000 microns)												
Fractional % phi 2-3 (125-250 microns)											18.1	16.8
Fractional % phi -3-(-2) (4000-8000 microns)												
Fractional % phi 3-4 (62.5-125 microns)											14.6	16.6
Fractional % phi 4-5 (31.2-62.5 microns)											11	14.6
Fractional % phi 5-6 (15.6-31.2 microns)											8.5	11.2
Fractional % phi 6-7 (7.8-15.6 microns)											6.7	7.2
Fractional % phi 7-8 (3.9-7.8 microns)											3.8	4.1
Fractional % phi 8-9 (1.95-3.9 microns)											2.7	2.8
Fractional % phi 9-10 (0.98-1.95 microns)											2	1.8
Fractional % Sieve 3/8-inch (4750-9525 microns)												
Total clay	17.07	12.16	13.6	15.27	18.81	17.69	7.98	17.29	8.62	15.26	8.1	7.9
Total fines (percent silt+clay)											38.1	45
Total gravel	0.01 U	0.01	0.37	0.73	0.01 U	0.04	1.86	0.01 U	2.81	0.01 U	2.4	2.1
Total sand	8.73	46.41	39.01	39.36	7.83	13.7	69.96	10.94	61.37	25.92	59.5	52.8
Total silt	74.2	41.42	47.02	44.64	73.35	68.57	20.2	71.77	27.21	58.82	30	37.1
Metals (mg/kg dw)												
Aluminum												
Antimony											0.4 UJ	0.3 UJ
Arsenic											481	1,100
Barium												
Beryllium												
Cadmium											0.7	1.6 J
Calcium												
Chromium											62.4	72.8 J
Cobalt											7.6	9
Copper											77.7	58.5
Iron												
Lead											82	110
Magnesium												
Manganese												
Mercury											0.08 U	0.12
Molybdenum											3.5	3.4
Nickel											25	26
Potassium												
Selenium											9 U	8 U
Silver											0.5	0.8
Sodium												
Thallium											0.4 U	0.3 U

TABLE A-1
SURFACE SEDIMENT ANALYTICAL RESULTS
BOEING ISAACSON-THOMPSON SITE
TUKWILA, WASHINGTON

Location	EST142	EST143	EST147	EST148	EST157	EST158	EST159	EST160	EST161	EST162	LDW-SS112	LDW-SS114
Sample ID	EST09-02	EST09-03	EST10-01	EST10-02	EST11-07	EST11-08	EST11-09	EST11-10	EST11-11	EST11-12	LDW-SS112-010	LDW-SS114-010
Sample Date	10/24/97	09/25/97	09/25/97	11/12/97	09/24/97	09/24/97	09/24/97	09/25/97	11/13/97	09/25/97	01/19/05	01/20/05
Depth (ft bgs)	0 to 0.33	0 to 0.33	0 to 0.33	0 to 0.33	0 to 0.33	0 to 0.33	0 to 0.33	0 to 0.33	0 to 0.33	0 to 0.33	0 to 0.33	0 to 0.33
Tin												
Vanadium											71.9	72.6
Zinc											206	230
PAHs (ug/kg dw)												
1-Methylnaphthalene												
2-Chloronaphthalene											98 U	130 U
2-Methylnaphthalene											98 U	130 U
Acenaphthene											98 U	140
Acenaphthylene											98 U	130 U
Anthracene											200	250
Benzo(a)anthracene											930	1,100
Benzo(a)pyrene											1,100	1,300
Benzo(b)fluoranthene											1,400	1,300
Benzo(g,h,i)perylene											370	460
Benzo(k)fluoranthene											1,200	1,200
Chrysene											1,600	1,900
cPAHs - mammal - half DL											1,500	1,800 J
Dibenzo(a,h)anthracene											98 U	86 J
Dibenzofuran											98 U	130 U
Fluoranthene											3,400	3,100
Fluorene											98 U	130
Indeno(1,2,3-cd)pyrene											410	560
Naphthalene											98 U	130 U
Phenanthrene											1,200	1,600
Pyrene											2,000	2,500
Total benzofluoranthenes											2,600	2,500
Total HPAHs											12,400	13,500 J
Total LPAHs											1,400	2,100
Total PAHs											13,800	15,600 J
Other SVOCs (ug/kg dw)												
1,2,4-Trichlorobenzene											98 U	130 U
1,2-Dichlorobenzene											98 U	130 U
1,3-Dichlorobenzene											98 U	130 U
1,4-Dichlorobenzene											98 U	130 U
2,4,5-Trichlorophenol											490 U	640 U
2,4,6-Trichlorophenol											490 U	640 U
2,4-Dichlorophenol											490 U	640 U
2,4-Dimethylphenol											98 U	130 U
2,4-Dinitrophenol											980 U	1,300 U
2,4-Dinitrotoluene											490 U	640 U
2,6-Dinitrotoluene											490 U	640 U
2-Chlorophenol											98 U	130 U
2-Methylphenol											98 U	130 U
2-Nitroaniline											490 U	640 U
2-Nitrophenol											490 U	640 U
3,3'-Dichlorobenzidine											490 U	640 U
3-Nitroaniline											490 U	640 U
4,6-Dinitro-o-cresol											980 U	1,300 U
4-Bromophenyl phenyl ether											98 U	130 U
4-Chloro-3-methylphenol											490 U	640 U
4-Chloroaniline											490 U	640 U
4-Chlorophenyl phenyl ether											98 U	130 U
4-Methylphenol											98 U	130 U
4-Nitroaniline											490 U	640 U

TABLE A-1
SURFACE SEDIMENT ANALYTICAL RESULTS
BOEING ISAACSON-THOMPSON SITE
TUKWILA, WASHINGTON

Location	EST142	EST143	EST147	EST148	EST157	EST158	EST159	EST160	EST161	EST162	LDW-SS112	LDW-SS114
Sample ID	EST09-02	EST09-03	EST10-01	EST10-02	EST11-07	EST11-08	EST11-09	EST11-10	EST11-11	EST11-12	LDW-SS112-010	LDW-SS114-010
Sample Date	10/24/97	09/25/97	09/25/97	11/12/97	09/24/97	09/24/97	09/24/97	09/25/97	11/13/97	09/25/97	01/19/05	01/20/05
Depth (ft bgs)	0 to 0.33	0 to 0.33	0 to 0.33	0 to 0.33	0 to 0.33	0 to 0.33	0 to 0.33	0 to 0.33	0 to 0.33	0 to 0.33	0 to 0.33	0 to 0.33
4-Nitrophenol											490 U	640 U
Aniline											98 U	130 U
Benzoic acid											980 U	1,300 U
Benzyl alcohol											98 U	130 U
bis(2-chloroethoxy)methane											98 U	130 U
bis(2-chloroethyl)ether											98 U	130 U
bis(2-chloroisopropyl)ether											98 U	130 U
Carbazole											220	240
Hexachlorobenzene											98 U	130 U
Hexachlorobutadiene											98 U	130 U
Hexachlorocyclopentadiene											490 U	640 U
Hexachloroethane											98 U	130 U
Isophorone											98 U	130 U
Nitrobenzene											98 U	130 U
n-Nitrosodimethylamine											490 U	130 U
n-Nitroso-di-n-propylamine											490 U	640 U
n-Nitrosodiphenylamine											98 U	130 U
Pentachlorophenol											490 U	640 U
Phenol											98 U	130 U
PCBs (ug/kg dw)												
Aroclor-1016											34 U	110 U
Aroclor-1221											34 U	110 U
Aroclor-1232											34 U	110 U
Aroclor-1242											34 U	110 U
Aroclor-1248											76	210 U
Aroclor-1254											240	540
Aroclor-1260											150	280
Aroclor-1262												
Aroclor-1268												
Total PCBs	87 J	390	690 J	670 J	41 J	74 J	78 J	32 J	160	230	470	820
Total PCBs + PCTs	97	440	1,400	740	49	86	110	45	190	250		
Total PCTs	10	53	710	73	7.8 J	12	32	13	33	23		
PCBs (ng/kg dw)												
PCB TEQ - mammal (half DL)												
PCB-018												
PCB-028												
PCB-044												
PCB-055												
PCB-066												
PCB-077	700 U	590 U	910 U	1,400	440 U	480 U	350 U	700 U	310 U	440 U		
PCB-081												
PCB-101	25,000 J	100,000 J	150,000 J	150,000 J	13,000 J	22,000 J	24,000 J	12,000 J	53,000 J	68,000 J		
PCB-105	3,200	14,000	40,000	36,000 J	1,700	3,400	3,300	1,700	6,000 J	7,200		
PCB-110	9,300	45,000	130,000	47,000	3,600 U	6,600 U	11,000	3,800 U	17,000	22,000		
PCB-114												
PCB-118	7,700	31,000	93,000	41,000	4,200	6,200	7,700	3,500	14,000	18,000		
PCB-123												
PCB-126	630 U	530 U	830 U	360 U	400 U	430 U	310 U	630 U	290 U	390 U		
PCB-128	3,300 J	11,000 J	100,000 J	20,000 J	2,000 J	2,500 J	6,200 J	2,400 J	6,800 J	6,000 J		
PCB-138	6,400	28,000	69,000	36,000	380 U	5,300	9,300	2,900	14,000	14,000		
PCB-153	17,000 J	75,000 J	130,000 J	110,000 J		15,000 J	20,000 J	8,400 J	33,000 J	44,000 J		
PCB-156	550 U	3,300	7,400	5,000	350 U	380 U	280 U	560 U	250 U	1,000		
PCB-157	490 U	410 U	640 U	280 U	310 U	340 U	240 U	490 U	220 U	310 U		
PCB-167												

TABLE A-1
SURFACE SEDIMENT ANALYTICAL RESULTS
BOEING ISAACSON-THOMPSON SITE
TUKWILA, WASHINGTON

Location	EST142	EST143	EST147	EST148	EST157	EST158	EST159	EST160	EST161	EST162	LDW-SS112	LDW-SS114
Sample ID	EST09-02	EST09-03	EST10-01	EST10-02	EST11-07	EST11-08	EST11-09	EST11-10	EST11-11	EST11-12	LDW-SS112-010	LDW-SS114-010
Sample Date	10/24/97	09/25/97	09/25/97	11/12/97	09/24/97	09/24/97	09/24/97	09/25/97	11/13/97	09/25/97	01/19/05	01/20/05
Depth (ft bgs)	0 to 0.33	0 to 0.33	0 to 0.33	0 to 0.33	0 to 0.33	0 to 0.33	0 to 0.33	0 to 0.33	0 to 0.33	0 to 0.33	0 to 0.33	0 to 0.33
PCB-169	1,600 U	1,300 U	2,000 U	870 U	980 U	1,100 U	770 U	1,600 U	680 U	970 U		
PCB-170	2,300	8,000	54,000	20,000	1,100	3,300	4,300	2,000	5,600	6,500		
PCB-180	3,800	9,400	110,000	29,000	3,200 U	4,900 U	6,300	2,700 U	9,100	12,000		
PCB-187												
PCB-189	710 U	600 U	930 U	400 U	450 U	490 U	350 U	710 U	310 U	440 U		
PCB-195												
PCB-206												
PCB-209												
Phthalates (ug/kg dw)												
Bis(2-ethylhexyl)phthalate											320	1,200
Butyl benzyl phthalate											220	130 U
Diethyl phthalate											110	130 U
Dimethyl phthalate											98 U	130 U
Di-n-butyl phthalate											98 U	83 J
Di-n-octyl phthalate											98 U	130 U
Organometals (ug/kg dw)												
Dibutyltin as ion												
Monobutyltin as ion												
Tetrabutyltin as ion												
Tributyltin as ion												
Pesticides (ug/kg dw)												
2,4'-DDD												
2,4'-DDE												
2,4'-DDT												
4,4'-DDD												
4,4'-DDE												
4,4'-DDT												
Aldrin												
alpha-BHC												
alpha-Chlordane												
alpha-Endosulfan												
beta-BHC												
beta-Chlordane												
beta-Endosulfan												
cis-Nonachlor												
delta-BHC												
Dieldrin												
Endosulfan sulfate												
Endrin												
Endrin aldehyde												
Endrin ketone												
gamma-BHC												
gamma-Chlordane												
Heptachlor												
Heptachlor epoxide												
Methoxychlor												
Mirex												
Oxychlordane												
Total aldrin/dieldrin												
Total chlordane												
Total DDTs												
Toxaphene												
trans-Nonachlor												
VOCs (ug/kg dw)												

TABLE A-1
SURFACE SEDIMENT ANALYTICAL RESULTS
BOEING ISAACSON-THOMPSON SITE
TUKWILA, WASHINGTON

Location	EST142	EST143	EST147	EST148	EST157	EST158	EST159	EST160	EST161	EST162	LDW-SS112	LDW-SS114
Sample ID	EST09-02	EST09-03	EST10-01	EST10-02	EST11-07	EST11-08	EST11-09	EST11-10	EST11-11	EST11-12	LDW-SS112-010	LDW-SS114-010
Sample Date	10/24/97	09/25/97	09/25/97	11/12/97	09/24/97	09/24/97	09/24/97	09/25/97	11/13/97	09/25/97	01/19/05	01/20/05
Depth (ft bgs)	0 to 0.33	0 to 0.33	0 to 0.33	0 to 0.33	0 to 0.33	0 to 0.33	0 to 0.33	0 to 0.33	0 to 0.33	0 to 0.33	0 to 0.33	0 to 0.33
1,1,1,2-Tetrachloroethane												
1,1,1-Trichloroethane												
1,1,2,2-Tetrachloroethane												
1,1,2-Trichloroethane												
1,1,2-Trichlorotrifluoroethane												
1,1-Dichloroacetone												
1,1-Dichloroethane												
1,1-Dichloroethene												
1,1-Dichloropropene												
1,2,3-Trichlorobenzene												
1,2,3-Trichloropropane												
1,2,4-Trimethylbenzene												
1,2-Dibromo-3-chloropropane												
1,2-Dibromoethane (EDB)												
1,2-Dichloroethane												
1,2-Dichloropropane												
1,3,5-Trimethylbenzene												
1,3-Dichloropropane												
1-Chlorobutane												
2,2-Dichloropropane												
2-Chlorotoluene												
2-Hexanone												
2-Nitropropane												
4-Chlorotoluene												
Acetone												
Allyl chloride												
Benzene												
Bromobenzene												
Bromochloromethane												
Bromodichloromethane												
Bromoform												
Bromomethane												
Carbon disulfide												
Carbon tetrachloride												
Chlorobenzene												
Chloroethane												
Chloroform												
Chloromethane												
cis-1,2-Dichloroethene												
cis-1,3-Dichloropropene												
Dibromochloromethane												
Dibromomethane												
Dichloromethane												
Diethyl ether												
Ethyl methacrylate												
Ethylbenzene												
Iodomethane												
Isopropylbenzene												
m,p-Xylene												
Methacrylonitrile												
Methyl acrylate												
Methyl ethyl ketone												
Methyl isobutyl ketone												
Methyl methacrylate												

TABLE A-1
SURFACE SEDIMENT ANALYTICAL RESULTS
BOEING ISAACSON-THOMPSON SITE
TUKWILA, WASHINGTON

Location	EST142	EST143	EST147	EST148	EST157	EST158	EST159	EST160	EST161	EST162	LDW-SS112	LDW-SS114
Sample ID	EST09-02	EST09-03	EST10-01	EST10-02	EST11-07	EST11-08	EST11-09	EST11-10	EST11-11	EST11-12	LDW-SS112-010	LDW-SS114-010
Sample Date	10/24/97	09/25/97	09/25/97	11/12/97	09/24/97	09/24/97	09/24/97	09/25/97	11/13/97	09/25/97	01/19/05	01/20/05
Depth (ft bgs)	0 to 0.33	0 to 0.33	0 to 0.33	0 to 0.33	0 to 0.33	0 to 0.33	0 to 0.33	0 to 0.33	0 to 0.33	0 to 0.33	0 to 0.33	0 to 0.33
n-Butylbenzene												
n-Propylbenzene												
o-Xylene												
p-Cymene												
Pentachloroethane												
sec-Butylbenzene												
Styrene												
tert-Butyl methyl ether												
tert-Butylbenzene												
Tetrachloroethene												
Toluene												
Total xylenes												
trans-1,2-Dichloroethene												
trans-1,3-Dichloropropene												
trans-1,4-Dichloro-2-butene												
Trichloroethene												
Trichlorofluoromethane												
Vinyl chloride												
Dioxin/furan (ng/kg dw)												
1,2,3,4,6,7,8-HpCDD												
1,2,3,4,6,7,8-HpCDF												
1,2,3,4,7,8,9-HpCDF												
1,2,3,4,7,8-HxCDD												
1,2,3,4,7,8-HxCDF												
1,2,3,6,7,8-HxCDD												
1,2,3,6,7,8-HxCDF												
1,2,3,7,8,9-HxCDD												
1,2,3,7,8,9-HxCDF												
1,2,3,7,8-PeCDD												
1,2,3,7,8-PeCDF												
2,3,4,6,7,8-HxCDF												
2,3,4,7,8-PeCDF												
2,3,7,8-TCDD												
2,3,7,8-TCDF												
Dioxin/furan TEQ - mammal (half DL)												
OCDD												
OCDF												
Total HpCDD												
Total HpCDF												
Total HxCDD												
Total HxCDF												
Total PeCDD												
Total PeCDF												
Total TCDD												
Total TCDF												

TABLE A-1
SURFACE SEDIMENT ANALYTICAL RESULTS
BOEING ISAACSON-THOMPSON SITE
TUKWILA, WASHINGTON

Location	LDW-SS115	LDW-SS116	LDW-SS118	LDW-SS119	LDW-SS157	LDW-SS158	LDW-SS159	LDW-SS338	LDW-SS541	R22SD	R23SD	R26SD
Sample ID	LDW-SS115-010	LDW-SS116-010	LDW-SS118-010	LDW-SS119-010	LDW-SS157-010	LDW-SS158-010	LDW-SS159-010	LDW-SS338-010	LDW-SS541-010	SD0001	SD0020	SD0002
Sample Date	01/25/05	01/20/05	01/20/05	01/19/05	03/16/05	03/16/05	03/16/05	10/03/06	12/17/09	10/08/97	10/11/97	10/09/97
Depth (ft bgs)	0 to 0.33	0 to 0.33	0 to 0.33	0 to 0.33	0 to 0.33	0 to 0.33	0 to 0.33	0 to 0.33	0 to 0.33	0 to 0.33	0 to 0.33	0 to 0.33
Conventionals												
Ammonia (mg-N/kg dw)	4.61	4.81	11.3	6.41	4.13	4.32	7.86					
Percent moisture (%ww)												
Total organic carbon (%dw)	1.92	1.34	1.84	1.5	3.1	1.96	2.78	1.99	1.1	1.4	1.7	1.1
Total solids (%ww)	64.8	64.1	46.9	54.1	55.2	54.5	42.7	48.5	69.9	49.1	48.9	50.4
Total solids (preserved) (%ww)	54.8	57.6	42.4	50.9	54.6	61.6	61.6					
Total sulfides (mg/kg dw)	3.7 U	6.5 UJ	480 J	7.7 UJ	5.9 U	4.9 UJ	5.1 J					
Grain size (%dw)												
Fractional % >9525 microns												
Fractional % phi >-1 (>2000 microns)	53.3	1.3	0.3	2.8	3.8	4.4	0.3	0.6	0.1			
Fractional % phi >-3 (>8000 microns)										4		
Fractional % phi 0-1 (500-1000 microns)	4.8	6.5	0.4	2.8	9.8	7.3	4.5	0.9	1.4	7	6	2
Fractional % phi -1-0 (1000-2000 microns)	3	1	0.3	0.8	3.8	2.7	0.9	1	0.3	4	1	1
Fractional % phi 10+ (<0.98 micron)	1.1	1.8	8.4	3.1	3.4	4.5	3.3	6.9	2.5	4	3	4
Fractional % phi 1-2 (250-500 microns)	15	22.4	1.9	8.6	29	14.7	15.1	2.6	19.4	10	19	8
Fractional % phi -2-(-1) (2000-4000 microns)										4	2	1
Fractional % phi 2-3 (125-250 microns)	9	21.2	4.1	15.9	19.3	10.5	24.3	9.4	48.5	8	12	11
Fractional % phi -3-(-2) (4000-8000 microns)										2	1	1
Fractional % phi 3-4 (62.5-125 microns)	2.8	15.3	16.8	21	8.3	13.4	16.6	16.8	9	8	8	15
Fractional % phi 4-5 (31.2-62.5 microns)	0.6	10.3	23.4	13.3	5.7	13.4	9.7	14.6	7.1	20	14	21
Fractional % phi 5-6 (15.6-31.2 microns)	3.5	7.8	18.8	13.2	5	11.6	9.6	17.4	4	10	14	18
Fractional % phi 6-7 (7.8-15.6 microns)	2.8	5.3	11.6	8	4.3	7.9	6.7	14.3	3.3	9	10	10
Fractional % phi 7-8 (3.9-7.8 microns)	2	3.1	7.1	5.2	3.6	4.9	4.8	8.2	2.4	5	5	5
Fractional % phi 8-9 (1.95-3.9 microns)	1.2	2.4	4.1	3.1	2.5	2.8	2.7	4	1.1	3	3	4
Fractional % phi 9-10 (0.98-1.95 microns)	0.8	1.8	2.8	2.1	1.5	1.7	1.7	3.3	1	2	2	2
Fractional % Sieve 3/8-inch (4750-9525 microns)												
Total clay	3.1	6	15.3	8.3	7.4	9	7.7	14.2	4.6	9	8	10
Total fines (percent silt+clay)	12	32.5	76.2	48	26	46.8	38.5	68.7	21.4	53	51	60
Total gravel	53.3	1.3	0.3	2.8	3.8	4.4	0.3	0.6	0.1	10	3	2
Total sand	34.6	66.4	23.5	49.1	70.2	48.6	61.4	30.7	78.6	37	46	37
Total silt	8.9	26.5	60.9	39.7	18.6	37.8	30.8	54.5	16.8	44	43	50
Metals (mg/kg dw)												
Aluminum												
Antimony	0.3 UJ	0.3 UJ	0.4 UJ	0.3 UJ	0.4 UJ	0.3 UJ	0.3 UJ	0.4 UJ				
Arsenic	44.4	9.6	13	10.9	21.1	20.5	10	8.7		79.4	36.2	15.8
Barium												
Beryllium												
Cadmium	1.1	0.3 UJ	0.4 UJ	0.6	1.6	0.7	0.4	0.4 U		1.4 J	1.7 J	0.4 UJ
Calcium												
Chromium	55	26.2 J	29 J	37.6	69	174	29.3	26		76 J	53 J	28 J
Cobalt	11	7.6	8.5	8.3	9	7.7	6.9	8.3				
Copper	99.7	38.5	47.4	46.8	74.7 J	52.1 J	37.0 J	43		53	56	40
Iron												
Lead	98	30	28	71	148	51	36	22		78	221	28
Magnesium												
Manganese												
Mercury	0.07	0.07	0.12	0.16	0.12 J	0.10 J	0.10 J	0.13		0.11	0.1	0.1
Molybdenum	4	1.2	1	1.7	6	7.6	1.6	0.8				
Nickel	35	20	20	19	37	48	19	22		30	35	23
Potassium												
Selenium	20 U	8 U	10 U	9 U	20 U	9 U	8 U	1 U				
Silver	1	0.5 U	0.6 U	0.7	2	0.6	0.5 U	0.4 U		1.8	2.3	0.7
Sodium												
Thallium	0.3 U	0.3 U	0.4 U	0.3 U	0.4 U	0.3 U	0.3 U	0.4 U				

TABLE A-1
SURFACE SEDIMENT ANALYTICAL RESULTS
BOEING ISAACSON-THOMPSON SITE
TUKWILA, WASHINGTON

Location	LDW-SS115	LDW-SS116	LDW-SS118	LDW-SS119	LDW-SS157	LDW-SS158	LDW-SS159	LDW-SS338	LDW-SS541	R22SD	R23SD	R26SD
Sample ID	LDW-SS115-010	LDW-SS116-010	LDW-SS118-010	LDW-SS119-010	LDW-SS157-010	LDW-SS158-010	LDW-SS159-010	LDW-SS338-010	LDW-SS541-010	SD0001	SD0020	SD0002
Sample Date	01/25/05	01/20/05	01/20/05	01/19/05	03/16/05	03/16/05	03/16/05	10/03/06	12/17/09	10/08/97	10/11/97	10/09/97
Depth (ft bgs)	0 to 0.33	0 to 0.33	0 to 0.33	0 to 0.33	0 to 0.33	0 to 0.33	0 to 0.33	0 to 0.33	0 to 0.33	0 to 0.33	0 to 0.33	0 to 0.33
Tin												
Vanadium	81	61.3	67.6	58.8	67	65.7	53.5	57.5				
Zinc	343	92.8	103	115	248	151	99	95		293	188	91
PAHs (ug/kg dw)												
1-Methylnaphthalene								62 U				
2-Chloronaphthalene	200 U	99 U	99 U	96 U	58 U	59 U	58 U	62 U		20 U	20 U	20 U
2-Methylnaphthalene	200 U	99 U	99 U	96 U	58 U	59 U	58 U	62 U		36	110	20 U
Acenaphthene	150 J	99 U	99 U	96 U	86	59 U	58 U	62 U		210	390	20 U
Acenaphthylene	200 U	99 U	99 U	96 U	34 J	59 U	58 U	62 U		20 U	22	20 U
Anthracene	390	51 J	99 U	96 U	270	63	90	62 U		630	1,000	52
Benzo(a)anthracene	1,500	310	130	160	1,100	53	410	82		2,100	3,900	230
Benzo(a)pyrene	1,700	390	140	180	1,300	58	360	79		2,400	4,500	290
Benzo(b)fluoranthene	1,900	560	210	230	1,900	58	740	120		2,100	4,600	330
Benzo(g,h,i)perylene	490	120	71 J	96 U	510	140	120	58 J		1,400	3,100	190
Benzo(k)fluoranthene	1,700	360	120	160	1,500	310	600	84		2,500	4,200	310
Chrysene	2,500	660	270	350	1,500	320	780	120		2,800	5,300	370
cPAHs - mammal - half DL	2,400	550	210	260	1,900	140 J	570	120 J		3,500	6,600	430
Dibenzo(a,h)anthracene	240	99 U	99 U	96 U	79	54 J	58 U	8		510	1,200	83
Dibenzofuran	200 U	99 U	99 U	96 U	59	59 U	58 U	62 U		140	300	20 U
Fluoranthene	5,200	1,000	490	510	3,400	610	2,100	170		5,600	11,000	590
Fluorene	180 J	99 U	99 U	96 U	99	59 U	40 J	62 U		260	500	25
Indeno(1,2,3-cd)pyrene	600	150	46	63	670	170	180	51 J		1,500	3,200	200
Naphthalene	200 U	99 U	99 U	96 U	40 J	59 U	58 U	62 U		43	100	20 U
Phenanthrene	2,400	280	140	160	1,400	310	570	54 J		2,900	6,600	330
Pyrene	3,200	780 J	360	380	2,200	500	1,600	160		4,800	9,600	660
Total benzofluoranthenes	3,600	920	330	390	3,400	370	1,340	200		4,600	8,800	640
Total HPAHs	19,000	4,300 J	1,840 J	2,030	14,200	2,270 J	6,900	930 J		25,700	51,000	3,250
Total LPAHs	3,100 J	330 J	140	160	1,900 J	370	700 J	54 J		4,000	8,600	410
Total PAHs	22,200 J	4,700 J	1,980 J	2,190	16,100 J	2,650 J	7,600 J	990 J		29,800	59,000	3,660
Other SVOCs (ug/kg dw)												
1,2,4-Trichlorobenzene	200 U	6.6 U	6.6 U	6.6 U	6.4 U	6.4 U	6.6 U	6.2 U		20 U	20 U	20 U
1,2-Dichlorobenzene	200 U	6.6 U	6.6 U	6.6 U	6.4 U	6.4 U	6.6 U	6.2 U		20 U	20 U	20 U
1,3-Dichlorobenzene	200 U	99 U	99 U	96 U	58 U	59 U	58 U	62 U		20 U	20 U	20 U
1,4-Dichlorobenzene	200 U	6.6 U	6.6 U	6.6 U	6.4 U	6.4 U	6.6 U	6.2 U		20 UJ	20 UJ	20 UJ
2,4,5-Trichlorophenol	980 U	490 U	500 U	480 U	290 U	290 U	290 U	310 U		98 U	2,000 U	99 U
2,4,6-Trichlorophenol	980 U	490 U	500 U	480 U	290 U	290 U	290 U	310 U		98 U	2,000 U	99 U
2,4-Dichlorophenol	980 U	490 U	500 U	480 U	290 U	290 U	290 U	310 U		59 U	1,200 U	59 U
2,4-Dimethylphenol	200 U	6.6 U	6.6 U	6.6 U	6.4 U	6.4 U	6.6 U	6.2 U		20 U	20 U	20 U
2,4-Dinitrophenol	2,000 U	990 U	990 U	960 U	580 U	590 U	580 U	620 U		200 UJ	200 UJ	200 UJ
2,4-Dinitrotoluene	980 U	490 U	500 U	480 U	290 U	290 U	290 U	310 U		98 U	99 U	99 U
2,6-Dinitrotoluene	980 U	490 U	500 U	480 U	290 U	290 U	290 U	310 U		98 U	99 U	99 U
2-Chlorophenol	200 U	99 U	99 U	96 U	58 U	59 U	58 U	62 U		20 U	20 U	20 U
2-Methylphenol	200 U	6.6 U	6.6 U	6.6 U	6.4 U	6.4 U	6.6 U	6.2 U		20 U	20 U	20 U
2-Nitroaniline	980 U	490 U	500 U	480 U	290 U	290 U	290 U	310 U		98 U	2,000 U	99 U
2-Nitrophenol	980 U	490 U	500 U	480 U	290 U	290 U	290 U	310 U		98 U	2,000 U	99 U
3,3'-Dichlorobenzidine	980 U	490 U	500 U	480 U	290 U	290 U	290 U	310 U		98 U	99 U	99 U
3-Nitroaniline	980 U	490 U	500 U	480 U	290 U	290 U	290 U	310 U		120 U	120 U	120 U
4,6-Dinitro-o-cresol	2,000 U	990 U	990 U	960 U	580 U	590 U	580 U	620 U		200 UJ	200 UJ	200 UJ
4-Bromophenyl phenyl ether	200 U	99 U	99 U	96 U	58 U	59 U	58 U	62 U		20 U	20 U	20 U
4-Chloro-3-methylphenol	980 U	490 U	500 U	480 U	290 U	290 U	290 U	310 U		39 U	40 U	40 U
4-Chloroaniline	980 U	490 U	500 U	480 U	290 U	290 U	290 U	310 U		59 U	60 U	59 U
4-Chlorophenyl phenyl ether	200 U	99 U	99 U	96 U	58 U	59 U	58 U	62 U		20 U	20 U	20 U
4-Methylphenol	200 U	99 U	99 U	96 U	58 U	59 U	58 U	62 U		20 U	51	47
4-Nitroaniline	980 U	490 U	500 U	480 U	290 U	290 U	290 U	310 U		98 UJ	99 UJ	99 UJ

TABLE A-1
SURFACE SEDIMENT ANALYTICAL RESULTS
BOEING ISAACSON-THOMPSON SITE
TUKWILA, WASHINGTON

Location	LDW-SS115	LDW-SS116	LDW-SS118	LDW-SS119	LDW-SS157	LDW-SS158	LDW-SS159	LDW-SS338	LDW-SS541	R22SD	R23SD	R26SD
Sample ID	LDW-SS115-010	LDW-SS116-010	LDW-SS118-010	LDW-SS119-010	LDW-SS157-010	LDW-SS158-010	LDW-SS159-010	LDW-SS338-010	LDW-SS541-010	SD0001	SD0020	SD0002
Sample Date	01/25/05	01/20/05	01/20/05	01/19/05	03/16/05	03/16/05	03/16/05	10/03/06	12/17/09	10/08/97	10/11/97	10/09/97
Depth (ft bgs)	0 to 0.33	0 to 0.33	0 to 0.33	0 to 0.33	0 to 0.33	0 to 0.33	0 to 0.33	0 to 0.33	0 to 0.33	0 to 0.33	0 to 0.33	0 to 0.33
4-Nitrophenol	980 U	490 U	500 U	480 U	290 U	290 U	290 U	310 U		98 UJ	99 UJ	99 UJ
Aniline	200 U	99 U	99 U	96 U	58 U	59 U	58 U	62 UJ				
Benzoic acid	2,000 U	66 U	84	130	770	64 U	66 U	620 U		200 UJ	200 UJ	200 UJ
Benzyl alcohol	200 U	33 U	33 U	33 U	32 U	32 U	33 U	31 UJ		27 J	20 UJ	20 UJ
bis(2-chloroethoxy)methane	200 U	99 U	99 U	96 U	58 U	59 U	58 U	62 U		200 U	400 U	20 U
bis(2-chloroethyl)ether	200 U	99 U	99 U	96 U	58 U	59 U	58 U	62 U		39 U	40 U	40 U
bis(2-chloroisopropyl)ether	200 U	99 U	99 U	96 U	58 U	59 U	58 U	62 U		20 U	400 U	20 U
Carbazole	350	55 J	99 U	96 U	260	54 J	85			900	2,000	78
Hexachlorobenzene	0.98 U	0.98 U	6.6 U	6.6 U	6.4 U	6.4 U	6.6 U	6.2 U		1.0 U	1.3	1.2
Hexachlorobutadiene	0.98 U	0.98 U	6.6 U	6.6 U	6.4 U	6.4 U	6.6 U	6.2 U		20 U	20 U	20 U
Hexachlorocyclopentadiene	980 U	490 U	500 U	480 U	290 U	290 U	290 U	310 U		98 UJ	2,000 UJ	99 UJ
Hexachloroethane	200 U	99 U	99 U	96 U	58 U	59 U	58 U	62 U		20 U	20 U	20 U
Isophorone	200 U	99 U	99 U	96 U	58 U	59 U	58 U	62 U		20 U	20 U	20 U
Nitrobenzene	200 U	99 U	99 U	96 U	58 U	59 U	58 U	62 U		20 U	20 U	20 U
n-Nitrosodimethylamine	200 U	33 U	33 U	33 U	32 U	32 U	33 U	31 U				
n-Nitroso-di-n-propylamine	980 U	33 U	33 U	33 U	32 U	32 U	33 U	31 U		39 U	790 U	40 U
n-Nitrosodiphenylamine	200 U	6.6 U	6.6 U	6.6 U	7.1	6.4 U	8	6.2 U		20 U	20 U	20 U
Pentachlorophenol	980 U	33 UJ	33 U	33 U	32 U	32 U	33 U	31 U				
Phenol	200 U	99 U	99 U	96 U	110	59 U	58 U	62 U		40	64	48
PCBs (ug/kg dw)												
Aroclor-1016	20 U	20 U	20 U	120 U	20 U	20 U	20 U	24 U		20 U	20 U	20 U
Aroclor-1221	20 U	20 U	20 U	120 U	20 U	20 U	20 U	16 U		39 U	39 U	40 U
Aroclor-1232	20 U	20 U	20 U	120 U	39 U	20 U	39 U	32 U		20 U	20 U	20 U
Aroclor-1242	20 U	20 U	20 U	120 U	20 U	61 J	20 U	24 U		20 U	20 U	20 U
Aroclor-1248	39 U	39 UJ	20 U	180	39 U	20 U	39 U	32 U		20 U	80 UJ	20 U
Aroclor-1254	110	65 J	24	460	110	190	96	47		98	480	100
Aroclor-1260	110	53 J	20 U	240 J	150	140	77	41		84	390	63
Aroclor-1262												
Aroclor-1268												
Total PCBs	220	118 J	24	880 J	260	390 J	173	88		182	870	160
Total PCBs + PCTs												
Total PCTs												
PCBs (ng/kg dw)												
PCB TEQ - mammal (half DL)												
PCB-018												
PCB-028												
PCB-044												
PCB-055												
PCB-066												
PCB-077												
PCB-081												
PCB-101												
PCB-105												
PCB-110												
PCB-114												
PCB-118												
PCB-123												
PCB-126												
PCB-128												
PCB-138												
PCB-153												
PCB-156												
PCB-157												
PCB-167												

TABLE A-1
SURFACE SEDIMENT ANALYTICAL RESULTS
BOEING ISAACSON-THOMPSON SITE
TUKWILA, WASHINGTON

Location	LDW-SS115	LDW-SS116	LDW-SS118	LDW-SS119	LDW-SS157	LDW-SS158	LDW-SS159	LDW-SS338	LDW-SS541	R22SD	R23SD	R26SD
Sample ID	LDW-SS115-010	LDW-SS116-010	LDW-SS118-010	LDW-SS119-010	LDW-SS157-010	LDW-SS158-010	LDW-SS159-010	LDW-SS338-010	LDW-SS541-010	SD0001	SD0020	SD0002
Sample Date	01/25/05	01/20/05	01/20/05	01/19/05	03/16/05	03/16/05	03/16/05	10/03/06	12/17/09	10/08/97	10/11/97	10/09/97
Depth (ft bgs)	0 to 0.33	0 to 0.33	0 to 0.33	0 to 0.33	0 to 0.33	0 to 0.33	0 to 0.33	0 to 0.33	0 to 0.33	0 to 0.33	0 to 0.33	0 to 0.33
PCB-169												
PCB-170												
PCB-180												
PCB-187												
PCB-189												
PCB-195												
PCB-206												
PCB-209												
Phthalates (ug/kg dw)												
Bis(2-ethylhexyl)phthalate	330	240	240	280	1,200	510	190	180		690	1,400	370
Butyl benzyl phthalate	200 U	63 J	25	140	200	78	24	17		140 UJ	200	110 J
Diethyl phthalate	200 U	7.3 U	8.6	110	7.7 U	6.4 U	6.6 U	62 U		20 U	20 U	20 U
Dimethyl phthalate	200 U	8.6	7.3	37	6.4 U	6.4 U	30	9.3		26	200	25
Di-n-butyl phthalate	200 U	99 U	99 U	96 U	91	59 U	58 U	32 J		21	43	64
Di-n-octyl phthalate	200 U	99 U	99 U	96 U	58 U	59 U	58 U	62 U		20 U	20 U	20 U
Organometals (ug/kg dw)												
Dibutyltin as ion												
Monobutyltin as ion												
Tetrabutyltin as ion												
Tributyltin as ion												
Pesticides (ug/kg dw)												
2,4'-DDD	2.0 U	2.0 U										
2,4'-DDE	2.0 U	2.0 U										
2,4'-DDT	2.0 U	2.0 U										
4,4'-DDD	2.0 U	2.0 U										
4,4'-DDE	2.0 U	2.0 U										
4,4'-DDT	20 U	2.0 U										
Aldrin	0.98 U	0.98 U										
alpha-BHC	0.98 U	0.98 U										
alpha-Chlordane	0.98 U	0.98 U										
alpha-Endosulfan	0.98 U	0.98 U										
beta-BHC	0.98 U	0.98 U										
beta-Chlordane	0.98 U	0.98 U										
beta-Endosulfan	2.0 U	2.0 U										
cis-Nonachlor	15 U	2.0 U										
delta-BHC	0.98 U	0.98 U										
Dieldrin	2.0 U	2.0 U										
Endosulfan sulfate	2.0 U	2.0 U										
Endrin	2.0 U	2.0 U										
Endrin aldehyde	3.8 UJ	2.0 UJ										
Endrin ketone	2.0 U	2.0 U										
gamma-BHC	0.98 U	0.98 U										
gamma-Chlordane												
Heptachlor	0.98 U	0.98 U										
Heptachlor epoxide	11 U	0.98 U										
Methoxychlor	9.8 U	9.8 U										
Mirex	2.0 U	2.0 U										
Oxychlordane	2.0 U	2.0 U										
Total aldrin/dieldrin	2.0 U	2.0 U										
Total chlordane	15 U	2.0 U										
Total DDTs	20 U	2.0 U										
Toxaphene	98 U	98 U										
trans-Nonachlor	2.0 U	2.0 U										
VOCs (ug/kg dw)												

TABLE A-1
SURFACE SEDIMENT ANALYTICAL RESULTS
BOEING ISAACSON-THOMPSON SITE
TUKWILA, WASHINGTON

Location	LDW-SS115	LDW-SS116	LDW-SS118	LDW-SS119	LDW-SS157	LDW-SS158	LDW-SS159	LDW-SS338	LDW-SS541	R22SD	R23SD	R26SD
Sample ID	LDW-SS115-010	LDW-SS116-010	LDW-SS118-010	LDW-SS119-010	LDW-SS157-010	LDW-SS158-010	LDW-SS159-010	LDW-SS338-010	LDW-SS541-010	SD0001	SD0020	SD0002
Sample Date	01/25/05	01/20/05	01/20/05	01/19/05	03/16/05	03/16/05	03/16/05	10/03/06	12/17/09	10/08/97	10/11/97	10/09/97
Depth (ft bgs)	0 to 0.33	0 to 0.33	0 to 0.33	0 to 0.33	0 to 0.33	0 to 0.33	0 to 0.33	0 to 0.33	0 to 0.33	0 to 0.33	0 to 0.33	0 to 0.33
1,1,1,2-Tetrachloroethane												
1,1,1-Trichloroethane												
1,1,2,2-Tetrachloroethane												
1,1,2-Trichloroethane												
1,1,2-Trichlorotrifluoroethane												
1,1-Dichloroacetone												
1,1-Dichloroethane												
1,1-Dichloroethene												
1,1-Dichloropropene												
1,2,3-Trichlorobenzene												
1,2,3-Trichloropropane												
1,2,4-Trimethylbenzene												
1,2-Dibromo-3-chloropropane												
1,2-Dibromoethane (EDB)												
1,2-Dichloroethane												
1,2-Dichloropropane												
1,3,5-Trimethylbenzene												
1,3-Dichloropropane												
1-Chlorobutane												
2,2-Dichloropropane												
2-Chlorotoluene												
2-Hexanone												
2-Nitropropane												
4-Chlorotoluene												
Acetone												
Allyl chloride												
Benzene												
Bromobenzene												
Bromochloromethane												
Bromodichloromethane												
Bromoform												
Bromomethane												
Carbon disulfide												
Carbon tetrachloride												
Chlorobenzene												
Chloroethane												
Chloroform												
Chloromethane												
cis-1,2-Dichloroethene												
cis-1,3-Dichloropropene												
Dibromochloromethane												
Dibromomethane												
Dichloromethane												
Diethyl ether												
Ethyl methacrylate												
Ethylbenzene												
Iodomethane												
Isopropylbenzene												
m,p-Xylene												
Methacrylonitrile												
Methyl acrylate												
Methyl ethyl ketone												
Methyl isobutyl ketone												
Methyl methacrylate												

TABLE A-1
SURFACE SEDIMENT ANALYTICAL RESULTS
BOEING ISAACSON-THOMPSON SITE
TUKWILA, WASHINGTON

Location	LDW-SS115	LDW-SS116	LDW-SS118	LDW-SS119	LDW-SS157	LDW-SS158	LDW-SS159	LDW-SS338	LDW-SS541	R22SD	R23SD	R26SD
Sample ID	LDW-SS115-010	LDW-SS116-010	LDW-SS118-010	LDW-SS119-010	LDW-SS157-010	LDW-SS158-010	LDW-SS159-010	LDW-SS338-010	LDW-SS541-010	SD0001	SD0020	SD0002
Sample Date	01/25/05	01/20/05	01/20/05	01/19/05	03/16/05	03/16/05	03/16/05	10/03/06	12/17/09	10/08/97	10/11/97	10/09/97
Depth (ft bgs)	0 to 0.33	0 to 0.33	0 to 0.33	0 to 0.33	0 to 0.33	0 to 0.33	0 to 0.33	0 to 0.33	0 to 0.33	0 to 0.33	0 to 0.33	0 to 0.33
n-Butylbenzene												
n-Propylbenzene												
o-Xylene												
p-Cymene												
Pentachloroethane												
sec-Butylbenzene												
Styrene												
tert-Butyl methyl ether												
tert-Butylbenzene												
Tetrachloroethene												
Toluene												
Total xylenes												
trans-1,2-Dichloroethene												
trans-1,3-Dichloropropene												
trans-1,4-Dichloro-2-butene												
Trichloroethene												
Trichlorofluoromethane												
Vinyl chloride												
Dioxin/furan (ng/kg dw)												
1,2,3,4,6,7,8-HpCDD									50.7			
1,2,3,4,6,7,8-HpCDF									35.1			
1,2,3,4,7,8,9-HpCDF									3.06 J			
1,2,3,4,7,8-HxCDD									0.354 U			
1,2,3,4,7,8-HxCDF									5.57			
1,2,3,6,7,8-HxCDD									1.92 J			
1,2,3,6,7,8-HxCDF									0.906 J			
1,2,3,7,8,9-HxCDD									1.06 J			
1,2,3,7,8,9-HxCDF									0.0630 J			
1,2,3,7,8-PeCDD									0.220 J			
1,2,3,7,8-PeCDF									0.119 J			
2,3,4,6,7,8-HxCDF									0.391 J			
2,3,4,7,8-PeCDF									0.287 J			
2,3,7,8-TCDD									0.126 J			
2,3,7,8-TCDF									0.269 J			
Dioxin/furan TEQ - mammal (half DL)									2.53 J			
OCDD									496			
OCDF									70.3			
Total HpCDD									105			
Total HpCDF									112			
Total HxCDD									10.9			
Total HxCDF									34.5			
Total PeCDD									1.21			
Total PeCDF									4.3			
Total TCDD									1.04			
Total TCDF									2.83			

TABLE A-1
SURFACE SEDIMENT ANALYTICAL RESULTS
BOEING ISAACSON-THOMPSON SITE
TUKWILA, WASHINGTON

Location	R27SD	R31SD	SD-216	SD-217
Sample ID	SD0022	SD0003	SD-216-0000	SD-217-0000
Sample Date	10/11/97	10/09/97	08/26/04	08/27/04
Depth (ft bgs)	0 to 0.33	0 to 0.33	0 to 0.33	0 to 0.33
Conventionals				
Ammonia (mg-N/kg dw)				
Percent moisture (%ww)				
Total organic carbon (%dw)	1.5	1.2	2.02	1.84
Total solids (%ww)	50.7	47.9		
Total solids (preserved) (%ww)				
Total sulfides (mg/kg dw)				
Grain size (%dw)				
Fractional % >9525 microns				
Fractional % phi >-1 (>2000 microns)				
Fractional % phi >-3 (>8000 microns)				
Fractional % phi 0-1 (500-1000 microns)	1	1		
Fractional % phi -1-0 (1000-2000 microns)		1		
Fractional % phi 10+ (<0.98 micron)	5	5		
Fractional % phi 1-2 (250-500 microns)	3	4		
Fractional % phi -2-(-1) (2000-4000 microns)		1		
Fractional % phi 2-3 (125-250 microns)	5	6		
Fractional % phi -3-(-2) (4000-8000 microns)				
Fractional % phi 3-4 (62.5-125 microns)	12	10		
Fractional % phi 4-5 (31.2-62.5 microns)	28	25		
Fractional % phi 5-6 (15.6-31.2 microns)	20	23		
Fractional % phi 6-7 (7.8-15.6 microns)	13	12		
Fractional % phi 7-8 (3.9-7.8 microns)	7	6		
Fractional % phi 8-9 (1.95-3.9 microns)	4	4		
Fractional % phi 9-10 (0.98-1.95 microns)	2	2		
Fractional % Sieve 3/8-inch (4750-9525 microns)				
Total clay	11	11		
Total fines (percent silt+clay)	79	77		
Total gravel		1		
Total sand	21	22		
Total silt	68	66		
Metals (mg/kg dw)				
Aluminum				
Antimony				
Arsenic	14.1	26.7		
Barium				
Beryllium				
Cadmium	0.4 UJ	0.5 J		
Calcium				
Chromium	31 J	36 J		
Cobalt				
Copper	40	53		
Iron				
Lead	31	94		
Magnesium				
Manganese				
Mercury	0.17	0.1		
Molybdenum				
Nickel	26	24		
Potassium				
Selenium				
Silver	0.4 U	0.4 U		
Sodium				
Thallium				

TABLE A-1
SURFACE SEDIMENT ANALYTICAL RESULTS
BOEING ISAACSON-THOMPSON SITE
TUKWILA, WASHINGTON

Location	R27SD	R31SD	SD-216	SD-217
Sample ID	SD0022	SD0003	SD-216-0000	SD-217-0000
Sample Date	10/11/97	10/09/97	08/26/04	08/27/04
Depth (ft bgs)	0 to 0.33	0 to 0.33	0 to 0.33	0 to 0.33
Tin				
Vanadium				
Zinc	93	128		
PAHs (ug/kg dw)				
1-Methylnaphthalene				
2-Chloronaphthalene	19 U	19 U		
2-Methylnaphthalene	19 U	19 U		
Acenaphthene	30	20		
Acenaphthylene	19 U	19 U		
Anthracene	55	160		
Benzo(a)anthracene	220	300		
Benzo(a)pyrene	260	360		
Benzo(b)fluoranthene	250	400		
Benzo(g,h,i)perylene	210	280		
Benzo(k)fluoranthene	320	370		
Chrysene	340	480		
cPAHs - mammal - half DL	400	540		
Dibenzo(a,h)anthracene	95	100		
Dibenzofuran	23	24		
Fluoranthene	540	570		
Fluorene	34	34		
Indeno(1,2,3-cd)pyrene	220	250		
Naphthalene	19 U	19 U		
Phenanthrene	360	390		
Pyrene	640	830		
Total benzofluoranthenes	570	770		
Total HPAHs	3,100	3,940		
Total LPAHs	480	600		
Total PAHs	3,570	4,540		
Other SVOCs (ug/kg dw)				
1,2,4-Trichlorobenzene	19 U	19 U		
1,2-Dichlorobenzene	19 U	19 U		
1,3-Dichlorobenzene	19 U	19 U		
1,4-Dichlorobenzene	19 UJ	19 UJ		
2,4,5-Trichlorophenol	97 U	96 U		
2,4,6-Trichlorophenol	97 U	96 U		
2,4-Dichlorophenol	58 U	58 U		
2,4-Dimethylphenol	19 U	19 U		
2,4-Dinitrophenol	190 UJ	190 UJ		
2,4-Dinitrotoluene	97 U	96 U		
2,6-Dinitrotoluene	97 U	96 U		
2-Chlorophenol	19 U	19 U		
2-Methylphenol	19 U	19 U		
2-Nitroaniline	97 U	96 U		
2-Nitrophenol	97 U	96 U		
3,3'-Dichlorobenzidine	97 U	96 U		
3-Nitroaniline	120 U	120 U		
4,6-Dinitro-o-cresol	190 UJ	190 UJ		
4-Bromophenyl phenyl ether	19 U	19 U		
4-Chloro-3-methylphenol	39 U	38 U		
4-Chloroaniline	58 U	58 U		
4-Chlorophenyl phenyl ether	19 U	19 U		
4-Methylphenol	19 U	19 U		
4-Nitroaniline	97 UJ	96 UJ		

TABLE A-1
SURFACE SEDIMENT ANALYTICAL RESULTS
BOEING ISAACSON-THOMPSON SITE
TUKWILA, WASHINGTON

Location	R27SD	R31SD	SD-216	SD-217
Sample ID	SD0022	SD0003	SD-216-0000	SD-217-0000
Sample Date	10/11/97	10/09/97	08/26/04	08/27/04
Depth (ft bgs)	0 to 0.33	0 to 0.33	0 to 0.33	0 to 0.33
4-Nitrophenol	97 UJ	96 UJ		
Aniline				
Benzoic acid	190 UJ	190 UJ		
Benzyl alcohol	19 UJ	19 UJ		
bis(2-chloroethoxy)methane	19 U	19 U		
bis(2-chloroethyl)ether	39 U	38 U		
bis(2-chloroisopropyl)ether	19 U	19 U		
Carbazole	82	120		
Hexachlorobenzene	1.0 U	1.2		
Hexachlorobutadiene	19 U	19 U		
Hexachlorocyclopentadiene	97 UJ	96 UJ		
Hexachloroethane	19 U	19 U		
Isophorone	19 U	19 U		
Nitrobenzene	19 U	19 U		
n-Nitrosodimethylamine				
n-Nitroso-di-n-propylamine	39 U	38 U		
n-Nitrosodiphenylamine	19 U	19 U		
Pentachlorophenol				
Phenol	19 U	19 U		
PCBs (ug/kg dw)				
Aroclor-1016	19 U	19 U	93 U	20 U
Aroclor-1221	39 U	39 U	93 U	20 U
Aroclor-1232	19 U	19 U	190 U	20 U
Aroclor-1242	38 UJ	12 J	93 U	
Aroclor-1248	19 U	19 U	120 J	48.3 J
Aroclor-1254	230	59	240 J	201 J
Aroclor-1260	110	48	93 U	43.4
Aroclor-1262				
Aroclor-1268				
Total PCBs	340	119 J	360 J	293 J
Total PCBs + PCTs				
Total PCTs				
PCBs (ng/kg dw)				
PCB TEQ - mammal (half DL)				
PCB-018				
PCB-028				
PCB-044				
PCB-055				
PCB-066				
PCB-077				
PCB-081				
PCB-101				
PCB-105				
PCB-110				
PCB-114				
PCB-118				
PCB-123				
PCB-126				
PCB-128				
PCB-138				
PCB-153				
PCB-156				
PCB-157				
PCB-167				

TABLE A-1
SURFACE SEDIMENT ANALYTICAL RESULTS
BOEING ISAACSON-THOMPSON SITE
TUKWILA, WASHINGTON

Location	R27SD	R31SD	SD-216	SD-217
Sample ID	SD0022	SD0003	SD-216-0000	SD-217-0000
Sample Date	10/11/97	10/09/97	08/26/04	08/27/04
Depth (ft bgs)	0 to 0.33	0 to 0.33	0 to 0.33	0 to 0.33
PCB-169				
PCB-170				
PCB-180				
PCB-187				
PCB-189				
PCB-195				
PCB-206				
PCB-209				
Phthalates (ug/kg dw)				
Bis(2-ethylhexyl)phthalate	280	720		
Butyl benzyl phthalate	91 J	220		
Diethyl phthalate	19 U	19 U		
Dimethyl phthalate	19 U	97		
Di-n-butyl phthalate	19 U	31		
Di-n-octyl phthalate	19 U	51 J		
Organometals (ug/kg dw)				
Dibutyltin as ion				
Monobutyltin as ion				
Tetrabutyltin as ion				
Tributyltin as ion				
Pesticides (ug/kg dw)				
2,4'-DDD				
2,4'-DDE				
2,4'-DDT				
4,4'-DDD				
4,4'-DDE				
4,4'-DDT				
Aldrin				
alpha-BHC				
alpha-Chlordane				
alpha-Endosulfan				
beta-BHC				
beta-Chlordane				
beta-Endosulfan				
cis-Nonachlor				
delta-BHC				
Dieldrin				
Endosulfan sulfate				
Endrin				
Endrin aldehyde				
Endrin ketone				
gamma-BHC				
gamma-Chlordane				
Heptachlor				
Heptachlor epoxide				
Methoxychlor				
Mirex				
Oxychlordane				
Total aldrin/dieldrin				
Total chlordane				
Total DDTs				
Toxaphene				
trans-Nonachlor				
VOCs (ug/kg dw)				

TABLE A-1
SURFACE SEDIMENT ANALYTICAL RESULTS
BOEING ISAACSON-THOMPSON SITE
TUKWILA, WASHINGTON

Location	R27SD	R31SD	SD-216	SD-217
Sample ID	SD0022	SD0003	SD-216-0000	SD-217-0000
Sample Date	10/11/97	10/09/97	08/26/04	08/27/04
Depth (ft bgs)	0 to 0.33	0 to 0.33	0 to 0.33	0 to 0.33
1,1,1,2-Tetrachloroethane				
1,1,1-Trichloroethane				
1,1,2,2-Tetrachloroethane				
1,1,2-Trichloroethane				
1,1,2-Trichlorotrifluoroethane				
1,1-Dichloroacetone				
1,1-Dichloroethane				
1,1-Dichloroethene				
1,1-Dichloropropene				
1,2,3-Trichlorobenzene				
1,2,3-Trichloropropane				
1,2,4-Trimethylbenzene				
1,2-Dibromo-3-chloropropane				
1,2-Dibromoethane (EDB)				
1,2-Dichloroethane				
1,2-Dichloropropane				
1,3,5-Trimethylbenzene				
1,3-Dichloropropane				
1-Chlorobutane				
2,2-Dichloropropane				
2-Chlorotoluene				
2-Hexanone				
2-Nitropropane				
4-Chlorotoluene				
Acetone				
Allyl chloride				
Benzene				
Bromobenzene				
Bromochloromethane				
Bromodichloromethane				
Bromoform				
Bromomethane				
Carbon disulfide				
Carbon tetrachloride				
Chlorobenzene				
Chloroethane				
Chloroform				
Chloromethane				
cis-1,2-Dichloroethene				
cis-1,3-Dichloropropene				
Dibromochloromethane				
Dibromomethane				
Dichloromethane				
Diethyl ether				
Ethyl methacrylate				
Ethylbenzene				
Iodomethane				
Isopropylbenzene				
m,p-Xylene				
Methacrylonitrile				
Methyl acrylate				
Methyl ethyl ketone				
Methyl isobutyl ketone				
Methyl methacrylate				

TABLE A-1
SURFACE SEDIMENT ANALYTICAL RESULTS
BOEING ISAACSON-THOMPSON SITE
TUKWILA, WASHINGTON

Location	R27SD	R31SD	SD-216	SD-217
Sample ID	SD0022	SD0003	SD-216-0000	SD-217-0000
Sample Date	10/11/97	10/09/97	08/26/04	08/27/04
Depth (ft bgs)	0 to 0.33	0 to 0.33	0 to 0.33	0 to 0.33
n-Butylbenzene				
n-Propylbenzene				
o-Xylene				
p-Cymene				
Pentachloroethane				
sec-Butylbenzene				
Styrene				
tert-Butyl methyl ether				
tert-Butylbenzene				
Tetrachloroethene				
Toluene				
Total xylenes				
trans-1,2-Dichloroethene				
trans-1,3-Dichloropropene				
trans-1,4-Dichloro-2-butene				
Trichloroethene				
Trichlorofluoromethane				
Vinyl chloride				
Dioxin/furan (ng/kg dw)				
1,2,3,4,6,7,8-HpCDD				
1,2,3,4,6,7,8-HpCDF				
1,2,3,4,7,8,9-HpCDF				
1,2,3,4,7,8-HxCDD				
1,2,3,4,7,8-HxCDF				
1,2,3,6,7,8-HxCDD				
1,2,3,6,7,8-HxCDF				
1,2,3,7,8,9-HxCDD				
1,2,3,7,8,9-HxCDF				
1,2,3,7,8-PeCDD				
1,2,3,7,8-PeCDF				
2,3,4,6,7,8-HxCDF				
2,3,4,7,8-PeCDF				
2,3,7,8-TCDD				
2,3,7,8-TCDF				
Dioxin/furan TEQ - mammal (half DL)				
OCDD				
OCDF				
Total HpCDD				
Total HpCDF				
Total HxCDD				
Total HxCDF				
Total PeCDD				
Total PeCDF				
Total TCDD				
Total TCDF				

TABLE A-1
SURFACE SEDIMENT ANALYTICAL RESULTS
BOEING ISAACSON-THOMPSON SITE
TUKWILA, WASHINGTON

Location	SD-315	SD-336	SD-345
Sample ID	SD-315-0000	SD-336-0000	SD-345-0000
Sample Date	08/17/04	08/27/04	08/26/04
Depth (ft bgs)	0 to 0.33	0 to 0.33	0 to 0.33
Conventionals			
Ammonia (mg-N/kg dw)			
Percent moisture (%ww)			
Total organic carbon (%dw)	1.57	1.55	1.24
Total solids (%ww)			
Total solids (preserved) (%ww)			
Total sulfides (mg/kg dw)			
Grain size (%dw)			
Fractional % >9525 microns			
Fractional % phi >-1 (>2000 microns)	1.4		
Fractional % phi >-3 (>8000 microns)			
Fractional % phi 0-1 (500-1000 microns)	3.7		
Fractional % phi -1-0 (1000-2000 microns)	1.7		
Fractional % phi 10+ (<0.98 micron)	4.6		
Fractional % phi 1-2 (250-500 microns)	17		
Fractional % phi -2-(-1) (2000-4000 microns)			
Fractional % phi 2-3 (125-250 microns)	18.4		
Fractional % phi -3-(-2) (4000-8000 microns)			
Fractional % phi 3-4 (62.5-125 microns)	10.4		
Fractional % phi 4-5 (31.2-62.5 microns)	10.7		
Fractional % phi 5-6 (15.6-31.2 microns)	12.8		
Fractional % phi 6-7 (7.8-15.6 microns)	9.9		
Fractional % phi 7-8 (3.9-7.8 microns)	5.2		
Fractional % phi 8-9 (1.95-3.9 microns)	2.5		
Fractional % phi 9-10 (0.98-1.95 microns)	1.7		
Fractional % Sieve 3/8-inch (4750-9525 microns)			
Total clay	8.8		
Total fines (percent silt+clay)	47.4		
Total gravel	1.4		
Total sand	51		
Total silt	38.6		
Metals (mg/kg dw)			
Aluminum			
Antimony			
Arsenic	12		
Barium			
Beryllium			
Cadmium	0.54		
Calcium			
Chromium	77.7		
Cobalt			
Copper	68.8		
Iron			
Lead	67.6		
Magnesium			
Manganese			
Mercury	0.09 J		
Molybdenum			
Nickel	57.5		
Potassium			
Selenium			
Silver	0.99 U		
Sodium			
Thallium			

TABLE A-1
SURFACE SEDIMENT ANALYTICAL RESULTS
BOEING ISAACSON-THOMPSON SITE
TUKWILA, WASHINGTON

Location	SD-315	SD-336	SD-345
Sample ID	SD-315-0000	SD-336-0000	SD-345-0000
Sample Date	08/17/04	08/27/04	08/26/04
Depth (ft bgs)	0 to 0.33	0 to 0.33	0 to 0.33
Tin			
Vanadium			
Zinc	133		
PAHs (ug/kg dw)			
1-Methylnaphthalene			
2-Chloronaphthalene	20 U		
2-Methylnaphthalene	20 U		
Acenaphthene	44		
Acenaphthylene	23		
Anthracene	130		
Benzo(a)anthracene	660		
Benzo(a)pyrene	780		
Benzo(b)fluoranthene	1,100		
Benzo(g,h,i)perylene	300		
Benzo(k)fluoranthene	950		
Chrysene	950		
cPAHs - mammal - half DL	1,200		
Dibenzo(a,h)anthracene	150		
Dibenzofuran	31		
Fluoranthene	2,300		
Fluorene	51		
Indeno(1,2,3-cd)pyrene	390		
Naphthalene	20 U		
Phenanthrene	680		
Pyrene	1,800		
Total benzofluoranthenes	2,100		
Total HPAHs	9,400		
Total LPAHs	930		
Total PAHs	10,300		
Other SVOCs (ug/kg dw)			
1,2,4-Trichlorobenzene	20 U		
1,2-Dichlorobenzene	20 U		
1,3-Dichlorobenzene	20 U		
1,4-Dichlorobenzene	20 U		
2,4,5-Trichlorophenol	100 U		
2,4,6-Trichlorophenol	100 U		
2,4-Dichlorophenol	100 U		
2,4-Dimethylphenol	20 U		
2,4-Dinitrophenol	200 U		
2,4-Dinitrotoluene	100 U		
2,6-Dinitrotoluene	100 U		
2-Chlorophenol	20 U		
2-Methylphenol	20 U		
2-Nitroaniline	100 U		
2-Nitrophenol	100 U		
3,3'-Dichlorobenzidine	100 U		
3-Nitroaniline	100 U		
4,6-Dinitro-o-cresol	200 U		
4-Bromophenyl phenyl ether	20 U		
4-Chloro-3-methylphenol	100 U		
4-Chloroaniline	100 U		
4-Chlorophenyl phenyl ether	20 U		
4-Methylphenol	20 U		
4-Nitroaniline	100 U		

TABLE A-1
SURFACE SEDIMENT ANALYTICAL RESULTS
BOEING ISAACSON-THOMPSON SITE
TUKWILA, WASHINGTON

Location	SD-315	SD-336	SD-345
Sample ID	SD-315-0000	SD-336-0000	SD-345-0000
Sample Date	08/17/04	08/27/04	08/26/04
Depth (ft bgs)	0 to 0.33	0 to 0.33	0 to 0.33
4-Nitrophenol	100 U		
Aniline			
Benzoic acid	200 U		
Benzyl alcohol	20 U		
bis(2-chloroethoxy)methane	20 U		
bis(2-chloroethyl)ether	20 U		
bis(2-chloroisopropyl)ether	20 U		
Carbazole	150		
Hexachlorobenzene	20 U		
Hexachlorobutadiene	20 U		
Hexachlorocyclopentadiene	100 U		
Hexachloroethane	20 U		
Isophorone	20 U		
Nitrobenzene	20 U		
n-Nitrosodimethylamine			
n-Nitroso-di-n-propylamine	100 U		
n-Nitrosodiphenylamine	20 U		
Pentachlorophenol	100 U		
Phenol	28		
PCBs (ug/kg dw)			
Aroclor-1016	66 U	71 U	20 U
Aroclor-1221	66 U	71 U	20 U
Aroclor-1232	130 U	140 U	20 U
Aroclor-1242	66 U	71 U	
Aroclor-1248	66 U	71 U	20 U
Aroclor-1254	150	180 J	124
Aroclor-1260	110 J	71 J	58.1
Aroclor-1262			
Aroclor-1268			
Total PCBs	260 J	250 J	182
Total PCBs + PCTs			
Total PCTs			
PCBs (ng/kg dw)			
PCB TEQ - mammal (half DL)			
PCB-018			
PCB-028			
PCB-044			
PCB-055			
PCB-066			
PCB-077			
PCB-081			
PCB-101			
PCB-105			
PCB-110			
PCB-114			
PCB-118			
PCB-123			
PCB-126			
PCB-128			
PCB-138			
PCB-153			
PCB-156			
PCB-157			
PCB-167			

TABLE A-1
SURFACE SEDIMENT ANALYTICAL RESULTS
BOEING ISAACSON-THOMPSON SITE
TUKWILA, WASHINGTON

Location	SD-315	SD-336	SD-345
Sample ID	SD-315-0000	SD-336-0000	SD-345-0000
Sample Date	08/17/04	08/27/04	08/26/04
Depth (ft bgs)	0 to 0.33	0 to 0.33	0 to 0.33
PCB-169			
PCB-170			
PCB-180			
PCB-187			
PCB-189			
PCB-195			
PCB-206			
PCB-209			
Phthalates (ug/kg dw)			
Bis(2-ethylhexyl)phthalate	610		
Butyl benzyl phthalate	140		
Diethyl phthalate	20 U		
Dimethyl phthalate	35		
Di-n-butyl phthalate	20 U		
Di-n-octyl phthalate	20 U		
Organometals (ug/kg dw)			
Dibutyltin as ion			
Monobutyltin as ion			
Tetrabutyltin as ion			
Tributyltin as ion			
Pesticides (ug/kg dw)			
2,4'-DDD			
2,4'-DDE			
2,4'-DDT			
4,4'-DDD			
4,4'-DDE			
4,4'-DDT			
Aldrin			
alpha-BHC			
alpha-Chlordane			
alpha-Endosulfan			
beta-BHC			
beta-Chlordane			
beta-Endosulfan			
cis-Nonachlor			
delta-BHC			
Dieldrin			
Endosulfan sulfate			
Endrin			
Endrin aldehyde			
Endrin ketone			
gamma-BHC			
gamma-Chlordane			
Heptachlor			
Heptachlor epoxide			
Methoxychlor			
Mirex			
Oxychlordane			
Total aldrin/dieldrin			
Total chlordane			
Total DDTs			
Toxaphene			
trans-Nonachlor			
VOCs (ug/kg dw)			

TABLE A-1
SURFACE SEDIMENT ANALYTICAL RESULTS
BOEING ISAACSON-THOMPSON SITE
TUKWILA, WASHINGTON

Location	SD-315	SD-336	SD-345
Sample ID	SD-315-0000	SD-336-0000	SD-345-0000
Sample Date	08/17/04	08/27/04	08/26/04
Depth (ft bgs)	0 to 0.33	0 to 0.33	0 to 0.33
1,1,1,2-Tetrachloroethane			
1,1,1-Trichloroethane			
1,1,2,2-Tetrachloroethane			
1,1,2-Trichloroethane			
1,1,2-Trichlorotrifluoroethane			
1,1-Dichloroacetone			
1,1-Dichloroethane			
1,1-Dichloroethene			
1,1-Dichloropropene			
1,2,3-Trichlorobenzene			
1,2,3-Trichloropropane			
1,2,4-Trimethylbenzene			
1,2-Dibromo-3-chloropropane			
1,2-Dibromoethane (EDB)			
1,2-Dichloroethane			
1,2-Dichloropropane			
1,3,5-Trimethylbenzene			
1,3-Dichloropropane			
1-Chlorobutane			
2,2-Dichloropropane			
2-Chlorotoluene			
2-Hexanone			
2-Nitropropane			
4-Chlorotoluene			
Acetone			
Allyl chloride			
Benzene			
Bromobenzene			
Bromochloromethane			
Bromodichloromethane			
Bromoform			
Bromomethane			
Carbon disulfide			
Carbon tetrachloride			
Chlorobenzene			
Chloroethane			
Chloroform			
Chloromethane			
cis-1,2-Dichloroethene			
cis-1,3-Dichloropropene			
Dibromochloromethane			
Dibromomethane			
Dichloromethane			
Diethyl ether			
Ethyl methacrylate			
Ethylbenzene			
Iodomethane			
Isopropylbenzene			
m,p-Xylene			
Methacrylonitrile			
Methyl acrylate			
Methyl ethyl ketone			
Methyl isobutyl ketone			
Methyl methacrylate			

TABLE A-1
SURFACE SEDIMENT ANALYTICAL RESULTS
BOEING ISAACSON-THOMPSON SITE
TUKWILA, WASHINGTON

Location	SD-315	SD-336	SD-345
Sample ID	SD-315-0000	SD-336-0000	SD-345-0000
Sample Date	08/17/04	08/27/04	08/26/04
Depth (ft bgs)	0 to 0.33	0 to 0.33	0 to 0.33
n-Butylbenzene			
n-Propylbenzene			
o-Xylene			
p-Cymene			
Pentachloroethane			
sec-Butylbenzene			
Styrene			
tert-Butyl methyl ether			
tert-Butylbenzene			
Tetrachloroethene			
Toluene			
Total xylenes			
trans-1,2-Dichloroethene			
trans-1,3-Dichloropropene			
trans-1,4-Dichloro-2-butene			
Trichloroethene			
Trichlorofluoromethane			
Vinyl chloride			
Dioxin/furan (ng/kg dw)			
1,2,3,4,6,7,8-HpCDD			
1,2,3,4,6,7,8-HpCDF			
1,2,3,4,7,8,9-HpCDF			
1,2,3,4,7,8-HxCDD			
1,2,3,4,7,8-HxCDF			
1,2,3,6,7,8-HxCDD			
1,2,3,6,7,8-HxCDF			
1,2,3,7,8,9-HxCDD			
1,2,3,7,8,9-HxCDF			
1,2,3,7,8-PeCDD			
1,2,3,7,8-PeCDF			
2,3,4,6,7,8-HxCDF			
2,3,4,7,8-PeCDF			
2,3,7,8-TCDD			
2,3,7,8-TCDF			
Dioxin/furan TEQ - mammal (half DL)			
OCDD			
OCDF			
Total HpCDD			
Total HpCDF			
Total HxCDD			
Total HxCDF			
Total PeCDD			
Total PeCDF			
Total TCDD			
Total TCDF			

Notes:

1. Data qualifiers are as follows.
   - J = Analyte was positively identified and detected; however, concentration is an estimated value because the result is less than the quantitation limit or quality control criteria were not met.
   - U = Analyte not detected at quantitation limit indicated.
   - UJ = Analyte not detected at the indicated quantitation limit, which is estimated.
2. Organic carbon normalization is performed on samples with TOC between 0.5% and 4%.

Abbreviations:

CSL = Cleanup Screening Level
mg/kg = milligrams per kilogram
OC = organic carbon
PCBs = polychlorinated biphenyls
SQS = Sediment Quality Standard
TOC = total organic carbon
µg/kg = micrograms per kilogram
dw = dry weight
ft bgs = feet below ground or sediment surface

TABLE A-2
SEDIMENT CORE SAMPLE ANALYTICAL RESULTS
BOEING ISAACSON-THOMPSON SITE
TUKWILA, WASHINGTON

Location	AN-043	AN-043	AN-043	AN-043	AN-043	AN-043	AN-044	AN-044	AN-044	AN-044	AN-044	AN-044	AN-044	DR220
Sample ID	AN043-SC-080211-A	AN043-SC-080211-B	AN043-SC-080211-C	AN043-SC-080211-D	AN043-SC-080211-E	AN043-SC-080211-F	AN044-SC-080211-A	AN044-SC-080211-B	AN044-SC-080211-C	AN044-SC-080211-D	AN044-SC-080211-E	AN044-SC-080211-F	AN094-SC-080211-B	SD-DR220-0000A
Sample Date	2/11/08	2/11/08	2/11/08	2/11/08	2/11/08	2/11/08	2/11/08	2/11/08	2/11/08	2/11/08	2/11/08	2/11/08	2/12/08	9/23/98
Depth (ft BGS)	0 to 1	1 to 2	2 to 3	3 to 4	4 to 5	5 to 6	0 to 1	1 to 2	2 to 3.5	3.5 to 4.5	4.5 to 5.5	5.5 to 6.5	1 to 2	0 to 2
Conventionals														
Ammonia (mg/kg dw)														
Percent moisture (%dw)														
Specific gravity (g/cc)														
Total organic carbon (% dw)	1.06	2.86	3.03	0.061	0.069	0.076	2.3	2.79	1.05	0.291	0.125	0.348	2.17	2.42
Total solids (%ww)	66.3	59.7	74.5	81.3	89.8	87.6	62.7	65.6	74.1	93.3	93.7	93.7	65.1	
Total volatile solids (%ww)														
Grain size (%dw)														
Fractional % >9525 microns														0.010 U
Fractional % phi >-1 (>2000 microns)														
Fractional % phi 0-1 (500-1000 microns)														0.95 J
Fractional % phi -1-0 (1000-2000 microns)														0.17 J
Fractional % phi 10+ (<0.98 micron)														6.6
Fractional % phi 1-2 (250-500 microns)														1.1 J
Fractional % phi -2-(-1) (2000-4000 microns)														0.080 J
Fractional % phi 2-3 (125-250 microns)														2.2 J
Fractional % phi 3-4 (62.5-125 microns)														12 J
Fractional % phi 4-5 (31.2-62.5 microns)														20
Fractional % phi 5-6 (15.6-31.2 microns)														23
Fractional % phi 6-7 (7.8-15.6 microns)														19
Fractional % phi 7-8 (3.9-7.8 microns)														7.7
Fractional % phi 8-9 (1.95-3.9 microns)														4.2
Fractional % phi 9-10 (0.98-1.95 microns)														2.8
Fractional % Sieve 3/8-inch (4750-9525 microns)														0.010 U
Total clay	7.3	12.6	4.4				15	12.5	6	0.6			13.8	13.6
Total Fines	35.7	60.2	21.9	0.6	0.7	1.2	80.1	57.9	33.6	2.9	0.2	0.1	64.7	
Total fines (percent silt+clay)														83
Total gravel	2.7	7.2	2.1	0.01	0.01	0.3	1	10.4	0.1	0.6	0.6	1.1	1.1	0.080 J
Total sand	61.7	32.5	76	99.5	99.3	98.5	18.9	31.7	66.1	96.5	99.2	98.7	34.2	16 J
Total silt	28.5	47.6	17.5				65.2	45.3	27.7	2.3			50.8	70
Geotechnical														
Atterberg limits classification														
Bulk density (dry) (pcf)														
Bulk density (wet) (pcf)														
Porosity (S.U.)														
Metals (mg/kg dw)														
Aluminum														23,000
Antimony														10 UJ
Arsenic	7.2	10.9	10.2	1.2	1.2	1.3	14.3	23.2	4.3	2	2.1	1.9	21.6	10
Barium														79
Beryllium														0.42
Cadmium	0.6	16.9	0.4	0.2 U	0.2 U	0.2 U	1.6	1.5	0.3 U	0.2 U	0.2 U	0.2 U	1.6	0.35
Calcium														6,100
Chromium	30.0 J	514 J	19.0 J	7.5 J	10.7 J	12.2 J	67.9	37.4	13.1	9.2	9.1	11.9	40.4	30
Cobalt														10
Copper	36.0 J	0.8 J	0.6 J	0.6 J	0.5 J	0.6 J	68.8	46.9	18.3	9.9	10.1	9.3	51.5	47
Iron														31,000
Lead	1 J	2,530 J	1 J	1 J	1 J	1 J	161	52	7	1	1	1	63	25

TABLE A-2
SEDIMENT CORE SAMPLE ANALYTICAL RESULTS
BOEING ISAACSON-THOMPSON SITE
TUKWILA, WASHINGTON

Location	AN-043	AN-043	AN-043	AN-043	AN-043	AN-043	AN-044	AN-044	AN-044	AN-044	AN-044	AN-044	AN-044	DR220
Sample ID	AN043-SC-080211-A	AN043-SC-080211-B	AN043-SC-080211-C	AN043-SC-080211-D	AN043-SC-080211-E	AN043-SC-080211-F	AN044-SC-080211-A	AN044-SC-080211-B	AN044-SC-080211-C	AN044-SC-080211-D	AN044-SC-080211-E	AN044-SC-080211-F	AN094-SC-080211-B	SD-DR220-0000A
Sample Date	2/11/08	2/11/08	2/11/08	2/11/08	2/11/08	2/11/08	2/11/08	2/11/08	2/11/08	2/11/08	2/11/08	2/11/08	2/12/08	9/23/98
Depth (ft BGS)	0 to 1	1 to 2	2 to 3	3 to 4	4 to 5	5 to 6	0 to 1	1 to 2	2 to 3.5	3.5 to 4.5	4.5 to 5.5	5.5 to 6.5	1 to 2	0 to 2
Magnesium														8,100
Manganese														320
Mercury	0.09	1.51	0.09	0.05 U	0.04 U	0.05 U	0.34	0.24	0.06	0.04 U	0.05 U	0.04 U	0.27	0.20 J
Molybdenum														
Nickel														22
Potassium														2,900
Selenium														0.70 J
Silver	0.3 U	2.3	0.8	0.2 U	0.2 U	0.2 U	1.4 J	1.7 J	0.3 UJ	0.2 UJ	0.2 UJ	0.2 UJ	1.8 J	0.22
Sodium														11,000
Thallium														0.08
Tin														5
Vanadium														70
Zinc	112	1,250	54	21	23	24	167	100	37	22	23	24	108	100
PAHs (ug/kg dw)														
1-Methylnaphthalene	10 J	380	20 U				20 U	20 U						
2-Chloronaphthalene														20 U
2-Methylnaphthalene	11 J	99 J	10 J				13 J						13 J	20 U
Acenaphthene	20 J	310	12 J											20 U
Acenaphthylene		99 UJ	20 J										12 J	20 U
Anthracene	28 J	99 J	17 J				27	10 J					20 J	20 U
Benzo(a)anthracene	20 J	99 J	20 J				72	23 J					20 J	60
Benzo(a)pyrene	110	520	20 J				69	20 J					28	70
Benzo(b)fluoranthene	160	670	27				84	21					34	80
Benzo(g,h,i)perylene	34	110					27	17 J					25	50
Benzo(k)fluoranthene	120	540	20 J				96	26					33	80
Chrysene	130 J	1,400 J	28 J				100	30					41	90
cPAHs - mammal - half DL	150 J	690 J	27 J				98	29 J					39 J	100
Dibenzo(a,h)anthracene	20 J	41												20 U
Dibenzofuran	13 J	96 J	10 J											20 U
Fluoranthene	310	4,600	130				260	88	25				120	140
Fluorene	14 J	120	14 J				10 J						12 J	20 U
Indeno(1,2,3-cd)pyrene	41	120					27	14 J					20 J	60
Naphthalene	20 J	100 J	20 J				10 J	12 J					23 J	20 U
Phenanthrene	120 J	99 J	20 J				60	34	20 J				50	60
Pyrene	20 J	2,800	85				190	70	20				96	170
Total benzofluoranthenes	280	1,210	47 J				180	47					67	160
Total HPAHs	970 J	10,900 J	330 J				930	309 J	45				420 J	800
Total LPAHs	200 J	730 J	103 J				107 J	56 J	20 J				117 J	60
Total PAHs	1,170 J	11,600 J	430 J				1,030 J	365 J	65 J				530 J	860
Other SVOCs (ug/kg dw)														
1,2,4-Trichlorobenzene												5.9 UJ		20 U
1,2-Dichlorobenzene												5.9 UJ		20 U
1,3-Dichlorobenzene	6.1 U	18 U	6.2 U	6.1 U	6.2 U	6.2 U	18 U	6.1 U	6.1 U	6.0 U	6.0 U	5.9 U		20 U
1,4-Dichlorobenzene														20 U
2,4,5-Trichlorophenol														200 U
2,4,6-Trichlorophenol														200 U
2,4-Dichlorophenol														60 U
2,4-Dimethylphenol		54 J										5.9 UJ		20 U

TABLE A-2
SEDIMENT CORE SAMPLE ANALYTICAL RESULTS
BOEING ISAACSON-THOMPSON SITE
TUKWILA, WASHINGTON

Location	AN-043	AN-043	AN-043	AN-043	AN-043	AN-043	AN-044	AN-044	AN-044	AN-044	AN-044	AN-044	AN-044	DR220
Sample ID	AN043-SC-080211-A	AN043-SC-080211-B	AN043-SC-080211-C	AN043-SC-080211-D	AN043-SC-080211-E	AN043-SC-080211-F	AN044-SC-080211-A	AN044-SC-080211-B	AN044-SC-080211-C	AN044-SC-080211-D	AN044-SC-080211-E	AN044-SC-080211-F	AN094-SC-080211-B	SD-DR220-0000A
Sample Date	2/11/08	2/11/08	2/11/08	2/11/08	2/11/08	2/11/08	2/11/08	2/11/08	2/11/08	2/11/08	2/11/08	2/11/08	2/12/08	9/23/98
Depth (ft BGS)	0 to 1	1 to 2	2 to 3	3 to 4	4 to 5	5 to 6	0 to 1	1 to 2	2 to 3.5	3.5 to 4.5	4.5 to 5.5	5.5 to 6.5	1 to 2	0 to 2
2,4-Dinitrophenol														200 U
2,4-Dinitrotoluene														200 U
2,6-Dinitrotoluene														200 U
2-Chlorophenol														20 U
2-Methylphenol												5.9 UJ		20 U
2-Nitroaniline														100 U
2-Nitrophenol														100 U
3,3'-Dichlorobenzidine														200 U
3-Nitroaniline														200 U
4,6-Dinitro-o-cresol														200 U
4-Bromophenyl phenyl ether														40 U
4-Chloro-3-methylphenol														40 U
4-Chloroaniline														60 U
4-Chlorophenyl phenyl ether														20 U
4-Methylphenol		67 J											17 J	20 U
4-Nitroaniline														100 U
4-Nitrophenol														100 U
Aniline														
Benzoic acid		990 U					130 J							200 U
Benzyl alcohol		99 U												50 U
bis(2-chloroethoxy)methane														40 U
bis(2-chloroethyl)ether														40 U
bis(2-chloroisopropyl)ether														40 U
Carbazole														20 U
Hexachlorobenzene														20 U
Hexachlorobutadiene												5.9 UJ		20 U
Hexachlorocyclopentadiene														100 U
Hexachloroethane	20 U	99 U	20 U				20 U	20 U						20 U
Isophorone														20 U
Nitrobenzene														20 U
n-Nitrosodimethylamine														
n-Nitroso-di-n-propylamine														40 U
n-Nitrosodiphenylamine	10 UJ											5.9 UJ		40 U
Pentachlorophenol		93 UJ												100 UJ
Phenol		99 U					28		25	83	20 J	170	21	20 U
PCBs (ug/kg dw)														
Aroclor-1016										10 U				20 U
Aroclor-1221										10 U				40 U
Aroclor-1232										10 U				20 U
Aroclor-1242							500			10 U				130
Aroclor-1248										10 U				20 U
Aroclor-1254	270	1,500					2,000	240		10 U			190	470
Aroclor-1260		310					510	230		10 U			180	230
Aroclor-1262			55							10 U				
Aroclor-1268										10 U				
PCB-018														6
PCB-028														13
PCB-044														14

TABLE A-2
SEDIMENT CORE SAMPLE ANALYTICAL RESULTS
BOEING ISAACSON-THOMPSON SITE
TUKWILA, WASHINGTON

Location	AN-043	AN-043	AN-043	AN-043	AN-043	AN-043	AN-044	AN-044	AN-044	AN-044	AN-044	AN-044	AN-044	DR220
Sample ID	AN043-SC-080211-A	AN043-SC-080211-B	AN043-SC-080211-C	AN043-SC-080211-D	AN043-SC-080211-E	AN043-SC-080211-F	AN044-SC-080211-A	AN044-SC-080211-B	AN044-SC-080211-C	AN044-SC-080211-D	AN044-SC-080211-E	AN044-SC-080211-F	AN094-SC-080211-B	SD-DR220-0000A
Sample Date	2/11/08	2/11/08	2/11/08	2/11/08	2/11/08	2/11/08	2/11/08	2/11/08	2/11/08	2/11/08	2/11/08	2/11/08	2/12/08	9/23/98
Depth (ft BGS)	0 to 1	1 to 2	2 to 3	3 to 4	4 to 5	5 to 6	0 to 1	1 to 2	2 to 3.5	3.5 to 4.5	4.5 to 5.5	5.5 to 6.5	1 to 2	0 to 2
PCB-055														22
PCB-066														34
PCB-077														2.0 U
PCB-081														1.0 U
PCB-101														27
PCB-105														13
PCB-114														2
PCB-118														24
PCB-123														4.0 U
PCB-126														1.0 U
PCB-128														7
PCB-138														40
PCB-153														26
PCB-156														4
PCB-157														1.0 U
PCB-167														2
PCB-169														1.0 U
PCB-170														9
PCB-180														14
PCB-187														9
PCB-189														1.0 U
PCB-195														2
PCB-206														1
PCB-209														1.0 U
Total PCBs	270	1,800	55				3,000	470		10 U			370	830
Phthalates (ug/kg dw)														
Bis(2-ethylhexyl)phthalate	330 J	1,100 J					290	21					23	160
Butyl benzyl phthalate	57		16 U		16 U		240						16 U	20
Diethyl phthalate		99 UJ												20 U
Dimethyl phthalate	24		16 U		16 U		48						16 U	20 U
Di-n-butyl phthalate	20 J	99 J					71							20 U
Di-n-octyl phthalate		99 UJ												20 U
Pesticides (ug/kg dw)														
Aldrin														
beta-Chlordane														
Chlordane														
Dieldrin														
Heptachlor epoxide														
Total aldrin/dieldrin														
Total chlordane														
Total DDTs														
VOCs (ug/kg dw)														
Ethylbenzene														
Total xylenes														
Trichloroethene														

TABLE A-2
SEDIMENT CORE SAMPLE ANALYTICAL RESULTS
BOEING ISAACSON-THOMPSON SITE
TUKWILA, WASHINGTON

Location	DR220	DU9120XX	LDW-SC50a	LDW-SC50a	LDW-SC50a	LDW-SC50a	LDW-SC51	LDW-SC51	LDW-SC51	LDW-SC51	LDW-SC51	LDW-SC51	LDW-SC51	SD-216
Sample ID	SD-DR220-0020	DUWO&M91S012	LDW-SC50-0-1	LDW-SC50-1-2	LDW-SC50-2_8-4	LDW-SC50-2-2_8	LDW-SC51-0-2	LDW-SC51-0-0_5	LDW-SC51-0_5-1	LDW-SC51-1-1_5	LDW-SC51-1_5-2	LDW-SC51-2-3_8	LDW-SC51-3_8-5_8	SD-216-0000
Sample Date	9/23/98	8/6/91	2/24/06	2/24/06	2/24/06	2/24/06	2/22/200	2/22/06	2/22/06	2/22/06	2/22/06	2/22/06	2/22/06	4/21/04
Depth (ft BGS)	2 to 4	0 to 3	0 to 1	1 to 2	2.8 to 4	2 to 2.8	0 to 2	0 to 0.5	0.5 to 1	1 to 1.5	1.5 to 2	2 to 3.8	3.8 to 5.8	0 to 1
Conventionals														
Ammonia (mg/kg dw)		140												
Percent moisture (%dw)				51.47		39.94	42.42					44.57		
Specific gravity (g/cc)				2.65		2.68	2.73					2.63		
Total organic carbon (% dw)	2.37	1.5	0.63	0.816	0.129	1.18	1.47	1.61	1.64	0.473	0.643	1.73	0.615	1.61
Total solids (%ww)		54	68.6	74.9	83.1	74.6	72.3	68.6	80.4	80.7	79	70.9	82.1	49.1
Total volatile solids (%ww)		4.1												
Grain size (%dw)														
Fractional % >9525 microns	0.010 U													
Fractional % phi >-1 (>2000 microns)			1.6	0.2	1.5	1	23.4					15.9		0.100 J
Fractional % phi 0-1 (500-1000 microns)	1.2 J		3.2	9.2	41.4	22.3	6.9					12.2		1.10 J
Fractional % phi -1-0 (1000-2000 microns)	0.090 J		0.9	0.8	6.4	3.3	2.6					2.5		0.900 J
Fractional % phi 10+ (<0.98 micron)	4.5		2.5	2.2	0.6	1.9	1.5					2.8		6.20 J
Fractional % phi 1-2 (250-500 microns)	2.1 J		12.7	24.9	41.6	25.6	23.2					23.3		2.10 J
Fractional % phi -2-(-1) (2000-4000 microns)	0.010 U													
Fractional % phi 2-3 (125-250 microns)	3.8 J		26.4	23.3	7	11.6	20.2					9.3		3.80 J
Fractional % phi 3-4 (62.5-125 microns)	15 J		26.4	19.9	0.8	14	6.3					5.7		10.8 J
Fractional % phi 4-5 (31.2-62.5 microns)	23		13.8	10.6	0.2	8.8	5.3					6.4		16.4 J
Fractional % phi 5-6 (15.6-31.2 microns)	26		5.4	2.9	0.1	5	4.8					7.5		25.6 J
Fractional % phi 6-7 (7.8-15.6 microns)	16		3.3	2.8	0.2	3.3	1.7					1.9		21.3 J
Fractional % phi 7-8 (3.9-7.8 microns)	4.4		1.7	1.7	0.1	1.8	2.1					9.1		5.40 J
Fractional % phi 8-9 (1.95-3.9 microns)	2.4		1.4	1	0.1 U	1	1.2					2.1		3.90 J
Fractional % phi 9-10 (0.98-1.95 microns)	2		0.8	0.5	0.1 U	0.5	0.8					1.4		2.30 J
Fractional % Sieve 3/8-inch (4750-9525 microns)	0.010 U													
Total clay	8.9		4.7	3.7	0.6	3.4	3.5					6.3		12.40 J
Total Fines														
Total fines (percent silt+clay)	78		28.9	21.7	1.2	22.3	17.4					31.2		81.1 J
Total gravel	0.010 U		1.6	0.2	1.5	1	23.4					15.9		0.100 J
Total sand	22 J		69.6	78.1	97.2	76.8	59.2					53		18.7 J
Total silt	69		24.2	18	0.6	18.9	13.9					24.9		68.7 J
Geotechnical														
Atterberg limits classification				Non-Plastic		Non-Plastic	Non-Plastic					Non-Plastic		
Bulk density (dry) (pcf)				73.4		76.4	77					72.6		
Bulk density (wet) (pcf)				111.2		106.9	109.6					105		
Porosity (S.U.)				0.56		0.54	0.55					0.56		
Metals (mg/kg dw)														
Aluminum	22,000													
Antimony	10 UJ	1.8	6 UJ	7 UJ	6 UJ	6 UJ	6 UJ					7 UJ		
Arsenic	10	9.8	707	281	21	161	25					55		
Barium	81													
Beryllium	0.4													
Cadmium	0.48	0.46	0.3 U	0.3 U	0.2 U	0.2 U	0.7					1		0.6
Calcium	5,700													
Chromium	28		28.5	24.3	11.8	21.6	67.4					34.8		33.3
Cobalt	10		5.9	5.6	4.9	6.9	7.5					7.4		
Copper	46	47	36.1	24.4	9.4	24.9	44.5					38.2		51.8
Iron	29,000													
Lead	33	23	47	22	2 U	11	76 J					41 J		33

TABLE A-2
SEDIMENT CORE SAMPLE ANALYTICAL RESULTS
BOEING ISAACSON-THOMPSON SITE
TUKWILA, WASHINGTON

Location	DR220	DU9120XX	LDW-SC50a	LDW-SC50a	LDW-SC50a	LDW-SC50a	LDW-SC51	LDW-SC51	LDW-SC51	LDW-SC51	LDW-SC51	LDW-SC51	LDW-SC51	SD-216
Sample ID	SD-DR220-0020	DUWO&M91S012	LDW-SC50-0-1	LDW-SC50-1-2	LDW-SC50-2_8-4	LDW-SC50-2-2_8	LDW-SC51-0-2	LDW-SC51-0-0_5	LDW-SC51-0_5-1	LDW-SC51-1-1_5	LDW-SC51-1_5-2	LDW-SC51-2-3_8	LDW-SC51-3_8-5_8	SD-216-0000
Sample Date	9/23/98	8/6/91	2/24/06	2/24/06	2/24/06	2/24/06	2/22/200	2/22/06	2/22/06	2/22/06	2/22/06	2/22/06	2/22/06	4/21/04
Depth (ft BGS)	2 to 4	0 to 3	0 to 1	1 to 2	2.8 to 4	2 to 2.8	0 to 2	0 to 0.5	0.5 to 1	1 to 1.5	1.5 to 2	2 to 3.8	3.8 to 5.8	0 to 1
Magnesium	7,400													
Manganese	280													
Mercury	0.20 J	0.1	0.2	0.06 U	0.06 U	0.07	0.10 J					0.12 J		0.12
Molybdenum			1.5	1	0.6 U	0.7	3					7.6		
Nickel	19	27	17	14	8	32	34					33		
Potassium	2,800													
Selenium	0.70 J		6 U	7 U	6 U	6 U	6 U					7 U		
Silver	0.41	0.43	0.4 U	0.4 U	0.3 U	0.4 U	1.1					0.4 U		0.600 U
Sodium	11,000													
Thallium	0.08		6 U	7 U	6 U	6 U	6 U					7 U		
Tin	4													
Vanadium	64		50.6	52.2	39.9	52.4	52.5					60.1		
Zinc	110	130	161	124	47.7	108	203					269		108
PAHs (ug/kg dw)														
1-Methylnaphthalene			60 U	59 U	20 U	20 U	60 U	61 U	60 U	62 U	62 U	59 U		
2-Chloronaphthalene	20 U		60 U	59 U	20 U	20 U	60 U	61 U	60 U	62 U	62 U	59 U		
2-Methylnaphthalene	20 U	28 U	56 J	59 U	20 U	20 U	60 U	79	60 U	62 U	62 U	59 U		
Acenaphthene	20 U	28 U	41 J	59 U	20 U	20 U	380	350	180	250	84	62		
Acenaphthylene	20 U	28 U	60 U	59 U	20 U	20 U	60 U	61 U	60 U	62 U	62 U	59 U		
Anthracene	30	28 U	100	46 J	20 U	20 U	200	540	160	59 J	42 J	82		
Benzo(a)anthracene	170	120	280	140	20 U	12 J	540	1,600	410	130	71	270		
Benzo(a)pyrene	190	130	260	92	20 U	20 U	490	1,600	390	50 J	42 J	260		
Benzo(b)fluoranthene	230		230	88	20 U	11 J	520	1,600	410	87	50 J	210		
Benzo(g,h,i)perylene	130	73	75	59 U	20 U	20 U	160	590	130	62 U	62 U	78		
Benzo(k)fluoranthene	170		260	110	20 U	10 J	480	1,400	360	54 J	52 J	280		
Chrysene	230	160	330	160	20 U	14 J	590	1,900	490	120	67	320		
cPAHs - mammal - half DL	280	160	360	140 J	18 U	18 J	690 J	2,200	540	83 J	65 J	360		
Dibenzo(a,h)anthracene	40	28 U	60 U	59 U	20 U	20 U	49 J	160	38	4.3 J	3.7 J	59 U		
Dibenzofuran	20 U	28 U	60 U	59 U	20 U	20 U	230	230	89	130	92	59 U		
Fluoranthene	350	260	770	200	14 J	40	2,100	4,000	1,200	720	730	810		
Fluorene	20 U	28 U	41 J	59 U	20 U	20 U	150	320	110	62 U	62 U	53 J		
Indeno(1,2,3-cd)pyrene	170	82	100	35 J	20 U	20 UJ	220	690	160	62 U	62 U	110		
Naphthalene	20 U	28 U	60 U	59 U	20 U	20 U	56 J	230	54 J	62 U	62 U	59 U		
Phenanthrene	180	140	420	96	20 U	20	910	2,300	840	120	97	440		
Pyrene	440	380	500	140	11 J	28	1,200	2,600	900	400	360	590		
Total benzofluoranthenes	400	280	490	200	20 U	21 J	1,000	3,000	770	141 J	102 J	490		
Total HPAHs	2,120	2,960	2,810	970 J	25 J	115 J	6,300 J	16,100	4,500	1,570 J	1,380 J	2,930		
Total LPAHs	210	280	600 J	142 J	20 U	20	1,700 J	3,700	1,340 J	430 J	223 J	640 J		
Total PAHs	2,330	1,630	3,410 J	1,110 J	25 J	135 J	8,000 J	19,900	5,800 J	1,990 J	1,600 J	3,570 J		
Other SVOCs (ug/kg dw)														
1,2,4-Trichlorobenzene	20 U	8.4 U	3.6 J	4.1 J	6.0 UJ	6.0 UJ	6.0 U	6.1 UJ	6.0 UJ	6.2 UJ	6.2 UJ	5.9 U		
1,2-Dichlorobenzene	20 U	4.1 U	6.0 U	5.9 U	6.0 U	6.0 U	4.8 J	6.1 U	4.8 J	6.2 U	6.2	20		
1,3-Dichlorobenzene	20 U	4.1 U	60 U	59 U	20 U	20 U	60 U	61 U	60 U	62 U	62 U	59 U		
1,4-Dichlorobenzene	20 U	4.1 U	6.0 U	5.9 U	6.0 U	6.0 U	5.4 J	6.1 U	6.0 U	6.2 U	8.7	11		
2,4,5-Trichlorophenol	200 U		300 U	300 U	99 U	99 U	300 U	300 U	300 U	310 U	310 U	300 U		
2,4,6-Trichlorophenol	200 U		300 U	300 U	99 U	99 U	300 U	300 U	300 U	310 U	310 U	300 U		
2,4-Dichlorophenol	60 U		300 U	300 U	99 U	99 U	300 U	300 U	300 U	310 U	310 U	300 U		
2,4-Dimethylphenol	20 U	14 U	6.0 UJ	5.9 UJ	6.0 UJ	6.0 UJ	6.0 UJ	6.1 UJ	6.0 UJ	6.2 UJ	6.2 UJ	9.5 J		

TABLE A-2
SEDIMENT CORE SAMPLE ANALYTICAL RESULTS
BOEING ISAACSON-THOMPSON SITE
TUKWILA, WASHINGTON

Location	DR220	DU9120XX	LDW-SC50a	LDW-SC50a	LDW-SC50a	LDW-SC50a	LDW-SC51	LDW-SC51	LDW-SC51	LDW-SC51	LDW-SC51	LDW-SC51	LDW-SC51	SD-216
Sample ID	SD-DR220-0020	DUWO&M91S012	LDW-SC50-0-1	LDW-SC50-1-2	LDW-SC50-2_8-4	LDW-SC50-2-2_8	LDW-SC51-0-2	LDW-SC51-0-0_5	LDW-SC51-0_5-1	LDW-SC51-1-1_5	LDW-SC51-1_5-2	LDW-SC51-2-3_8	LDW-SC51-3_8-5_8	SD-216-0000
Sample Date	9/23/98	8/6/91	2/24/06	2/24/06	2/24/06	2/24/06	2/22/200	2/22/06	2/22/06	2/22/06	2/22/06	2/22/06	2/22/06	4/21/04
Depth (ft BGS)	2 to 4	0 to 3	0 to 1	1 to 2	2.8 to 4	2 to 2.8	0 to 2	0 to 0.5	0.5 to 1	1 to 1.5	1.5 to 2	2 to 3.8	3.8 to 5.8	0 to 1
2,4-Dinitrophenol	200 U		600 UJ	590 UJ	200 UJ	200 UJ	600 UJ	610 U	600 U	620 U	620 U	590 UJ		
2,4-Dinitrotoluene	200 U		300 U	300 U	99 U	99 U	300 U	300 U	300 U	310 U	310 U	300 U		
2,6-Dinitrotoluene	200 U		300 U	300 U	99 U	99 U	300 U	300 U	300 U	310 U	310 U	300 U		
2-Chlorophenol	20 U		60 U	59 U	20 U	20 U	60 U	61 U	60 U	62 U	62 U	59 U		
2-Methylphenol	20 U	14 U	3.0 J	5.9 U	6.0 U	6.0 U	6.0 UJ	21 J	6.0 UJ	6.2 UJ	6.2 UJ	5.9 UJ		
2-Nitroaniline	100 U		300 U	300 U	99 U	99 U	300 U	300 U	300 U	310 U	310 U	300 U		
2-Nitrophenol	100 U		300 U	300 U	99 U	99 U	300 U	300 U	300 U	310 U	310 U	300 U		
3,3'-Dichlorobenzidine	200 U		300 UJ	300 UJ	99 UJ	99 UJ	300 UJ	300 U	300 U	310 U	310 U	300 UJ		
3-Nitroaniline	200 U		300 U	300 U	99 U	99 U	300 UJ	300 U	300 U	310 U	310 U	300 UJ		
4,6-Dinitro-o-cresol	200 U		600 UJ	590 UJ	200 UJ	200 UJ	600 U	610 U	600 U	620 U	620 U	590 U		
4-Bromophenyl phenyl ether	40 U		60 U	59 U	20 U	20 U	60 U	61 U	60 U	62 U	62 U	59 U		
4-Chloro-3-methylphenol	40 U		300 U	300 U	99 U	99 U	300 U	300 U	300 U	310 U	310 U	300 U		
4-Chloroaniline	60 U		300 UJ	300 UJ	99 UJ	99 UJ	300 UJ	300 UJ	300 UJ	310 UJ	310 UJ	300 UJ		
4-Chlorophenyl phenyl ether	20 U		60 U	59 U	20 U	20 U	60 U	61 U	60 U	62 U	62 U	59 U		
4-Methylphenol	20 U	28 U	60 U	59 U	20 U	20 U	60 U	61 U	60 U	62 U	62 U	59 U		
4-Nitroaniline	100 U		300 U	300 U	99 U	99 U	300 U	300 U	300 U	310 U	310 U	300 U		
4-Nitrophenol	100 U		300 U	300 U	99 U	99 UJ	300 U	300 U	300 U	310 U	310 U	300 U		
Aniline			60 UJ	59 UJ	20 UJ	20 UJ	60 UJ	61 UJ	60 UJ	62 UJ	62 UJ	59 UJ		
Benzoic acid	200 U	140 U	330 J	130 UJ	64 UJ	100 UJ	90	610 U	600 U	620 U	620 U	68		
Benzyl alcohol	50 U	17 U	30 U	30 U	30 U	30 U	18 J	180	30 U	31 U	31 U	21 J		
bis(2-chloroethoxy)methane	40 U		60 U	59 U	20 U	20 U	60 U	61 U	60 U	62 U	62 U	59 U		
bis(2-chloroethyl)ether	40 U		60 U	59 U	20 U	20 U	60 U	61 U	60 U	62 U	62 U	59 U		
bis(2-chloroisopropyl)ether	40 U		60 U	59 U	20 U	20 U	60 U	61 U	60 U	62 U	62 U	59 U		
Carbazole	30													
Hexachlorobenzene	20 U	17 U	6.0 U	5.9 U	6.0 U	6.0 U	6.0 U	6.1 U	6.0 U	6.2 U	6.2 U	5.9 U		
Hexachlorobutadiene	20 U	28 U	6.0 UJ	5.9 U	6.0 U	6.0 U	6.0 U	6.1 U	6.0 U	6.2 U	6.2 U	5.9 U		
Hexachlorocyclopentadiene	100 U		300 U	300 U	99 U	99 UJ	300 U	300 U	300 U	310 U	310 U	300 U		
Hexachloroethane	20 U	28 U	60 U	59 U	20 U	20 U	60 U	61 U	60 U	62 U	62 U	59 U		
Isophorone	20 U		60 U	59 U	20 U	20 U	60 U	61 U	60 U	62 U	62 U	59 U		
Nitrobenzene	20 U		60 U	59 U	20 U	20 U	60 U	61 U	60 U	62 U	62 U	59 U		
n-Nitrosodimethylamine			30 U	30 U	30 U	30 U	30 U	30 U	30 U	31 U	31 U	30 U		
n-Nitroso-di-n-propylamine	40 U		30 U	30 U	30 U	30 U	30 UJ	30 U	30 U	31 U	31 U	30 UJ		
n-Nitrosodiphenylamine	40 U	17 U	100 U	30 U	6.0 U	21 U	68 U	6.1 U	6.0 U	6.2 U	6.2 U	67 U		
Pentachlorophenol	100 UJ	84 U	30 U	30 U	30 U	30 U	30 U	30 U	30 U	31 U	31 U	30 U		
Phenol	80	28 U	42 J	59 U	13 J	13 J	60 U	96 U	60 U	62 U	62 U	59 U		
PCBs (ug/kg dw)														
Aroclor-1016	20 U	14 U	55 U	110 U	3.8 UJ	7.8 UJ	57 U					54 U	3.9 U	20 U
Aroclor-1221	40 U	56 U	55 U	110 U	3.8 UJ	7.8 UJ	57 U					54 U	3.9 U	20 U
Aroclor-1232	20 U	14 U	55 U	110 U	3.8 UJ	7.8 UJ	57 U					54 U	3.9 U	20 U
Aroclor-1242	33	14 U	55 U	110 U	3.8 U	7.8 U	57 U					54 U	3.9 U	20 U
Aroclor-1248	20 U	14 U	140	270	3.8 U	14 J	170					120	3.9 U	23 J
Aroclor-1254	110	14 U	370	510	3.8 U	27	930					400	3.9 U	39 J
Aroclor-1260	84	48	110 U	210 U	3.8 U	34	190					180	3.9 U	20 U
Aroclor-1262														
Aroclor-1268														
PCB-018	1.0 U													
PCB-028	3													
PCB-044	3													

TABLE A-2
SEDIMENT CORE SAMPLE ANALYTICAL RESULTS
BOEING ISAACSON-THOMPSON SITE
TUKWILA, WASHINGTON

Location	DR220	DU9120XX	LDW-SC50a	LDW-SC50a	LDW-SC50a	LDW-SC50a	LDW-SC51	LDW-SC51	LDW-SC51	LDW-SC51	LDW-SC51	LDW-SC51	LDW-SC51	SD-216
Sample ID	SD-DR220-0020	DUWO&M91S012	LDW-SC50-0-1	LDW-SC50-1-2	LDW-SC50-2_8-4	LDW-SC50-2-2_8	LDW-SC51-0-2	LDW-SC51-0-0_5	LDW-SC51-0_5-1	LDW-SC51-1-1_5	LDW-SC51-1_5-2	LDW-SC51-2-3_8	LDW-SC51-3_8-5_8	SD-216-0000
Sample Date	9/23/98	8/6/91	2/24/06	2/24/06	2/24/06	2/24/06	2/22/200	2/22/06	2/22/06	2/22/06	2/22/06	2/22/06	2/22/06	4/21/04
Depth (ft BGS)	2 to 4	0 to 3	0 to 1	1 to 2	2.8 to 4	2 to 2.8	0 to 2	0 to 0.5	0.5 to 1	1 to 1.5	1.5 to 2	2 to 3.8	3.8 to 5.8	0 to 1
PCB-055	5													
PCB-066	8													
PCB-077	1.0 U													
PCB-081	1.0 U													
PCB-101	5													
PCB-105	2													
PCB-114	1.0 U													
PCB-118	5													
PCB-123	2.0 U													
PCB-126	1.0 U													
PCB-128	2													
PCB-138	11													
PCB-153	8													
PCB-156	1.0 U													
PCB-157	1.0 U													
PCB-167	1.0 U													
PCB-169	1.0 U													
PCB-170	3													
PCB-180	6													
PCB-187	4													
PCB-189	1.0 U													
PCB-195	1													
PCB-206	1													
PCB-209	1.0 U													
Total PCBs	230	96	510	780	3.8 UJ	75 J	1,290					700	3.9 U	62 J
Phthalates (ug/kg dw)														
Bis(2-ethylhexyl)phthalate	470	590	680	64	20 U	63	480	970	1,800	62 U	75	76		
Butyl benzyl phthalate	50	28 U	24	14	6.0 U	6.6	36	43	35	10	17	29		
Diethyl phthalate	20 U	28 U	60 U	59 U	20 U	20 U	60 U	61 U	60 U	62 U	62 U	59 U		
Dimethyl phthalate	30	28 U	60 U	59 U	20 U	20 U	60 U	61 U	60 U	62 U	62 U	59 U		
Di-n-butyl phthalate	20	28 U	60 U	59 U	20 U	23 U	69 U	44 J	51 J	62 U	62 U	59 U		
Di-n-octyl phthalate	20 U	28 U	60 U	59 U	20 U	20 U	60 U	61 U	60 U	62 U	62 U	59 U		
Pesticides (ug/kg dw)														
Aldrin		5												
beta-Chlordane		4.5												
Chlordane		2.8 U												
Dieldrin		1.1 U												
Heptachlor epoxide		1.4 U												
Total aldrin/dieldrin		5												
Total chlordane		4.5												
Total DDTs		6.8												
VOCs (ug/kg dw)														
Ethylbenzene		4.1 U												
Total xylenes		4.1 U												
Trichloroethene		4.1 U												

TABLE A-2
SEDIMENT CORE SAMPLE ANALYTICAL RESULTS
BOEING ISAACSON-THOMPSON SITE
TUKWILA, WASHINGTON

Location	SD-216	SD-216	SD-216	SD-216	SD-216	SD-216	SD-216	SD-217	SD-217	SD-217	SD-217	SD-217	SD-217	SD-315-C
Sample ID	SD-216-0010	SD-216-0020	SD-216-0030	SD-216-0040	SD-216-0050	SD-216-0060	SD-216-0070	SD-217-0000	SD-217-0010	SD-217-0020	SD-217-0030	SD-217-0040	SD-217-0050	SD-315-0001
Sample Date	4/21/04	4/21/04	4/21/04	4/21/04	4/21/04	4/21/04	4/21/04	4/22/04	4/22/04	4/22/04	4/22/04	4/22/04	4/22/04	8/19/04
Depth (ft BGS)	1 to 2	2 to 3	3 to 4	4 to 5	5 to 5.9	6 to 7	7 to 7.7	0 to 0.9	1 to 1.9	2 to 2.9	3 to 3.7	4 to 4.5	5 to 5.6	1 to 2
Conventionals														
Ammonia (mg/kg dw)														
Percent moisture (%dw)														
Specific gravity (g/cc)														
Total organic carbon (% dw)	1.58	1.43	1.33	1.13	1.02	1.09	0.96	1.73	1.51	1.15	1.09	0.28	0.07	0.21
Total solids (%ww)	61.4	70.4	65.9	73.2	71.6	77.6	75.4	61.2	61.4	78	78.3	82.9	81.2	
Total volatile solids (%ww)														
Grain size (%dw)														
Fractional % >9525 microns														
Fractional % phi >-1 (>2000 microns)	0.500 J							0.600 J	0.100 J					
Fractional % phi 0-1 (500-1000 microns)	2.90 J							4.00 J	4.50 J					
Fractional % phi -1-0 (1000-2000 microns)	0.700 J							1.10 J	0.900 J					
Fractional % phi 10+ (<0.98 micron)	2.40 J							5.10 J	5.00 J					
Fractional % phi 1-2 (250-500 microns)	10.1 J							10.4 J	12.3 J					
Fractional % phi -2-(-1) (2000-4000 microns)														
Fractional % phi 2-3 (125-250 microns)	12.4 J							11.1 J	10.1 J					
Fractional % phi 3-4 (62.5-125 microns)	16.1 J							17.0 J	16.4 J					
Fractional % phi 4-5 (31.2-62.5 microns)	16.2 J							14.1 J	14.7 J					
Fractional % phi 5-6 (15.6-31.2 microns)	11.0 J							13.7 J	13.7 J					
Fractional % phi 6-7 (7.8-15.6 microns)	14.4 J							10.1 J	9.90 J					
Fractional % phi 7-8 (3.9-7.8 microns)	7.10 J							6.70 J	6.60 J					
Fractional % phi 8-9 (1.95-3.9 microns)	4.50 J							3.70 J	3.50 J					
Fractional % phi 9-10 (0.98-1.95 microns)	1.70 J							2.30 J	2.30 J					
Fractional % Sieve 3/8-inch (4750-9525 microns)														
Total clay	8.60 J							11.10 J	10.80 J					
Total Fines														
Total fines (percent silt+clay)	57.3 J							55.7 J	55.7 J					
Total gravel	0.500 J							0.600 J	0.100 J					
Total sand	42.2 J							43.6 J	44.2 J					
Total silt	48.7 J							44.6 J	44.9 J					
Geotechnical														
Atterberg limits classification														
Bulk density (dry) (pcf)														
Bulk density (wet) (pcf)														
Porosity (S.U.)														
Metals (mg/kg dw)														
Aluminum														
Antimony														
Arsenic														4.5 U
Barium														
Beryllium														
Cadmium	1.5							0.7	0.6					0.5 U
Calcium														
Chromium	49.1							143 J	37.4 J					9.96
Cobalt														
Copper	80.8							69.5	72.4					7.32
Iron														
Lead	119							97	106					2.5 U

TABLE A-2
SEDIMENT CORE SAMPLE ANALYTICAL RESULTS
BOEING ISAACSON-THOMPSON SITE
TUKWILA, WASHINGTON

Location	SD-216	SD-216	SD-216	SD-216	SD-216	SD-216	SD-216	SD-217	SD-217	SD-217	SD-217	SD-217	SD-217	SD-315-C
Sample ID	SD-216-0010	SD-216-0020	SD-216-0030	SD-216-0040	SD-216-0050	SD-216-0060	SD-216-0070	SD-217-0000	SD-217-0010	SD-217-0020	SD-217-0030	SD-217-0040	SD-217-0050	SD-315-0001
Sample Date	4/21/04	4/21/04	4/21/04	4/21/04	4/21/04	4/21/04	4/21/04	4/22/04	4/22/04	4/22/04	4/22/04	4/22/04	4/22/04	8/19/04
Depth (ft BGS)	1 to 2	2 to 3	3 to 4	4 to 5	5 to 5.9	6 to 7	7 to 7.7	0 to 0.9	1 to 1.9	2 to 2.9	3 to 3.7	4 to 4.5	5 to 5.6	1 to 2
Magnesium														
Manganese														
Mercury	0.16							0.16	0.13					
Molybdenum														
Nickel														6.92
Potassium														
Selenium														
Silver	1.6							1.3	1.5					0.99 U
Sodium														
Thallium														
Tin														
Vanadium														
Zinc	172							150	141					20.2
PAHs (ug/kg dw)														
1-Methylnaphthalene														
2-Chloronaphthalene														
2-Methylnaphthalene														
Acenaphthene														
Acenaphthylene														
Anthracene														
Benzo(a)anthracene														
Benzo(a)pyrene														
Benzo(b)fluoranthene														
Benzo(g,h,i)perylene														
Benzo(k)fluoranthene														
Chrysene														
cPAHs - mammal - half DL														
Dibenzo(a,h)anthracene														
Dibenzofuran														
Fluoranthene														
Fluorene														
Indeno(1,2,3-cd)pyrene														
Naphthalene														
Phenanthrene														
Pyrene														
Total benzofluoranthenes														
Total HPAHs														
Total LPAHs														
Total PAHs														
Other SVOCs (ug/kg dw)														
1,2,4-Trichlorobenzene														
1,2-Dichlorobenzene														
1,3-Dichlorobenzene														
1,4-Dichlorobenzene														
2,4,5-Trichlorophenol														
2,4,6-Trichlorophenol														
2,4-Dichlorophenol														
2,4-Dimethylphenol														

TABLE A-2
SEDIMENT CORE SAMPLE ANALYTICAL RESULTS
BOEING ISAACSON-THOMPSON SITE
TUKWILA, WASHINGTON

Location	SD-216	SD-216	SD-216	SD-216	SD-216	SD-216	SD-216	SD-217	SD-217	SD-217	SD-217	SD-217	SD-217	SD-315-C
Sample ID	SD-216-0010	SD-216-0020	SD-216-0030	SD-216-0040	SD-216-0050	SD-216-0060	SD-216-0070	SD-217-0000	SD-217-0010	SD-217-0020	SD-217-0030	SD-217-0040	SD-217-0050	SD-315-0001
Sample Date	4/21/04	4/21/04	4/21/04	4/21/04	4/21/04	4/21/04	4/21/04	4/22/04	4/22/04	4/22/04	4/22/04	4/22/04	4/22/04	8/19/04
Depth (ft BGS)	1 to 2	2 to 3	3 to 4	4 to 5	5 to 5.9	6 to 7	7 to 7.7	0 to 0.9	1 to 1.9	2 to 2.9	3 to 3.7	4 to 4.5	5 to 5.6	1 to 2
2,4-Dinitrophenol														
2,4-Dinitrotoluene														
2,6-Dinitrotoluene														
2-Chlorophenol														
2-Methylphenol														
2-Nitroaniline														
2-Nitrophenol														
3,3'-Dichlorobenzidine														
3-Nitroaniline														
4,6-Dinitro-o-cresol														
4-Bromophenyl phenyl ether														
4-Chloro-3-methylphenol														
4-Chloroaniline														
4-Chlorophenyl phenyl ether														
4-Methylphenol														
4-Nitroaniline														
4-Nitrophenol														
Aniline														
Benzoic acid														
Benzyl alcohol														
bis(2-chloroethoxy)methane														
bis(2-chloroethyl)ether														
bis(2-chloroisopropyl)ether														
Carbazole														
Hexachlorobenzene														
Hexachlorobutadiene														
Hexachlorocyclopentadiene														
Hexachloroethane														
Isophorone														
Nitrobenzene														
n-Nitrosodimethylamine														
n-Nitroso-di-n-propylamine														
n-Nitrosodiphenylamine														
Pentachlorophenol														
Phenol														
PCBs (ug/kg dw)														
Aroclor-1016	19 U	20 U	19 U	20 U	19 U	20 U	19 U	19 U	96 U	19 U	19 U	19 U	19 U	11.3 U
Aroclor-1221	19 U	20 U	19 U	20 U	19 U	20 U	19 U	19 U	96 U	19 U	19 U	19 U	19 U	22.6 U
Aroclor-1232	19 U	20 U	19 U	20 U	19 U	20 U	19 U	19 U	96 U	19 U	19 U	19 U	19 U	11.3 U
Aroclor-1242	19 U	20 U	19 U	20 U	19 U	20 U	19 U	19 U	96 U	19 U	19 U	19 U	19 U	11.3 U
Aroclor-1248	60	220	300	190	110	490	370	100	240	64	97	19 U	19 U	11.3 U
Aroclor-1254	120	260	490	230	99	590	380	200	450	170	260	34	19 U	11.3 U
Aroclor-1260	50	47 J	190	63	27	210	160	100	96 U	45	99	19 U	19 U	11.3 U
Aroclor-1262														
Aroclor-1268														
PCB-018														
PCB-028														
PCB-044														

TABLE A-2
SEDIMENT CORE SAMPLE ANALYTICAL RESULTS
BOEING ISAACSON-THOMPSON SITE
TUKWILA, WASHINGTON

Location	SD-216	SD-216	SD-216	SD-216	SD-216	SD-216	SD-216	SD-217	SD-217	SD-217	SD-217	SD-217	SD-217	SD-315-C
Sample ID	SD-216-0010	SD-216-0020	SD-216-0030	SD-216-0040	SD-216-0050	SD-216-0060	SD-216-0070	SD-217-0000	SD-217-0010	SD-217-0020	SD-217-0030	SD-217-0040	SD-217-0050	SD-315-0001
Sample Date	4/21/04	4/21/04	4/21/04	4/21/04	4/21/04	4/21/04	4/21/04	4/22/04	4/22/04	4/22/04	4/22/04	4/22/04	4/22/04	8/19/04
Depth (ft BGS)	1 to 2	2 to 3	3 to 4	4 to 5	5 to 5.9	6 to 7	7 to 7.7	0 to 0.9	1 to 1.9	2 to 2.9	3 to 3.7	4 to 4.5	5 to 5.6	1 to 2
PCB-055														
PCB-066														
PCB-077														
PCB-081														
PCB-101														
PCB-105														
PCB-114														
PCB-118														
PCB-123														
PCB-126														
PCB-128														
PCB-138														
PCB-153														
PCB-156														
PCB-157														
PCB-167														
PCB-169														
PCB-170														
PCB-180														
PCB-187														
PCB-189														
PCB-195														
PCB-206														
PCB-209														
Total PCBs	230	530 J	980	480	240	1,290	910	400	690	280	460	34	19 U	22.6 U
Phthalates (ug/kg dw)														
Bis(2-ethylhexyl)phthalate														
Butyl benzyl phthalate														
Diethyl phthalate														
Dimethyl phthalate														
Di-n-butyl phthalate														
Di-n-octyl phthalate														
Pesticides (ug/kg dw)														
Aldrin														
beta-Chlordane														
Chlordane														
Dieldrin														
Heptachlor epoxide														
Total aldrin/dieldrin														
Total chlordane														
Total DDTs														
VOCs (ug/kg dw)														
Ethylbenzene														
Total xylenes														
Trichloroethene														

TABLE A-2
SEDIMENT CORE SAMPLE ANALYTICAL RESULTS
BOEING ISAACSON-THOMPSON SITE
TUKWILA, WASHINGTON

Location	SD-315-C	SD-315-C
Sample ID	SD-315-0002	SD-315-0003
Sample Date	8/19/04	8/19/04
Depth (ft BGS)	2 to 3	3 to 4
Conventionals		
Ammonia (mg/kg dw)		
Percent moisture (%dw)		
Specific gravity (g/cc)		
Total organic carbon (% dw)	0.3	0.18
Total solids (%ww)		
Total volatile solids (%ww)		
Grain size (%dw)		
Fractional % >9525 microns		
Fractional % phi >-1 (>2000 microns)		
Fractional % phi 0-1 (500-1000 microns)		
Fractional % phi -1-0 (1000-2000 microns)		
Fractional % phi 10+ (<0.98 micron)		
Fractional % phi 1-2 (250-500 microns)		
Fractional % phi -2-(-1) (2000-4000 microns)		
Fractional % phi 2-3 (125-250 microns)		
Fractional % phi 3-4 (62.5-125 microns)		
Fractional % phi 4-5 (31.2-62.5 microns)		
Fractional % phi 5-6 (15.6-31.2 microns)		
Fractional % phi 6-7 (7.8-15.6 microns)		
Fractional % phi 7-8 (3.9-7.8 microns)		
Fractional % phi 8-9 (1.95-3.9 microns)		
Fractional % phi 9-10 (0.98-1.95 microns)		
Fractional % Sieve 3/8-inch (4750-9525 microns)		
Total clay		
Total Fines		
Total fines (percent silt+clay)		
Total gravel		
Total sand		
Total silt		
Geotechnical		
Atterberg limits classification		
Bulk density (dry) (pcf)		
Bulk density (wet) (pcf)		
Porosity (S.U.)		
Metals (mg/kg dw)		
Aluminum		
Antimony		
Arsenic		
Barium		
Beryllium		
Cadmium		
Calcium		
Chromium		
Cobalt		
Copper		
Iron		
Lead		

TABLE A-2
SEDIMENT CORE SAMPLE ANALYTICAL RESULTS
BOEING ISAACSON-THOMPSON SITE
TUKWILA, WASHINGTON

Location	SD-315-C	SD-315-C
Sample ID	SD-315-0002	SD-315-0003
Sample Date	8/19/04	8/19/04
Depth (ft BGS)	2 to 3	3 to 4
Magnesium		
Manganese		
Mercury		
Molybdenum		
Nickel		
Potassium		
Selenium		
Silver		
Sodium		
Thallium		
Tin		
Vanadium		
Zinc		
PAHs (ug/kg dw)		
1-Methylnaphthalene		
2-Chloronaphthalene		
2-Methylnaphthalene		
Acenaphthene		
Acenaphthylene		
Anthracene		
Benzo(a)anthracene		
Benzo(a)pyrene		
Benzo(b)fluoranthene		
Benzo(g,h,i)perylene		
Benzo(k)fluoranthene		
Chrysene		
cPAHs - mammal - half DL		
Dibenzo(a,h)anthracene		
Dibenzofuran		
Fluoranthene		
Fluorene		
Indeno(1,2,3-cd)pyrene		
Naphthalene		
Phenanthrene		
Pyrene		
Total benzofluoranthenes		
Total HPAHs		
Total LPAHs		
Total PAHs		
Other SVOCs (ug/kg dw)		
1,2,4-Trichlorobenzene		
1,2-Dichlorobenzene		
1,3-Dichlorobenzene		
1,4-Dichlorobenzene		
2,4,5-Trichlorophenol		
2,4,6-Trichlorophenol		
2,4-Dichlorophenol		
2,4-Dimethylphenol		

TABLE A-2
SEDIMENT CORE SAMPLE ANALYTICAL RESULTS
BOEING ISAACSON-THOMPSON SITE
TUKWILA, WASHINGTON

Location	SD-315-C	SD-315-C
Sample ID	SD-315-0002	SD-315-0003
Sample Date	8/19/04	8/19/04
Depth (ft BGS)	2 to 3	3 to 4
2,4-Dinitrophenol		
2,4-Dinitrotoluene		
2,6-Dinitrotoluene		
2-Chlorophenol		
2-Methylphenol		
2-Nitroaniline		
2-Nitrophenol		
3,3'-Dichlorobenzidine		
3-Nitroaniline		
4,6-Dinitro-o-cresol		
4-Bromophenyl phenyl ether		
4-Chloro-3-methylphenol		
4-Chloroaniline		
4-Chlorophenyl phenyl ether		
4-Methylphenol		
4-Nitroaniline		
4-Nitrophenol		
Aniline		
Benzoic acid		
Benzyl alcohol		
bis(2-chloroethoxy)methane		
bis(2-chloroethyl)ether		
bis(2-chloroisopropyl)ether		
Carbazole		
Hexachlorobenzene		
Hexachlorobutadiene		
Hexachlorocyclopentadiene		
Hexachloroethane		
Isophorone		
Nitrobenzene		
n-Nitrosodimethylamine		
n-Nitroso-di-n-propylamine		
n-Nitrosodiphenylamine		
Pentachlorophenol		
Phenol		
PCBs (ug/kg dw)		
Aroclor-1016	46 U	67 U
Aroclor-1221	46 U	67 U
Aroclor-1232	91 U	13 U
Aroclor-1242	46 U	6.7 U
Aroclor-1248	46 U	6.7 U
Aroclor-1254	4.6 U	6.7 U
Aroclor-1260	4.6 U	6.7 U
Aroclor-1262		
Aroclor-1268		
PCB-018		
PCB-028		
PCB-044		

TABLE A-2
SEDIMENT CORE SAMPLE ANALYTICAL RESULTS
BOEING ISAACSON-THOMPSON SITE
TUKWILA, WASHINGTON

Location	SD-315-C	SD-315-C
Sample ID	SD-315-0002	SD-315-0003
Sample Date	8/19/04	8/19/04
Depth (ft BGS)	2 to 3	3 to 4
PCB-055		
PCB-066		
PCB-077		
PCB-081		
PCB-101		
PCB-105		
PCB-114		
PCB-118		
PCB-123		
PCB-126		
PCB-128		
PCB-138		
PCB-153		
PCB-156		
PCB-157		
PCB-167		
PCB-169		
PCB-170		
PCB-180		
PCB-187		
PCB-189		
PCB-195		
PCB-206		
PCB-209		
Total PCBs	91 U	67 U
Phthalates (ug/kg dw)		
Bis(2-ethylhexyl)phthalate		
Butyl benzyl phthalate		
Diethyl phthalate		
Dimethyl phthalate		
Di-n-butyl phthalate		
Di-n-octyl phthalate		
Pesticides (ug/kg dw)		
Aldrin		
beta-Chlordane		
Chlordane		
Dieldrin		
Heptachlor epoxide		
Total aldrin/dieldrin		
Total chlordane		
Total DDTs		
VOCs (ug/kg dw)		
Ethylbenzene		
Total xylenes		
Trichloroethene		

CSL = Cleanup Screening Level
mg/kg = milligrams per kilogram
OC = organic carbon
PCBs = polychlorinated biphenyls
SQS = Sediment Quality Standard
TOC = total organic carbon
ft BGS = feet below ground or sediment surface
LAET=Lowest Apparent Effects Threshold
J = Analyte was positively identified and detected; however, concentration is an estimated value because the result is less than the quantitation limit or quality control criteria were not met.
U = Analyte not detected at quantitation limit indicated.
UJ = Analyte not detected at the indicated quantitation limit, which is estimated.

Notes:
1. Organic carbon normalization is performed on samples with TOC between 0.5% and 4%.

2. Organic carbon normalization is performed on samples with TOC between 0.5% and 4%. If TOC is less than 0.5% or greater than 4% then the result is compared to the dry weight equivalent values for the SQS and CSL (typically the Lowest Apparent Effects Threshold (LAET) and the 2nd Lowest Apparent Effects Threshold (2LAET), respectively).

APPENDIX B

Summary of NPDES Stormwater Sample Analytical Results

TABLE B-1
SUMMARY OF NPDES STORMWATER ANALYTICAL RESULTS
BOEING ISAACSON-THOMPSON
TUKWILA, WASHINGTON

TS-1 (Outfall B)	**Current ISGP Benchmark (01/01/2010) (µg/L)**	1ST "10"	2ND "10"	3RD "10"	4TH "10"	1ST "11"	2ND "11"	3RD "11"	4TH "11"	1ST "12"	2ND "12"	3RD "12"	4TH "12"
POG/Sheen	No Visible Sheen	ca	ca	ca	ca	ca	ca	ca	ca	ca	ca	ca	ca
Copper	14	18.1	15.2	37.4	9.6	4.7	13.05	19	17.3	4.2	6.16	23.2	3.6
Zinc	117	580.5	252	710	231.3	276	356.5	300	143.5	80	38.3	131	26.0
pH	5 - 9	6.5	6.4	7.2	6.1	7.0	7.0	7.0	7.0	ca	ca	ca	ca
turbidity	25	1.83	1.14	14.4	2.9	2.76	12.2	8.08	14.8	ca	ca	ca	ca

TS-2 (Outfall A)		1ST "10"	2ND "10"	3RD "10"	4TH "10"	1ST "11"	2ND "11"	3RD "11"	4TH "11"	1ST "12"	2ND "12"	3RD "12"	4TH "12"
POG	No Visible Sheen	ca	ca	ca	ca	ca	ca	ca	ca	ca	ca	ca	ca
Copper	14	10.8	9.7	16.3	11.3	9.6	24.65	13	9.95	10.75	12.3	22.6	12.2
Zinc	117	19.1	25.5	16.5	83.6	442	511	120	94	102.25	94	129	95
pH	5 - 10	6.6	6.4	7.1	6	7.0	7.0	7.0	7.0	ca	ca	ca	ca
turbidity	25	1.67	1.25	2.47	1.77	1.81	5.92	6.63	3.82	ca	ca	ca	ca

APPENDIX C

RI Soil Boring and Test Pit Logs And RI Well As-Builts

Soil Classification System

MAJOR DIVISIONS			GRAPHIC SYMBOL	USCS LETTER SYMBOL[1]	TYPICAL DESCRIPTIONS [2][3]
COARSE-GRAINED SOIL (More than 50% of material is larger than No. 200 sieve size)	GRAVEL AND GRAVELLY SOIL (More than 50% of coarse fraction retained on No. 4 sieve)	CLEAN GRAVEL (Little or no fines)		GW	Well-graded gravel; gravel/sand mixture(s); little or no fines
				GP	Poorly graded gravel; gravel/sand mixture(s); little or no fines
		GRAVEL WITH FINES (Appreciable amount of fines)		GM	Silty gravel; gravel/sand/silt mixture(s)
				GC	Clayey gravel; gravel/sand/clay mixture(s)
	SAND AND SANDY SOIL (More than 50% of coarse fraction passed through No. 4 sieve)	CLEAN SAND (Little or no fines)		SW	Well-graded sand; gravelly sand; little or no fines
				SP	Poorly graded sand; gravelly sand; little or no fines
		SAND WITH FINES (Appreciable amount of fines)		SM	Silty sand; sand/silt mixture(s)
				SC	Clayey sand; sand/clay mixture(s)
FINE-GRAINED SOIL (More than 50% of material is smaller than No. 200 sieve size)	SILT AND CLAY (Liquid limit less than 50)			ML	Inorganic silt and very fine sand; rock flour; silty or clayey fine sand or clayey silt with slight plasticity
				CL	Inorganic clay of low to medium plasticity; gravelly clay; sandy clay; silty clay; lean clay
				OL	Organic silt; organic, silty clay of low plasticity
	SILT AND CLAY (Liquid limit greater than 50)			MH	Inorganic silt; micaceous or diatomaceous fine sand
				CH	Inorganic clay of high plasticity; fat clay
				OH	Organic clay of medium to high plasticity; organic silt
	HIGHLY ORGANIC SOIL			PT	Peat; humus; swamp soil with high organic content

OTHER MATERIALS	GRAPHIC SYMBOL	LETTER SYMBOL	TYPICAL DESCRIPTIONS
PAVEMENT		AC or PC	Asphalt concrete pavement or Portland cement pavement
ROCK		RK	Rock (See Rock Classification)
WOOD		WD	Wood, lumber, wood chips
DEBRIS		DB	Construction debris, garbage

Notes:
1. USCS letter symbols correspond to symbols used by the Unified Soil Classification System and ASTM classification methods. Dual letter symbols (e.g., SP-SM for sand or gravel) indicate soil with an estimated 5-15% fines. Multiple letter symbols (e.g., ML/CL) indicate borderline or multiple soil classifications.
2. Soil descriptions are based on the general approach presented in the Standard Practice for Description and Identification of Soils (Visual-Manual Procedure), outlined in ASTM D 2488. Where laboratory index testing has been conducted, soil classifications are based on the Standard Test Method for Classification of Soils for Engineering Purposes, as outlined in ASTM D 2487.
3. Soil description terminology is based on visual estimates (in the absence of laboratory test data) of the percentages of each soil type and is defined as follows:

Primary Constituent:	> 50% - "GRAVEL," "SAND," "SILT," "CLAY," etc.
Secondary Constituents:	> 30% and ≤ 50% - "very gravelly," "very sandy," "very silty," etc.
	> 15% and ≤ 30% - "gravelly," "sandy," "silty," etc.
Additional Constituents:	> 5% and ≤ 15% - "with gravel," "with sand," "with silt," etc.
	≤ 5% - "with trace gravel," "with trace sand," "with trace silt," etc., or not noted.

4. Soil density or consistency descriptions are based on judgement using a combination of sampler penetration blow counts, drilling or excavating conditions, field tests, and laboratory tests, as appropriate.

Drilling and Sampling Key

SAMPLER TYPE

Code	Description
a	3.25-inch O.D., 2.42-inch I.D. Split Spoon
b	2.00-inch O.D., 1.50-inch I.D. Split Spoon
c	Shelby Tube
d	Grab Sample
e	Single-Tube Core Barrel
f	Double-Tube Core Barrel
g	2.50-inch O.D., 2.00-inch I.D. WSDOT
h	3.00-inch O.D., 2.375-inch I.D. Mod. California
i	Other - See text if applicable
1	300-lb Hammer, 30-inch Drop
2	140-lb Hammer, 30-inch Drop
3	Pushed
4	Vibrocore (Rotosonic/Geoprobe)
5	Other - See text if applicable

SAMPLE NUMBER & INTERVAL

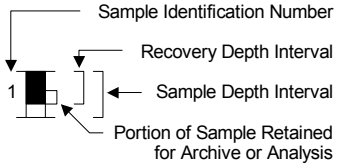

Field and Lab Test Data

Code	Description
PP = 1.0	Pocket Penetrometer, tsf
TV = 0.5	Torvane, tsf
PID = 100	Photoionization Detector VOC screening, ppm
W = 10	Moisture Content, %
D = 120	Dry Density, pcf
-200 = 60	Material smaller than No. 200 sieve, %
GS	Grain Size - See separate figure for data
AL	Atterberg Limits - See separate figure for data
GT	Other Geotechnical Testing
CA	Chemical Analysis

Groundwater

▽ Approximate water level at time of drilling (ATD)

▼ Approximate water level at time other than ATD

LANDAU ASSOCIATES

Isaacson-Thompson RIFS
Tukwila, Washington

Soil Classification System and Key

Figure C-1

MW-01

Drilling Method: Hollow-Stem Auger

Ground Elevation (ft): 19.31 NAVD88 / 21.79 MLLW

Depth (ft)	Sample Number & Interval	Sampler Type	Blows/Foot	PID (ppm)	Graphic Symbol	USCS Symbol	Soil Profile	Water Level
0						AC	Concrete Floor	
		a2	50/6"			SP-SM	Brown, fine SAND with silt and gravel (no odor, no sheen) (very dense, damp) **(FILL)**	
		a2	34	0.0		ML	Grey SILT with fine to medium sand (no odor, no sheen) (very stiff, damp)	
5		a2	51	0.0		SP-SM	Tan, fine to medium SAND with trace silt and gravel and gravel-sized red brick fragment (no odor, no sheen) (medium dense, damp)	
		a2	34			ML	Dark grey SILT (no odor, no sheen) (very stiff, moist) **(ALLUVIUM)**	
		a2	28	0.0		SP	Brown to grey, fine SAND with trace silt (no odor, no sheen) (very loose to medium dense, moist)	
10		a2	24	0.0				
		a2	18	0.0				
		a2	13	0.0			- wet at 12.5 ft	ATD
		a2	10	0.0				
15		a2	10	0.0		SP	Grey, fine SAND (no odor, no sheen) (very loose to medium dense, saturated)	
		a2	22	0.0			- 1/8 inch diameter root at 17.5 ft	
		a2	27	0.0			- 1 inch diameter piece of wood at 19 ft	
20		a2	34	0.0				
		a2	30	0.0				
		a2	38					
25		a2	35					
30								

Monitoring Well Detail

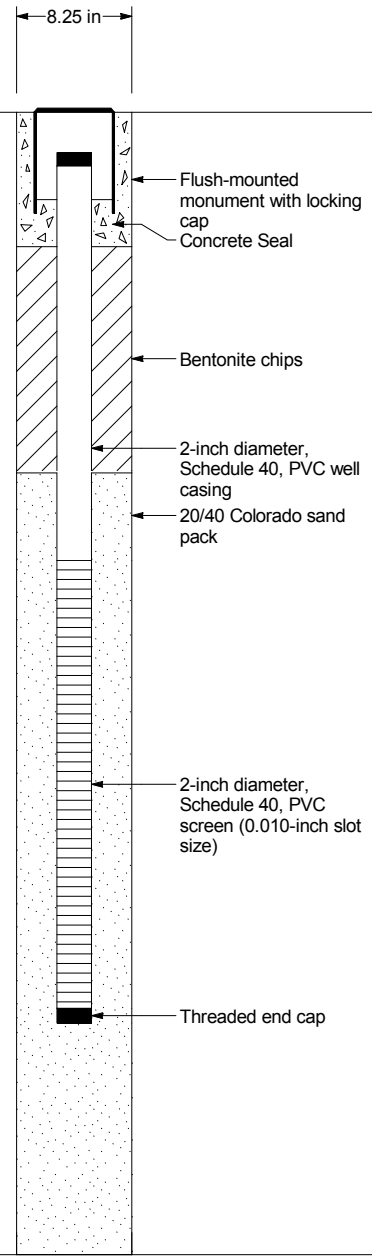

Boring Completed 04/25/11
Total Depth of Boring = 25.5 ft.

Monitoring Well Completed 04/25/11

Notes:
1. Stratigraphic contacts are based on field interpretations and are approximate.
2. Reference to the text of this report is necessary for a proper understanding of subsurface conditions.
3. Refer to "Soil Classification System and Key" figure for explanation of graphics and symbols.

025190.211.012 3/21/14 N:\PROJECTS\025190.211.012.GPJ WELL LOG

LANDAU ASSOCIATES

Isaacson-Thompson RIFS
Tukwila, Washington

Log of Monitoring Well MW-01

Figure C-2

MW-02

Drilling Method: Hollow-Stem Auger

Ground Elevation (ft): 19.41 NAVD88 / 21.89 MLLW

Depth (ft)	Sample Number & Interval	Sampler Type	Blows/Foot	PID (ppm)	Graphic Symbol	USCS Symbol	Soil Profile	Water Level
0						AC	Concrete Floor	
		a2	135	0.1		SP-SM	Light brown, fine to medium SAND with silt and trace gravel (no odor, no sheen) (very dense, damp) **(FILL)**	
		a2	59	0.2		ML / SM	Grey SILT (no odor, no sheen) (very stiff, damp)	
5		a2	41	0.0			Brown, silty, fine to medium SAND with trace gravel (no odor, no sheen) (medium dense, damp)	
		a2	29					
		a2	9	0.3		ML/OL	Black (top 0.5 ft) to grey, clayey SILT (no odor, no sheen) (medium stiff, wet) **(ALLUVIUM)**	ATD
10		a2	9	0.0				
		a2	8	0.2				
						SP	Grey, fine sand with trace SILT (no odor, no sheen) (very loose to loose, moist to wet)	
		a2	12	0.4			- wet/saturated at 13 ft	ATD
		a2	10	0.1				
15		a2	9	0.2		SP	Grey, fine SAND (no odor, no sheen) (very loose to medium dense, wet)	
		a2	18	0.4			- 2 inch thick silt lense at 17.5 ft	
		a2	8	0.0			- 1/4 inch diameter silt nodule at 19 ft	
20		a2	7					
		a2	34	0.0				
		a2	24					
25		a2	20	0.1				
30								

Monitoring Well Detail

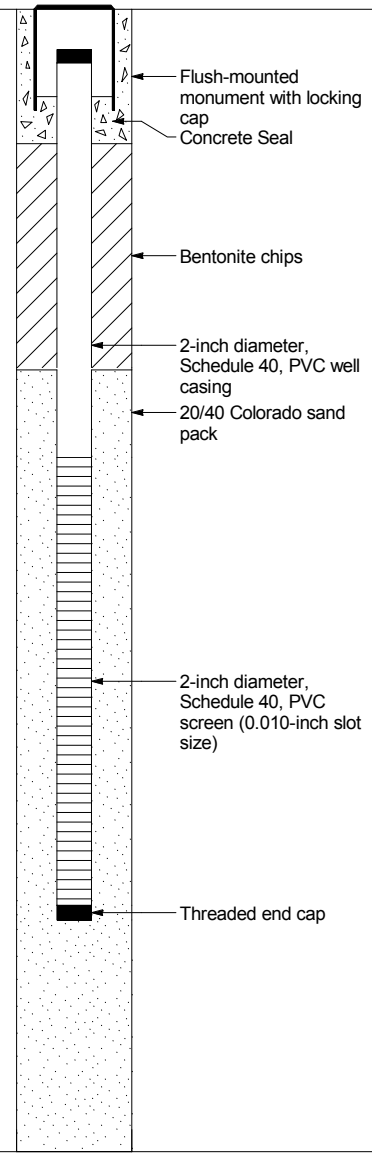

Boring Completed 04/26/11
Total Depth of Boring = 25.5 ft.

Monitoring Well Completed 04/26/11

Notes:
1. Stratigraphic contacts are based on field interpretations and are approximate.
2. Reference to the text of this report is necessary for a proper understanding of subsurface conditions.
3. Refer to "Soil Classification System and Key" figure for explanation of graphics and symbols.

025190.211.012 3/21/14 N:\PROJECTS\025190.211.012.GPJ WELL LOG

LANDAU ASSOCIATES

Isaacson-Thompson RIFS
Tukwila, Washington

Log of Monitoring Well MW-02

Figure C-3

MW-03

Drilling Method: Hollow-Stem Auger

Ground Elevation (ft): 19.35 NAVD88
21.83 MLLW

Depth (ft)	Sample Number & Interval	Sampler Type	Blows/Foot	PID (ppm)	Graphic Symbol	USCS Symbol	Soil Profile	Water Level
0						AC	Concrete Floor	
						SM	Brown, silty, fine to medium SAND with gravel (no odor, no sheen) (very dense, damp) **(FILL)**	
		a2	122	0.1				
		a2	50/6"	0.2			- grades to dark brown at 2 ft - asphalt pieces at 3.5 ft	
5		a2	100	0.0				
						SP-SM	Grades to light brown, fine to medium SAND with silt (no odor, no sheen) (dense, damp)	
		a2	100					
							- brick fragment at 7.5 ft	
		a2	62	0.3		ML	Dark brown to grey SILT (no odor, no sheen) (medium stiff to very stiff, damp) **(ALLUVIUM)**	
10		a2	15	0.0				
		a2	15	0.2				ATD
		a2	8	0.4				
						SM/ML	Grey, sandy SILT grading to silty, fine SAND (no odor, no sheen) (medium stiff and loose, wet)	
		a2	7	0.1				
15		a2	9	0.2			- trace gravel at 15.5 ft	
		a2	10	0.4			- 0.2 inch thick layer of silt at 17 ft	
		a2	9	0.0				
						SP	Dark grey, fine to medium SAND (no odor, no sheen) (very loose to medium dense, wet)	
20		a2	9				- 1/4 inch diameter silt nodules at 20.5 ft	
		a2	18	0.0				
		a2	30					
25		a2	31	0.1				
30								

Monitoring Well Detail

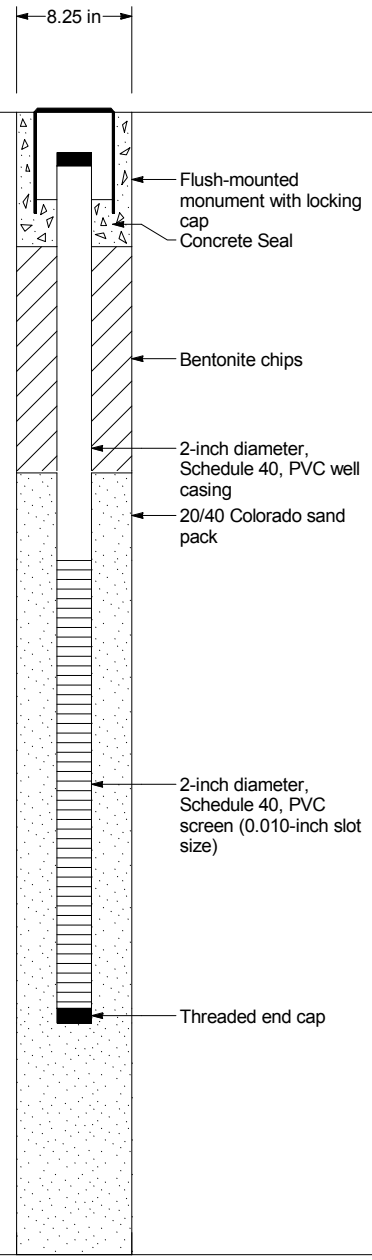

Boring Completed 04/26/11
Total Depth of Boring = 25.5 ft.

Monitoring Well Completed 04/26/11

Notes:
1. Stratigraphic contacts are based on field interpretations and are approximate.
2. Reference to the text of this report is necessary for a proper understanding of subsurface conditions.
3. Refer to "Soil Classification System and Key" figure for explanation of graphics and symbols.

025190.211.012 3/21/14 N:\PROJECTS\025190.211.012.GPJ WELL LOG

LANDAU ASSOCIATES

Isaacson-Thompson RIFS
Tukwila, Washington

Log of Monitoring Well MW-03

Figure
C-4

MW-04

Drilling Method: Hollow-Stem Auger

Ground Elevation (ft): 18.28 NAVD88
20.76 MLLW

Depth (ft)	Sample Number & Interval	Sampler Type	Blows/Foot	PID (ppm)	Graphic Symbol	USCS Symbol	Description
0						AC	Asphalt
						GP	Light gray, sandy, angular fine GRAVEL with trace silt (no odor, no sheen) (damp, loose) **(FILL)**
		d5		0.0			
5						SP	Brown, mottled, fine to medium SAND with trace silt (no odor, no sheen) (damp, loose)
		d5		0.0			
		a1	5	0.0		ML	Gray, SILT with sand (no odor, no sheen) (soft, moist)
		a1	2	0.0		SP	Brown, fine to medium SAND with trace silt and gravel (no odor, no sheen) (damp to moist, loose)
10		a1	9	0.0			
		a1	20	0.0		SP	Dark gray, fine to medium SAND with trace silt (no odor, no sheen) (damp to wet, loose) [native] **(ALLUVIUM)**
		a1	15	0.0			-Color change from dark gray to dark brown
15		a1	14	0.0			
		a1	5	0.0			-Color change from dark brown to dark gray
		a1	17	0.0			
		a1	17	0.0			
20		a1	14	0.0			
		a1	20	0.0			
		a1	12	0.0			
25		a1	14	0.0			
30							

Water Level: ATD

Monitoring Well Detail
(DOE#: BHK-053)

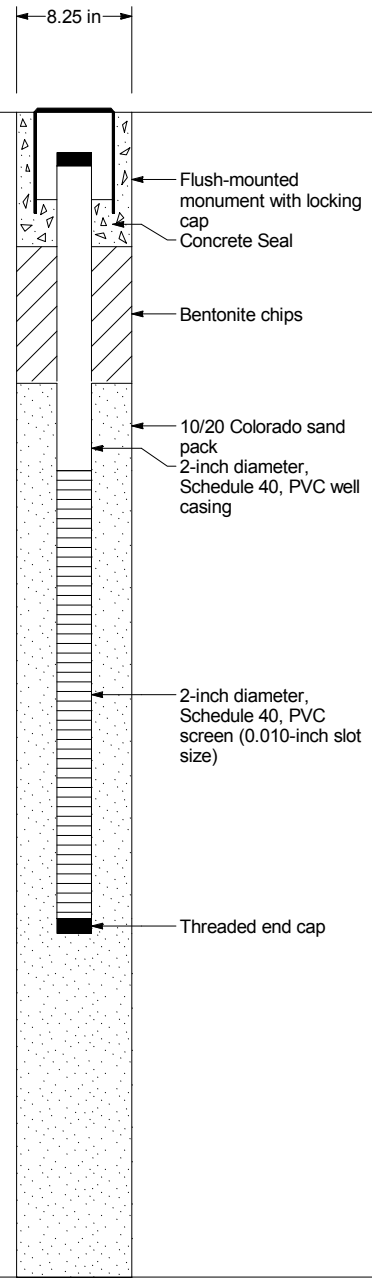

Boring Completed 11/08/11
Total Depth of Boring = 26.0 ft.

Monitoring Well Completed 11/08/11
Total Depth of Monitoring Well = 18.0 ft.

Notes:
1. Stratigraphic contacts are based on field interpretations and are approximate.
2. Reference to the text of this report is necessary for a proper understanding of subsurface conditions.
3. Refer to "Soil Classification System and Key" figure for explanation of graphics and symbols.

025190.211.012 3/21/14 N:\PROJECTS\025190.211.012.GPJ WELL LOG

LANDAU ASSOCIATES

Isaacson-Thompson RIFS
Tukwila, Washington

Log of Monitoring Well MW-04

Figure
C-5

MW-05

Drilling Method: Hollow-Stem Auger

Ground Elevation (ft): 18.93 NAVD88 / 21.41 MLLW

Depth (ft)	Sample Number & Interval	Sampler Type	Blows/Foot	PID (ppm)	Graphic Symbol	USCS Symbol	Description
0						AC	Asphalt
						GP	Brown angular GRAVEL with sand and silt (no odor, no sheen) (dense, damp) **(FILL)**
		d5		0.0		SP-SM	Brown fine to medium SAND with silt and gravel (no odor, no sheen) (dense, damp)
5		d5		0.0		SM	Brown silty, fine to medium SAND with trace gravel (no odor, no sheen) (loose, damp)
		a2	14	0.0			-Air-knife to 8 ft
10		a2	11	0.0		ML	Brown, mottled, SILT with trace sand and organics (no odor, no sheen) (soft, damp) **(ALLUVIUM)**
		a2	8	0.0			
		a2	10	0.0		SM	Brown, mottled, silty, fine SAND with trace organics (no odor, no sheen) (loose, moist to wet)
15		a	9	0.0			
		a2	12	0.0			
		a2	11	0.0		SP-SM	Brown, fine SAND with silt and trace organics (no odor, no sheen) (loose, wet)
		a2	12	0.0		SP	Dark gray, fine to medium SAND (no odor, no sheen) (medium dense, wet)
20		a2	24	0.0			-Color change to dark brown
		a2	24	0.0		SP-SM	Gray, fine SAND with silt (no odor, no sheen) (medium dense, wet)
		a2	18	0.0			
25		a	34	0.0		SP	Gray, fine to medium SAND with trace silt (no odor, no sheen) (medium dense, wet)
30							

Water Level: ATD

Monitoring Well Detail (DOE#: BHK-044)

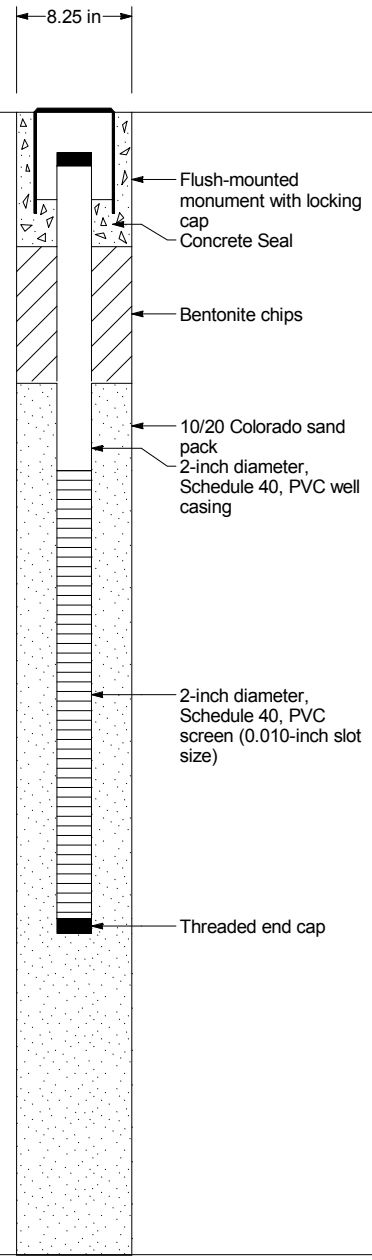

Boring Completed 11/02/11
Total Depth of Boring = 25.5 ft.

Monitoring Well Completed 11/02/11
Total Depth of Monitoring Well = 18.0 ft.

Notes:
1. Stratigraphic contacts are based on field interpretations and are approximate.
2. Reference to the text of this report is necessary for a proper understanding of subsurface conditions.
3. Refer to "Soil Classification System and Key" figure for explanation of graphics and symbols.

025190.211.012 3/21/14 N:\PROJECTS\025190.211.012.GPJ WELL LOG

LANDAU ASSOCIATES

Isaacson-Thompson RIFS
Tukwila, Washington

Log of Monitoring Well MW-05

Figure C-6

MW-06

Drilling Method: Hollow-Stem Auger

Ground Elevation (ft): 19.24 NAVD88
21.72 MLLW

Depth (ft)	Sample Number & Interval	Sampler Type	Blows/Foot	PID (ppm)	Graphic Symbol	USCS Symbol	Description
0						AC	Asphalt
						GP	Brown, GRAVEL with sand and silt (no odor, no sheen) (dense, damp) **(FILL)**
						SP	Light brown, fine to medium SAND with trace silt (no odor, no sheen) (medium dense, damp)
		d5		0.0			
5		d5		0.0			
							-Airknifed to 8 ft
		a2	12	0.0		ML	Brown, mottled, SILT with sand and trace organics (no odor, no sheen) (soft, damp)
10		a2	11	0.0		SP-SM	Brown, fine SAND with silt (no odor, no sheen) (loose, damp) **(ALLUVIUM)**
		a2	9	0.0			
		a2	9	0.0			
							-Color change to gray
15		a2	9	0.0			
		a2	10	0.0			
		a2	19	0.0		SP	Dark gray, fine SAND with trace silt (no odor, no sheen) (loose, wet)
		a2	30	21.3			-Odor at 19 ft with slight sheen
20		a2	20	25.0			-Lenses of apparent gray stained sand with sheen and odor from 20 to 21.5 ft
		a2	25	2.2			
		a2	31	0.3		SP-SM	Gray, fine to medium SAND with silt to trace silt and wood fragments (no odor, no sheen) (medium dense, wet)
							-1 inch silt lens at 24 ft
25		a2	75	0.0			-2 inch silt lens at 25 ft
30							

Water Level: ATD

Monitoring Well Detail
(DOE#: BHK-045)

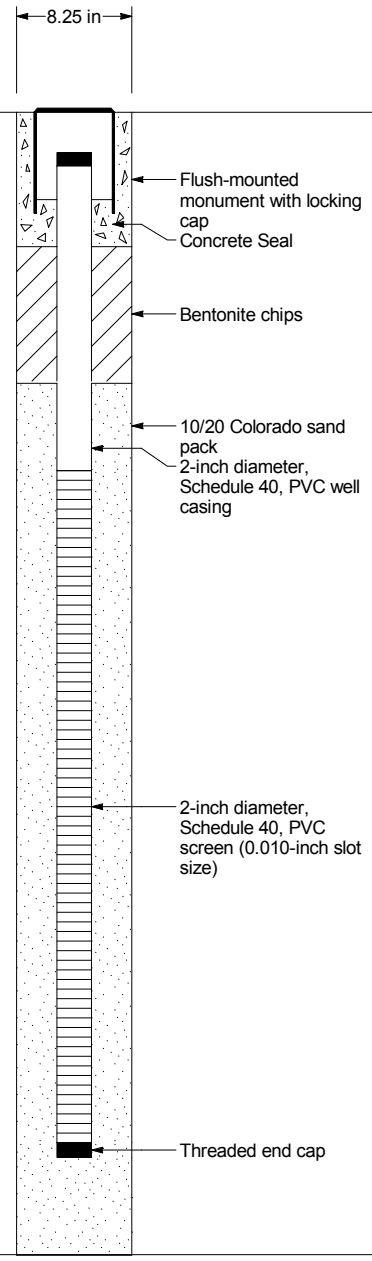

Boring Completed 11/02/11
Total Depth of Boring = 25.5 ft.

Monitoring Well Completed 11/02/11
Total Depth of Monitoring Well = 23.0 ft.

Notes:
1. Stratigraphic contacts are based on field interpretations and are approximate.
2. Reference to the text of this report is necessary for a proper understanding of subsurface conditions.
3. Refer to "Soil Classification System and Key" figure for explanation of graphics and symbols.

025190.211.012 3/21/14 N:\PROJECTS\025190.211.012.GPJ WELL LOG

LANDAU ASSOCIATES

Isaacson-Thompson RIFS
Tukwila, Washington

Log of Monitoring Well MW-06

Figure
C-7

MW-07

SAMPLE DATA				SOIL PROFILE			GROUNDWATER
Depth (ft)	Sample Number & Interval	Sampler Type	Blows/Foot	PID (ppm)	Graphic Symbol	USCS Symbol	Drilling Method: Hollow-Stem Auger Ground Elevation (ft): 19.14 NAVD88 21.62 MLLW	Water Level
0						AC	Asphalt	
						SP-SM	Brown, fine SAND with silt and trace gravel (no odor, no sheen) (medium dense, moist) **(FILL)**	
		d5		0.0				
5						SP	Brown, fine SAND with trace organics (no odor, no sheen) (medium dense, damp) **(ALLUVIUM)**	
		d5		0.0				
						SP-SM	-Air-knife to 6.5 ft	
		a1		0.0			Brown, fine SAND with silt (no odor, no sheen) (loose, damp)	
		a1		0.0				
10						SM	Brown, silt, fine SAND (no odor, no sheen) (loose, damp)	
		a1		0.0		SP-SM		
							Brown, fine SAND with silt (no odor, no sheen) (loose, wet)	
		a1		0.0				
							-Color change to gray at 12.5 ft	ATD
		a1		0.0				
		a1		0.0				
15		a1		0.0				
		a1		0.0				
		a1		0.0		SP	Dark brown, fine to medium SAND with trace silt (no odor, no sheen) (loose, wet)	
		a1		0.0				
20		a1		0.0				
		a1		0.0				
		a1		0.0				
25		a1		0.0				
30								

Monitoring Well Detail
(DOE#: BHK-047)

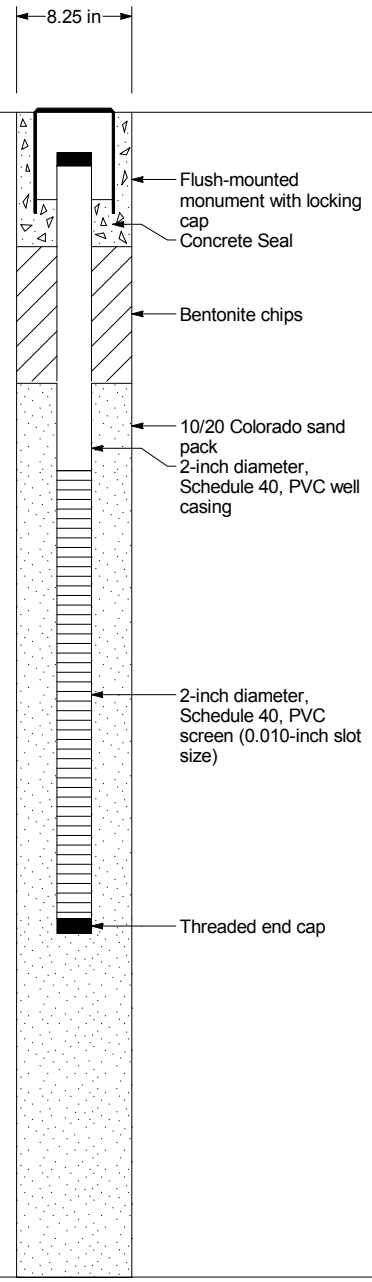

Boring Completed 11/04/11
Total Depth of Boring = 26.0 ft.

Monitoring Well Completed 11/04/11
Total Depth of Monitoring Well = 18.0 ft.

Notes:
1. Stratigraphic contacts are based on field interpretations and are approximate.
2. Reference to the text of this report is necessary for a proper understanding of subsurface conditions.
3. Refer to "Soil Classification System and Key" figure for explanation of graphics and symbols.

025190.211.012 3/21/14 N:\PROJECTS\025190.211.012.GPJ WELL LOG

LANDAU ASSOCIATES

Isaacson-Thompson RIFS
Tukwila, Washington

Log of Monitoring Well MW-07

Figure
C-8

MW-08

Drilling Method: Hollow-Stem Auger

Ground Elevation (ft): 18.85 NAVD88
21.33 MLLW

Depth (ft)	Sample Number & Interval	Sampler Type	Blows/Foot	PID (ppm)	Graphic Symbol	USCS Symbol	Soil Profile	Water Level
0						AC	Concrete	
						GP	Brown, angular, GRAVEL with sand and silt (no odor, no sheen) (dense, damp)	
						SP	**(FILL)**	
		a1	29	0.0			Brown, fine to medium SAND with trace silt and gravel (no odor, no sheen) (medium dense, damp)	
		a1	22	0.0		SP-SM	Brown, fine SAND with silt and gravel (no odor, no sheen) (loose, damp)	
5		a1	15	0.0		SP-SM	Brown, fine SAND with silt (no odor, no sheen) (loose, damp)	
		a1	6	0.0				
		a1	6	0.0				
10		a1	5	0.0				
		a1	4	0.0		SM	Brown, mottled, silty, fine SAND (no odor, no sheen) (loose, damp)	
						SP	**(ALLUVIUM)**	
		a1	4	0.0			Brown, fine SAND with trace silt (no odor, no sheen) (loose, wet)	ATD
		a1	4	0.0			-Color change to gray at 14 ft	
15		a1	7	0.0				
		a1	12	0.0			-1 inch silt lens, color change to dark gray at 18 ft	
		a1	8	0.0				
20		a1	10	0.0		SP	Dark gray, fine to medium SAND with trace silt (no odor, no sheen) (loose, wet)	
		a1	8	0.0				
		a1	10	0.0				
25		a1	11	0.0				
30								

Monitoring Well Detail
(DOE#: BHK-049)

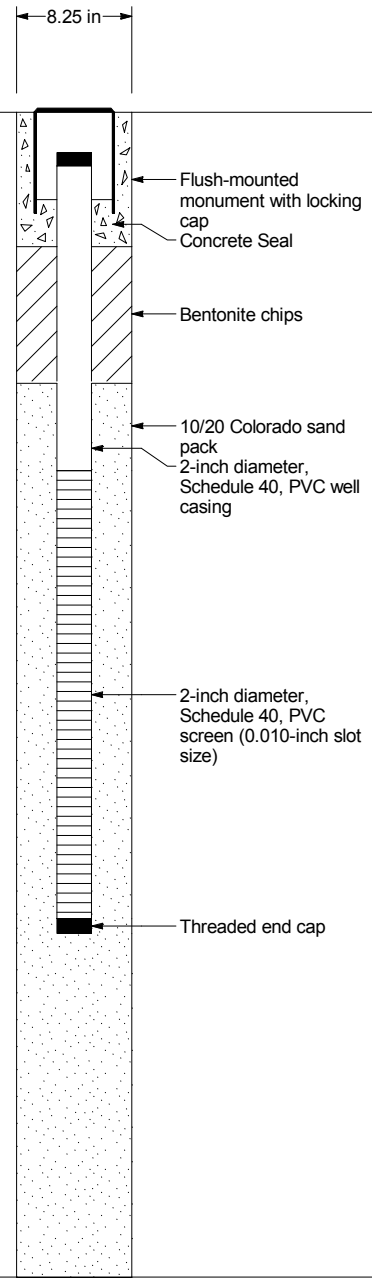

Boring Completed 11/07/11
Total Depth of Boring = 26.0 ft.

Monitoring Well Completed 11/07/11
Total Depth of Monitoring Well = 18.0 ft.

Notes:
1. Stratigraphic contacts are based on field interpretations and are approximate.
2. Reference to the text of this report is necessary for a proper understanding of subsurface conditions.
3. Refer to "Soil Classification System and Key" figure for explanation of graphics and symbols.

025190.211.012 3/21/14 N:\PROJECTS\025190.211.012.GPJ WELL LOG

LANDAU ASSOCIATES

Isaacson-Thompson RIFS
Tukwila, Washington

Log of Monitoring Well MW-08

Figure
C-9

MW-09

Drilling Method: Hollow-Stem Auger

Ground Elevation (ft): 18.65 NAVD88 / 21.13 MLLW

Depth (ft)	Sample Number & Interval	Sampler Type	Blows/Foot	PID (ppm)	Graphic Symbol	USCS Symbol	Soil Profile	Water Level
0						AC	Asphalt	
						SP-SM	Dark gray, fine SAND with silt and gravel (no odor, no sheen) (medium dense, moist) **(FILL)**	
		d5		0.1				
5						SP	Dark gray, gravelly, fine SAND with silt (no odor, no sheen) (medium dense, moist)	
		d5		0.1				
						SP-SM	-Airknifed to 6.5 ft	
		a1	23	0.0		SP-SM	Brown with thin layers of gray, fine SAND with silt (no odor, no sheen) (damp, medium dense)	
		a1	11	0.0			Brown, fine to medium SAND with silt to silty and trace gravel (no odor, no sheen) (damp, loose)	
10		a1	11	0.0				
						SM SP	Gray, silty, fine SAND with trace organics (no odor, no sheen) (loose, damp) **(ALLUVIUM)**	
		a1	11	0.0				ATD
						SP-SM	Dark gray, fine to medium SAND with trace silt (no odor, no sheen) (loose, wet)	
		a1 a1	12	0.0 0.0		SP	Dark gray, medium coarse SAND with silt (no odor, no sheen) (loose, wet)	
15		a1	6	0.0			Brown, fine to medium SAND with trace silt (no odor, no sheen) (loose, wet)	
		a1	7	0.0				
		a1	7	0.0		SM	Gray, silty, fine SAND with organics and wood fragments (no odor, no sheen) (loose, wet)	
		a1	6	0.4		SP-SM	Gray to black, fine to medium SAND with silt and trace organics (no odor, no sheen) (loose, wet)	
20		a1	7	0.0				
		a1	7	0.0		ML	Black, SILT with sand, organics, and wood fragments (slight organic odor, no sheen) (soft, wet)	
		a1	6	0.0				
25		a1	8	0.0		SM	Black, silty, fine SAND with organics, wood fragments, and trace gravel (slight organic odor, no sheen) (loose, wet)	
30								

Monitoring Well Detail (DOE#: BHK-048)

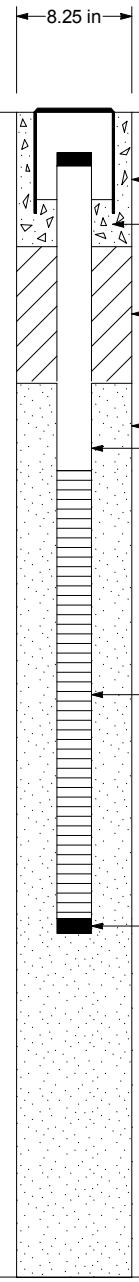

Boring Completed 11/04/11
Total Depth of Boring = 26.0 ft.

Monitoring Well Completed 11/04/11
Total Depth of Monitoring Well = 18.0 ft.

Notes:
1. Stratigraphic contacts are based on field interpretations and are approximate.
2. Reference to the text of this report is necessary for a proper understanding of subsurface conditions.
3. Refer to "Soil Classification System and Key" figure for explanation of graphics and symbols.

025190.211.012 3/21/14 N:\PROJECTS\025190.211.012.GPJ WELL LOG

LANDAU ASSOCIATES

Isaacson-Thompson RIFS
Tukwila, Washington

Log of Monitoring Well MW-09

Figure C-10

MW-10

SAMPLE DATA				SOIL PROFILE			GROUNDWATER
Depth (ft)	Sample Number & Interval	Sampler Type	Blows/Foot	PID (ppm)	Graphic Symbol	USCS Symbol	Drilling Method: Hollow-Stem Auger Ground Elevation (ft): 18.20 NAVD88 20.68 MLLW	Water Level
0						AC	Concrete	
		d5		0.2		SP-SM	Brown, fine to medium SAND with silt and gravel (no odor, no sheen) (medium dense, damp) **(FILL)**	
5		d5		0.0		SP	Light brown, fine to medium SAND with trace silt (no odor, no sheen) (loose, damp) -Airknifed to 6.5 ft	
		a1	14	0.0				
		a1	6	0.0				
10		a1	6	0.0		SP-SM	Brown, fine to medium SAND with silt and trace gravel (no odor, no sheen) (loose, damp)	
		a1	4	0.0		SM	Gray, silty, fine SAND with organics (no odor, no sheen) (loose, damp) **(ALLUVIUM)**	
		a1	2	0.0		WD	Wood chunks	ATD
		a1		0.0				
15		a1		0.0				
		a1		0.0				
		a1		0.0		SP	Dark gray, fine to medium SAND with trace silt and organics (no odor, no sheen) (loose, wet)	
20		a1		0.0				
		a1		0.0				
		a1		0.0				
25		a1		0.0				
30								

Monitoring Well Detail
(DOE#: BHK-051)

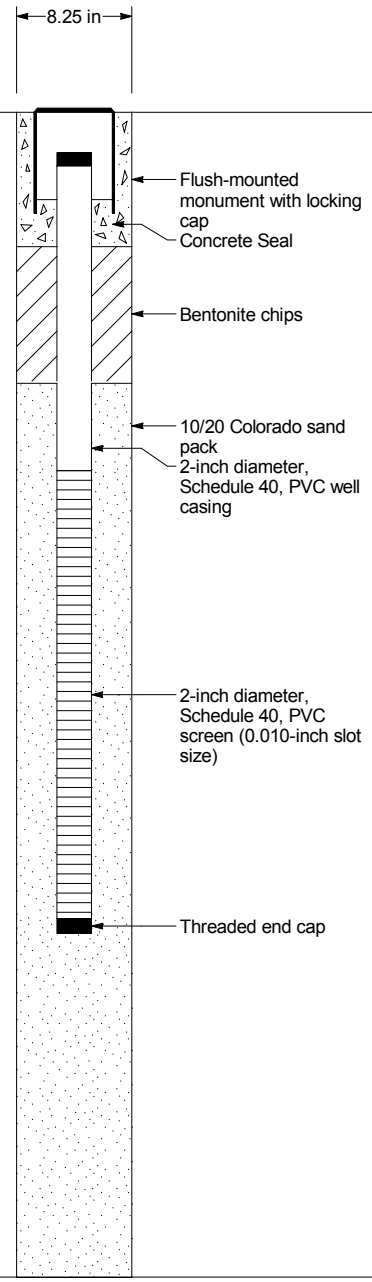

Boring Completed 11/07/11
Total Depth of Boring = 26.0 ft.

Monitoring Well Completed 11/07/11
Total Depth of Monitoring Well = 18.0 ft.

Notes:
1. Stratigraphic contacts are based on field interpretations and are approximate.
2. Reference to the text of this report is necessary for a proper understanding of subsurface conditions.
3. Refer to "Soil Classification System and Key" figure for explanation of graphics and symbols.

025190.211.012 3/21/14 N:\PROJECTS\025190.211.012.GPJ WELL LOG

LANDAU ASSOCIATES

Isaacson-Thompson RIFS
Tukwila, Washington

Log of Monitoring Well MW-10

Figure
C-11

MW-11

SAMPLE DATA				SOIL PROFILE			GROUNDWATER
Depth (ft)	Sample Number & Interval	Sampler Type	Blows/Foot	PID (ppm)	Graphic Symbol	USCS Symbol	Drilling Method: Hollow-Stem Auger Ground Elevation (ft): 18.64 NAVD88 21.12 MLLW	Water Level
0						AC	Concrete	
						SM	Brown, silty, fine to medium SAND with gravel (no odor, no sheen) (dense, damp) **(FILL)**	
		d5		0.1				
5						SP	Brown, gravelly, fine to medium SAND with silt (no odor, no sheen) (medium dense, damp)	
		d5		0.1				
		a1		0.0		SP-SM	-Airknifed to 6.5 ft	
							Gray, fine to medium SAND with silt and gravel (no odor, no sheen) (medium dense, damp)	
		a1		0.0				
						SP-SM	-Plastic sheet in sampler at 6.5 ft	
10		a1		0.0			Gray, fine SAND with silt and trace gravel (no odor, no sheen) (loose, damp)	
		a1		0.0				
						SP-SM	Dark gray, fine SAND with silt and organics (no odor, no sheen) (loose, wet) **(ALLUVIUM)**	ATD
		a1		0.0				
		a1		0.0				
15		a1		0.0				
		a1		0.0				
		a1		0.0				
						SP	Gray, fine to medium SAND with trace silt (no odor, no sheen) (loose, wet)	
		a1		0.0				
20		a1		0.0				
		a1		0.0				
		a1		0.0		ML	Black, SILT with organics (slight organic sheen, no odor) (soft, wet)	
		a1		0.0				
6								
25		a1		0.0				
30								

Monitoring Well Detail
(DOE#: BHK-050)

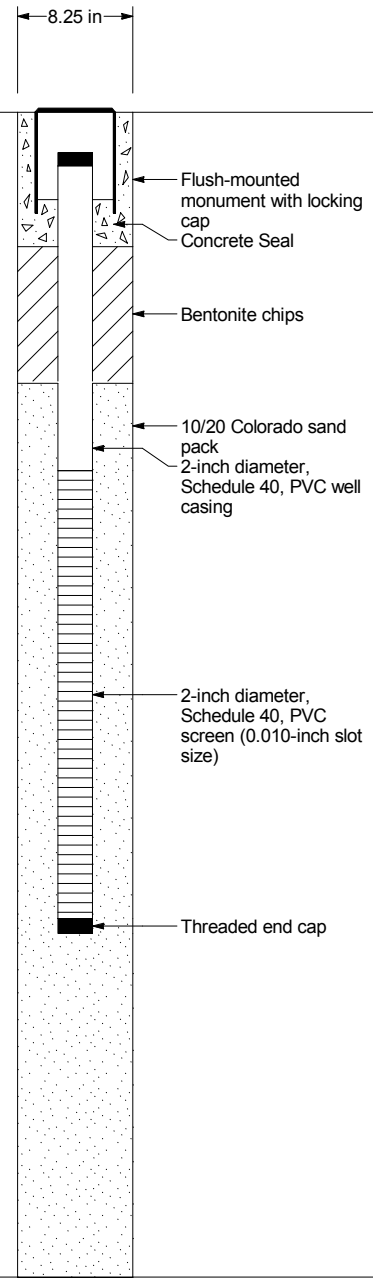

Boring Completed 11/07/11
Total Depth of Boring = 26.0 ft.

Monitoring Well Completed 11/07/11
Total Depth of Monitoring Well = 18.0 ft.

Notes:
1. Stratigraphic contacts are based on field interpretations and are approximate.
2. Reference to the text of this report is necessary for a proper understanding of subsurface conditions.
3. Refer to "Soil Classification System and Key" figure for explanation of graphics and symbols.

025190.211.012 3/21/14 N:\PROJECTS\025190.211.012.GPJ WELL LOG

LANDAU ASSOCIATES

Isaacson-Thompson RIFS
Tukwila, Washington

Log of Monitoring Well MW-11

Figure
C-12

MW-12

Drilling Method: Hollow-Stem Auger

Ground Elevation (ft): 18.18 NAVD88
20.66 MLLW

Depth (ft)	Sample Number & Interval	Sampler Type	Blows/Foot	PID (ppm)	Graphic Symbol	USCS Symbol	Soil Profile	Water Level
0						AC	Asphalt	
						SP-SM	Light brown, fine to medium SAND with silt and trace gravel (no odor, no sheen) (medium dense, damp) **(FILL)**	
		a1	36	0.0				
		a1	36	0.0		SP	Brown, fine to medium SAND with trace silt (no odor, no sheen) (loose, damp)	
5		a1	10	0.0				
		a1	20	0.0		SP-SM	Brown, fine to medium SAND with silt (no odor, no sheen) (loose, damp)	
		a1	9	0.0				
10		a1	8	0.0				
		a1	4	0.0				ATD
		a1	2	0.0		SP	Gray, fine to medium SAND with trace silt (no odor, no sheen) (loose, wet)	
		a1		0.0			-trace wood fragments **(ALLUVIUM)**	
15		a1	1	0.0				
		a1	2	0.0				
		a1	6	0.0				
		a1		3.7		SM	Black, silty, fine to medium SAND with organics and trace gravel (organic odor, no sheen) (loose, wet)	
		a1	6					
20		a1	4	1.6		SP	Gray to black, fine to medium SAND (slight organic odor, no sheen) (loose, wet)	
		a1	4	0.8				
		a1	10	0.1		ML	Black, SILT with fine sand, wood fragments, and organics (no odor, no sheen) (soft, moist to wet)	
						SP-SM	Black, fine to medium SAND with silt and trace organics (no odor, no sheen) (loose, wet)	
25		a1	6	0.0				
30								

Monitoring Well Detail
(DOE#: BHK-046)

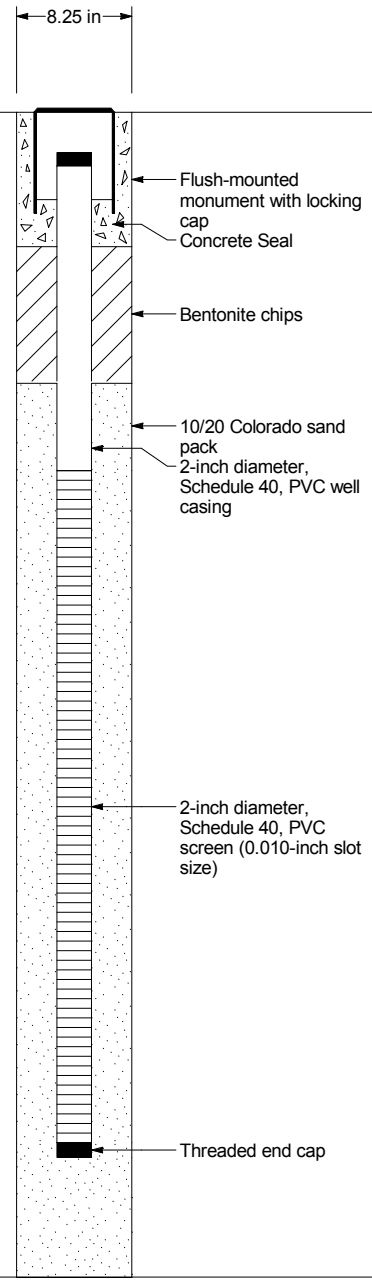

Boring Completed 11/03/11
Total Depth of Boring = 26.0 ft.

Monitoring Well Completed 11/03/11
Total Depth of Monitoring Well = 23.0 ft.

Notes:
1. Stratigraphic contacts are based on field interpretations and are approximate.
2. Reference to the text of this report is necessary for a proper understanding of subsurface conditions.
3. Refer to "Soil Classification System and Key" figure for explanation of graphics and symbols.

025190.211.012 3/21/14 N:\PROJECTS\025190.211.012.GPJ WELL LOG

LANDAU ASSOCIATES

Isaacson-Thompson RIFS
Tukwila, Washington

Log of Monitoring Well MW-12

Figure
C-13

MW-13/SB-04

SAMPLE DATA					SOIL PROFILE			GROUNDWATER
Depth (ft)	Sample Number & Interval	Sampler Type	Blows/Foot	PID (ppm)	Graphic Symbol	USCS Symbol	Drilling Method: Hollow-Stem Auger Ground Elevation (ft): 17.17 NAVD88 19.65 MLLW	Water Level
0						AC	Asphalt	
						DB	Concrete, bricks, and rubble **(FILL)**	
		d5		0.0		SP-SM	Brown, fine to medium SAND with silt and gravel (no odor, no sheen) (medium dense, damp)	
							-Airknifed to 5 ft	
5				0.0		SM	Brown, silty, fine SAND with 0.5 inch dispersed silt lenses (no odor, no sheen) (medium dense, damp) **(ALLUVIUM)**	
		d3		0.0 0.0 0.0		SP-SM	Brown, fine SAND with silt (no odor, no sheen) (medium dense, damp to wet)	
10							-Color change to gray and wet at 10.5 ft	ATD
		d3		0.0 0.0				
15								
		d3		0.0		SP	Gray, fine to medium SAND with trace silt (no odor, no sheen) (medium dense, wet)	
20								
		d3		0.0				
25							-Monitoring well MW-13 installed in same location as soil boring SB-4	
30								

Monitoring Well Detail
(DOE#: BHK-064)

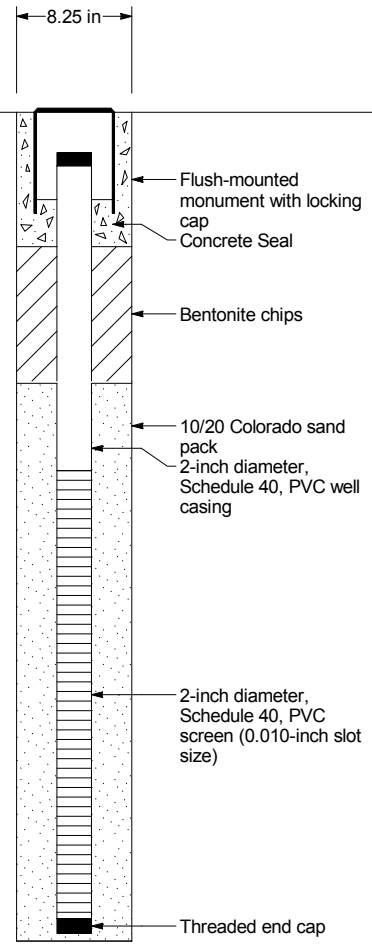

Boring Completed 11/03/11
Total Depth of Boring = 25.0 ft.

Monitoring Well Completed 11/14/11
Total Depth of Monitoring Well = 18.0 ft.

Notes:
1. Stratigraphic contacts are based on field interpretations and are approximate.
2. Reference to the text of this report is necessary for a proper understanding of subsurface conditions.
3. Refer to "Soil Classification System and Key" figure for explanation of graphics and symbols.

025190.211.012 3/21/14 N:\PROJECTS\025190.211.012.GPJ WELL LOG

LANDAU ASSOCIATES

Isaacson-Thompson RIFS
Tukwila, Washington

Log of Monitoring Well MW-13/SB-04

Figure
C-14

MW-14

Drilling Method: Hollow-Stem Auger

Ground Elevation (ft): 17.71 NAVD88
20.19 MLLW

Depth (ft)	Sample Number & Interval	Sampler Type	Blows/Foot	PID (ppm)	Graphic Symbol	USCS Symbol	Soil Profile	Water Level
0						AC	Asphalt	
						SP-SM	Gray, fine to medium SAND with silt and trace gravel (no odor, no sheen) (medium dense, moist)	
		a1	15	0.0			**(FILL)**	
						SP-SM	-Asphalt chunk at 2.5 ft	
		a1	4	0.0			Brown, fine SAND with silt (no odor, no sheen) (loose, damp)	
5		a1	4	0.0				
		a1	6	0.0			-4 inch brown sandy SILT lens at 7.5 ft	
		a1	5	0.0				
10		a1	5	0.0				
		a1	3	0.0			-Color change to gray at 11 ft	ATD
		a1	7	0.0		SP	Dark brown, fine to medium SAND with trace silt and organics (no odor, no sheen) (loose, wet)	
		a1		0.0				
15		a1	5	0.0			**(ALLUVIUM)**	
		a1	9	0.0				
		a1	10	0.0			-Color change to dark gray at 17 ft -Grades to medium SAND	
		a1	13	0.0				
20		a1	7	0.0				
		a1	9	0.0				
		a1	16	0.0				
25		a1	9	0.0				
30								

Monitoring Well Detail
(DOE#: BHK-054)

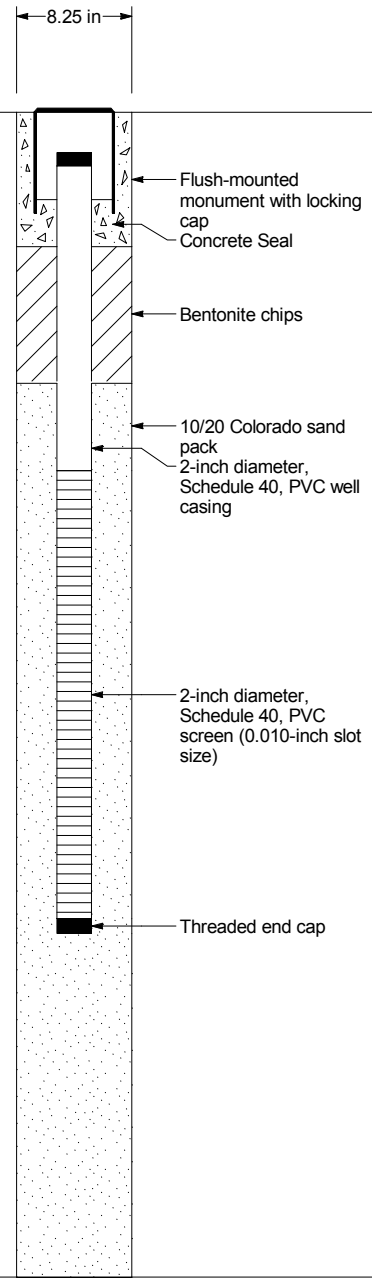

Boring Completed 11/08/11
Total Depth of Boring = 26.0 ft.

Monitoring Well Completed 11/08/11
Total Depth of Monitoring Well = 18.0 ft.

Notes:
1. Stratigraphic contacts are based on field interpretations and are approximate.
2. Reference to the text of this report is necessary for a proper understanding of subsurface conditions.
3. Refer to "Soil Classification System and Key" figure for explanation of graphics and symbols.

025190.211.012 3/21/14 N:\PROJECTS\025190.211.012.GPJ WELL LOG

LANDAU ASSOCIATES

Isaacson-Thompson RIFS
Tukwila, Washington

Log of Monitoring Well MW-14

Figure
C-15

MW-15

Drilling Method: Hollow-Stem Auger

Ground Elevation (ft): 17.89 NAVD88
20.37 MLLW

Depth (ft)	Sample Number & Interval	Sampler Type	Blows/Foot	PID (ppm)	USCS Symbol	Soil Profile
0					AC	Concrete
					SP	Brown, medium SAND with gravel and brick fragments (no odor, no sheen) (loose, damp)
		a1	6	0.0	SP-SM	**(FILL)**
		a1	6	0.0		Brown, fine SAND with silt (no odor, no sheen) (loose, damp)
5		a1	6	0.0		
		a1	3	0.0		
					SP	Dark brown, fine to medium SAND with trace silt (no odor, no sheen) (loose, damp to moist)
		a1	3	0.0		
10		a1	2	0.0	SM	Gray, mottled, silty, fine SAND (no odor, no sheen) (loose, moist to wet) **(ALLUVIUM)**
		a1	1	0.0		-Trace organics at 12 ft
		a1	1	0.0	SP-SM	Brown, fine SAND with silt (no odor, no sheen) (loose, wet)
15		a1	4	0.0	SM	Gray, silty, fine SAND (no odor, no sheen) (soft, wet)
		a1	6	0.0		-Wood chunk at 15.5 ft
		a1	5	0.0		
		a1	9	0.0	SP-SM	Gray, fine SAND with silt (no odor, no sheen) (loose, wet)
20		a1	4	0.0		-dispersed wood debris at 20 ft
					SP	Dark gray, medium to coarse SAND with trace silt (no odor, no sheen) (loose, wet)
		a1	9	0.0		
		a1	10	0.0		
25		a1	6	0.0		
30						

Water Level: ATD

Monitoring Well Detail
(DOE#: BHK-065)

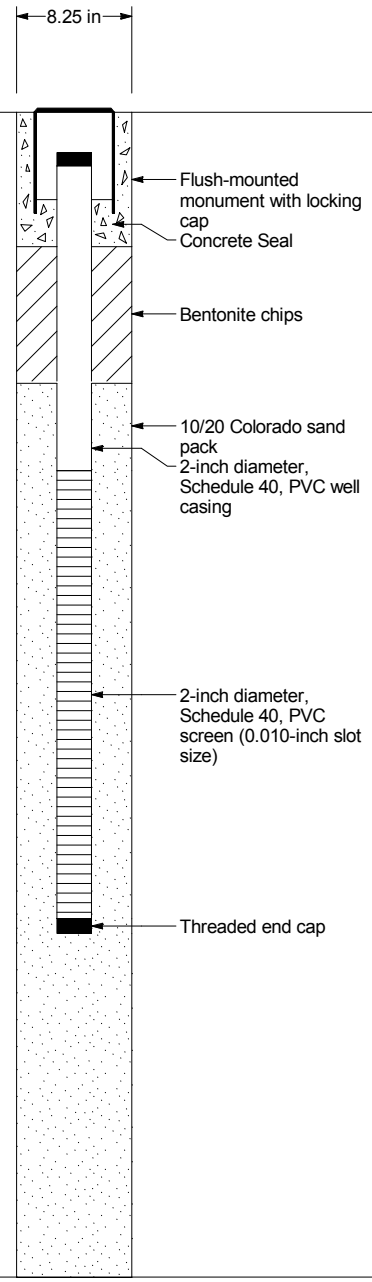

Boring Completed 11/15/11
Total Depth of Boring = 26.0 ft.

Monitoring Well Completed 11/15/11
Total Depth of Monitoring Well = 18.0 ft.

Notes:
1. Stratigraphic contacts are based on field interpretations and are approximate.
2. Reference to the text of this report is necessary for a proper understanding of subsurface conditions.
3. Refer to "Soil Classification System and Key" figure for explanation of graphics and symbols.

025190.211.012 3/21/14 N:\PROJECTS\025190.211.012.GPJ WELL LOG

LANDAU ASSOCIATES

Isaacson-Thompson RIFS
Tukwila, Washington

Log of Monitoring Well MW-15

Figure
C-16

MW-16

Drilling Method: Hollow-Stem Auger

Ground Elevation (ft): 18.10 NAVD88
20.58 MLLW

Depth (ft)	Sample Number & Interval	Sampler Type	Blows/Foot	PID (ppm)	USCS Symbol	Soil Profile
0					AC	Asphalt
					SP-SM	Brown, fine SAND with silt and trace gravel and brick fragments (no odor, no sheen) (loose, damp) [fill] **(FILL)**
		a1	10	0.0		
		a1	8	0.0	SP-SM	Brown, fine SAND with silt lenses (no odor, no sheen) (damp, loose) **(ALLUVIUM)**
5		a1	6	0.0		
		a1	4	0.0		-Silty lens at 7 ft
		a1	2	0.0		
10		a1	2	0.0		-Silty lens at 10 ft
		a1	10	0.0		
		a1		0.0	SP	Brown, fine to medium SAND with trace silt (no odor, no sheen) (loose, wet)
		a1	8	0.0		-Color change to dark gray at 13 ft
15		a1	6	0.0		
		a1	4	0.0		-Fine sand lens at 15.5 ft -Wood fragments at 16 ft
		a1	4	0.0		
		a1	10	0.0		-Silt lens at 19 ft
20		a1	11	0.0		
		a1	6	0.0		
		a1	6	0.0		
25		a1	11	0.0		
30						

Water Level: ATD

Monitoring Well Detail
(DOE#: BHK-059)

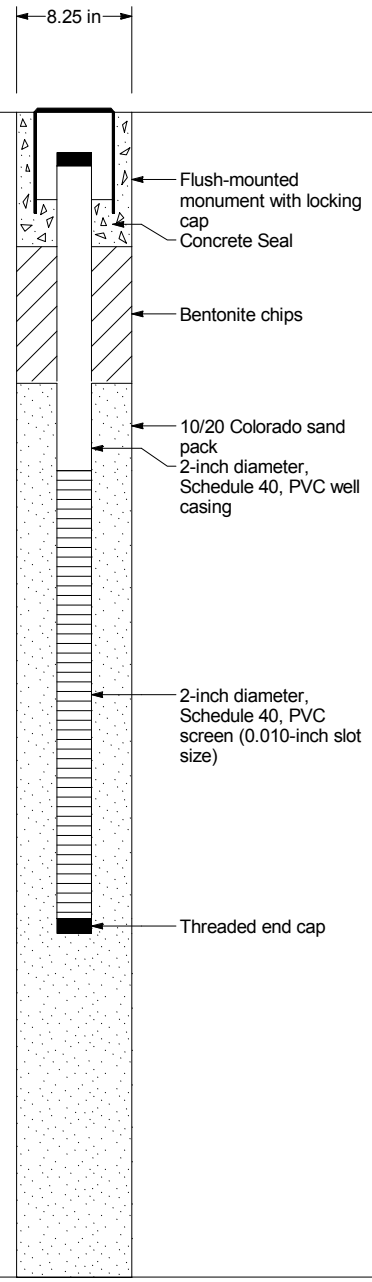

Boring Completed 11/10/11
Total Depth of Boring = 26.0 ft.

Monitoring Well Completed 11/10/11
Total Depth of Monitoring Well = 18.0 ft.

Notes:
1. Stratigraphic contacts are based on field interpretations and are approximate.
2. Reference to the text of this report is necessary for a proper understanding of subsurface conditions.
3. Refer to "Soil Classification System and Key" figure for explanation of graphics and symbols.

025190.211.012 3/21/14 N:\PROJECTS\025190.211.012.GPJ WELL LOG

LANDAU ASSOCIATES

Isaacson-Thompson RIFS
Tukwila, Washington

Log of Monitoring Well MW-16

Figure
C-17

MW-17

Drilling Method: Hollow-Stem Auger

Ground Elevation (ft): 18.62 NAVD88 / 21.10 MLLW

Depth (ft)	Sample Number & Interval	Sampler Type	Blows/Foot	PID (ppm)	Graphic Symbol	USCS Symbol	Soil Profile	Water Level
0						AC	Asphalt	
						GP	Brown, angular GRAVEL with sand and silt (no odor, no sheen) (dense, damp) **(FILL)**	
		a1	24	0.0		SP-SM	Brown, gravelly, fine to medium SAND with silt (no odor, no sheen) (dense, damp)	
		a1	37	0.0		SM	Brown, silty, fine SAND with trace gravel (no odor, no sheen) (dense, damp)	
5		a1	51	0.0		SP-SM	Brown, gravelly, fine to medium SAND with silt and brick fragments,	
		a1	4	0.0		SP	Brown, fine to medium SAND with trace silt and gravel (no odor, no sheen) (loose, damp)	
		a1	10	0.0				
10		a1	47	0.0			Brown, fine to medium SAND with brick and slag material (no odor, no sheen) (loose, damp)	
		a1	39	0.0		ML	**(FILL WITH SLAG)**	
		a1	15	0.0		SM	Brown and pink speckled, SILT or silt-like material with wood fragments (no odor, no sheen) (very dense, damp)	ATD
15		a1	6	0.3		GM	-Poor recovery, from 11 to 12.5 ft , refusal at 12 ft . Moved boring location approximately 10 ft west and advanced auger to 11 ft to begin sampling and logging.	
		a1	6	0.6		SM		
		a1	8	0.0		WD	Dark brown, silty, fine SAND with trace gravel and organics (no odor, no sheen) (medium dense, wet) **(ALLUVIUM)**	
		a1	8	0.0		SP		
20		a1	14	50.6		WD	Black, silty, fine GRAVEL with sand and organics (sulfur-like odor, slight organic sheen) (loose, wet)	
		a1	9	0.3		SP-SM	Black, highly organic, silty, fine SAND with wood (sulfur-like odor, slight organic sheen) (loose, wet)	
		a1	9	0.0			Brown fragments of WOOD and sawdust	
25		a1	17	0.0			Dark brown, fine to medium SAND with trace silt and organics (sulfur-like odor, no sheen) (loose, wet)	
							Brown fragments of WOOD and sawdust	
							Gray, fine to medium SAND with silt and wood fragments (no odor, no sheen) (loose, wet) -No wood from 24.5 to 26 ft	
30								

Monitoring Well Detail (DOE#: BHK-058)

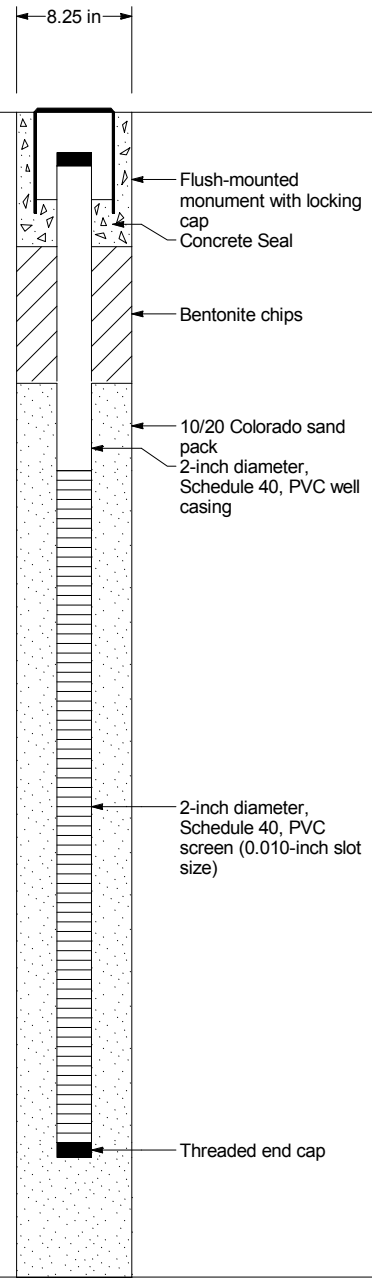

Boring Completed 11/10/11
Total Depth of Boring = 26.0 ft.

Monitoring Well Completed 11/10/11
Total Depth of Monitoring Well = 23.0 ft.

Notes:
1. Stratigraphic contacts are based on field interpretations and are approximate.
2. Reference to the text of this report is necessary for a proper understanding of subsurface conditions.
3. Refer to "Soil Classification System and Key" figure for explanation of graphics and symbols.

025190.211.012 3/21/14 N:\PROJECTS\025190.211.012.GPJ WELL LOG

LANDAU ASSOCIATES

Isaacson-Thompson RIFS
Tukwila, Washington

Log of Monitoring Well MW-17

Figure C-18

MW-18

Drilling Method: Hollow-Stem Auger

Ground Elevation (ft): 17.85 NAVD88 / 20.33 MLLW

Depth (ft)	Sample Number & Interval	Sampler Type	Blows/Foot	PID (ppm)	USCS Symbol	Soil Profile
0					AC	Asphalt
					GP	
					SP	Brown, angular, GRAVEL with sand and silt (no odor, no sheen) (dense, damp) **(FILL)**
		a1	26	0.0		Brown, fine to medium SAND with trace silt and gravel (no odor, no sheen) (medium dense, damp)
		a1	15	0.0	SP-SM	Brown, fine SAND with silt (no odor, no sheen) (loose, damp)
5					ML	
		a1	4	0.0	SM	Black to dark gray, sandy, SILT with trace organics (no odor, no sheen) (soft, damp) **(ALLUVIUM)**
		a1	5	0.0		Dark gray, silty, fine SAND with trace organics (no odor, no sheen) (loose, damp)
		a1	2	0.0		
10		a1	2	0.0		
					SP-SM	Gray, fine SAND with silt and organics (no odor, no sheen) (loose, wet)
		a1	3	0.0		
		a1		0.0	ML	Gray, sandy, SILT with organics (no odor, no sheen) (soft, wet)
		a1	8	0.0	SP	Gray, fine to medium SAND with trace silt (no odor, no sheen) (loose, wet)
15		a1	13	0.0		
		a1	9	0.0		
		a1	10	0.0		
		a1	10	0.0		
20		a1	9	0.0		
		a1	16	0.0		
		a1	17	0.0		
25		a1	14	0.0		
30						

Water Level: ATD

Monitoring Well Detail (DOE#: BHK-052)

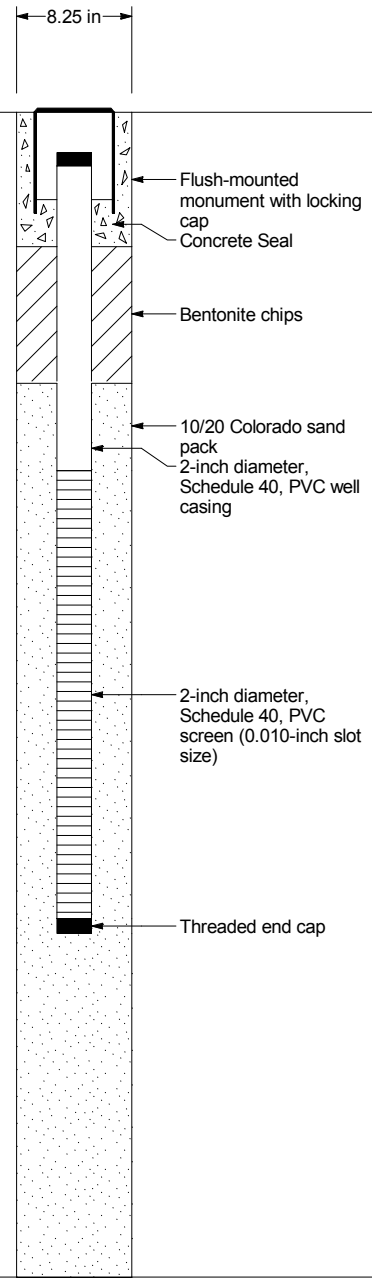

Boring Completed 11/08/11
Total Depth of Boring = 26.0 ft.

Monitoring Well Completed 11/08/11
Total Depth of Monitoring Well = 18.0 ft.

Notes:
1. Stratigraphic contacts are based on field interpretations and are approximate.
2. Reference to the text of this report is necessary for a proper understanding of subsurface conditions.
3. Refer to "Soil Classification System and Key" figure for explanation of graphics and symbols.

025190.211.012 3/21/14 N:\PROJECTS\025190.211.012.GPJ WELL LOG

LANDAU ASSOCIATES

Isaacson-Thompson RIFS
Tukwila, Washington

Log of Monitoring Well MW-18

Figure C-19

MW-19

Drilling Method: Hollow-Stem Auger

Ground Elevation (ft): 18.20 NAVD88 / 20.68 MLLW

Depth (ft)	Sample Number & Interval	Sampler Type	Blows/Foot	PID (ppm)	Graphic Symbol	USCS Symbol	Soil Profile	Water Level
0						AC	Concrete	
						GP	Brown, angular, GRAVEL with silt and sand (no odor, no sheen) (dense, damp)	
						SP-SM	**(FILL)**	
		a1	19	0.0			Brown, fine to medium SAND with silt and gravel (no odor, no sheen) (loose to medium dense, damp)	
		a1	13	0.0				
5		a1	10	0.0				
		a1	8	0.0				
						SP	Brown, fine to medium SAND with trace silt and brick fragments (no odor, no sheen) (loose, damp)	
		a1	8	0.0				
10		a1	7	0.0				
		a1	5	0.0		ML	Gray, sandy, SILT with trace organics (no odor, no sheen) (soft, wet)	ATD
						SM	**(ALLUVIUM)**	
		a1	11	0.0				
		a1		0.0		SP	Gray, silty, fine SAND (no odor, no sheen) (loose, wet)	
15		a1	12	0.0			Gray, fine SAND with trace silt (no odor, no sheen) (loose, wet)	
		a1	14	0.0		SP	Dark gray, fine to medium SAND with trace silt (no odor, no sheen) (loose, wet)	
		a1	18	0.0				
		a1	11	0.0				
20		a1	10	0.0				
		a1	12	0.0				
		a1	17	0.0				
25		a1	15	0.0				
30								

Monitoring Well Detail (DOE#: BHK-056)

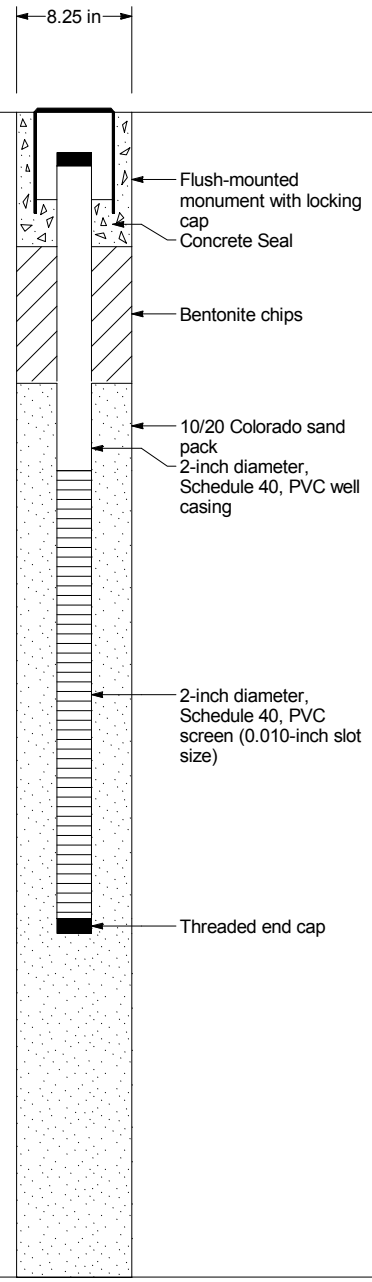

Boring Completed 11/09/11
Total Depth of Boring = 26.0 ft.

Monitoring Well Completed 11/09/11
Total Depth of Monitoring Well = 18.0 ft.

Notes:
1. Stratigraphic contacts are based on field interpretations and are approximate.
2. Reference to the text of this report is necessary for a proper understanding of subsurface conditions.
3. Refer to "Soil Classification System and Key" figure for explanation of graphics and symbols.

025190.211.012 3/21/14 N:\PROJECTS\025190.211.012.GPJ WELL LOG

LANDAU ASSOCIATES

Isaacson-Thompson RIFS
Tukwila, Washington

Log of Monitoring Well MW-19

Figure C-20

MW-20

Drilling Method: Hollow-Stem Auger

Ground Elevation (ft): 18.30 NAVD88
20.78 MLLW

Depth (ft)	Sample Number & Interval	Sampler Type	Blows/Foot	PID (ppm)	Graphic Symbol	USCS Symbol	Soil Profile	Water Level
0						AC	Asphalt	
						GP	Brown, sandy, GRAVEL with silt, brick, and concrete fragments (no odor, no sheen) (dense, damp) [fill] **(FILL)**	
		a1	51	0.0				
		a1	23	0.0				
5						SP-SM	Brown, gravelly, medium to coarse SAND with silt and concrete fragments (no odor, no sheen) (loose, damp)	
		a1	8	0.0		SM	Brown, mottled, silty, fine SAND (no odor, no sheen) (loose, damp)	
		a1	4	0.0				
		a1	2	0.0		ML	Gray, mottled, sandy, SILT (no odor, no sheen) (soft, moist)	
10		a1	2	0.0				
						SP	Dark brown, fine SAND with trace silt (no odor, no sheen) (loose, damp to wet)	
		a1	12	0.0				
		a1	12	0.0				ATD
15		a1 a1	8	0.0 0.0				
		a1	8	0.0				
		a1	8	0.0			-Color change to dark gray at 17.5 ft	
		a1	12	0.0				
20		a1	8	0.0				
		a1	18	0.0				
		a1	16	0.0				
25		a1	18	0.0				
30								

Monitoring Well Detail
(DOE#: BHK-057)

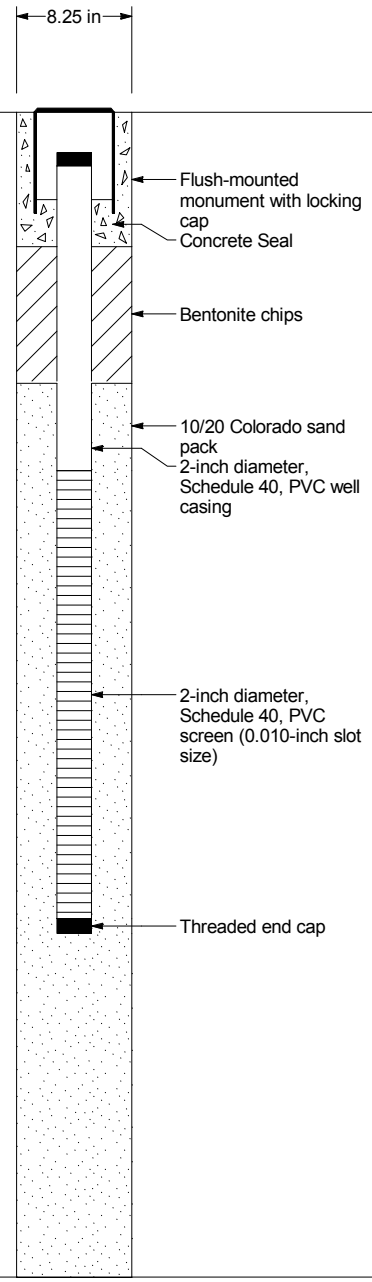

Boring Completed 11/09/11
Total Depth of Boring = 26.0 ft.

Monitoring Well Completed 11/09/11
Total Depth of Monitoring Well = 18.0 ft.

Notes:
1. Stratigraphic contacts are based on field interpretations and are approximate.
2. Reference to the text of this report is necessary for a proper understanding of subsurface conditions.
3. Refer to "Soil Classification System and Key" figure for explanation of graphics and symbols.

025190.211.012 3/21/14 N:\PROJECTS\025190.211.012.GPJ WELL LOG

LANDAU ASSOCIATES

Isaacson-Thompson RIFS
Tukwila, Washington

Log of Monitoring Well MW-20

Figure
C-21

MW-21

SAMPLE DATA				SOIL PROFILE			GROUNDWATER
Depth (ft)	Sample Number & Interval	Sampler Type	Blows/Foot	PID (ppm)	Graphic Symbol	USCS Symbol	Drilling Method: Hollow-Stem Auger Ground Elevation (ft): 17.91 NAVD88 20.39 MLLW	Water Level
0						AC	Asphalt	
						GP	Brown, angular GRAVEL with sand and silt (no odor, no sheen) (dense, damp) [base coarse]	
		a1	28	0.0		SP-SM	**(FILL)**	
		a1	28	0.0			Brown, fine to medium SAND with-to-trace silt and trace gravel (no odor, no sheen) (medium dense, damp)	
5		a1	6	0.0				
						SP	Gray, fine to medium SAND with trace silt (no odor, no sheen) (dense, damp)	
		a1	8	0.0		SM	Gray, silty, fine SAND with organics (no odor, no sheen) (loose, damp)	
		a1	1	0.0			**(ALLUVIUM)**	
						ML	Gray, sand, SILT with trace organics (no odor, no sheen) (loose, moist)	
10		a1	2	0.0				
		a1	3	0.0				ATD
		a1	8	0.0				
		a1		0.0		SP	Dark gray, fine to medium SAND with trace silt (no odor, no sheen) (loose, wet)	
15		a1	10	0.0				
		a1	15	0.0				
		a1	14	0.1			-sulfur-like odor from 17 to 18.5 ft	
		a1	16	0.0				
20		a1	26	0.0				
		a1	40	0.0			-medium dense	
		a1	13	0.0				
25		a1	15	0.0				
30								

Monitoring Well Detail
(DOE#: BHK-060)

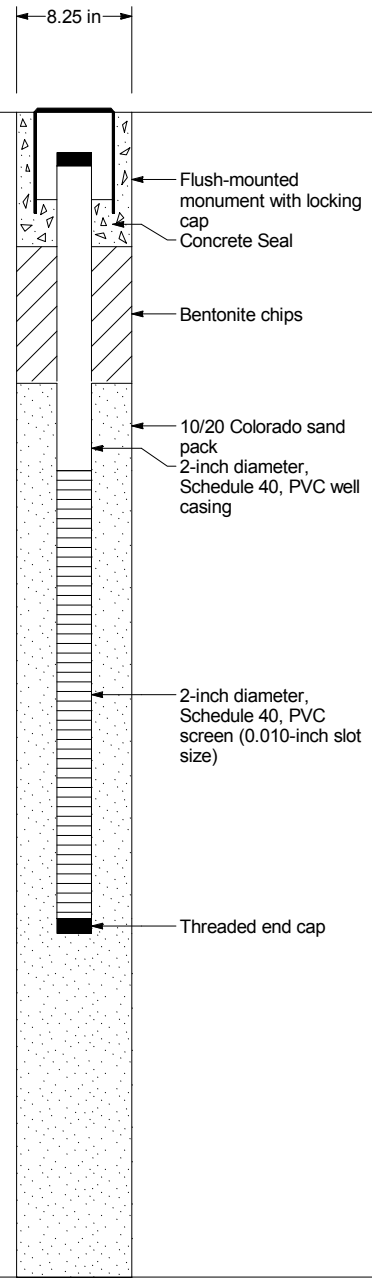

Boring Completed 11/11/11
Total Depth of Boring = 26.0 ft.

Monitoring Well Completed 11/11/11
Total Depth of Monitoring Well = 18.0 ft.

Notes:
1. Stratigraphic contacts are based on field interpretations and are approximate.
2. Reference to the text of this report is necessary for a proper understanding of subsurface conditions.
3. Refer to "Soil Classification System and Key" figure for explanation of graphics and symbols.

025190.211.012 3/21/14 N:\PROJECTS\025190.211.012.GPJ WELL LOG

LANDAU ASSOCIATES

Isaacson-Thompson RIFS
Tukwila, Washington

Log of Monitoring Well MW-21

Figure
C-22

MW-22

Drilling Method: Hollow-Stem Auger

Ground Elevation (ft): 17.26 NAVD88
19.74 MLLW

Depth (ft)	Sample Number & Interval	Sampler Type	Blows/Foot	PID (ppm)	Graphic Symbol	USCS Symbol	Soil Profile	Water Level
0						AC	Asphalt	
						GP	Brown, angular GRAVEL with sand and silt (no odor, no sheen) (dense, damp) **(FILL)**	
		a1	5	0.0		SP	Brown, fine to medium SAND with trace silt (no odor, no sheen) (loose, damp)	
		a1	4	0.0				
5		a1	2	0.0		ML	Dark gray, sandy, SILT with organics (no odor, no sheen) (soft, damp) **(ALLUVIUM)**	
		a1	4	0.0				
		a1	2	0.0		SM	Brown, silty, fine SAND with organics (no odor, no sheen) (loose, damp to moist)	
						ML		
10		a1	2	0.0		SM	Gray, sandy, SILT (no odor, no sheen) (soft, damp to moist)	
		a1	9	0.0		SP	Gray, silty, fine SAND with organics (no odor, no sheen) (loose, moist)	
		a1	6	0.0			Dark gray to brown, fine to medium SAND with trace silt (no odor, no sheen) (loose, moist to wet)	ATD
		a1		0.0				
15		a1	9	0.0				
						WD	Wood	
		a1	6	0.0				
		a1	8	0.0		SP	Brown, fine to medium SAND with wood fragments (no odor, no sheen) (loose, wet)	
		a1	10	0.0				
20		a1	9	0.0				
		a1	11	0.0				
		a1	12	0.0			-3 inch lens of SAND with silt at 23.5 ft	
25		a1	6	0.0				
30								

Monitoring Well Detail
(DOE#: BHK-061)

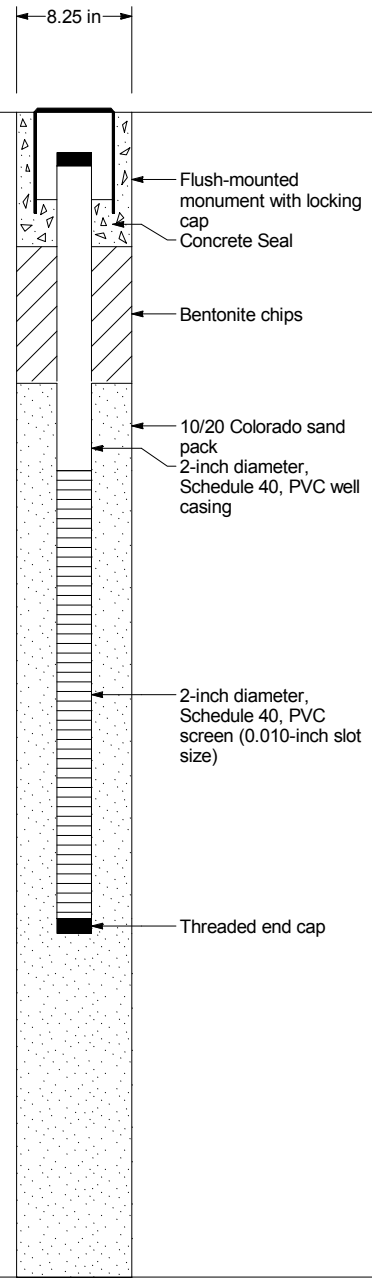

Boring Completed 11/11/11
Total Depth of Boring = 26.0 ft.

Monitoring Well Completed 11/11/11
Total Depth of Monitoring Well = 18.0 ft.

Notes:
1. Stratigraphic contacts are based on field interpretations and are approximate.
2. Reference to the text of this report is necessary for a proper understanding of subsurface conditions.
3. Refer to "Soil Classification System and Key" figure for explanation of graphics and symbols.

025190.211.012 3/21/14 N:\PROJECTS\025190.211.012.GPJ WELL LOG

LANDAU ASSOCIATES

Isaacson-Thompson RIFS
Tukwila, Washington

Log of Monitoring Well MW-22

Figure
C-23

MW-23

Drilling Method: Hollow-Stem Auger

Ground Elevation (ft): 16.88 NAVD88
19.36 MLLW

Depth (ft)	Sample Number & Interval	Sampler Type	Blows/Foot	PID (ppm)	Graphic Symbol	USCS Symbol	Soil Profile	Water Level
0						AC	Asphalt	
						SP-SM	Gray, fine to medium SAND with silt and gravel (no odor, no sheen) (medium dense, damp) (observed in soil cuttings) **(STABILIZED FILL)** **(FILL)**	
5		a1	72	0.0		SM	Gray, silty, fine SAND with trace gravel (non-hydrocarbon odor, no sheen) (very dense, dry to damp) (stabilized fill material)	
		a1	65/6	0.0				
10		a1	85	0.0				
		a1	8	0.0		SP-SM	Gray, fine SAND with silt (non-hydrocarbon odor, no sheen) (loose, moist to wet)	ATD
		a1	6	0.0		SP	Gray, fine to medium SAND with trace silt (slight non-hydrocarbon odor, no sheen) (loose, wet)	
15		a1	8	0.0			**(FILL)**	
		a1	12	0.0				
		a1	8	0.0				
		a1	17	0.0				
20		a1	18	0.0				
			16	0.0				
		a1	12	0.0			-Non-hydrocarbon odor decreased to slight at 24 ft	
25		a1	15	0.0				
30								

Monitoring Well Detail
(DOE#: BHK-055)

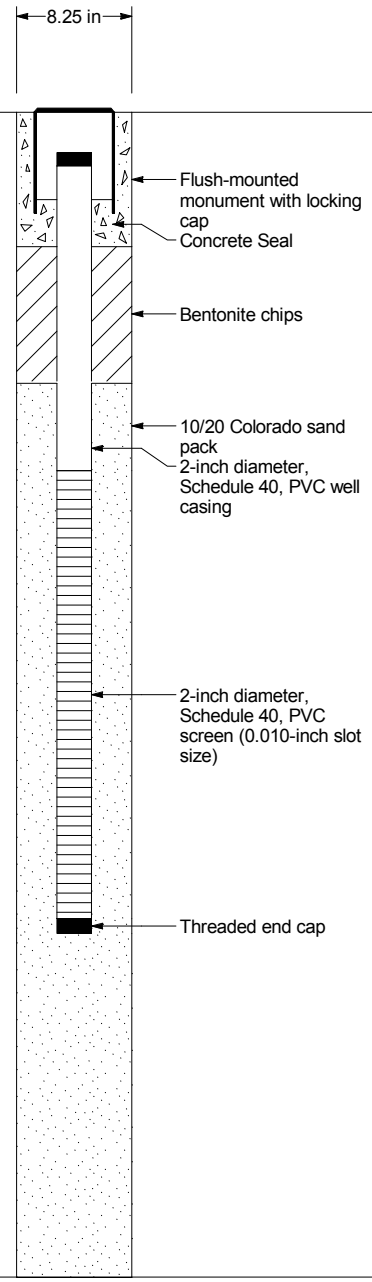

Boring Completed 11/09/11
Total Depth of Boring = 26.0 ft.

Monitoring Well Completed 11/09/11
Total Depth of Monitoring Well = 18.0 ft.

Notes:
1. Stratigraphic contacts are based on field interpretations and are approximate.
2. Reference to the text of this report is necessary for a proper understanding of subsurface conditions.
3. Refer to "Soil Classification System and Key" figure for explanation of graphics and symbols.

025190.211.012 3/21/14 N:\PROJECTS\025190.211.012.GPJ WELL LOG

LANDAU ASSOCIATES

Isaacson-Thompson RIFS
Tukwila, Washington

Log of Monitoring Well MW-23

Figure
C-24

MW-24

SAMPLE DATA				SOIL PROFILE			GROUNDWATER
Depth (ft)	Sample Number & Interval	Sampler Type	Blows/Foot	PID (ppm)	Graphic Symbol	USCS Symbol	Drilling Method: Hollow-Stem Auger Ground Elevation (ft): 19.21 NAVD88 21.69 MLLW	Water Level
0						AC	Asphalt -no recovery	
5		a1	68	1.5		SM	Gray, silty, fine SAND with gravel (non-hydrocarbon odor, no sheen) (very dense, damp) **(STABILIZED FILL)**	
		a1	50/6	1.8				
10		a1	69	1.1				
		a1	48	1.2				
		a1	12	0.5		SM	Gray, silty, fine SAND (non-hydrocarbon odor, no sheen) (loose, wet)	ATD
15		a1	9	0.3		SP	Dark brown, fine to medium SAND with trace silt (non-hydrocarbon odor, no sheen) (loose, wet) **(FILL)**	
		a1	12	0.6				
		a1	11	0.3				
		a1	8	0.1				
20		a1	13	0.2				
		a1	11	0.0			-Decreasing odor at 21.5 ft	
		a1	25	0.0				
25		a1	21	0.0		SP	Dark brown, fine to medium SAND with trace silt (non-hydrocarbon odor, no sheen) (medium dense, wet) **(ALLUVIUM)**	
30								

Monitoring Well Detail
(DOE#: BHK-062)

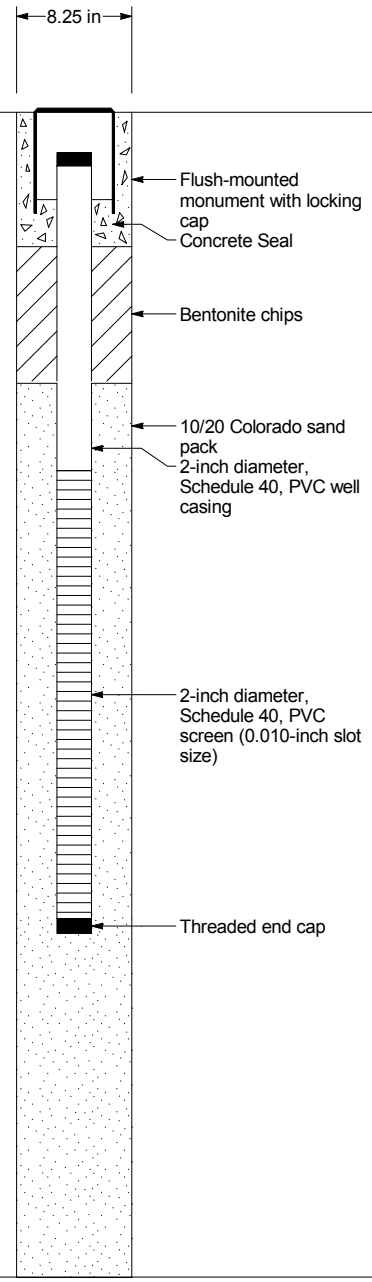

Boring Completed 11/14/11
Total Depth of Boring = 26.0 ft.

Monitoring Well Completed 11/14/11
Total Depth of Monitoring Well = 18.0 ft.

Notes:
1. Stratigraphic contacts are based on field interpretations and are approximate.
2. Reference to the text of this report is necessary for a proper understanding of subsurface conditions.
3. Refer to "Soil Classification System and Key" figure for explanation of graphics and symbols.

025190.211.012 3/21/14 N:\PROJECTS\025190.211.012.GPJ WELL LOG

LANDAU ASSOCIATES

Isaacson-Thompson RIFS
Tukwila, Washington

Log of Monitoring Well MW-24

Figure
C-25

MW-25

SAMPLE DATA					SOIL PROFILE			GROUNDWATER
Depth (ft)	Sample Number & Interval	Sampler Type	Blows/Foot	PID (ppm)	Graphic Symbol	USCS Symbol	Drilling Method: Hollow-Stem Auger Ground Elevation (ft): 17.75 NAVD88 20.23 MLLW	Water Level
0						AC	Asphalt	
							-no recovery	
5		a1	50/6	0.0		SP	Brown, gravelly, medium to coarse SAND with silt (no odor, no sheen) (dense, damp) **(STABILIZED FILL)**	
		a1	23	0.0		SP-SM	Brown, fine SAND with silt and gravel (no odor, no sheen) (medium dense, damp)	
10		a1	28	0.0				
		a1	18	0.0		SP-SM	Brown, gravelly, fine to medium SAND with silt (no odor, no sheen) (medium dense, damp to moist)	
						SP	**(FILL)**	ATD
		a1	14	0.0			Dark brown, fine to medium SAND with trace silt (no odor, no sheen) (loose, wet)	
		a1		1.5				
15		a1	8	0.0			-Slight sheen and odor at 13.5 to 14.5 ft	
		a1	12	0.0				
		a1	12	0.0				
		a1	9					
20		a1	9	0.0 0.0				
		a1	15	0.0				
		a1	9	0.0				
25		a1	6	0.0			Dark brown, fine to medium SAND with trace silt and wood fragments (no odor, no sheen) (loose, wet) **(ALLUVIUM)**	
30								

Boring Completed 11/14/11
Total Depth of Boring = 26.0 ft.

Monitoring Well Completed 11/14/11
Total Depth of Monitoring Well = 18.0 ft.

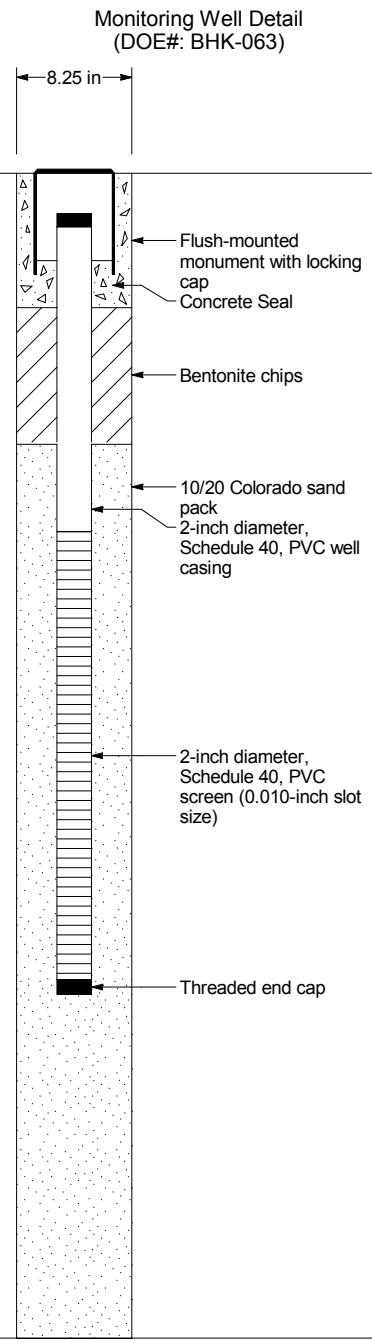

Notes:
1. Stratigraphic contacts are based on field interpretations and are approximate.
2. Reference to the text of this report is necessary for a proper understanding of subsurface conditions.
3. Refer to "Soil Classification System and Key" figure for explanation of graphics and symbols.

025190.211.012 3/21/14 N:\PROJECTS\025190.211.012.GPJ WELL LOG

LANDAU ASSOCIATES

Isaacson-Thompson RIFS
Tukwila, Washington

Log of Monitoring Well MW-25

Figure
C-26

MW-13

Drilling Method: Hollow-Stem Auger

Ground Elevation (ft): 18.37NAVD88 / 20.85 MLLW

Depth (ft)	Sample Number & Interval	Sampler Type	Blows/Foot	PID (ppm)	Graphic Symbol	USCS Symbol	Soil Profile	Water Level
0						AC	Asphalt	
						SP-SM	Brown, fine to medium SAND with silt and trace gravel (no odor, no sheen) (medium dense, damp) [fill]	
		a1	24	0.1		SM	**(FILL)**	
						SP-SM	Brown, silty, fine SAND with gravel (no odor, no sheen) (medium dense, damp)	
		a1	21	0.0			Brown, fine to medium SAND with silt and trace gravel (no odor, no sheen) (medium dense, damp)	
5		a1	21	0.0				
		a1	16	0.1		SP	Gray, fine to medium SAND with trace silt and gravel (no odor, no sheen) (loose, damp)	
		a1	35	0.5				
		a1	27	0.5		SM	Brown, silty, fine SAND with trace gravel (no odor, no sheen) (medium dense, damp)	
10						SP-SM	Black, medium to coarse SAND with silt and metal debris, nails, and slag material (slight odor, slight sheen) (very dense, damp)	
		a1	100	3.6				
		a1	115	5.1			**(FILL WITH SLAG)**	
							-brick fragments (pink to tan in color) at 12 ft	ATD
		a1	91	0.5		SP-SM	Black to brown, gravelly, medium to coarse SAND with silt (slight odor, no sheen) (very dense, wet)	
15		a1		0.1				
		a1	90	0.0				
		a1	50/1	0.0			-Refusal: no recovery, sampler hammer assembly damaged and bottom 5 ft section of auger broken and lost down hole. Well could not be installed at this location. Final well placement at location SB-4.	
20								
25								
30								

Boring Completed 11/03/11
Total Depth of Boring = 18.5 ft.

Notes:
1. Stratigraphic contacts are based on field interpretations and are approximate.
2. Reference to the text of this report is necessary for a proper understanding of subsurface conditions.
3. Refer to "Soil Classification System and Key" figure for explanation of graphics and symbols.

025190.211.012 3/21/14 N:\PROJECTS\025190.211.012.GPJ SOIL BORING LOG

LANDAU ASSOCIATES

Isaacson-Thompson RIFS
Tukwila, Washington

Log of Boring MW-13

Figure C-27

MW-13B

Drilling Method: Air Knife/Hand Auger and Hollow-Stem Auger

Ground Elevation (ft): 17.62 NAVD88 / 20.10 MLLW

Depth (ft)	Sample Number & Interval	Sampler Type	Blows/Foot	PID (ppm)	Graphic Symbol	USCS Symbol	Soil Profile	Water Level
0						AC	Asphalt	
						SM	Gray, silty, fine to medium SAND with gravel (no odor, no sheen) (loose, damp) **(FILL)**	
		d5		0.0				
5						SP-SM	Gray, fine SAND with silt and trace gravel (no odor, no sheen) (loose, damp)	
		d5		0.0			-Airknife/Hand Auger to 6.5 ft	
		a1	12	0.6		ML	Black, sandy, SILT with gravel and organics (hydrocarbon odor, slight sheen) (soft, damp)	
		a1	49	0.0		GM	Brown, silty, GRAVEL with sand (non-hydrocarbon odor, no sheen) (hard, damp)	
10		a1	41	0.0		SM	Brown, silty, fine SAND with gravel, slag material, and brick (no odor, no sheen) (very dense, damp) **(FILL WITH SLAG)**	
		a1	20	0.0		SM		ATD
		a1	67				Brown, silty, fine to medium SAND with gravel and trace organics (no odor, no sheen) (medium dense, moist to wet) -Significant concrete material from 12.5-14 ft, no sample recovery, refusal at 14 ft	
15								
20								
25								
30								

Boring Completed 11/10/11
Total Depth of Boring = 14.0 ft.

Notes:
1. Stratigraphic contacts are based on field interpretations and are approximate.
2. Reference to the text of this report is necessary for a proper understanding of subsurface conditions.
3. Refer to "Soil Classification System and Key" figure for explanation of graphics and symbols.

025190.211.012 3/21/14 N:\PROJECTS\025190.211.012.GPJ SOIL BORING LOG

LANDAU ASSOCIATES

Isaacson-Thompson RIFS
Tukwila, Washington

Log of Boring MW-13B

Figure C-28

SB-01

Drilling Method: Hollow-Stem Auger

Ground Elevation (ft): not surveyed

Depth (ft)	Sample Number & Interval	Sampler Type	Blows/Foot	PID (ppm)	USCS Symbol	Soil Profile	Water Level
0					AC	Concrete Floor	
					SP	Brown, fine to medium SAND with trace silt (no odor, no sheen) (medium dense, damp) **(FILL)**	
		a2	67	0.3			
		a2	71	0.0		- black brick fragment at 4 ft	
5		a2	22	0.2		- silty at 5 ft	
		a2	26			- 1/4 inch thick silt lense at 7 ft	
		a2	10	0.3	OL	Dark grey to black, clayey silt (slight organic odor, no sheen) (medium stiff, moist) **(ALLUVIUM)**	
		a2	14		ML	Grey SILT with trace sand (no odor, no sheen) (stiff, moist)	
10		a2	11	0.2	SP	Grades to fine SAND with trace silt (no odor, no sheen) (very loose to loose, moist to saturated)	
		a2	12			- saturated at 13 ft	ATD
		a2	13	0.5			
15		a2	18				
		a2	22		SP	Grey, fine to medium SAND (no odor, no sheen) (loose, saturated)	
		a2	26				
		a2	38	0.6	SM	Brown, silty, fine SAND with unweathered wood fragments (no odor, no sheen) (loose, wet)	
20					SP	Dark grey, fine to medium SAND (no odor, no sheen) (medium dense, moist)	
		a2	42			- 1/16 inch thick silt lense at 20.5 ft	
		a2	42	0.3		- with occasional 1/8-1/4 inch diameter silt nodules from 21-25.5 ft	
25		a2	41				
30							

Boring Completed 04/25/11
Total Depth of Boring = 25.5 ft.

Notes:
1. Stratigraphic contacts are based on field interpretations and are approximate.
2. Reference to the text of this report is necessary for a proper understanding of subsurface conditions.
3. Refer to "Soil Classification System and Key" figure for explanation of graphics and symbols.

025190.211.012 3/21/14 N:\PROJECTS\025190.211.012.GPJ SOIL BORING LOG

LANDAU ASSOCIATES

Isaacson-Thompson RIFS
Tukwila, Washington

Log of Boring SB-01

Figure C-29

SB-02

Drilling Method: Geoprobe™

Ground Elevation (ft): 18.4 NAVD88
20.90 MLLW

Depth (ft)	Sample Number & Interval	Sampler Type	Blows/Foot	PID (ppm)	Graphic Symbol	USCS Symbol	Soil Profile	Water Level
0						AC	Asphalt	
						SP/ SM / SM / SP	Brown, fine SAND with silt (no odor, no sheen) (dense, moist) **(FILL)**	
		d3		0.0			Gray, silty, fine SAND with trace gravel (no odor, no sheen) (dense, moist)	
				0.0		SM	Gray, fine SAND with trace silt and gravel (no odor, no sheen) (dense , damp)	
5						SP/ SM	Dark gray, silty, fine SAND (no odor, no sheen) (moist, dense)	
				0.0				
		d3		0.0			Gray, fine SAND with silt (no odor, no sheen) (dense, moist)	
				0.0				
				0.0				
10							-Grades to fine to medium SAND at 11 ft , wet at 13 ft	
		d3		0.0				ATD
						SP	Gray, fine to medium SAND with trace silt (no odor, no sheen) (medium dense, wet)	
15				0.0				
		d3		0.0				
20						ML	Black, SILT with sand and organics (no odor, no sheen) (stiff, moist to wet) **(ALLUVIUM)**	
						SP/ SM	Gray, fine to medium SAND with silt to silty (no odor, no sheen) (dense, wet)	
		d3		0.0		SP	Dark gray, fine SAND with trace silt (no odor, no sheen) (medium dense, wet) -Wood fragments at 23 ft	
25								
30								

Boring Completed 10/31/11
Total Depth of Boring = 25.0 ft.

Notes:
1. Stratigraphic contacts are based on field interpretations and are approximate.
2. Reference to the text of this report is necessary for a proper understanding of subsurface conditions.
3. Refer to "Soil Classification System and Key" figure for explanation of graphics and symbols.

025190.211.012 3/21/14 N:\PROJECTS\025190.211.012.GPJ SOIL BORING LOG

LANDAU ASSOCIATES

Isaacson-Thompson RIFS
Tukwila, Washington

Log of Boring SB-02

Figure
C-30

SB-03

SAMPLE DATA				SOIL PROFILE			GROUNDWATER
Depth (ft)	Sample Number & Interval	Sampler Type	Blows/Foot	PID (ppm)	Graphic Symbol	USCS Symbol	Drilling Method: Geoprobe™ Ground Elevation (ft): 16.7 NAVD88 19.24 MLLW	
0						SP	Dark tan, fine to medium SAND with gravel and trace slag material (no odor, no sheen) (loose, damp)	Groundwater not encountered.
		d5		0.0			**(FILL WITH SLAG)**	
						DB	-Plastic sheet at 2 ft	
5				0.0			Tan brick, black slag materials, concrete, and rubble (no odor, no sheen) (medium dense, moist)	
				1.7			-Airknifed to 5 ft	
		d3		0.0			-No recovery	
10		d3					-Refusal at 11 ft	

Boring Completed 11/08/11
Total Depth of Boring = 11.0 ft.

15
20
25
30

Notes:
1. Stratigraphic contacts are based on field interpretations and are approximate.
2. Reference to the text of this report is necessary for a proper understanding of subsurface conditions.
3. Refer to "Soil Classification System and Key" figure for explanation of graphics and symbols.

025190.211.012 3/21/14 N:\PROJECTS\025190.211.012.GPJ SOIL BORING LOG

SB-05

Drilling Method: Geoprobe™

Ground Elevation (ft): 17.1 NAVD88
19.65 MLLW

Depth (ft)	Sample Number & Interval	Sampler Type	Blows/Foot	PID (ppm)	Graphic Symbol	USCS Symbol	SOIL PROFILE	Water Level
0						AC	Asphalt	
						SP-SM	Brown, medium to coarse SAND with silt (no odor, no sheen) (medium dense, damp)	
						SM	**(FILL)**	
		d3		0.1				
				0.1			Dark brown, silty, fine SAND with trace gravel (hydrocarbon odor from 5 to 8 ft , no sheen) (medium dense, damp)	
				0.1				
5								
				93.6				
						SP-SM	Gray, fine to medium SAND with silt (hydrocarbon odor from 5 to 8 ft , no sheen) (medium dense, damp)	
		d3		88.1				
						SP-SM	-Gravel lens at 7 ft	
				2.1		SP-SM	Gray, fine to medium SAND with silt (no odor, no sheen) (medium dense, damp)	
10						SM	Dark brown, fine to medium SAND with silt and trace wood (no odor, no sheen) (medium dense, damp)	
							(ALLUVIUM)	
		d3		0.1		SP	Dark brown, silty, fine SAND (no odor, no sheen) (medium dense, damp)	
							Gray, fine to medium SAND with trace silt (no odor, no sheen) (medium dense, damp to wet)	
15							-Color change to brown at 15 ft	ATD
				0.1				
		d3		0.1			-Color change to gray at 17 ft	
20							-Silt lens at 20 ft	
		d3		0.1				
25								
30								

Boring Completed 10/31/11
Total Depth of Boring = 25.0 ft.

Notes:
1. Stratigraphic contacts are based on field interpretations and are approximate.
2. Reference to the text of this report is necessary for a proper understanding of subsurface conditions.
3. Refer to "Soil Classification System and Key" figure for explanation of graphics and symbols.

025190.211.012 3/21/14 N:\PROJECTS\025190.211.012.GPJ SOIL BORING LOG

LANDAU ASSOCIATES

Isaacson-Thompson RIFS
Tukwila, Washington

Log of Boring SB-05

Figure
C-32

SB-06

Drilling Method: Geoprobe™

Ground Elevation (ft): 18.1 NAVD88
20.65 MLLW

Depth (ft)	Sample Number & Interval	Sampler Type	Blows/Foot	PID (ppm)	Graphic Symbol	USCS Symbol	Description	Water Level
0						AC	Concrete	
						SP-SM	Brown, fine to medium SAND with silt and trace gravel (no odor, no sheen) (medium dense, damp) **(FILL)** -White crushed concrete at 2 ft	
		d3		0.0				
				0.0				
				0.0				
5				0.0				
		d3		0.0				
				0.0				
				0.0				
						SM	Brown, silty, fine SAND (no odor, no sheen) (medium dense, damp) **(ALLUVIUM)**	
10						SP	Brown, fine to medium SAND trace silt (no odor, no sheen) (medium dense, moist)	
		d3		0.0				ATD
						SM	Gray, silty, fine SAND (no odor, no sheen) (dense, wet)	
						SP-SM		
				0.0		SP	Brown, fine SAND with silt (no odor, no sheen) (medium dense, wet)	
15							Brown, fine to medium SAND with trace silt (no odor, no sheen) (medium dense, wet)	
		d3		0.0				
20								
		d3		0.0				
						SP	Brown, medium SAND (no odor, no sheen) (medium dense, wet)	
25								
30								

Boring Completed 11/01/11
Total Depth of Boring = 25.0 ft.

Notes:
1. Stratigraphic contacts are based on field interpretations and are approximate.
2. Reference to the text of this report is necessary for a proper understanding of subsurface conditions.
3. Refer to "Soil Classification System and Key" figure for explanation of graphics and symbols.

LANDAU ASSOCIATES

Isaacson-Thompson RIFS
Tukwila, Washington

Log of Boring SB-06

Figure C-33

SB-07

SAMPLE DATA					SOIL PROFILE			GROUNDWATER
Depth (ft)	Sample Number & Interval	Sampler Type	Blows/Foot	PID (ppm)	Graphic Symbol	USCS Symbol	Drilling Method: Geoprobe™ Ground Elevation (ft): 18.1 NAVD88 20.63 MLLW	Water Level
0						AC	Asphalt	
						SP-SM / SP-SM	Dark brown, fine to medium SAND with silt and gravel (no odor, no sheen) (dense, damp) [base coarse] **(FILL)**	
		d3		0.0 0.0			Brown, fine SAND with silt (no odor, no sheen) (dense, damp)	
5				0.0				
		d3		0.0 0.0				
				0.0				
10								ATD
		d3		0.0		SM	Brown, mottled, silty, fine SAND (no odor, no sheen) (medium dense, wet)	
				0.0		SP	Brown, fine to medium SAND with trace silt (no odor, no sheen) (medium dense, wet) **(ALLUVIUM)**	
15								
		d3		0.0				
20								
		d3		0.0			-Color change to gray at 22 ft	
25								
30								

Boring Completed 11/01/11
Total Depth of Boring = 25.0 ft.

Notes:
1. Stratigraphic contacts are based on field interpretations and are approximate.
2. Reference to the text of this report is necessary for a proper understanding of subsurface conditions.
3. Refer to "Soil Classification System and Key" figure for explanation of graphics and symbols.

025190.211.012 3/21/14 N:\PROJECTS\025190.211.012.GPJ SOIL BORING LOG

SB-08

SAMPLE DATA					SOIL PROFILE			GROUNDWATER
Depth (ft)	Sample Number & Interval	Sampler Type	Blows/Foot	PID (ppm)	Graphic Symbol	USCS Symbol	Drilling Method: Geoprobe™ Ground Elevation (ft): 17.7 NAVD88 20.23 MLLW	Water Level
0						AC	Asphalt	
						GP	Brown, sandy, GRAVEL with silt (no odor, no sheen) (dense, damp) **(FILL)**	
		d3		1.8		SM	Brown, silty, fine to medium SAND with gravel (no odor, no sheen) (medium dense, damp) [fill] -1 inch thick black organics lens at 4 ft	
5						SP	Brown, fine SAND with trace silt (no odor, no sheen) (medium dense, damp) **(ALLUVIUM)**	
		d3		1.5				
10								
		d3		2.4			-Color change to gray at 12 ft -Wet at 13 ft	ATD
15								
		d3		2.1				
20							-Fine to medium SAND at 20 ft	
		d3		1.7				
25								
30								

Boring Completed 11/14/11
Total Depth of Boring = 25.0 ft.

Notes:
1. Stratigraphic contacts are based on field interpretations and are approximate.
2. Reference to the text of this report is necessary for a proper understanding of subsurface conditions.
3. Refer to "Soil Classification System and Key" figure for explanation of graphics and symbols.

025190.211.012 3/21/14 N:\PROJECTS\025190.211.012.GPJ SOIL BORING LOG

SB-09

Drilling Method: Geoprobe™

Ground Elevation (ft): 18.2 NAVD88
20.71 MLLW

Depth (ft)	Sample Number & Interval	Sampler Type	Blows/Foot	PID (ppm)	Graphic Symbol	USCS Symbol	Description	Water Level
0						AC	Concrete	
						SM	Brown, silty, fine to medium SAND with trace gravel (no odor, no sheen) (medium dense, damp)	
						SP	**(FILL)**	
		d3		1.4 1.6		SM	Tan, fine to medium SAND with trace silt and gravel (no odor, no sheen) (damp, medium dense)	
5							Brown, silty, fine to medium SAND (no odor, no sheen) (medium dense, damp) **(ALLUVIUM)**	
						SP	Brown, fine to medium SAND (no odor, no sheen) (medium dense, damp)	
		d3		1.7				
10								
						SM	Brown, silty, fine SAND (no odor, no sheen) (medium dense, moist)	
		d3		1.8				ATD
						SP-SM	Gray, fine SAND with silt (no odor, no sheen) (medium dense, wet)	
15						WD	Brown, solid wood debris	
						SP	Gray, fine to medium SAND (no odor, no sheen) (medium dense, wet)	
		d3		1.3				
						SP	Brown, fine to medium SAND (no odor, no sheen) (medium dense, wet)	
20								
		d3		1.3				
25								
30								

Boring Completed 11/14/11
Total Depth of Boring = 25.0 ft.

Notes:
1. Stratigraphic contacts are based on field interpretations and are approximate.
2. Reference to the text of this report is necessary for a proper understanding of subsurface conditions.
3. Refer to "Soil Classification System and Key" figure for explanation of graphics and symbols.

025190.211.012 3/21/14 N:\PROJECTS\025190.211.012.GPJ SOIL BORING LOG

LANDAU ASSOCIATES

Isaacson-Thompson RIFS
Tukwila, Washington

Log of Boring SB-09

Figure
C-36

SB-10

Drilling Method: Geoprobe™

Ground Elevation (ft): 18.5 NAVD88
21.02 MLLW

Depth (ft)	Sample Number & Interval	Sampler Type	Blows/Foot	PID (ppm)	Graphic Symbol	USCS Symbol	Description	Water Level
0						AC	Asphalt	
						GP/ SP	Brown, gravelly, fine to medium SAND with silt (no odor, no sheen) (dense, damp) **(FILL)**	
		d3		0.0		AC	Brown, tine to medium SAND with trace silt (no odor, no sheen) (medium dense, damp)	
				0.0		SM	Asphalt	
5				0.0			Brown, silty, fine SAND (no odor, no sheen) (dense, damp) **(ALLUVIUM)**	
		d3		0.0 0.0 0.0		SP	Brownish gray, fine to medium SAND with trace silt (no odor, no sheen) (medium dense, damp)	
10								ATD
						SM	Brown, mottled, silty, fine SAND (no odor, no sheen) (dense, wet)	
		d3		0.0 0.0			-No mottling below 13 ft	
15								
		d3		0.0				
20						SP-SM	Gray, fine SAND with silt (no odor, no sheen) (medium dense, wet)	
		d3		0.0				
						SM	Gray, silty, fine SAND (no odor, no sheen) (dense, wet)	
25								
30								

Boring Completed 11/01/11
Total Depth of Boring = 25.0 ft.

Notes:
1. Stratigraphic contacts are based on field interpretations and are approximate.
2. Reference to the text of this report is necessary for a proper understanding of subsurface conditions.
3. Refer to "Soil Classification System and Key" figure for explanation of graphics and symbols.

025190.211.012 3/21/14 N:\PROJECTS\025190.211.012.GPJ SOIL BORING LOG

LANDAU ASSOCIATES

Isaacson-Thompson RIFS
Tukwila, Washington

Log of Boring SB-10

Figure
C-37

SB-11

SAMPLE DATA					SOIL PROFILE			GROUNDWATER
Depth (ft)	Sample Number & Interval	Sampler Type	Blows/Foot	PID (ppm)	Graphic Symbol	USCS Symbol	Drilling Method: Geoprobe™ Ground Elevation (ft): 17.8 NAVD88 20.34 MLLW	Water Level
0						AC	Asphalt	
						GP		
						SP-SM	Brown, silty, fine to medium SAND with trace gravel (no odor, no sheen) (medium dense, damp) **(FILL)**	
		d3		2.2				
						SP	Brown, gravelly, silty, fine to medium SAND (no odor, no sheen) (medium dense, moist) -Plastic sheet at 3 ft	
5							Brown, fine to medium SAND with trace silt and gravel (no odor, no sheen) (medium dense, damp)	
						SP	-Concrete fragment at 5.5 ft	
		d3		3.3			Brown, fine to medium SAND with trace silt and gravel (no odor, no sheen) (medium dense, damp) **(ALLUVIUM)**	
10								
		d3		2.9				ATD
15								
		d3		2.9		SP	Gray, fine to medium SAND with trace silt (no odor, no sheen) (medium dense, wet)	
20							-Grades to medium SAND at 21 ft	
		d3		2.3				
25								
30								

Boring Completed 11/14/11
Total Depth of Boring = 25.0 ft.

Notes:
1. Stratigraphic contacts are based on field interpretations and are approximate.
2. Reference to the text of this report is necessary for a proper understanding of subsurface conditions.
3. Refer to "Soil Classification System and Key" figure for explanation of graphics and symbols.

025190.211.012 3/21/14 N:\PROJECTS\025190.211.012.GPJ SOIL BORING LOG

SB-12

SAMPLE DATA					SOIL PROFILE			GROUNDWATER
Depth (ft)	Sample Number & Interval	Sampler Type	Blows/Foot	PID (ppm)	Graphic Symbol	USCS Symbol	Drilling Method: Geoprobe™ Ground Elevation (ft): 18.3 NAVD88 20.79 MLLW	Water Level
0						AC	Concrete	
						GP/ SM	Brown, gravelly, silty, medium SAND with occasional tan brick debris (no odor, no sheen) (very dense, damp) **(FILL)**	
		d3		2.2				
5								
		d3		1.8				
10							-Crushed rock from 11.5 to 12 ft	
		d3		6.3		WD		
						DB	Unweathered solid wood	ATD
						WD	Gray to tan gravelly brick debris (no odor, no sheen) (very dense, wet)	
15						SP	Black decomposed wood debris (no odor, no sheen) (medium dense, wet)	
							Dark brown, fine SAND with trace silt(no odor, no sheen) (medium dense, wet) **(ALLUVIUM)**	
		d3		4.2				
20							-Wood debris at 19.5 ft	
		d3		1.2				
25								
30								

Boring Completed 11/14/11
Total Depth of Boring = 25.0 ft.

Notes:
1. Stratigraphic contacts are based on field interpretations and are approximate.
2. Reference to the text of this report is necessary for a proper understanding of subsurface conditions.
3. Refer to "Soil Classification System and Key" figure for explanation of graphics and symbols.

025190.211.012 3/21/14 N:\PROJECTS\025190.211.012.GPJ SOIL BORING LOG

LANDAU ASSOCIATES

Isaacson-Thompson RIFS
Tukwila, Washington

Log of Boring SB-12

Figure
C-39

TP-101

Excavation Method: Tracked Excavator

Ground Elevation (ft): 18.76 NAVD88
20.31 MLLW

Logged By: PRR

Depth (ft)	Elevation (ft)	Sample Number & Interval	Sampler Type	PID (ppm)	Graphic Symbol	USCS Symbol	Soil Profile	Groundwater
0						AC	Asphalt	
						SP	Brown, gravelly, fine to medium SAND with trace silt (no odor, no sheen) (medium dense, damp) **(FILL)**	ATD
2			d5	0.0		SM	Brown, silty, fine to medium SAND with trace gravel and masses of silt (no odor, no sheen) (medium dense, damp	
			d5	0.0				
4			d5	0.0				
			d5	0.0				
6			d5	0.0		SP	Brownish gray, fine SAND with trace silt (no odor, no sheen) (medium dense, damp) **(ALLUVIUM)**	
			d5	0.0				
8			d5	0.0				
			d5	0.0		SP-SM	Brownish gray, fine SAND with silt (no odor, no sheen) (medium dense, damp)	
10			d5	0.0		SM	Gray, mottled, silty, fine SAND (no odor, no sheen) (medium dense, damp)	
			d5	0.0		SP	Brownish gray, fine SAND with trace silt (no odor, no sheen) (medium dense, moist to wet)	
12			d5	0.0			-Mottled from 12 to 13 ft	
14								

Test Pit Completed 10/24/11
Total Depth of Test Pit = 13.0 ft.

Notes:
1. Stratigraphic contacts are based on field interpretations and are approximate.
2. Reference to the text of this report is necessary for a proper understanding of subsurface conditions.
3. Refer to "Soil Classification System and Key" figure for explanation of graphics and symbols.

LANDAU ASSOCIATES

Isaacson-Thompson RIFS
Tukwila, Washington

Log of Test Pit TP-101

Figure
C-40

TP-102

Excavation Method: Tracked Excavator
Ground Elevation (ft): 18.97 NAVD88 / 21.45 MLLW
Logged By: PRR

Depth (ft)	Elevation (ft)	Sample Number & Interval	Sampler Type	PID (ppm)	Graphic Symbol	USCS Symbol	Soil Profile	Groundwater
0						AC	Asphalt	Groundwater not encountered.
						GP	Brown, sandy, GRAVEL with silty (no odor, no sheen) (dense, damp) **(FILL)**	
						SP	Brown, gravelly, fine to medium SAND with trace silt (no odor, no sheen) (medium dense, damp)	
2			d5	0.0				
			d5	0.3		SP-SM	Brown, fine SAND with silt and lumps of mottled silt and trace gravel (no odor, no sheen) (medium dense, damp)	
4			d5	0.2				
			d5	0.0				
6			d5	0.1		SP	Brownish gray, fine SAND with trace silt and organics (no odor, no sheen) (medium dense, damp) **(ALLUVIUM)**	
			d5	0.2				
8			d5	0.6				
			d5	0.1			-Trace mottling at 9 ft	
10			d5	0.5				
			d5	0.5				
12			d5	0.4				
			d5	0.5			-Moist to wet at 13 ft	
14								

Test Pit Completed 10/25/11
Total Depth of Test Pit = 14.0 ft.

Notes:
1. Stratigraphic contacts are based on field interpretations and are approximate.
2. Reference to the text of this report is necessary for a proper understanding of subsurface conditions.
3. Refer to "Soil Classification System and Key" figure for explanation of graphics and symbols.

025190.211.012 3/21/14 N:\PROJECTS\025190.211.012.GPJ SINGLE TEST PIT LOG

LANDAU ASSOCIATES

Isaacson-Thompson RIFS
Tukwila, Washington

Log of Test Pit TP-102

Figure C-41

TP-103

Excavation Method: Tracked Excavator
Ground Elevation (ft): 19.14 NAVD88 / 21.62 MLLW
Logged By: PRR

Depth (ft)	Elevation (ft)	Sample Number & Interval	Sampler Type	PID (ppm)	Graphic Symbol	USCS Symbol	Soil Profile	Groundwater
0						AC	Asphalt	Groundwater not encountered.
						GP	Brown, sandy, GRAVEL with silt (no odor, no sheen) (dense, damp) **(FILL)**	
						SP	Brown, fine to medium SAND with trace silt, gravel, and occasional chunks of mottled silt (no odor, no sheen) (medium dense, damp)	
2			d5	0.0				
			d5	0.2				
4			d5	0.1				
			d5	0.2		SP-SM	Gray, fine SAND with silt, brick and wood debris (no odor, no sheen) (medium dense, damp)	
6						SP	Brown to gray, fine SAND with trace silt (no odor, no sheen) (medium dense, damp) **(ALLUVIUM)**	
			d5	0.8				
			d5	0.2				
8			d5	0.1				
			d5	0.6				
10			d5	0.5				
			d5	0.0			-Mottling at 11.5 ft	
12							-Moist to wet at 12 ft	
			d5	0.0				
14								

Test Pit Completed 10/25/11
Total Depth of Test Pit = 13.0 ft.

Notes:
1. Stratigraphic contacts are based on field interpretations and are approximate.
2. Reference to the text of this report is necessary for a proper understanding of subsurface conditions.
3. Refer to "Soil Classification System and Key" figure for explanation of graphics and symbols.

025190.211.012 3/21/14 N:\PROJECTS\025190.211.012.GPJ SINGLE TEST PIT LOG

LANDAU ASSOCIATES

Isaacson-Thompson RIFS
Tukwila, Washington

Log of Test Pit TP-103

Figure C-42

TP-104

Excavation Method: Tracked Excavator

Ground Elevation (ft): 18.54 NAVD88
21.02 MLLW

Logged By: PRR

Depth (ft)	Elevation (ft)	Sample Number & Interval	Sampler Type	PID (ppm)	Graphic Symbol	USCS Symbol	Soil Profile	Groundwater
0						AC	Asphalt	
						GP	Brown, sandy, GRAVEL (no odor, no sheen) (dense, damp) **(FILL)**	
						SP-SM	Gray, mottled, fine SAND with silt (no odor, no sheen) (dense, damp)	
2			d5	0.0				
						SP	Brown, speckled, fine to medium SAND with gravel and trace silt (no odor, no sheen) (medium dense, damp)	
			d5	0.0				
4								
			d5	0.1			-Asbestos pipe encountered in norther portion of test pit, running east-west. Pipe was punctured with water flowing out of it.	
			d5	0.1			-Wood debris at 5.5 ft	
6						SM	Gray, silty, fine SAND with trace organics (no odor, no sheen) (medium dense, damp) **(ALLUVIUM)**	
			d5	0.1				
						SP	Light brown, fine SAND with trace gravel and silt, and interspersed thin layers of silty gray fine sand less than 0.5 inch thick (no odor, no sheen) (medium dense, damp)	
			d5	0.2				
8								
			d5	0.5				
						SP	Gray, fine SAND with trace silt (no odor, no sheen) (medium dense, damp)	
			d5	0.3				
10								
			d5	0.2		ML SP	0.5 inch thick layer of black sandy SILT with organics and wood debris (no odor, no sheen) (medium dense, damp)	
			d5	0.4			Gray, fine SAND with trace silt (no odor, no sheen) (medium dense, damp)	
12							-Moist to wet at 12 ft	
			d5	0.1				
								Slow Seepage groundwater seepage encountered at 13.0 ft.
14								

Test Pit Completed 10/27/11
Total Depth of Test Pit = 13.0 ft.

Notes:
1. Stratigraphic contacts are based on field interpretations and are approximate.
2. Reference to the text of this report is necessary for a proper understanding of subsurface conditions.
3. Refer to "Soil Classification System and Key" figure for explanation of graphics and symbols.

025190.211.012 3/21/14 N:\PROJECTS\025190.211.012.GPJ SINGLE TEST PIT LOG

TP-105

SAMPLE DATA					SOIL PROFILE			GROUNDWATER
Depth (ft)	Elevation (ft)	Sample Number & Interval	Sampler Type	PID (ppm)	Graphic Symbol	USCS Symbol	Excavation Method: Tracked Excavator Ground Elevation (ft): 18.40 NAVD88 20.88 MLLW Logged By: PRR	
0						AC	Asphalt	Groundwater not encountered.
						GP	Brown, sandy, GRAVEL with silt (no odor, no sheen) (dense, damp) **(FILL)**	
2			d5	0.0				

Test Pit Completed 10/26/11
Total Depth of Test Pit = 3.0 ft.

-12-18 inch metal pipe encountered running north-south from building 14-02. Soil around pipe steaming and warm.

4
6
8
10
12
14

Notes:
1. Stratigraphic contacts are based on field interpretations and are approximate.
2. Reference to the text of this report is necessary for a proper understanding of subsurface conditions.
3. Refer to "Soil Classification System and Key" figure for explanation of graphics and symbols.

025190.211.012 3/21/14 N:\PROJECTS\025190.211.012.GPJ SINGLE TEST PIT LOG

TP-105B

Excavation Method: Tracked Excavator

Ground Elevation (ft): 18.40 NAVD88
20.92 MLLW

Logged By: PRR

Depth (ft)	Elevation (ft)	Sample Number & Interval	Sampler Type	PID (ppm)	Graphic Symbol	USCS Symbol	Soil Profile	Groundwater
0						AC	Asphalt	Groundwater not encountered.
						GP	Brown, sandy, GRAVEL with silt (no odor, no sheen) (dense, damp) **(FILL)**	
						SP-SM	Brown, fine to medium SAND with silt and silty chunks (no odor, no sheen) (medium dense, damp)	
2			d5	0.6				
			d5	0.3				
4						SP	Brownish gray, fine SAND with gravel and trace silt (no odor, no sheen) (medium dense, damp)	
			d5	0.7				
			d5	0.1				
6						SP-SM	Gray, fine SAND with silt and trace organics and wood fragments (no odor, no sheen) (medium dense, damp) **(ALLUVIUM)** -Silty lenses from 7 to 8 ft	
			d5	0.2				
			d5	0.3				
8						SP	Dark gray, fine to medium SAND with trace silt (no odor, no sheen) (medium dense, damp) -Thin black silt with wood fragments layer	
			d5	0.4				
			d5	0.3				
10						SM	Gray, silty , fine SAND with organics (no odor, no sheen) (medium dense, damp)	
			d5	0.7				
						SP	Gray, tine to medium SAND with trace silt, gravel, and wood fragments (no odor, no sheen) (medium dense, moist to wet)	
			d5	0.4				
12								
14								

Test Pit Completed 10/27/11
Total Depth of Test Pit = 12.0 ft.

Notes:
1. Stratigraphic contacts are based on field interpretations and are approximate.
2. Reference to the text of this report is necessary for a proper understanding of subsurface conditions.
3. Refer to "Soil Classification System and Key" figure for explanation of graphics and symbols.

025190.211.012 3/21/14 N:\PROJECTS\025190.211.012.GPJ SINGLE TEST PIT LOG

TP-106

SAMPLE DATA					SOIL PROFILE			GROUNDWATER
Depth (ft)	Elevation (ft)	Sample Number & Interval	Sampler Type	PID (ppm)	Graphic Symbol	USCS Symbol	Excavation Method: Tracked Excavator Ground Elevation (ft): 18.19 NAVD88 20.67 MLLW Logged By: PRR	
0						AC	Asphalt	Groundwater not encountered.
						GP	Brown, sandy, GRAVEL with silt (no odor, no sheen) (medium dense, damp)	
							(FILL)	
						SP-SM	Gray, fine to medium SAND with silt and gravel and trace wood fragments (no odor, no sheen) (medium dense, damp)	
2			d5	0.0				
			d5	0.1				
4							-Encountered concrete slab approximately 2 ft thick at 4.5 ft	
6								
8								
10								
12								
14								

Test Pit Completed 10/26/11
Total Depth of Test Pit = 4.5 ft.

Notes:
1. Stratigraphic contacts are based on field interpretations and are approximate.
2. Reference to the text of this report is necessary for a proper understanding of subsurface conditions.
3. Refer to "Soil Classification System and Key" figure for explanation of graphics and symbols.

025190.211.012 3/21/14 N:\PROJECTS\025190.211.012.GPJ SINGLE TEST PIT LOG

LANDAU ASSOCIATES

Isaacson-Thompson RIFS
Tukwila, Washington

Log of Test Pit TP-106

Figure
C-46

TP-106B

Excavation Method: Tracked Excavator

Ground Elevation (ft): 18.19 NAVD88
20.67 MLLW

Logged By: PRR

Depth (ft)	Elevation (ft)	Sample Number & Interval	Sampler Type	PID (ppm)	Graphic Symbol	USCS Symbol	Soil Profile	Groundwater
0						AC	Asphalt	Groundwater not encountered.
						GP	Brown, sandy, GRAVEL with silt (no odor, no sheen) (dense, damp)	
						SM	**(FILL)** Gray, silty, fine SAND with gravel and trace organics (no odor, no sheen) (medium dense, damp)	
2			d5	0.7				
			d5	0.4				
4						SP-SM	Light gray, fine to medium SAND with silt and gravel (no odor, no sheen) (medium dense, damp)	
			d5	0.5				
			d5	0.6				
6						SP/SM	Gray, fine SAND with gravel and silt to silty and trace organics (no odor, no sheen) (medium dense, damp) **(ALLUVIUM)**	
			d5	0.6				
						SP	Gray, fine SAND with trace silt and wood fragments (no odor, no sheen) (medium dense, damp)	
			d5	0.7				
8								
			d5	0.8				
			d5	0.6			-1 inch layer of sandy silt at 9.5 ft	
10								
			d5	0.4				
			d5	0.5				
12								
14								

Test Pit Completed 10/28/11
Total Depth of Test Pit = 12.0 ft.

Notes:
1. Stratigraphic contacts are based on field interpretations and are approximate.
2. Reference to the text of this report is necessary for a proper understanding of subsurface conditions.
3. Refer to "Soil Classification System and Key" figure for explanation of graphics and symbols.

025190.211.012 3/21/14 N:\PROJECTS\025190.211.012.GPJ SINGLE TEST PIT LOG

TP-107

Excavation Method: Tracked Excavator

Ground Elevation (ft): 17.99 NAVD88
20.47 MLLW

Logged By: PRR

Depth (ft)	Elevation (ft)	Sample Number & Interval	Sampler Type	PID (ppm)	Graphic Symbol	USCS Symbol	Soil Profile	Groundwater
0						AC	Asphalt	Groundwater not encountered.
						GP	Gray, sandy, GRAVEL with silt (no odor, no sheen) (dense, damp)	
						SP-SM	**(FILL)**	
			d5	0.0			Dark brown to black, fine to medium SAND with silt and gravel and trace burnt wood and wood fragments (mild oil-like odor, no sheen) (dense, damp)	
2						SP		
			d5	0.1			Brown, fine SAND with trace silt (no odor, no sheen) (medium dense, damp)	
			d5	0.2				
4								
			d5	0.5				
			d5	0.3				
6						SP-SM	Brown, mottled, fine SAND with silt (no odor, no sheen) (medium dense, damp)	
			d5	0.5				
			d5	0.8				
8								
			d5	0.5				
						ML	Gray, mottled, sandy, SILT (no odor, no sheen) (medium stiff, damp)	
			d5	0.4				
10						SP-SM	Brownish gray, fine SAND with silt and silty lenses (no odor, no sheen) (medium dense, moist) **(ALLUVIUM)**	
			d5	0.3				
			d5	0.3				
12							-Wet at 12 ft	
14								

Test Pit Completed 10/26/11
Total Depth of Test Pit = 12.0 ft.

Notes:
1. Stratigraphic contacts are based on field interpretations and are approximate.
2. Reference to the text of this report is necessary for a proper understanding of subsurface conditions.
3. Refer to "Soil Classification System and Key" figure for explanation of graphics and symbols.

025190.211.012 3/21/14 N:\PROJECTS\025190.211.012.GPJ SINGLE TEST PIT LOG

TP-108

Excavation Method: Tracked Excavator
Ground Elevation (ft): 18.10 NAVD88
20.58 MLLW
Logged By: PRR

Depth (ft)	Elevation (ft)	Sample Number & Interval	Sampler Type	PID (ppm)	Graphic Symbol	USCS Symbol	Soil Profile	Groundwater
0						AC	Asphalt	Groundwater not encountered.
						GP	Brown, sandy, GRAVEL with silt (no odor, no sheen) (dense, damp) **(FILL)**	
			d5	0.1		DB	Dark brown to black, tar and asphalt-like waste material, bricks, burnt wood, with fine sand and silt (oil odor, no sheen) (dense, damp)	
2			d5	0.2		SP	Brownish gray, fine SAND (no odor, no sheen) (medium dense, damp)	
			d5	0.2		SP	Brown, fine SAND with trace silt (no odor, no sheen) (medium dense, damp)	
4			d5	0.3		SP	Speckled brown, fine SAND with trace silt (no odor, no sheen) (medium dense, damp)	
			d5	0.2				
6			d5	0.5		SP/SM	Brown, fine SAND with silt to silty fine SAND with trace organics (no odor, no sheen) (medium dense, damp) **(ALLUVIUM)**	
			d5	0.4				
8			d5	0.1				
			d5	0.1				
10			d5	0.2		SM	Brown, mottled, silty, fine SAND with trace roots (no odor, no sheen) (medium dense, damp to moist)	
			d5	0.1		SP	Speckled brown, fine SAND (no odor, no sheen) (medium dense, moist to wet)	
12								
14								

Test Pit Completed 10/26/11
Total Depth of Test Pit = 12.0 ft.

Notes:
1. Stratigraphic contacts are based on field interpretations and are approximate.
2. Reference to the text of this report is necessary for a proper understanding of subsurface conditions.
3. Refer to "Soil Classification System and Key" figure for explanation of graphics and symbols.

025190.211.012 3/21/14 N:\PROJECTS\025190.211.012.GPJ SINGLE TEST PIT LOG

TP-109

SAMPLE DATA					SOIL PROFILE			GROUNDWATER
Depth (ft)	Elevation (ft)	Sample Number & Interval	Sampler Type	PID (ppm)	Graphic Symbol	USCS Symbol	Excavation Method: Tracked Excavator Ground Elevation (ft): 17.66 NAVD88 20.14 MLLW Logged By: PRR	
0						AC	Asphalt	
						GP	Brown, sandy, GRAVEL with trace silt (no odor, no sheen) (medium dense, damp)	Groundwater not encountered.
						SP	**(FILL)** Brown, fine to medium SAND with gravel and trace silt and wood fragments (no odor, no sheen) (medium dense, damp) [fill]	
2			d5	0.0				
						SP	Brown, fine to medium SAND (no odor, no sheen) (medium dense, damp)	
			d5	0.2				
4							-Gray below 4 ft	
			d5	0.2				
			d5	0.4				
6								
			d5	0.0				
			d5	0.0				
8							-Trace gravel at 8 ft	
			d5	0.0				
			d5	0.4				
10							-Excavation stopped due to collapsing sidewalls	
12								
14								

Test Pit Completed 10/25/11
Total Depth of Test Pit = 10.0 ft.

Notes:
1. Stratigraphic contacts are based on field interpretations and are approximate.
2. Reference to the text of this report is necessary for a proper understanding of subsurface conditions.
3. Refer to "Soil Classification System and Key" figure for explanation of graphics and symbols.

025190.211.012 3/21/14 N:\PROJECTS\025190.211.012.GPJ SINGLE TEST PIT LOG

APPENDIX D

Source Material Sampling and Evaluation Technical Memoranda

TECHNICAL MEMORANDUM

LANDAU ASSOCIATES
ENVIRONMENTAL | GEOTECHNICAL | NATURAL RESOURCES

TO: James Bet, The Boeing Company

FROM: Stacy Lane, L.G. and Kristy J. Hendrickson, P.E.

DATE: March 13, 2012

RE: SOURCE MATERIAL SAMPLING AND ANALYSIS PLAN
BOEING ISAACSON-THOMPSON SITE
TUKWILA, WASHINGTON

This document presents a plan for investigating source materials at the Boeing Isaacson-Thompson site (Site) in Tukwila, Washington. The investigation is part of a remedial investigation (RI) and feasibility study (FS) being conducted at the Site under an Agreed Order (No. DE7088) between The Boeing Company (Boeing) and the Washington State Department of Ecology (Ecology). A work plan for conducting the RI/FS was previously prepared and approved by Ecology (Landau Associates 2011). In accordance with the work plan, samples of building and other potential source materials will be collected and submitted for laboratory analysis if exceedances of the Sediment Management Standards (SMS) criteria are found in the storm drain system solids. In September 2011, 36 samples of the solids present in the storm drain system were collected and submitted for laboratory analysis. A summary of the analytical results and a comparison of the results to the SMS criteria are presented in Table 1. Because the total organic carbon (TOC) results for the solids samples are generally greater than 4 percent, the results were not organic carbon normalized and, instead, the dry weight results were compared to the SMS dry weight equivalent criteria – the Lower Apparent Effects Threshold (LAET) and 2 LAET values.

As shown in Table 1, metals, polychlorinated biphenyls (PCBs), and semivolatile compounds (SVOCs), primarily phthalates and benzyl alcohol, are present in some solids at concentrations exceeding the SMS criteria. The locations of the storm drain structures where metals and PCB concentrations exceeded SMS criteria are presented on Figures 1 and 2, respectively, and the locations of the structures where benzyl alcohol concentrations exceeded SMS criteria are presented on Figure 3. In accordance with the RI/FS work plan, samples of building or other source materials that are located near the locations where the exceedances occurred will be collected for laboratory analysis. However, because phthalates and benzyl alcohol were detected in the solids at concentrations exceeding the SMS criteria at numerous locations throughout the site and because these compounds are ubiquitous in the environment, the presence of these compounds in the storm drain solids does not appear to be the result of Site sources and, therefore, source material samples will not be collected for SVOC analyses.

As shown on Figures 1 and 2, metals (cadmium, chromium, mercury, and zinc) and PCBs were detected at concentrations exceeding the SMS criteria in samples from catch basins located around

Building 14-01 and in five other areas identified as Building 14-12 Area, Building 14-02/14-03 Area, West Isaacson Area, East Isaacson Area, and Former Building 14-15 Area. Table 2 summarizes the planned media and number of samples to be collected around Building 14-01 and within the five areas. The table also identifies the planned analyses and the reasons for the selected analyses.

Building and other potential source material samples previously collected and analyzed that will be used to evaluate potential contaminant sources in the solids include six samples of concrete joint material. The samples were collected in May 2011 and analyzed for PCBs. The locations of these samples are shown on Figure 2 and the results are summarized in Table 3.

Implementation of this sampling and analysis plan will be conducted following Ecology's concurrence. Sample collection will be conducted using the procedures specified in the RI/FS work plan. The results of the investigation will be provided in the RI/FS report.

REFERENCES

Landau Associates. 2011. *Final Work Plan, Remedial Investigation/Feasibility Study, Boeing Isaacson-Thompson Site, Tukwila, Washington.* Prepared for The Boeing Company. September 16.

KJH/kes/tam
3/13/12 \\edmdata01\projects\025\190\002\FileRm\R\Source Material Sampling\Boeing-I-T_Landau_031312_Source Material Sampling Technical Memorandum.docx

ATTACHMENTS

Figure 1 – Metals in Catch Basin Solids
Figure 2 – PCBs in Catch Basin Solids
Figure 3 – Benzyl Alcohol in Catch Basin Solids
Table 1 – 2011 Storm Drain Solids Screening Level Comparison
Table 2 – Source Sample Planning
Table 3 – Concrete Joint Material Sample Analytical Results – May/June 2011

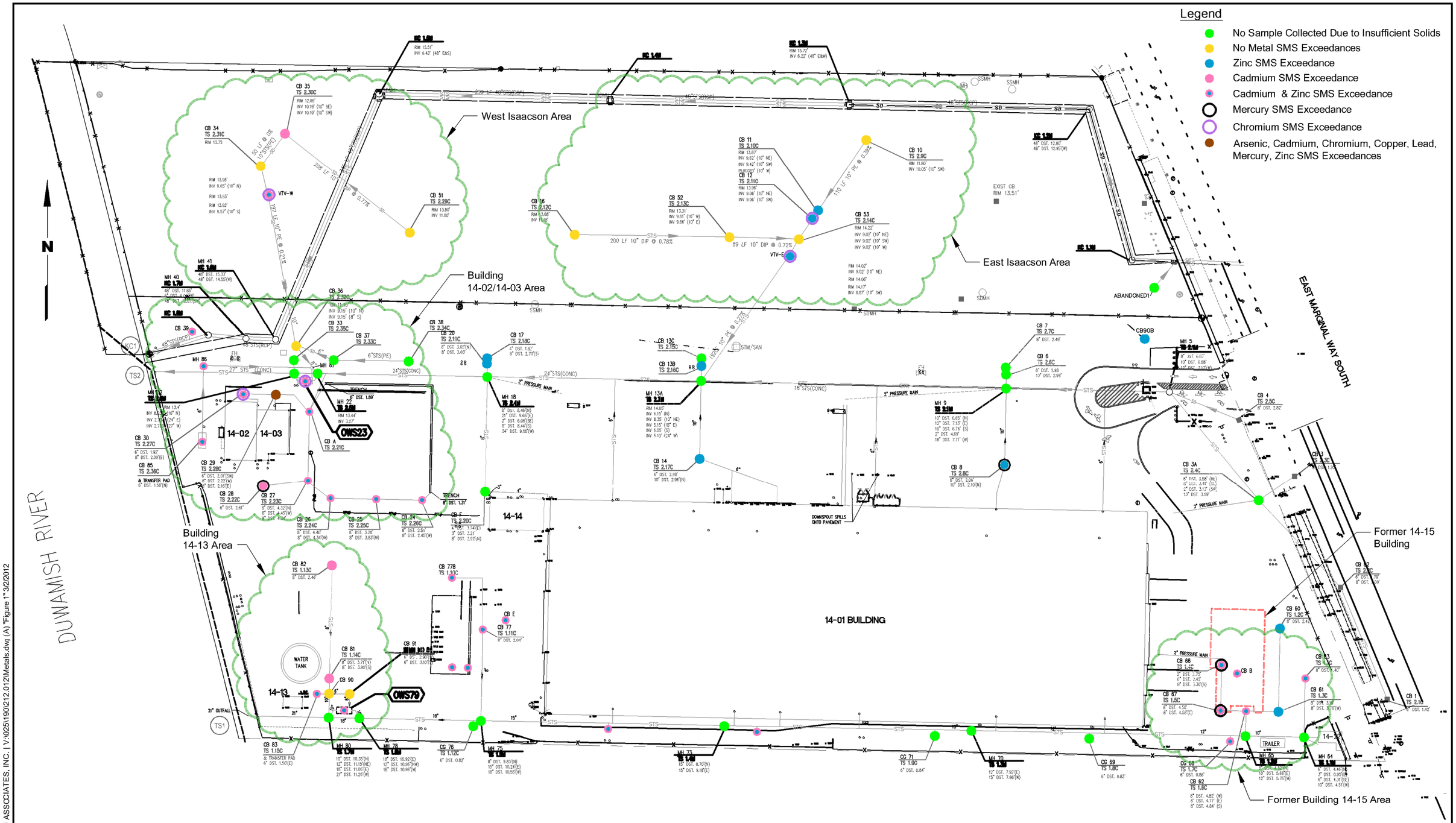

Source: Boeing 2011

Note

1. Black and white reproduction of this color original may reduce its effectiveness and lead to incorrect interpretation.

Boeing Isaacson-Thompson Site Tukwila, Washington	**Metals in Catch Basin Solids**	Figure 1

LANDAU ASSOCIATES

LANDAU ASSOCIATES, INC. | V:\025\190\212.012\Metals.dwg (A) "Figure 1" 3/2/2012

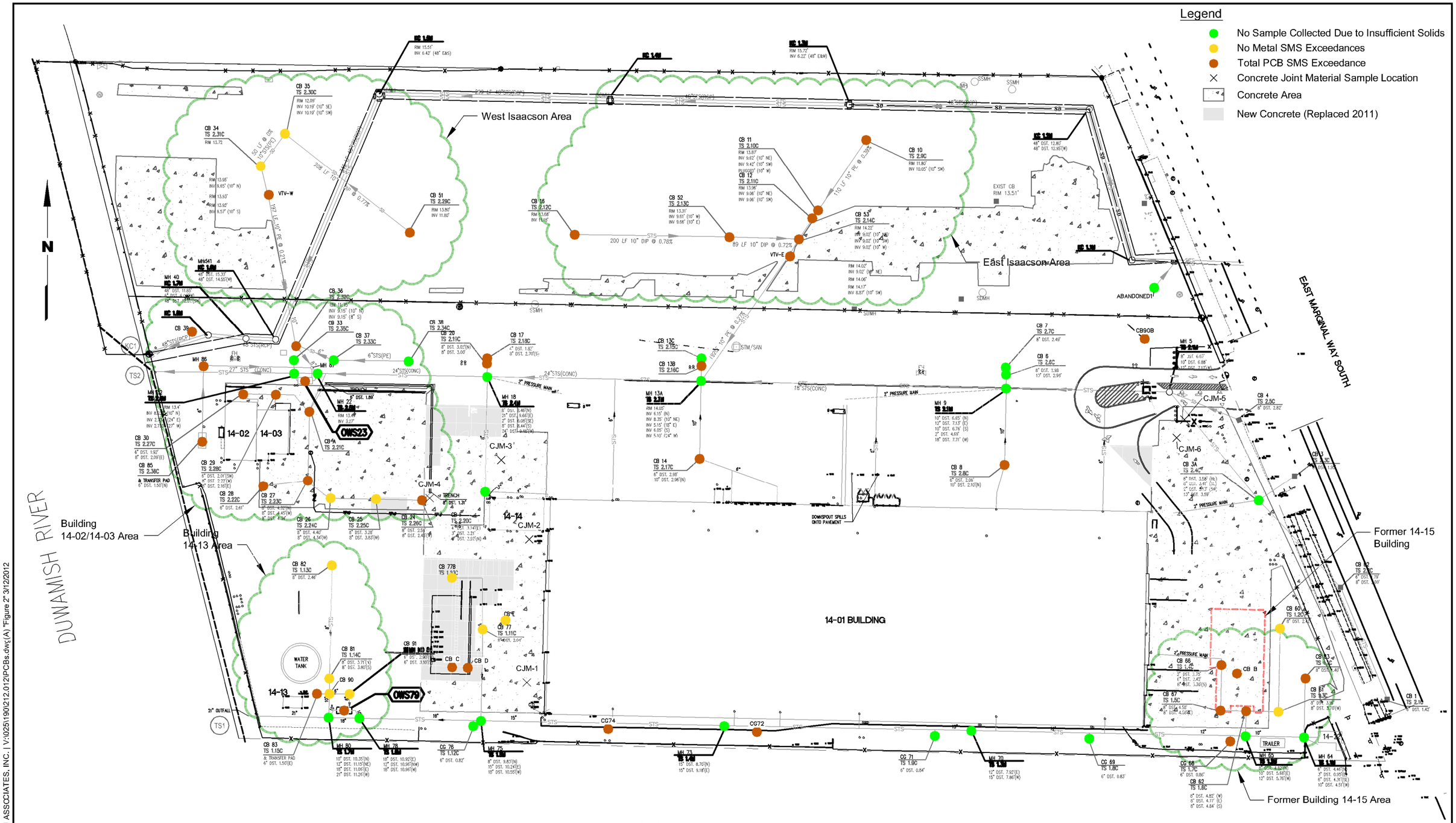

Note

1. Black and white reproduction of this color original may reduce its effectiveness and lead to incorrect interpretation.

Source: Boeing 2011

Boeing Isaacson-Thompson Site Tukwila, Washington	**PCBs in Catch Basin Solids**	Figure 2

LANDAU ASSOCIATES

LANDAU ASSOCIATES, INC. | V:\0251\190\212.012\PCBs.dwg(A) "Figure 2" 3/12/2012

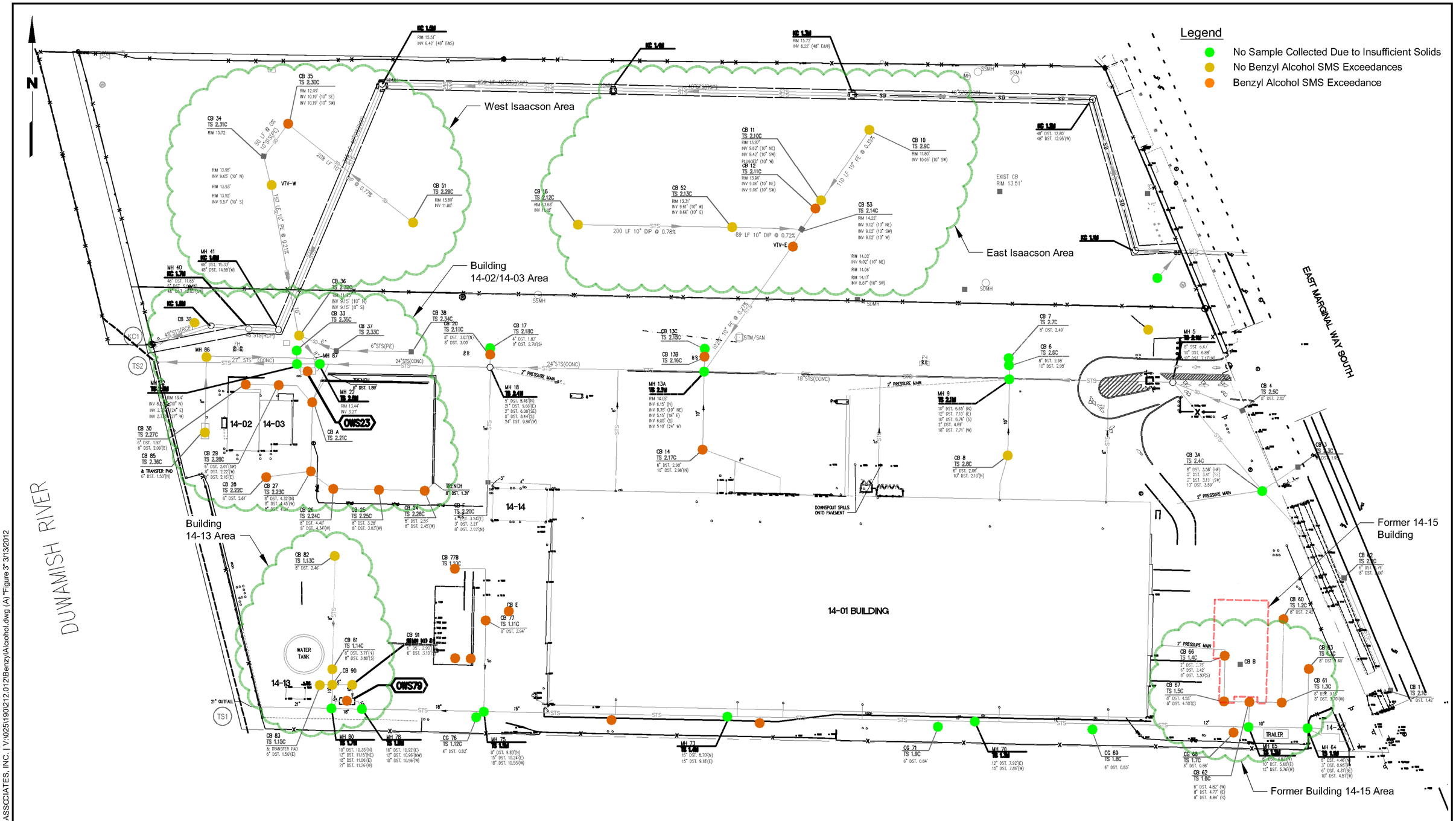

Source: Boeing 2011

0 120 240
Scale in Feet

Note

1. Black and white reproduction of this color original may reduce its effectiveness and lead to incorrect interpretation.

Boeing
Isaacson-Thompson Site
Tukwila, Washington

Benzyl Alcohol in Catch Basin Solids

Figure
3

LANDAU ASSOCIATES

LANDAU ASSOCIATES, INC. | V:\025\1901212.012\Benzyl\Alcohol.dwg (A) "Figure 3" 3/13/2012

TABLE 1
2011 STORM DRAIN SOLIDS SCREENING LEVEL COMPARISON
ISAACSON THOMPSON

	Dry Weight Equivalent to SMS Criteria (a) SQS/LAET (b)	CSL/2LAET (c)	IT-CB8 TL74D 09/09/2011	IT-CB10 TL84F 09/12/2011	IT-CB11 TL84E 09/12/2011	IT-CB12 TL84D 09/12/2011	IT-CB13B/14 TL53K 09/08/2011	IT-CB17 TL74F 09/09/2011	IT-CB20 TL74C 09/09/2011	IT-CB24 TL74G 09/09/2011	IT-CB25 TL74H 09/09/2011	IT-CB26 TL74I 09/09/2011	IT-CB27 TL74E 09/09/2011	IT-CB28 TO80A 9/28/2011	IT-CB29 TL29B 09/07/2011	IT-CB30 TL29C 09/07/2011	IT-CB34 TL84A 09/12/2011	IT-CB35 TL84B 09/12/2011	IT-CB36 TL74B 09/09/2011
TOTAL METALS (mg/kg)																			
EPA200.8/SW7471A																			
Arsenic	57	93	14.1	33.9	17.2	32.4	9.6	7.9	9.0	13.1	11.7	14.1	10.8	19.3	58.0	18.3	5.7	15.2 J	8.2
Cadmium	5.1	6.7	1.9	0.8	1.3	2.5	1.6	2.7	4.3	25.2	13.8	17.3	15.5	23.7	38.1	9.0	2.1	7.3 J	2.1
Chromium	260	270	142	92.3	152	373	66.3	49.5	79.6	116	97.1	106	61.9	200	492	388	59	207 J	45.8
Copper	390	390	78.0	73.8	108	251	67.7	53.4	80.2	168	114	124	78.00	202	606	258	30.5	80.6 J	50.2
Lead	450	530	148	59.8	201	437	178	75.6	158	108	98.9	96.8	55.1	147	568	246	13.2	50.1 J	41.4
Mercury	0.41	0.59	0.63	0.07	0.11	0.15	0.31	0.04	0.07	0.11	0.18	0.12	0.12	1.57	0.72	0.23	0.03 U	0.02	0.04
Silver	6.1	6.1	0.3	0.2	0.2	0.5	0.3 U	0.3 U	0.2	1.0	1.1	0.5	0.3	0.7	1.9	1.1	0.2 U	0.3 U	0.3 U
Zinc	410	960	880	278	640	1100	620	610	760	1120	1000	1530	1860	2390	6640	2240	132	384 J	380
PAHs (µg/kg-dry wt)																			
SW8270DSIM																			
Naphthalene	2100	2100	87 U	220	90	190	160 J	NA	59 U	78	75	58 U	14	61	760 J	110	46 U	47 U	98 U
Acenaphthylene	1300	1300	87 U	140 U	25 J	58	230 U	NA	59 U	35	60 U	58 U	14 U	24	440 J	84	46 U	47 U	98 U
Acenaphthene	500	500	87 U	130 J	110	140	120 J	NA	59 U	66	45 J	39 J	9.0 J	34	750 J	110	46 U	47 U	98 U
Fluorene	540	540	87 U	140	120	190	140 J	NA	59 U	80	50 J	45 J	13 J	59	1100 J	150	46 U	47 U	98 U
Phenanthrene	1500	1500	260	940	2000	1500	1300	NA	370	800	570	440	190	780	9600	1900	46 U	140	180
Anthracene	960	960	87 U	120 J	130	120	140 J	NA	37 J	69	73	41 J	19	74	1300 J	270	46 U	47 U	98 U
2-Methylnaphthalene	670	670	87 U	100 J	33 J	170	230 U	NA	32 J	54	76	42 J	12 J	39	460 J	59	46 U	34 J	98 U
LPAH (d,e)	5200	5200	260	1550	2475	2198	1860	NA	407	1128	813	565	245	1032	13950 J	2624	46 U	140	180
Fluoranthene	1700	2500	350	1200	2800	1900	1300	NA	700	1200	880	660	370	1200	15000	3000	29 J	170	210
Pyrene	2600	3300	300	1200	2000	1300	1100	NA	580	880	740	480	290	900	12000	2600	26 J	170	240
Benzo(a)anthracene	1300	1600	130	380	730	430	470	NA	220	310	290	170	120	350	3900	1000	46 U	40 J	120
Chrysene	1400	2800	300	740	1200	1100	860	NA	480	560	600	350	210	630	8400	3400	100	250	330
Total Benzofluoranthenes (d, f)	3200	3600	320	780	1700	1400	810	NA	550	780	650	500	300	780	12000	4200	46 U	150	280
Benzo(a)pyrene	1600	1600	120	340	800	550	420	NA	230	340	280	200	140	370	4800	1000	46 U	75	140
Indeno(1,2,3-cd)pyrene	600	690	69 J	300	550	460	320	NA	120	200	200	110	72	260	3700	970	46 U	56	98 U
Dibenz(a,h)anthracene	230	230	87 U	77 J	140	120	230 U	NA	69	51	39 J	58 U	20	84	1100 J	250	46 U	52	98 U
Benzo(g,h,i)perylene	670	720	140	480	640	560	430	NA	220	260	280	160	99	300	3900	950	67	120	130
HPAH (d, g)	12000	17000	1729	5497	10560	7820	5710	NA	3169	4581	3959	2630	1621	4874	64800	17370	222	1083	1450
SVOCs (µg/kg-dry wt)																			
SW8270D																			
1,2-Dichlorobenzene	35	50	110 U	280 U	280 U	220 U	470 U	NA	94 U	280 U	300 U	290 U	90 U	230 U	59 U	59 U	94 U	180 U	120 U
1,4-Dichlorobenzene	110	110	110 U	280 U	280 U	220 U	470 U	NA	94 U	280 U	300 U	290 U	90 U	230 U	59 U	59 U	94 U	180 U	120 U
1,2,4-Trichlorobenzene	31	51	110 U	280 U	280 U	220 U	470 U	NA	94 U	280 U	300 U	290 U	90 U	230 U	59 U	59 U	94 U	180 U	120 U
Hexachlorobenzene	22	70	110 U	280 U	280 U	220 U	470 U	NA	94 U	280 U	300 U	290 U	90 U	230 U	59 U	59 U	94 U	180 U	120 U
Dimethylphthalate	71	160	110 U	280 U	280 U	220 U	470 U	NA	94	230 J	160 J	260 J	160	290	1500	450	94 U	180 U	120 U
Diethylphthalate	200	1200	280 U	700 U	710 U	550 U	1200 U	NA	240 U	710 U	750 U	730 U	230 U	580 U	150 U	150 U	230 U	460 U	300 U
Di-n-Butylphthalate	1400	5100	110 U	280 U	280 U	430	470 U	NA	410	360	510	600	380	800	610	110	94 U	180 U	120 U
Butylbenzylphthalate	63	900	160	350 J	280 U	470 J	470 U	NA	450	3100	1500	1400	750	1100	2200	1100	94 U	310 J	120 U
bis(2-Ethylhexyl)phthalate	1300	3100	3300	720	880	3000	4700	NA	9800	6000	5000	11000	3700	3500	13000	2300	210	3000	1200
Di-n-Octyl phthalate	6200	6200	500	280 U	280 U	220 U	470 U	NA	3000	500	430	230 J	54 J	240	59 U	59 U	94 U	130 J	120 U
Dibenzofuran	540	540	110 U	350	1100	130 J	470 U	NA	94 U	280 U	300 U	290 U	90 U	230 U	320	130	94 U	180 U	120 U
Hexachlorobutadiene	11	120	560 U	1400 U	1400 U	1100 U	2400 U	NA	470 U	1400 U	1500 U	1500 U	450 U	1200 U	300 U	300 U	470 U	910 U	610 U
N-Nitrosodiphenylamine	28	40	110 U	280 U	280 U	220 U	470 U	NA	94 U	280 U	300 U	290 U	90 U	230 U	59 U	59 U	94 U	180 U	120 U
SVOCs (µg/kg-dry wt)																			
SW8270D																			
Phenol	420	1200	62	280 U	280 U	300	470 U	NA	120	280 U	300 U	190 J	90 U	170 J	320	180	94 U	120 J	120 U
2-Methylphenol	63	63	110 U	280 U	280 U	220 U	470 U	NA	94 U	280 U	300 U	290 U	90 U	230 U	59 U	59 U	94 U	180 U	120 U
4-Methylphenol	670	670	230	560 U	570 U	760	570 J	NA	85 J	260 J	190 J	320 J	180 U	990	500	140	190 U	410	67 J
2,4-Dimethylphenol	29	29	220 U	560 U	570 U	440 U	950 U	NA	190 U	570 U	600 U	580 U	180 U	460 U	120 U	120 U	190 U	360 U	240 U
Pentachlorophenol	360	690	1100 U	2800 U	2800 U	2200 U	4700 U	NA	940 U	2800 U	3000 U	2900 U	900 U	2300 U	590 U	590 U	940 U	1800 U	1200 U
Benzyl Alcohol	57	73	56	280 U	280 U	240	240 J	NA	16000	840	520	550	110	310	150	130	94 U	140 J	120 U
Benzoic Acid	650	650	2200 U	5600 U	5700 U	1400 J	9500 UJ	NA	560 J	5700 U	6000 U	5800 U	1800 U	4600 U	770 J	590 J	1900 U	1600 J	2400 U

TABLE 1
2011 STORM DRAIN SOLIDS SCREENING LEVEL COMPARISON
ISAACSON THOMPSON

	Dry Weight Equivalent to SMS Criteria (a)		IT-CB8	IT-CB10	IT-CB11	IT-CB12	IT-CB13B/14	IT-CB17	IT-CB20	IT-CB24	IT-CB25	IT-CB26	IT-CB27	IT-CB28	IT-CB29	IT-CB30	IT-CB34	IT-CB35	IT-CB36
			TL74D	TL84F	TL84E	TL84D	TL53K	TL74F	TL74C	TL74G	TL74H	TL74I	TL74E	TO80A	TL29B	TL29C	TL84A	TL84B	TL74B
	SQS/LAET (b)	CSL/2LAET (c)	09/09/2011	09/12/2011	09/12/2011	09/12/2011	09/08/2011	09/09/2011	09/09/2011	09/09/2011	09/09/2011	09/09/2011	09/09/2011	9/28/2011	09/07/2011	09/07/2011	09/12/2011	09/12/2011	09/09/2011
PCBs (µg/kg)																			
SW8082																			
Aroclor 1016	--	--	18 U	19 U	18 U	20 U	39 U	20 U	19 U	19 UJ	19 U	19 U	20 U	19 U	19 U	19 U	19 U	19 U	20 U
Aroclor 1242	--	--	18 U	19 U	18 U	20 U	39 U	20 U	19 U	19 UJ	19 U	19 U	20 U	19 U	19 U	19 U	19 U	19 U	20 U
Aroclor 1248	--	--	**49**	56 U	230 U	250 U	**82**	**38** J	**50**	**28** J	19 U	19 U	**50**	**42**	170 U	75 U	19 U	**23**	**22**
Aroclor 1254	--	--	**120**	**150**	**600**	**720**	**170**	**89** J	**120**	**100** J	**44**	**43**	**170**	**90**	**480**	**180**	**12** J	**42**	**49**
Aroclor 1260	--	--	**140** J	**140** P	**190**	**210**	**120**	**65** J	**120** J	**49** J	**64** J	**55** J	**68** J	**74**	**410**	**91**	**14** J	**42**	**69** J
Aroclor 1221	--	--	18 U	19 U	18 U	20 U	39 U	20 U	19 U	19 UJ	19 U	19 U	20 U	19 U	19 U	19 U	19 U	19 U	20 U
Aroclor 1232	--	--	18 U	19 U	18 U	20 U	39 U	20 U	19 U	19 UJ	19 U	19 U	20 U	19 U	19 U	19 U	19 U	19 U	20 U
Total PCBs (d)	130	1000	**309** J	**290** P	**790**	**930**	**372**	**192** J	**290** J	**177** J	**108** J	**98** J	**288** J	**206**	**890**	**271**	**26** J	**107**	**140** J
CONVENTIONALS	--	--																	
Total Organic Carbon (%)			**11.6**	**6.40**	**9.03**	**13.0**	**13.6**	**11.1**	**11.2**	**11.5**	**12.2**	**9.64**	**4.25**	**13.4**	**10.9**	**12.3**	**3.53**	**5.03**	**12.2**

TABLE 1
2011 STORM DRAIN SOLIDS SCREENING LEVEL COMPARISON
ISAACSON THOMPSON

	IT-CB39/86/85 TL74A 09/09/2011	IT-CB60/61 TL29G 09/07/2011	IT-CB63 TL29F 09/07/2011	IT-CB66/67 TL29I 09/07/2011	IT-CB81/82 TL53B 09/08/2011	IT-CB83 TL53D 09/08/2011	IT-CB90/91 TL53C 09/08/2011	IT-CB90B TL53J 09/08/2011	IT-CBA TL29A 09/07/2011	IT-CBB/62/68 TL29H 09/07/2011	IT-CBC TL53G 09/08/2011	IT-CBD TL53H 09/08/2011	IT-CBE/77/77B TL53I 09/08/2011	IT-CG72 TL53A 09/08/2011	IT-CG74 TL29D 09/07/2011	IT-OWS23 TL53L 09/08/2011	IT-OWS79 TL53E 09/08/2011	IT-VTVE TL84C 09/12/2011	IT-VTVW TL29E 09/07/2011
TOTAL METALS (mg/kg)																			
EPA200.8/SW7471A																			
Arsenic	13.1	7.0	12.9	14.3	6.5	18.8	4.6	8.3	14.3	6.5	12.5	12.3	8.2	6.8	9.6	18.4	20.0	38.8	38.3
Cadmium	13.0	3.0	5.7	11.7	6.6	14.7	4.8	1.3	17.1	7.2	117	154 J	39.5	14.8	18.4	7.2	38.8	2.4	23.7
Chromium	128 J	107	165	128	61.2	152	37.7	77.9	90.5	100	170	158 J	72.9	134	198	284	200	290	821
Copper	110	156	207	242	74.4	233	99.0	80.1	117	76.9	224	190	84.4	208	218	312	315	245	205
Lead	168 J	261	393	299	51.3	175	31.1	125	119	370	308	245	96.4	292	377	268	296	378	182
Mercury	0.09	0.08	0.24	1.16	0.05	0.17	0.03	0.07	0.08	0.04	0.13	0.27 J	0.17	0.15	0.20	0.22	0.35	0.19	0.16
Silver	0.5	0.8	1.3	2.9	0.3 U	0.7	0.2 U	0.3 U	0.4	0.3	1.5	1.9	0.3	0.7	0.8	0.6	1.4	0.6	0.6
Zinc	1050	1680	1240	2400	359	1460	265	2060	1370	960	2240	2090	860	1400	1650	3390	3490	990	830
PAHs (µg/kg-dry wt)																			
SW8270DSIM																			
Naphthalene	230	67	92	170	34	62	19 J	89 J	51	49	100	190 J	57	110	270	220	300	180	140
Acenaphthylene	140 U	20 J	26 J	37	11 J	22 J	29 U	140 U	21 J	28 U	31 J	180 J	110	64 U	50 J	200 U	44 J	94	40 J
Acenaphthene	85 J	50	75	94	16	58	25 J	78 J	52	52	74	180	280	130	280	140 J	480	220	110
Fluorene	130 J	65	120	110	31	40	43	92 J	80	46	120	230 J	290	190	370	190 J	560	150	140
Phenanthrene	1600	680	1300	1500	320	570	280	570	590	540	960	830	3200	1400	2500	1400	3600	1400	780
Anthracene	140 U	86	110	150	28	72	36	140 U	76	67	94	220 J	360	170	410	160 J	670	120	83
2-Methylnaphthalene	81 J	38	64	120	33	43	17 J	90 J	43	33	88	180	40	78	120	130 J	200	230	160
LPAH (d,e)	2045	968	1723	2061	440	824	403	829	870	754	1379	1830	4297	2000	3880	2110	5654	2164	1293
Fluoranthene	1900	1200	2100	2700	440	870	410	920	790	1000	1600	1200	5800	2000	2800	2100	4500	2100	890
Pyrene	1400	880	1600	2300	320	610	320	700	570	810	1200	890	4400	1400	2100	1600	3500	1600	660
Benzo(a)anthracene	280	340	550	760	120	210	140	270	260	390	400	420	2200	560	890	590	1500	540	250
Chrysene	910	650	1100	1600	240	520	220	650	460	720	820	700	2500	980	1200	1500	1900	1400	670
Total Benzofluoranthenes (d, f)	940	920	1500	2600	310	590	270	730	580	760	1100	960	4200	1200	1600	1600	2600	1600	590
Benzo(a)pyrene	410	400	620	1100	130	240	120	280	260	390	390	420	2200	530	780	600	1200	660	260
Indeno(1,2,3-cd)pyrene	250	290	430	730	96	150	68	180	180	250	320	260 J	970	320	440	450	530	560	190
Dibenz(a,h)anthracene	140 J	80	140	190	36	39	23 J	110 J	56	71	110	160	260	78	160	130 J	170	140	58 J
Benzo(g,h,i)perylene	420	370	530	840	140	160	89	340	310	300	500	290	900	340	600	760	610	760	280
HPAH (d, g)	6650	5130	8570	12820	1832	3389	1660	4180	3466	4691	6440	5300	23430	7408	10570	9330	16510	9360	3848
SVOCs (µg/kg-dry wt)																			
SW8270D																			
1,2-Dichlorobenzene	180 U	290 U	300 U	58 U	290 U	290 U	78 U	500 U	56 U	170 U	290 U	240 U	170 U	130 U	300 U	500 U	360 U	240 U	410 U
1,4-Dichlorobenzene	180 U	290 U	300 U	58 U	290 U	290 U	78 U	500 U	56 U	170 U	290 U	240 U	170 U	130 U	300 U	500 U	360 U	240 U	410 U
1,2,4-Trichlorobenzene	180 U	290 U	300 U	58 U	290 U	290 U	78 U	500 U	56 U	170 U	290 U	240 U	170 U	130 U	300 U	500 U	360 U	240 U	410 U
Hexachlorobenzene	180 U	290 U	300 U	58 U	290 U	290 U	78 U	500 U	56 U	170 U	290 U	240 U	170 U	130 U	300 U	500 U	360 U	240 U	410 U
Dimethylphthalate	150 J	610	300 U	520	290 U	320	39 J	500 U	260	170 U	460	240	170 U	170	300 U	500 U	320 J	240 U	410 U
Diethylphthalate	460 U	720 U	740 U	140 U	730 U	720 U	200 U	1300 U	140 U	420 U	740 U	590 U	420 U	340 U	760 U	1200 U	890 U	590 U	1000 U
Di-n-Butylphthalate	290	1300	280 J	740	15000	200 J	320	500 U	1100	180	1000	500 J	190	500	460	350 J	600	240 U	430
Butylbenzylphthalate	670	7900	270 J	340	1500	950	390	330 J	980	160 J	4000	1400 J	530	400	350	900	1400	370 J	370 J
bis(2-Ethylhexyl)phthalate	4500	16000	6600	9000	1800	4500	4000	3800	12000	2800	23000	22000 J	4600	10000	4100	15000	22000	3300	4400
Di-n-Octyl phthalate	100 J	2900	330	2300	570	290 U	280	500 U	190	900	3800 J	2100	180	320	1000	2000	1800	130 J	410 U
Dibenzofuran	830	290 U	300 U	78	290 U	290 U	78 U	500 U	28 J	170 U	290 U	240 U	170 U	120 J	300 U	500 U	230 J	240 U	410 U
Hexachlorobutadiene	920 U	1400 U	1500 U	290 U	1500 U	1400 U	390 U	2500 U	280 U	840 U	1500 U	1200 U	840 U	670 U	1500 U	2500 U	1800 U	1200 U	2000 U
N-Nitrosodiphenylamine	180 U	290 U	300 U	37 J	290 U	290 U	78 U	500 U	56 U	170 U	290 U	240 U	170 U	130 U	300 U	500 U	360 U	240 U	410 U
SVOCs (µg/kg-dry wt)																			
SW8270D																			
Phenol	200	290 U	280 J	470	290 U	160 J	82	250 J	150	110 J	440	220 J	100 J	270	210 J	500	460	260	390 J
2-Methylphenol	180 U	290 U	300 U	58 U	290 U	290 U	78 U	500 U	56 U	170 U	290 U	240 U	170 U	130 U	300 U	500 U	360 U	240 U	410 U
4-Methylphenol	540	200 J	330 J	220	580 U	580 U	82 J	3100	110	330 U	190 J	220 J	110 J	200 J	180 J	11000	510 J	590	370 J
2,4-Dimethylphenol	370 U	580 U	590 U	120 U	580 U	580 U	160 U	1000 U	110 U	330 U	590 U	470 U	330 U	270 U	610 U	1000 U	710 U	480 U	820 U
Pentachlorophenol	1800 U	2900 U	3000 U	580 U	2900 U	1600 J	780 U	5000 U	560 U	1700 U	2900 U	2400 U	1700 U	1300 U	3000 U	5000 U	3600 U	2400 U	4100 U
Benzyl Alcohol	180 U	6500	1000	790	290 U	290 U	78 U	500 U	210	280	2500	3500	1900	390	860	7200	6500	210 J	410 U
Benzoic Acid	1400 J	5800 UJ	5900 UJ	1200 UJ	5800 UJ	5800 UJ	1600 UJ	10000 UJ	330 J	3300 UJ	5900 UJ	4700 UJ	3300 UJ	2700 UJ	6100 UJ	10000 UJ	7100 UJ	1200 J	8200 UJ

TABLE 1
2011 STORM DRAIN SOLIDS SCREENING LEVEL COMPARISON
ISAACSON THOMPSON

	IT-CB39/86/85 TL74A 09/09/2011	IT-CB60/61 TL29G 09/07/2011	IT-CB63 TL29F 09/07/2011	IT-CB66/67 TL29I 09/07/2011	IT-CB81/82 TL53B 09/08/2011	IT-CB83 TL53D 09/08/2011	IT-CB90/91 TL53C 09/08/2011	IT-CB90B TL53J 09/08/2011	IT-CBA TL29A 09/07/2011	IT-CBB/62/68 TL29H 09/07/2011	IT-CBC TL53G 09/08/2011	IT-CBD TL53H 09/08/2011	IT-CBE/77/77B TL53I 09/08/2011	IT-CG72 TL53A 09/08/2011	IT-CG74 TL29D 09/07/2011	IT-OWS23 TL53L 09/08/2011	IT-OWS79 TL53E 09/08/2011	IT-VTVE TL84C 09/12/2011	IT-VTVW TL29E 09/07/2011
PCBs (µg/kg)																			
SW8082																			
Aroclor 1016	92 U	20 U	20 U	19 U	19 U	14 U	20 U	19 U	20 U	19 U	20 U	20 U	19 U	19 U	19 U	39 U	19 U	39 U	19 U
Aroclor 1242	92 U	20 U	20 U	19 U	19 U	14 U	20 U	19 U	20 U	19 U	20 U	20 U	19 U	19 U	19 U	39 U	19 U	39 U	19 U
Aroclor 1248	92 U	20 U	36 U	**36**	19 U	56 U	20 U	**40**	58 U	**26**	53 U	40 U	19 U	91 U	140 U	**94**	75 U	190 U	81 U
Aroclor 1254	**190**	**39**	**77**	**77**	**52** J	**180** J	**45** J	**100**	**160**	**68**	**100** J	**170** J	**44**	**300** J	**280**	**210**	**180** J	**570**	**130**
Aroclor 1260	**180** J	**43**	**86**	**120**	**53**	**110**	**38**	**87**	**92**	**54**	**140**	**140** P	**44**	**330**	**99**	**160**	**180**	**200**	**100**
Aroclor 1221	92 U	20 U	20 U	19 U	19 U	14 U	20 U	19 U	20 U	19 U	20 U	20 U	19 U	19 U	19 U	39 U	19 U	39 U	19 U
Aroclor 1232	92 U	20 U	20 U	19 U	19 U	14 U	20 U	19 U	20 U	19 U	20 U	20 U	19 U	19 U	19 U	39 U	19 U	39 U	19 U
Total PCBs (d)	**370** J	**82**	**163**	**233**	**105** J	**290** J	**83** J	**227**	**252**	**148**	**240** J	**310** JP	**88**	**630** J	**379**	**464**	**360** J	**770**	**230**
CONVENTIONALS																			
Total Organic Carbon (%)	**16.3**	**9.26**	**13.0**	**21.6**	**8.95**	**11.3**	**5.48**	**12.5**	**7.91**	**5.95**	**20.9**	**11.4**	**6.45**	**16.3**	**16.4**	**21.5**	**14.1**	**12.0**	**10.5**

U = Indicates the compound was not detected at the reported concentration.
UJ = The analyte was not detected in the sample; the reported sample reporting limit is an estimate.
J = Indicates the analyte was positively identified; the associated numerical value is the approximate concentration of the analyte in the sample.
P = The analyte was detected on both chromatographic columns but the quantified values differ by 40% RPD with no obvious chromatographic interference. The higher of the two values is reported by the laboratory.
Bold = Detected compound.
Indicates concentration exceeds SQS but less than the CSL or the dry weight equivalent values [Lower Apparent Effect Threshold (LAET) and and 2LAET, respectively]
Indicates concentration exceeds the SQS and CSL or dry weight equivalent criteria.

(a) Dry weight equivalent criteria are based on the Puget Sound Apparent Effect Threshold Values (Barrick et al. 1988)
(b) SMS Sediment Quality Standard /Lower Apparent Effects Threshold
(c) SMS Cleanup Screening Level / Second Lower Apparent Effects Threshold
(d) Where chemical criteria in this table represent the sum of individual compounds or isomers, the following methods shall be applied:
  (i) Where chemical analyses identify an undetected value for every individual compound/isomer, then the single highest detection limit shall represent the sum of the respective compound/isomers.
  (ii) Where chemical analyses detect one or more individual compounds/isomers, only the detected concentrations will be added to represent the group sum.
(e) The LPAH criterion represents the sum of the following "low molecular weight polynuclear aromatic hydrocarbon" compounds: naphthalene, acenaphthylene, acenaphthene, fluorene, phenanthrene, and anthracene. The LPAH criterion is not the sum of the criteria values for the individual LPAH compounds listed.
(f) The total benzofluoranthenes criterion represents the sum of the concentrations of the "B," "J," and "K" isomers.
(g) The HPAH criterion represents the sum of the following "high molecular weight polynuclear aromatic hydrocarbon" compounds: fluoranthene, pyrene, benzo(a)anthracene, chrysene, total benzofluoranthenes, benzo(a)pyrene, indeno(1,2,3-c,d)pyrene, dibenz(a,h)anthracene, and benzo(g,h,i)perylene. The HPAH criterion is not the sum the criteria values for the individual HPAH compounds listed.

TABLE 2
SOURCE SAMPLE PLANNING
BOEING ISSACSON-THOMPSON SITE
TUKWILA, WASHINGTON

Sample Area	Sample Media	Number of Samples	Sample Locations	Planned Analyses	Comments
14-01 Bldg - SOUTH	Surface Debris	2	Vicinity of CG72 and CG74	PCBs, Cadmium, Zinc	Cadimium, zinc, and PCBs were present at concentrations above the SMS criteria in storm drain solids at CG72 and CG74.
14-01 Bldg - EAST	Catch Basin Solids	1	Composite of solids in CB66 and CB67	PCBs, PAHs, Cadmium, Mercury, Zinc.	Building 14-15 was formerly located in this area prior to 2010; potential sources of contaminants in storm drain solids in this area are likely gone and, therefore, resampling of the solids is proposed.
14-01 Bldg - NORTH	Surface Debris	3	In the vicinity of CB8, CB13/14, and CB17/20	PCBs, Zinc (plus Mercury in the vicinity of CB8)	PCBs and zinc were present at concentrations above the SMS criteria in storm drain solids at CB8, CB13/14, and CB17/20, and mercury was present at CB8.
14-01 Bldg - WEST	Catch Basin Solids	1	Composite of solids in CB77/CB77B and CB77E; if no solids are present a surface debris sample will be collected.	PCBs, PAHs, Zinc, Cadmium	Loading dock formerly located in this area and was removed in August 2011; some old concrete panels replaced. These upgrades may have reduced or eliminated potential sources of PAHs, cadmium, and zinc in this area; therefore, resampling of the solids is proposed.
	Catch Basin Solids	1	Composite of solids in CBC and CBD; if no solids are present a surface debris sample will be collected.	PCBs, Cadmium, Zinc	Loading dock formerly located in this area and was removed in August 2011; some old concrete panels replaced. These upgrades may have reduced or eliminated potential sources of PAHs, cadmium, and zinc in this area, therefore, resampling of the solids is proposed.
14-13 Bldg	Paint Chips	1	Where paint is flaking off/in poor condition on the exterior wall of Building 14-13	Zinc, Cadmium	Zinc and cadmium were present at concentrations above the SMS criteria in storm drain solids in this area.
	Surface Debris	1	Where surface debris is present on the western side of Building 14-13	PCBs, Zinc, Cadmium	PCBs, zinc, and cadmium were present at concentrations above the SMS criteria in storm drain solids in this area.
14-02/14-03 Bldg - SOUTH	Surface Debris	1 - 2	Where surface debris is present on the south side of the building	PCBs, Zinc, Cadmium, Mercury	PCBs, zinc, and cadmium were present at concentrations above the SMS criteria in catch basin solids located south of the building and mercury at CB28.
	Paint Chips	1	Where paint is flaking off/in poor condition on the exterior south wall of the building	Zinc, Cadmium, Mercury	Zinc and cadmium were present at concentrations above the SMS criteria in catch basin solids located south of the building and mercury was present at CB28.
14-02/14-03 Bldg - EAST	Surface Debris	1 - 2	Where surface debris is present on the east side of the building	PCBs, Zinc, Cadmium	PCBs, zinc, and cadmium were present at concentrations above the SMS criteria in catch basin solids located east of the building.
	Paint Chips	1	Where paint is flaking off/in poor condition on the bollards/PIVs located on the east side of the 14-02 building	Zinc, Cadmium	Zinc and cadmium were present at concentrations above the SMS criteria in catch basin solids located east of the building.
14-02/14-03 Bldg - NORTH	Surface Debris	1 - 2	Where surface debris is available/present on the north side of the building	PCBs, PAHs, Arsenic, Cadmium, Chromium, Copper, Lead, Mercury, Zinc	PCBs, PAHs, arsenic, cadmium, chromium, copper, lead, mercury, and zinc were detected at concentrations above the SMS criteria in storm drain solids located north of the building.
	Paint Chips	1	Where paint is flaking off/in poor condition on the bollards/PIVs located on the north side of the 14-02/14-03 bldgs	Arsenic, Cadmium, Chromium, Copper, Lead, Mercury, and Zinc	Arsenic, cadmium, chromium, copper, lead, mercury, and zinc were detected at concentrations above the SMS criteria in storm drain solids north of the building.
	Paint Chips	1	Where paint is flaking off/in poor condition on the north exterior wall of 14-02/14-03 bldgs	Arsenic, Cadmium, Chromium, Copper, Lead, Mercury, and Zinc	Arsenic, cadmium, chromium, copper, lead, mercury, and zinc were detected at concentrations above the SMS criteria in storm drain solids north of the building.
14-02/14-03 Bldg - WEST	Surface Debris	1 - 2	Where surface debris is present on the west side of the building	PCBs, Zinc, Cadmium	PCBs, zinc, and cadmium were present at concentrations above the SMS criteria in storm drain solids west of the building.
	Paint Chips	1	Where paint is flaking off/in poor condition on the conex boxes stored on the west side of the 14-03 building	Zinc, Cadmium	Zinc and cadmium were present at concentrations above the SMS criteria in storm drain solids west of the building.
Isaacson East	Surface Debris	4 - 5	Where surface debris is available/present (2 samples along north fenceline, 2 samples along south fenceline, and 1 sample from concrete area if no caulk is present)	PCBs, Zinc, Chromium	PCBs, zinc, and cadmium were present at concentrations above the SMS criteria in storm drain solids in this area and chromium in solids at CB12 and the Vortech Vaults.
	Caulk	1	If present, collect caulk sample from concrete adjacent to CB11/CB12 and Vortechs Vault	PCBs	PCBs were present at concentrations above the SMS criteria in storm drain solids at CB11, CB12, and Vortechs vaults.
Isaacson West	Surface Debris	4 - 5	Where surface debris is present (2 samples along north fenceline, 2 samples along south fenceline, and 1 sample from concrete area if no caulk is present)	PCBs, Zinc, Cadmium, Chromium	PCBs, zinc, cadmium, and chromium were present at concentrations above the SMS criteria in storm drain solids in this area and chromium in solids at the Vortech Vaults.
	Caulk	1	If present, collect caulk sample from concrete in this area	PCBs	PCBs were present at concentrations above the SMS criteria in storm drain solids at CB51 and the Vortechs Vault.

TABLE 3
CONCRETE JOINT MATERIAL SAMPLE ANALYTICAL RESULTS - MAY/JUNE 2011
BOEING ISAACSON-THOMPSON
TUKWILA, WASHINGTON

	AXP052411-001 SY22A 5/24/2011	IT-CJM-1-110606 SZ61A 6/6/2011	IT-CJM-2-110606 SZ61B 6/6/2011	IT-CJM-3-110606 SZ61C 6/6/2011	IT-CJM-4-110606 SZ61D 6/6/2011	IT-CJM-5-110606 SZ61E 6/6/2011	IT-CJM-6-110606 SZ61F 6/6/2011
PCBs (mg/kg) **Method SW8082**							
Aroclor 1016	0.79 U	0.79 U	0.76 U	0.75 U	0.73 U	0.77 U	0.78 U
Aroclor 1242	0.79 U	0.79 U	0.76 U	0.75 U	0.73 U	0.77 U	0.78 U
Aroclor 1248	0.79 U	**1.1**	**0.88**	**1.1**	0.73 U	**0.82**	**1.4**
Aroclor 1254	0.79 U	**1.6**	**1.6**	**1.8**	0.73 U	**1.1**	**2.3**
Aroclor 1260	0.79 U	0.79 U	**1.4**	**0.97**	0.73 U	0.77 U	**2.9**
Aroclor 1221	0.79 U	0.79 U	0.76 U	0.75 U	0.73 U	0.77 U	0.78 U
Aroclor 1232	0.79 U	0.79 U	0.76 U	0.75 U	0.73 U	0.77 U	0.78 U
Total PCBs	0.79 U	**2.7**	**3.88**	**3.87**	0.73 U	**1.92**	**6.6**

U = Indicates the compound was not detected at the reported concentration.
Bold = Detected compound.

APPENDIX E

RI Sediment Sampling Field Forms

Mudmole™ Bore Log

Project: Boeing IT
Station: SD-501R1
Project No: LY12160140
Position: NAD83 WA N
Collected by: GSM
195119 Northing
Date: 1/30/2012 **Time:** 14:38
1275945 Easting
Water depth: 16.1 ft **Mudline:** -12.5 ft MLLW (estimated using tide tables)

Place Field ID Label Here

Weather/Comments: N/A

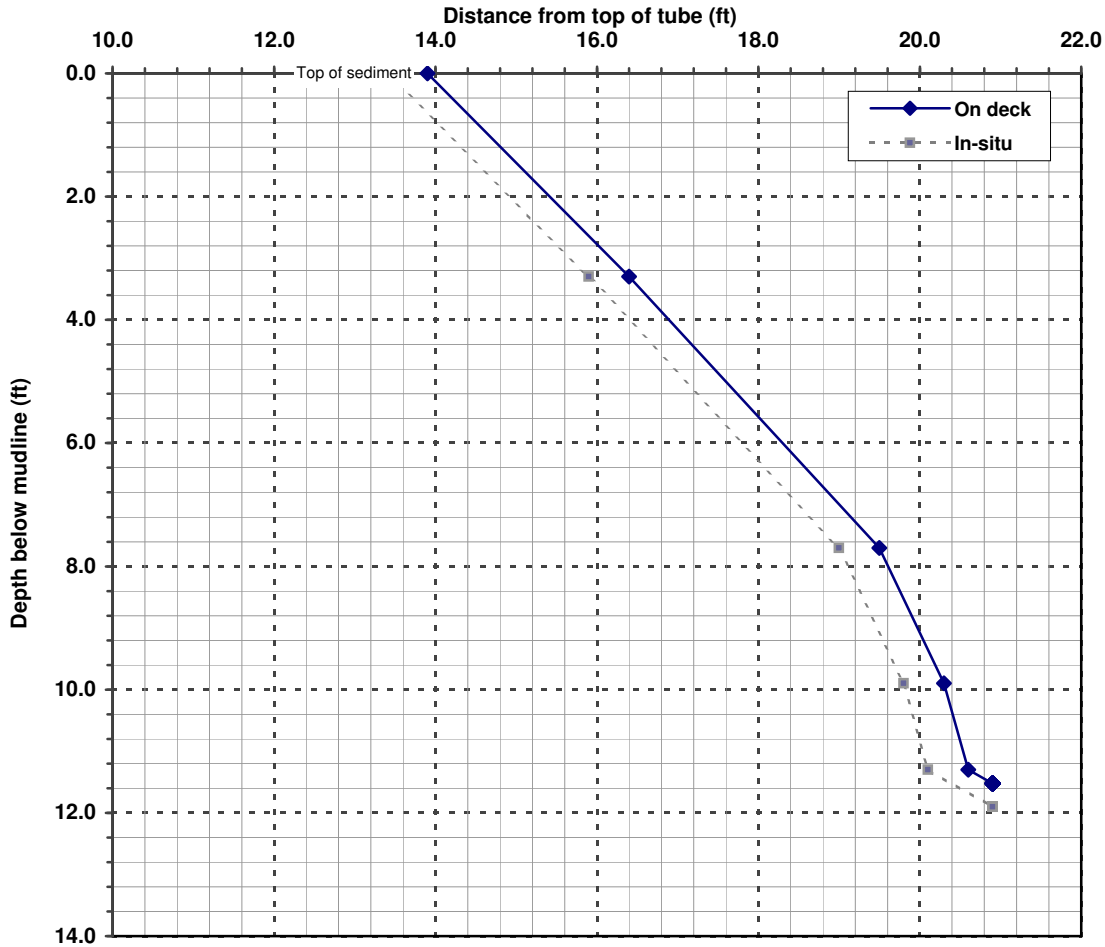

Penetration 11.9 ft/ On deck recovery 7 ft = 59% Recovery

Penetration interval (ft)	Interval recovery (ft)	Percent recovery
0-3.3	2.5	76%
3.3-7.7	3.1	70%
7.7-9.9	0.8	36%
9.9-11.3	0.3	21%
11.3-11.9	0.8	133%

Depth below mudline (ft)	Distance from top of tube (ft)
Mudline	13.9
1	14.66
2	15.42
3	16.17
4	16.89
5	17.60
6	18.30
7	19.01
8	19.61
9	19.97
10	20.32
11	20.54
12	No sample
13	No sample
14	No sample
15	No sample
16	No sample
17	No sample
18	No sample
19	No sample
20	No sample

AMEC E&I
3500 188th Street SW, Suite 601
Lynnwood, WA 98037
(425) 921-4000
fax (425) 921-4040

Mudmole™ Core Summary Log

Project: Boeing IT
Project No: LY12160140

Station: **SD-501R1**

Maximum depth of retained sediment: 9.4 ft
Mudline elevation: -12.5 **ft MLLW**
Percent recovery (on-deck): 59%

	Core collection	Laboratory processing
Date:	1/30/2012	1/31/2012
Time:	14:38	9:49

Field Log: Toni Olson
Summary Log: Nik Bacher

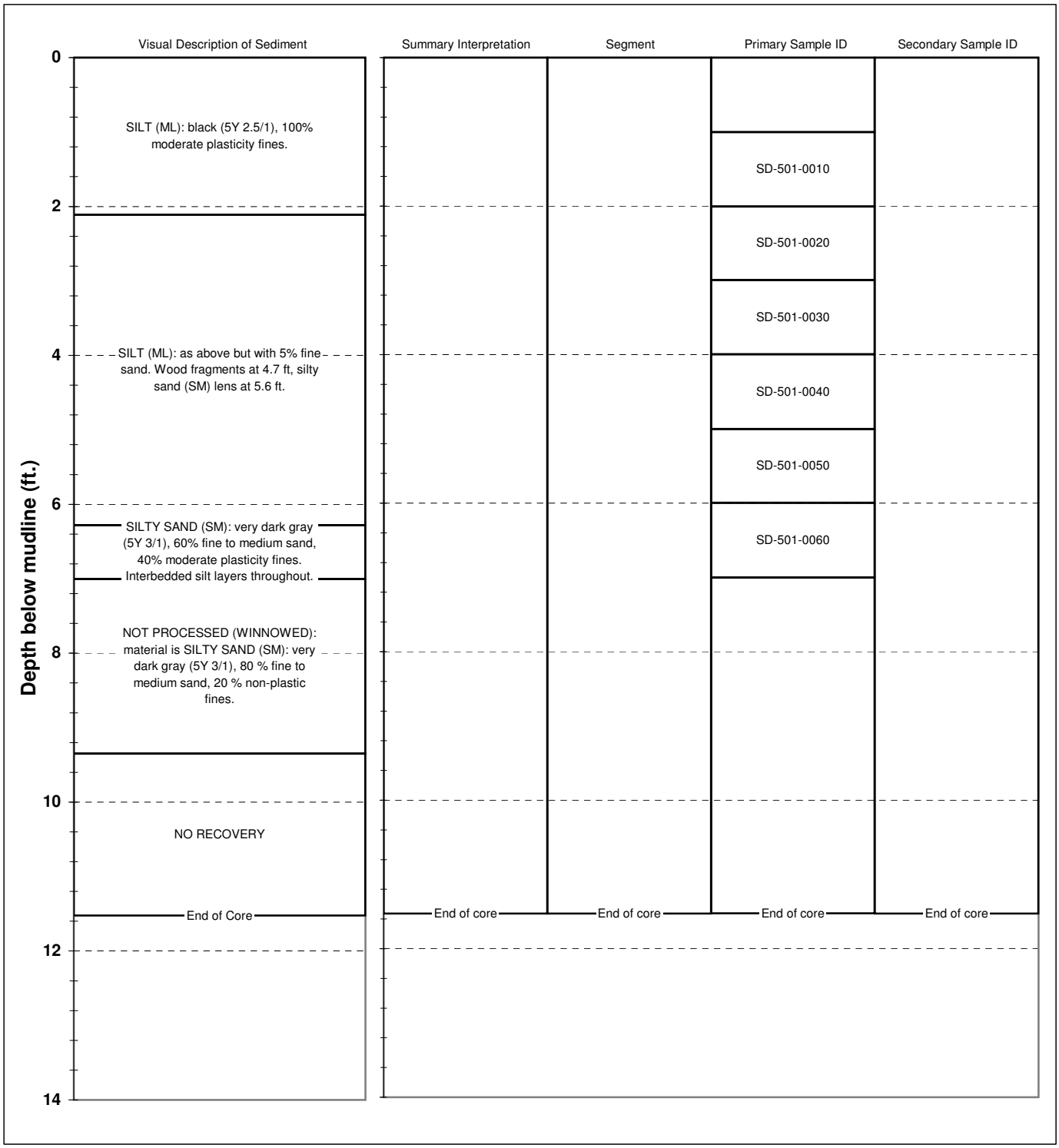

AMEC E&I
3500 188th Street SW, Suite 601
Lynnwood, WA 98037
(425) 921-4000
fax (425) 921-4040

Mudmole™ Bore Log

Project: Boeing IT
Station: SD-501R2
Project No: LY12160140
Position: NAD83 WA N
Collected by: GSM
195119 Northing
Date: 2/17/2012 **Time:** 9:43
1275946 Easting
Water depth: 19.6 ft **Mudline:** -11.4 ft MLLW (estimated using tide tables)

Place Field ID Label Here

Weather/Comments: N/A

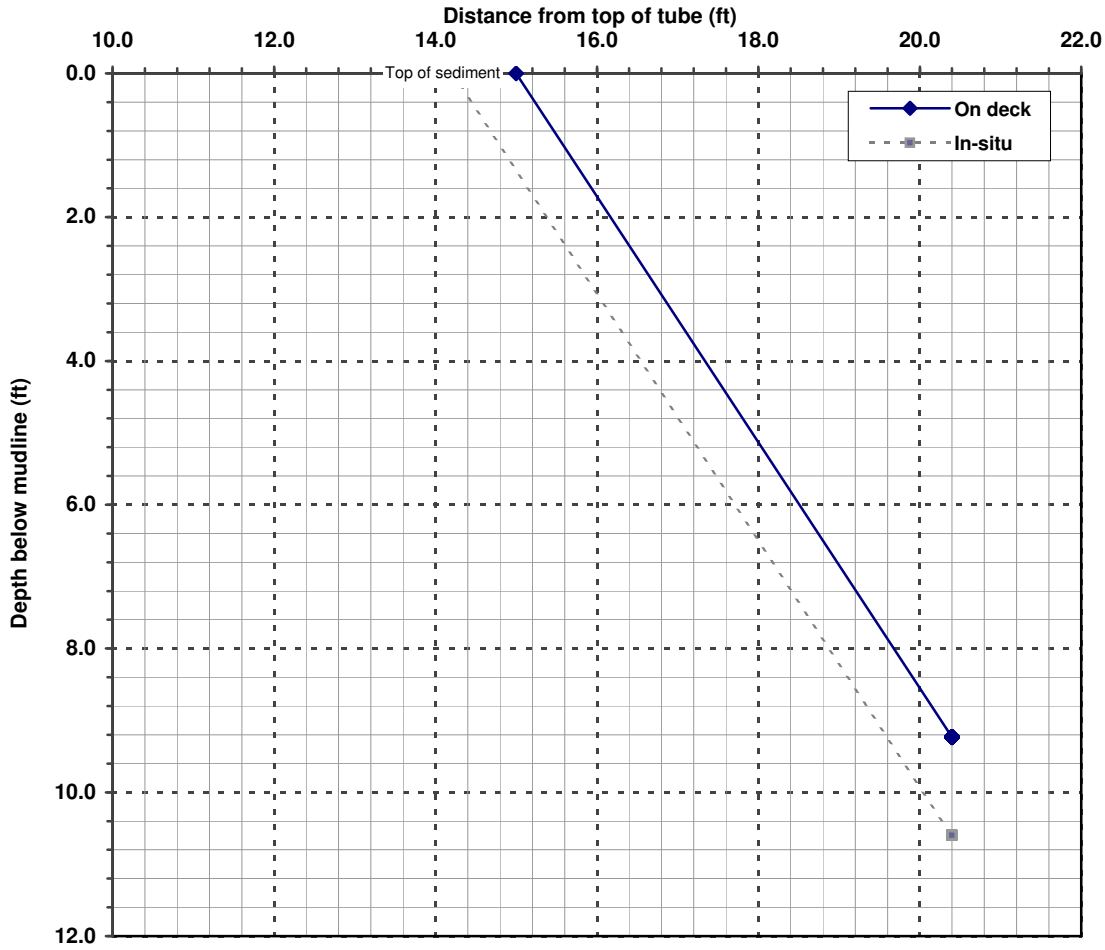

Penetration 10.6 ft/ On deck recovery 5.4 ft = 51% Recovery

Penetration interval (ft)	Interval recovery (ft)	Percent recovery
0-10.6	6.2	58%

Depth below mudline (ft)	Distance from top of tube (ft)
Mudline	15
1	15.58
2	16.17
3	16.75
4	17.34
5	17.92
6	18.51
7	19.09
8	19.68
9	20.26
10	No sample
11	No sample
12	No sample
13	No sample
14	No sample
15	No sample
16	No sample
17	No sample
18	No sample
19	No sample
20	No sample

AMEC E&I
3500 188th Street SW, Suite 601
Lynnwood, WA 98037
(425) 921-4000
fax (425) 921-4040

Mudmole™ Core Summary Log

Project: Boeing IT
Project No: LY12160140

Station: **SD-501R2**

Maximum depth of retained sediment: 8.9 ft
Mudline elevation: -11.4 **ft MLLW**
Percent recovery (on-deck): 51%

	Core collection	Laboratory processing
Date:	2/17/2012	2/17/2012
Time:	9:43	12:00

Field Log: Devin O'Reilly
Summary Log: Nik Bacher

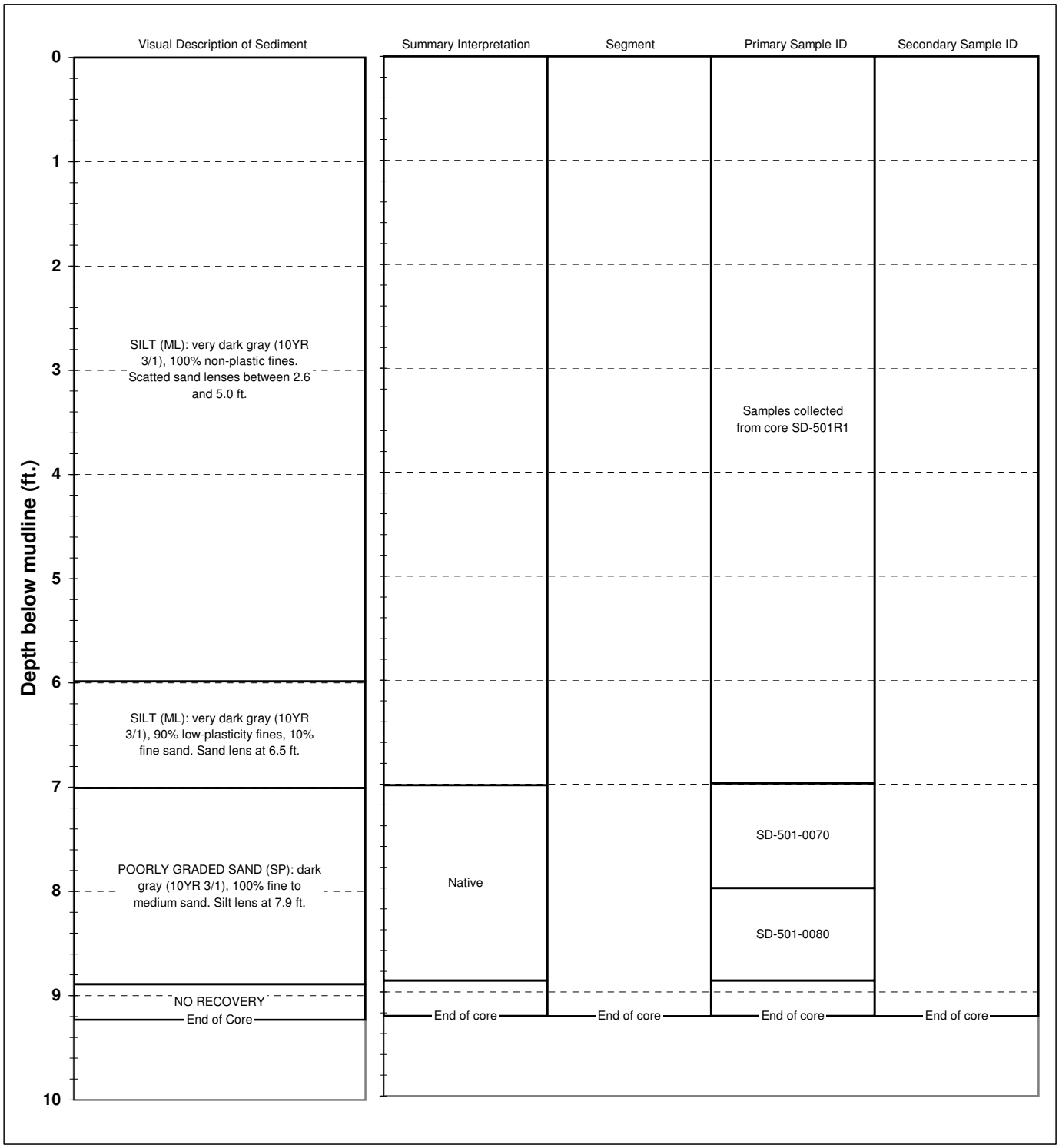

AMEC E&I
3500 188th Street SW, Suite 601
Lynnwood, WA 98037
(425) 921-4000
fax (425) 921-4040

Mudmole™ Bore Log

Project: Boeing IT
Station: SD-502
Project No: LY12160140
Position: NAD83 WA N
Collected by: GSM
195068 Northing
Date: 1/30/2012 **Time:** 10:16
1276000 Easting
Water depth: 14.1 ft **Mudline:** -3.5 ft MLLW (estimated using tide tables)

Place Field ID Label Here

Weather/Comments: N/A

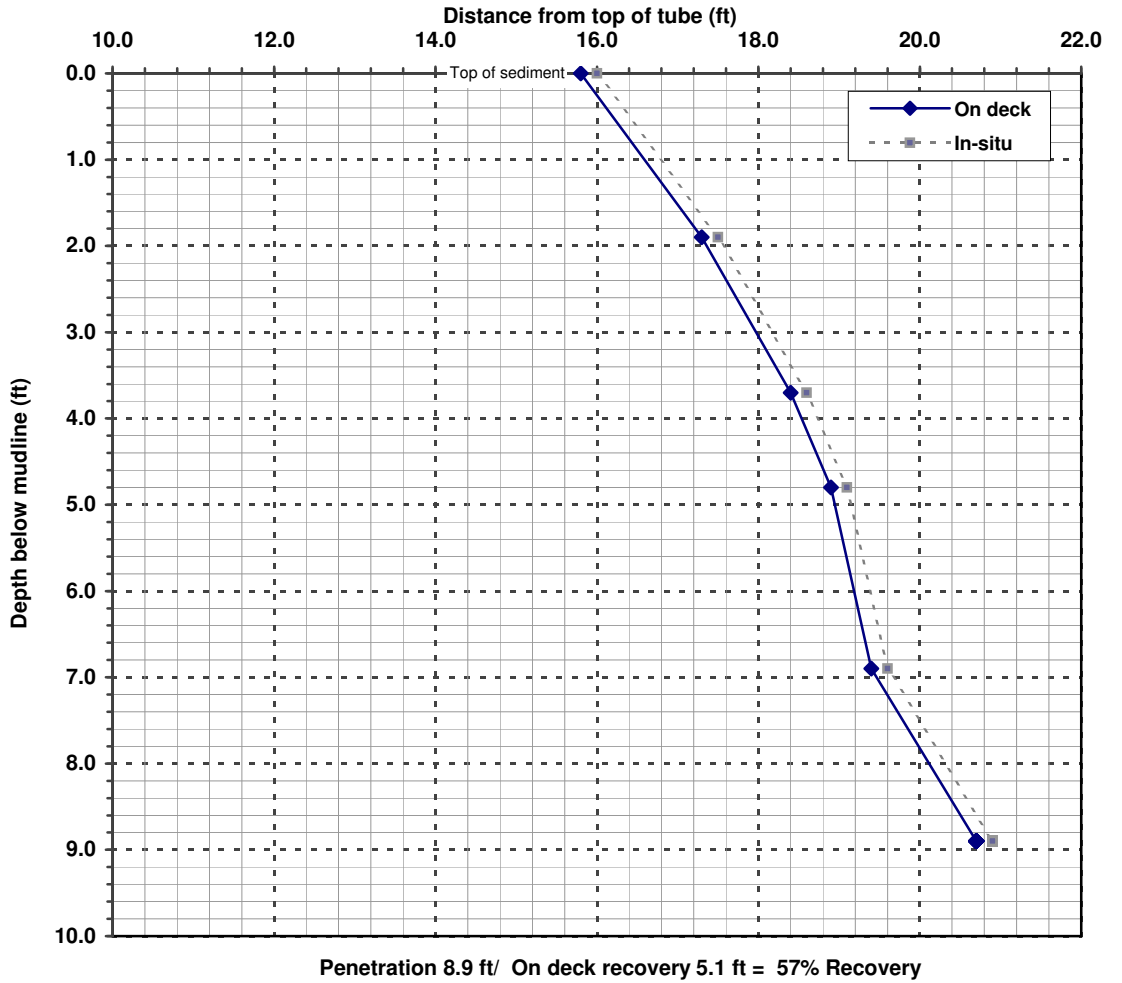

Penetration 8.9 ft/ On deck recovery 5.1 ft = 57% Recovery

Penetration interval (ft)	Interval recovery (ft)	Percent recovery
0-1.9	1.5	79%
1.9-3.7	1.1	61%
3.7-4.8	0.5	45%
4.8-6.9	0.5	24%
6.9-8.9	1.3	65%

Depth below mudline (ft)	Distance from top of tube (ft)
Mudline	15.8
1	16.59
2	17.36
3	17.97
4	18.54
5	18.95
6	19.19
7	19.47
8	20.12
9	No sample
10	No sample
11	No sample
12	No sample
13	No sample
14	No sample
15	No sample
16	No sample
17	No sample
18	No sample
19	No sample
20	No sample

AMEC E&I
3500 188th Street SW, Suite 601
Lynnwood, WA 98037
(425) 921-4000
fax (425) 921-4040

Mudmole™ Core Summary Log

Project: Boeing IT
Project No: LY12160140

Station: SD-502

Maximum depth of retained sediment: 7.0 ft
Mudline elevation: -3.5 **ft MLLW**
Percent recovery (on-deck): 57%

	Core collection	Laboratory processing
Date:	1/30/2012	1/30/2012
Time:	10:16	10:16

Field Log: Toni Olson
Summary Log: Nik Bacher

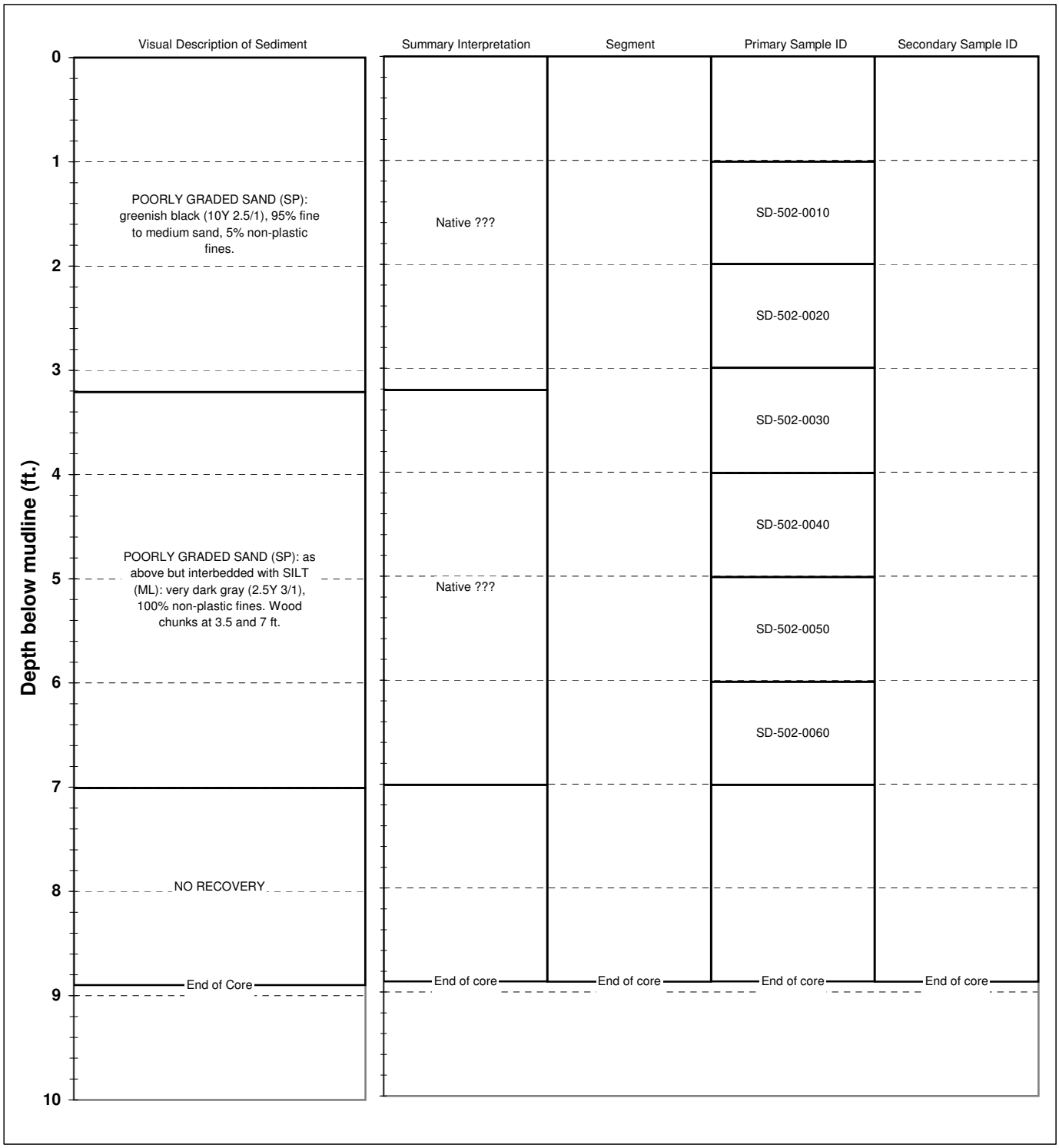

AMEC E&I
3500 188th Street SW, Suite 601
Lynnwood, WA 98037
(425) 921-4000
fax (425) 921-4040

Mudmole™ Bore Log

Project:	Boeing IT	**Station:**	SD-503
Project No:	LY12160140	**Position:**	NAD83 WA N
Collected by:	GSM		194996 Northing
Date:	2/1/2012 **Time:** 9:01		1275978 Easting
Water depth:	21.6 ft **Mudline:** -12.5 ft MLLW		(estimated using tide tables)

Place Field ID Label Here

Weather/Comments: N/A

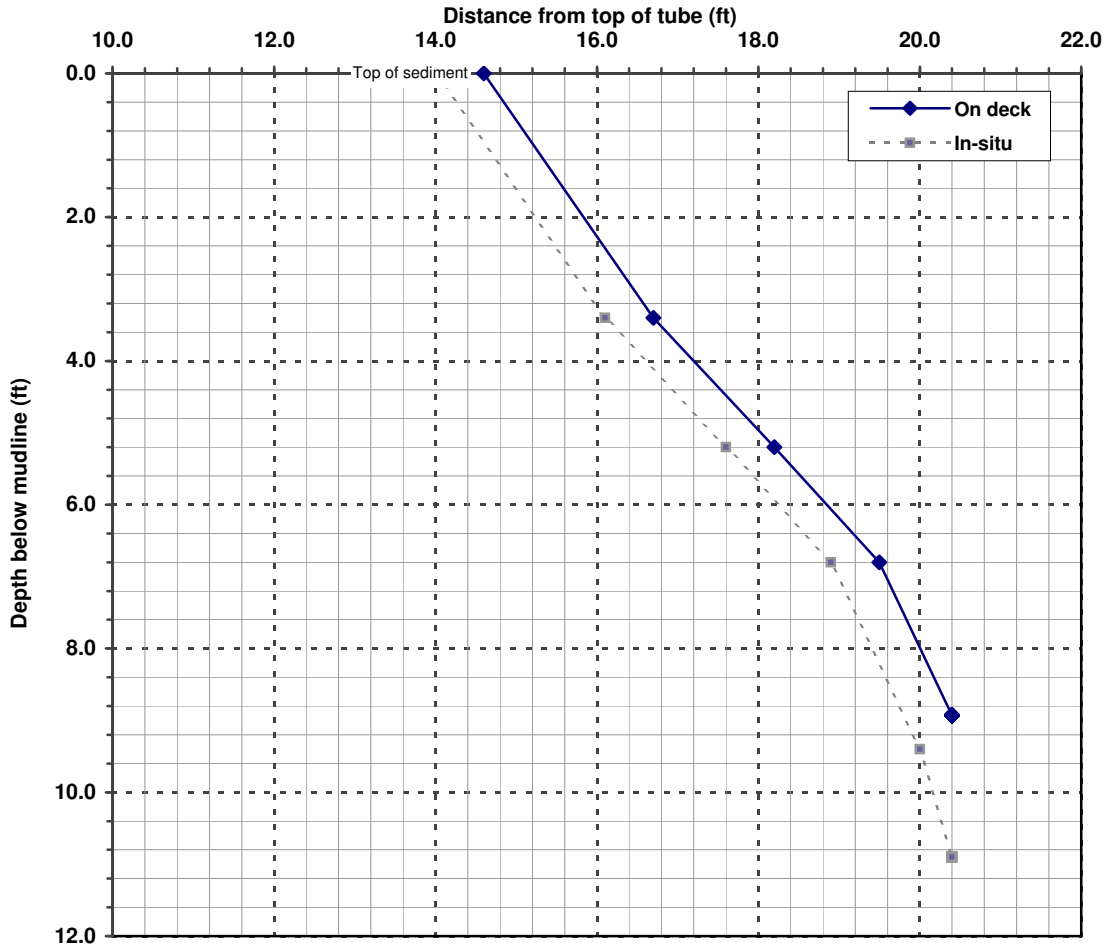

Penetration 10.9 ft/ On deck recovery 5.8 ft = 53% Recovery

Penetration interval (ft)	Interval recovery (ft)	Percent recovery
0-3.4	2.1	62%
3.4-5.2	1.5	83%
5.2-6.8	1.3	81%
6.8-9.4	1.1	42%
9.4-10.9	0.4	27%

Depth below mudline (ft)	Distance from top of tube (ft)
Mudline	14.6
1	15.22
2	15.84
3	16.45
4	17.20
5	18.03
6	18.85
7	19.58
8	20.01
9	No sample
10	No sample
11	No sample
12	No sample
13	No sample
14	No sample
15	No sample
16	No sample
17	No sample
18	No sample
19	No sample
20	No sample

AMEC E&I
3500 188th Street SW, Suite 601
Lynnwood, WA 98037

(425) 921-4000
fax (425) 921-4040

Mudmole™ Core Summary Log

Project: Boeing IT
Project No: LY12160140

Station: **SD-503**

Maximum depth of retained sediment: 8.0 ft
Percent recovery (on-deck): 53%

Mudline elevation: -12.5 **ft MLLW**

	Core collection	Laboratory processing
Date:	2/1/2012	2/1/2012
Time:	9:01	14:30

Field Log: Toni Olson
Summary Log: Nik Bacher

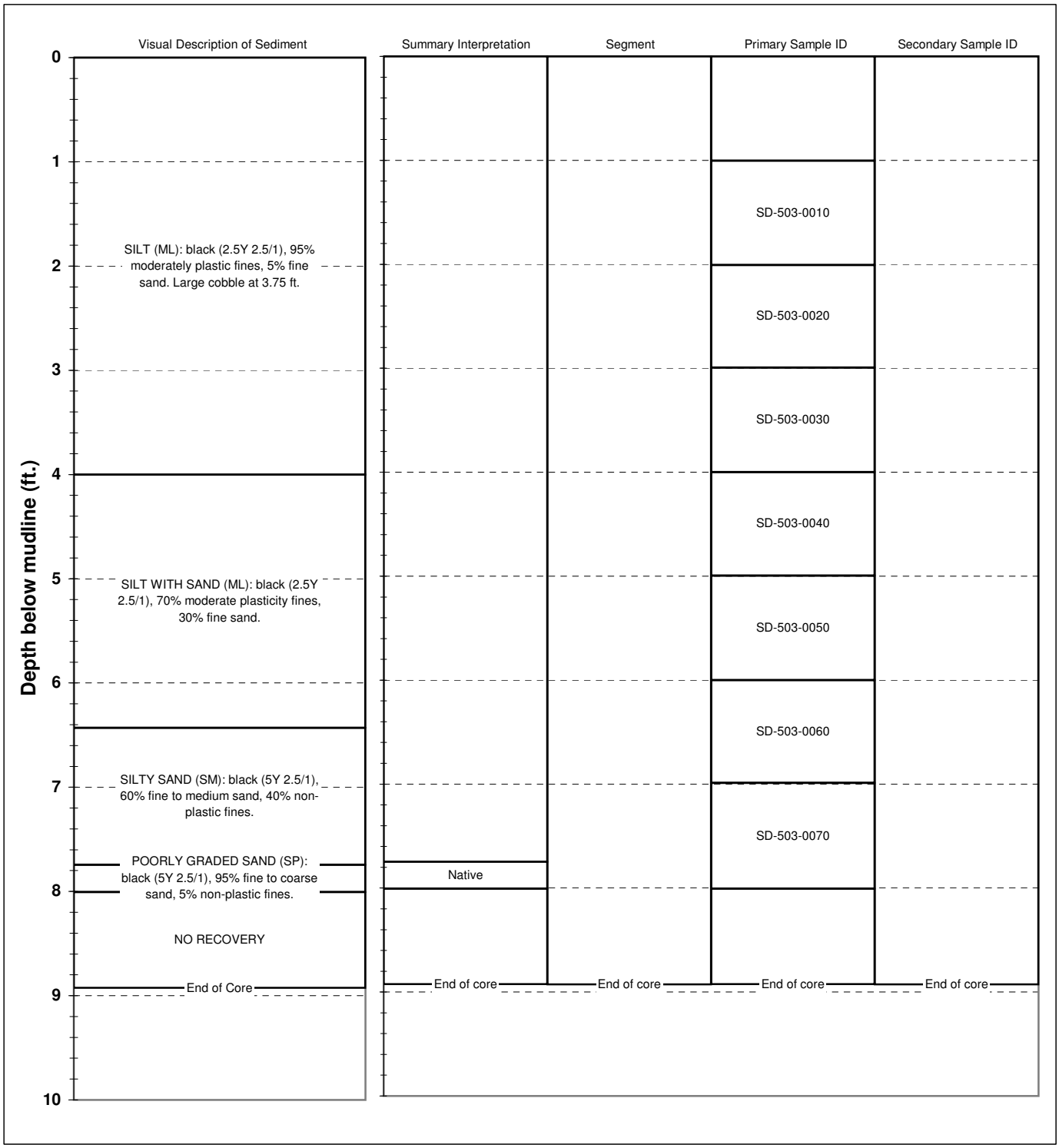

AMEC E&I
3500 188th Street SW, Suite 601
Lynnwood, WA 98037
(425) 921-4000
fax (425) 921-4040

Mudmole™ Bore Log

Project:	Boeing IT	**Station:**	SD-504
Project No:	LY12160140	**Position:**	NAD83 WA N
Collected by:	GSM		194940 Northing
Date:	1/30/2012 **Time:** 13:06		1276026 Easting
Water depth:	11.0 ft **Mudline:** -4.7 ft MLLW		(estimated using tide tables)

Place Field ID Label Here

Weather/Comments: N/A

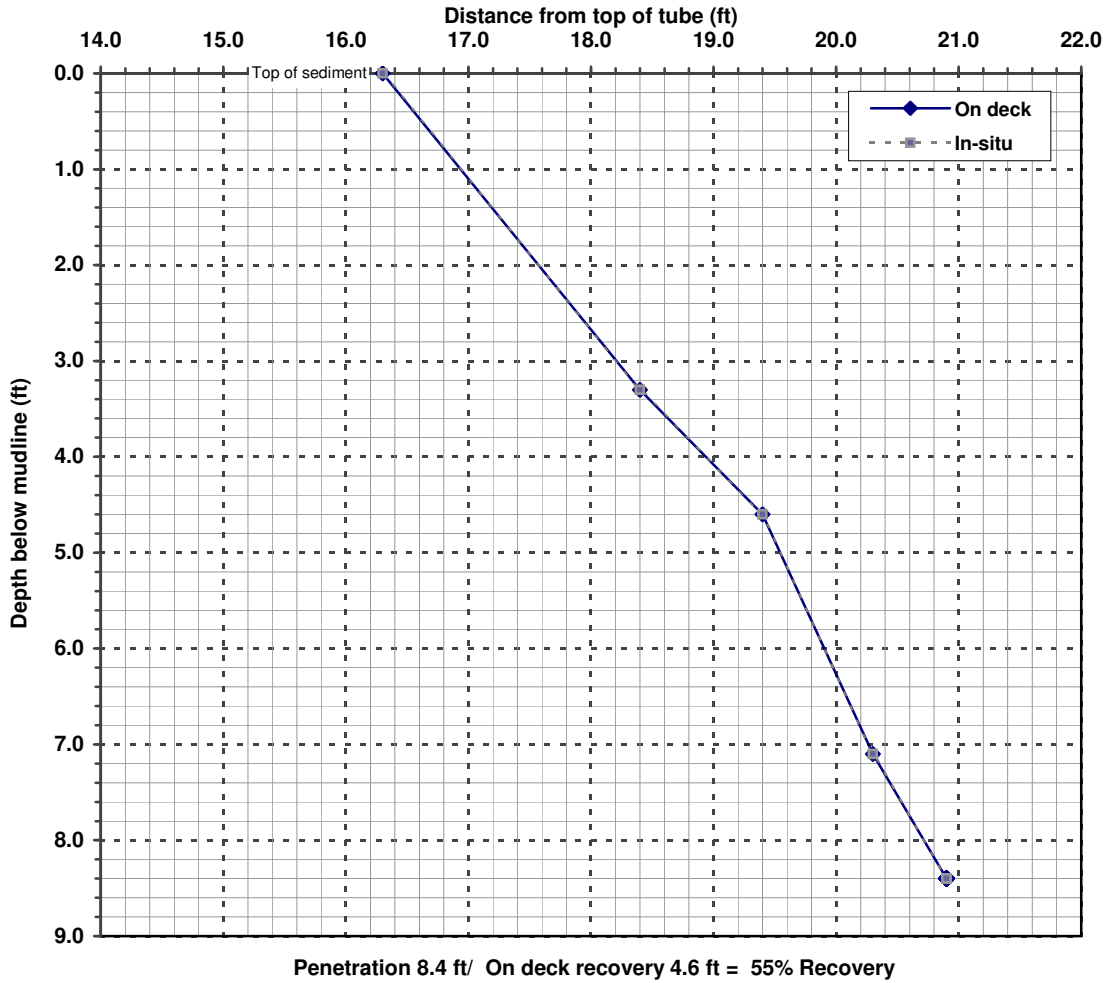

Penetration 8.4 ft/ On deck recovery 4.6 ft = 55% Recovery

Penetration interval (ft)	Interval recovery (ft)	Percent recovery
0-3.3	2.1	64%
3.3-4.6	1	77%
4.6-7.1	0.9	36%
7.1-8.4	0.6	46%

Depth below mudline (ft)	Distance from top of tube (ft)
Mudline	16.3
1	16.94
2	17.57
3	18.21
4	18.94
5	19.54
6	19.90
7	20.26
8	20.72
9	No sample
10	No sample
11	No sample
12	No sample
13	No sample
14	No sample
15	No sample
16	No sample
17	No sample
18	No sample
19	No sample
20	No sample

AMEC E&I
3500 188th Street SW, Suite 601
Lynnwood, WA 98037

(425) 921-4000
fax (425) 921-4040

Mudmole™ Core Summary Log

Project: Boeing IT
Project No: LY12160140

Station: **SD-504**

Maximum depth of retained sediment: 6.0 ft
Mudline elevation: -4.7 **ft MLLW**
Percent recovery (on-deck): 55%

	Core collection	Laboratory processing
Date:	1/30/2012	1/30/2012
Time:	13:06	13:06

Field Log: Toni Olson
Summary Log: Nik Bacher

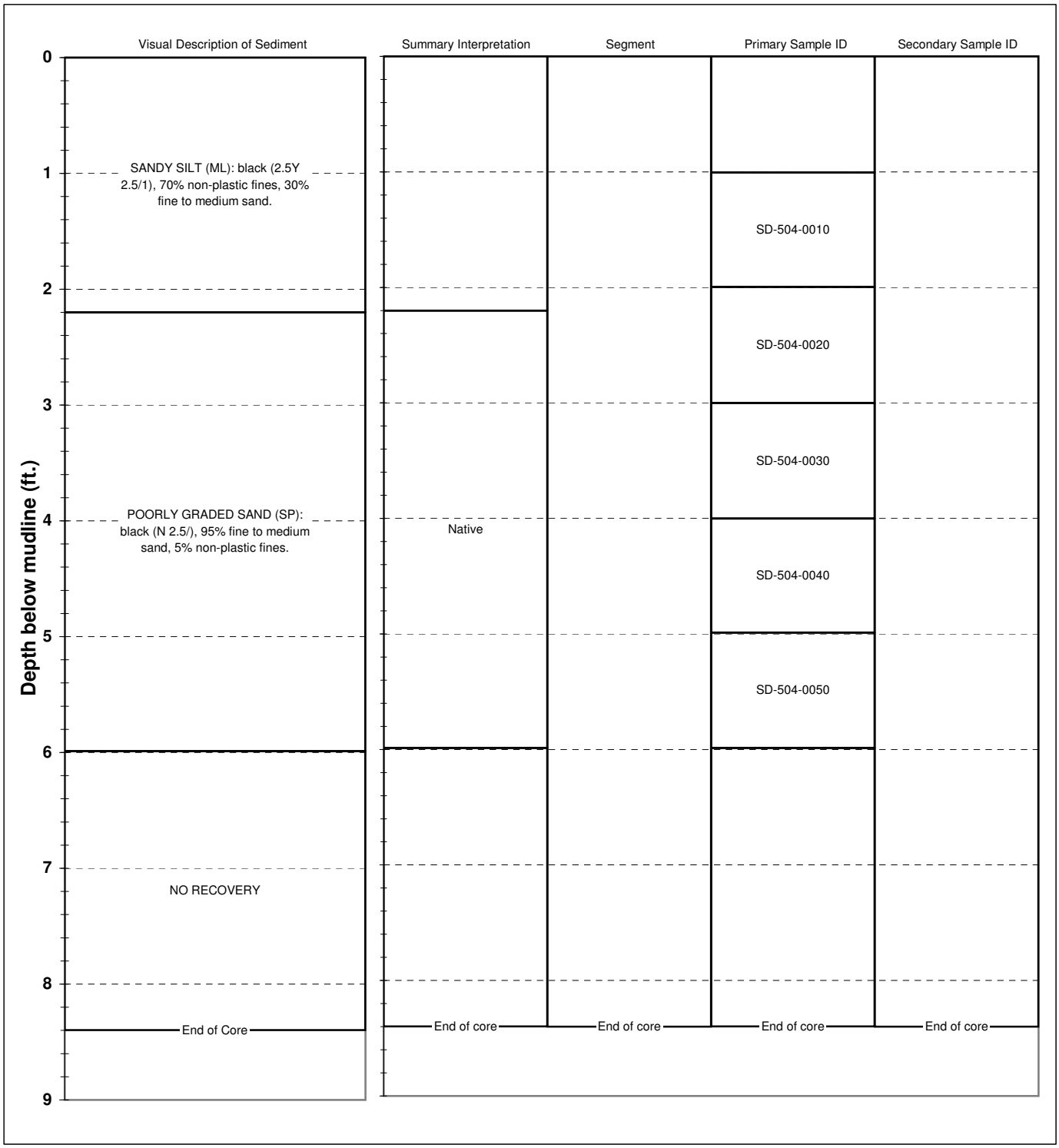

AMEC E&I
3500 188th Street SW, Suite 601
Lynnwood, WA 98037
(425) 921-4000
fax (425) 921-4040

Mudmole™ Bore Log

Project:	Boeing IT	**Station:**	SD-505
Project No:	LY12160140	**Position:**	NAD83 WA N
Collected by:	GSM		194879 Northing
Date:	2/2/2012 **Time:** 8:44		1276007 Easting
Water depth:	19.8 ft **Mudline:** -11.6 ft MLLW		(estimated using tide tables)

Place Field ID Label Here

Weather/Comments: N/A

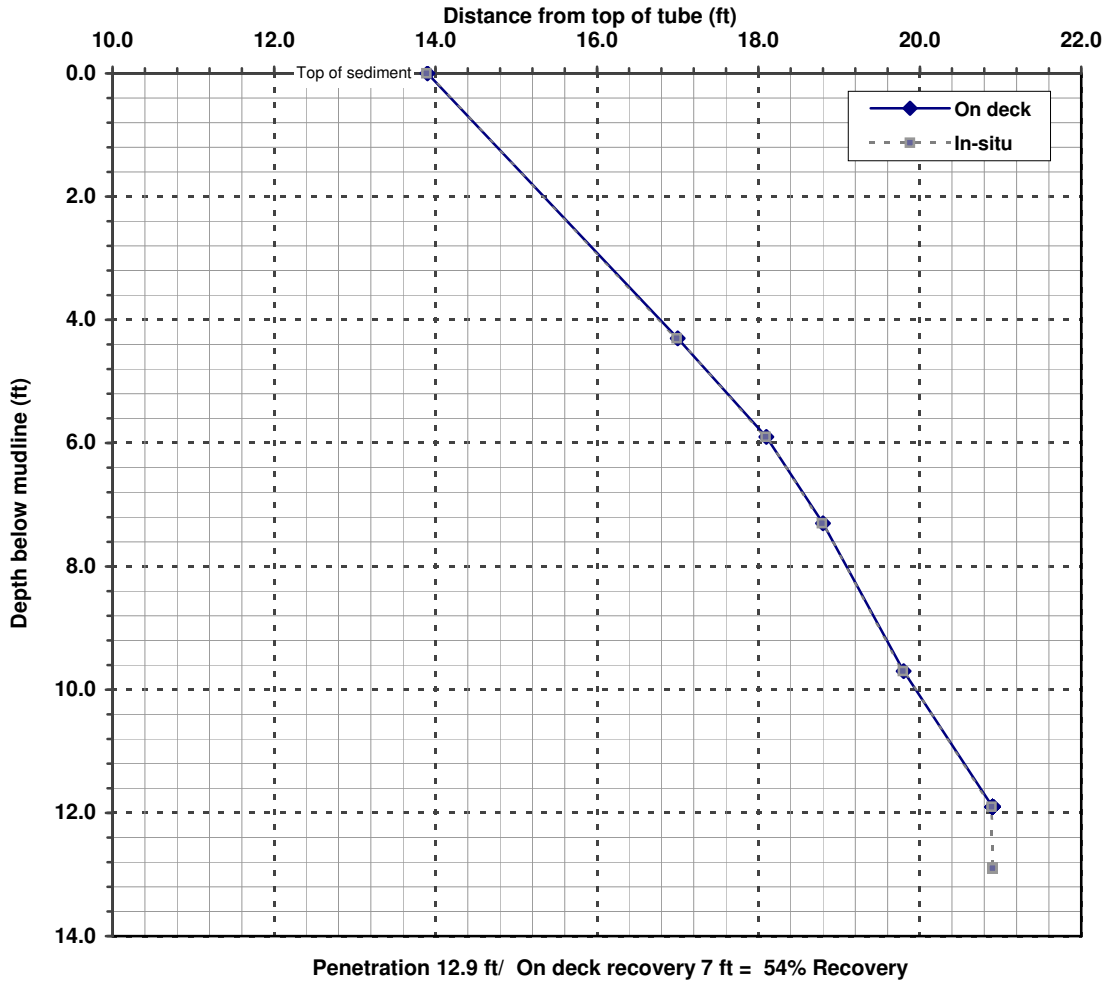

Penetration 12.9 ft/ On deck recovery 7 ft = 54% Recovery

Penetration interval (ft)	Interval recovery (ft)	Percent recovery
0-4.3	3.1	72%
4.3-5.9	1.1	69%
5.9-7.3	0.7	50%
7.3-9.7	1	42%
9.7-11.9	1.1	50%
11.9-12.9	0.01	1%

Depth below mudline (ft)	Distance from top of tube (ft)
Mudline	13.9
1	14.62
2	15.34
3	16.06
4	16.78
5	17.48
6	18.15
7	18.65
8	19.09
9	19.51
10	19.95
11	20.45
12	No sample
13	No sample
14	No sample
15	No sample
16	No sample
17	No sample
18	No sample
19	No sample
20	No sample

AMEC E&I
3500 188th Street SW, Suite 601
Lynnwood, WA 98037

(425) 921-4000
fax (425) 921-4040

Mudmole™ Core Summary Log

Project: Boeing IT
Project No: LY12160140

Station: SD-505

Maximum depth of retained sediment: 10.0 ft
Mudline elevation: -11.6 **ft MLLW**
Percent recovery (on-deck): 54%

	Core collection	Laboratory processing
Date:	2/2/2012	2/2/2012
Time:	8:44	14:30

Field Log: Devin O'Reilly
Summary Log: Nik Bacher

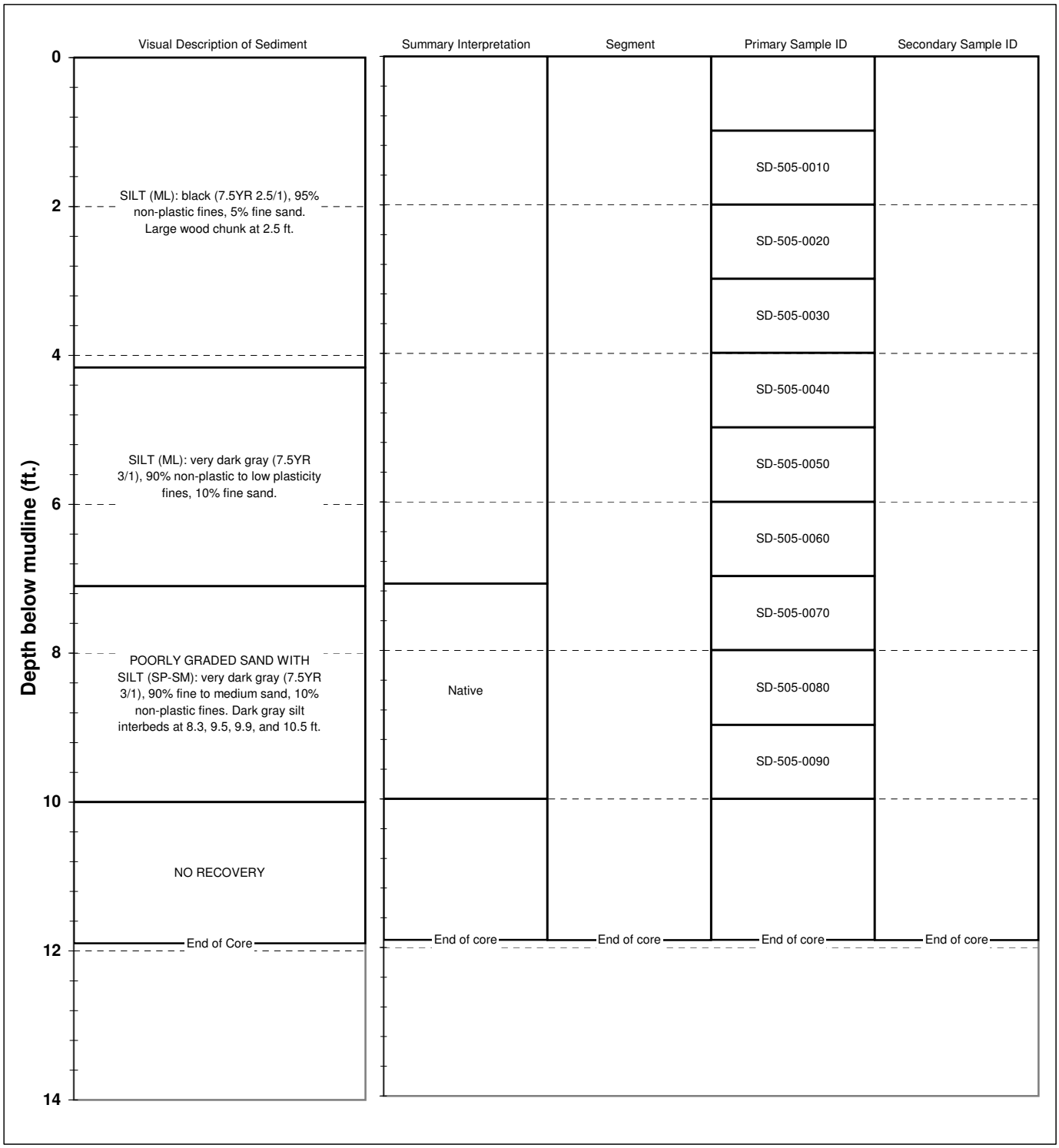

AMEC E&I
3500 188th Street SW, Suite 601
Lynnwood, WA 98037
(425) 921-4000
fax (425) 921-4040

Mudmole™ Bore Log

Project:	Boeing IT	**Station:**	SD-506
Project No:	LY12160140	**Position:**	NAD83 WA N
Collected by:	GSM		194824 Northing
Date:	1/31/2012 **Time:** 9:14		1276074 Easting
Water depth:	12.3 ft **Mudline:** -2.2 ft MLLW		(estimated using tide tables)

Place Field ID Label Here

Weather/Comments: N/A

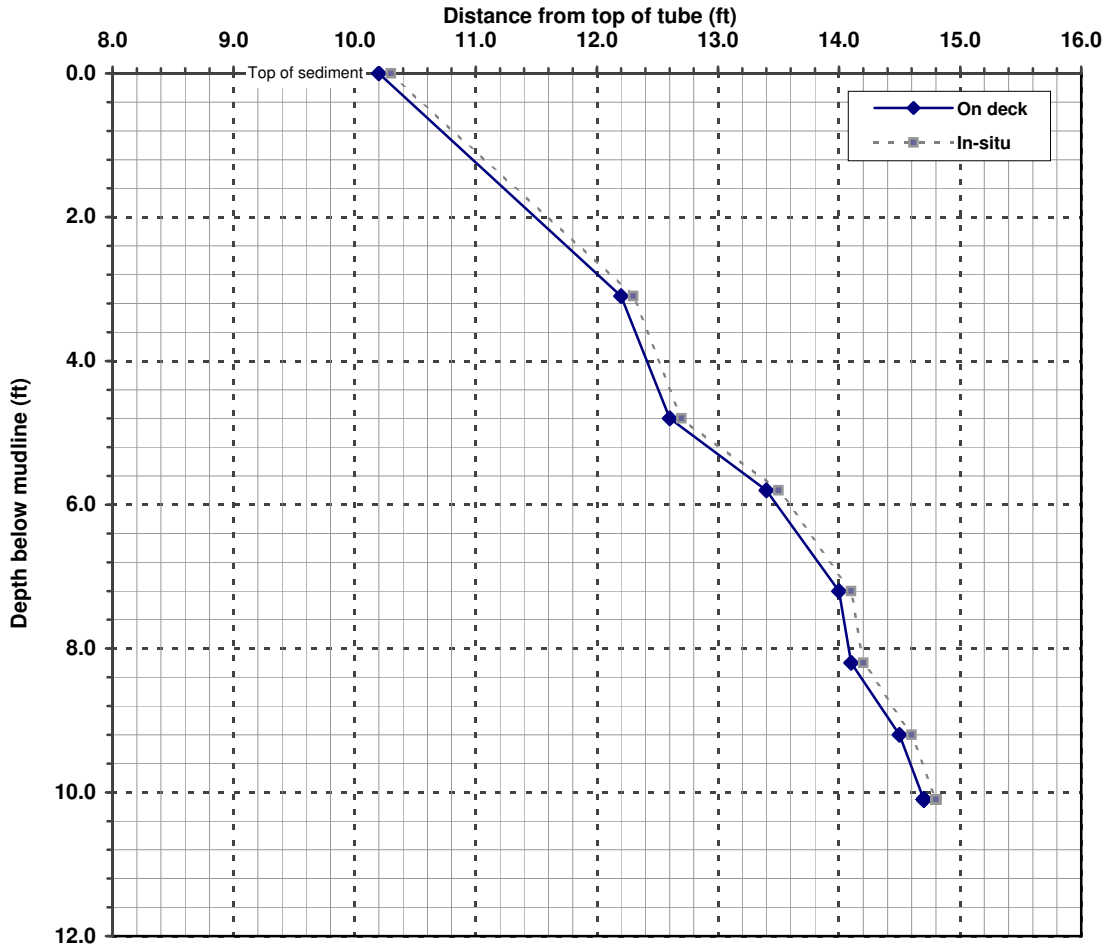

Penetration 10.1 ft/ On deck recovery 4.6 ft = 46% Recovery

Penetration interval (ft)	Interval recovery (ft)	Percent recovery
0-3.1	2	65%
3.1-4.8	0.4	24%
4.8-5.8	0.8	80%
5.8-7.2	0.6	43%
7.2-8.2	0.1	10%
8.2-9.2	0.4	40%
9.2-10.1	0.2	22%

Depth below mudline (ft)	Distance from top of tube (ft)
Mudline	10.2
1	10.85
2	11.49
3	12.14
4	12.41
5	12.76
6	13.49
7	13.91
8	14.08
9	14.42
10	14.68
11	No sample
12	No sample
13	No sample
14	No sample
15	No sample
16	No sample
17	No sample
18	No sample
19	No sample
20	No sample

AMEC E&I
3500 188th Street SW, Suite 601
Lynnwood, WA 98037

(425) 921-4000
fax (425) 921-4040

Mudmole™ Core Summary Log

Project: Boeing IT
Project No: LY12160140

Station: SD-506

Maximum depth of retained sediment: 5.0 ft
Mudline elevation: -2.2 **ft MLLW**
Percent recovery (on-deck): 46%

	Core collection	Laboratory processing
Date:	1/31/2012	1/31/2012
Time:	9:14	12:30

Field Log: Toni Olson
Summary Log: Nik Bacher

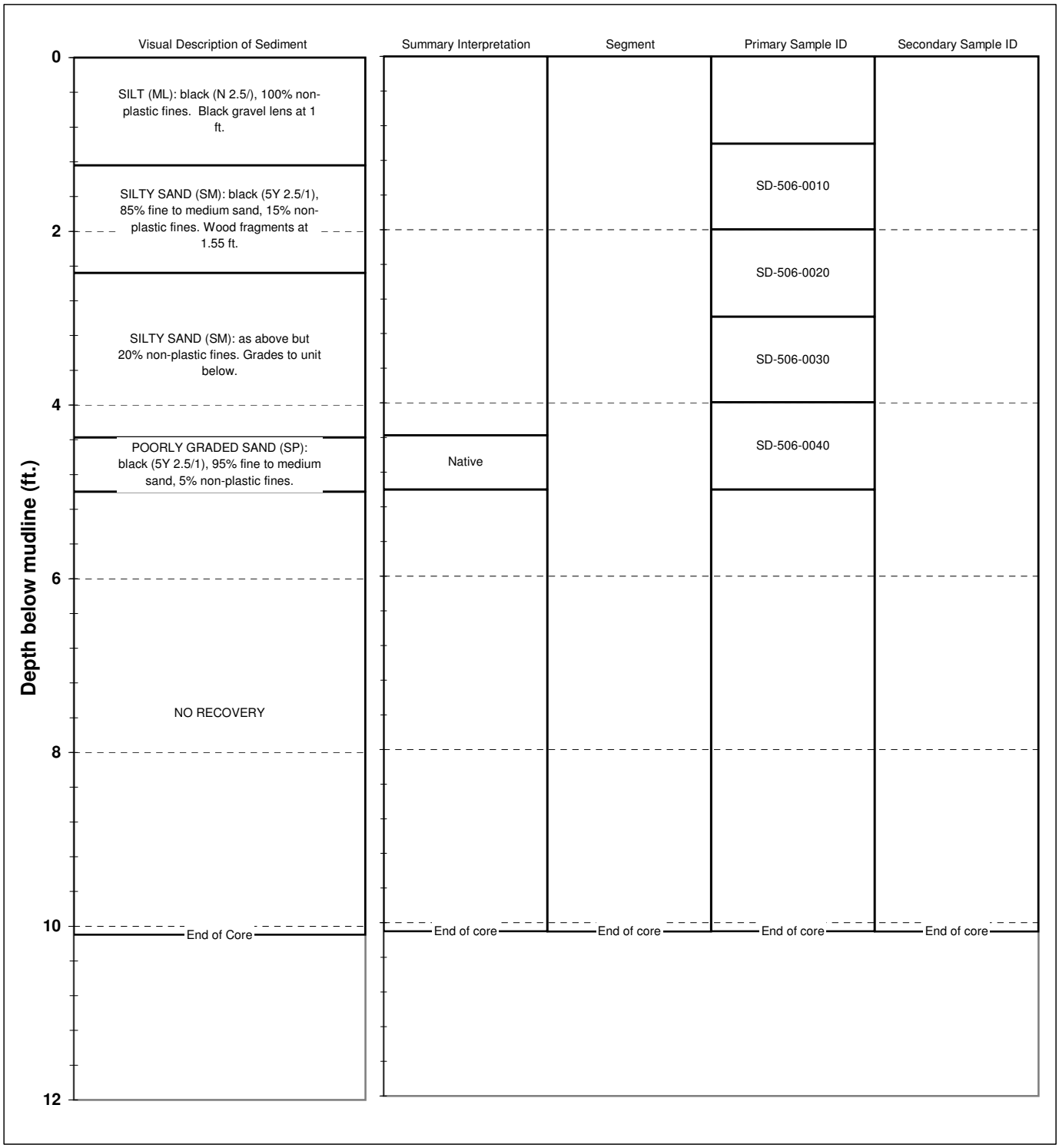

AMEC E&I
3500 188th Street SW, Suite 601
Lynnwood, WA 98037
(425) 921-4000
fax (425) 921-4040

Mudmole™ Bore Log

Project:	Boeing IT	**Station:**	SD-507
Project No:	LY12160140	**Position:**	NAD83 WA N
Collected by:	GSM		194760 Northing
Date:	2/1/2012 **Time:** 10:48		1276031 Easting
Water depth:	21.8 ft **Mudline:** -11.8 ft MLLW		(estimated using tide tables)

Place Field ID Label Here

Weather/Comments: N/A

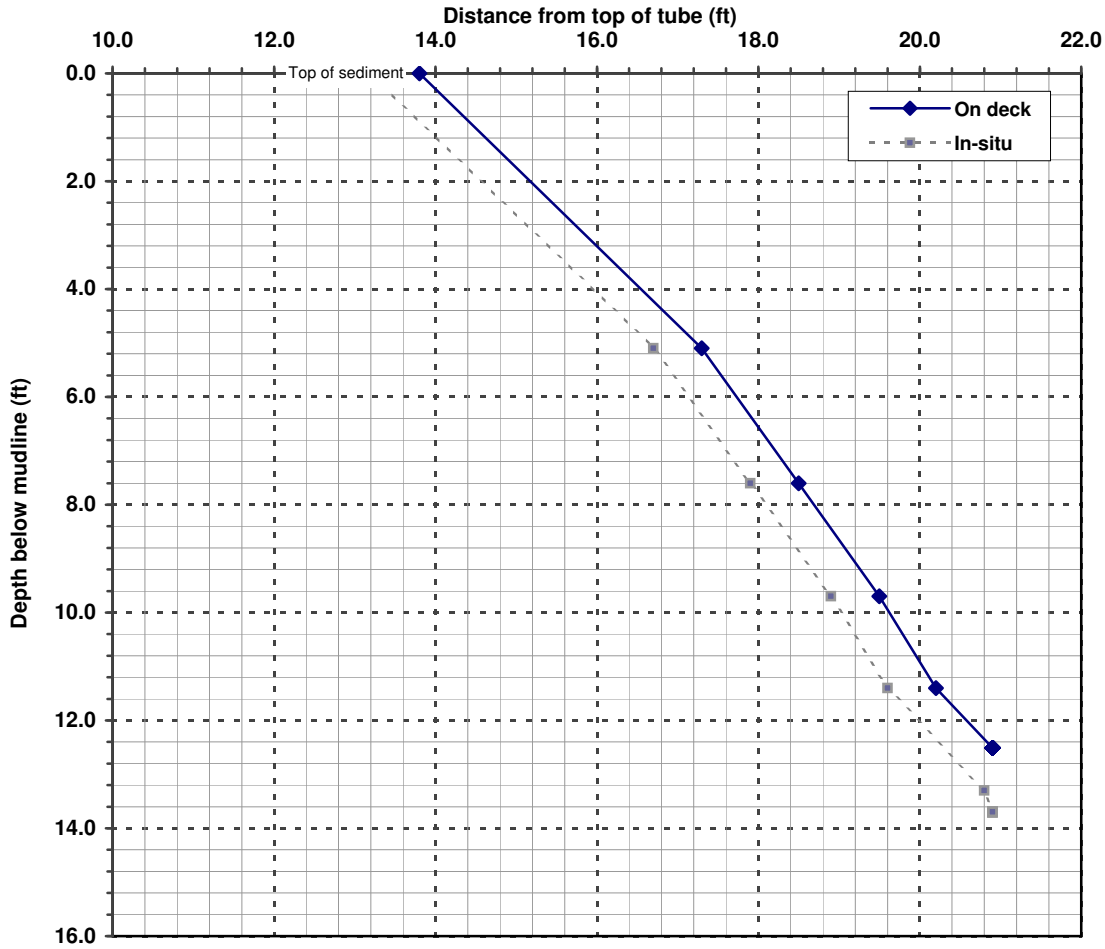

Penetration 13.7 ft/ On deck recovery 7.1 ft = 52% Recovery

Penetration interval (ft)	Interval recovery (ft)	Percent recovery
0-5.1	3.5	69%
5.1-7.6	1.2	48%
7.6-9.7	1	48%
9.7-11.4	0.7	41%
11.4-13.3	1.2	63%
13.3-13.7	0.1	25%

Depth below mudline (ft)	Distance from top of tube (ft)
Mudline	13.8
1	14.49
2	15.17
3	15.86
4	16.55
5	17.23
6	17.73
7	18.21
8	18.69
9	19.17
10	19.62
11	20.04
12	20.58
13	No sample
14	No sample
15	No sample
16	No sample
17	No sample
18	No sample
19	No sample
20	No sample

AMEC E&I
3500 188th Street SW, Suite 601
Lynnwood, WA 98037

(425) 921-4000
fax (425) 921-4040

Mudmole™ Core Summary Log

Project: Boeing IT
Project No: LY12160140

Station: SD-507

Maximum depth of retained sediment: 11.0 ft
Mudline elevation: -11.8 **ft MLLW**
Percent recovery (on-deck): 52%

	Core collection	Laboratory processing
Date:	2/1/2012	2/1/2012
Time:	10:48	13:15

Field Log: Toni Olson
Summary Log: Nik Bacher

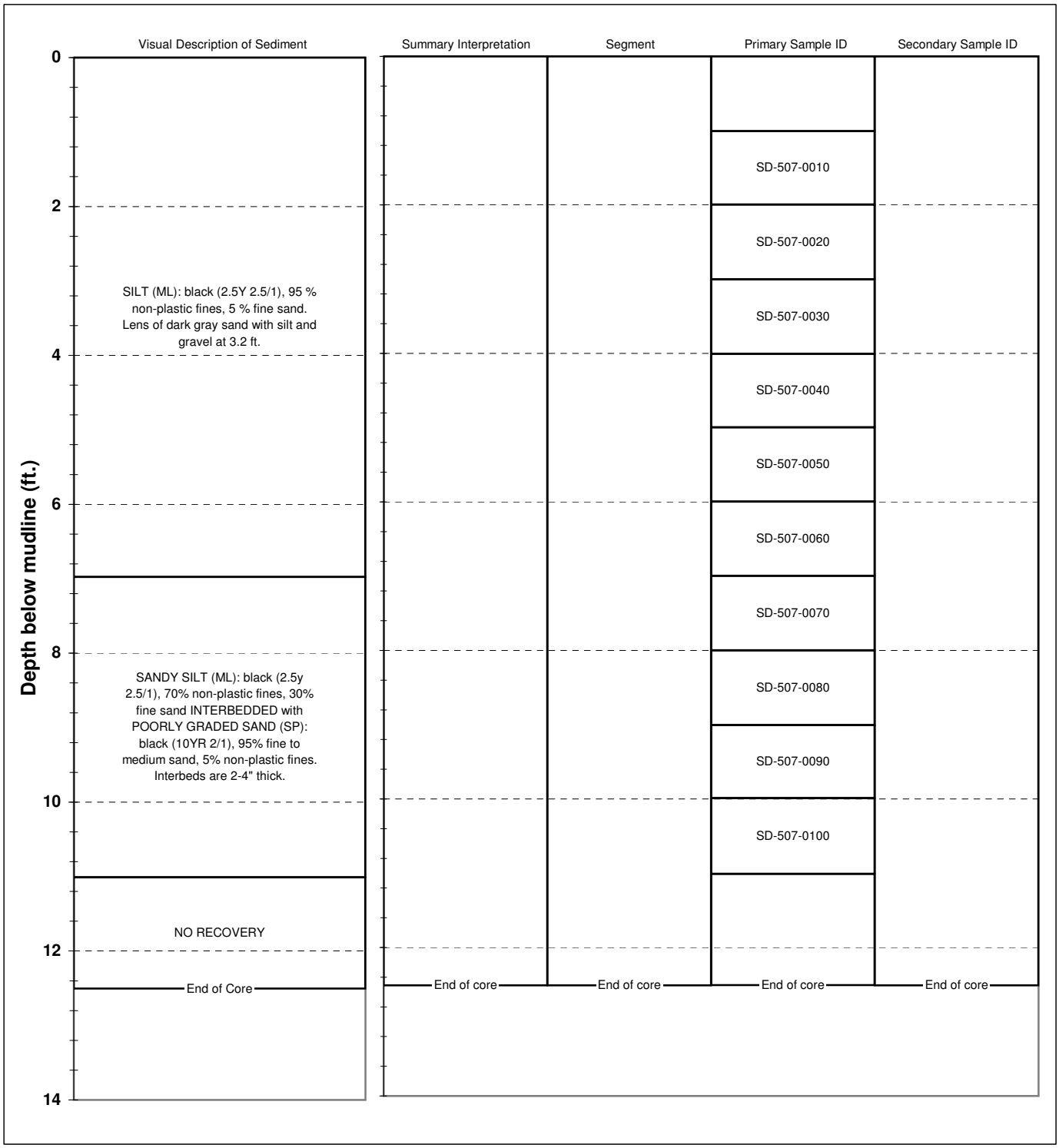

AMEC E&I
3500 188th Street SW, Suite 601
Lynnwood, WA 98037
(425) 921-4000
fax (425) 921-4040

Mudmole™ Bore Log

Project:	Boeing IT	**Station:**	SD-508
Project No:	LY12160140	**Position:**	NAD83 WA N
Collected by:	GSM		194702 Northing
Date:	1/31/2012 **Time:** 10:27		1276119 Easting
Water depth:	13.3 ft **Mudline:** -2.9 ft MLLW		(estimated using tide tables)

Place Field ID Label Here

Weather/Comments: N/A

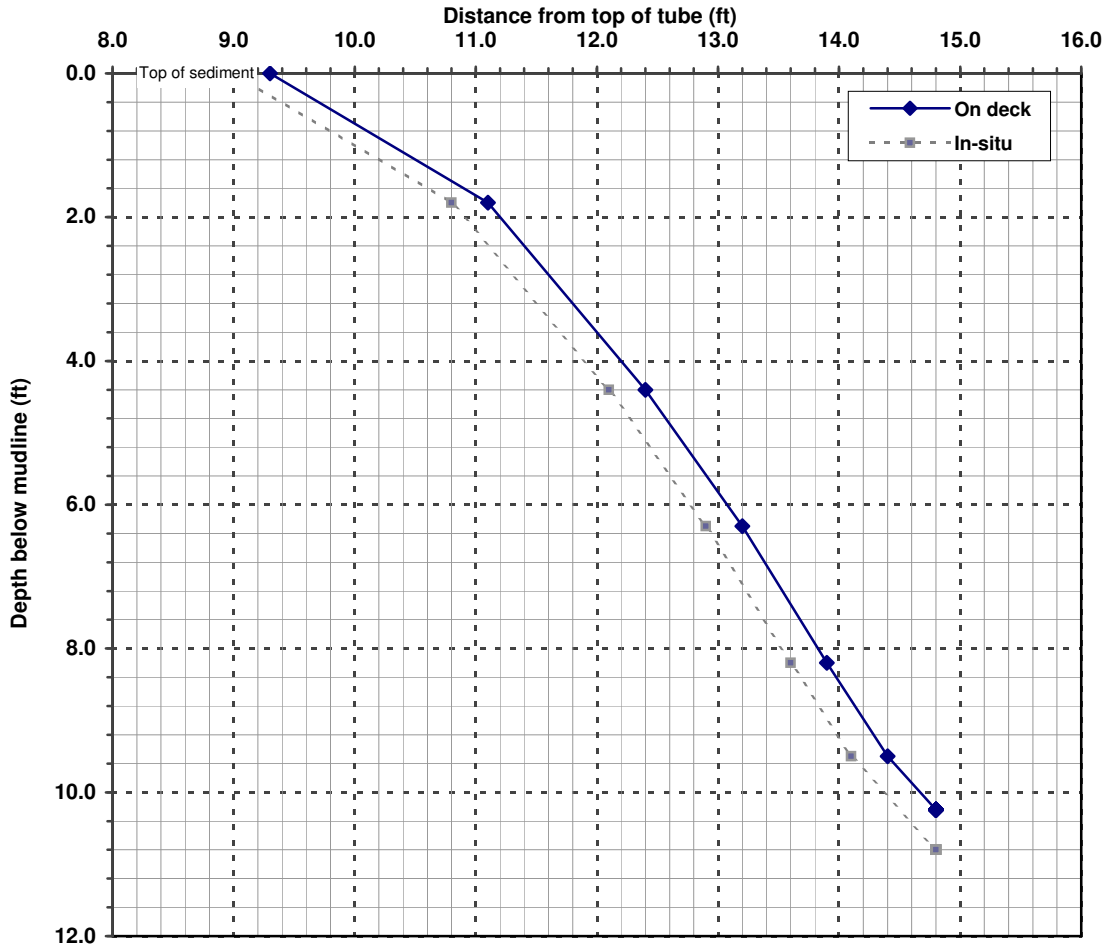

Penetration 10.8 ft/ On deck recovery 5.5 ft = 51% Recovery

Penetration interval (ft)	Interval recovery (ft)	Percent recovery
0-1.8	1.8	100%
1.8-4.4	1.3	50%
4.4-6.3	0.8	42%
6.3-8.2	0.7	37%
8.2-9.5	0.5	38%
9.5-10.8	0.7	54%

Depth below mudline (ft)	Distance from top of tube (ft)
Mudline	9.3
1	10.30
2	11.20
3	11.70
4	12.20
5	12.65
6	13.07
7	13.46
8	13.83
9	14.21
10	14.67
11	No sample
12	No sample
13	No sample
14	No sample
15	No sample
16	No sample
17	No sample
18	No sample
19	No sample
20	No sample

AMEC E&I
3500 188th Street SW, Suite 601
Lynnwood, WA 98037

(425) 921-4000
fax (425) 921-4040

Mudmole™ Core Summary Log

Project: Boeing IT
Project No: LY12160140

Station: **SD-508**

Maximum depth of retained sediment: 10.0 ft
Mudline elevation: -2.9 **ft MLLW**
Percent recovery (on-deck): 51%

	Core collection	Laboratory processing
Date:	1/31/2012	1/31/2012
Time:	10:27	13:30

Field Log: Toni Olson
Summary Log: Nik Bacher

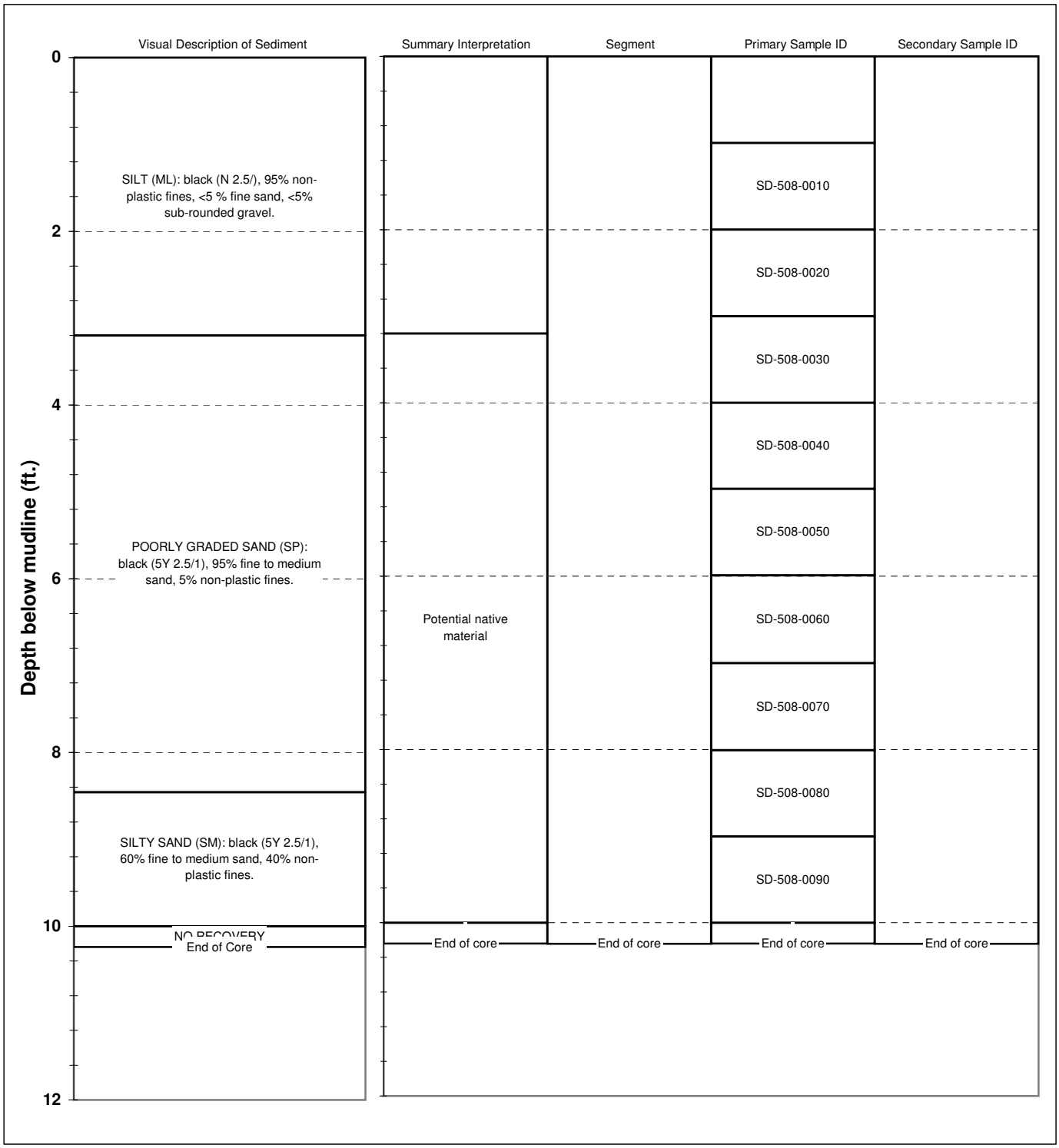

AMEC E&I
3500 188th Street SW, Suite 601
Lynnwood, WA 98037
(425) 921-4000
fax (425) 921-4040

Mudmole™ Bore Log

Project:	Boeing IT	**Station:**	SD-509
Project No:	LY12160140	**Position:**	NAD83 WA N
Collected by:	GSM		194639 Northing
Date:	2/1/2012 **Time:** 12:47		1276061 Easting
Water depth:	19.9 ft **Mudline:** -11.0 ft MLLW		(estimated using tide tables)

Place Field ID Label Here

Weather/Comments: N/A

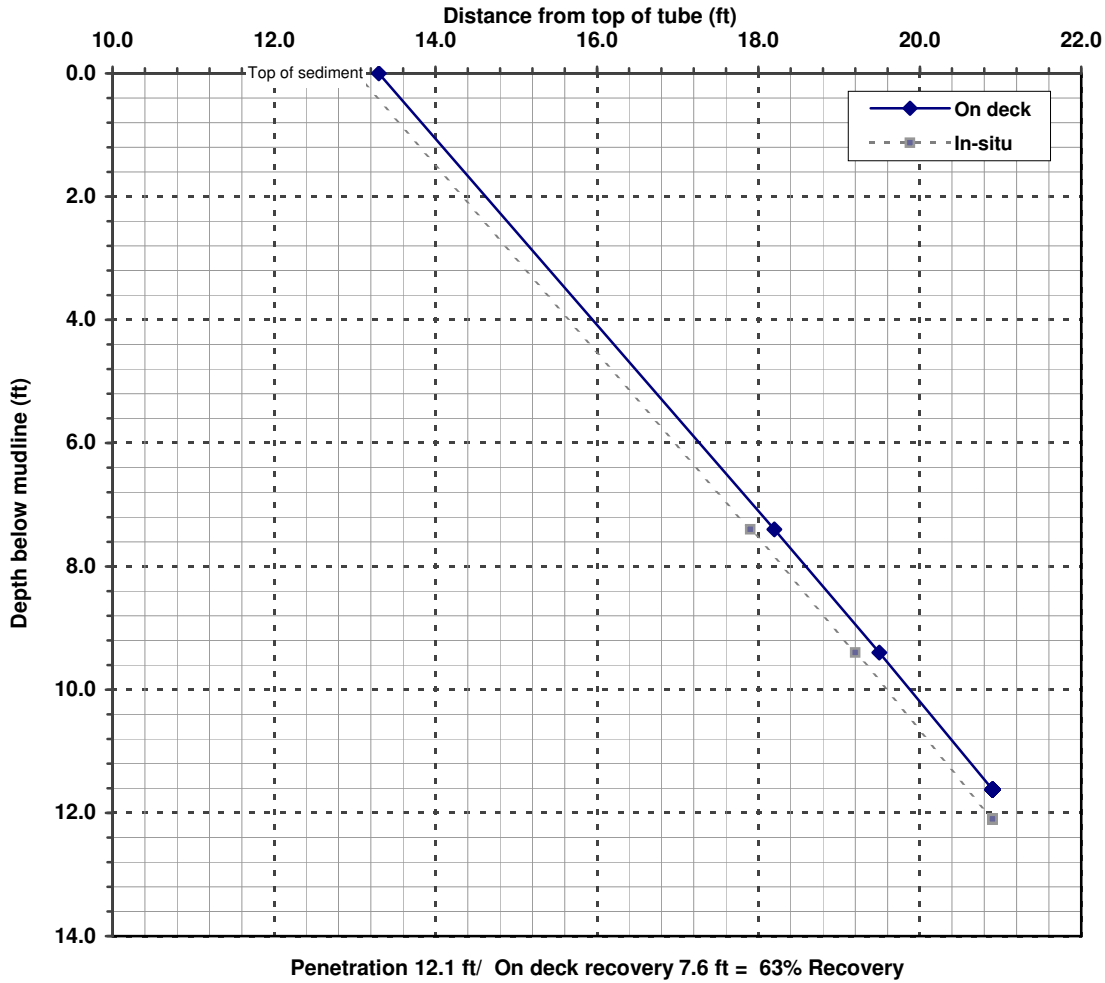

Penetration 12.1 ft/ On deck recovery 7.6 ft = 63% Recovery

Penetration interval (ft)	Interval recovery (ft)	Percent recovery
0-7.4	4.9	66%
7.4-9.4	1.3	65%
9.4-12.1	1.7	63%

Depth below mudline (ft)	Distance from top of tube (ft)
Mudline	13.3
1	13.96
2	14.62
3	15.29
4	15.95
5	16.61
6	17.27
7	17.94
8	18.59
9	19.24
10	19.88
11	20.51
12	No sample
13	No sample
14	No sample
15	No sample
16	No sample
17	No sample
18	No sample
19	No sample
20	No sample

AMEC E&I
3500 188th Street SW, Suite 601
Lynnwood, WA 98037

(425) 921-4000
fax (425) 921-4040

Mudmole™ Core Summary Log

Project: Boeing IT
Project No: LY12160140

Station: SD-509

Maximum depth of retained sediment: 11.0 ft
Mudline elevation: -11.0 **ft MLLW**
Percent recovery (on-deck): 63%

	Core collection	Laboratory processing
Date:	2/1/2012	2/2/2012
Time:	12:47	11:10

Field Log: Devin O'Reilly
Summary Log: Nik Bacher

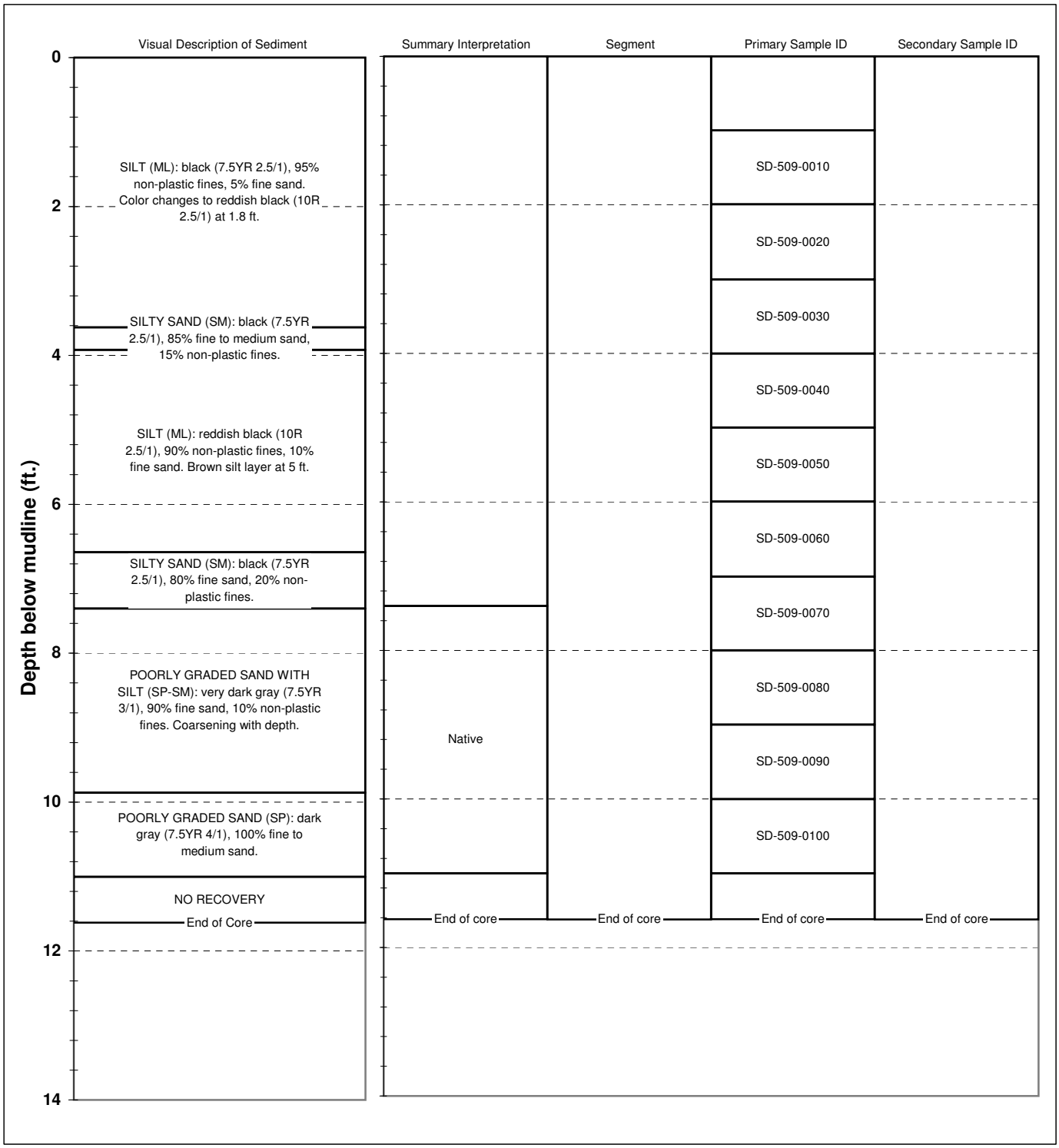

AMEC E&I
3500 188th Street SW, Suite 601
Lynnwood, WA 98037
(425) 921-4000
fax (425) 921-4040

Mudmole™ Bore Log

Project: Boeing IT
Station: SD-510
Project No: LY12160140
Position: NAD83 WA N
Collected by: GSM
194582 Northing
Date: 1/31/2012 **Time:** 12:34
1276152 Easting
Water depth: 8.6 ft **Mudline:** -0.1 ft MLLW (estimated using tide tables)

Place Field ID Label Here

Weather/Comments: N/A

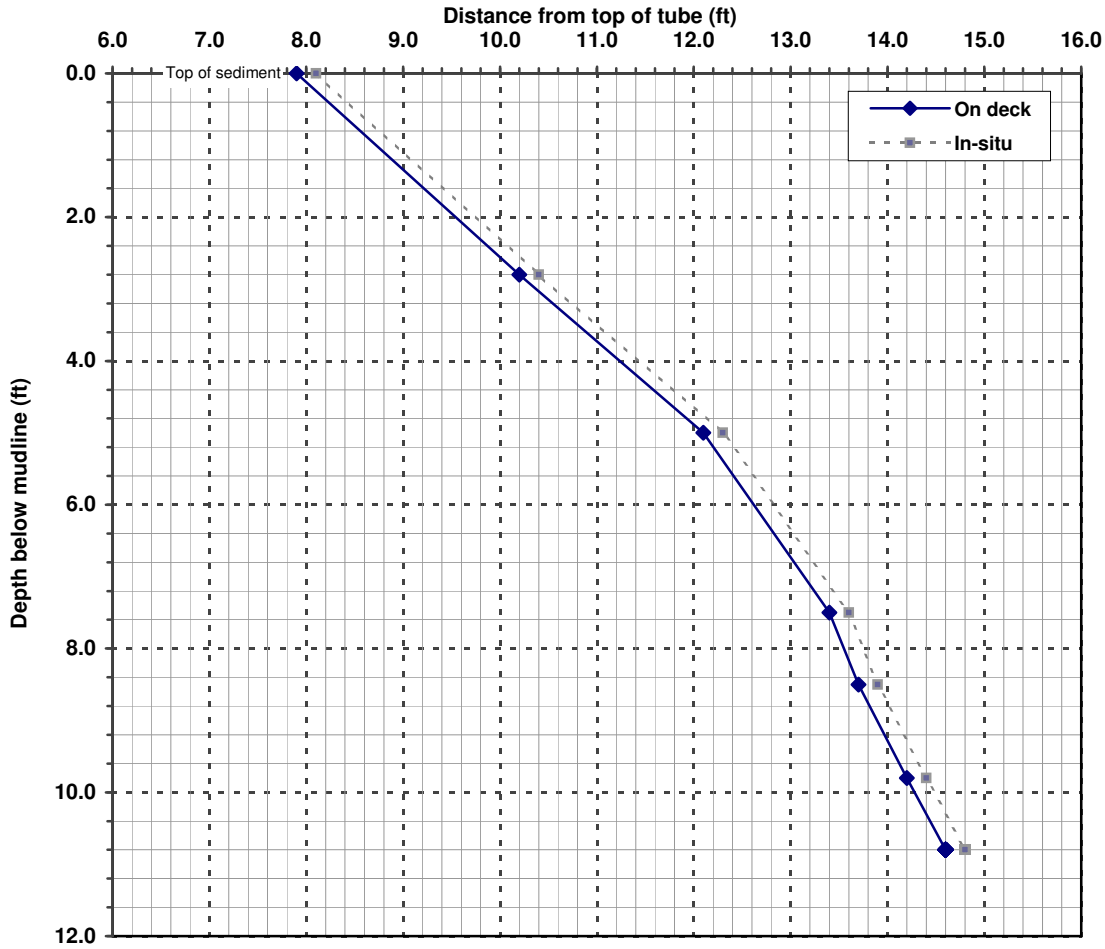

Penetration 10.8 ft/ On deck recovery 6.9 ft = 64% Recovery

Penetration interval (ft)	Interval recovery (ft)	Percent recovery
0-2.8	2.3	82%
2.8-5	1.9	86%
5-7.5	1.3	52%
7.5-8.5	0.3	30%
8.5-9.8	0.5	38%
9.8-10.8	0.4	40%

Depth below mudline (ft)	Distance from top of tube (ft)
Mudline	7.9
1	8.72
2	9.54
3	10.37
4	11.24
5	12.10
6	12.62
7	13.14
8	13.55
9	13.89
10	14.28
11	No sample
12	No sample
13	No sample
14	No sample
15	No sample
16	No sample
17	No sample
18	No sample
19	No sample
20	No sample

AMEC E&I
3500 188th Street SW, Suite 601
Lynnwood, WA 98037
(425) 921-4000
fax (425) 921-4040

Mudmole™ Core Summary Log

Project: Boeing IT
Project No: LY12160140

Station: **SD-510**

Maximum depth of retained sediment: 10.0 ft
Mudline elevation: -0.1 **ft MLLW**
Percent recovery (on-deck): 64%

	Core collection	Laboratory processing
Date:	1/31/2012	2/1/2012
Time:	12:34	9:45

Field Log: Toni Olson
Summary Log: Nik Bacher

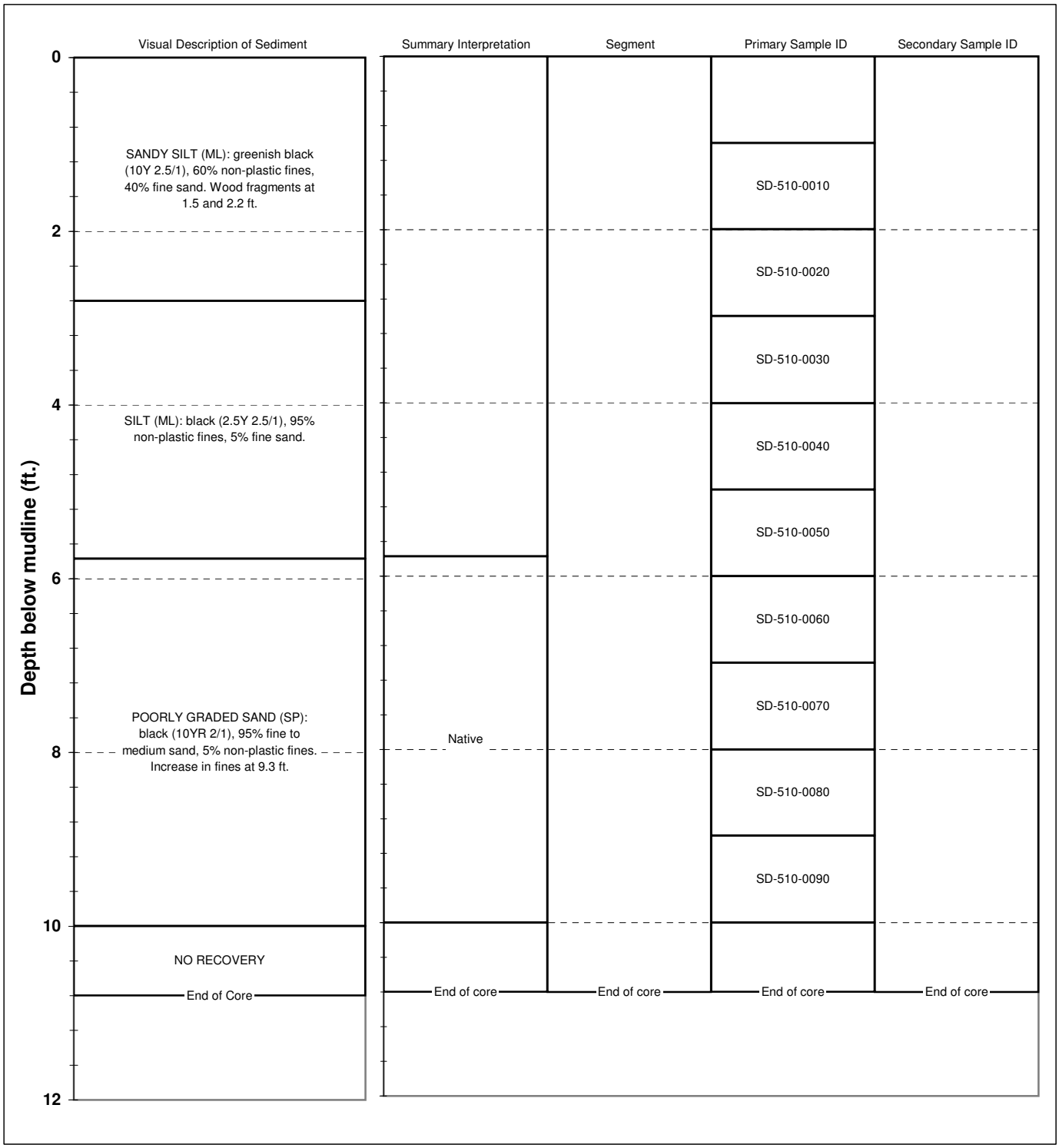

AMEC E&I
3500 188th Street SW, Suite 601
Lynnwood, WA 98037
(425) 921-4000
fax (425) 921-4040

Mudmole™ Bore Log

Project:	Boeing IT	**Station:**	SD-511
Project No:	LY12160140	**Position:**	NAD83 WA N
Collected by:	GSM		194524 Northing
Date:	2/1/2012 **Time:** 14:06		1276091 Easting
Water depth:	17.4 ft **Mudline:** -10.5 ft MLLW		(estimated using tide tables)

Place Field ID Label Here

Weather/Comments: N/A

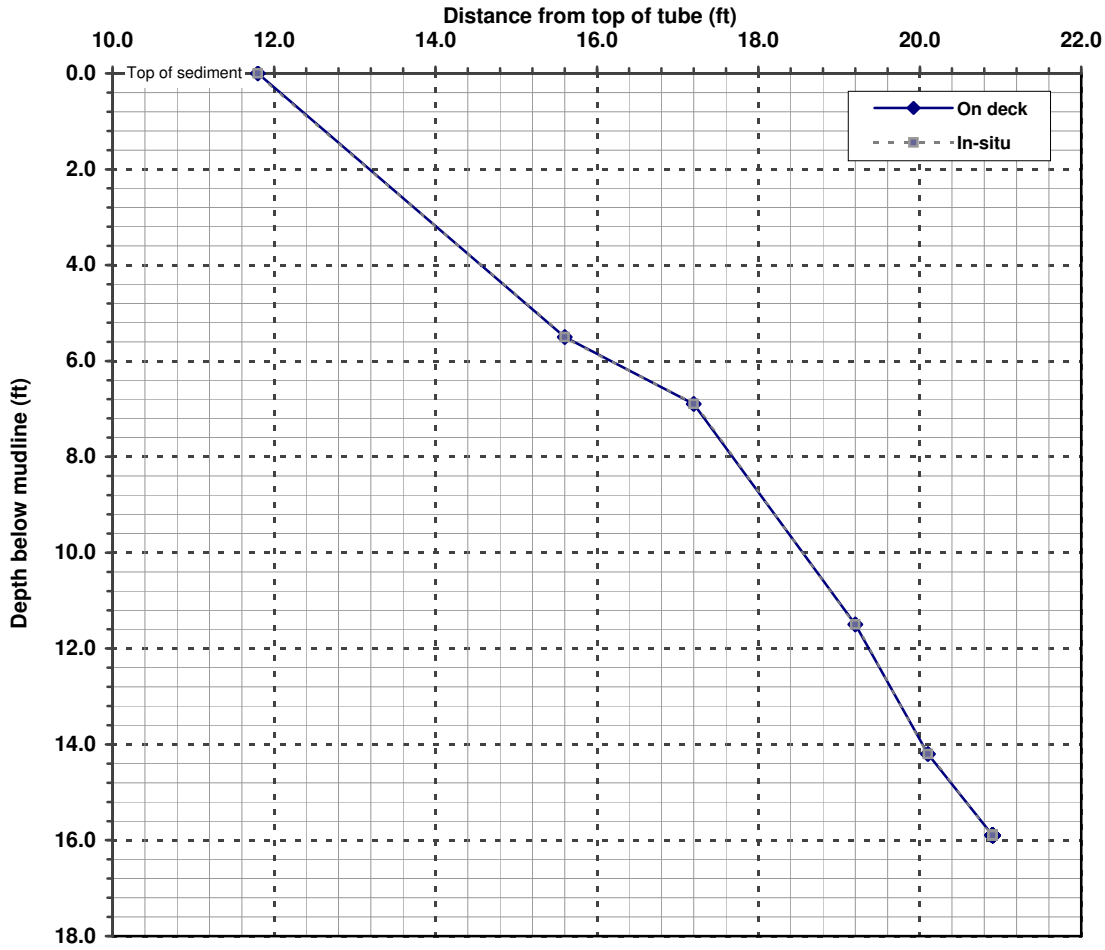

Penetration 15.9 ft/ On deck recovery 9.1 ft = 57% Recovery

Penetration interval (ft)	Interval recovery (ft)	Percent recovery
0-5.5	3.8	69%
5.5-6.9	1.6	114%
6.9-11.5	2	43%
11.5-14.2	0.9	33%
14.2-15.9	0.8	47%

Depth below mudline (ft)	Distance from top of tube (ft)
Mudline	11.8
1	12.49
2	13.18
3	13.87
4	14.56
5	15.25
6	16.17
7	17.24
8	17.68
9	18.11
10	18.55
11	18.98
12	19.37
13	19.70
14	20.03
15	20.48
16	No sample
17	No sample
18	No sample
19	No sample
20	No sample

AMEC E&I
3500 188th Street SW, Suite 601
Lynnwood, WA 98037

(425) 921-4000
fax (425) 921-4040

Mudmole™ Core Summary Log

Project: Boeing IT
Project No: LY12160140

Station: **SD-511**

Maximum depth of retained sediment: 14.8 ft
Mudline elevation: -10.5 **ft MLLW**
Percent recovery (on-deck): 57%

	Core collection	Laboratory processing
Date:	2/1/2012	2/2/2012
Time:	14:06	8:45

Field Log: Devin O'Reilly
Summary Log: Nik Bacher

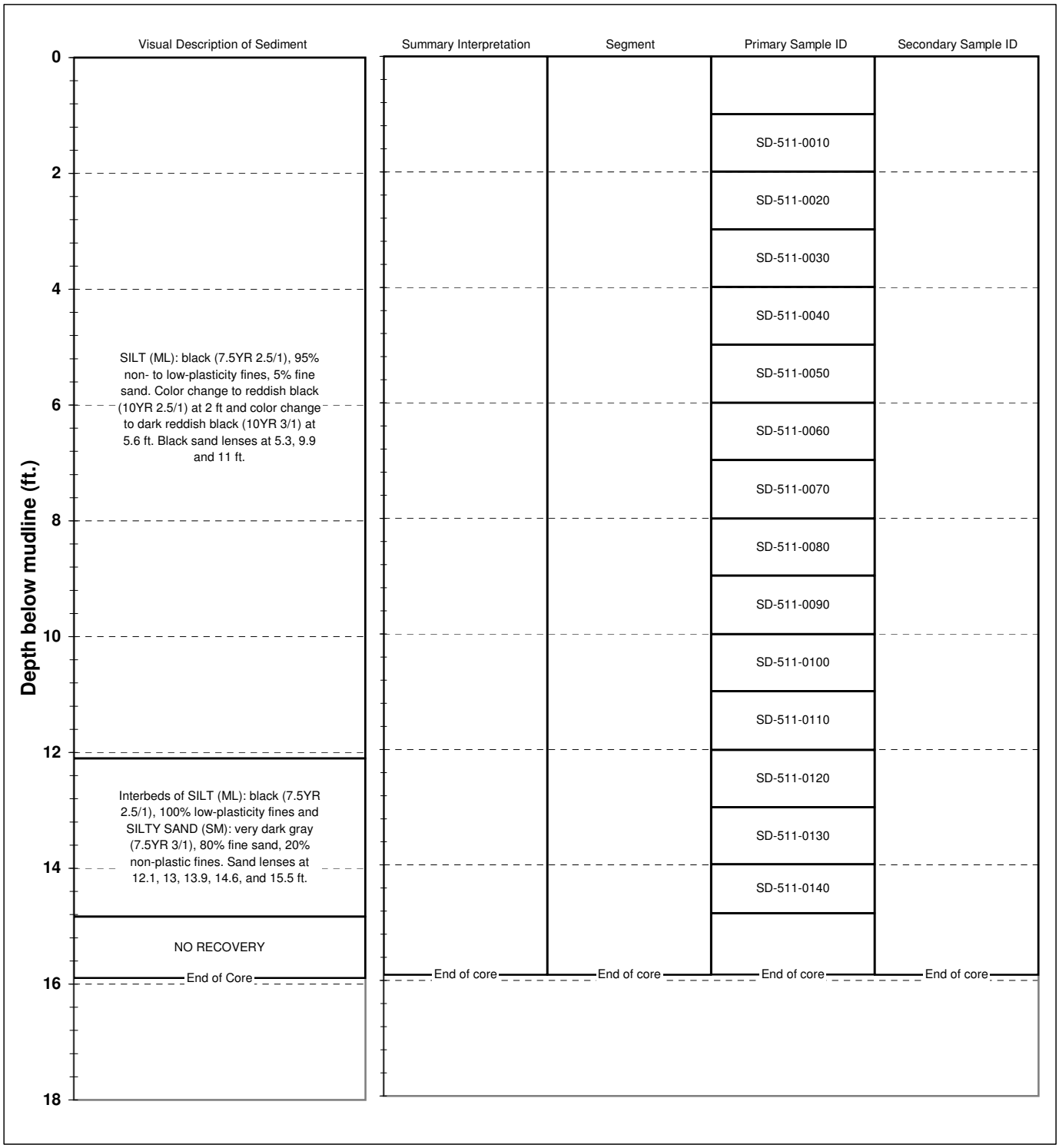

AMEC E&I
3500 188th Street SW, Suite 601
Lynnwood, WA 98037

(425) 921-4000
fax (425) 921-4040

Mudmole™ Bore Log

Project:	Boeing IT	**Station:**	SD-512
Project No:	LY12160140	**Position:**	NAD83 WA N
Collected by:	GSM		194462 Northing
Date:	2/2/2012 **Time:** 12:03		1276181 Easting
Water depth:	9.3 ft **Mudline:** 0.5 ft MLLW		(estimated using tide tables)

Place Field ID Label Here

Weather/Comments: N/A

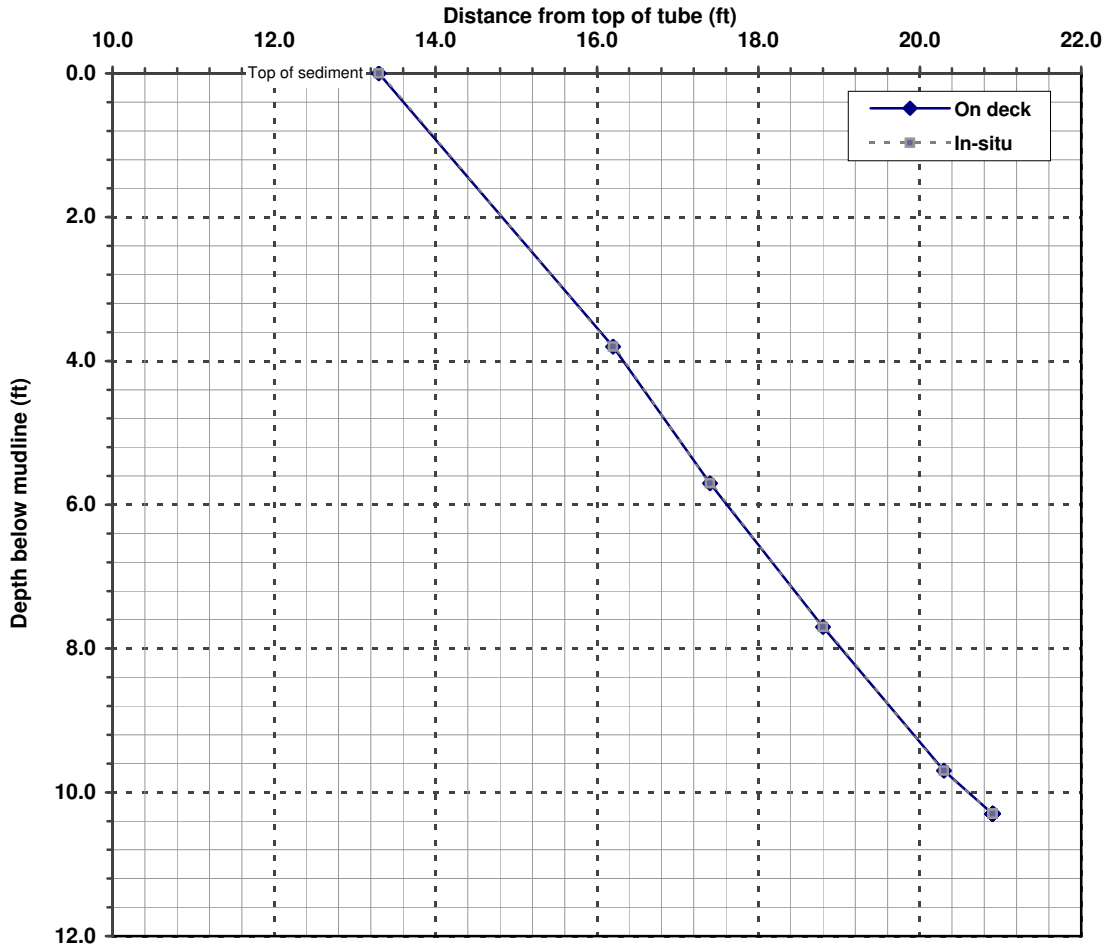

Penetration 10.3 ft/ On deck recovery 7.6 ft = 74% Recovery

Penetration interval (ft)	Interval recovery (ft)	Percent recovery
0-3.8	2.9	76%
3.8-5.7	1.2	63%
5.7-7.7	1.4	70%
7.7-9.7	1.5	75%
9.7-10.3	0.6	100%

Depth below mudline (ft)	Distance from top of tube (ft)
Mudline	13.3
1	14.06
2	14.83
3	15.59
4	16.33
5	16.96
6	17.61
7	18.31
8	19.03
9	19.78
10	20.60
11	No sample
12	No sample
13	No sample
14	No sample
15	No sample
16	No sample
17	No sample
18	No sample
19	No sample
20	No sample

AMEC E&I
3500 188th Street SW, Suite 601
Lynnwood, WA 98037

(425) 921-4000
fax (425) 921-4040

Mudmole™ Core Summary Log

Project: Boeing IT
Project No: LY12160140

Station: **SD-512**

Maximum depth of retained sediment: 10.3 ft
Percent recovery (on-deck): 74%

Mudline elevation: 0.5 **ft MLLW**

	Core collection	Laboratory processing
Date:	2/2/2012	2/3/2012
Time:	12:03	10:05

Field Log: Devin O'Reilly
Summary Log: Nik Bacher

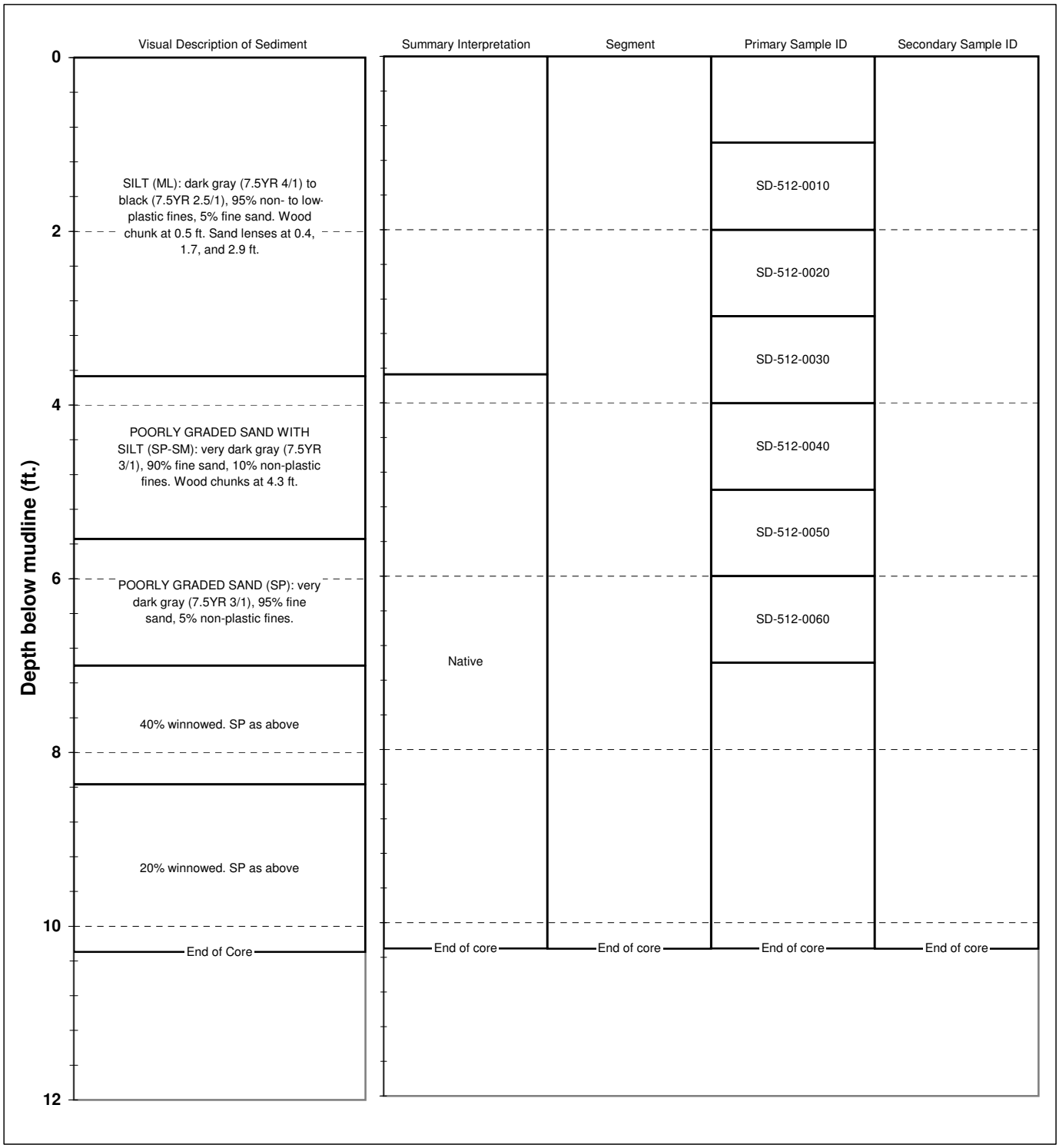

AMEC E&I
3500 188th Street SW, Suite 601
Lynnwood, WA 98037
(425) 921-4000
fax (425) 921-4040

Mudmole™ Bore Log

Project: Boeing IT
Station: SD-513
Project No: LY12160140
Position: NAD83 WA N
Collected by: GSM
194402 Northing
Date: 2/1/2012 **Time:** 10:40
1276123 Easting
Water depth: 18.8 ft **Mudline:** -8.8 ft MLLW (estimated using tide tables)

Place Field ID Label Here

Weather/Comments: N/A

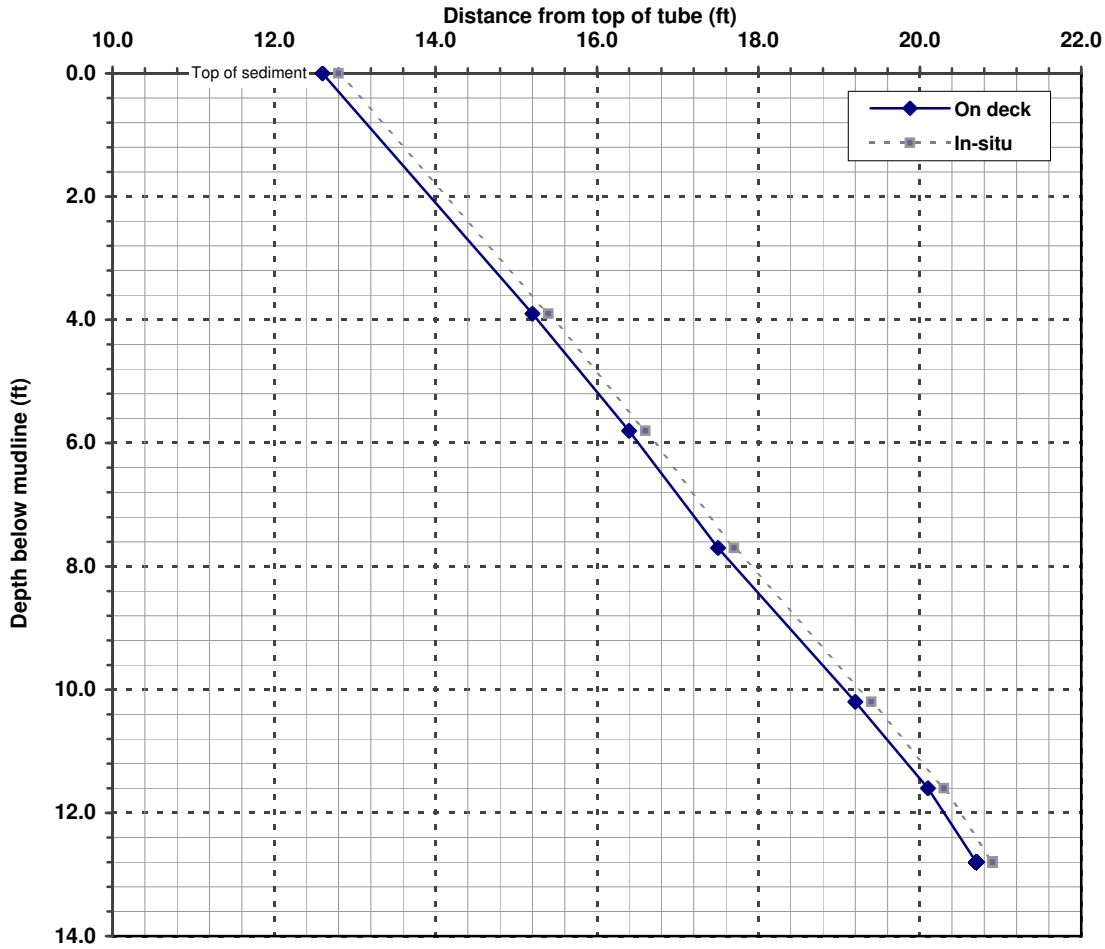

Penetration 12.8 ft/ On deck recovery 8.3 ft = 65% Recovery

Penetration interval (ft)	Interval recovery (ft)	Percent recovery
0-3.9	2.6	67%
3.9-5.8	1.2	63%
5.8-7.7	1.1	58%
7.7-10.2	1.7	68%
10.2-11.6	0.9	64%
11.6-12.8	0.6	50%

Depth below mudline (ft)	Distance from top of tube (ft)
Mudline	12.6
1	13.27
2	13.93
3	14.60
4	15.26
5	15.89
6	16.52
7	17.09
8	17.70
9	18.38
10	19.06
11	19.71
12	20.30
13	No sample
14	No sample
15	No sample
16	No sample
17	No sample
18	No sample
19	No sample
20	No sample

AMEC E&I
3500 188th Street SW, Suite 601
Lynnwood, WA 98037
(425) 921-4000
fax (425) 921-4040

Mudmole™ Core Summary Log

Project: Boeing IT
Project No: LY12160140

Station: **SD-513**

Maximum depth of retained sediment: 12.0 ft
Mudline elevation: -8.8 **ft MLLW**
Percent recovery (on-deck): 65%

	Core collection	Laboratory processing
Date:	2/1/2012	2/2/2012
Time:	10:40	13:00

Field Log: Devin O'Reilly
Summary Log: Nik Bacher

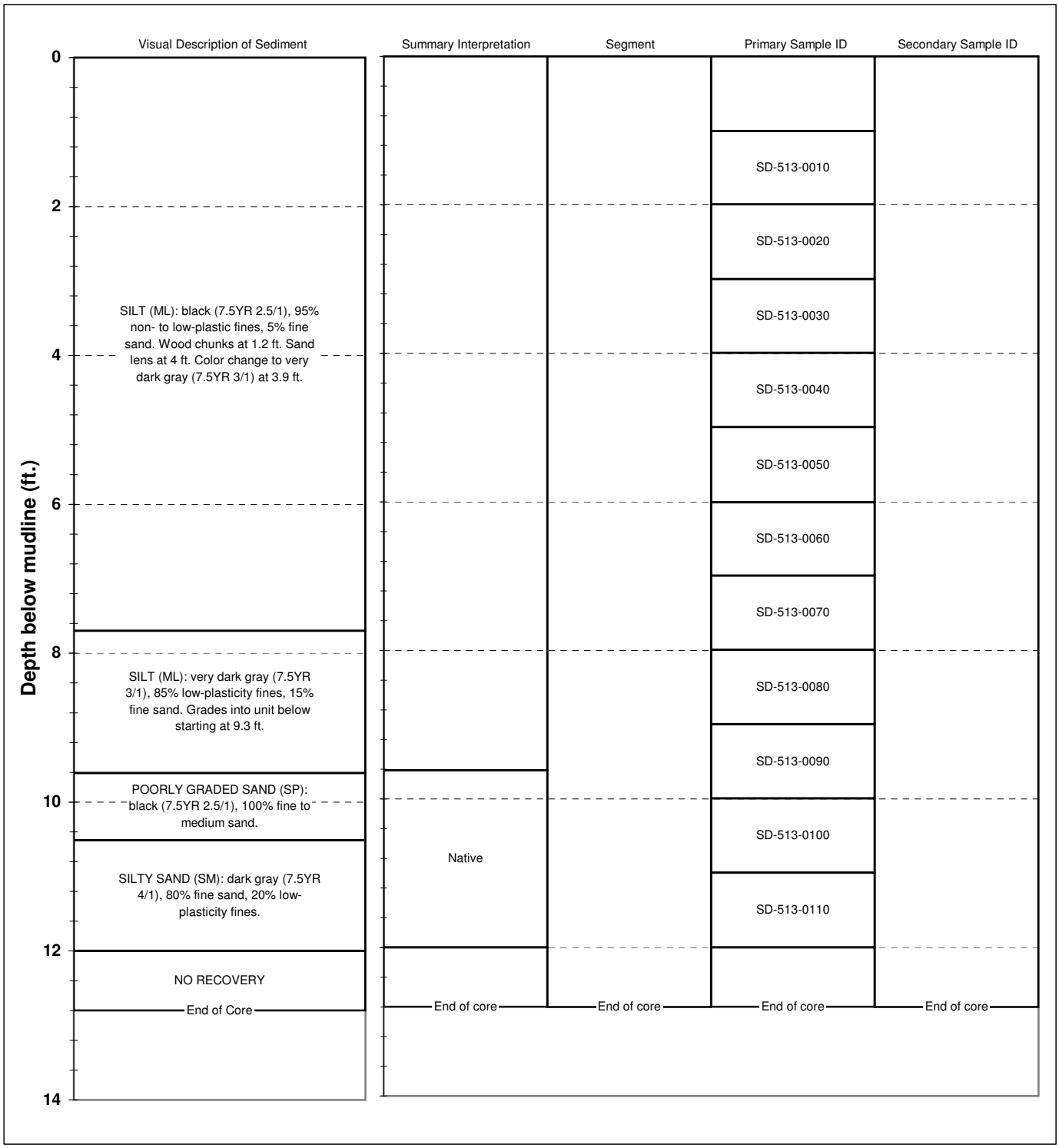

AMEC E&I
3500 188th Street SW, Suite 601
Lynnwood, WA 98037
(425) 921-4000
fax (425) 921-4040

Mudmole™ Bore Log

Project: Boeing IT
Station: SD-514
Project No: LY12160140
Position: NAD83 WA N
Collected by: GSM
194341 Northing
Date: 2/3/2012 **Time:** 11:50
1276212 Easting
Water depth: 9.9 ft **Mudline:** -0.5 ft MLLW (estimated using tide tables)

Place Field ID Label Here

Weather/Comments: N/A

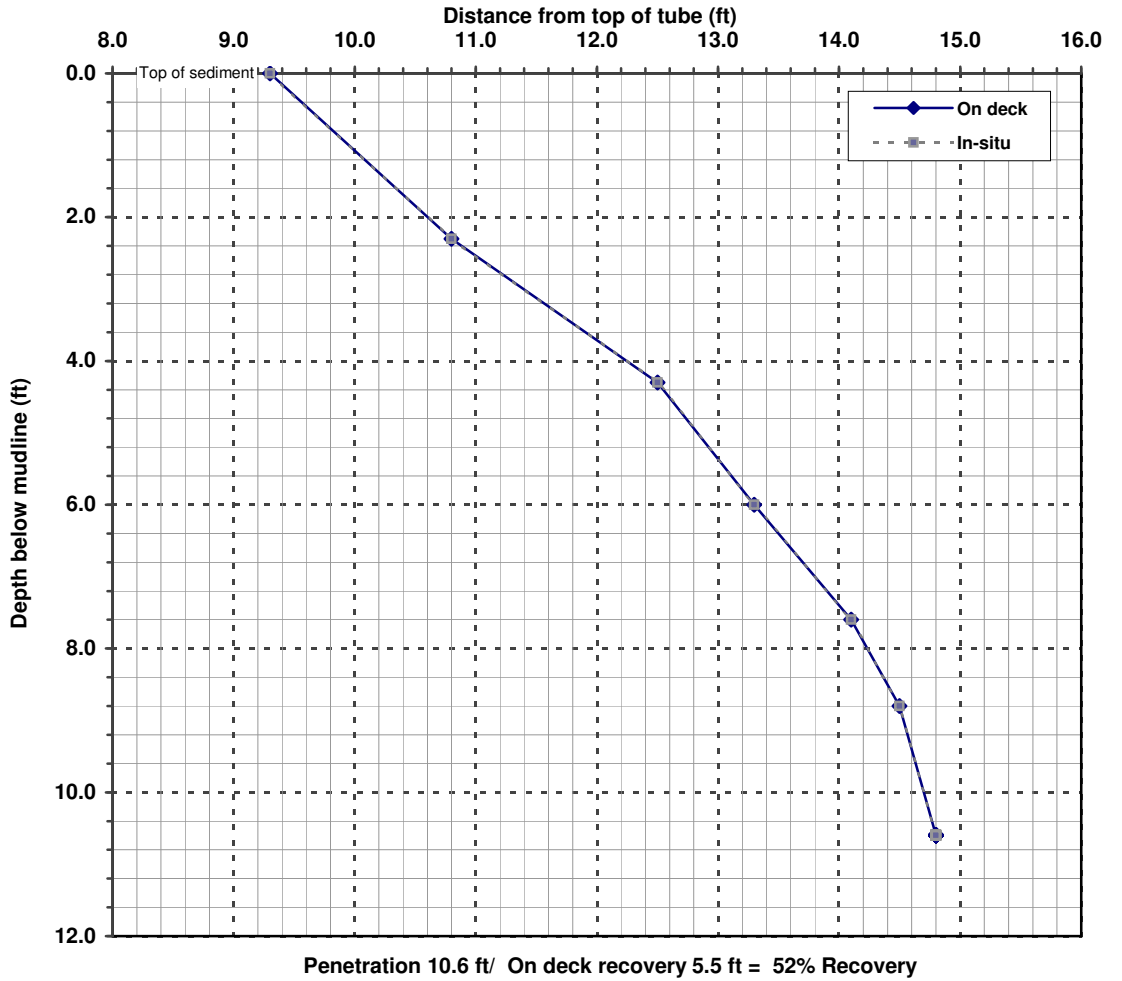

Penetration 10.6 ft/ On deck recovery 5.5 ft = 52% Recovery

Penetration interval (ft)	Interval recovery (ft)	Percent recovery
0-2.3	1.5	65%
2.3-4.3	1.7	85%
4.3-6	0.8	47%
6-7.6	0.8	50%
7.6-8.8	0.4	33%
8.8-10.6	0.3	17%

Depth below mudline (ft)	Distance from top of tube (ft)
Mudline	9.3
1	9.95
2	10.60
3	11.40
4	12.25
5	12.83
6	13.30
7	13.80
8	14.23
9	14.53
10	14.70
11	No sample
12	No sample
13	No sample
14	No sample
15	No sample
16	No sample
17	No sample
18	No sample
19	No sample
20	No sample

AMEC E&I
3500 188th Street SW, Suite 601
Lynnwood, WA 98037
(425) 921-4000
fax (425) 921-4040

Mudmole™ Core Summary Log

Project: Boeing IT
Project No: LY12160140

Station: **SD-514**

Maximum depth of retained sediment: 4.0 ft
Mudline elevation: -0.5 **ft MLLW**
Percent recovery (on-deck): 52%

	Core collection	Laboratory processing
Date:	2/3/2012	2/3/2012
Time:	11:50	13:45

Field Log: Devin O'Reilly
Summary Log: Nik Bacher

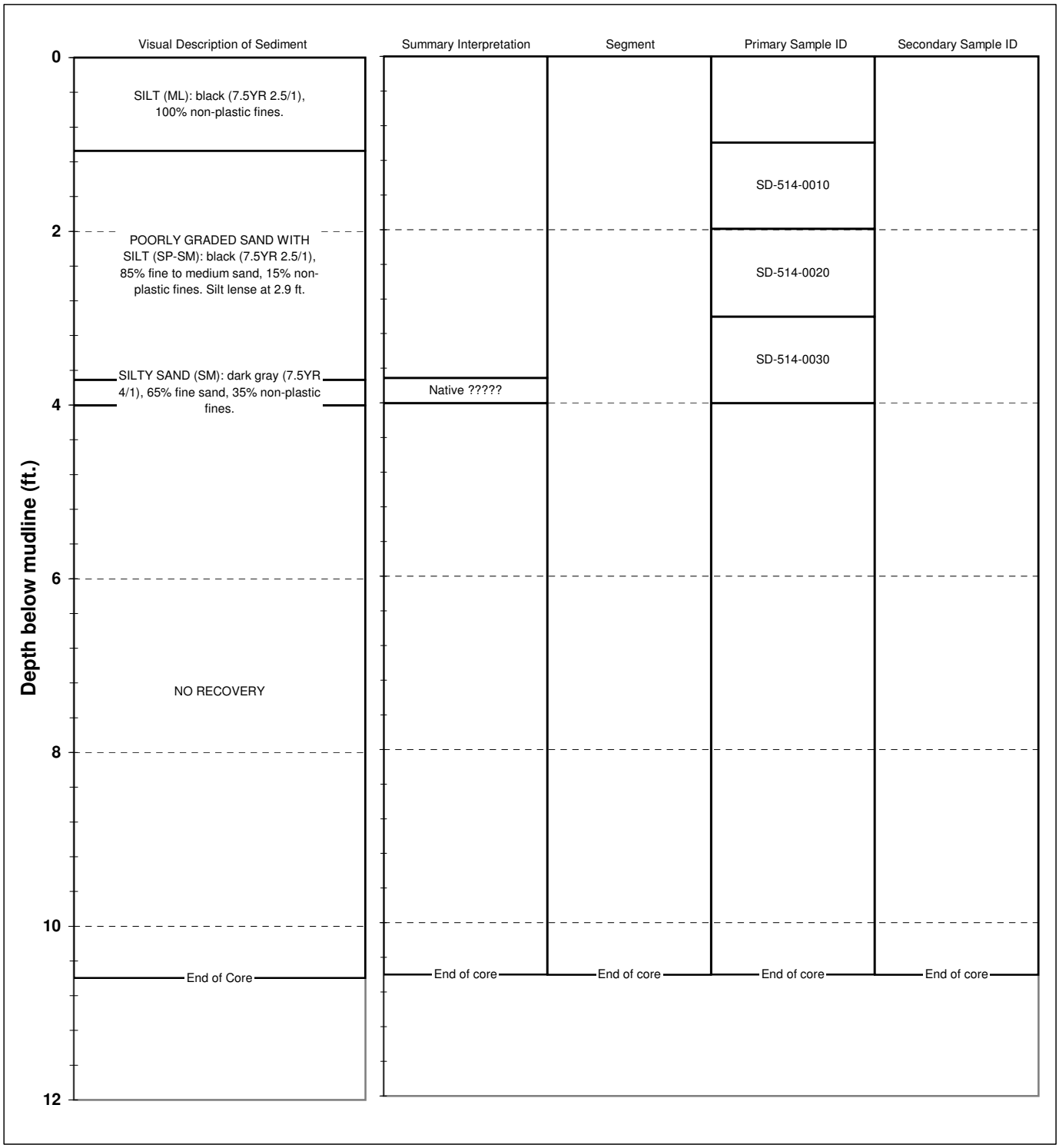

AMEC E&I
3500 188th Street SW, Suite 601
Lynnwood, WA 98037
(425) 921-4000
fax (425) 921-4040

Mudmole™ Bore Log

Project:	Boeing IT	**Station:**	SD-515
Project No:	LY12160140	**Position:**	NAD83 WA N
Collected by:	GSM		194279 Northing
Date:	2/3/2012 **Time:** 8:47		1276153 Easting
Water depth:	18.1 ft **Mudline:** -10.3 ft MLLW		(estimated using tide tables)

Place Field ID Label Here

Weather/Comments: N/A

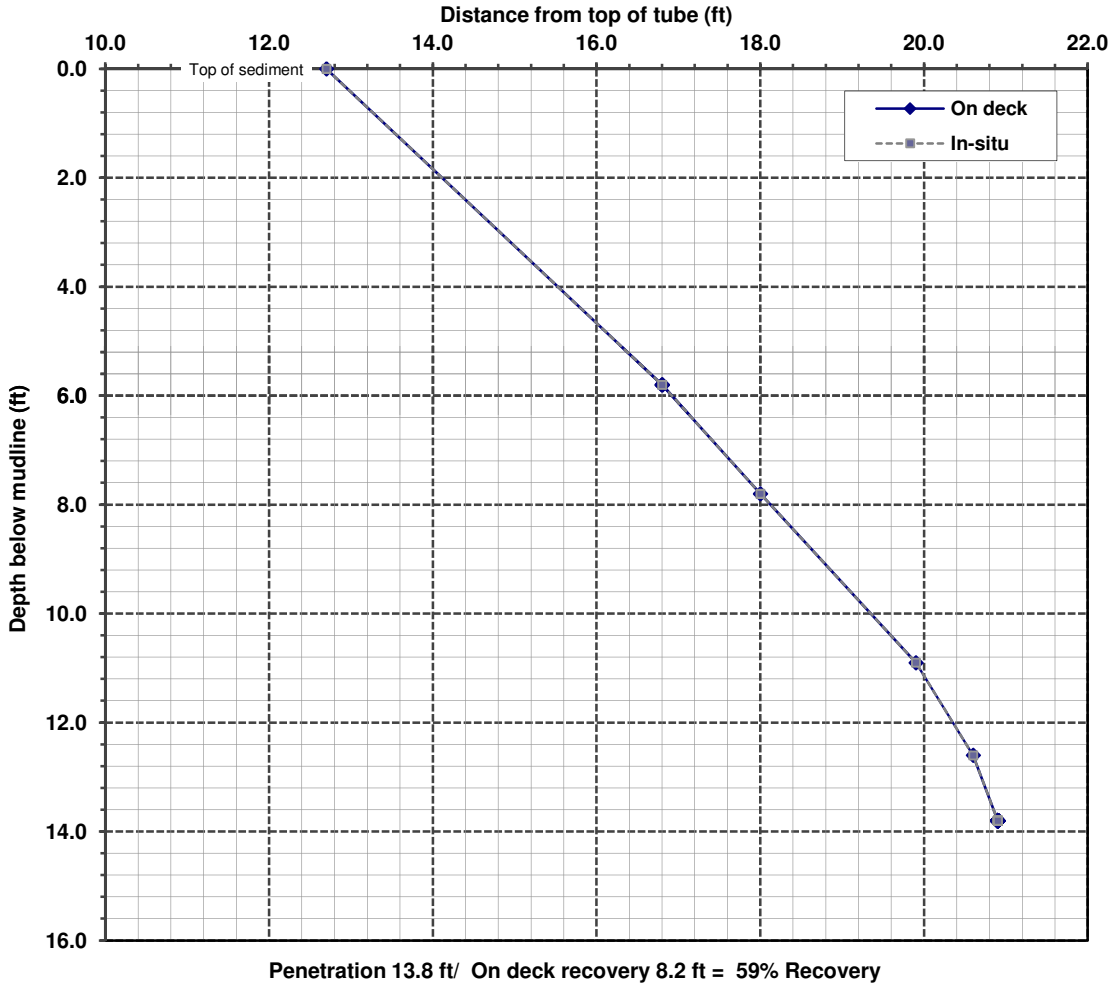

Penetration 13.8 ft/ On deck recovery 8.2 ft = 59% Recovery

Penetration interval (ft)	Interval recovery (ft)	Percent recovery
0-5.8	4.1	71%
5.8-7.8	1.2	60%
7.8-10.9	1.9	61%
10.9-12.6	0.7	41%
12.6-13.8	0.3	25%

Depth below mudline (ft)	Distance from top of tube (ft)
Mudline	12.7
1	13.41
2	14.11
3	14.82
4	15.53
5	16.23
6	16.92
7	17.52
8	18.12
9	18.74
10	19.35
11	19.94
12	20.35
13	20.70
14	No sample
15	No sample
16	No sample
17	No sample
18	No sample
19	No sample
20	No sample

AMEC E&I
3500 188th Street SW, Suite 601
Lynnwood, WA 98037

(425) 921-4000
fax (425) 921-4040

Mudmole™ Core Summary Log

Project: Boeing IT
Project No: LY12160140

Station: SD-515

Maximum depth of retained sediment: 12.0 ft
Mudline elevation: -10.3 **ft MLLW**
Percent recovery (on-deck): 59%

	Core collection	Laboratory processing
Date:	2/3/2012	2/3/2012
Time:	8:47	11:35

Field Log: Devin O'Reilly
Summary Log: Nik Bacher

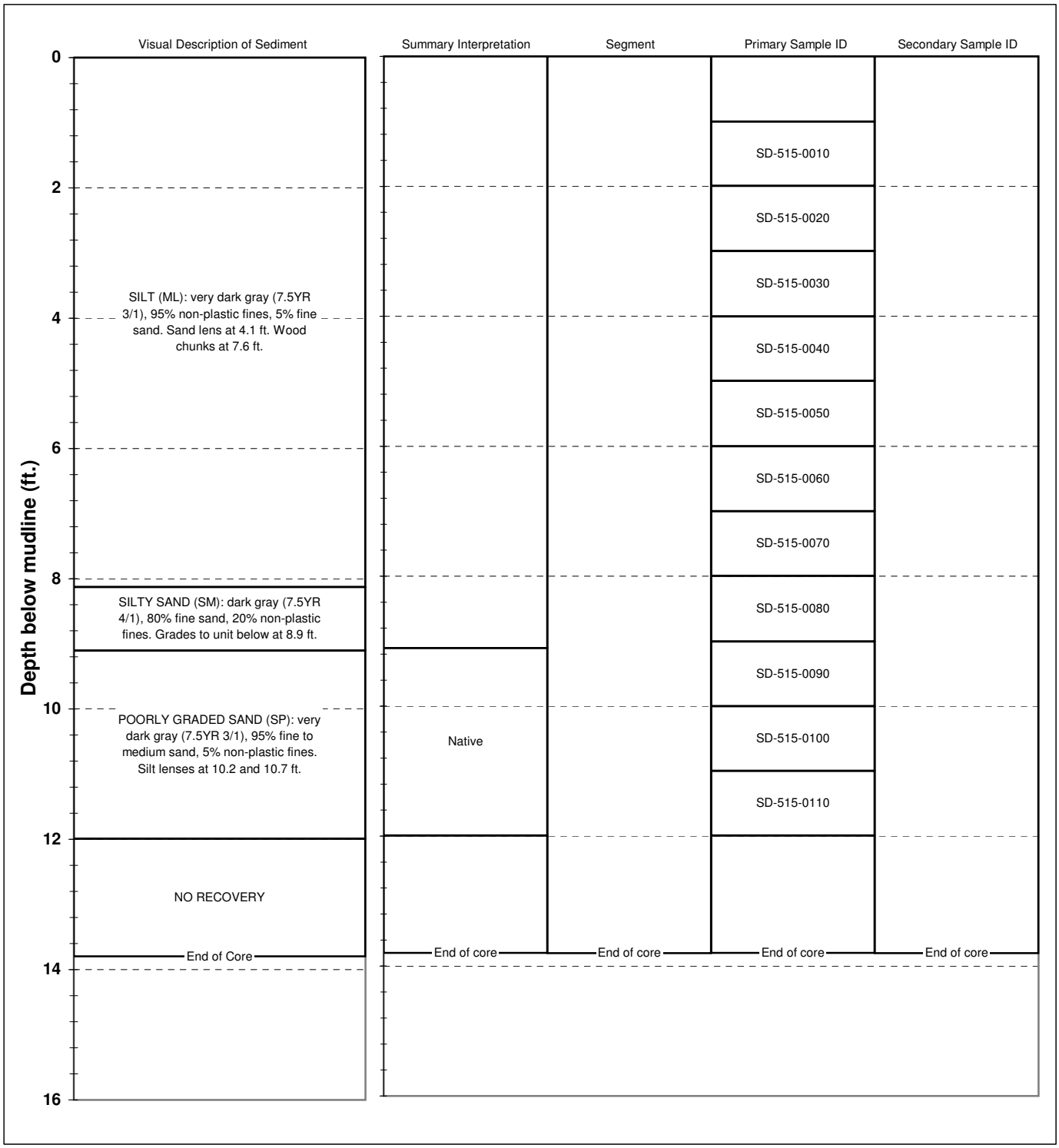

AMEC E&I
3500 188th Street SW, Suite 601
Lynnwood, WA 98037
(425) 921-4000
fax (425) 921-4040

Mudmole™ Bore Log

Project: Boeing IT
Station: SD-516
Project No: LY12160140
Position: NAD83 WA N
Collected by: GSM
194877 Northing
Date: 2/2/2012 **Time:** 9:34
1276006 Easting
Water depth: 20.3 ft **Mudline:** -11.7 ft MLLW (estimated using tide tables)

Place Field ID Label Here

Weather/Comments: N/A

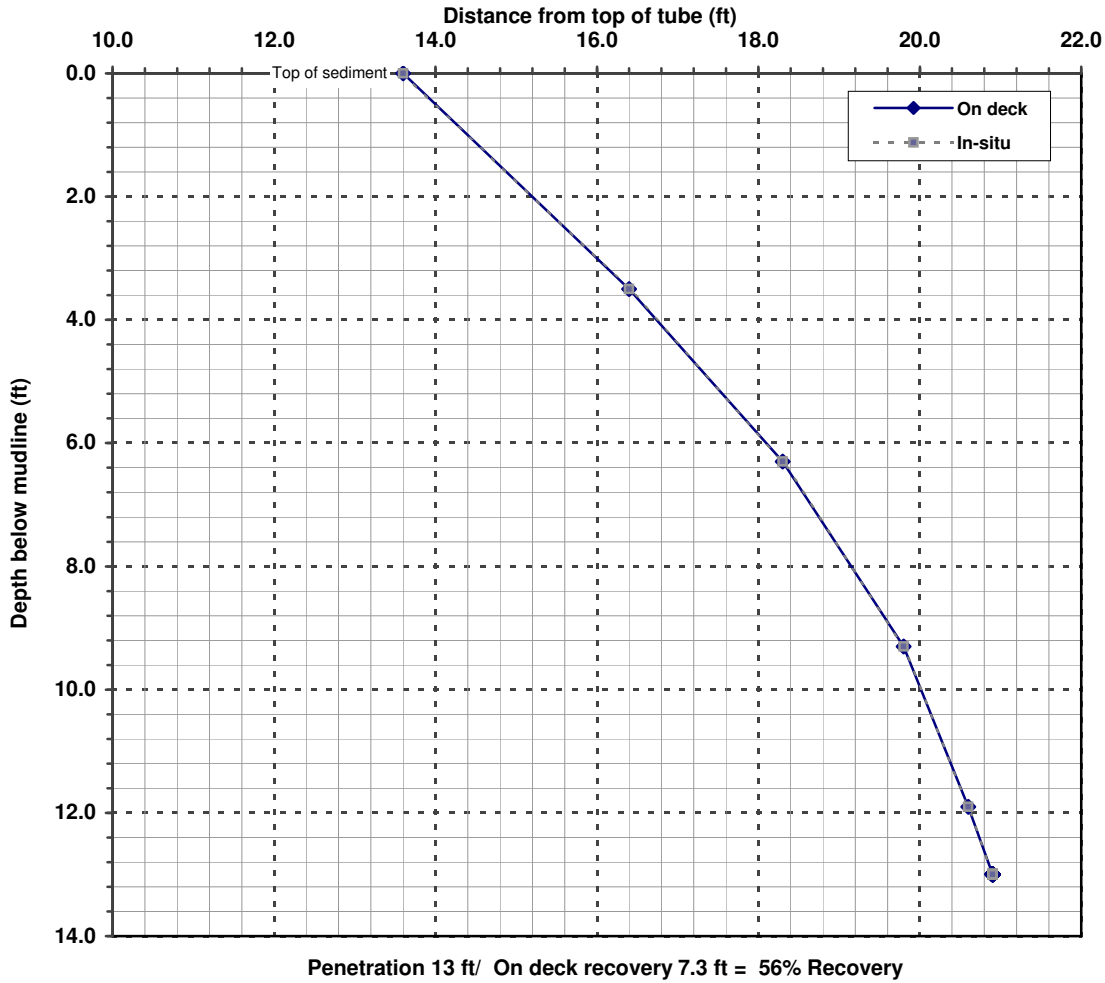

Penetration 13 ft/ On deck recovery 7.3 ft = 56% Recovery

Penetration interval (ft)	Interval recovery (ft)	Percent recovery
0-3.5	2.8	80%
3.5-6.3	1.9	68%
6.3-9.3	1.5	50%
9.3-11.9	0.8	31%
11.9-13	0.3	27%

Depth below mudline (ft)	Distance from top of tube (ft)
Mudline	13.6
1	14.40
2	15.20
3	16.00
4	16.74
5	17.42
6	18.10
7	18.65
8	19.15
9	19.65
10	20.02
11	20.32
12	20.63
13	13.00
14	No sample
15	No sample
16	No sample
17	No sample
18	No sample
19	No sample
20	No sample

AMEC E&I
3500 188th Street SW, Suite 601
Lynnwood, WA 98037
(425) 921-4000
fax (425) 921-4040

Mudmole™ Core Summary Log

Project: Boeing IT
Project No: LY12160140

Station: **SD-516**

Maximum depth of retained sediment: 11.0 ft
Mudline elevation: -11.7 **ft MLLW**
Percent recovery (on-deck): 56%

	Core collection	Laboratory processing
Date:	2/2/2012	2/2/2012
Time:	9:34	15:40

Field Log: Devin O'Reilly
Summary Log: Nik Bacher

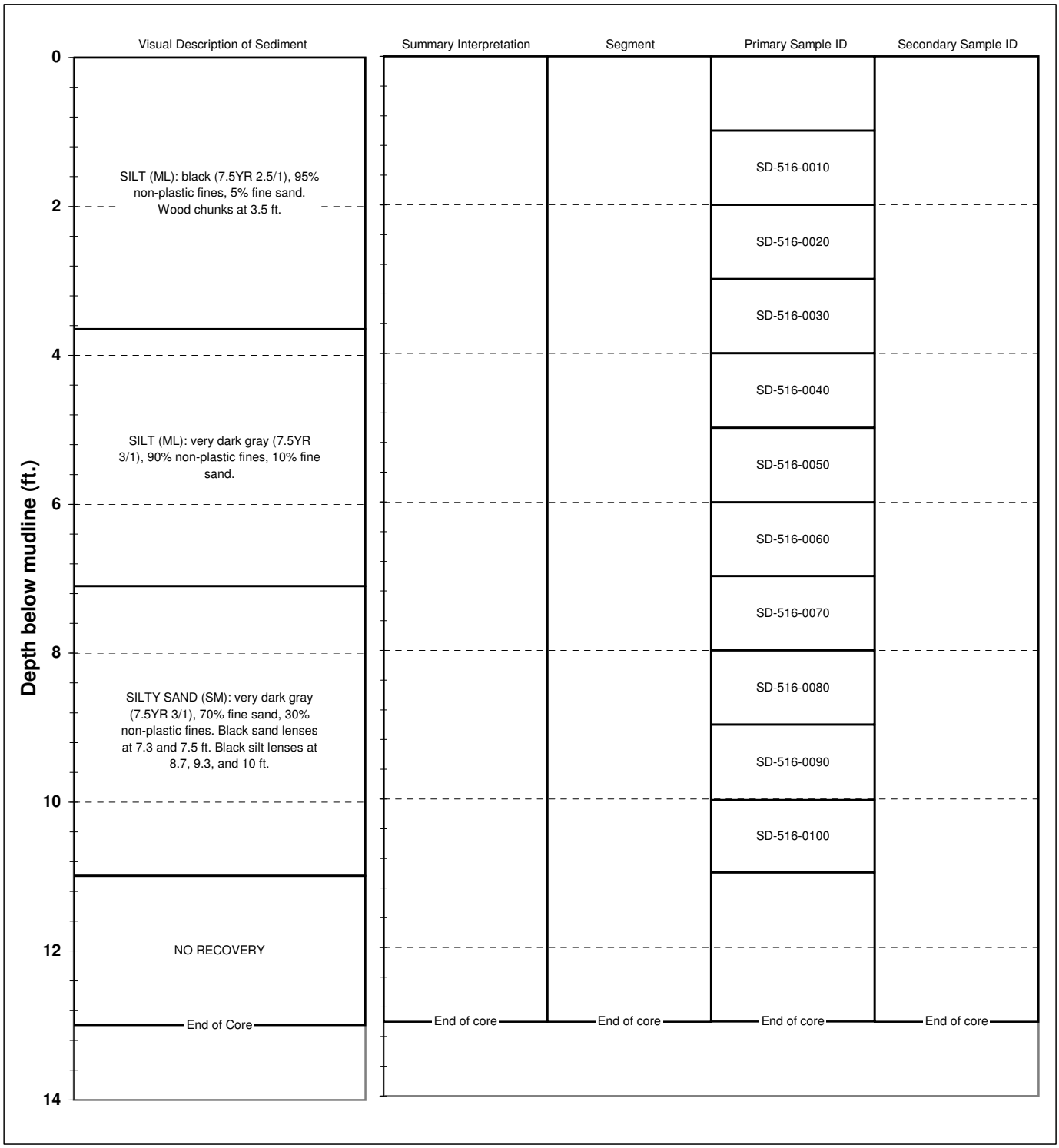

AMEC E&I
3500 188th Street SW, Suite 601
Lynnwood, WA 98037
(425) 921-4000
fax (425) 921-4040

Mudmole™ Bore Log

Project:	Boeing IT	**Station:**	SD-517
Project No:	LY12160140	**Position:**	NAD83 WA N
Collected by:	GSM		194463 Northing
Date:	2/2/2012 **Time:** 13:03		1276180 Easting
Water depth:	8.6 ft **Mudline:** 0.8 ft MLLW		(estimated using tide tables)

Place Field ID Label Here

Weather/Comments: N/A

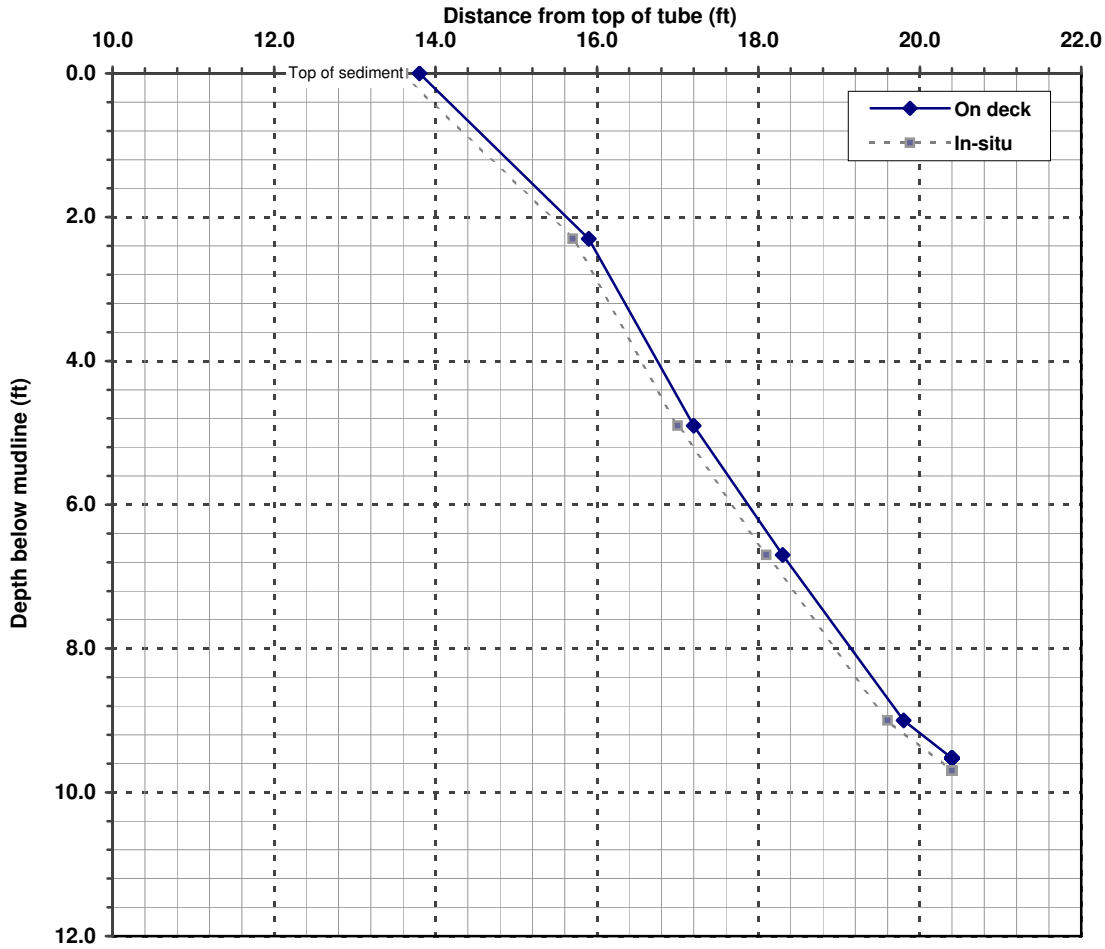

Penetration 9.7 ft/ On deck recovery 6.6 ft = 68% Recovery

Penetration interval (ft)	Interval recovery (ft)	Percent recovery
0-2.3	2.1	91%
2.3-4.9	1.3	50%
4.9-6.7	1.1	61%
6.7-9	1.5	65%
9-9.7	0.8	114%

Depth below mudline (ft)	Distance from top of tube (ft)
Mudline	13.8
1	14.71
2	15.63
3	16.25
4	16.75
5	17.26
6	17.87
7	18.50
8	19.15
9	19.80
10	No sample
11	No sample
12	No sample
13	No sample
14	No sample
15	No sample
16	No sample
17	No sample
18	No sample
19	No sample
20	No sample

AMEC E&I
3500 188th Street SW, Suite 601
Lynnwood, WA 98037

(425) 921-4000
fax (425) 921-4040

Mudmole™ Core Summary Log

Project: Boeing IT
Project No: LY12160140

Station: **SD-517**

Maximum depth of retained sediment: 9.5 ft
Mudline elevation: 0.8 **ft MLLW**
Percent recovery (on-deck): 68%

	Core collection	Laboratory processing
Date:	2/2/2012	2/3/2012
Time:	13:03	9:00

Field Log: Devin O'Reilly
Summary Log: Nik Bacher

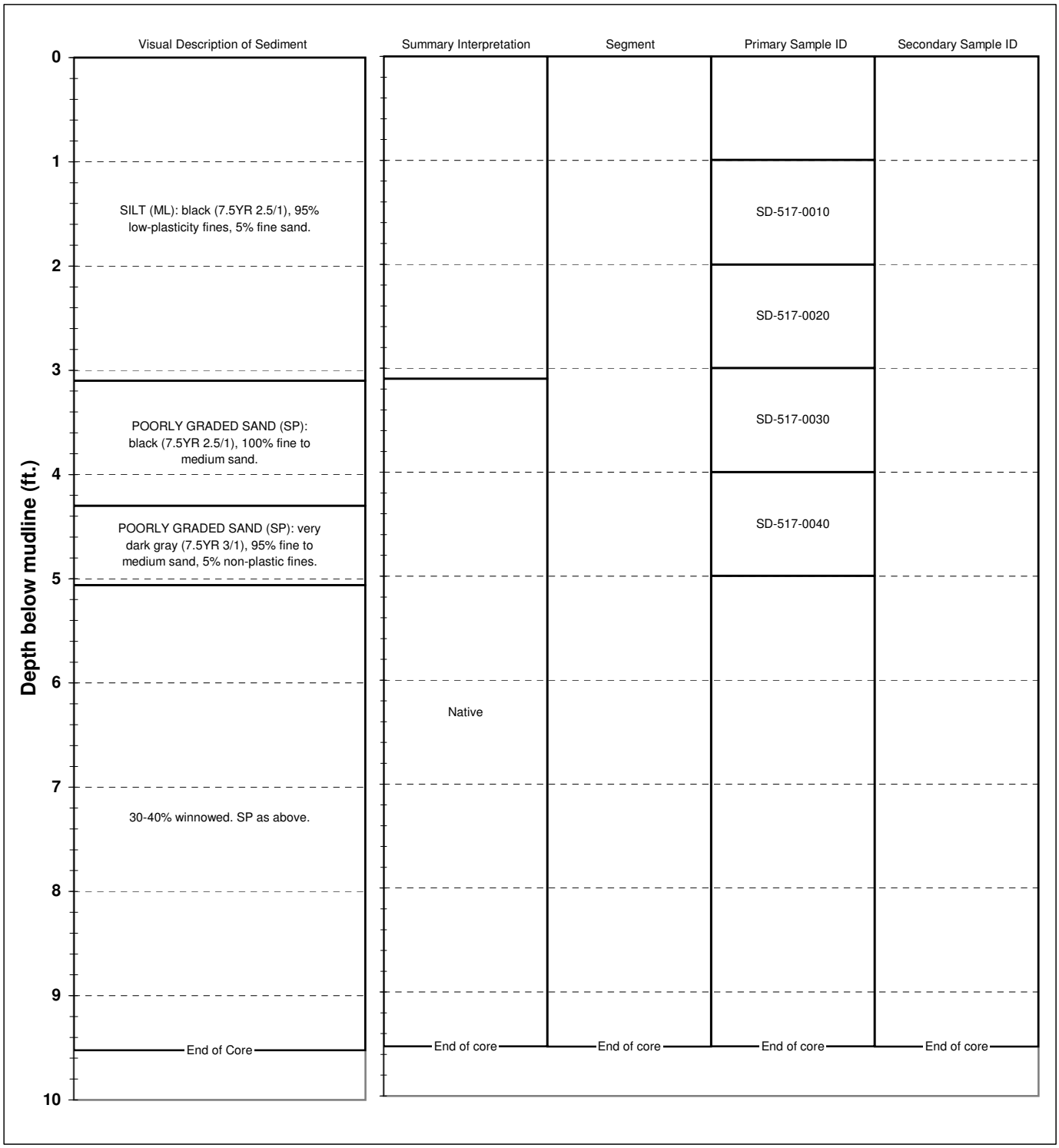

AMEC E&I
3500 188th Street SW, Suite 601
Lynnwood, WA 98037
(425) 921-4000
fax (425) 921-4040

QUALITATIVE SAMPLE CHARACTERISTICS

Coordinate Datum	Date (mm/dd/yy)	Project Location	Sample Identification Number
WA SP 83 US ft	2 / 6 /2012	Boeing IT	SD 501 G

Coordinates		Water Depth					Time
North	East	Depth	Unit		Rep	Gear	
195116	1275941	22.7	f	t	2	0 2 V V	1238

Penetration							
Depth	Unit		Initials	Sulfide	VOA	Weather	Fines (%)
	c	m	GSM			sunny	

Surficial Wood Estimate:

Contact Points _____ X 5 = _____ %

Surficial sediment characteristics:

Biological: Ø % **Debris:** Ø % **Oil Sheen:** None Trace (<5%) _____ %

Moisture
Very Wet Wet Moist Damp Dry

Color **(Circle major & underline modifying)**
Light Medium Dark Olive Gray Brown Black Other _____

Major Constituent **(Circle major & underline modifying)**
Fine Medium Coarse Gravel Sand Silt Clay _____

Minor Constituent with trace
Fine Medium Coarse Gravel Sand Silt Clay _____

Subsurface sediment characteristics:

Density / Consistency

Sand / Gravel - Very Loose Loose Medium Dense Dense Very Dense

Silt / Clay - Very Soft Soft Medium Stiff Stiff Very Stiff Hard

Moisture
Very Wet Wet Moist Damp Dry

Color **(Circle major & underline modifying)**
Light Medium Dark Olive Gray Brown Black Other _____

Major Constituent **(Circle major & underline modifying)**
Fine Medium Coarse Gravel Sand Silt Clay _____

Minor Constituent with trace
Fine Medium Coarse Gravel Sand Silt Clay _____

Biological: Ø % **Debris:** 5 % **Oil Sheen:** None Trace (<5%) _____ %

Comments:
Ø grab did not close

AMEC #LY12100140 Initials: GSM
SD-501G
QSC Form
Date: 2 / 6 /2012 Time: 1238

AMEC, 3500 188th St. SW, Suite 601, Lynnwood, WA 98037, (425) 921-4000

QUALITATIVE SAMPLE CHARACTERISTICS

Coordinate Datum	Date (mm/dd/yy)	Project Location	Sample Identification Number
WA SP 83 US ft	2 / 6 /2012	Boeing IT	SD 502 G

Coordinates		Water Depth					Time
North	East	Depth	Unit		Rep	Gear	
195071	1275997	12.6	f	t	1	0 2 V V	1318

Penetration Depth	Unit		Initials	Sulfide	VOA	Weather	Fines (%)
	c	m	GSM			sunny calm	

Surficial Wood Estimate:

Contact Points _____ X 5 = _____ %

Surficial sediment characteristics: barnacles on rock

Biological: 5 % **Debris:** Ø % **Oil Sheen:** None Trace (<5%) _____ %

Moisture
Very Wet Wet Moist Damp Dry

Color **(Circle major & underline modifying)**
Light Medium Dark Olive Gray Brown Black Other _____

Major Constituent **(Circle major & underline modifying)**
Fine Medium Coarse Gravel Sand Silt Clay _____

Minor Constituent with trace
Fine Medium Coarse Gravel Sand Silt Clay _____

Subsurface sediment characteristics:

Density / Consistency

Sand / Gravel - Very Loose Loose Medium Dense Dense Very Dense

Silt / Clay - Very Soft Soft Medium Stiff Stiff Very Stiff Hard

Moisture
Very Wet Wet Moist Damp Dry

Color **(Circle major & underline modifying)**
Light Medium Dark Olive Gray Brown Black Other orange

Major Constituent **(Circle major & underline modifying)**
Fine Medium Coarse Gravel Sand Silt Clay _____

Minor Constituent with trace
Fine Medium Coarse Gravel Sand Silt Clay _____

Biological: Ø % **Debris:** Ø % **Oil Sheen:** None Trace (<5%) _____ %

Comments:

AMEC #LY12160140 Initials: GSM

SD-502G

QSC Form

Date: 2 / 6 /2012 Time: 1318

AMEC, 3500 188th St. SW, Suite 601, Lynnwood, WA 98037, (425) 921-4000

QUALITATIVE SAMPLE CHARACTERISTICS

Coordinate Datum	Date (mm/dd/yy)	Project Location	Sample Identification Number
W A S P 8 3 U S f t	2 / 6 /2012	Boeing IT	SD 503 G

Coordinates		Water Depth					Time
North	East	Depth	Unit		Rep	Gear	
194998	1275973	21.7	f	t		0 2 V V	1345

Penetration			Sulfide	VOA	Weather	Fines (%)
Depth	Unit	Initials				
	c m	GSM			sunny, H wind	

Surficial Wood Estimate:

Contact Points _____ X 5 = _____ %

Surficial sediment characteristics:

Biological: Ø % **Debris:** 5 wood % **Oil Sheen:** None Trace (<5%) _____ %

Moisture
Very Wet Wet Moist Damp Dry

Color **(Circle major & underline modifying)**
Light Medium Dark Olive Gray Brown Black Other _____

Major Constituent **(Circle major & underline modifying)**
Fine Medium Coarse Gravel Sand Silt Clay _____

Minor Constituent with trace
Fine Medium Coarse Gravel Sand Silt Clay _____

Subsurface sediment characteristics:

Density / Consistency

Sand / Gravel - Very Loose Loose Medium Dense Dense Very Dense

Silt / Clay - Very Soft Soft Medium Stiff Stiff Very Stiff Hard

Moisture
Very Wet Wet Moist Damp Dry

Color **(Circle major & underline modifying)**
Light Medium Dark Olive Gray Brown Black Other _____

Major Constituent **(Circle major & underline modifying)**
Fine Medium Coarse Gravel Sand Silt Clay _____

Minor Constituent with trace
Fine Medium Coarse Gravel Sand Silt Clay _____

Biological: Ø % **Debris:** 5 wood % **Oil Sheen:** None Trace (<5%) _____ %

Comments:

AMEC #LY12160140 Initials: GSM

SD-503G

QSC Form

Date: 2 / 6 /2012 Time: 1345

AMEC, 3500 188th St. SW, Suite 601, Lynnwood, WA 98037, (425) 921-4000

QUALITATIVE SAMPLE CHARACTERISTICS

Coordinate Datum	Date (mm/dd/yy)	Project Location	Sample Identification Number
W A S P 8 3 U S f t	2 / 6 /2012	Boeing IT	SD 504 G

Coordinates		Water Depth					Time
North	East	Depth	Unit	Rep	Gear		
194939 RG	1276024 RG	14.9	f t		0 2 V V		1413

Penetration Depth	Unit	Initials	Sulfide	VOA	Weather	Fines (%)
20	c m				sunny light wind	

Surficial Wood Estimate:

Contact Points _____ X 5 = _____ %

Surficial sediment characteristics:

Biological: 5 % **Debris:** 5% % **Oil Sheen:** None Trace (<5%) _____ %

Moisture
Very Wet Wet Moist Damp Dry

Color **(Circle major & underline modifying)**
Light Medium Dark Olive Gray Brown Black Other _____

Major Constituent **(Circle major & underline modifying)**
Fine Medium Coarse Gravel Sand Silt Clay _____

Minor Constituent with trace
Fine Medium Coarse Gravel Sand Silt Clay _____

Subsurface sediment characteristics:

Density / Consistency

Sand / Gravel - Very Loose Loose Medium Dense Dense Very Dense

Silt / Clay - Very Soft Soft Medium Stiff Stiff Very Stiff Hard

Moisture
Very Wet Wet Moist Damp Dry

Color **(Circle major & underline modifying)**
Light Medium Dark Olive Gray Brown Black Other _____

Major Constituent **(Circle major & underline modifying)**
Fine Medium Coarse Gravel Sand Silt Clay _____

Minor Constituent with trace
Fine Medium Coarse Gravel Sand Silt Clay _____

Biological: Ø % **Debris:** 5% wood % **Oil Sheen:** None Trace (<5%) _____ %

Comments:

AMEC #LY12160140 Initials: GSM
SD-504G
QSC Form
Date: 2 / 6 /2012 Time: 1413

AMEC, 3500 188th St. SW, Suite 601, Lynnwood, WA 98037, (425) 921-4000

QUALITATIVE SAMPLE CHARACTERISTICS

Coordinate Datum	Date (mm/dd/yy)	Project Location	Sample Identification Number
W A S P 8 3 U S f t	2 / 6 /2012	Boeing IT	SD 505 G

Coordinates		Water Depth					Time
North	East	Depth	Unit		Rep	Gear	
194881	1276008	19.8	f	t		0 2 V V	1446

Penetration		Initials	Sulfide	VOA	Weather	Fines (%)
Depth	Unit					
20	c m	GSM			sunny windy	

Surficial Wood Estimate:

Contact Points _____ X 5 = _____ %

Surficial sediment characteristics:

Biological: 5 % **Debris:** Ø % **Oil Sheen:** None Trace (<5%) _____ %

Moisture
Very Wet Wet Moist Damp Dry

Color **(Circle major & underline modifying)**
Light Medium Dark Olive Gray Brown Black Other _____

Major Constituent **(Circle major & underline modifying)**
Fine Medium Coarse Gravel Sand Silt Clay _____

Minor Constituent with trace
Fine Medium Coarse Gravel Sand Silt Clay _____

Subsurface sediment characteristics:

Density / Consistency

Sand / Gravel - Very Loose Loose Medium Dense Dense Very Dense

Silt / Clay - Very Soft Soft Medium Stiff Stiff Very Stiff Hard

Moisture
Very Wet Wet Moist Damp Dry

Color **(Circle major & underline modifying)**
Light Medium Dark Olive Gray Brown Black Other _____

Major Constituent **(Circle major & underline modifying)**
Fine Medium Coarse Gravel Sand Silt Clay _____

Minor Constituent with trace
Fine Medium Coarse Gravel Sand Silt Clay _____

Biological: Ø % **Debris:** 5 wood % **Oil Sheen:** None Trace (<5%) _____ %

Comments:

AMEC #LY12160140 Initials: GSM
SD-505G
QSC Form
Date: 2 / 6 /2012 Time: 1446

Amin\Field Forms\QSC

QUALITATIVE SAMPLE CHARACTERISTICS

Coordinate Datum	Date (mm/dd/yy)	Project Location	Sample Identification Number
W A S P 8 3 U S f t	2 / 7 /2012	Boeing IT	SD 516 G

Coordinates		Water Depth					Time
North	East	Depth	Unit		Rep	Gear	
1948880	1276008	16.9	f	t		0 2 V V	1130

Penetration			Sulfide	VOA	Weather	Fines (%)
Depth	Unit	Initials				
20	c m	GSM			sunny light wind	

Surficial Wood Estimate:

Contact Points _____ X 5 = _____ %

Surficial sediment characteristics:

Biological: 5 % **Debris:** Ø % **Oil Sheen:** None Trace (<5%) _____ %

Moisture
Very Wet Wet Moist Damp Dry

Color **(Circle major & underline modifying)**
Light Medium Dark Olive Gray Brown Black Other _____

Major Constituent **(Circle major & underline modifying)**
Fine Medium Coarse Gravel Sand Silt Clay _____

Minor Constituent with trace
Fine Medium Coarse Gravel Sand Silt Clay _____

Subsurface sediment characteristics:

Density / Consistency

Sand / Gravel - Very Loose Loose Medium Dense Dense Very Dense

Silt / Clay - Very Soft Soft Medium Stiff Stiff Very Stiff Hard

Moisture
Very Wet Wet Moist Damp Dry

Color **(Circle major & underline modifying)**
Light Medium Dark Olive Gray Brown Black Other _____

Major Constituent **(Circle major & underline modifying)**
Fine Medium Coarse Gravel Sand Silt Clay _____

Minor Constituent with trace
Fine Medium Coarse Gravel Sand Silt Clay _____

Biological: Ø % **Debris:** 5 wood % **Oil Sheen:** None Trace (<5%) _____ %

Comments:
attempt 2+3 not logged – grab did not close
834 Rep 2 – grab closed up leadline weight – reject
attempt 4-5 grab did not close – equipt problem

AMEC #LY12160140 Initials: GSM

SD-516G

QSC Form

Date: 2 / 7 /2012 Time: 1130

QUALITATIVE SAMPLE CHARACTERISTICS

Coordinate Datum	Date (mm/dd/yy)	Project Location	Sample Identification Number
W A S P 8 3 U S f t	2 / 7 /2012	Boeing IT	SD 506 G

Coordinates		Water Depth				Time
North	East	Depth	Unit	Rep	Gear	
194 822	127 6073	9.1	f t		0 2 V V	1159

Penetration Depth	Unit	Initials	Sulfide	VOA	Weather	Fines (%)
20	c m	GSM			Sunny - light wind	

Surficial Wood Estimate:

Contact Points _____ X 5 = _____ %

Surficial sediment characteristics:

Biological: 5 % **Debris:** Ø % **Oil Sheen:** None Trace (<5%) ____ %

Moisture
Very Wet Wet Moist Damp Dry

Color **(Circle major & underline modifying)**
Light Medium Dark Olive Gray Brown Black Other Orange

Major Constituent **(Circle major & underline modifying)**
Fine Medium Coarse Gravel Sand Silt Clay

Minor Constituent with trace
Fine Medium Coarse Gravel Sand Silt Clay

Subsurface sediment characteristics:

Density / Consistency

Sand / Gravel - Very Loose Loose Medium Dense Dense Very Dense

Silt / Clay - Very Soft Soft Medium Stiff Stiff Very Stiff Hard

Moisture
Very Wet Wet Moist Damp Dry

Color **(Circle major & underline modifying)**
Light Medium Dark Olive Gray Brown Black Other Orange

Major Constituent **(Circle major & underline modifying)**
Fine Medium Coarse Gravel Sand Silt Clay

Minor Constituent with trace
Fine Medium Coarse Gravel Sand Silt Clay 1.5 ~~20~~% sand gravel

Biological: Ø % **Debris:** 5 wood % **Oil Sheen:** None Trace (<5%) ____ %

Comments:

AMEC #LY12160140 Initials: GSM

SD-506G

QSC Form

Date: 2 / 7 /2012 Time: 1159

AMEC, 3500 188th St. SW, Suite 601, Lynnwood, WA 98037, (425) 921-6000

QUALITATIVE SAMPLE CHARACTERISTICS

Coordinate Datum	Date (mm/dd/yy)	Project Location	Sample Identification Number
W A S P 8 3 U S f t	2 / 7 /2012	Boeing IT	SD 507 G

Coordinates		Water Depth				Time
North	East	Depth	Unit	Rep	Gear	
194757	1276033	18.9	f t		0 2 V V	1221

Penetration Depth	Unit	Initials	Sulfide	VOA	Weather	Fines (%)
20	c m	GSM			sunny light wind	

Surficial Wood Estimate:

Contact Points _____ X 5 = _____ %

Surficial sediment characteristics:

Biological: Ø % **Debris:** Ø % **Oil Sheen:** None Trace (<5%) ____ %

Moisture
Very Wet Wet Moist Damp Dry

Color **(Circle major & underline modifying)**
Light Medium Dark Olive Gray Brown Black Other _____

Major Constituent **(Circle major & underline modifying)**
Fine Medium Coarse Gravel Sand Silt Clay _____

Minor Constituent with trace
Fine Medium Coarse Gravel Sand Silt Clay _____

Subsurface sediment characteristics:

Density / Consistency

Sand / Gravel - Very Loose Loose Medium Dense Dense Very Dense

Silt / Clay - Very Soft Soft Medium Stiff Stiff Very Stiff Hard

Moisture
Very Wet Wet Moist Damp Dry

Color **(Circle major & underline modifying)**
Light Medium Dark Olive Gray Brown Black Other _____

Major Constituent **(Circle major & underline modifying)**
Fine Medium Coarse Gravel Sand Silt Clay _____

Minor Constituent with trace
Fine Medium Coarse Gravel Sand Silt Clay _____

Biological: 5 % **Debris:** 5 wood % **Oil Sheen:** None Trace (<5%) ____ %

Comments:

AMEC #LY12160140 Initials: GSM
SD-507G
QSC Form
Date: 2 / 7 /2012 Time: 1221

Amin\Field Forms\QSC

QUALITATIVE SAMPLE CHARACTERISTICS

Coordinate Datum	Date (mm/dd/yy)	Project Location	Sample Identification Number
WA SP 83 US ft	2 / 7 /2012	Boeing IT	SD 508 G

Coordinates		Water Depth					Time
North	East	Depth	Unit		Rep	Gear	
194703	1276120	10.1	f	t		0 2 V V	1240

Penetration							
Depth	Unit		Initials	Sulfide	VOA	Weather	Fines (%)
20	c	m	GSM			Sunny light wind	

Surficial Wood Estimate:

Contact Points _____ X 5 = _____ %

Surficial sediment characteristics:

Biological: 5 % **Debris:** 5 % **Oil Sheen:** None Trace (<5%) _____ %

Moisture
Very Wet Wet Moist Damp Dry

Color **(Circle major & underline modifying)**
Light Medium Dark Olive Gray Brown Black Other _____

Major Constituent **(Circle major & underline modifying)**
Fine Medium Coarse Gravel Sand Silt Clay _____

Minor Constituent with trace
Fine Medium Coarse Gravel Sand Silt Clay _____

Subsurface sediment characteristics:

Density / Consistency

Sand / Gravel - Very Loose Loose Medium Dense Dense Very Dense

Silt / Clay - Very Soft Soft Medium Stiff Stiff Very Stiff Hard

Moisture
Very Wet Wet Moist Damp Dry

Color **(Circle major & underline modifying)**
Light Medium Dark Olive Gray Brown Black Other _____

Major Constituent **(Circle major & underline modifying)**
Fine Medium Coarse Gravel Sand Silt Clay _____

Minor Constituent with trace
Fine Medium Coarse Gravel Sand Silt Clay _____

Biological: Ø % **Debris:** 5 wood % **Oil Sheen:** None Trace (<5%) _____ %

Comments:

AMEC #LY12160140

SD-508G

QSC Form

Initials: GSM

Date: 2 / 7 /2012 Time: 1240

AMEC, 3500 188th St. SW, Suite 601, Lynnwood, WA 98037, (425) 921-4000

QUALITATIVE SAMPLE CHARACTERISTICS

Coordinate Datum	Date (mm/dd/yy)	Project Location	Sample Identification Number
W A S P 8 3 U S f t	2 / 7 /2012	Boeing IT	SD 509 G

Coordinates		Water Depth					Time
North	East	Depth	Unit	Rep	Gear		
194641	1276063	19.6	f t		0 2 V V		1305

Penetration Depth	Unit	Initials	Sulfide	VOA	Weather	Fines (%)
20	c m	GVM			Sunny light wind	

Surficial Wood Estimate:

Contact Points _____ X 5 = _____ %

Surficial sediment characteristics:

Biological: 5 % **Debris:** Ø % **Oil Sheen:** None Trace (<5%) ____ %

Moisture
Very Wet Wet Moist Damp Dry

Color **(Circle major & underline modifying)**
Light Medium Dark Olive Gray Brown Black Other _____

Major Constituent **(Circle major & underline modifying)**
Fine Medium Coarse Gravel Sand Silt Clay _____

Minor Constituent with trace
Fine Medium Coarse Gravel Sand Silt Clay _____

Subsurface sediment characteristics:

Density / Consistency

Sand / Gravel - Very Loose Loose Medium Dense Dense Very Dense

Silt / Clay - Very Soft Soft Medium Stiff Stiff Very Stiff Hard

Moisture
Very Wet Wet Moist Damp Dry

Color **(Circle major & underline modifying)**
Light Medium Dark Olive Gray Brown Black Other _____

Major Constituent **(Circle major & underline modifying)**
Fine Medium Coarse Gravel Sand Silt Clay _____

Minor Constituent with trace
Fine Medium Coarse Gravel Sand Silt Clay _____

Biological: Ø % **Debris:** 15 twigs leaves % **Oil Sheen:** None Trace (<5%) ____ %

Comments:

AMEC #LY12160140 Initials: GSM

SD-509G

QSC Form

Date: 2 / 7 /2012 Time: 1305

Amin\Field Forms\QSC

QUALITATIVE SAMPLE CHARACTERISTICS

Coordinate Datum	Date (mm/dd/yy)	Project Location	Sample Identification Number
W A S P 8 3 U S f t	2 / 7 /2012	Boeing IT	SD 510 G

Coordinates		Water Depth					Time
North	East	Depth	Unit		Rep	Gear	
194 582	127 6147	8.9	f	t		0 2 V V	1333

Penetration Depth	Unit		Initials	Sulfide	VOA	Weather	Fines (%)
29	c	m	GSM			sunny light wind	

Surficial Wood Estimate:

Contact Points _____ X 5 = _____ %

Surficial sediment characteristics:

Biological: Ø % **Debris:** Ø % **Oil Sheen:** None Trace (<5%) _____ %

Moisture
Very Wet Wet Moist Damp Dry

Color **(Circle major & underline modifying)**
Light Medium Dark Olive Gray Brown Black Other _____

Major Constituent **(Circle major & underline modifying)**
Fine Medium Coarse Gravel Sand Silt Clay _____

Minor Constituent with trace
Fine Medium Coarse Gravel Sand Silt Clay _____

Subsurface sediment characteristics:

Density / Consistency

Sand / Gravel - Very Loose Loose Medium Dense Dense Very Dense

Silt / Clay - Very Soft Soft Medium Stiff Stiff Very Stiff Hard

Moisture
Very Wet Wet Moist Damp Dry

Color **(Circle major & underline modifying)**
Light Medium Dark Olive Gray Brown Black Other _____

Major Constituent **(Circle major & underline modifying)**
Fine Medium Coarse Gravel Sand Silt Clay _____

Minor Constituent with trace
Fine Medium Coarse Gravel Sand Silt Clay _____

Biological: _____ % **Debris:** _____ % **Oil Sheen:** None Trace (<5%) _____ %

Comments:

AMEC #LY12160140
SD-510G
QSC Form
Date: 2 / 7 /2012 Time: 1333

Initials: GSM

Amin\Field Forms\QSC

QUALITATIVE SAMPLE CHARACTERISTICS

Coordinate Datum	Date (mm/dd/yy)	Project Location	Sample Identification Number
WA SP 83 US ft	2 / 7 /2012	Boeing IT	SD 511 G

Coordinates		Water Depth					Time
North	East	Depth	Unit	Rep	Gear		
194520	1276088	20.7	f t		0 2 V V		1353

Penetration Depth	Unit	Initials	Sulfide	VOA	Weather	Fines (%)
20	c m	GSM			sunny light wind	

Surficial Wood Estimate:

Contact Points _____ X 5 = _____ %

Surficial sediment characteristics:

Biological: 5 % **Debris:** 0 % **Oil Sheen:** None Trace (<5%) _____ %

Moisture
Very Wet Wet Moist Damp Dry

Color **(Circle major & underline modifying)**
Light Medium Dark Olive Gray Brown Black Other _____

Major Constituent **(Circle major & underline modifying)**
Fine Medium Coarse Gravel Sand Silt Clay _____

Minor Constituent with trace
Fine Medium Coarse Gravel Sand Silt Clay _____

Subsurface sediment characteristics:

Density / Consistency

Sand / Gravel - Very Loose Loose Medium Dense Dense Very Dense

Silt / Clay - Very Soft Soft Medium Stiff Stiff Very Stiff Hard

Moisture
Very Wet Wet Moist Damp Dry

Color **(Circle major & underline modifying)**
Light Medium Dark Olive Gray Brown Black Other _____

Major Constituent **(Circle major & underline modifying)**
Fine Medium Coarse Gravel Sand Silt Clay _____

Minor Constituent with trace
Fine Medium Coarse Gravel Sand Silt Clay _____

Biological: _____ % **Debris:** 5 wood % **Oil Sheen:** None Trace (<5%) _____ %

Comments:

AMEC #LY12160140
SD-511G
QSC Form
Initials: GSM
Date: 2 / 7 /2012 Time: 1353

AMEC, 3500 188th St. SW, Suite 601, Lynnwood, WA 98037, (425) 921-4000

QUALITATIVE SAMPLE CHARACTERISTICS

Coordinate Datum	Date (mm/dd/yy)	Project Location	Sample Identification Number
W A S P 8 3 U S f t	2 / 7 /2012	Boeing IT	SD 512 G

Coordinates		Water Depth					Time
North	East	Depth	Unit		Rep	Gear	
194461	1276181	10.1	f	t		0 2 V V	1411

Penetration			Sulfide	VOA	Weather	Fines (%)
Depth	Unit	Initials				
20	c m	GSM			p cloudy calm	

Surficial Wood Estimate:

Contact Points _____ X 5 = _____ %

Surficial sediment characteristics:

Biological: 5 (clams) % **Debris:** Ø % **Oil Sheen:** None Trace (<5%) _____ %

Moisture
Very Wet Wet Moist Damp Dry

Color **(Circle major & underline modifying)**
Light Medium Dark Olive Gray Brown Black Other _____

Major Constituent **(Circle major & underline modifying)**
Fine Medium Coarse Gravel Sand Silt Clay _____

Minor Constituent with trace
Fine Medium Coarse Gravel Sand Silt Clay _____

Subsurface sediment characteristics:

Density / Consistency

Sand / Gravel - Very Loose Loose Medium Dense Dense Very Dense

Silt / Clay - Very Soft Soft Medium Stiff Stiff Very Stiff Hard

Moisture
Very Wet Wet Moist Damp Dry

Color **(Circle major & underline modifying)**
Light Medium Dark Olive Gray Brown Black Other _____

Major Constituent **(Circle major & underline modifying)**
Fine Medium Coarse Gravel Sand Silt Clay _____

Minor Constituent with trace
Fine Medium Coarse Gravel Sand Silt Clay _____

Biological: 5 (clams) % **Debris:** 5 (wood) % **Oil Sheen:** None Trace (<5%) _____ %

Comments:

AMEC #LY12160140 Initials: GSM
SD-512G
QSC Form
Date: 2 / 7 /2012 Time: 1411

AMEC, 3500 188th St. SW, Suite 601, Lynnwood, WA 98037, (425) 921-4000

QUALITATIVE SAMPLE CHARACTERISTICS

Coordinate Datum	Date (mm/dd/yy)	Project Location	Sample Identification Number
W A S P 8 3 U S f t	2 / 7 /2012	Boeing IT	SD 517

Coordinates		Water Depth					Time
North	East	Depth	Unit	Rep	Gear		
194463	1276182	10.0	f t		0 2 V V		1429

Penetration Depth	Unit	Initials	Sulfide	VOA	Weather	Fines (%)
20	c m	GSM			p cloudy calm	

Surficial Wood Estimate:

Contact Points _____ X 5 = _____ %

Surficial sediment characteristics:

Biological: Ø % **Debris:** Ø % **Oil Sheen:** None Trace (<5%) _____ %

Moisture
Very Wet Wet Moist Damp Dry

Color **(Circle major & underline modifying)**
Light Medium Dark Olive Gray Brown Black Other _____

Major Constituent **(Circle major & underline modifying)**
Fine Medium Coarse Gravel Sand Silt Clay _____

Minor Constituent with trace
Fine Medium Coarse Gravel Sand Silt Clay _____

Subsurface sediment characteristics:

Density / Consistency

Sand / Gravel - Very Loose Loose Medium Dense Dense Very Dense

Silt / Clay - Very Soft Soft Medium Stiff Stiff Very Stiff Hard

Moisture
Very Wet Wet Moist Damp Dry

Color **(Circle major & underline modifying)**
Light Medium Dark Olive Gray Brown Black Other _____

Major Constituent **(Circle major & underline modifying)**
Fine Medium Coarse Gravel Sand Silt Clay _____

Minor Constituent with trace
Fine Medium Coarse Gravel Sand Silt Clay _____

Biological: _____ % **Debris:** 5 (wood) % **Oil Sheen:** None Trace (<5%) _____ %

Comments:

AMEC #LY12160140 Initials: GSM

SD-517G

QSC Form

Date: 2 / 7 /2012 Time: 1429

Amin\Field Forms\QSC

QUALITATIVE SAMPLE CHARACTERISTICS

Coordinate Datum	Date (mm/dd/yy)	Project Location	Sample Identification Number
W A S P 8 3 U S f t	2 / 7 /2012	Boeing IT	SD 513 G

Coordinates		Water Depth					Time
North	East	Depth	Unit		Rep	Gear	
194402	1276126	18.9	f	t		0 2 V V	1448

Penetration			Sulfide	VOA	Weather	Fines (%)
Depth	Unit	Initials				
20	c m	GSM			p cloudy calm	

Surficial Wood Estimate:

Contact Points _____ X 5 = _____ %

Surficial sediment characteristics:

Biological: Ø % **Debris:** Ø % **Oil Sheen:** None Trace (<5%) _____ %

Moisture
Very Wet Wet Moist Damp Dry

Color **(Circle major & underline modifying)**
Light Medium Dark Olive Gray Brown Black Other _____

Major Constituent **(Circle major & underline modifying)**
Fine Medium Coarse Gravel Sand Silt Clay

Minor Constituent with trace
Fine Medium Coarse Gravel Sand Silt Clay _____

Subsurface sediment characteristics:

Density / Consistency

Sand / Gravel - Very Loose Loose Medium Dense Dense Very Dense

Silt / Clay - Very Soft Soft Medium Stiff Stiff Very Stiff Hard

Moisture
Very Wet Wet Moist Damp Dry

Color **(Circle major & underline modifying)**
Light Medium Dark Olive Gray Brown Black Other _____

Major Constituent **(Circle major & underline modifying)**
Fine Medium Coarse Gravel Sand Silt Clay _____

Minor Constituent with trace
Fine Medium Coarse Gravel Sand Silt Clay _____

Biological: Ø % **Debris:** 5 (twigs) % **Oil Sheen:** None Trace (<5%) _____ %

Comments:

AMEC #LY12160140
SD-513G
QSC Form
Initials: GSM
Date: 2 / 7 /2012 Time: 1448

AMEC, 3500 188th St. SW, Suite 601, Lynnwood, WA 98037, (425) 921-4000

QUALITATIVE SAMPLE CHARACTERISTICS

Coordinate Datum	Date (mm/dd/yy)	Project Location	Sample Identification Number
WA SP 83 US ft	2 / 7 /2012	Boeing IT	SD 514 G

Coordinates		Water Depth					Time
North	East	Depth	Unit		Rep	Gear	
194346	1276210	12.1	f	t		02VV	1511

Penetration			Sulfide	VOA	Weather	Fines (%)
Depth	Unit	Initials				
20	c m	GSM			pc cloudy light wind	

Surficial Wood Estimate:

Contact Points _____ X 5 = _____ %

Surficial sediment characteristics:

Biological: Ø % **Debris:** Ø % **Oil Sheen:** None Trace (<5%) ____ %

Moisture
Very Wet Wet Moist Damp Dry

Color **(Circle major & underline modifying)**
Light Medium Dark Olive Gray Brown Black Other _____

Major Constituent **(Circle major & underline modifying)**
Fine Medium Coarse Gravel Sand Silt Clay _____

Minor Constituent with trace
Fine Medium Coarse Gravel Sand Silt Clay _____

Subsurface sediment characteristics:

Density / Consistency

Sand / Gravel - Very Loose Loose Medium Dense Dense Very Dense

Silt / Clay - Very Soft Soft Medium Stiff Stiff Very Stiff Hard

Moisture
Very Wet Wet Moist Damp Dry

Color **(Circle major & underline modifying)**
Light Medium Dark Olive Gray Brown Black Other _____

Major Constituent **(Circle major & underline modifying)**
Fine Medium Coarse Gravel Sand Silt Clay _____

Minor Constituent with trace
Fine Medium Coarse Gravel Sand Silt Clay _____

Biological: Ø % **Debris:** Ø % **Oil Sheen:** None Trace (<5%) ____ %

Comments:

AMEC #LY12160140 Initials: GSM
SD-514G
QSC Form
Date: 2 / 7 /2012 Time: 1511

AMEC, 3500 188th St. SW, Suite 601, Lynnwood, WA 98037, (425) 921-4000

QUALITATIVE SAMPLE CHARACTERISTICS

Coordinate Datum	Date (mm/dd/yy)	Project Location	Sample Identification Number
W A S P 8 3 U S f t	2 / 7 /2012	Boeing IT	SD 515 G

Coordinates		Water Depth					Time
North	East	Depth	Unit	Rep	Gear		
194 276	1276149	21.6	f t		0 2 V V		1533

Penetration Depth	Unit	Initials	Sulfide	VOA	Weather	Fines (%)
20	c m	GSM			8 cloudy calm	

Surficial Wood Estimate:

Contact Points _____ X 5 = _____ %

Surficial sediment characteristics:

Biological: 5 % **Debris:** 5 (wood) % **Oil Sheen:** None Trace (<5%) _____ %

Moisture
Very Wet Wet Moist Damp Dry

Color **(Circle major & underline modifying)**
Light Medium Dark Olive Gray Brown Black Other _____

Major Constituent **(Circle major & underline modifying)**
Fine Medium Coarse Gravel Sand Silt Clay _____

Minor Constituent with trace
Fine Medium Coarse Gravel Sand Silt Clay _____

Subsurface sediment characteristics:

Density / Consistency

Sand / Gravel - Very Loose Loose Medium Dense Dense Very Dense

Silt / Clay - Very Soft Soft Medium Stiff Stiff Very Stiff Hard

Moisture
Very Wet Wet Moist Damp Dry

Color **(Circle major & underline modifying)**
Light Medium Dark Olive Gray Brown Black Other _____

Major Constituent **(Circle major & underline modifying)**
Fine Medium Coarse Gravel Sand Silt Clay _____

Minor Constituent with trace
Fine Medium Coarse Gravel Sand Silt Clay _____

Biological: _____ % **Debris:** 5 (wood) % **Oil Sheen:** None Trace (<5%) _____ %

Comments:

AMEC #LY12160140
SD-515G
QSC Form
Date: 2 / 7 /2012 Time: 1533

Initials: GSM

AMEC, 3500 188th St. SW, Suite 601, Lynnwood, WA 98037, (425) 921-4000

APPENDIX F

Port Property Investigation Data

G:\Projects\025\190\213\013\RI\FigureF1.mxd 12/20/2013 NAD 1983 HARN StatePlane Washington North FIPS 4601 Feet

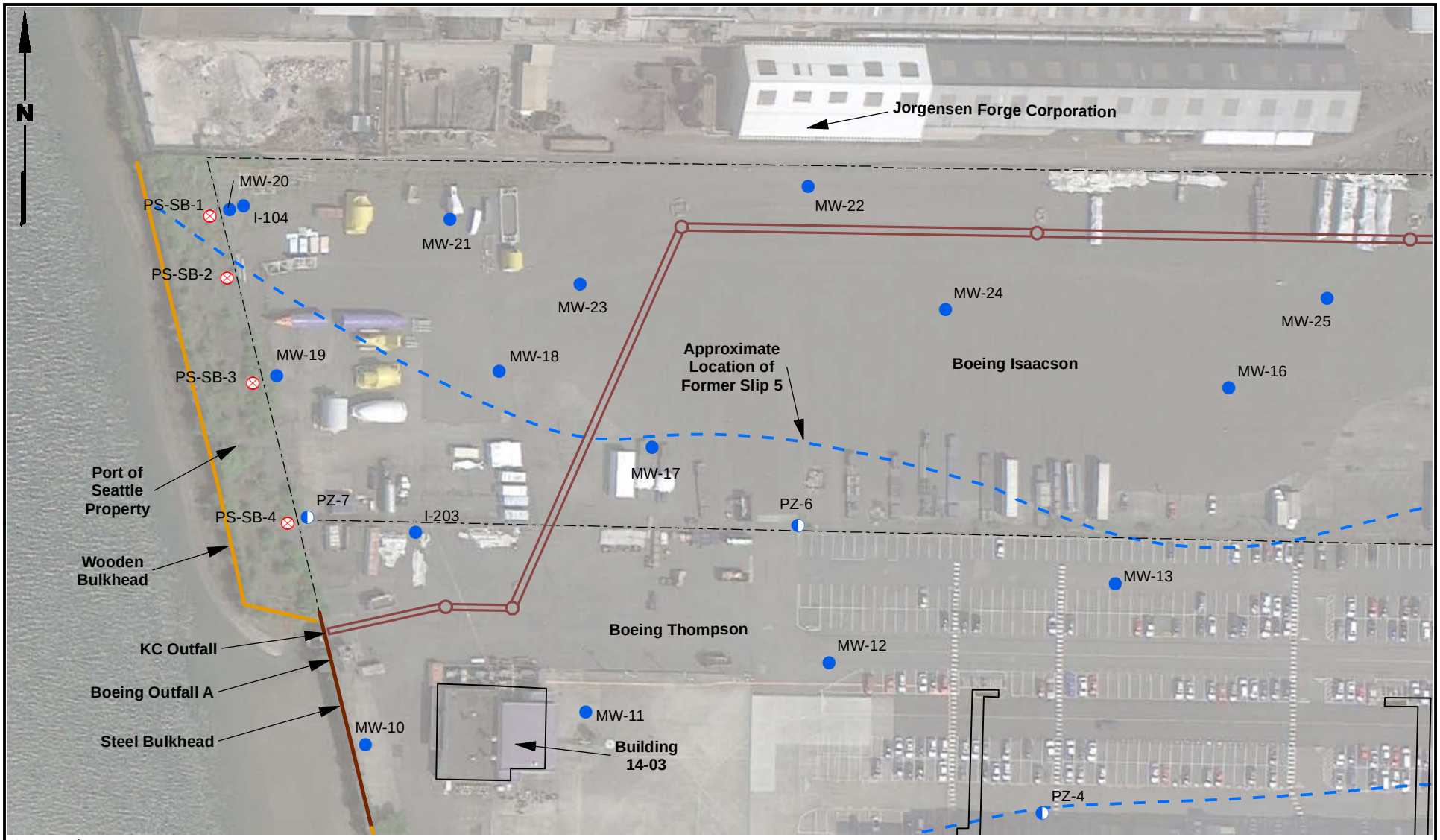

Legend

- Soil and Groundwater Sampling Locations
- Existing LAI Monitoring Location
- Existing LAI Piezometer Location

0 110 220

Scale in Feet

Data Sources: Google Earth Pro, 2012; King County Parcel Data.

LANDAU ASSOCIATES

Boeing Isaacson-Thompson Port Property Investigation Tukwila, Washington	**Soil and Groundwater Sampling Locations**	Figure F-1

TABLE F-1
GROUNDWATER ANALYTICAL RESULTS
PORT OF SEATTLE PROPERTY INVESTIGATION (a)
TUKWILA, WASHINGTON

Sample Identification:		PS-SB1a-GW			PS-SB2-GW			PS-SB3-GW			PS-SB4-GW			PS-SB5-GW/Duplicate of PS-SB-4-GW		
Laboratory Sample Identification:	Preliminary	6769564 / 6769565			6769566 / 6769567			6769568 / 6769569			6769570 / 6769571			6769572 / 6769573		
Laboratory Data Package Identification:	Cleanup	1331745			1331745			1331745			1331745			1331745		
Sample Collection Date:	Levels	08/27/2012			08/27/2012			08/27/2012			08/27/2012			08/27/2012		
		Result	Reporting Limit	Detection Limit	Result	Reporting Limit	Detection Limit	Result	Reporting Limit	Detection Limit	Result	Reporting Limit	Detection Limit	Result	Reporting Limit	Detection Limit
TOTAL METALS (µg/L)																
Method EPA 200.8/7470A																
Antimony	---	**0.43** J1	1.0	0.33	**16.3**	1.0	0.33	**0.47** J1	1.0	0.33	**3.7**	1.0	0.33	**3.1**	1.0	0.33
Arsenic	---	**481**	2.0	0.40	**4770**	20.0	4.0	**637**	2.0	0.40	**6.6** J	2.0	0.40	**3.9** J	2.0	0.40
Barium	---	**14.0**	2.0	0.41	**9.2**	2.0	0.41	**25.2**	2.0	0.41	**167**	2.0	0.41	**159**	2.0	0.41
Beryllium	---	**0.032** J1	0.50	0.025	0.025 U	0.50	0.025	**0.071** J1	0.50	0.025	**0.054** J1	0.50	0.025	0.025 U	0.50	0.025
Cadmium	---	0.082 U	0.50	0.082	0.082 U	0.50	0.082	0.082 U	0.50	0.082	**0.56**	0.50	0.082	**0.27** J1	0.50	0.082
Chromium	---	**2.9**	2.0	0.50	**0.73** J1	2.0	0.50	**3.4**	2.0	0.50	**40.2** J	2.0	0.50	**16.2** J	2.0	0.50
Copper	---	**5.0**	2.0	0.40	**10.8**	2.0	0.40	**4.6**	2.0	0.40	**37.2** J	2.0	0.40	**18.5** J	2.0	0.40
Lead	---	**0.66** J1	1.0	0.034	**0.33** J1	1.0	0.034	**1.4**	1.0	0.034	**83.0** J	1.0	0.034	**42.2** J	1.0	0.034
Mercury	0.012	0.070 U	0.20	0.070	0.070 U	0.20	0.070	0.070 U	0.20	0.070	0.070 U	0.20	0.070	0.070 U	0.20	0.070
Nickel	---	**0.56** J1	2.0	0.35	**1.7** J1	2.0	0.35	**1.2** J1	2.0	0.35	**23.5** J	2.0	0.35	**13.1** J	2.0	0.35
Selenium	---	0.50 U	2.0	0.50	**3.8**	2.0	0.50	0.50 U	2.0	0.50	0.50 U	2.0	0.50	0.50 U	2.0	0.50
Silver	---	0.10 U	0.50	0.10	0.10 U	0.50	0.10	0.10 U	0.50	0.10	**0.20** J1	0.50	0.10	0.10 U	0.50	0.10
Thallium	---	0.15 U	0.50	0.15	0.15 U	0.50	0.15	0.15 U	0.50	0.15	0.15 U	0.50	0.15	0.15 U	0.50	0.15
Zinc	---	5.6 UJ2	15.0	1.1	**13.2** J1	15.0	1.1	**11.3** J1	15.0	1.1	**104** J	15.0	1.1	**49.1** J	15.0	1.1
DISSOLVED METALS (µg/L)																
Method EPA 200.8/7470A																
Antimony	150	**0.59** J1	1.0	0.33	**16.0**	1.0	0.33	**0.55** J1	1.0	0.33	**2.5**	1.0	0.33	**3.5**	1.0	0.33
Arsenic	8	**328**	2.0	0.40	**5090**	20.0	4.0	**656**	2.0	0.40	**1.8** J1	2.0	0.40	**1.5** J1	2.0	0.40
Barium	770	**6.5**	2.0	0.41	**7.4**	2.0	0.41	**22.1**	2.0	0.41	**158**	2.0	0.41	**190**	2.0	0.41
Beryllium	12	0.025 U	0.50	0.025	0.025 U	0.50	0.025	**0.033** J1	0.50	0.025	0.025 U	0.50	0.025	0.025 U	0.50	0.025
Cadmium	0.25	0.082 U	0.50	0.082	0.082 U	0.50	0.082	0.082 U	0.50	0.082	0.082 U	0.50	0.082	0.082 U	0.50	0.082
Chromium	74	**0.56** J1	2.0	0.50	0.50 U	2.0	0.50	**1.2** J1	2.0	0.50	**0.88** J1	2.0	0.50	**0.71** J1	2.0	0.50
Copper	8	**1.1** J1	2.0	0.40	**4.5**	2.0	0.40	0.40 U	2.0	0.40	**0.57** J1	2.0	0.40	**0.53** J1	2.0	0.40
Lead	2.5	0.034 U	1.0	0.034	**0.077** J1	1.0	0.034	0.034 U	1.0	0.034	**0.048** J1	1.0	0.034	**0.34** J1	1.0	0.034
Mercury	0.012	0.070 U	0.20	0.070	0.070 U	0.20	0.070	0.070 U	0.20	0.070	0.070 U	0.20	0.070	0.070 U	0.20	0.070
Nickel	8.2	**0.35** J1	2.0	0.35	**1.6** J1	2.0	0.35	**0.65** J1	2.0	0.35	**1.8** J1	2.0	0.35	**1.2** J1	2.0	0.35
Selenium	5	0.50 U	2.0	0.50	**4.0**	2.0	0.50	0.50 U	2.0	0.50	0.50 U	2.0	0.50	0.50 U	2.0	0.50
Silver	22	0.10 U	0.50	0.10	0.10 U	0.50	0.10	0.10 U	0.50	0.10	0.10 U	0.50	0.10	0.10 U	0.50	0.10
Thallium	0.47	0.15 U	0.50	0.15	0.15 U	0.50	0.15	0.15 U	0.50	0.15	0.15 U	0.50	0.15	0.15 U	0.50	0.15
Zinc	56	2.1 UJ2	15.0	1.1	**9.7** J1	15.0	1.1	4.4 UJ2	15.0	1.1	1.7 UJ2	15.0	1.1	1.8 UJ2	15.0	1.1

TABLE F-1
GROUNDWATER ANALYTICAL RESULTS
PORT OF SEATTLE PROPERTY INVESTIGATION (a)
TUKWILA, WASHINGTON

Sample Identification:	Preliminary Cleanup Levels	PS-SB1a-GW			PS-SB2-GW			PS-SB3-GW			PS-SB4-GW			PS-SB5-GW/Duplicate of PS-SB-4-GW		
Laboratory Sample Identification:		6769564 / 6769565			6769566 / 6769567			6769568 / 6769569			6769570 / 6769571			6769572 / 6769573		
Laboratory Data Package Identification:		1331745			1331745			1331745			1331745			1331745		
Sample Collection Date:		08/27/2012			08/27/2012			08/27/2012			08/27/2012			08/27/2012		
FIELD PARAMETERS																
Temperature (°C)	---	14.17	NA	NA	15.92	NA	NA	15.34	NA	NA	17.48	NA	NA	17.48	NA	NA
Conductivity (uS/cm)	---	2165	NA	NA	899	NA	NA	901	NA	NA	1225	NA	NA	1225	NA	NA
Dissolved Oxygen (mg/L)	---	3.50	NA	NA	3.11	NA	NA	2.10	NA	NA	2.28	NA	NA	2.26	NA	NA
pH (SU)	---	9.24	NA	NA	7.22	NA	NA	7.12	NA	NA	9.59	NA	NA	9.59	NA	NA
ORP (mV)	---	-82.85	NA	NA	7.73	NA	NA	-129.80	NA	NA	-115.90	NA	NA	-115.90	NA	NA

NA = Not Analyzed
J = Indicates the analyte was positively identified; the associated numerical value is the approximate concentration of the analyte in the sample.
J1 = Laboratory flag indicating the analyte was positively identified at a concentration between the method detection limit and the laboratory reporting limit; the associated numerical value is the approximate concentration of the
UJ2 = The analyted was not detected in the sample at or above the numerical value shown; the numerical value is below the reporting limit, but greater than the detection limit.
Bold = Analyte detected at concentration greater than the laboratory reporting limit.
Box = Exceedance of Preliminary Cleanup Level.

(a) Port of Seattle property is located immediately adjacent to the Boeing Isaacson-Thompson site and the Lower Duwamish Waterway.

TABLE F-2
SOIL ANALYTICAL RESULTS
PORT OF SEATTLE PROPERTY INVESTIGATION (a)
TUKWILA, WASHINGTON

Sample Identification:	Preliminary Cleanup Level	PS-SB1(2-3)			PS-SB1(5-6)			PS-SB1(7-8)			PS-SB1a(16-17)			PS-SB2(2-3)			PS-SB2(5-6)		
Laboratory Sample Identification:		6769574			6769575			6769576			6769577			6769578			6769579		
Laboratory Data Package Identification:		1331745			1331745			1331745			1331745			1331745			1331745		
Sample Collection Date:		08/27/2012			08/27/2012			08/27/2012			08/27/2012			08/27/2012			08/27/2012		
		Result	Reporting Limit	Detection Limit	Result	Reporting Limit	Detection Limit	Result	Reporting Limit	Detection Limit	Result	Reporting Limit	Detection Limit	Result	Reporting Limit	Detection Limit	Result	Reporting Limit	Detection Limit
TOTAL METALS (mg/kg)																			
Method EPA 200.8/7470A																			
Antimony	5	**8.35** J	0.226	0.0747	**6.38**	0.233	0.0770	**0.224** J1	0.234	0.0773	0.0847 U	0.257	0.0847	**10.3**	0.221	0.0728	**0.875**	0.215	0.0710
Arsenic	7	**8.43** J	0.453	0.0905	**51.2**	0.467	0.0933	**201**	0.468	0.0937	**82.5**	0.513	0.103	**10.3**	0.441	0.0882	**262**	1.08	0.215
Barium	640	**993** J	4.53	0.928	**735**	4.67	0.957	**191**	0.468	0.0960	**25.5**	0.513	0.105	**1190**	4.41	0.904	**127**	0.430	0.0882
Beryllium	160	**0.320**	0.113	0.0057	**0.426**	0.117	0.0058	**0.331**	0.117	0.0059	**0.123** J1	0.128	0.0064	**0.395**	0.110	0.0055	**0.264**	0.108	0.0054
Cadmium	1.3	**5.13** J	0.113	0.0186	**2.19**	0.117	0.0191	**0.186**	0.117	0.0192	**0.0259** J1	0.128	0.0211	**5.87**	0.110	0.0181	**0.685**	0.108	0.0176
Chromium	1,480	**1430** J	4.53	1.13	**754**	4.67	1.17	**71.7**	0.468	0.117	**12.3**	0.513	0.128	**1810**	4.41	1.10	**85.9**	0.430	0.108
Copper	36	**177** J	0.453	0.165	**125**	0.467	0.170	**205**	0.468	0.171	**8.00**	0.513	0.187	**549**	4.41	1.61	**105**	0.430	0.157
Lead	250	**528** J	2.26	0.0996	**261**	2.33	0.103	**20.7**	0.234	0.0103	**1.36**	0.257	0.0113	**488**	2.21	0.0970	**62.4**	0.215	0.0095
Mercury	1.5	**0.0884** J, J1	0.111	0.0115	**0.0490** J1	0.111	0.0115	**0.0386** J1	0.113	0.0117	0.0129 U	0.124	0.0129	**0.0983** J1	0.106	0.0110	**0.0341** J1	0.106	0.0109
Nickel	210	**48.9** J	0.453	0.174	**39.4**	0.467	0.180	**19.0**	0.468	0.180	**5.70**	0.513	0.198	**63.3**	0.441	0.170	**18.6**	0.430	0.166
Selenium	1.0	**0.449** J1	0.453	0.0407	**0.326** J1	0.467	0.0420	**0.146** J1	0.468	0.0422	0.0462 U	0.513	0.0462	**0.724**	0.441	0.0397	**0.169** J1	0.430	0.0387
Silver	170	**0.294**	0.113	0.0226	**0.179**	0.117	0.0233	**0.0643** J1	0.117	0.0234	0.0257 U	0.128	0.0257	**0.560**	0.110	0.0221	**0.0695** J1	0.108	0.0215
Thallium	0.67	**0.0342** J1	0.113	0.0339	**0.0814** J1	0.117	0.0350	**0.196**	0.117	0.0351	0.0385 U	0.128	0.0385	0.0331 U	0.110	0.0331	**0.153**	0.108	0.0323
Zinc	1,400	**1700**	33.9	3.17	**956**	35.0	3.27	**162**	3.51	0.328	**17.9**	3.85	0.359	**2450**	82.7	7.72	**224**	8.07	0.753
Method SW7199A																			
Hexavalent Chromium	3.8	**17.0**	2.3	0.47	**6.1**	1.2	0.23	**0.90** J1	1.2	0.25	**0.45** J1	1.3	0.25	**6.0**	1.1	0.22	**1.3**	1.2	0.23

TABLE F-2
SOIL ANALYTICAL RESULTS
PORT OF SEATTLE PROPERTY INVESTIGATION (a)
TUKWILA, WASHINGTON

Sample Identification:	Preliminary Cleanup Level	PS-SB2(7.5-8.5)			PS-SB2(16-17)			PS-SB3(2-3)			PS-SB3(5-6)			PS-SB3(8-9)			PS-SB3(17-18)		
Laboratory Sample Identification:		6769580			6769581			6769582			6769583			6769584			6769585		
Laboratory Data Package Identification:		1331745			1331745			1331745			1331745			1331745			1331745		
Sample Collection Date:		08/27/2012			08/27/2012			08/27/2012			08/27/2012			08/27/2012			08/27/2012		
		Result	Reporting Limit	Detection Limit	Result	Reporting Limit	Detection Limit	Result	Reporting Limit	Detection Limit	Result	Reporting Limit	Detection Limit	Result	Reporting Limit	Detection Limit	Result	Reporting Limit	Detection Limit
TOTAL METALS (mg/kg)																			
Method EPA 200.8/7470A																			
Antimony	5	**0.129** J1	0.261	0.0863	0.0829 U	0.251	0.0829	**7.91**	0.218	0.0720	**1.88**	0.208	0.0686	**0.146** J1	0.223	0.0736	0.0877 U	0.266	0.0877
Arsenic	7	**10.6**	0.523	0.105	**95.2**	0.502	0.100	**28.4**	0.436	0.0872	**23.8**	0.416	0.0832	**10.1**	0.446	0.0892	**1.93**	0.531	0.106
Barium	640	**105**	0.523	0.107	**31.4**	0.502	0.103	**593**	2.18	0.447	**243**	2.08	0.426	**72.0**	0.446	0.0914	**46.9**	0.531	0.109
Beryllium	160	**0.403**	0.131	0.0065	**0.115** J1	0.126	0.0063	**0.379**	0.109	0.0055	**0.299**	0.104	0.0052	**0.258**	0.111	0.0056	**0.174**	0.133	0.0066
Cadmium	1.3	**0.0683** J1	0.131	0.0214	**0.0817** J1	0.126	0.0206	**5.28**	0.109	0.0179	**2.19**	0.104	0.0171	**0.0953** J1	0.111	0.0183	**0.0390** J1	0.133	0.0218
Chromium	1,480	**29.3**	0.523	0.131	**11.3**	0.502	0.126	**760**	2.18	0.545	**299**	2.08	0.520	**17.0**	0.446	0.111	**14.0**	0.531	0.133
Copper	36	**29.2**	0.523	0.191	**16.3**	0.502	0.183	**190**	2.18	0.796	**92.2**	0.416	0.152	**17.7**	0.446	0.163	**14.9**	0.531	0.194
Lead	250	**5.35**	0.261	0.0115	**1.58**	0.251	0.0110	**346**	1.09	0.0480	**104**	1.04	0.0458	**3.26**	0.223	0.0098	**1.87**	0.266	0.0117
Mercury	1.5	**0.0536** J1	0.126	0.0130	0.0127 U	0.123	0.0127	**0.201**	0.104	0.0108	**0.0508** J1	0.104	0.0108	**0.0169** J1	0.107	0.0110	**0.0236** J1	0.128	0.0132
Nickel	210	**19.7**	0.523	0.201	**5.90**	0.502	0.193	**55.0**	0.436	0.168	**29.5**	0.416	0.160	**14.2**	0.446	0.172	**8.32**	0.531	0.205
Selenium	1.0	**0.219** J1	0.523	0.0471	0.0452 U	0.502	0.0452	**0.451**	0.436	0.0393	**0.334** J1	0.416	0.0374	**0.0711** J1	0.446	0.0401	**0.0728** J1	0.531	0.0478
Silver	170	**0.0356** J1	0.131	0.0261	**0.0271** J1	0.126	0.0251	**0.358**	0.109	0.0218	**0.210**	0.104	0.0208	**0.0266** J1	0.111	0.0223	0.0266 U	0.133	0.0266
Thallium	0.67	**0.148**	0.131	0.0392	**0.0438** J1	0.126	0.0377	**0.0580** J1	0.109	0.0327	**0.0606** J1	0.104	0.0312	**0.0632** J1	0.111	0.0334	**0.0784** J1	0.133	0.0398
Zinc	1,400	**48.8**	3.92	0.366	**24.8**	3.77	0.351	**1820**	32.7	3.05	**535**	15.6	1.46	**36.2**	3.34	0.312	**24.2**	3.98	0.372
Method SW7199A																			
Hexavalent Chromium	3.8	**0.70** J1	1.4	0.28	**0.55** J1	1.3	0.27	**2.9**	1.1	0.22	0.22 U	1.1	0.22	**0.48** J1	1.2	0.24	**0.63** J1	1.4	0.28

TABLE F-2
SOIL ANALYTICAL RESULTS
PORT OF SEATTLE PROPERTY INVESTIGATION (a)
TUKWILA, WASHINGTON

Sample Identification:	Preliminary Cleanup Level	PS-SB4(2-3)			PS-SB4(5-6)			PS-SB4(8-9)			PS-SB4(16-17)		
Laboratory Sample Identification:		6769586			6769587			6769588			6769589		
Laboratory Data Package Identification:		1331745			1331745			1331745			1331745		
Sample Collection Date:		08/27/2012			08/27/2012			08/27/2012			08/27/2012		
		Result	Reporting Limit	Detection Limit	Result	Reporting Limit	Detection Limit	Result	Reporting Limit	Detection Limit	Result	Reporting Limit	Detection Limit
TOTAL METALS (mg/kg)													
Method EPA 200.8/7470A													
Antimony	5	**19.2**	0.219	0.0724	**16.5**	0.208	0.0687	**2.76**	0.214	0.0707	**3.22**	0.243	0.0803
Arsenic	7	**84.6**	0.439	0.0877	**30.7**	0.416	0.0833	**14.3**	0.429	0.0857	**13.5**	0.487	0.0973
Barium	640	**85.5**	0.439	0.0899	**176**	1.04	0.213	**124**	0.429	0.0879	**162**	0.487	0.0997
Beryllium	160	**0.333**	0.110	0.0055	**0.311**	0.104	0.0052	**0.253**	0.107	0.0054	**0.238**	0.122	0.0061
Cadmium	1.3	**0.395**	0.110	0.0180	**5.62**	0.104	0.0171	**1.47**	0.107	0.0176	**1.06**	0.122	0.0199
Chromium	1,480	**37.4**	0.439	0.110	**116**	0.416	0.104	**209**	1.07	0.268	**686**	2.43	0.608
Copper	36	**193**	0.439	0.160	**218**	1.04	0.380	**180**	0.429	0.156	**87.1**	0.487	0.178
Lead	250	**262**	1.10	0.0482	**526**	2.08	0.0916	**121**	0.536	0.0236	**96.7**	0.608	0.0268
Mercury	1.5	0.0113 U	0.110	0.0113	**0.589**	0.103	0.0106	**0.0358** J1	0.103	0.0106	**0.0496** J1	0.117	0.0121
Nickel	210	**69.1**	0.439	0.169	**72.3**	0.416	0.160	**455**	1.07	0.413	**68.9**	0.487	0.187
Selenium	1.0	**0.0809** J1	0.439	0.0395	**0.147** J1	0.416	0.0375	**0.165** J1	0.429	0.0386	**0.0735** J1	0.487	0.0438
Silver	170	**0.230**	0.110	0.0219	**0.330**	0.104	0.0208	**0.365**	0.107	0.0214	**0.393**	0.122	0.0243
Thallium	0.67	**0.116**	0.110	0.0329	**0.0906** J1	0.104	0.0312	**0.0599** J1	0.107	0.0322	**0.0642** J1	0.122	0.0365
Zinc	1,400	**906**	16.4	1.54	**880**	31.2	2.91	**233**	8.04	0.750	**217**	9.12	0.851
Method SW7199A													
Hexavalent Chromium	3.8	**0.48** J1	1.1	0.22	**3.2**	1.0	0.20	**1.1** J1	1.1	0.22	**0.97** J1	1.3	0.25

J = Indicates the analyte was positively identified; the associated numerical value is the approximate concentration of the analyte in the sample.
J1 = Laboratory flag indicating the analyte was positively identified at a concentration between the method detection limiit and the laboratory reporting limit; the associated numerical value is the approximate concentration of the analyte in the sample.
U = The analyte was not detected in the sample at the indicated laboratory reporting limit.
Bold = Analyte detected at concentration greater than the laboratory reporting limit.
Box = Exceedance of Preliminary Cleanup Level.

(a) Port of Seattle property is located immediately adjacent to the Boeing Isaacson-Thompson site and the Lower Duwamish Waterway.

APPENDIX G

Backup for Development of Non-TMCL pCULs

TABLE G-1
BASES FOR UPLAND PRELIMINARY CLEANUP LEVELS
BOEING ISAACSON-THOMPSON SITE
TUKWILA, WASHINGTON

	Groundwater		Basis for Preliminary Groundwater Cleanup Level	Soil (a)		Basis for Preliminary Soil Cleanup Level
VOLATILES						
Acetone	110,000	µg/L	Plant 2 TMCL	510,000	µg/kg	Plant 2 TMCL
Acrylonitrile	0.057	µg/L	Calculated consistent with Plant 2 TMCL, based on EPA Tribal Consumption of Seafood.	---	µg/kg	---
Benzene	2	µg/L	Plant 2 TMCL	93	µg/kg	Plant 2 TMCL
Bromodichloromethane	17	µg/L	Human Health - NRWQC for Consumption of Fish and Shellfish in Marine Waters	89	µg/kg	Ecology Comments: Protection of Surface Water from Vadose Soil
2-Butanone	73,000	µg/L	Calculated consistent with Plant 2 TMCL, based on EPA Region 10 Tribal Consumption of Seafood	430,000	µg/kg	Plant 2 TMCL
n-Butylbenzene	780	µg/L	Calculated consistent with Plant 2 TMCL, based on EPA RSL Tap Water Criteria	27,000	µg/kg	Plant 2 TMCL
sec-Butylbenzene	---	µg/L	---	---	µg/kg	---
Carbon Disulfide	3900	µg/L	Plant 2 TMCL	75,000	µg/kg	Plant 2 TMCL
Carbon Tetrachloride	0.46	µg/L	Plant 2 TMCL	21	µg/kg	Plant 2 TMCL
Chlorobenzene	270	µg/L	Plant 2 TMCL	26,000	µg/kg	Plant 2 TMCL
Chloroethane	21,000	µg/L	Plant 2 TMCL	280,000	µg/kg	Plant 2 TMCL
Chloroform	9.4	µg/L	Plant 2 TMCL	200	µg/kg	Plant 2 TMCL
Chloromethane	10.3	µg/L	Ecology Comments: EPA Region 10 Tribal Consumption of Seafood	1,600	µg/kg	Protection of Surface Water from Vadose Soil
4-Chlorotoluene	2600	µg/L	Plant 2 TMCL	400000	µg/kg	Plant 2 TMCL
1,2-Dichlorobenzene	440	µg/L	Plant 2 TMCL	68,000	µg/kg	Plant 2 TMCL
1,3-Dichlorobenzene	960	µg/L	Calculated consistent with Plant 2 TMCL, based on Federal Ambient Water Quality Criteria	3,840	µg/kg	Ecology Comments: Protection of Surface Water (NRWQC) from Vadose Soil
1,4-Dichlorobenzene	1.7	µg/L	Plant 2 TMCL	3,500	µg/kg	Ecology Comments: Protection of Surface Water from Vadose Soil
1,1-Dichloroethane	33	µg/L	Plant 2 TMCL	710	µg/kg	Plant 2 TMCL
1,2-Dichloroethane	3.6	µg/L	Plant 2 TMCL	70	µg/kg	Plant 2 TMCL
1,1-Dichloroethene	3.2	µg/L	Ecology Comments: NTR - Marine Waters Consumption of Organisms	81	µg/kg	Plant 2 TMCL
cis-1,2-Dichloroethene	130	µg/L	Plant 2 TMCL	2600	µg/kg	Plant 2 TMCL
trans-1,2-Dichloroethene	940	µg/L	Plant 2 TMCL	19000	µg/kg	Plant 2 TMCL
1,2-Dichloropropane	3.7	µg/L	Plant 2 TMCL	92	µg/kg	Plant 2 TMCL
Ethylbenzene	1.7	µg/L	Plant 2 TMCL	230	µg/kg	Plant 2 TMCL
Ethylene Dibromide	---	µg/L	---	---	µg/kg	---
2-Hexanone	3200	µg/L	Plant 2 TMCL	32000	µg/kg	Plant 2 TMCL
Isopropylbenzene	270	µg/L	Plant 2 TMCL	78,000	µg/kg	Plant 2 TMCL
4-Isopropyltoluene	---	µg/L	---	---	µg/kg	---
Methyl Iodide	---	µg/L	---	---	µg/kg	---
4-Methyl-2-Pentanone (MIBK)	19,000	µg/L	Plant 2 TMCL	170,000	µg/kg	Plant 2 TMCL

TABLE G-1
BASES FOR UPLAND PRELIMINARY CLEANUP LEVELS
BOEING ISAACSON-THOMPSON SITE
TUKWILA, WASHINGTON

	Groundwater		Basis for Preliminary Groundwater Cleanup Level	Soil (a)		Basis for Preliminary Soil Cleanup Level
Methylene Chloride	230	µg/L	Ecology Comments: EPA Region 10 Tribal Consumption of Seafood	2400	µg/kg	Plant 2 TMCL
Naphthalene	26	µg/L	Plant 2 TMCL	3600	µg/kg	Plant 2 TMCL
n-Propylbenzene	530	µg/L	Calculated consistent with Plant 2 TMCL, based on EPA RSL Tap Water Criteria	11,000	µg/kg	Calculated Consistent with Plant 2 TMCL, based on Protection of Groundwater for Tribal Seafood Consumption
Styrene	77,000	µg/L	Plant 2 TMCL	16,000,000	µg/kg	Plant 2 TMCL
1,1,2,2-Tetrachloroethane	0.33	µg/L	Plant 2 TMCL	13	µg/kg	Plant 2 TMCL
Tetrachloroethene	3.3	µg/L	Ecology Comments: NRWQC for Marine Water - Chronic	260	µg/kg	Ecology Comments: Protection of Surface Water from Vadose Soil
Toluene	1300	µg/L	Plant 2 TMCL	100,000	µg/kg	Plant 2 TMCL
1,1,2-Trichloro-1,2,2-trifuoroethane	59,000	µg/L	Plant 2 TMCL	1,000,000,000	µg/kg	Ecology Comments: MCTA Method B - Ingestion Only
1,2,4-Trichlorobenzene	1.13	µg/L	Ecology Comments: EPA R10 Tribal Consumption of Seafood	80	µg/kg	Plant 2 TMCL
1,1,1-Trichloroethane	46,000	µg/L	Plant 2 TMCL	1,900,000	µg/kg	Plant 2 TMCL
1,1,2-Trichloroethane	2.3	µg/L	Plant 2 TMCL	73	µg/kg	Plant 2 TMCL
Trichloroethene	1.4	µg/L	Plant 2 TMCL	51	µg/kg	Plant 2 TMCL
Trichlorofluoromethane	6900	µg/L	Plant 2 TMCL	200,000	µg/kg	Plant 2 TMCL
1,2,4-Trimethylbenzene	303	µg/L	Ecology Comments: MTCA Method B Surface Water	800,000	µg/kg	Ecology Comments: Direct Contact/Ingestion (Surrogate)
1,3,5-Trimethylbenzene	303	µg/L	Ecology Comments: MCTA Method B Surface Water	800,000	µg/kg	Ecology Comments: Direct Contact/Ingestion
Vinyl Chloride	0.53	µg/L	Ecology Comments: EPA Region 10 Tribal Consumption of Seafood	7.4	µg/kg	Ecology Comments: Protection of Surface Water from Vadose Soil
m,p-Xylene	1300	µg/L	Plant 2 TMCL	160,000	µg/kg	Plant 2 TMCL
o-Xylene	1600	µg/L	Plant 2 TMCL	200,000	µg/kg	Plant 2 TMCL
SEMIVOLATILES			Plant 2 TMCL			
Acenaphthene	120	µg/L	Plant 2 TMCL	230,000	µg/kg	Plant 2 TMCL
Acenaphthylene	---	µg/L	---	---	µg/kg	---
Anthracene	200	µg/L	Plant 2 TMCL	1,600,000	µg/kg	Plant 2 TMCL
Benzo(a)anthracene	0.0018	µg/L	Plant 2 TMCL	(b)	µg/kg	Plant 2 TMCL
Benzo(a)pyrene	0.00018	µg/L	Plant 2 TMCL	(b)	µg/kg	Plant 2 TMCL
Benzo(b)fluoranthene	0.0018	µg/L	Plant 2 TMCL	(b)	µg/kg	Plant 2 TMCL
Benzo(g,h,i)perylene	---	µg/L	---	---	µg/kg	---
Benzo(k)fluoranthene	0.0018	µg/L	Plant 2 TMCL	(b)	µg/kg	Plant 2 TMCL
Total Benzofluoranthenes	0.0018	µg/L	Plant 2 TMCL	(b)	µg/kg	Plant 2 TMCL
Benzoic Acid	2,240	µg/L	Ecology Comments: Groundwater to Protect Sediments	9,000	µg/kg	Ecology Comments: Protection of Surface Water from Vadose Soil

TABLE G-1
BASES FOR UPLAND PRELIMINARY CLEANUP LEVELS
BOEING ISAACSON-THOMPSON SITE
TUKWILA, WASHINGTON

	Groundwater		Basis for Preliminary Groundwater Cleanup Level	Soil (a)		Basis for Preliminary Soil Cleanup Level
Benzyl Alcohol	182	µg/L	Ecology Comments: Groundwater to Protect Sediments	8,000,000	µg/kg	Ecology Comments: MTCA Method B
Butylbenzylphthalate	0.41	µg/L	Plant 2 TMCL	1700	µg/kg	Plant 2 TMCL
Di-n-Butylphthalate	47	µg/L	Plant 2 TMCL	26,000	µg/kg	Plant 2 TMCL
Carbazole	---	µg/L	---	50,000	µg/kg	Ecology Comments
4-Chloro-3-methylphenol	3700	µg/L	Plant 2 TMCL	740000	µg/kg	Plant 2 TMCL
Chrysene	0.018	µg/L	Plant 2 TMCL	(b)	µg/kg	Plant 2 TMCL
Dibenz(a,h)anthracene	0.0018	µg/L	Plant 2 TMCL	(b)	µg/kg	Plant 2 TMCL
Dibenzofuran	1.3	µg/L	Ecology Comments: Groundwater to Protect Sediments	80,000	µg/kg	Ecology Comments: Protection of Surface Water from Vadose Soil
1,2-Dichlorobenzene	440	µg/L	Plant 2 TMCL	68,000	µg/kg	Plant 2 TMCL
1,3-Dichlorobenzene	---	µg/L	---	3,840	µg/kg	Plant 2 TMCL
1,4-Dichlorobenzene	1.7	µg/L	Plant 2 TMCL	3,500	µg/kg	Plant 2 TMCL
Diethylphthalate	4,236	µg/L	Ecology Comments: MTCA Method B - Modified Surface Water	178,000	µg/kg	Ecology Comments: Protection of Surface Water from Vadose Soil
2,4-Dimethylphenol	660	µg/L	Plant 2 TMCL	95,000	µg/kg	Plant 2 TMCL
Dimethylphthalate	1,100,000	µg/L	Plant 2 TMCL	71	µg/kg	Ecology Comments: SMS SCO
bis(2-Ethylhexyl)phthalate	1.2	µg/L	Plant 2 TMCL	56,600	µg/kg	Ecology Comments: Protection of Surface Water from Vadose Soil
Fluoranthene	11	µg/L	Plant 2 TMCL	230,000	µg/kg	Plant 2 TMCL
Fluorene	45	µg/L	Plant 2 TMCL	150,000	µg/kg	Plant 2 TMCL
Indeno(1,2,3-cd)pyrene	0.0018	µg/L	Plant 2 TMCL	(b)	µg/kg	
Isophorone	---	µg/L	---	---	µg/kg	---
1-Methylnaphthalene	2.3	µg/L	Plant 2 TMCL	16,000	µg/kg	Plant 2 TMCL
2-Methylnaphthalene	64	µg/L	Plant 2 TMCL	320,000	µg/kg	Ecology Comments: Direct Contact/Ingestion
2-Methylphenol	3100	µg/L	Plant 2 TMCL	250,000	µg/kg	Plant 2 TMCL
4-Methylphenol	330	µg/L	Plant 2 TMCL	41,000	µg/kg	Plant 2 TMCL
Naphthalene	26	µg/L	Plant 2 TMCL	2,100	µg/kg	Ecology Comments: SMS SCO
N-Nitrosodiphenylamine	1.96	µg/L	Ecology Comments: Groundwater to Protect Sediments	204,000	µg/kg	Ecology Comments: Direct Contact/Ingestion
Di-n-Octyl phthalate	---	µg/L	---	---	µg/kg	---
Phenanthrene	---	µg/L	---	---	µg/kg	---
Phenol	41000	µg/L	Plant 2 TMCL	1,900,000	µg/kg	Plant 2 TMCL
Pyrene	9.8	µg/L	Plant 2 TMCL	240,000	µg/kg	Plant 2 TMCL
1,2,4-Trichlorobenzene	1.13	µg/L	Ecology Comments: EPA Region 10 Tribal Consumption of Seafood	80	µg/kg	Plant 2 TMCL
Total cPAH TEQ	0.00018	µg/L	Plant 2 TMCL	15	µg/kg	Plant 2 TMCL
PCBs						
Aroclor 1242	0.000023	µg/L	Plant 2 TMCL	0.72	µg/kg	Plant 2 TMCL
Aroclor 1248	0.000023	µg/L	Plant 2 TMCL	220	µg/kg	Plant 2 TMCL
Aroclor 1254	0.0000055	µg/L	Plant 2 TMCL	0.29	µg/kg	Plant 2 TMCL
Aroclor 1260	0.000023	µg/L	Plant 2 TMCL	5.4	µg/kg	Plant 2 TMCL
Total PCBs	0.000023	µg/L	Plant 2 TMCL	1.8	µg/kg	Plant 2 TMCL

TABLE G-1
BASES FOR UPLAND PRELIMINARY CLEANUP LEVELS
BOEING ISAACSON-THOMPSON SITE
TUKWILA, WASHINGTON

	Groundwater		Basis for Preliminary Groundwater Cleanup Level	Soil (a)		Basis for Preliminary Soil Cleanup Level
TOTAL PETROLEUM HYDROCARBONS						
Diesel-Range Organics	0.5	mg/L	Plant 2 TMCL	2000	mg/kg	Plant 2 TMCL
Oil-Range Organics	0.5	mg/L	Plant 2 TMCL	2000	mg/kg	Plant 2 TMCL
Gasoline-Range Organics	1.0/0.8	mg/L	Plant 2 TMCL	100/30	mg/kg	Plant 2 TMCL
METALS						
Antimony	150	µg/L	Plant 2 TMCL	5	mg/kg	Ecology Comments: Plant 2 TMCL
Arsenic	8	µg/L	Plant 2 Background	7	mg/kg	Puget Sound Background
Barium	770	µg/L	Plant 2 TMCL	640	mg/kg	Plant 2 TMCL
Beryllium	12	µg/L	Plant 2 TMCL	160	mg/kg	Plant 2 TMCL
Cadmium	0.25	µg/L	Plant 2 TMCL	1.3	mg/kg	Ecology Comments: NTR Protection of Surface Water from Vadose Soil
Chromium	74	µg/L	Ecology Comments: NRWQC for Freshwater - Chronic	1,480	mg/kg	Ecology Comments: Protection of Groundwater
Chromium VI	0.00058	mg/L	Plant 2 TMCL	3.8	mg/kg	Ecology Comments: NTR Protection of Surface Water from Vadose Soil
Copper	8	µg/L	Plant 2 Background	36	mg/kg	Ecology Comments: Puget Sound Background
Lead	2.5	µg/L	Plant 2 TMCL	250	mg/kg	MTCA Method A for Human Health
Mercury	12	ng/L	Ecology Comments: NTR for Fresh Water - Chronic	1.5	mg/kg	Plant 2 TMCL
Nickel	8.2	µg/L	Plant 2 TMCL	210	mg/kg	Plant 2 TMCL
Selenium	5	µg/L	Plant 2 TMCL	1.0	mg/kg	Plant 2 TMCL
Silver	22	µg/L	Plant 2 TMCL	170	mg/kg	Plant 2 TMCL
Thallium	0.47	µg/L	Ecology Comments: NRWQC for Marine Water - Chronic	0.67	mg/kg	Ecology Comments: Protection of Surface Water from Vadose Soil
Zinc	56	µg/L	Plant 2 TMCL	1400	mg/kg	Plant 2 TMCL

--- = Not available

mg/L = millograms per liter
µg/L = micrograms per liter
ng/L = nanograms per liter
mg/kg = milligrams per kilogram
µg/kg = micrograms per kilogram
PCBs = polychorinated biphenyls
cPAHs = carcinogenic polycyclic hydrocarbons
TEQ = Total Equivalency Quotient
TMCL = Target Media Cleanup Levels
EPA = U.S. Environmental Protection Agency
NRWQC = National Recommeded Water Quality Criteria
RSL = Regional Screening Levels
NTR = National Toxics Rule
MTCA = Model Toxics Control Act

(a) Soil cleanup levels are based on direct human contact and protection of groundwater. If during the remedy evaluation and selection process, exposure of terrestrial ecological receptors is determined to be an important exposure pathway at the Site, the soil cleanup levels for some constituents may be reduced.
(b) Use pCUL for total cPAH TEQ

TABLE G-2
BACKUP - DEVELOPMENT OF GROUNDWATER NON-TMCL PRELIMINARY CLEANUP LEVELS
BOEING ISAACSON-THOMPSON SITE
TUKWILA, WASHINGTON

Preliminary Cleanup Level calculated using same method as Plant 2 TMCLs			Protection of Drinking Water[3]					Protection of Aquatic Species						Protection of Human Health for Consumption of Fish and Shellfish in Marine Waters				EPA Proposed TMCL for Surface Water and Groundwater Discharging to Surface Water in the Lower Duwamish Waterway	
			Drinking Water Standard/Criteria[4]					Freshwater Standards			Marine Standards								
			Federal Primary Drinking Water Standards[5]	EPA RSL Tap Water Criteria[6]	State Primary Drinking Water Standards[7]	MTCA A Groundwater Cleanup Level[8]	MTCA B Groundwater Cleanup Level[9]	Federal National Toxics Rule[10]	Federal Ambient Water Quality Criteria[11,12]	Washington Surface Water Quality Standards[12,13]	Federal National Toxics Rule[10]	Federal Ambient Water Quality Criteria[11]	Washington Surface Water Quality Standards[12, 13]	Federal National Toxics Rule[10]	Federal Ambient Water Quality Criteria[11]	Lowest of Tribal and Asian/Pacific Islander Exposure Scenarios[14]	MTCA Method B Surface Water[15]		
			EPA MCLs		Washington MCLs			Chronic	Chronic	Chronic	Chronic	Chronic	Chronic	Organism Only			Fish/Shellfish		
CAS Number	Chemical[1]	Boeing Plant 2 Groundwater Background[2]	(µg/L)	(µg/L)	(µg/L)	(µg/L)	(µg/L)	(µg/L)	(µg/L)	(µg/L)	(µg/L)	(µg/L)	(µg/L)	(µg/L)			(µg/L)	(µg/L)	Exposure Pathway Basis of TMCL
Volatile Organic Compounds (VOCs)																			
107-13-1	Acrylonitrile		--	4.5E-02	--	--	8.1E-02	--	--	--	--	--	--	0.66	0.25	5.7E-02	4.0E-01	5.7E-02	EPA R10 Tribal Consumption of Seafood.
78-93-3	2-Butanone (MEK)	--	--	7.1E+03	--	--	4.8E+03	--	--	--	--	--	--	--	--	7.3E+04	4.9E+05	7.3E+04	EPA R10 Tribal Consumption of Seafood.
104-51-8	n-Butylbenzene		--	7.8E+02	--	--	--	--	--	--	--	--	--	--	--	--	--	7.8E+02	Surrogate Value: EPA RSL Tap Water Criteria.
135-98-8	sec-Butylbenzene		--	--	--	--	--	--	--	--	--	--	--	--	--	--	--	--	Report results but no comparison.
541-73-1	1,3-Dichlorobenzene		--	--	--	--	--	--	--	--	--	--	--	2.6E+03	9.6E+02	--	--	9.6E+02	Federal Ambient Water Quality Criteria
103-65-1	n-Propylbenzene		--	5.3E+02	--	--	8.0E+02	--	--	--	--	--	--	--	--	--	--	5.3E+02	Surrogate Value: EPA RSL Tap Water Criteria.

NOTES:

1 Not all chemicals are constituents needing TMCLs at Boeing Plant 2.
2 Background concentration in groundwater as per EPA approval of the Technical Memorandum on background, May 2008.
3 Drinking water standards/criteria are not applicable to Boeing Plant 2 unless no other applicable standard exists for a constituent not needing a TMCL in groundwater.
4 The standards are potentially applicable to groundwater that may be used for drinking water supplies. Ecology determines the maximum beneficial use of groundwater, which may or may not include drinking.
5 National Primary Drinking Water Regulations, Maximum Contaminant Levels (MCLs); http://water.epa.gov/drink/contaminants/index.cfm.
6 EPA RSL, Residential Tapwaters; http://www.epa.gov/region9/superfund/prg/.
7 Washington Primary Drinking Water Standards WAC 246-290-130, Maximum Contaminant Levels (MCLs).
8 Surrogate values used for TPH based on drinking water consumption because the only TPH surface water criteria is based on visual sheen. These values presented in Table 720-1 in conjunction with regulations present in MTCA 173-340-720 (3)(b)(i).
9 Standard MTCA Method B uses WAC 173-340-740; equations 730-1 and 730-2 (Ecology 2007). Parameters and toxicity factors can be found in associated tables in this attachment.
10 National Toxics Rule (NTR), 40 CFR 131.36.
11 EPA Ambient Water Quality Criteria (AWQCs), Clean Water Action Section 304.
12 Washington Surface Water Quality Standards; WAC 173-201A, Surface Water Quality Criteria.
13 EPA and Ecology fish consumption scenarios are based on MTCA Method B Surface Water Equations (equations 730-1 and 730-2); however, they use different exposure assumptions. Details are given in associated tables in this attachment.
14 This column uses the approach described in Note 8, but selects the lower concentrations that are protective of special populations including Tribal and Asian/Pacific Islander; the lowest concentration is always associated with Tribal exposure.
15 This column is included for comparison only and is based on the default exposure scenario in MTCA 173-340-730.

TABLE G-3
BACKUP - DEVELOPMENT OF SOIL NON-TMCL PRELIMINARY CLEANUP LEVELS
BOEING ISAACSON-THOMPSON SITE
TUKWILA, WASHINGTON

CAS Number	Preliminary Cleanup Level calculated using same method as Plant 2 TMCLs Chemical[1]	Puget Sound Background[2] (mg/kg)	Residential EPA EPA RSL Residential Includes Ingestion, Dermal, and Inhalation[3] (mg/kg)	Residential Ecology MTCA Method A Unrestricted Land Use Includes CLARC Toxicity Factors[4] (mg/kg)	Residential Ecology MTCA Method B Unrestricted Land Use Includes CLARC Toxicity Factors[5] (mg/kg)	Industrial EPA Modified EPA RSL Industrial Includes Ingestion, Dermal, and Inhalation[6] (mg/kg)	Industrial Ecology MTCA Method C Industrial Land Use Includes CLARC Toxicity Factors[5] (mg/kg)	Sediment Protection Ecology SMS Sediment Quality Standards[7] (mg/kg dry weight)	Groundwater Protection Ecology Soil Level to Protect Groundwater Using Three-phase Model[8] (mg/kg)	EPA Proposed Soil TMCL to Protect all Pathways (mg/kg)	EPA Proposed Soil TMCL to Protect all Pathways Exposure Pathway Basis of TMCL
Volatile Organic Constituents											
103-65-1	n-Propylbenzene		3.4E+03	--	8.0E+03	2.1E+04	3.5E+05	--	1.1E+01	1.1E+01	
135-98-8	sec-Butylbenzene		--	--	--	--	--	--	--	--	Report results but no comparison.

Notes:

1 Not all chemicals are constituents needing TMCLs at Boeing Plant 2.
2 Table 7, Puget Sound Soil Background Values from Ecology State-wide Natural Background for Metals in Soil, October 1994; except for Arsenic where MTCA established 20 mg/kg as background (WAC 173-340-900 Table 740-1, Footnote b).
3 EPA RSL calculations using EPA toxicity factors and exposure parameters as presented in associated tables in this attachment.
4 Surrogate value used for TPH based on protection of groundwater as drinking water. This value is presented in MTCA's Table 740-1 in conjunction with regulations present in MTCA 173-340-740 (2)(b)(i).
5 MTCA Method B uses WAC 173-340-740, equations 740-1 and 740-2; MTCA Method C uses WAC-173-340-745, equations 745-1 and 745-2 (Ecology 2007); specific parameters are presented in associated tables in this attachment; CLARC toxicity values updated (refer to Toxicity Factor Table).
6 EPA RSL calculations using EPA toxicity factors and exposure parameters as presented in associated tables in this attachment; excess individual lifetime cancer risk was adjusted to 1 in 100,000 and ingestion rate was increased to 200 mg/day by EPA Region 10 (R10) risk management decision.
7 Sediment Management Standards Sediment Quality Standards Chemical Criteria (WAC-173-204-320[a]); expressed as their equivalent dry weight values.
8 Soil to Groundwater cleanup values are based on the MTCA fixed parameter three-phase partitioning model (WAC 173-340-747, equation 747-1), using partitioning factors presented in associated tables in this attachment.

Abbreviations:

CAS = Chemical abstract number
CLARC = Cleanup Levels and Risk Calculation
MTCA = Model Toxics Control Act
RSL = Regional screening level
Ecology = Washington State Department of Ecology
EPA = U.S. Environmental Protection Agency
SMS = Sediment Management Standards
TMCLs = Target Media Cleanup Levels
WAC = Washington Administrative Code
RCW = Revised Code of Washington
TPH = Total Petroleum Hydrocarbons
mg/kg = milligrams per kilogram

References:

Ecology. 2007. *Model Toxics Control Act Statute and Regulation; Model Toxics Control Act Chapter 70.105D RCW, Uniform Environmental Covenants Act Chapter 64.70 RCW, MTCA Cleanup Regulation Chapter 173-340 WAC* .
Compiled by Washington State Department of Ecology, Toxics Cleanup Program. Publication No. 94-06, Revised November 2007.

TABLE G-4
LEACHING CALCULATIONS PARAMETERS
BOEING ISAACSON-THOMPSON SITE
TUKWILA, WASHINGTON

Chemical	Hcc	KOC	Source
n-Propylbenzene	0.4292723	813.1	EPA RSL 2012

EPA = U.S. Environmental Protection Agency
RSL = Regional screening level

TABLE G-5
VOCS - WATER CALCULATIONS

CAS Number	Chemical	Surface Water to Fish Consumption Pathway: EPA Tribal Calculations				Ecology MTCA Calculations						Proposed Water to Fish Consumption TMCLs				Drinking Water Pathways: EPA		Drinking Water Pathways: Ecology	
		Tribal Consumption Child Includes EPA BCFs and Toxicity Factors[1]		Tribal Consumption Adult Includes EPA BCFs and Toxicity Factors[1]		Default (Recreational) Includes EPA BCFs and Toxicity Factors[2]		Asian/Pacific Islander Consumption Child Includes EPA BCFs and Toxicity Factors[3]		Asian/Pacific Islander Consumption Adult Includes EPA BCFs and Toxicity Factors[3]		MTCA Default Consumption Rate Modified to Use EPA Toxicity and Partitioning Coefficients		Tribal and/or Asian/Pacific Islander Modified to Use EPA Toxicity and Partitioning Coefficients		EPA RSL Tap Water[4]		MTCA Method B Groundwater to Protect Drinking Water Use[5]	
		Cancer (µg/L)	Non-cancer (µg/L)	Cancer (µg/L)	Non-cancer (µg/L)	Cancer (µg/L)	Non-cancer (µg/L)	Cancer (µg/L)	Non-cancer (µg/L)	Cancer (µg/L)	Non-cancer (µg/L)	TMCL (µg/L)	Source (µg/L)	TMCL (µg/L)	Source (µg/L)	Cancer (µg/L)	Non-cancer (µg/L)	Cancer (µg/L)	Non-cancer (µg/L)
67-64-1	Acetone	--	1.1E+05	--	2.4E+05	--	7.4E+05	--	1.9E+05	--	3.1E+05	7.4E+05	MTCA B	1.1E+05	Tribal Child	3.3E+04	2.2E+04	--	7.2E+03
107-13-1	Acrylonitrile	2.6E+00	4.9E+03	5.4E-01	1.1E+04	3.8E+00	3.3E+04	4.5E+00	8.3E+03	1.9E+00	1.4E+04	3.8E+00	MTCA B	5.4E-01	Tribal Adult	4.5E-02	4.1E+00	8.1E-02	--
78-93-3	2-Butanone (MEK)	--	7.3E+04	--	1.6E+05	--	4.9E+05	--	1.2E+05	--	2.1E+05	4.9E+05	MTCA B	7.3E+04	Tribal Child	--	7.1E+03	--	4.8E+03

NOTES:

1 MTCA Method B Equations 730-1 and 730-2 modified to apply Tribal fish ingestion rates, body weights, and exposure duration (Ecology 2007). Refer to associated tables in this attachment for toxicity factors, bioconcentration factors, and exposure parameters.
2 MTCA Method B Equations 730-1 and 730-2 using default exposure assumptions. Refer to associated tables in this attachment for toxicity factors, bioconcentration factors, and exposure parameters.
3 MTCA Method B Equations 730-1 and 730-2 modified to apply Asian/Pacific Islander fish ingestion rates, body weights, and exposure duration (Ecology 2007). Refer to associated tables in this attachment for toxicity factors, bioconcentration factors, and exposure parameters.
4 EPA RSL, Residential Tapwaters; http://www.epa.gov/region9/superfund/prg/.
5 MTCA Method B Equations 720-1 and 720-2; groundwater cleanup levels to protect drinking water uses.

ABBREVIATIONS:

BCF	Bioconcentration factor	EPA	U.S. Environmental Protection Agency
CAS	Chemical abstract number	MTCA	Model Toxics Control Act
Ecology	Washington State Deparment of Ecology	RSL	Regional screening level

TABLE G-6
VOCS - CROSS-MEDIA FACTORS

		Other Chemical Factors				
		EPA R10				
CAS Number	Chemical	GI Absorption Conversion Factor (unitless)	Dermal Absorption Fraction (unitless)	Volatilization Factor (m^3/kg)	Source For All Factors	(1/VF + 1/PEF)[1] (kg/m^3)
107-13-1	Acrylonitrile	1.0E+00		8.3E+03	EPA RSL 2012	
78-93-3	2-Butanone (MEK)	1.0E+00	--	1.3E+04	EPA RSL 2010	7.6E-05

TABLE G-6
VOCS - CROSS-MEDIA FACTORS

		Bioconcentration Factors							
		EPA R10		Ecology MTCA/CLARC		Others		Selected for Use[4]	
CAS Number	Chemical	Water to Fish BCF[2] (L/kg)	Source	Water to Fish BCF[3] (L/kg)	Source	Water to Fish BCF (L/kg)	Source	Water to Fish BCF (L/kg)	Source
107-13-1	Acrylonitrile	3.2E+00	HHRAP	3.16E+00	AWQC Gold Book			3.2E+00	HHRAP
78-93-3	2-Butanone (MEK)	3.2E+00	HHRAP	--	--	--	--	3.2E+00	HHRAP

TABLE G-6
VOCS - CROSS-MEDIA FACTORS

		Henry's Law Constant[b]					
		EPA R10		Ecology MTCA/CLARC		Selected for Use	
CAS Number	Chemical	H_{cc} (unitless)	Source	H_{cc} (unitless)	Source	H_{cc} (unitless)	Source
107-13-1	Acrylonitrile	5.6E-03	EPI Suite 2010	--	CLARC	5.6E-03	EPI Suite 2010
78-93-3	2-Butanone (MEK)	2.3E-03	EPI Suite 2010	--	--	2.3E-03	Average

TABLE G-6
VOCS - CROSS-MEDIA FACTORS

		Vapor Pressure at 25°C		Soil Organic Carbon to Water Partitioning Coefficient (K_{oc})							
		EPA R10		EPA R10		Ecology MTCA/CLARC		Others		Selected for Use	
CAS Number	Chemical	VP (mm Hg)	Source	K_{oc} (L/kg)	Source	K_{oc} (L/kg)	Source	K_{oc} (L/kg)	Source	K_{oc} (L/kg)	Source
107-13-1	Acrylonitrile			8.5E+00	EPA RSL 2012	--	--	1.76	HHRAP	5.1E+00	Average
78-93-3	2-Butanone (MEK)	9.1E+01	EPI Suite 2010	4.5E+00	EPI Suite 2010	--	--	--	--	4.5E+00	Average

TABLE G-6
VOCS - CROSS-MEDIA FACTORS

		Soil to Water Partitioning Coefficient ($K_d = K_{oc} \times f_{oc}$)							
		EPA R10		Ecology MTCA/CLARC		Others[6]		Selected for Use[6]	
CAS Number	Chemical	K_d (L/kg)	Source	K_d (L/kg)	Source	K_d (L/kg)	Source	K_d (L/kg)	Source
107-13-1	Acrylonitrile	8.5E-03	RSL Koc*0.001	--	--	1.0E-01	K_{oc}*0.02	1.0E-01	K_{oc}*0.02
78-93-3	2-Butanone (MEK)	4.5E-03	RSL K_{oc}*0.001	--	--	9.0E-02	K_{oc}*0.02	9.0E-02	K_{oc}*0.02

TABLE G-7
VOCS - TOXICOLOGICAL FACTORS

		EPA R10[1]												Ecology[2]									
		Oral/Ingestion Toxicity Factors				Dermal Toxicity Factors[3]				Inhalation Toxicity Factors				Oral/Ingestion Toxicity Factors				Dermal Toxicity Factors[4]				Inhalation Toxicity Factors	
CAS Number	Constituent	Cancer Slope Factor (CSF_o) (kg-day/mg)	Source	Reference Dose (RfD_o) (mg/kg-day)	Source	Cancer Slope Factor (CSF_d) (kg-day/mg)	Source	Reference Dose (RfD_d) (mg/kg-day)	Source	Inhalation Unit Risk (IUR) ($m^3/\mu g$)	Source	Reference Concentration (RfC_i) (mg/m^3)	Source	Cancer Potency Factor (CPF_o) (kg-day/mg)	Source	Reference Dose (RfD_o) (mg/kg-day)	Source	Cancer Potency Factor (CPF_d) (kg-day/mg)	Source	Reference Dose (RfD_d) (mg/kg-day)	Source	Cancer Potency Factor (CPF_i) (kg-day/mg)	Source
107-13-1	Acrylonitrile	5.4E-01		4.0E-02		5.4E-01	CSF_o/GI-abs	4.0E-02	RfD_o*GI-abs	6.8E-05	IRIS	2.0E-03	IRIS	5.40E-01		--		6.8E-01	CPF_o/GI-abs	--	--		
75-27-4	Bromodichloromethane	6.2E-02		2.0E-02		6.2E-02	CSF_o/GI-abs	2.0E-02	RfD_o*GI-abs	3.7E-05	Cal/EPA	--	IRIS	6.2E-02		2.0E-02		7.8E-02	CPF_o/GI-abs	1.6E-02	RfD_o*GI-abs		

Notes:

1 Toxicity factors are from the November 2010 EPA RSL Tables unless otherwise noted.
2 All toxicity factors derived from the CLARC database effective January 30, 2011 unless more recent toxicity factors were available in IRIS; MTCA Air Equation modified to use RfC_i from EPA, rather than RfD_i from CLARC.
3 EPA dermal toxicity factors are calculated based on the oral toxicity factors as follows: $CSF_d = CSF_o$/GI-abs; $RfD_d = RfD_d$ x GI-abs. GI-abs is the gastrointestinal absorption conversion factor, which is equal to 1.0 except where otherwise specified (usually only for metals).
5 Ecology has established toxicity factors for TCE until such time as new factors are available in IRIS; refer to for details: https://fortress.wa.gov/ecy/clarc/FocusSheets/TCE PCE Oct 2004 Final.pdf. EPA R10 has accepted this approach for this site.
6 Ecology has established the following "rule" for dealing with the mutagenic effects of vinyl chloride; refer to for details: https://fortress.wa.gov/ecy/clarc/FocusSheets/VinylChloride.pdf. EPA R10 has accepted this approach for this site.

Abbreviations:

ATSDR Agency for Toxic Substances and Disease Registry
Cal/EPA California Environmental Protection Agency
Ecology Washington State Department of Ecology
EPA U.S. Environmental Protection Agency
RSL Regional screening level
EPA RSL 2010 Regional Screening Levels, November 2010; https://www.epa.gov/region9/superfund/prg/.
HEAST Health Effects Assessment Summary Tables
IRIS Integrated Risk Information System
MTCA Model Toxics Control Act
NJEPA New Jersey Environmental Protection Agency
R10 Region 10
VOC Volatile organic compound

TABLE G-8
VOCs - GROUNDWATER EQUATIONS AND PARAMETERS

Surface Water to Fish Consumption by Humans: Non-cancer Effects

$$\text{Surface Water Cleanup or Screening Level } (\mu g/L) = \frac{(RfD_o \times ABW \times UCF1 \times UCF2 \times HQ \times AT)}{(BCF \times FCR \times FDF \times ED)}$$

RfD_o = Oral reference dose (mg/kg-day)
ABW = Average body weight (kg)
UCF1 = 1,000 g/mg
UCF2 = 1,000 g/L
HQ = Hazard quotient (unitless)
AT = Averaging time (years)
BCF = Bioconcentration factor (L/kg)
FCR = Fish consumption rate (g/day)
FDF = Fish diet fraction (unitless)
ED = Exposure duration (years)

Exposure Scenarios	RfD_o (mg/kg-day)	ABW (kg)	HQ (unitless)	AT (years)	BCF (L/kg)	FCR (g/day)	FDF (unitless)	ED (years)
MTCA Default[1]	<table>	70	1	30	<table>	54	0.5	30
MTCA Asian/Pacific Islander Child[2,3]	<table>	15	1	6	<table>	23	1	6
MTCA Asian/Pacific Islander Adult[2,3]	<table>	63	1	24	<table>	57.1	1	24
EPA Tribal Child[3,4]	<table>	15	1	6	<table>	38.8	1	6
EPA Tribal Adult[3,4]	<table>	81.8	1	64	<table>	97.1	1	64

Surface Water to Fish Consumption by Humans: Cancer

$$\text{Surface Water Cleanup or Screening Level } (\mu g/L) = \frac{(RISK \times ABW \times UCF1 \times UCF2 \times AT)}{(CPF_o \times BCF \times FCR \times FDF \times ED)}$$

Risk = Target excess individual lifetime cancer risk level (unitless)
ABW = Average body weight (kg)
UCF1 = 1,000 µg/mg
UCF2 = 1,000 g/L
AT = Averaging time (years)
CPF_o = Cancer potency factor (kg-day/mg)
BCF = Bioconcentration factor (L/kg)
FCR = Fish consumption rate (g/day)
FDF = Fish diet fraction (unitless)
ED = Exposure duration (years)

Exposure Scenarios	Risk (unitless)	ABW (kg)	AT (years)	CPF_o (kg-day/mg)	BCF (L/kg)	FCR (g/day)	FDF (unitless)	ED (years)
MTCA Default[1]	1.00E-06	70	75	<table>	<table>	54	0.5	30
MTCA Asian/Pacific Islander Child[2,3]	1.00E-06	15	70	<table>	<table>	23	1	6
MTCA Asian/Pacific Islander Adult[2,3]	1.00E-06	63	70	<table>	<table>	57.1	1	24
EPA Tribal Child[3,4]	1.00E-06	15	70	<table>	<table>	38.8	1	6
EPA Tribal Adult[3,4]	1.00E-06	81.8	70	<table>	<table>	97.1	1	64

Groundwater (as Drinking Water) Cleanup Levels: Non-cancer Effects

$$\text{Surface Water Cleanup or Screening Level } (\mu g/L) = \frac{(RfD_o \times ABW \times UCF \times HQ \times AT)}{(DWIR \times INH \times DWF \times ED)}$$

RfD_o = Oral reference dose (mg/kg-day)
ABW = Average body weight (kg)
UCF = 1,000 µg/mg
HQ = Hazard quotient (unitless)
AT = Averaging time (years)
DWIR = Drinking water ingestion rate (L/day)
INH = Inhalation correction factor (unitless)
DWF = Drinking water fraction (unitless)
ED = Exposure duration (years)

Exposure Scenarios	RfD_o (mg/kg-day)	ABW (kg)	HQ (unitless)	AT (years)	DWIR (L/day)	INH (unitless)	DWF (unitless)	ED (years)
MTCA Default[1]	<table>	16	1	6	1	2	1	6

Groundwater (as Drinking Water) Cleanup Levels: Cancer

$$\text{Surface Water Cleanup or Screening Level } (\mu g/L) = \frac{(RISK \times ABW \times UCF \times AT)}{(CPF_o \times DWIR \times INH \times DWF \times ED)}$$

Risk = Target excess individual lifetime cancer risk level (unitless)
ABW = Average body weight (kg)
UCF = 1000 µg/mg
AT = Averaging time (years)
CPF_o = Cancer potency factor (kg-day/mg)
DWIR = Drinking water ingestion rate (L/day)
INH = Inhalation correction factor (unitless)
DWF = Drinking water fraction (unitless)
ED = Exposure duration (years)

Exposure Scenarios	Risk (unitless)	ABW (kg)	AT (years)	CPF_o (kg-day/mg)	DWIR (L/day)	INH (unitless)	DWF (unitless)	ED (years)
MTCA Default[1]	1.00E-06	70	75	<table>	2	2	1	30

Notes:

<table> Indicates a chemical-specific factor is available in the associated tables of this attachment.
1 All parameters derived from Model Toxics Control Act (MTCA) WAC 173-340-730, equations 720-1 and 720-2.
2 Fish consumption rates derived from Washington State Department of Ecology (Ecology) 2009: MTCA Regulation Update Summary, Fish Consumption Rates for High Exposure Populations.
3 Fish consumption rates include both finfish and shellfish, and exclude salmon.
4 All parameters derived from U.S. Environmental Protection Agency (EPA) Region 10, 2007: Framework for Selecting and Using Tribal Fish and Shellfish Consumption Rates for Risk-based Decision Making.

APPENDIX H

Boeing Plant 2 TMCL Technical Memoranda And EPA Approval Letter

Boeing Plant 2 TMCLs Revision –
Resubmittal and Approval Confirmation,
February 14, 2013

The Boeing Company
P.O. Box 3707
Seattle, WA 98124-2207

January 14, 2013
9L-22-N410-WDE-025

HAND DELIVERED

Ms. Holly Arrigoni
U.S. Environmental Protection Agency
1200 Sixth Avenue, Suite 900, AWT-121
Seattle, WA 98101

Subject: *Target Media Cleanup Levels (TMCLs) Revision* – Re-submittal and Approval Confirmation
Boeing Plant 2, WAD 00925 6819
RCRA Docket #1092-01-22-3008(h)

Dear Ms. Arrigoni:

As you know EPA and Boeing have worked closely over the last few months to finalize an update to the 2011 Target Media Cleanup Levels (TMCLs) for Plant 2. Please find attached a Memo of Revisions to the TMCLs resulting from that work. This attachment replaces the October 21, 2012 memo and other related emailed correspondence on TMCL revisions.

All of the revisions that we have discussed with you over the last several months are reflected in the attached document. To the best of our knowledge, it accurately reflects the language and rationale that have been thoroughly vetted with you. We are applying the TMCLs in developing Final Media Cleanup Levels (FMCLs) in our work on the Corrective Measures Study Report. Accordingly, your approval confirmation of these TMCL revisions is needed to allow us to proceed with this next phase in confidence.

Later this month you will receive a packet of draft memos outlining the various issues related to the FMCLs that we have also discussed with you. In this manner we have separated this correspondence on TMCL revisions, which are broadly relevant to other sites, from the FMCLs, which are specific to Plant 2.

Please contact me if you have any further questions or comment on this important matter.

Sincerely,

Will Ernst
Project Coordinator, Environmental Remediation
M/C 1W-12; 425.891.7724; 206.544.2728 (fax); william.d.ernst@boeing.com

Enclosure

cc: Hideo Fujita – Washington Dept. of Ecology (by email w/ enclosure)

FLOYD | SNIDER
strategy ▪ science ▪ engineering

Two Union Square
601 Union Street, Suite 600
Seattle, WA 98101
tel: 206.292.2078 fax: 206.682.7867

Memorandum

To: Holly Arrigoni and Marcia Bailey, USEPA R10

Copies: Doug Kunkel, Ted Norton, Kent Angelos, Will Ernst, Carl Bach, and Tom McKeon

From: Teri A. Floyd, Ph.D., Amanda McKay, M.S., and Emily Santee, EIT

Date: February 14, 2013

Project No: Boeing Plant 2

Re: **Request for Approval of Updated TMCLs due to Toxicity Updates and Other Factors**

1.0 OVERVIEW

Target Media Cleanup Levels (TMCLs) for Boeing Plant 2 (Plant 2) were developed in 2010 and 2011 and approved by U.S. Environmental Protection Agency (USEPA) in 2011. The approved, final document is referred to as the 2011 TMCL Tech Memo (Boeing 2011). Between late summer 2012 and February 2013, the Boeing Company (Boeing) worked cooperatively with USEPA to revise several of the TMCLs. This memorandum provides the justification for the revision of TMCLs for the specific chemicals; it does not address the development of Final Media Cleanup Levels. The chemicals addressed in this memo and a short description of the changes are as follows:

- Methylene chloride. Changes due to revised toxicity factors in Integrated Risk Information System (IRIS).
- Tetrachloroethene (PCE). Changes due to revised toxicity factors in IRIS.
- Trichloroethene (TCE). Changes due to revised toxicity factors in IRIS.
- 1,1-Dichloroethene (1,1-DCE). Changes due to invalidation of an old standard, which is based on out-dated toxicity factors.
- Vinyl Chloride. Changes to correct a calculation error.
- Barium. Changes to replace an incorrect bioconcentration factor.
- Aluminum. Changes the way the TMCL is applied to measured concentrations.

2.0 TMCLS REVISED DUE TO IRIS UPDATES

IRIS has released updated toxicity factors for methylene chloride, PCE, and TCE. For each chemical, an updated oral cancer potency factor (CPF_o), oral reference dose (RfD_o), cancer inhalation unit risk (IUR), and inhalation reference concentration (RFC_i) were released. Both USEPA and the Washington State Department of Ecology (Ecology) have incorporated the updated toxicity factors into screening and cleanup levels, though the calculations and

methodology of incorporation vary between the two agencies and between the three constituents. Because of these variations the application of the updated toxicity factors used to arrive at revised soil, groundwater, and air TMCLs will be discussed separately for each constituent.

2.1 PCE

USEPA and Ecology have updated toxicity factors for PCE consistent with the IRIS toxicity factor update. The Cleanup Levels and Risk Calculations (CLARC) database has not yet been updated with the toxicity factors; however, an update is in progress, and Ecology has published guidance indicating which toxicity factors should be used to calculate groundwater, soil, and air cleanup levels as a result of the IRIS toxicity factor updates (Ecology 2012). The updated toxicity factors utilized in USEPA and Ecology calculations are presented in the table below.

Table 1
Updated PCE Toxicity Factors

Toxicity Factor Type	USEPA		Ecology	
	Original	Updated	Original	Updated
CPF_o (kg-day/mg)	0.51	0.0021	0.54	0.0021
RfD_o (mg/kg-day)	0.01	0.006	0.01	0.006
IUR ($m^3/\mu g$)	5.9E-6	2.6E-7	NA	NA
RFC_i (mg/m^3)	2.3	0.04	NA	NA
CPF_i (mg/kg-day)	NA	NA	0.021	9.1E-4
RfDi (mg/kg-day)	NA	NA	NA	0.0114

Abbreviations:

- CPF_o Oral cancer potency factor
- CPF_i Inhalation cancer potency factor
- IUR Inhalation unit risk
- NA Not applicable in the approach used
- PCE Tetrachloroethylene
- RFC_i Inhalation reference concentration
- RFD_i Inhalation reference dose
- RfD_o Oral reference dose

The TMCLs that were updated as a result of these new toxicity factors are described below.

2.1.1 Groundwater TMCL for PCE

Several potential groundwater cleanup levels were recalculated using the updated toxicity factors. These included the following:

- Surface water cleanup levels that are protective of the fish consumption exposure pathways, including:
  - USEPA calculations for surface water concentrations protective of tribal seafood consumers

  - Model Toxics Control Act (MTCA) Method B calculations for surface water concentrations protective of recreational fisherman and Asian/Pacific Islander seafood consumers.
- USEPA Regional Screening Levels (RSLs) for tap water
- MTCA Method B groundwater cleanup levels to protect drinking water use

The calculated groundwater cleanup level based on surface water concentrations that are protective of the seafood consumption exposure pathways continues to be used as the Plant 2 TMCL for PCE; however, the numeric value associated with this cleanup level has changed as a result of the updated toxicity factors.

Based on the updated toxicity factors, the revised PCE groundwater TMCL increased from 0.021 µg/L to 5.3 µg/L.

2.1.2 Soil TMCL for PCE

Soil cleanup levels were recalculated using the updated toxicity factors presented in Table 1. These included the following:

- USEPA RSLs for residential and industrial direct contact exposure.
- MTCA Method B and Method C for residential and industrial direct contact exposure.
- MTCA three-phase model for unsaturated soils. This cleanup level is calculated for soil assuming partitioning between soil, soil vapor, and groundwater. The equation does not directly use individual toxicity factors, but does include a groundwater cleanup level as part of the calculation; therefore, these results have been updated because the groundwater cleanup levels have been updated, as previously discussed.

The MTCA three-phase model resulted in the lowest cleanup levels for all three chemicals; therefore, these were selected as the proposed soil TMCLs.

Based on the updated toxicity factors, the revised PCE soil TMCL increased from 0.0016 mg/kg to 0.41 mg/kg.

2.1.3 Air TMCLs for PCE

Ambient air cleanup levels were recalculated using the updated toxicity factors. These included:

- USEPA RSLs for residential and industrial exposure
- MTCA Method B and Method C for residential and industrial exposure

Because Plant 2 is a USEPA-run site, USEPA RSLs were selected as the proposed ambient air TMCLs.

Based on the updated toxicity factors, the revised ambient air TMCLs for PCE are as follows:

- PCE residential air TMCL increased from 0.41 µg/m^3 to 9.4 µg/m^3.
- PCE industrial air TMCL increased from 21 µg/m^3 to 470 µg/m^3.

2.2 Methylene Chloride

As a result of the IRIS update, USEPA has updated the toxicity factors for methylene chloride. Updated toxicity factors are presented in the table below. In addition to updating toxicity factors, USEPA has classified methylene chloride as mutagenic, requiring early life considerations for residential exposure pathways as a result of the IRIS update. More detailed information on early life exposure age dependent adjustment factors and other parameters necessary to perform cancer-based RSL calculations based on a mutagenic mode of action may be found in the final guidance published in the screening level tables available on the USEPA Region 9 website (USEPA 2012).

It is important to note that though the equation differs between the cancer-based RSLs where early life exposure is possible (residential RSL calculations) and where early life exposure is not possible (industrial RSL calculations), the toxicity factors are the same.

Table 2
USEPA's Updated Methylene Chloride Toxicity Factors

Toxicity Factor Type	Original	Updated
CPF_o (kg-day/mg)	0.0075	0.002
RfD_o (mg/kg-day)	0.06	0.006
IUR (m^3/µg)	4.7E-7	1.0E-8
RFC_i (mg/m^3)	1.0	0.6

Abbreviations:
CPF_o Oral cancer potency factor
RfD_o Oral reference dose
IUR Inhalation unit risk factor
RFC_i Inhalation reference concentration

Ecology has not yet updated the CLARC database or published guidance indicating how Ecology will apply the new toxicity factors to the calculation of MTCA cleanup levels. As a result, only USEPA RSLs have been updated at this time. The MTCA calculations present in the 2011 TMCL Tech Memo were not updated.

2.2.1 Groundwater TMCL for Methylene Chloride

Several potential groundwater cleanup levels were recalculated using the updated toxicity factors, when applicable, the new mutagenic calculation for cancer-based cleanup levels where an early-life exposure is possible. These included the following:

- USEPA calculations for surface water concentrations that are protective of the seafood consumption exposure pathways for tribal members
- USEPA RSLs for tap water

The Plant 2 TMCL remains the groundwater cleanup level, which results in surface water concentrations that are protective of tribal consumption of fish and shellfish; continues to be used as the Plant 2 TMCL; however, the numeric value changed due to the change in toxicity factors.

Based on the updated toxicity factors, the methylene chloride groundwater TMCL increased from 61 µg/L to 230 µg/L.

2.2.2 Soil TMCL for Methylene Chloride

Several potential soil cleanup levels were recalculated using the updated toxicity factors and, when applicable, the new mutagenic calculation for cancer-based cleanup levels where an early-life exposure is possible. These included the following:

- USEPA RSLs for residential and industrial direct contact exposure
- Recalculated MTCA three-phase model for unsaturated soils

The MTCA three-phase model cleanup level for soil was recalculated because it assumes partitioning between soil, soil vapor, and groundwater. The applicable groundwater cleanup level utilized in the calculation was the USEPA RSL, which was updated; therefore, the MTCA three-phase cleanup level was also recalculated. The MTCA three-phase model resulted in the lowest soil cleanup level and was selected as the updated soil TMCL.

Based on the updated toxicity factors, the methylene chloride soil TMCL increased from 0.65 mg/kg to 2.4 mg/kg.

2.2.3 Air TMCLs for Methylene Chloride

Ambient air cleanup levels were recalculated using the updated toxicity factors as follows:

- USEPA RSLs for residential ambient air exposure was recalculated using updated toxicity factors and, for the cancer risk RSL, the new mutagenic calculation for cancer-based cleanup levels where an early-life exposure is possible.
- USEPA RSLs for industrial ambient air exposure was recalculated using only the updated toxicity factors.

Because Plant 2 is a USEPA-run site, USEPA RSLs were selected as the proposed ambient air TMCLs.

Based on the updated toxicity factors, the methylene chloride ambient air TMCLs for each pathway are as follows:

- Methylene chloride residential air TMCL increased from 5.2 µg/m^3 to 96 µg/m^3.
- Methylene chloride industrial air TMCL remains 260 µg/m^3.

2.3 TCE

USEPA and Ecology have updated toxicity factors for TCE consistent with the IRIS toxicity factor update. The CLARC database has not yet been updated with the toxicity factors; however, an update is in progress and Ecology has published guidance indicating which toxicity factors should be used to calculate groundwater, soil, and air cleanup levels as a result of the IRIS toxicity factor updates (Ecology 2012).

The new IRIS toxicity values include updated toxicity factors for three kinds of cancer: kidney tumors, non-Hodgkin lymphoma, and liver cancer. Kidney cancer was found to operate through a mutagenic mode of action; therefore, where early-life exposure is possible, residential calculations make use of age-dependent adjustment factors due to the increased risk to children. These calculations also include contributions from liver cancer and non-Hodgkin lymphoma (which do not operate through a mutagenic mode of action) by taking the harmonic sum of the three types of the calculated cancer cleanup levels.

More detailed information on early life exposure age dependent adjustment factors and other parameters necessary to perform cancer-based calculations may be found in the final guidance published in the screening level tables available on the USEPA Regions 3 and 9 websites (http://www.epa.gov/reg3hwmd/risk/human/rb-concentration_table/faq.htm#FAQ18 and USEPA 2012, respectively) and in Ecology's TCE and PCE guidance. Additional guidance pertaining to USEPA recommendations regarding TCE toxicity (refer to Attachment 1), particularly with respect to non-cancer pathways, was reviewed for consistency with the calculations described in this memo. Several important differences between the attached USEPA guidance and Boeing's calculations of screening levels should be noted:

- USEPA has agreed to the use of a modified industrial worker exposure scenario for Plant 2, wherein the soil ingestion rate has been modified to 200 mg/day rather than 100 mg/day and the cancer risk factor was modified to 1 in 100,000 rather than 1 in 1,000,000.
- The use of a target hazard quotient of 1 was selected by USEPA for calculation of non-cancer screening levels at Plant 2 and was used in calculations in the TMCL Tech Memo.

Therefore, rather than using the USEPA Region 10 Recommended Concentrations of TCE in Standard Environmental Media (printed in Table 1 of Attachment 1), screening levels appropriate for Plant 2 were calculated using the appropriate equations, toxicity values, and modified parameters as described above.

The updated toxicity factors utilized in USEPA and Ecology calculations are presented in the tables below for both cancer and non-cancer cleanup level calculations.

Table 3
USEPA Updated TCE Cancer Toxicity Factors

Toxicity Factor Type	Original	No Early-life Exposure	Early-life Exposure Possible	
		Updated	**Updated** Mutagenic (Kidney Cancer)	**Updated** Non-mutagenic (Liver Cancer and non-Hodgkin Lymphoma)
CPF_o (kg-day/mg)	0.13	0.046	0.0093	0.037
IUR (m^3/µg)	2.0E-5	4.8E-6	1.0E-6	3.1E-6

Abbreviations:
- CPF_o Oral cancer potency factor
- IUR Inhalation unit risk factor
- TCE Trichloroethylene

Table 4
Ecology Updated TCE Cancer Toxicity Factors

Toxicity Factor Type	Original	No Early-life Exposure	Early-life Exposure Possible		
		Updated	**Updated** Mutagenic (Kidney Cancer)	**Updated** Non-mutagenic (Liver Cancer)	**Updated** Non-mutagenic (non-Hodgkin Lymphoma)
CPF_o (kg-day/mg)	0.089	0.0464	0.00933	0.0155	0.0216
CPF_i (mg/kg-day)	NA	0.0144	0.0035	0.0035	0.0070

Note:
1. Ecology has determined that the MTCA Method B residential surface water cleanup level does not have a mutagenic mode of action despite the possibility of early-life exposure; therefore, use the toxicity factors in the "No Early-life Exposure" column to calculate cleanup levels for this pathway.

Abbreviations:
- CPF_o Oral cancer potency factor
- CPF_i Inhalation cancer potency factor
- Ecology Washington State Department of Ecology
- MTCA Model Toxics Control Act
- NA Not applicable
- TCE Trichloroethylene

Table 5
Updated TCE Non-cancer Toxicity Factors

Toxicity Factor Type	USEPA		Ecology	
	Original	Updated	Original	Updated
RfD_o (mg/kg-day)	0.0003	0.0005	0.0003	0.0005
RFC_i (mg/m^3)	10	0.002	NA	NA
RFD_i (mg/kg-day)	NA	NA	NA	5.7E-04

Abbreviations:
NA Not applicable in the approach used
RFC_i Inhalation reference concentration
RFDi Inhalation reference dose
RFD_o Oral reference dose
TCE Trichloroethylene

The TMCLs that were updated as a result of these new toxicity factors are described below.

2.3.1 Groundwater TMCL for TCE

Several potential groundwater cleanup levels were recalculated using the updated toxicity factors. These included the following:

- Surface water cleanup levels that are protective of the seafood consumption exposure pathways, including:
  - USEPA calculations for surface water concentrations protective of tribal seafood consumers
  - MTCA calculations for surface water concentrations protective of recreational fisherman and Asian/Pacific Islander fish consumers
- USEPA RSLs for tap water
- MTCA Method B groundwater cleanup level to protect drinking water use

The calculated surface water cleanup levels that are protective of the seafood consumption exposure pathways continue to be used as the Plant 2 TMCL for TCE; however, the numeric value has changed due to the updated toxicity factors.

Based on the updated toxicity factors, the revised TCE groundwater TMCL increased from 0.51 µg/L to 1.4 µg/L.

2.3.2 Soil TMCL for TCE

Soil cleanup levels were recalculated using the updated toxicity factors. These included the following:

- USEPA RSLs for residential and industrial direct contact exposure.
- MTCA Method B and Method C for residential and industrial direct contact exposure.

- MTCA three-phase model for unsaturated soils. This cleanup level is calculated for soil assuming partitioning between soil, soil vapor, and groundwater. The equation does not directly use individual toxicity factors but does include a groundwater cleanup level as part of the calculation; therefore, these results have been updated because the groundwater cleanup levels have been updated, as discussed above.

In addition to the recalculation of these cleanup levels, cleanup levels protective of a new sub-chronic exposure pathway were also considered. The sub-chronic exposure pathway is only for TCE and considers potential mutagenic effects on an unborn fetus during 3 weeks of the first trimester of pregnancy. Instructions on the use of this pathway were received from Dr. Marcia Bailey from USEPA Region 10; the sub-chronic calculation and its development are explained in Attachment 1.

The MTCA three-phase model resulted in the lowest cleanup level; therefore, it was selected as the proposed soil TMCL.

Based on the updated toxicity factors, the TCE soil TMCL increased from 0.018 mg/kg to 0.051 mg/kg.

2.3.3 Air TMCLs

Ambient air cleanup levels were recalculated using the updated toxicity factors. These included:

- USEPA RSLs for residential and industrial exposure
- MTCA Method B and Method C for residential and industrial exposure

In addition to the recalculation of cleanup levels to protect pathways previously evaluated in the TMCL Tech Memo, cleanup levels protective of the new sub-chronic exposure pathway were considered. As with the soil TMCL, the TCE sub-chronic exposure pathway considers potential mutagenic effects on an unborn fetus during 3 weeks of the first trimester of pregnancy. Instructions on the use of this pathway were received from Dr. Marcia Bailey from USEPA Region 10.

Because Plant 2 is a USEPA-run site, the lowest USEPA RSL was selected as the proposed ambient air TMCL for industrial and residential exposure pathways. The USEPA RSL protective of cancer risk was selected as the residential air TMCL, while the USEPA RSL protective of sub-chronic exposure to a pregnant woman was selected as the industrial air TMCL.

Based on the updated toxicity factors, the ambient air TMCLs for each pathway are as follows:

- TCE residential air TMCL increased from 0.12 $\mu g/m^3$ to 0.43 $\mu g/m^3$.
- TCE industrial air TMCL increased from 6.1 $\mu g/m^3$ to 8.4 $\mu g/m^3$.

3.0 TMCLS REVISED TO REFLECT CURRENT TOXICITY FACTORS

During the TMCL development process completed in 2010 and 2011, a variety of different exposure pathways and regulatory criteria were evaluated for protection of human health and aquatic organisms. Among these criteria were the federal National Toxics Rule (NTR) and federal Ambient Water Quality Criteria (AWQC) criteria for the protection of human health for the consumption of fish and shellfish in marine waters. The federal NTR was promulgated on July 6, 1989, and has not been updated since that time. The federal AWQC was adopted in 1980 and has been periodically updated as new toxicity data becomes available. When selecting cleanup levels, the lowest of these and other Applicable or Relevant and Appropriate Requirements (ARARs) for the site being evaluated is typically selected. When this process was completed for Plant 2 in 2011, the resulting TMCL for 1,1-DCE was selected based on the federal NTR. The TMCL has a numeric value of 3.2 µg/L; however, this value is based on toxicity data that were current in 1989, which was later revised in 2002.

3.1 Impact of Updating Toxicity Factors to Decrease Risk

Occasionally, as more research is conducted into the toxicity of specific chemicals via specific pathways and receptors, toxicity factors for individual chemicals are updated to increase or decrease the previously accepted toxicity factors for those chemicals, causing risk-based cleanup levels to decrease or increase, respectively, in response. Many cleanup levels, like the federal AWQC and USEPA RSLs, are updated regularly or may be recalculated when new toxicity information is available. However, the federal NTR is promulgated and has not been updated to reflect toxicity information available after 1989.

When the updated information indicates that the chemical is more toxic than previously thought, the problem caused by the update is generally self-correcting because the other ARARs allow for frequent or automated revision. When the lowest of the ARARs are selected, the newer cleanup level (which relies on updated toxicity information) is selected and the cleanup level remains protective. However, when the chemical is discovered to be less toxic that previously thought, the failure to update the federal NTR means that the federal NTR (which utilizes out-of-date toxicity information) is likely to become the lowest of the ARARs, and may be selected as the cleanup level. This is what happened at Plant 2 for 1,1-DCE.

Toxicity data in IRIS were revised for 1,1-DCE in 2002 to: modify the RfD_o from 0.009 to 0.05 mg/kg-day; determine a new RFC_i of 0.2 mg/m^3; and, most significantly, to determine that there is not sufficient evidence that 1,1-DCE is a carcinogen. This conclusion differed from USEPA's previous assessment, made in 1987, which relied on suggestive evidence from a single study to assign an oral slope factor. Accordingly, the current toxicological profile for 1,1-DCE does not contain an oral slope factor. The federal AWQC was subsequently revised in 2003 to incorporate the revised toxicity information.[1] The current federal AWQC is 7,100 µg/L, more than two orders of magnitude greater than the federal NTR. Similarly, the lowest of the tribal and Asian/Pacific Islander exposure scenarios that was calculated in the TMCL Tech Memo, and which uses the revised toxicity information, is 2,300 µg/L.

Though 1,1-DCE is the only constituent whose TMCL was impacted by outdated toxicity information implicit in the federal NTR, there are other constituents whose current AWQC has

[1] The USEPA RSL and the MTCA Cleanup Levels also rely on the current (2002) toxicity information and do not consider the withdrawn 1987 information.

increased relative to the federal NTR as a result of toxicity factors being reduced relative to their previous values; isophorone, which was not evaluated as a constituent of potential concern (COPC) at Plant 2, is one such example. These other chemicals were not identified as constituents requiring TMCLs at Plant 2, but the following recommendation would apply to these constituents as well had problematic TMCLs been developed as a result of this issue.

3.2 Recommendation for Cleanup Levels Based on the Federal NTR

Boeing recognizes the importance of ensuring that cleanup levels are based on the most up to date toxicity information available. When toxicity factors have been updated for a constituent to reflect current toxicological knowledge, Boeing requests that USEPA acknowledge that the NTR is no longer considered current and should not be selected as the cleanup level for that constituent, even if it is lower than the federal AWQC or other ARARs. At Plant 2, this acknowledgement impacts the TMCL selected for 1,1-DCE. After the federal NTR, the next lowest ARAR is the lowest of the tribal and Asian/Pacific Islander exposure scenarios, which should become the new TMCL for 1,1-DCE.

Based on the current toxicity factors, the new groundwater TMCL for 1,1-DCE should be 2,300 µg/kg, which is protective of surface water quality and tribal seafood consumers.

4.0 TMCLS REVISED DUE TO RSL UPDATES: VINYL CHLORIDE

The residential and industrial soil USEPA RSLs for vinyl chloride were updated by USEPA (Region 3) after the approval of the TMCL Tech Memo. The RSL calculation for vinyl chloride, a mutagen, was complicated and neither USEPA nor Floyd|Snider were able to duplicate the calculation in 2011; nevertheless, the RSL value as published on the Region 3 USEPA website in late winter of 2011 was used in the TMCL Tech Memo. This value was three orders of magnitude lower than the MTCA residential value and less than the value that we calculated using the equations and parameters provided.

Since that time, the RSL has been updated/revised on the Region 3 USEPA website (the official home of the RSL tables). We were able to duplicate this calculation using the formula and parameters provided (http://www.epa.gov/reg3hwmd/risk/human/rbconcentration-table/usersguide.htm). The revised residential RSL for vinyl chloride changed from 0.000081 mg/kg to 0.06 mg/kg based on recalculation; the revised RSL calculation also utilizes the current IRIS toxicity values for vinyl chloride.

Toxicity Factor Type	Used in Vinyl Chloride Recalculation
CPF_o (kg-day/mg)	0.72
IUR (m3/µg)	4.4E-06

The recalculation of the vinyl chloride residential RSL causes the TMCL to shift from the residential RSL to the soil to protect groundwater pathway cleanup level of 0.034 mg/kg.

Based on the revised RSL tables and IRIS toxicity factors, the new soil TMCL for

vinyl chloride is 0.034 mg/kg.

The Industrial RSL was also recalculated by USEPA and changed from 0.0041 mg/kg to 1.7 mg/kg. When the calculation is performed using site-specific exposure assumptions and parameters, the revised industrial RSL applicable to Plant 2 is 12 mg/kg. This value replaces the previous industrial RSL for cancer risk and may be considered during the development of FMCLs for the Industrial Risk Management Area.

5.0 TMCLS REVISED TO CORRECT INAPPROPRIATE BIOCONCENTRATION FACTOR: BARIUM

During the development of TMCLs for Plant 2 in 2010 and 2011, several metals were added as potential constituents of concern (referred to in that document as COCs) that had not been historically included in the COC list for Plant 2. In the process of using these TMCLs in the Corrective Measures Study, we found that an error had occurred in the development of the TMCL for barium. This error results in groundwater throughout the site as being greater than the TMCL (i.e., out of compliance) when there is no known release of barium at Plant 2.

5.1 The Barium BCF Error

The TMCL for barium that was developed for Plant 2 in 2011 was based on the tribal fish consumption pathway, using a BCF of 633 L/kg, taken from the USEPA guidance document *Human Health Risk Assessment Protocol for Hazardous Waste Combustion Facilities* (USEPA 2005a), which selected metals BCF values from the *Screening Level Ecological Risk Assessment Protocol for Hazardous Waste Combustion Facilities* (USEPA 1999). As described in Appendix C of the USEPA 1999 document, the barium BCF is based "on the arithmetic mean of the recommended values for 14 inorganics with empirical data available (aluminum, antimony, arsenic, beryllium, cadmium, chromium, copper, lead, mercury, nickel, selenium, silver, thallium, and zinc)." That is, <u>the BCF used to calculate the barium TMCL was not based on barium-specific data at all</u>; this is especially alarming because the metals used to "estimate" the BCF are transition metals with very different chemical properties than barium.

Barium is an alkaline earth metal (like calcium and magnesium) that occurs in nature as a divalent cation in combination with other elements. The oral toxicity of barium in animals and humans is slight to moderate; barium is not carcinogenic. The most current environmental reviews of barium and its compounds were performed by the Agency for Toxic Substances and Disease Registry (ATSDR) in 2007, USEPA IRIS in 2005 (USEPA 2005b), and included a previous review by World Health Organization (WHO) in 2001.

There are no promulgated surface water criteria for barium. Available studies are limited, as discussed in the above references, but the limited studies indicate only slight toxicity to aquatic species (i.e., LC_{50} > 500,000 µg/L in sheepshead minnow; WHO 2001).

Barium at high concentrations can be toxic in humans. The state and federal drinking water standard maximum contaminant level (MCL) for barium is 2,000 µg/L; the typical concentration of barium in tap water in the United States is 430 µg/L (Durfor and Becker 1964; as cited in reviews by USEPA, ATSDR, and WHO).

More recent reviews by USEPA and others have found a limited number of studies that measured BCFs for barium in either freshwater or marine fish. USEPA Region 5 lists barium as unlikely to bioaccumulate (based on Moore 1991). USEPA's Risk Assessment Information System (RAIS) presents a BCF of 4 L/kg, originally sourced from the User's Manual for RESRAD Version 6 (USDOE 2001); however, the derivation of this BCF is not clear to us. The BCF of 4 L/kg has been used in other risk assessments as the BCF for barium, including at Loring Air Force Base (HAZWRAP 1994). The table describing the selection of the BCF for barium references a 1988 study performed by Barnthouse et al.

ATSDR's 2007 review found only two studies with estimated BCFs: Schroeder (1970) listed the BCF as 100 L/kg for marine animals (as opposed to plants) and Hope et al. (1996) determined the BCF for freshwater fish to be 129 L/kg.

Based on these studies the BCF for barium is between 4 and 129 L/kg. There is no justification for the use of 633 L/kg value, which is based on the average of BCFs from other unrelated metals.

5.2 Recommendation for Barium

In light of the technical information presented above, it is recommended that the existing TMCL for barium be rejected in favor of a revised TMCL calculated using a BCF of 100 L/kg (based on the available measured barium BCFs of 4, 100, and 129 L/kg expressed to one significant figure). The resulting barium groundwater TMCL would be 770 µg/L. For comparison purposes, this concentration is less than the federal drinking water standard of 2,000 µg/L and slightly greater than the typical tap water concentration of barium of 430 µg/L.

Note that this recommendation also impacts the soil TMCL for barium. The soil TMCL is based on the soil to protect surface water pathway. The new barium soil TMCL, calculated using the revised BCF, would be 640 mg/kg. For comparison, the lowest promulgated residential criterion is 15,000 mg/kg, and the mean barium soil concentration in naturally occurring soils ranges between 265 and 835 mg/kg, depending on soil type (ATSDR 2007).

Based on the updated BCF for barium, the revised TMCLs in soil and groundwater are as follows:

- Barium groundwater TMCL increases from 120 µg/L to 770 µg/L.
- Barium soil TMCL increases from 99 mg/kg to 640 mg/kg.

6.0 NARRATIVE CRITERIA TO ACCOMPANY NUMERIC ALUMINUM TMCL

During the development of TMCLs for Plant 2 in 2010 and 2011, several metals were added as COPCs for groundwater. Some groundwater data were available for these metals, but the data had not been evaluated with respect to cleanup criteria because these metals were not site-wide COPCs for groundwater. Aluminum is one of these metals, which had previously been considered ubiquitous and of low toxicity; therefore, aluminum was not evaluated as a COPC in any of the previous data gap investigation documents produced at Plant 2.

In 2011, a groundwater TMCL was developed for aluminum without consideration of its geochemistry and natural occurrence. Groundwater TMCLs at Plant 2 were developed by USEPA based on the maximum beneficial use of groundwater being protection of surface water quality in the Lower Duwamish Waterway. State and federal standards and criteria for the protection of aquatic species and human health through the consumption of seafood were tabulated,[2] along with an additional tribal seafood consumption scenario. The tribal scenario used the MTCA fish consumption equations in Washington Administrative Code (WAC) 173-340-730 with a tribal fish consumption rate developed by USEPA and the tribes for the Lower Duwamish Waterway.

This resulted in a groundwater TMCL for aluminum of 87 µg/L, based on protection of aquatic species in fresh water. This is an appropriate TMCL for use in fresh surface water; however, this value is problematic when applied to groundwater as measured in newly installed wells and in direct-push probe samples. Therefore, Boeing feels it is necessary to document narrative criteria pertaining to aluminum sampling and analysis methods. The goal of this documentation is to ensure that the aluminum TMCL is not misapplied to the groundwater data that do not accurately represent the groundwater at Plant 2 that is reaching the surface water of the Lower Duwamish Waterway.

6.1 Aluminum Geochemistry and Sampling Implications

Aluminum is an abundant, naturally occurring metallic element and constitutes approximately 8 percent of the Earth's crust. It occurs naturally in the environment in many types of common minerals such as silicates, oxides, and hydroxides, combined with other elements, such as sodium and fluoride, and as complexes with organic matter. Aluminum is released to the environment predominantly by natural processes, such as weathering of common feldspar minerals and micas to form alumino-silicate clay minerals. The clay fraction of soil in the Lower Duwamish Valley is an alumino-silicate clay mineral (Poppof 1945; LDWG 2010).

The literature on aluminum occurrence and transport in groundwater is replete with discussions of the difficulty in obtaining accurate measurements of aluminum concentrations in groundwater. The installation of wells and direct-push probes disturbs the clay fraction of soil and re-suspends aluminum in groundwater as a fine colloid that passes through the standard 0.45 micron filter used to distinguish total from dissolved aluminum. For this reason, experts in aluminum groundwater chemistry use a 0.1 micron filter or use groundwater wells that have been allowed to “rest” and return to undisturbed conditions between installation and sampling.

At Plant 2, the aluminum groundwater data from wells and the aluminum groundwater data from direct-push probes are very different. The histogram below shows the number of samples from groundwater wells and direct-push probes in the A-Level of the aquifer falling into each of the discrete intervals designated on the abscissa. The labels on the abscissa correspond to the maximum of the interval.

[2] Background values were also developed for arsenic, copper, and manganese. These background values were approved by USEPA in 2006 (Floyd|Snider 2005; USEPA 2006).

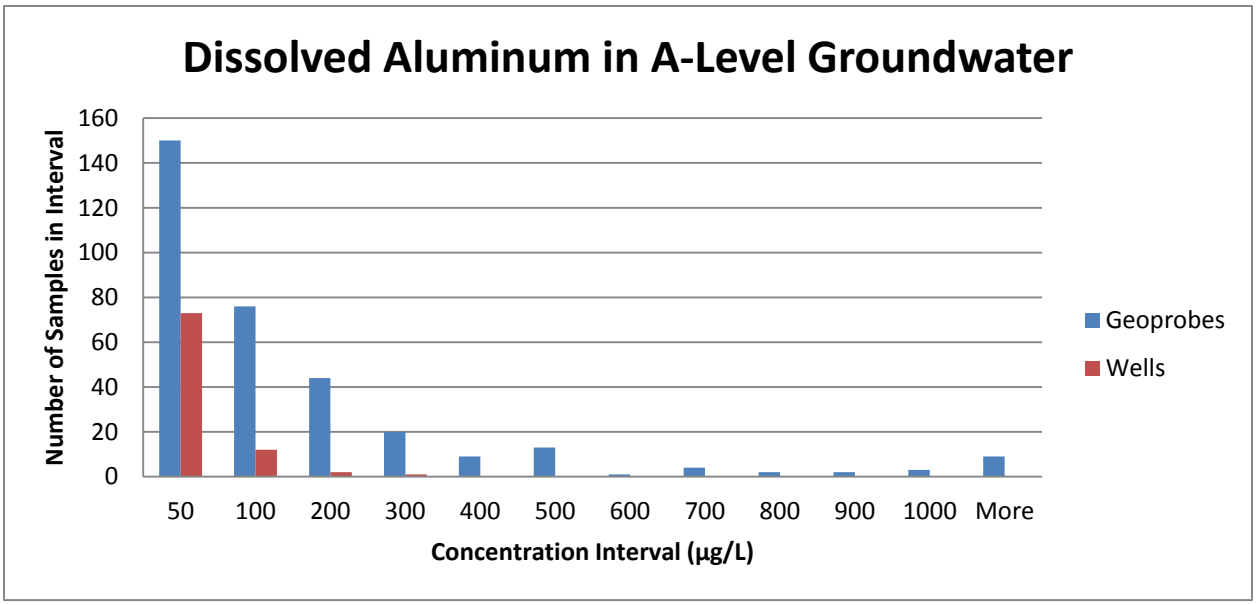

Detection limits of 50, 100, and 200 µg/L were used in the different rounds of sampling. In groundwater wells the majority of the aluminum data are non-detects at the detection limit. In the direct-push probe samples, the results are highly variable, with detections commonly ranging between 100 and 1000 µg/L. Spatial analysis of the data indicates that there is no agreement between the aluminum concentrations detected in direct-push probe samples and those of nearby well samples.

6.2 Recommendation for Aluminum

The TMCL for aluminum in groundwater remains 87 µg/L, but with the following stipulations, which Boeing proposes modify the TMCL as narrative criteria:

1. Compliance data should be collected only from properly constructed groundwater wells that have been installed, developed, and allowed to return to undisturbed conditions for at least 6 weeks prior to sampling.
2. Groundwater purging and sampling will be accomplished with low-flow techniques. Turbid (i.e., >5 nephelometric turbidity units [NTU]) samples (rare in the Shoreline Wells) will not be used for aluminum analysis.
3. Any future groundwater sampling and analysis for aluminum should be filtered in the field with a 0.1 micron filter, rather than the standard 0.45 micron filter.

The aluminum data that Boeing has collected from direct-push probe samples should be rejected; only groundwater data collected from wells should be used to assess whether aluminum is a COC for Plant 2 in groundwater.

If aluminum is retained as a groundwater COC, but found to be in compliance in the new Shoreline Monitoring Well Network during the first four rounds of compliance sampling, using these stipulations, aluminum will be dropped as a groundwater COC for Plant 2. If appropriate, aluminum may be dropped as a groundwater COC in the Corrective Measures Report based on a review of the existing aluminum data.

7.0 REFERENCES

Agency for Toxic Substance and Disease Registry (ATSDR). 2007. *Toxicological Profile for Barium and Barium Compounds.* Available online at: http://www.atsdr.cdc.gov/ToxProfiles/tp.asp?id=327&tid=57

The Boeing Company (Boeing). 2011. *Target Media Cleanup Levels Technical Memorandum.* Prepared for the USEPA. Seattle, Washington. 26 May.

Barnthouse, L.W., J.E. Breck, T.D. Jones, G.W. Suter II, C. Easterly, L.R. Glass, B.A. Owen, and A.P. Watson. 1988. *Relative toxicity estimates and bioaccumulation factors for the Defense Priority Model.* ORNL-6416. Oak Ridge National Laboratory, Oak Ridge, Tennessee.

Durfor CN and Becker E. 1964. Public water supplies of the 100 largest cities in the United*States, 1962.* U.S. Department of the Interior, U.S. Geological Survey. Washington, DC: U.S. Government Printing Office. Water-Supply 1812.

Hazardous Waste Remedial Actions Program (HAZWRAP). 1994. *Loring Air Force Base Risk Assessment Methodology.* Prepared by Martin Marietta Energy Systems, Inc. for the U.S. Department of Energy. August.

Hope B, Loy C, Miller P. 1996. Uptake and trophic transfer of barium in a terrestrial ecosystem. Bulletin of Environmental Contamination and Toxicology 56:683-689.

Lower Duwamish Waterway Group (LDWG). 2010. *Final Lower Duwamish Waterway Remedial Investigation, Remedial Investigation Report.* Prepared by Windward Environmental, LLC, Seattle, Washington. Prepared for The US Environmental Protection Agency, Seattle, Washington and The Washington State Department of Ecology, Bellevue, Washington. 9 July.

Moore, J. W. 1991. *Inorganic Contaminants of Surface Waters, Research and Monitoring Priorities.* Springer-Verlag, New York

Popoff, C.C. 1945. Green River High-alumina Clay Deposits, Project # 1202, King County, Washington: U.S. Bureau of Mines War Minerals Report Volume 18. (open file), 21 p. plus 34 p. of analyses.

Schroeder HA. 1970. Barium. *Air Quality Monograph.* American Petroleum Institute. Washington, DC: Air Quality Monograph No. 70-12.

Sposito, Garrison, ed. *The Environmental Chemistry of Aluminum*. 2nd ed. Lewis Publishers, 1995.

U.S. Department of Energy (USDOE). 2001. User's Manual for RESRAD Version 6. Available online at: http://web.ead.anl.gov/resrad/documents/resrad6.pdf.

U.S. Environmental Protection Agency (USEPA).1999. Screening Level Ecological Risk Assessment Protocol for Hazardous Waste Combustion Facilities. Volume One. Peer Review Draft. August. EPA/530/D-99/001A.

———. 2005a. *Human Health Risk Assessment Protocol for Hazardous Waste Combustion Facilities*. September. EPA/530/R-05/006

———.2005b. *Toxicological Review of Barium Compounds*. In Support of Summary Information on the Integrated Risk Information System (IRIS). Originally published March 1998, Revised June 2005. EPA/635/R-05/001.

———. 2012. Pacific Southwest Region 9. "Regional Screening Levels (Formerly PRGs)." <http://www.epa.gov/region9/superfund/prg/>Last updated 05 June.

Washington State Department of Ecology (Ecology). 2012. CLARC Guidance, Trichloroethylene. "Trichlororethylene Toxicity Information and MTCA Cleanup Levels (TCE), CAS #79-01-6." <https://fortress.wa.gov/ecy/clarc/FocusSheets/TCE%20PCE%20Oct%202004%20Final.pdf> September.

World Health Organization (WHO). 2001. Concise International Chemical Assessment *Document (CICAD) 33: Barium and Barium Compounds.* International Programme on Chemical Safety. Available online at: http://www.bvsde.ops-oms.org/bvsacg/e/cd-cagua/guias/b.parametos/4.BasTox/IPCS/011.barioEHC/02.barioCICAD.pdf

Encl.: Attachment 1

Attachment 1
OEA Recommendations Regarding Trichloroethylene Toxicity in Human Health Risk Assessments

UNITED STATES ENVIRONMENTAL PROTECTION AGENCY
REGION 10
1200 Sixth Avenue, Suite 900
Seattle, WA 98101-3140

DEC 13 2012

OFFICE OF
ENVIRONMENTAL ASSESSMENT

MEMORANDUM

SUBJECT: OEA Recommendations Regarding Trichloroethylene Toxicity in Human Health Risk Assessments

FROM: Joyce C. Kelly, Director
Office of Environmental Assessment

TO: Rick Albright, Director
Office of Environmental Cleanup

Kate Kelly, Director
Office of Air, Waste & Toxics

This memorandum supersedes previous communications from this office regarding the selection of toxicity values for trichloroethylene (TCE) in human health risk assessments, including a September 23, 2008 memorandum from me to Dan Opalski, then the director of the Office of Environmental Cleanup (ECL). We also have communicated our recommendations in recent years to each of the four states in Region 10, as we will do with these new recommendations. Please share the information in this memorandum with your staff who are involved with the investigation or cleanup of RCRA or CERCLA sites, where TCE is a common chemical of concern.

We previously had a need to make recommendations regarding TCE toxicity because there were various available values from different sources, but none on the EPA Integrated Risk Information System (IRIS), typically the preferred source of toxicity information for EPA. EPA's Office of Research and Development (ORD) finalized its toxicological review of TCE in 2011, and IRIS was updated in October of that year with values for chronic oral and inhalation exposures to TCE. This office recommends that the values now available on IRIS for chronic TCE exposures be utilized for risk assessment purposes in Region 10. We would like to take this opportunity to point out that media concentrations of TCE that are based on chronic exposures, noncancer endpoints and a hazard quotient of 1 should be given special attention, as the hazard quotient may be exceeded at media concentrations that are calculated to represent individual excess lifetime cancer risks of 1E-4 and 1E-5. The precise concentrations will depend upon the media and the exposure scenarios of concern. Examples are provided in Table 1 of this memorandum.

There remains one exposure issue that is not resolved on IRIS regarding TCE, although it is our understanding that OSWER is attempting to formally do so by consulting with ORD and other EPA program offices. Because there is a current need to address this exposure issue at numerous CERCLA and RCRA waste sites in Region 10, we have decided that it is prudent for this office to make recommendations regarding this exposure, while waiting for OSWER to issue guidance on the matter. This is the primary subject of the rest of this memorandum.

Pursuant to the October 2011 IRIS Toxicological Review for TCE, the noncancer outcomes used for deriving the inhalation reference concentration (RfC) and oral reference dose (RfD) are based in part on immunotoxic and developmental effects, including fetal cardiac malformations that may occur when the mother is exposed to TCE during a 21-day early gestation window. Information on IRIS and in the Toxicological Review does not provide a specific methodology to estimate protective media concentrations for this window of vulnerability. Region 10 human health toxicologists have determined that, to protect against potential noncancer fetal malformation outcomes, it is appropriate to recommend that average exposures over any 21-day period of time not exceed the concentrations in air or other media that are calculated to be protective for this exposure, using the RfD and RfC provided in IRIS.

In order to calculate a health-protective TCE concentration for indoor air in a residential setting, the default Superfund chronic scenario assumes exposure of 24 hours per day, 350 days per year, which provides for a period of absence of two weeks per year. This yields a noncancer TCE concentration of 2.1 $\mu g/m^3$, representing a hazard quotient of 1.0.[1] For short-term exposure concerns (i.e., to protect against fetal cardiac malformations) during any 21-day period of time in a given year, the exposure frequency should be adjusted to 365 days per year, resulting in a calculated concentration of 2.0 $\mu g/m^3$.

For calculation of a protective concentration of TCE in indoor air in a commercial/industrial setting, the default Superfund chronic scenario assumes 8 hours/day, 5 days/week, 250 days per year, which like the default residential calculation assumes an absence of two weeks during a year. The chronic indoor air concentration representing a hazard quotient of 1.0 for this scenario is 8.8 $\mu g/m^3$.[2] For the short-term exposure concern, when women of reproductive age may be present at any time, the exposure frequency should be increased to 260 days per year to eliminate the assumption that there is a yearly two-week absence, since any given 21-day period is to be protective. This results in an indoor air criterion of 8.4 $\mu g/m^3$ representing a hazard quotient of 1.0. If the exposure time and frequency at a given commercial/industrial building is known to be other than the default Superfund assumption of 8 hrs/day, 5 days/week, 250 days/year, additional adjustments may be made in the calculation of building-specific, short-term exposure concentrations, just as they also may be made for the calculation of the building-specific chronic exposure concentrations.

To calculate short-term, noncancer TCE concentrations for other exposure media, Superfund default exposure-related variables should be changed, where necessary, to include adult-only values (e.g., exposure frequencies and durations, body weights, soil and other media ingestion rates, and dermal surface areas exposed), with no assumed hiatus times (i.e., no assumed vacations or other absences).

This office recommends that media TCE concentrations calculated for the noncancer, short-term scenario to protect against fetal heart malformations be considered as not-to-be-exceeded concentrations, as averaged over any 21-day period of time, when women of reproductive age

---

[1] The air TCE screening level concentration representing an individual excess lifetime cancer risk of 1E-6 is 0.43 ug/m3 for the default residential exposure scenario.

[2] The air TCE screening level concentration representing an individual excess lifetime cancer risk of 1E-6 is 3.0 ug/m3 for the default commercial/industrial exposure scenario.

Printed on Recycled Paper

may be exposed. If such concentrations are exceeded, measures to expeditiously reduce exposure should be considered.

The available scientific information does not allow for a determination of whether transient spikes in TCE exposures during a 21-day window of early gestation vulnerability may result in fetal heart malformations, when average media exposure concentrations during that window are not exceeded. If there is evidence that such media excursions may be occurring, they should be considered a qualitative, nonconservative uncertainty for risk assessment and risk management purposes.

EPA Region 10 generally recommends that media screening levels for chronic exposures be based on the lower of 1E-6 individual excess lifetime cancer risk or a hazard quotient of 0.1 (protective where there are multiple chemicals with similar chronic noncancer effects). The chronic cancer and noncancer screening concentrations in TCE-contaminated media are screening levels for risk assessment purposes. The short-term media concentrations of TCE should be considered separately, as appropriate to the exposure situation.

Table 1 below contains recommended cancer and noncancer screening concentrations for TCE in air, drinking water and soil using default Superfund exposure assumptions for chronic cancer and noncancer exposures, and recommended noncancer, not-to-be-exceeded concentrations for short-term, exposure scenarios when women of reproductive age may be present.

If you have any questions or comments on the issues discussed in this memorandum, please contact Dr. Marcia Bailey of the Risk Evaluation Unit in this office at (206) 553-0684 or bailey.marcia@epa.gov.

Printed on Recycled Paper

Table 1. EPA Region 10 Recommended Media Concentrations of TCE in Standard Environmental Media for Use at Superfund and RCRA Waste Sites

		Cancer risk of 1x10-6 from EPA Regional Screening Level Tables[1]	Chronic noncancer, from EPA Regional Screening Level Tables, adjusted to a hazard quotient of 0.1 [2]	Short-term noncancer Not to be exceeded, average 21-day exposure to women of reproductive age to prevent fetal cardiac malformations HQ=1.0
Residential	Drinking water	0.44 µg/L	0.26 µg/L	3.4 µg/L
	Soil	0.91 mg/kg	0.44 mg/kg	4.7 mg/kg
	Air	0.43 µg/m3	0.21 µg/m3	2.0 µg/m3
Commercial/ Industrial	Drinking water[3]			
	Soil	6.4 mg/kg	2.0 mg/kg	19.2 mg/kg
	Air	3.0 µg/m3	0.88 µg/m3	8.4 µg/m3

[1] Updated twice per year; available at http://www.epa.gov/reg3hwmd/risk/human/rb-concentration_table/index.htm

[2] Use of a hazard quotient of 0.1 for screening purposes is intended to prevent elimination of chemicals of concern for further inclusion when doing so may result in an inadvertent exceedance of a hazard index of 1.0. Use of a screening level hazard quotient of 1.0 is acceptable at a site when there are few contaminants of concern with similar noncancer outcomes being evaluated. In that case, multiply the concentrations in this column by 10.

[3] While EPA does not provide regional screening levels for industrial/commercial drinking water, it may be desirable, on a site-specific basis, to do so to account for short-term exposures to women of reproductive age. Otherwise, the residential drinking water value may be used.

Printed on Recycled Paper

References

U.S. Environmental Protection Agency (1991). Human Health Evaluation Manual, Supplemental Guidance: Standard Default Exposure Factors. Washington, DC, Office of Emergency and Remedial Response. http://www.epa.gov/oswer/riskassessment/pdf/oswer_directive_9285_6-03.pdf

U.S. Environmental Protection Agency (2011). IRIS Toxicity Profile for Trichloroethylene (CASRN 79-01-6). Washington DC, USEPA. http://www.epa.gov/iris/subst/0199.htm

cc: Helen Dawson, OSWER
Allyn Stern, R10 ORC

Printed on Recycled Paper

EPA May 31, 2011 Acceptance of May 26, 2011 Boeing Plant 2 TMCL Technical Memorandum

From:	Ernst, William D
To:	"ted_norton@golder.com"; Doug Kunkel; Teri A. Floyd; "Kent M. Angelos"
Cc:	dcrawford@golder.com; "Matthees, Scott"; Emily Santee; Gleason, Michael J
Subject:	PL2 - FW: Extension requested granted and TMCLs filed.
Date:	Monday, June 06, 2011 6:27:16 AM
Attachments:	Re FW Plant 2 - CMS report format and outline meeting needed.msg

---

Note Shawn's shortest yet email limited to subject line. I'll interpret:

CMS reports are now due Aug 22. I expect us to better define due dates after our meeting with Shawn later this month on formats etc, but we should pick one to do first by that date. I suggest North Plant 2 since it is not affected by Demo and a lot of the North Storm system work will be underway by then.

Our TMCL submittal follows EPA's Approval with Mods letter, so even though we replaced just about every rock in the TMCL field well beyond that earlier letter, our submittal has been accepted and filed as final. I won't be receiving a letter to that effect, just confirmation of this in the attached email. This is fine of course.

Also Doug and Diane - Shawn favorably agreed to ending the OA-12 and 2-66 Sheetpile Interim Measures such that EPI will produce final reports for each noting most recent sampling and otherwise throwing each over the fence to be part of the South Plant 2 CMS Report. That frees up some budget that would have gone to sampling/analysis etc from a July field sampling for both. Diane - please confirm with Doug the part of that budget that is no longer needed for those tasks, and move it to the Bldg Materials Assessment tasks. I'd like to anticipate paying for the contaminant removal part of that work through Grayhawk.

Thanks everyone.

Will Ernst
EO&T | EHS | Remediation
425.891.7724

-----Original Message-----
From: Blocker.Shawn@epamail.epa.gov [mailto:Blocker.Shawn@epamail.epa.gov]
Sent: Tuesday, May 31, 2011 2:30 PM
To: Ernst, William D
Subject: Extension requested granted and TMCLs filed.

Thanks,

Shawn Blocker
Acting Bunker Hill/CDA Team Leader
U.S. Environmental Protection Agency
1200 Sixth Ave, Suite 900, ECL 113
Seattle, WA 98101

Work: (206) 553-4166
Cell: (206) 696-1546

Boeing Plant 2 TMCL Technical Memorandum
May 26, 2011

Boeing Plant 2
Seattle, WA

Target Media Cleanup Levels Technical Memorandum

Prepared For

United States Environmental Protection Agency
Region 10
1200 Sixth Avenue, Suite 900
Seattle WA 98101

Prepared By

The Boeing Company
P.O. Box 3707
Seattle, WA 98124-2207

Based on an Approval with Modifications from EPA Dated September 28th, 2010

May 26, 2011

FINAL

Table of Contents

Foreword ..... **iv**

1.0 Introduction **1-1**

1.1 GOALS AND OBJECTIVES 1-1

1.2 REGULATORY STATUS 1-2

1.2.1 Resource Conservation and Recovery Act (RCRA) 1-2

1.2.2 Comprehensive Environmental Response Compensation and Liability Act (CERCLA) 1-2

1.2.3 Model Toxics Control Act (MTCA) 1-3

2.0 Site Setting, History, and Current Land Use **2-1**

2.1 PHYSICAL SETTING 2-1

2.1.1 Buildings and Physical Structures 2-1

2.1.2 Soils 2-1

2.1.3 Groundwater and Surface Water 2-2

2.1.4 Plant 2 Corrective Measures Study Area 2-2

2.2 SURFACE WATER CONSIDERATIONS 2-2

2.2.1 Highest Beneficial Use of Groundwater 2-2

2.2.2 Beneficial Uses of Lower Duwamish Waterway Surface Water 2-3

2.2.3 Designation of Marine vs. Freshwater Criteria 2-3

2.3 LAND USE CONSIDERATIONS 2-4

2.3.1 Existing Facility Uses 2-4

2.3.2 Future Facility Uses 2-4

2.3.3 Waterway Uses 2-5

2.4 INTERIM MEASURES AND FACILITY UPGRADES 2-5

3.0 TMCLs for Groundwater **3-1**

3.1 GROUNDWATER USE 3-1

3.1.1 Highest Beneficial Use of Groundwater 3-1

3.1.2 Beneficial Uses of Lower Duwamish Waterway Surface Water 3-1

3.2 PROTECTION OF SURFACE WATER 3-2

3.2.1 Protection of Aquatic Species 3-2

3.2.2 Protection of Human Health 3-2

3.3 GROUNDWATER TMCLS FOR PROTECTION OF SURFACE WATER AND POINT OF COMPLIANCE 3-4

4.0 TMCLs for Soil 4-1

4.1 DIRECT CONTACT EXPOSURES 4-1

4.1.1 Current and Future Land Use 4-1

4.1.2 Risk Management Areas 4-1

4.1.3 Residential and Industrial Direct Contact Exposures 4-1

4.2 SOIL FOR THE PROTECTION OF GROUNDWATER....4-2

4.3 OTHER EXPOSURES 4-2

4.4 SOIL TMCLS AT PLANT 2 AND POINT OF COMPLIANCE 4-3

5.0 TMCLs for Ambient Air 5-1

6.0 TMCLs for Sediments.... 6-1

6.1 SEDIMENT CONDITIONS 6-1

6.2 SEDIMENT TMCLS AT PLANT 2 AND POINT OF COMPLIANCE 6-1

7.0 Summary 7-1

SCOPE OF TARGET MEDIA CLEANUP LEVEL TECHNICAL MEMORANDUM 7-2

8.0 References 8-1

List of Tables

Table 1 Groundwater Summary

Table 2 Soil Summary

Table 3 Ambient Air Summary

Table 4 Identification of Sediment Constituents of Concern

List of Attachments

Attachment A Risk-based Spreadsheet Calculations and Support Materials

Attachment B Frequency of Exceedance Tables and Scatter Plots

List of Abbreviations and Acronyms

Abbreviation/Acronym	Definition
ABW	Average body weight
API	Asian/Pacific Islander
BCF	Bioconcentration factor
bgs	Below ground surface
CERCLA	Comprehensive Environmental Response, Compensation, and Liability Act
CMI	Corrective Measures Implementation
CMS	Corrective Measures Study
COC	Constituent of concern
CSL	Cleanup Screening Level
cPAH	Carcinogenic polycyclic aromatic hydrocarbon
DSOA	Duwamish Sediment Other Area
Ecology	Washington State Department of Ecology
FMCL	Final Media Cleanup Level
HHRA	Human Health Risk Assessment
IRMA	Industrial Risk Management Area
LDW	Lower Duwamish Waterway
LDW Site	Lower Duwamish Waterway Superfund Site
MLLW	Mean lower low water
MTCA	Washington State Model Toxics Control Act
PCB	Polychlorinated biphenyl
PCE	Tetrachloroethene
PMCL	Preliminary Target Media Cleanup Level
POC	Point of compliance
RBC	Risk-based concentraton
RCRA	Resource Conservation and Recovery Act
RFI	RCRA Facility Investigation
RSL	Regional Screening Levels
SMS	Sediment Management Standards
SQS	Sediment Quality Standards
Shoreline RMA	Shoreline Risk Management Area
SRMA	Sediment Risk Management Area
SVOC	Semivolatile organic compound
SWB	Southwest Bank
TCE	Trichloroethene
TEE	Terrestrial Ecological Evaluation Exposure Analysis
TMCL	Target Media Cleanup Level
TPH	Total petroleum hydrocarbons
TSD	Treatment, storage, and disposal
USACE	U.S. Army Corp of Engineers
USEPA	U.S. Environmental Protection Agency
VOC	Volatile organic compound

Foreword

This Technical Memorandum is part of the Corrective Measures Study (CMS) for The Boeing Company (Boeing) Plant 2 facility (Plant 2) on the Lower Duwamish Waterway. This document and the CMS process are being performed under the Resource Conservation and Recovery Act (RCRA) Administrative Order on Consent (RCRA Order) issued by the U.S. Environmental Protection Agency (USEPA) to Boeing under the authority of Section 3008(h) of the RCRA of 1976, as amended, (42 United States Code [USC] 6928[h]). This RCRA Order (RCRA Docket Number 1092-01-22-3008[h]) became effective on January 18, 1994 and requires the performance of such interim measures as USEPA may require during the performance of a RCRA Facility Investigation/Corrective Measures Study (RFI/CMS) to assess the nature and extent of hazardous constituent contamination, and to analyze corrective action alternatives to address actual or potential threats to human health and the environment resulting from the release, or potential release, of hazardous constituents at, or from, Plant 2 located at 7755 East Marginal Way South, Seattle/Tukwila, Washington. The CMS Report is being produced as a multiple-volume document, with different volumes being prepared at different times to address different aspects and areas of Plant 2.

The Target Media Cleanup Levels (TMCLs) presented in this document will guide the corrective measures process by setting the “target” levels that corrective measures will be designed to use as cleanup goals and lead to development of Final Media Cleanup Levels (FMCLs). In the RCRA Order, the development of proposed TMCLs was intended to be performed as part of the RFI completed in 1998. However, cleanup levels were not proposed during the RFI process, but were to be established as part of the CMS process. The TMCLs proposed in this document will replace Preliminary Target Media Cleanup Levels (PMCLs) that were established in 1999 to provide goals for Interim Measures that were to be conducted prior to the availability of the TMCLs. In a similar manner, the TMCLs proposed in this document will replace the 2004 Screening Levels that were established at that time to update the 1999 PMCLs by incorporating a number of regulatory and toxicity value changes that followed the 1999 levels.

1.0 Introduction

1.1 GOALS AND OBJECTIVES

This Technical Memorandum documents the process used and assumptions made in developing Target Media Cleanup Levels (TMCLs) for The Boeing Company (Boeing) Plant 2 facility (Plant 2) as part of the Resource Conservation and Recovery Act (RCRA) Corrective Measures Study (CMS). The ability of a technology or alternative to meet TMCLs is one of the criteria used to screen and select corrective measures for Plant 2.

Throughout this document, an overall effort has been made to develop TMCLs that are consistent with the following documents or programs:

- RCRA Administrative Order on Consent (RCRA Order; RCRA Docket Number 1092-01-22-3008[h])
- CMS Work Plan, submitted September 1998 and approved by the U.S. Environmental Protection Agency (USEPA)
- RCRA Guidance and Policy
- Comprehensive Environmental Response, Compensation, and Liability Act (CERCLA) Risk Assessment Guidance for Superfund (USEPA 1989)
- Framework for Selecting and Using Tribal Fish and Shellfish Consumption Rates for Risk-Based Decision Making at CERCLA and RCRA Cleanup Sites in Puget Sound and the Strait of Georgia (USEPA 2007)
- Washington State Model Toxics Control Act (MTCA) Regulations (Washington Administrative Code [WAC] 173-340)

A TMCL is a target concentration for a specific hazardous constituent in a particular medium combined with a point of compliance (POC) where this concentration should be met. This definition meets both the requirements of the RCRA Order and MTCA.

The development of TMCLs is a required component of the RCRA Order for Plant 2. Under the RCRA Order, a preference is made for promulgated criteria. If no promulgated criteria exist or if promulgated criteria address fewer than all potential exposure pathways for a specific constituent or medium, then human health or ecological risk-based criteria are to be developed. For a specific medium, more than one exposure pathway often exists; this results in multiple promulgated criteria and/or risk-based criteria for each constituent. For clarity, this Technical Memorandum will present proposed TMCLs with a clear identification of all constituent, medium, pathway, and POC combinations.

After technologies and specific alternatives have been identified, screened, and evaluated, specific corrective measures will be identified for Plant 2 and presented in the CMS. As part of the description of the corrective measure, Final Media Cleanup Levels (FMCLs) and POCs will be defined for each required action and summarized in the final volumes of the CMS. Much of the detail of their justification, use, and compliance will be presented in the specific volume for the CMS dealing with the specific corrective measure. For this reason, FMCLs may be location

dependent and vary from one area to another at Plant 2, due to differences in land use restrictions, physical settings, and selected corrective measures.

1.2 REGULATORY STATUS

1.2.1 Resource Conservation and Recovery Act (RCRA)

Plant 2 is a treatment, storage, and disposal (TSD) facility subject to RCRA regulation and permitting, which includes corrective action. Section 3008(h) authorizes the issuance of RCRA corrective action Orders. The 3008(h) Order issued to Boeing (RCRA Docket No 1092-01-22-3008[h], effective January 18, 1994) requires the performance of such interim measures as USEPA may require during the performance of a RCRA Facility Investigation/Corrective Measures Study (RFI/CMS) to assess the nature and extent of hazardous constituent contamination, and to analyze corrective action alternatives to address actual or potential threats to human health or the environment from the release or potential release at or from Plant 2.

USEPA has split the administration of Plant 2 into Uplands and Waterway portions. The Waterway portion, referred to as the Duwamish Sediment Other Area (DSOA), begins at the top of the bank (or the rear bulkhead wall under the buildings south of the 16th Avenue bridge), and includes a small area of Uplands referred to as the Southwest Bank (SWB). As such, the Uplands portion generally begins at the top of the bank and extends to the east to include the rest of the facility.

Groundwater discharging from the Uplands through the DSOA is considered part of the Uplands; however, the TMCL for groundwater includes an evaluation to protect the selected sediment remedy in the DSOA (refer to Section 6 for details).

Plant 2 is undergoing the CMS process. A series of data gap investigations was conducted in the Uplands to augment the RFI data set and provide additional data needed to complete the CMS evaluation report of alternatives and the selection of specific remedies in seven sub-areas of Plant 2.

Separately, a DSOA and Southwest Bank Interim Measure Alternatives Evaluation (AMEC and Floyd|Snider 2008) was approved by USEPA in 2011. A Statement of Basis (the RCRA decision document) describing the selected Corrective Measure is expected to be available for Public Comment in spring 2011. The Corrective Measure described in the Statement of Basis is consistent with this TMCL document.

1.2.2 Comprehensive Environmental Response Compensation and Liability Act (CERCLA)

An investigation and analysis of alternatives for the Lower Duwamish Waterway (LDW) Superfund Site is ongoing pursuant to a joint CERCLA/MTCA Administrative Remedial Investigation/Feasibility Study (RI/FS) Order on Consent issued on December 20, 2000, by USEPA and the Washington State Department of Ecology (Ecology) to Boeing, the City of Seattle, Port of Seattle and King County. A CERCLA RI/FS is generally equivalent to a RCRA

RFI/CMS. While the DSOA is geographically within the LDW Site, at Boeing's option, it continues to be addressed as part of the Plant 2 RCRA corrective action, pursuant to the pre-existing 1994 3008(h) Order. The DSOA has been characterized as a RCRA early action in the LDW RI/FS process, and DSOA planning has been coordinated with other LDW activities, particularly at the Jorgensen facility which borders Plant 2 to the south (the 1994 Plant 2 Order was amended to require coordination with the adjacent Jorgensen early action area, as was Jorgensen's CERCLA early action removal Order to require coordination with the adjacent Plant 2 DSOA); and to a much lesser degree with the Slip 4 CERCLA early action area removal, which borders Plant 2 to the north but is recessed from the waterway, and the Terminal 117 early action area removal, which is across the LDW from the southern portion of Plant 2.

1.2.3 Model Toxics Control Act (MTCA)

MTCA is the State of Washington's equivalent of the federal CERCLA statute and is implemented by Ecology. Ecology is participating in the Plant 2 RCRA process as a reviewer. USEPA and Ecology have generally agreed for their mutual convenience in a Memorandum of Understanding that USEPA will generally be the LDW Site lead agency for in-water portions of the Site and Ecology will generally be the lead agency for upland source control portions of the Site, and that the Agencies may alter these lead-support roles at any time for any portions of the Site.

Cleanup level requirements, including consideration of POCs and restoration time frame, specified in the MTCA regulations (WAC Chapter 173-340), have been included in the development of TMCLs at Plant 2.

2.0 Site Setting, History, and Current Land Use

2.1 PHYSICAL SETTING

2.1.1 Buildings and Physical Structures

Plant 2 is located on the east bank of the Duwamish Waterway in Seattle and Tukwila, Washington (refer to Figure 1). Historically, Plant 2 has specialized in manufacturing aluminum alloy, steel alloy, and titanium alloy parts for airplanes. Plant 2 was built on farmland in the late 1930s and became a significant manufacturing facility during World War II. In recent years, the activities at Plant 2 have shifted toward research, testing, and administration; although some manufacturing is still performed there.

As shown on Figure 2, Plant 2 is bounded on the east by East Marginal Way South, a four-lane arterial; on the south by Jorgensen Forge, an active steel and aluminum forge; on the north by Slip 4 and Emerald Services, Inc.; and on the west, by the Lower Duwamish Waterway. The Lower Duwamish Waterway is a federally maintained shipping channel of the Duwamish River; Slip 4 is an off-channel extension of the waterway. Plant 2 is served by both truck and rail, and is accessible from the waterway. Plant 2 is divided into northern and southern sections by a city arterial, 16th Avenue South, which services the 16th Avenue South Bridge over the Duwamish Waterway.

Plant 2 occupies approximately 107 acres of developed, topographically-flat land covered by buildings, paved yards, and parking areas. Most buildings are slab-on-grade with below-grade utilities.

2.1.2 Soils

The soils in the upper 100-feet beneath Plant 2 consist of four major geologic units. The first 3 to 9 feet of soil are comprised of a dark-gray to brown fill that is a loose to very dense, fine-to-medium sand and gray to grayish-brown gravel. Much of the fill appears to be alluvial in nature and probably reflects dredge spoils from modifications to the Duwamish River channel at the beginning of the 20th century; at some locations, debris exists within the fill. The fill is underlain by a discontinuous layer of brownish to greenish-gray to black silt and a soft organic silt layer that is up to approximately 2-feet thick where present.

Beneath the silt is the shallow portion of the upper aquifer that consists of poorly-graded, dark-gray, fine-to-medium sand with varying amounts of silt. This alluvial unit extends from approximately 10-feet below ground surface (bgs) to 40- to 50-feet bgs. Underlying this unit are the older Duwamish River alluvial deposits consisting of thick, coarsening-upward sequences of inter-bedded sand and silty sand. These alluvial deposits extend from approximately 40- to 50-feet bgs to 80-feet bgs.

At approximately 80-feet bgs, well and boring logs from Plant 2 describe a distinctive marine silt layer with shell fragments. The contact between the overlying silty sand and the marine silt is sharp and is readily noted in the field. The marine silt layer is underlain by a dense gray glacial till unit. These two low-permeability deposits form an aquitard that isolates the shallow aquifer (approximately upper 80 feet) from the deeper aquifers beneath the Lower Duwamish Valley.

2.1.3 Groundwater and Surface Water

Groundwater occurs in the alluvial aquifer generally starting at 9- to 12-feet bgs. The approximate groundwater flow direction is southwest towards the Duwamish Waterway. Groundwater from Plant 2 flows directly to the waterway without crossing other properties, except for limited migration across the southern property line onto the northern portion of the Jorgensen Forge facility. Even in that location, the dominant flow direction appears to be approximately parallel to the property line and towards the Duwamish Waterway (FSM 2004).

The Duwamish Waterway in the vicinity of Plant 2 is a tidally-controlled marine embayment with a freshwater lens of outgoing river water on top of the denser (more saline) marine waters. The sediments, while alluvial in nature, have salinities consistent with the marine waters from Elliott Bay. The saltwater layer extends into the Uplands as a saltwater wedge or prism. This wedge is approximately 18- to 23-feet bgs at the top of the bank (0- to minus 5-feet mean lower low water [MLLW]), and deepens as non-saline (and less dense) groundwater discharges from the Uplands over the top of this saltwater wedge. The effect of this saltwater wedge is to steepen the groundwater flow paths that curves upward near the waterway; most of the groundwater in the top 40 feet of the aquifer discharges in a fairly narrow band between minus 5- and plus 5-feet MLLW. Depending on the tidal stage, this discharge will occur into saline, brackish, or freshwater, with the most common situation being groundwater discharge into saline waters.

2.1.4 Plant 2 Corrective Measures Study Area

For the purposes of the CMS, Plant 2 has been divided into the following areas (as shown on Figure 2) for detailed investigation and analysis:

- The North Area
- The 2-10 Area
- The 2-31 Area
- The 2-40s Area
- The 2-60s Area
- The 2-66 Area
- The South Yard Area
- The Waterway Area (also called the DSOA/SWB)

This allows Boeing and the Agencies to focus on specific areas as the cleanup proceeds.

2.2 SURFACE WATER CONSIDERATIONS

2.2.1 Highest Beneficial Use of Groundwater

Risk-based cleanup standards for groundwater are dependent upon the existing and potential future uses of that groundwater. The National Contingency Plan states that “EPA expects to return usable ground waters to their beneficial uses” (40 Code of Federal Regulations [CFR] §300.430[a][1][iii][F]). Generally, the beneficial use of groundwater is either for drinking (i.e., potable) or for discharge to nearby surface waters. Potability is determined empirically using

criteria in WAC 173-340-720(2). While a majority of Plant 2 groundwater may not be potable due to factors in WAC 173-340-720(2), discrete areas of groundwater at Plant 2 may be potable.

In accordance with WAC 173-340-720(1)(i), more stringent cleanup levels may be required to protect sensitive subgroups. The DSOA encompasses American Indian usual and accustomed fishing areas pursuant to treaties of the United States. Northwest tribal populations claim to, and are well known to, consume locally harvested fish and shellfish at a higher rate than the general United States population. For this reason, the "Draft Framework for Selecting and Using Tribal Fish and Shellfish Consumption Rates for Risk-Based Decision Making at CERCLA and RCRA Cleanup Sites in Puget Sound and the Strait of Georgia" (Tribal Risk Framework) provides appropriate guidance for determining exposures used in calculating risk based TMCLs. Fish and shellfish consumption rates derived using this Framework provide more human health-protective cleanup levels than other promulgated or calculated groundwater levels.

Drinking water criteria, including State and Federal Maximum Contaminant Levels, USEPA Regional Screening Levels (RSLs) for tap water, and MTCA Method B/A for groundwater, have been included in this document for completeness, but are only used when insufficient information exists to calculate a criteria to protect fish consumption.

2.2.2 Beneficial Uses of Lower Duwamish Waterway Surface Water

The use designation of the Lower Duwamish Waterway is set forth in WAC 173-201A-602 (see Table 602, which was revised and implemented by Ecology in December 2006, and is pending approval by USEPA under the Clean Water Act). The Washington state-designated uses of the Duwamish River from its mouth to River Mile 11.0 are: salmonid rearing and migration, industrial/agricultural water supply, stock watering, wildlife habitat, secondary contact recreation, boating and sport fishing, commerce, and navigation. Importantly, the Lower Duwamish Waterway is not designated as a potential drinking-water source. Therefore, numerical surface water standards for human health are based on consumption of aquatic organisms (fish and shellfish), and do not include consumption of water.

While WAC 173-201A designates the Duwamish River as fresh surface water, the Duwamish Waterway in the vicinity of Plant 2 is actually a tidally-controlled marine embayment with a thin freshwater lens of outgoing river water on top of the denser (more saline) and more predominant marine waters. The sediments, while alluvial in nature, have salinities consistent with the marine waters from Elliott Bay. Accordingly, for the purposes of calculating Plant 2 TMCLs, the Lower Duwamish Waterway sediments in the vicinity of Plant 2 will be considered "marine," while surface waters will be considered both "freshwater" and "marine."

2.2.3 Designation of Marine vs. Freshwater Criteria

Several regulations and standards require a distinction be made between marine and freshwater. In estuaries, such as the Lower Duwamish Waterway, this distinction can be complex because of the presence of freshwater river discharge as a less-dense layer of water above the tidally influenced marine waters.

For discharge into the water column, both freshwater and marine standards have been considered, although the majority of the water column is saline. The salinity keeps the

groundwater from being potable and influences the biota present in the Lower Duwamish Waterway; however, some freshwater species use the waterway, especially in the upper sections of the water column.

2.3 LAND USE CONSIDERATIONS

2.3.1 Existing Facility Uses

Currently, Plant 2 is used primarily for research and testing, offices, motor pooling and vehicle maintenance, and warehousing of parts and equipment. Small-scale manufacturing operations are also ongoing in conjunction with research and testing functions. The North Area of Plant 2 has been redeveloped in recent years and now contains the Integrated Aircraft Systems Laboratory, associated parking, stormwater treatment bioswales, and a sliver of land that provides a public walking trail along Slip 4 and the Lower Duwamish Waterway. A portion of the South Yard Area has also been redeveloped in recent years and now is home to a wind-tunnel and other research facilities. In the 2-60s and 2-66 Areas, former Buildings 2-62, 2-63, 2-64, 2-65, and 2-66 have been removed, and the 2-40 series buildings are currently undergoing demolition to complete the redevelopment of these and other outdated and underused areas of Plant 2.

Except for the shoreline in the North Area along Slip 4, Plant 2 is a fenced, paved, and access-controlled property. The small portion of the North Area that is accessible to the public is separated from the rest of Plant 2 by a security fence.

2.3.2 Future Facility Uses

Boeing continues to plan for and conduct redevelopment of outdated and underused structures, particularly in areas south of 16th Avenue South. Future Uplands land use by Boeing at Plant 2 is anticipated to be industrial, which is consistent with local area land use controls. Deed restrictions and restrictive covenants will be implemented as needed to support corrective measures that rely on industrial exposure scenarios.

The Comprehensive Plans for the Cities of Seattle and Tukwila recognize the Duwamish Manufacturing/Industrial Center as key to continued industrial and manufacturing jobs in the region. Plant 2 is well within this area, and is zoned and targeted for continued industrial use (City of Seattle 2005; City of Tukwila 2005).

The City of Seattle and King County have slated the 16th Avenue South Bridge (the approach to which bisects Plant 2) for replacement because of its age and condition. Removal of the old bridge and construction of a new bridge adjacent to the north are scheduled to begin in spring 2011 and will be completed in 2013. Bridge demolition and reconstruction will shift the present bridge approach to the north and require an exchange of small areas of property between Boeing and King County. The future configuration of 16th Avenue South through Plant 2 will be documented in the CMS alternatives evaluation report.

Based on current uses and planned or anticipated projects, future activities at Plant 2 include the following:

- Operation of research facilities in the North and South Yard Areas

- Redevelopment of industrial facilities in the central portions of the Site
- Reconstruction of the 16th Avenue South Bridge and approach (by King County)
- Ongoing public access along Slip 4 in the North Area.
- Construction of shoreline habitat south of the 16th Avenue South Bridge and in the North Area
- Construction of updated stormwater management systems throughout Plant 2

At the end of these changes, approximately 95 percent of the current facility would remain a controlled-access, fenced, and paved industrial property. The other 5 percent would include unpaved, vegetated, and limited- or no-access habitat and stormwater control areas.

2.3.3 Waterway Uses

The Lower Duwamish Waterway is a straightened and dredged channel of the Duwamish River. Channel depth is maintained by the U.S. Army Corps of Engineers and the Port of Seattle. The river from bank-to-bank is generally owned by the Port of Seattle from approximately Harbor Island to the upper turning basin. The area is used for fish and shellfish habitat, salmon migration, boating and sport fishing, tribal fishing, shipping, navigation, and commerce. These uses are expected to continue in the future.

2.4 INTERIM MEASURES AND FACILITY UPGRADES

Beginning in 1986, Boeing has conducted, and continues to conduct, numerous interim measures and other actions to control or eliminate sources of contaminants to the environment. These actions include, for example, the installation of three sheetpile enclosures to contain solvent-contaminated soil and groundwater, updated management of electrical equipment and vaults, cleaning of legacy solids in stormwater drainage pipes, removal or control of polychlorinated biphenyl (PCB) containing caulks, removal of contaminated soils, removal of floating diesel from groundwater in one area, and actions to remedy contamination in groundwater in multiple locations. Some were performed as RCRA interim measures, some as pre-order activities, and some as part of facility upgrades in conjunction with the RCRA Order. Work is continuing today on such actions, including action as part of redevelopment activities.

The Uplands CMS volumes will describe the interim measures and other actions that have been conducted in each subarea to date, will clarify what contamination still remains at Plant 2, and will evaluate and propose required measures to eliminate remaining sources and pathways to be conducted during Corrective Measures Implementation (CMI).

3.0 TMCLs for Groundwater

3.1 GROUNDWATER USE

3.1.1 Highest Beneficial Use of Groundwater

Cleanup levels for groundwater are dependent upon the existing and potential future uses of that groundwater. The National Contingency Plan states that "EPA expects to return usable ground waters to their beneficial uses" (40 CFR §300.430[a][1][iii][F]). Generally, the beneficial use of groundwater is either for drinking (i.e., when potable) or for discharge to nearby surface waters. Potability is determined empirically using criteria in WAC 173-340-720(2). While a majority of Plant 2 groundwater may not be potable due to factors in WAC 173-340-720(2), discrete areas of groundwater at Plant 2 may be potable.

In any case, in accordance with WAC 173-340-720(1)(i), more stringent cleanup levels may be required to protect sensitive subgroups. The DSOA encompasses American Indian usual and accustomed fishing areas pursuant to treaties of the United States. Northwest tribal populations claim to, and are well known to, consume locally harvested fish and shellfish at a higher rate than the general United States population. For this reason, the "Draft Framework for Selecting and Using Tribal Fish and Shellfish Consumption Rates for Risk-Based Decision Making at CERCLA and RCRA Cleanup Sites in Puget Sound and the Strait of Georgia" (Tribal Risk Framework) provides appropriate guidance for determining exposures used in calculating risk based TMCLs. Fish and shellfish consumption rates derived using this Framework provide more human health-protective cleanup levels than other promulgated or calculated groundwater levels.

Drinking water criteria, including State and Federal Maximum Contaminant Levels, USEPA Regional Screening Levels (RSLs) for tap water, and MTCA Method B/A for groundwater, have been included in this document for completeness, but are only used when insufficient information exists to calculate a criteria to protect fish consumers.

3.1.2 Beneficial Uses of Lower Duwamish Waterway Surface Water

The following beneficial uses of the Duwamish River from its mouth to river mile 11.0 (inclusive of the Lower Duwamish Waterway) are set forth in WAC 173-201A-602 (Table 602, revised and implemented by Ecology, December 2006, and pending approval by USEPA under the Clean Water Act): salmonid rearing and migration, industrial/agricultural water supply, stock watering, wildlife habitat, secondary contact recreation, boating and sport fishing, commerce, and navigation. Importantly, the Lower Duwamish Waterway is not designated as a potential drinking-water source. Therefore, numerical surface water standards for human health are based on consumption of aquatic organisms (e.g., fish and shellfish), and do not include drinking water.

While WAC 173-201A designates the Duwamish River as fresh surface water, the Duwamish Waterway in the vicinity of Plant 2 is actually a tidally-controlled marine embayment with a thin freshwater lens of out-going river water on top of the denser (more saline) and more predominant marine waters. The sediments, while alluvial in nature, have salinities consistent with the marine waters from Elliott Bay. However, due to the presence of the freshwater lens of

water over this more dense saline water and for the purposes of calculating Plant 2 TMCLs, the Lower Duwamish Waterway surface water adjacent to Plant 2 will be considered both marine and freshwater.

3.1.3 Designation of Marine vs. Freshwater Criteria

For discharge into the water column, both freshwater and marine standards have been considered, although the majority of the water column is saline, except during extreme storm events. The salinity keeps the water from being potable and influences the biota present; however, some freshwater species use the waterway, especially in the upper sections of the water column.

Several freshwater standards for metals are hardness dependent. Those standards have been calculated based on hardness data collected from the middle of the freshwater layer in the reach of the waterway that abuts Plant 2 (AMEC 2011); because hardness varies seasonally, the hardness that resulted in the lower freshwater standard was used to be most conservative.

3.2 PROTECTION OF SURFACE WATER

Surface water is not a contaminated medium at Plant 2. However, in order to establish groundwater TMCLs that are protective of surface water, it is necessary to define concentrations in surface water that are protective of human health and aquatic species, and then establish groundwater TMCLs that are protective of these calculated surface water concentrations.

3.2.1 Protection of Aquatic Species

Surface water concentrations that are protective of aquatic species can be found in three promulgated regulations:

- Ambient Water Quality Criteria established under Sections 303-304 of the Clean Water Act (33 U.S.C. 1313-14)
- National Toxics Rule at 40 CFR 131.36
- Washington State Surface Water Quality Standards at RCW 90-48 and WAC 173-201A, both chronic and acute, and marine and freshwater standards

3.2.2 Protection of Human Health

Surface water concentrations that are protective of human consumption of fish and shellfish can be found in three promulgated regulations:

- Ambient Water Quality Criteria established under Sections 303-304 of the Clean Water Act (33 U.S.C. 1313-14)
- National Toxics Rule at 40 CFR 131.36
- Model Toxics Control Act, WAC 173-340-730, surface water cleanup levels

These regulations contain provisions for developing modifications for sensitive populations. As discussed above, USEPA has determined that sensitive populations exist along the Lower Duwamish Waterway that require modification as discussed below.

Consideration of Tribal and Asian and Pacific Islanders' Seafood Consumption Rates

USEPA Region 10 published the document "Framework for Selecting and Using Tribal Fish and Shellfish Consumption Rates for Risk-Based Decision Making at CERCLA and RCRA Cleanup Sites in Puget Sound and the Strait of Georgia" (USEPA, 2007). It is based on fish and shellfish consumption studies of tribes, primarily the Tulalip Tribes and the Suquamish Tribe. For Plant 2, USEPA instructed Boeing to use the Tulalip Tribes' consumption rate, minus salmon and minus fish and shellfish harvested outside Puget Sound. USEPA made the following assumptions in providing this direction to Boeing:

1. The Tulalip Tribes' consumption rate is likely more appropriate for the Lower Duwamish Waterway area than is the Suquamish Tribe's rate, because the Lower Duwamish Waterway is unlikely—even under "clean" conditions—to have sufficient intertidal shellfish habitat to sustain the high rate of shellfish consumption that the Suquamish Tribe enjoys.
2. All fish and shellfish harvested from outside Puget Sound are assumed to not be contaminated by releases from Plant 2.
3. Salmon are assumed to be exposed to the chemicals present in their tissues when caught as adults in the Lower Duwamish Waterway from remote locations in Puget Sound or the open ocean.

There are many uncertainties associated with these assumptions, which are addressed in the Framework. The Framework specifically addresses the uncertainties associated with the third assumption above with this language:

> PCBs and other bio-accumulative and persistent chemicals found in contaminated sediments can be moved from their site of release via erosion, dredging, tidal currents, flood events, and vapor transport. Offsite transport is also possible when aquatic organisms become contaminated near a cleanup site and then migrate to distant locations, where they contribute to food chain effects that eventually affect fish, including adult salmon. However, adult salmon body burdens of bio-accumulative and persistent contaminants typically come from many sources and cannot currently be apportioned with confidence to specific locations. An assumption that contaminants present in harvested salmon are not associated with the site, even when the same chemicals have been released from the site, is likely to underestimate the site's contribution to risks from consuming such fish. The degree of underestimation is not known.
>
> If the full body burden of bioaccumulative and persistent contaminants released at a site and found in local salmon is attributed to a single source (*i.e.*, the site under evaluation), site contributions to risk are likely to be overestimated, since some portion of the body burden likely has been acquired elsewhere.
>
> Some site-related contaminants may bioconcentrate in adult salmon due to epithelial tissue or gill contact, depending in part upon the salmon residence time in the vicinity of the site-related contamination. Making an assumption that adult salmon do not reside in the vicinity of the site long enough for bioconcentration to occur could result in an erroneous exclusion of contaminants in salmon from the site-related risk assessment. An assumption that bioconcentration does occur could lead to an overestimation of risks if uptake does not occur.

The total fish and shellfish consumption rate for the Tulalip Tribes, based on a 95th percentile consumer-only consumption rate for benthic fish, pelagic fish, shellfish and salmon is 243 g/day. After adjusting for Puget Sound-harvested fish and shellfish only and assuming that the site-

related PCB contaminant body burden for salmon is zero, the effective consumption rate to be used for Plant 2 is 97.1 g/day. Pursuant to recommendations in the Framework, the tribal exposure duration is assumed to be 70 years (instead of the standard 30 years in a risk assessment) to account for a lifetime of eating fish and shellfish from a specific harvesting area. The average body weight of the adult participants in the study, 81.8 kg, is also used. The consumption rate for children was estimated to be 38.8 g/day, which is 40 percent of the adult rate, an option provided in the Framework.

Also accounted for are the seafood consumption rates of Asian and Pacific Islanders (A&PI) who harvest from the Lower Duwamish Waterway and Elliott Bay and may be exposed to chemical releases from Plant 2 in this manner. USEPA funded and participated in a study (Sechena et al., 1999) to estimate the amount and types of seafood consumed by the A&PI population in King County. The 95th percentile total seafood A&PI consumption rate is 305.7 g/day. The seafood harvested and consumed by A&PIs only from King County waters, was estimated and assumed to be the amount of seafood potentially affected by Plant 2 releases and hence associated with Plant 2 A&PI seafood consumption risks. This amount, for adults, is 57.1 g/day, extrapolated to a child rate of 23 g/day based on 40 percent of the adult rate. The average adult study participant body rate of 63 kg was used. As USEPA had no information regarding exposure duration based on consistency in harvesting from certain areas over a lifetime, the standard exposure duration of 30 years was used for this population. These exposure assumptions, including the adjusted seafood consumption rate, have been adopted by Ecology for use as appropriate for use with MTCA surface water cleanup equations for sites in the Lower Duwamish Waterway/Elliott Bay area.

3.3 GROUNDWATER TMCLS FOR PROTECTION OF SURFACE WATER AND POINT OF COMPLIANCE

Attachment A contains details on development of the groundwater TMCLs. Tables include the development of the constituent list (the list includes both a complete list of constituents detected at Plant 2 and other chemicals of interest to USEPA); a comprehensive list of toxicological factors and their source; a comprehensive list of partitioning factors and their source; equations for the calculation of risk-based levels with parameters for different exposure scenarios, including scenarios for Asian/Pacific Islander and Tribal populations; and tabulated comparison of risk-based levels and available standards and criteria used for the development of the TMCLs.

Table 1 contains USEPA's TMCLs for groundwater for the protection of surface water, including human and aquatic species. Table 1 also contains potential TMCLs based on consumption of drinking water; however, they are only appropriate for use at Plant 2 when it was not possible to develop a TMCL for the protection of surface water. For example, no surface water standard exists for petroleum hydrocarbons; therefore, the MTCA Method A values for total petroleum hydrocarbon (TPH) fractions in groundwater, which are based on a drinking water exposure, have been used as surrogate TMCLs for the protection of surface water.

Attachment B (Table B.2a through Table B.2e) contains the identification of groundwater Constituents of Concern for Boeing Plant 2 and the associated TMCLs that will be carried into the CMS consistent with Section 1.1.

The proposed POC at Plant 2 for groundwater for the protection of surface water is the Shoreline Monitoring Well Network. This existing network, which has been sampled routinely since 2001, will be modified as part of the CMS alternatives evaluation process at Plant 2. The Shoreline Monitoring Program is an ongoing program, and it is possible that future monitoring may result in the inclusion of additional of COCs should their concentrations exceed their TMCLs.

Several metals TMCLs are listed as "background." These metals occur naturally, and have associated background levels available to use as TMCLs that were previously approved by USEPA for use along the Lower Duwamish Waterway (USEPA May 2006).

4.0 TMCLs for Soil

4.1 DIRECT CONTACT EXPOSURES

4.1.1 Current and Future Land Use

The current land use at Plant 2 includes research and testing, offices, motor pooling and vehicle maintenance, and warehousing of parts and equipment. Some small-scale manufacturing operations are also ongoing in conjunction with research and testing functions. Except for the shoreline in the North Area, Plant 2 is a fenced, paved, and access-controlled property. Additional details on adjacent facilities and zoning is presented in Section 2.0.

Future Uplands land use at Plant 2 is expected to remain industrial, which is consistent with local area land use controls and deed restrictions. Boeing expects to establish restrictive covenants to ensure that land use remains industrial at the Site. Some small areas adjacent to the Duwamish Waterway will convert to habitat and stormwater management uses.

4.1.2 Risk Management Areas

To facilitate the discussion of TMCLs for soil and sediment, the Site has been divided into three risk management areas, as follows:

- The Industrial Risk Management Area (IRMA) is that section of the Plant 2 facility that is fenced, paved or covered by buildings, and access-controlled.
- The Sediment Risk Management Area (SRMA) is that section of the Lower Duwamish Waterway that is contained within the footprint of the DSOA, including the banks to the top of the bank, and the complete SWB Interim Measures footprint. This area is defined in detail in the *Duwamish Sediment Other Area and Southwest Bank Interim Measure Alternative Evaluation* (AMEC and Floyd|Snider 2008).
- The Shoreline Risk Management Area (Shoreline RMA) is generally located between the IRMA and SRMA. It contains areas that are neither industrial nor aquatic lands, including Uplands habitat areas, stormwater swales and vaults, major utility lines, and the Shoreline Monitoring Well Network.

4.1.3 Residential and Industrial Direct Contact Exposures

Direct Contact, Including Ingestion, Dermal, and Inhalation of Dust

USEPA has developed residential TMCLs for Plant 2. USEPA has stated that it intends to use the residential TMCLs as an “unrestricted land use baseline;” however, USEPA has also stated that Boeing may propose industrial FMCLs in this Technical Memorandum with the understanding that FMCLs will be determined in the subsequent CMS process. The following tables and discussion include both residential TMCLs and industrial TMCLs for soil.

TMCLs for soil were developed from the following two sources:

- USEPA Regional Screening Levels (RSLs) for Chemical Contaminants at Superfund Sites were used for both residential and industrial exposures. Industrial exposures have been modified to represent a 1 in 100,000 excess individual lifetime cancer risk to workers to comport with other risk management decisions in Region 10's RCRA corrective action program. Toxicological factors are those used by the USEPA RSL Program.
- MTCA standard Method C industrial and Method B residential exposures using generic default assumptions to calculate cleanup levels as per WAC 173-340-745 and WAC 173-340-740.

Trenching Exposures

In 2008, USEPA Region 10 requested that Boeing develop a trenching scenario as part of the development of soil and groundwater TMCLs (Floyd|Snider 2008). For soil, the trenching scenario was less restrictive than either the industrial or residential scenarios listed above; therefore, it did not control the selection of soil TMCLs and is not included in this TMCL document. All trenching at Boeing requires and will require a Health and Safety Plan that addresses all possible contaminants present in soils (and groundwater if applicable).

4.2 SOIL FOR THE PROTECTION OF GROUNDWATER

A pathway exists from the areas of contaminated vadose zone soils in the Uplands of Plant 2 into the groundwater. Once contaminated, this groundwater discharges through the sediments and into the surface water of the Lower Duwamish Waterway. The receptors in the Lower Duwamish Waterway include not only the sediments and benthic organisms residing in the sediments, but also the aquatic species and ultimately humans via ingestion of fish and shellfish.

Groundwater TMCLs were calculated in Section 3. In this section, MTCA's three-phase partitioning model (WAC 173-340-747) has been used to estimate soil concentrations that would be protective of groundwater directly beneath the soil contamination. No attempt has been made to attenuate contamination with groundwater migration or to account for the location of the groundwater POC (the shoreline) relative to the location of the soil contamination. Attenuation may be used in the site-specific discussions within the CMS to support the use of FMCLs.

For organic chemicals, the water-organic carbon (Koc) partitioning coefficients were found in the literature and guidance and are presented in Appendix A. Soil to water partitioning coefficients (Kd) were then calculated from the Koc using the soil fraction of organic carbon (Foc). At Boeing Plant 2 foc for the vadose zone soils was derived during the RFI and Data Gap Investigations as 0.02. This value was the average of 22 measurements taken across the site in areas with little or no organic contamination and is consistent with the nature of the vadose soils at the site.

4.3 OTHER EXPOSURES

Two additional exposure pathways have been considered at Plant 2: vapor intrusion into buildings and direct contact pathways for terrestrial ecological receptors.

Although vapor intrusion models have been developed in an attempt to determine soil and groundwater concentrations that are protective of indoor air, they have not been successful in partitioning concentrations between the media in situations where both soil and groundwater are contaminated. For this reason, it was determined that ambient air would be treated as a potentially contaminated medium at Plant 2 and that ambient air TMCLs would be developed for all volatile organic compounds (VOCs) detected at Plant 2 in any medium (plus other VOCs of interest to USEPA). Ambient air TMCLs are developed in Section 5. It is understood that should corrective action be needed at Plant 2 to reduce ambient air concentrations, including those in buildings, that the actions may deal with source concentrations in soil and/or groundwater. However, compliance will be demonstrated by measurement of ambient air as discussed in Section 5.

Direct contact between soil and terrestrial ecological receptors is currently blocked by paving, buildings, and the industrial nature of the facility. As requested by USEPA, specific "scoring" of the Site for ecological evaluation was made under MTCA using Table 749-1: Simplified Terrestrial Ecological Evaluation Exposure Analysis (TEE) under WAC 173-34007492(2)(a)(ii) was applied. Based on this evaluation, no site-specific is needed at this time. Because this pathway is currently blocked by pavement and buildings, and by Boeing management practices, ongoing industrial land use will depend on maintaining that control through deed restrictions and/or restrictive covenants and ongoing physical controls. Should land use change in the future, a more detailed ecological evaluation would be conducted at that time.

4.4 SOIL TMCLS AT PLANT 2 AND POINT OF COMPLIANCE

Attachment A contains details on development of the soil TMCLs. Tables include the development of the constituent list (the list includes both a complete list of constituents detected at Plant 2 and other chemicals of interest to USEPA); a comprehensive list of toxicological factors and their source; a comprehensive list of partitioning factors and their source; equations for the calculation of risk-based levels with parameters for different exposure scenarios; and tabulated comparison of risk-based levels and available standards and criteria used for the development of the TMCLs.

Table 2 contains the USEPA TMCLs for soil for residential exposure, industrial exposure, and protection of groundwater (based on the groundwater TMCL in Section 3).

Attachment B (Tables B.1a through B.1e) contains the identification of soil Constituents of Concern for Boeing Plant 2 and the list of soil TMCLs that will be carried into the CMS consistent with Section 1.1. The POC for soil is throughout the vadose zone (upper 11-feet bgs) over the entire Uplands site. In the Shoreline RMA, surface soil along the bank will also need to comply with sediment TMCLs (as described in Section 6.0) to protect the DSOA corrective measure from contamination caused by erosion and sloughing. If the Shoreline RMA is expanded in the future to include presently paved areas, soils in the then expanded Shoreline RMA will need to be made protective of terrestrial receptors at that time.

5.0 TMCLs for Ambient Air

As with the other media, a residential baseline TMCL has been established for ambient air. This exposure considers both the MTCA Method B Ambient Air cleanup levels (WAC 173-340-350) and USEPA RSL development. An industrial TMCL has also been defined based on the USEPA RSL assumptions for exposure and the Region 10 risk management decision to use a 1 in 100,000 cancer risk for workers.

Attachment A contains details on development of the ambient air TMCLs. Tables include the development of the constituent list (the list includes both a complete list of constituents detected at Plant 2 and other chemicals of interest to USEPA); a comprehensive list of toxicological factors and their source; and equations for the calculation of risk-based levels with parameters for different exposure scenarios.

Table 3 contains the USEPA ambient air TMCLs for both residential and industrial/worker exposures. This table does not consider background air concentrations, although many volatile organics are present in urban air in Seattle. Correction for background air concentrations may be considered at the time of sampling and when assessing indoor air concentrations, and are not needed for the present discussion.

Attachment B (Table B.4) contains the identification of ambient air COCs for Boeing Plant 2 and the list of ambient air TMCLs that will be carried into the Corrective Measures Study consistent with Section 1.1.

6.0 TMCLs for Sediments

6.1 SEDIMENT CONDITIONS

TMCLs for sediments in the Lower Duwamish Waterway are intended to protect benthic and pelagic aquatic species using the Lower Duwamish Waterway and humans who may consume seafood from the Lower Duwamish Waterway. The Sediment Quality Standards (SQS) of the Washington Sediment Management Standards (SMS) are numerical standards developed for the protection of benthic invertebrate organisms. These are the only organisms for which SMS numerical standards have been promulgated to date. WAC 173-204-570)(4) requires site-specific cleanup standards to be as close as practicable to the SQS, also called the "cleanup objective," but no higher than the Cleanup Screening Level (CSL), also called the "Minimum Cleanup Level." WAC 173-204-570(5) requires that all cleanup standards must ensure protection of human health and the environment. Human health SMS numerical criteria are reserved for site-specific determination. Due to bioaccumulation in the food chain some aquatic species above benthic invertebrates in the food chain could require more stringent protection than the SQS. Currently, these do not need to be specified or developed further because the calculated risk to human seafood consumers is consistently greater (refer to Windward 2007).

Risk-based concentrations (RBCs) of PCBs, as a driver COC for the protection of human seafood consumers, based on calculations using the Tribal Risk Framework consumption rate of 97.1 grams/day (i.e., approximately 3.5 ounces/day) are more stringent than background levels (refer to Windward 2007). MTCA requires that where RBCs are more stringent than background, cleanup standards for final remedies must achieve natural background levels, while interim actions may be designed to achieve anthropogenic background levels.

As such, the TMCLs for the sediments will be based on these standards and are contained in Table 4.

6.2 SEDIMENT TMCLS AT PLANT 2 AND POINT OF COMPLIANCE

The sediment TMCLs for Plant 2 apply to surface sediments in the intertidal and subtidal areas. These areas will consist of clean backfill placed during the proposed Corrective Measure. In areas where erosion or direct contact is possible, the sediment TMCLs will also be applied to the bank sediment. Monitoring of the new, clean sediment surface will be performed to assess the rate of recontamination, if any, that may migrate from outside the remedy area. Monitoring of groundwater also will be performed to assess the rate and potential for contamination present in the groundwater to affect the clean sediment backfill material.

Attachment B (Table B.3) contains the identification of sediment COCs for Boeing Plant 2 and the list of sediment TMCLs that are used in the 2011 DSOA/SW Bank Corrective Measures Report (AMEC and Floyd|Snider 2011) and Statement of Basis (USEPA 2011).

7.0 Summary

SCOPE OF TARGET MEDIA CLEANUP LEVEL TECHNICAL MEMORANDUM

This Technical Memorandum presents TMCLs for groundwater, soil, ambient air, and sediment, at Plant 2. TCMLs were developed for all constituents detected at Plant 2 (plus additional constituents of interest to USEPA) for which promulgated standards or established toxicity data are available.

In Attachment B, concentrations at Plant 2 were compared to TMCLs to identify the Constituents of Concern for the CMS.

The CMS will focus on identification of appropriate corrective measures in each area for the constituents needing TMCLs in that area. Because additional investigation work maybe performed at Plant 2 as part of the CMS, the list of constituents needing TMCLs for an area may be updated in the future as additional data are collected during the CMS process.

Once approved TMCLs are available for use, the CMS can proceed with evaluation of potential corrective measures. The TMCLs will also be used to evaluate the effectiveness of specific corrective measures and previously conducted interim measures.

The CMS discussion will address the issue of data representativeness when compared to TMCLs. For example, some of the older groundwater data at Plant 2 are 20 years old and no longer represent current conditions; more recent data have been collected for the entire Site, and these more current data will be the focus of the CMS evaluation process. Each section will discuss how historical and current data are used in identifying contamination and evaluating the appropriate corrective measure based on the pathways present within the given geographic area

FMCLs will be proposed as part of the CMS report. FMCLs may be developed for a constituent throughout an area or may be developed location-by-location based on some other factor. For example, Boeing may choose to use an industrial soil FCML of 10 mg/kg for PCBs in the IRMA beneath pavements and buildings rather than the soil to groundwater TMCL of 0.002 mg/kg. If so, the CMS will discuss the site-specific conditions and engineering controls that result in protection of human health and the environment. Site-specific conditions may include, but are not limited to, consideration of attenuation, degradation, and other related processes. Engineering and institutional controls may include, but are not limited to, pavement to reduce infiltration and block access, monitoring, and restricted access to industrial areas, and restrictive covenants.

8.0 References

AMEC Geomatrix, Inc. (AMEC). 2011. *Water Quality Technical Memorandum, Duwamish Waterway Adjacent to Boeing Plant 2.* Submitted to The Boeing Company. February.

AMEC Geomatrix, Inc. and Floyd|Snider (AMEC and Floyd|Snider). 2008. *Duwamish Sediment Other Area and Southwest Bank Interim Measure Alternatives Evaluation.* Prepared for The Boeing Company. Seattle, Washington. 6 November.

———. 2011. *Duwamish Sediment Other Area Southwest Bank Corrective Measures Alternatives Study, Boeing Plant 2, Seattle/Tukwila, Washington.* Prepared for The Boeing Company. Seattle, Washington.

City of Seattle. 2005. *City of Seattle Comprehensive Plan: Future Land Use Map*. Available online at http://www.seattle.gov/dpd/cms/groups/pan/@pan/@plan/@proj/documents/web_informational/dpdp_019479.pdf.

City of Tukwila. 2005. *City of Tukwila Comprehensive Plan Map. Land Use Designations*. Adopted by City Council, 4 December 1995. Available online at http://www.ci.tukwila.wa.us/dcd/compplan/COMPplanmap.pdf.

Floyd|Snider. 2008. Target Media Cleanup Level (TMCL) Technical Memorandum. Prepared for The Boeing Company. Seattle, Washington. December.

Sechena, R., Nakano, C., Liao, S. Polissar, N., Lorenzana, R., Truong, S. and Fenske, R. 1999, Asian and Pacific Islander Seafood Consumption Study. EPA 910/R-99-003. May.

U.S. Environmental Protection Agency (USEPA). 1989. *Risk Assessment Guidance for Superfund, Volume I, Human Health Evaluation Manual (Part A) Interim Final.* USEPA Publication EPA/540/1-89/002. December.

_____. 2005. *Human Health Risk Protocol for Hazardous Waste Combustion Facilities.* USEPA Publication EPA530-R-05-006. September.

_____. 2006. Letter to Mr. William Ernst, The Boeing Company, from Mr. Shawn Blocker, USEPA Region 10, re: Technical Memorandum: Development and Use of Backgound Values, Boeing Plant 2, Seattle/Tukwila, Washington, Resource Conservation and Recovery Act (RCRA) dock No. 1092-01-22-3008(h), EPA ED No. WAD 09925 6819. 15 May.

_____. 2007. *Framework for Selecting and Using Tribal Fish and Shellfish Consumption Rates for Risk-Based Decision Making at CERCLA and RCRA Cleanup Sites in Puget Sound and the Strait of Georgia.* August.

———. 2011. *Statement of Basis for Proposed Corrective Action, Duwamish Sediment Other Area and Southwest Bank, Boeing Plant 2.* EPA Identification Number WAD 00925 6819. Administrative Order on Consent 1092-01-022-3008(h). March.

Windward. 2007. *Lower Duwamish Waterway Remedial Investigation Report. Appendix B: Baseline Human Health Risk Assessment, Final.* Prepared for the Lower Duwamish Waterway Group, USEPA, and Washington State Department of Ecology. 12 November.

Boeing Plant 2
Seattle, WA

Target Media Cleanup Levels Technical Memorandum

Tables

FINAL

Table 1
Groundwater Summary

CAS Number	Chemical[1]	Boeing Plant 2 Groundwater Background[2]	Protection of Drinking Water[3] – Drinking Water Standard/Criteria[4]					Protection of Aquatic Species – Freshwater Standards			Protection of Aquatic Species – Marine Standards			Protection of Human Health for Consumption of Fish and Shellfish in Marine Waters				EPA Proposed TMCL for Surface Water and Groundwater Discharging to Surface Water in the Lower Duwamish Waterway	
			Federal Primary Drinking Water Standards[5]	EPA RSL Tap Water Criteria[6]	State Primary Drinking Water Standards[7]	MTCA A Groundwater Cleanup Level[8]	MTCA B Groundwater Cleanup Level[9]	Federal National Toxics Rule[10]	Federal Ambient Water Quality Criteria[11,12]	Washington Surface Water Quality Standards[12,13]	Federal National Toxics Rule[10]	Federal Ambient Water Quality Criteria[11]	Washington Surface Water Quality Standards[12, 13]	Federal National Toxics Rule[10]	Federal Ambient Water Quality Criteria[11]	Lowest of Tribal and Asian/Pacific Islander Exposure Scenarios[14]	MTCA Method B Surface Water[15]		
			EPA MCLs		Washington MCLs			Chronic	Chronic	Chronic	Chronic	Chronic	Chronic	Organism Only			Fish/Shellfish		
			(µg/L)	(µg/L)	(µg/L)	(µg/L)	(µg/L)	(µg/L)	(µg/L)	(µg/L)	(µg/L)	(µg/L)	(µg/L)	(µg/L)			(µg/L)	(µg/L)	Exposure Pathway Basis of TMCL
Metals																			
7429-90-5	Aluminum	--	--	3.7E+04	--	--	1.6E+04	--	8.7E+01	--	--	--	--	--	--	--	--	8.7E+01	Freshwater Chronic AWQC to protect aquatic species.
7440-36-0	Antimony (metallic)	--	6.0E+00	1.5E+01	6.0E+00	--	6.4E+00	--	--	--	--	--	--	4.3E+03	6.4E+02	1.5E+02	1.0E+03	1.5E+02	EPA R10 Tribal Consumption of Seafood.
7440-38-2	Arsenic (inorganic)	8.0E+00	1.0E+01	4.5E-02	1.0E+01	--	5.8E-02	1.9E+02	1.5E+02	1.9E+02	3.6E+01	3.6E+01	3.6E+01	1.4E+01	1.4E-01	5.4E-03	3.8E-02	8.0E+00	Lower Duwamish Waterway Groundwater Background.
7440-39-3	Barium	--	2.0E+03	7.3E+03	2.0E+03	--	3.2E+03	--	--	--	--	--	--	--	--	1.2E+02	8.2E+02	1.2E+02	EPA R10 Tribal Consumption of Seafood.
7440-41-7	Beryllium	--	4.0E+00	7.3E+01	4.0E+00	--	3.2E+01	--	--	--	--	--	--	--	--	1.2E+01	8.4E+01	1.2E+01	EPA R10 Tribal Consumption of Seafood.
7440-43-9	Cadmium	--	5.0E+00	1.8E+01	5.0E+00	--	8.0E+00	1.9E+00	2.5E-01	1.9E+00	9.3E+00	8.8E+00	9.3E+00	--	--	4.3E-01	2.9E+00	2.5E-01	Freshwater Chronic AWQC to protect aquatic species.
18540-29-9	Chromium (VI)	--	--	4.3E-02	--	--	4.8E+01	1.0E+01	1.1E+01	1.0E+01	5.0E+01	5.0E+01	5.0E+01	--	--	5.8E-01	4.1E+00	5.8E-01	EPA R10 Tribal Consumption of Seafood.
7440-48-4	Cobalt	--	--	1.1E+01	--	--	4.8E+00	--	--	--	--	--	--	--	--	--	--	4.8E+00	Surrogate Value: MTCA B groundwater to protect drinking water.
7440-50-8	Copper	8.0E+00	1.3E+03	1.5E+03	--	--	6.4E+02	2.3E+01	2.9E+00	2.3E+01	2.4E+00	3.1E+00	3.1E+00	--	--	4.3E+02	2.9E+03	8.0E+00	Lower Duwamish Waterway Groundwater Background.
7439-89-6	Iron	--	--	2.6E+04	3.0E-01	--	1.1E+04	--	1.0E+03	--	--	--	--	--	--	--	--	1.0E+03	Freshwater Chronic AWQC to protect aquatic species.
7439-92-1	Lead	--	1.5E+01	--	--	--	--	6.1E+00	2.5E+00	6.1E+00	8.1E+00	8.1E+00	8.1E+00	--	--	--	--	2.5E+00	Freshwater Chronic AWQC to protect aquatic species.
7439-96-5	Manganese (non-diet)	2.0E+03	--	8.8E+02	5.0E+01	--	3.8E+02	--	--	--	--	--	--	--	1.0E+02	--	--	2.0E+03	Lower Duwamish Waterway Groundwater Background.
7439-97-6	Mercury (elemental)	--	2.0E+00	5.7E-01	2.0E+00	--	4.8E+00	1.2E-02	7.7E-01	1.2E-02	2.5E-02	9.4E-01	2.5E-02	1.5E-01	3.0E-01	--	--	1.2E-02	Freshwater Chronic NTR/WaWQS to protect aquatic species.
7487-94-7	Mercury (inorganic salts)[16]	--	--	--	--	--	4.8E+00	--	--	--	--	--	--	--	--	--	--	4.8E+00	Surrogate Value: MTCA B groundwater to protect drinking water.
22967-92-6	Mercury (methyl mercury)	--	--	3.7E+00	--	--	1.6E+00	--	7.7E-01	--	--	9.4E-01	--	--	3.0E-01	--	--	3.0E-01	EPA AWQC to protect human consumption of seafood.
7439-98-7	Molybdenum	--	--	1.8E+02	--	--	8.0E+01	--	--	--	--	--	--	--	--	--	--	8.0E+01	Surrogate Value: MTCA B groundwater to protect drinking water.
7440-02-0	Nickel	--	--	7.3E+02	1.0E+02	--	3.2E+02	3.2E+02	5.2E+01	3.2E+02	8.2E+00	8.2E+00	8.2E+00	4.6E+03	4.6E+03	9.9E+01	6.6E+02	8.2E+00	Marine Chronic AWQC to protect aquatic species.
7782-49-2	Selenium	--	5.0E+01	1.8E+02	5.0E+01	--	8.0E+01	5.0E+00	5.0E+00	5.0E+00	7.1E+01	7.1E+01	7.1E+01	--	4.2E+03	1.5E+01	1.0E+02	5.0E+00	Freshwater Chronic NTR/Washington WQS to protect aquatic species.
7440-22-4	Silver	--	--	1.8E+02	1.0E+02	--	8.0E+01	--	--	--	--	--	--	--	--	2.2E+01	1.5E+02	2.2E+01	EPA R10 Tribal Consumption of Seafood.
7440-31-5	Tin	--	--	2.2E+04	--	--	9.6E+03	--	--	--	--	--	--	--	--	--	--	9.6E+03	Surrogate Value: MTCA B groundwater to protect drinking water.
7440-62-2	Vanadium	--	--	1.8E+02	--	--	1.4E+02	--	--	--	--	--	--	--	--	--	--	1.4E+02	Surrogate Value: MTCA B groundwater to protect drinking water.
7440-66-6	Zinc (metallic)	--	--	1.1E+04	5.0E+03	--	4.8E+03	2.1E+02	1.2E+02	2.1E+02	--	8.1E+01	8.1E+01	--	2.6E+04	5.6E+01	3.8E+02	5.6E+01	EPA R10 Tribal Consumption of Seafood.
Other Inorganics																			
57-12-5	Cyanide (free)	--	2.0E+02	7.3E+02	--	--	3.2E+02	5.2E+00	5.2E+00	5.2E+00	1.0E+00	1.0E+00	1.0E+00	2.2E+05	1.6E+04	2.4E+03	1.6E+04	1.0E+00	Marine Chronic AWQC to protect aquatic species.
74-90-8	Cyanide (hydrogen)	--	--	1.6E+00	2.0E+02	--	9.6E+00	--	--	--	--	--	--	--	--	--	--	1.6E+00	Surrogate Value: EPA RSL Tap Water Criteria.

Table 1
Groundwater Summary

CAS Number	Chemical[1]	Boeing Plant 2 Groundwater Background[2]	Protection of Drinking Water[3] – Drinking Water Standard/Criteria[4]					Protection of Aquatic Species – Freshwater Standards			Protection of Aquatic Species – Marine Standards			Protection of Human Health for Consumption of Fish and Shellfish in Marine Waters				EPA Proposed TMCL for Surface Water and Groundwater Discharging to Surface Water in the Lower Duwamish Waterway	
			Federal Primary Drinking Water Standards[5] EPA MCLs (µg/L)	EPA RSL Tap Water Criteria[6] (µg/L)	State Primary Drinking Water Standards[7] Washington MCLs (µg/L)	MTCA A Groundwater Cleanup Level[8] (µg/L)	MTCA B Groundwater Cleanup Level[9] (µg/L)	Federal National Toxics Rule[10] Chronic (µg/L)	Federal Ambient Water Quality Criteria[11,12] Chronic (µg/L)	Washington Surface Water Quality Standards[12,13] Chronic (µg/L)	Federal National Toxics Rule[10] Chronic (µg/L)	Federal Ambient Water Quality Criteria[11] Chronic (µg/L)	Washington Surface Water Quality Standards[12, 13] Chronic (µg/L)	Federal National Toxics Rule[10] Organism Only (µg/L)	Federal Ambient Water Quality Criteria[11] Organism Only (µg/L)	Lowest of Tribal and Asian/Pacific Islander Exposure Scenarios[14] Organism Only (µg/L)	MTCA Method B Surface Water[15] Fish/Shellfish (µg/L)	(µg/L)	Exposure Pathway Basis of TMCL
Volatile Organic Compounds (VOCs)																			
67-64-1	Acetone	--	--	2.2E+04	--	--	7.2E+03	--	--	--	--	--	--	--	--	1.1E+05	7.4E+05	1.1E+05	EPA R10 Tribal Consumption of Seafood.
71-43-2	Benzene	--	5.00E+00	4.1E-01	5.00E+00	--	8.0E-01	--	--	--	--	--	--	7.1E+01	5.1E+01	2.0E+00	1.4E+01	2.0E+00	EPA R10 Tribal Consumption of Seafood.
78-93-3	2-Butanone (MEK)	--	--	7.1E+03	--	--	4.8E+03	--	--	--	--	--	--	--	--	7.3E+04	4.9E+05	7.3E+04	EPA R10 Tribal Consumption of Seafood.
75-15-0	Carbon Disulfide	--	--	1.0E+03	--	--	8.0E+02	--	--	--	--	--	--	--	--	3.9E+03	2.6E+04	3.9E+03	EPA R10 Tribal Consumption of Seafood.
56-23-5	Carbon Tetrachloride	--	5.00E+00	4.4E-01	5.00E+00	--	6.3E-01	--	--	--	--	--	--	4.4E+00	1.6E+00	4.6E-01	3.2E+00	4.6E-01	EPA R10 Tribal Consumption of Seafood.
108-90-7	Chlorobenzene	--	1.00E+02	9.1E+01	1.00E+02	--	1.6E+02	--	--	--	--	--	--	2.1E+04	1.6E+03	2.7E+02	1.8E+03	2.7E+02	EPA R10 Tribal Consumption of Seafood.
75-00-3	Chloroethane	--	--	2.1E+04	--	--	--	--	--	--	--	--	--	--	--	--	--	2.1E+04	Surrogate Value: EPA RSL Tap Water Criteria.
67-66-3	Chloroform	--	8.00E+01	1.9E-01	8.00E+01	--	1.4E+00	--	--	--	--	--	--	4.7E+02	4.7E+02	9.4E+00	6.6E+01	9.4E+00	EPA R10 Tribal Consumption of Seafood.
74-87-3	Chloromethane	--	--	1.9E+02	--	--	--	--	--	--	--	--	--	--	--	--	--	1.9E+02	Surrogate Value: EPA RSL Tap Water Criteria.
106-43-4	4-Chlorotoluene	--	--	2.6E+03	--	--	--	--	--	--	--	--	--	--	--	--	--	2.6E+03	Surrogate Value: EPA RSL Tap Water Criteria.
95-50-1	1,2-Dichlorobenzene	--	6.00E+02	3.7E+02	6.00E+02	--	7.2E+02	--	--	--	--	--	--	1.7E+04	1.3E+03	4.4E+02	2.9E+03	4.4E+02	EPA R10 Tribal Consumption of Seafood.
106-46-7	1,4-Dichlorobenzene	--	7.50E+01	4.3E-01	7.50E+01	--	8.1E+00	--	--	--	--	--	--	2.6E+03	1.9E+02	1.7E+00	1.2E+01	1.7E+00	EPA R10 Tribal Consumption of Seafood.
75-34-3	1,1-Dichloroethane	--	--	2.4E+00	--	--	7.7E+00	--	--	--	--	--	--	--	--	3.3E+01	2.3E+02	3.3E+01	EPA R10 Tribal Consumption of Seafood.
107-06-2	1,2-Dichloroethane	--	5.00E+00	1.5E-01	5.00E+00	--	4.8E-01	--	--	--	--	--	--	9.9E+01	3.7E+01	3.6E+00	2.5E+01	3.6E+00	EPA R10 Tribal Consumption of Seafood.
75-35-4	1,1-Dichloroethene	--	7.00E+00	3.4E+02	7.00E+00	--	4.0E+02	--	--	--	--	--	--	3.2E+00	7.1E+03	2.3E+03	1.6E+04	3.2E+00	NTR to protect human consumption of seafood.
156-59-2	*cis* -1,2-Dichloroethene	--	7.00E+01	7.3E+01	7.00E+01	--	1.6E+01	--	--	--	--	--	--	--	--	1.3E+02	9.0E+02	1.3E+02	EPA R10 Tribal Consumption of Seafood.
156-60-5	*trans* -1,2-Dichloroethene	--	1.00E+02	1.1E+02	1.00E+02	--	1.6E+02	--	--	--	--	--	--	--	1.0E+04	9.4E+02	6.3E+03	9.4E+02	EPA R10 Tribal Consumption of Seafood.
78-87-5	1,2-Dichloropropane	--	5.00E+00	3.9E-01	5.00E+00	--	1.2E+00	--	--	--	--	--	--	--	1.5E+01	3.7E+00	2.6E+01	3.7E+00	EPA R10 Tribal Consumption of Seafood.
100-41-4	Ethylbenzene	--	7.00E+02	1.5E+00	7.00E+02	--	4.0E+00	--	--	--	--	--	--	2.9E+04	2.1E+03	1.7E+00	1.2E+01	1.7E+00	EPA R10 Tribal Consumption of Seafood.
98-82-8	Isopropylbenzene(cumene)	--	--	6.8E+02	--	--	8.0E+02	--	--	--	--	--	--	--	--	2.7E+02	1.8E+03	2.7E+02	EPA R10 Tribal Consumption of Seafood.
591-78-6	2-Hexanone	--	--	4.7E+01	--	--	4.0E+01	--	--	--	--	--	--	--	--	3.2E+03	2.2E+04	3.2E+03	EPA R10 Tribal Consumption of Seafood.
75-09-2	Methylene Chloride	--	5.00E+00	4.8E+00	5.00E+00	--	5.8E+00	--	--	--	--	--	--	1.6E+03	5.9E+02	6.1E+01	4.3E+02	6.1E+01	EPA R10 Tribal Consumption of Seafood.
108-10-1	Methyl Isobutyl Ketone	--	--	2.0E+03	--	--	6.4E+02	--	--	--	--	--	--	--	--	1.9E+04	1.2E+05	1.9E+04	EPA R10 Tribal Consumption of Seafood.
91-20-3	Naphthalene	--	--	1.4E-01	--	--	1.6E+02	--	--	--	--	--	--	--	--	2.6E+01	1.7E+02	2.6E+01	EPA R10 Tribal Consumption of Seafood.
100-42-5	Styrene	--	1.00E+02	1.6E+03	1.00E+02	--	1.6E+03	--	--	--	--	--	--	--	--	7.7E+04	5.2E+05	7.7E+04	EPA R10 Tribal Consumption of Seafood.
79-34-5	1,1,2,2-Tetrachloroethane	--	--	6.7E-02	--	--	2.2E-01	--	--	--	--	--	--	1.1E+01	4.0E+00	3.3E-01	2.3E+00	3.3E-01	EPA R10 Tribal Consumption of Seafood.
127-18-4	Tetrachloroethene (PCE)	--	5.00E+00	1.1E-01	5.00E+00	--	8.1E-02	--	--	--	--	--	--	8.9E+00	3.3E+00	2.1E-02	1.4E-01	2.1E-02	EPA R10 Tribal Consumption of Seafood.
108-88-3	Toluene	--	1.00E+03	2.3E+03	1.00E+03	--	6.4E+02	--	--	--	--	--	--	2.0E+05	1.5E+04	1.3E+03	8.7E+03	1.3E+03	EPA R10 Tribal Consumption of Seafood.
71-55-6	1,1,1-Trichloroethane	--	2.00E+02	9.1E+03	2.00E+02	--	1.6E+04	--	--	--	--	--	--	--	--	4.6E+04	3.1E+05	4.6E+04	EPA R10 Tribal Consumption of Seafood.
79-00-5	1,1,2-Trichloroethane	--	5.00E+00	1.5E+02	5.00E+00	--	7.7E-01	--	--	--	--	--	--	4.2E+01	1.6E+01	2.3E+00	1.6E+01	2.3E+00	EPA R10 Tribal Consumption of Seafood.
79-01-6	Trichloroethene (TCE)	--	5.00E+00	2.0E+00	5.00E+00	--	3.4E-01	--	--	--	--	--	--	8.1E+01	3.0E+01	5.1E-01	3.6E+00	5.1E-01	EPA R10 Tribal Consumption of Seafood.
120-82-1	1,2,4-trichlorobenzene	--	7.00E+01	2.3E+00	7.00E+01	--	1.5E+00	--	--	--	--	--	--	--	7.0E+01	1.3E-01	9.3E-01	1.3E-01	EPA R10 Tribal Consumption of Seafood.
75-69-4	Trichlorofluoromethane	--	--	1.3E+03	--	--	2.4E+03	--	--	--	--	--	--	--	--	6.9E+03	4.6E+04	6.9E+03	EPA R10 Tribal Consumption of Seafood.
76-13-1	1,1,2-Trichlorotrifluoroethane	--	--	5.9E+04	--	--	2.4E+05	--	--	--	--	--	--	--	--	--	--	5.9E+04	Surrogate Value: EPA RSL Tap Water Criteria.
75-01-4	Vinyl chloride	--	2.0E+00	1.6E-02	2.00E+00	--	2.9E-02	--	--	--	--	--	--	5.3E+02	2.4E+00	--	--	2.4E+00	EPA AWQC to protect human consumption of seafood.
108-38-3	m-Xylene	--	--	1.2E+03	--	--	1.6E+03	--	--	--	--	--	--	--	--	1.3E+03	8.9E+03	1.3E+03	EPA R10 Tribal Consumption of Seafood.
95-47-6	o-Xylene	--	--	1.2E+03	--	--	1.6E+03	--	--	--	--	--	--	--	--	1.6E+03	1.1E+04	1.6E+03	EPA R10 Tribal Consumption of Seafood.
106-42-3	p-Xylene	--	--	1.2E+03	--	--	1.6E+03	--	--	--	--	--	--	--	--	1.6E+03	1.1E+04	1.6E+03	EPA R10 Tribal Consumption of Seafood.
10330-20-7	Xylenes (total)	--	1.0E+04	2.0E+02	1.00E+04	--	1.6E+03	--	--	--	--	--	--	--	--	1.5E+03	1.0E+04	1.5E+03	EPA R10 Tribal Consumption of Seafood.

Table 1
Groundwater Summary

CAS Number	Chemical[1]	Boeing Plant 2 Groundwater Background[2]	Protection of Drinking Water[3] – Drinking Water Standard/Criteria[4]					Protection of Aquatic Species – Freshwater Standards			Protection of Aquatic Species – Marine Standards			Protection of Human Health for Consumption of Fish and Shellfish in Marine Waters				EPA Proposed TMCL for Surface Water and Groundwater Discharging to Surface Water in the Lower Duwamish Waterway	
			Federal Primary Drinking Water Standards[5] EPA MCLs (µg/L)	EPA RSL Tap Water Criteria[6] (µg/L)	State Primary Drinking Water Standards[7] Washington MCLs (µg/L)	MTCA A Groundwater Cleanup Level[8] (µg/L)	MTCA B Groundwater Cleanup Level[9] (µg/L)	Federal National Toxics Rule[10] Chronic (µg/L)	Federal Ambient Water Quality Criteria[11,12] Chronic (µg/L)	Washington Surface Water Quality Standards[12,13] Chronic (µg/L)	Federal National Toxics Rule[10] Chronic (µg/L)	Federal Ambient Water Quality Criteria[11] Chronic (µg/L)	Washington Surface Water Quality Standards[12, 13] Chronic (µg/L)	Federal National Toxics Rule[10] Organism Only (µg/L)	Federal Ambient Water Quality Criteria[11] Organism Only (µg/L)	Lowest of Tribal and Asian/Pacific Islander Exposure Scenarios[14] Organism Only (µg/L)	MTCA Method B Surface Water[15] Fish/Shellfish (µg/L)	(µg/L)	Exposure Pathway Basis of TMCL
Semivolatile Organic Compounds (SVOCs)																			
83-32-9	Acenaphthene	--	--	2.2E+03	--	--	9.6E+02	--	--	--	--	--	--	--	9.9E+02	1.2E+02	7.7E+02	1.2E+02	EPA R10 Tribal Consumption of Seafood.
208-96-8	Acenaphthylene	--	--	--	--	--	--	--	--	--	--	--	--	--	--	--	--	--	--
120-12-7	Anthracene	--	--	1.1E+04	--	--	4.8E+03	--	--	--	--	--	--	1.1E+05	4.0E+04	2.0E+02	1.3E+03	2.0E+02	EPA R10 Tribal Consumption of Seafood.
191-24-2	Benzo(g,h,i)perylene	--	--	--	--	--	--	--	--	--	--	--	--	--	--	--	--	--	--
117-81-7	Bis(2-ethylhexyl)phthalate	--	6.0E+00	4.8E+00	--	--	6.3E+00	--	--	--	--	--	--	5.9E+00	2.2E+00	1.2E+00	8.7E+00	1.2E+00	EPA R10 Tribal Consumption of Seafood.
85-68-7	Butylbenzyl phthalate	--	--	3.5E+01	--	--	4.6E+01	--	--	--	--	--	--	--	1.9E+03	4.1E-01	2.9E+00	4.1E-01	EPA R10 Tribal Consumption of Seafood.
59-50-7	4-chloro-3-methylphenol	--	--	3.7E+03	--	--	--	--	--	--	--	--	--	--	--	--	--	3.7E+03	Surrogate Value: EPA RSL Tap Water Criteria.
132-64-9	*Dibenzofuran [17]*	--	--	*3.7E+01*	--	--	*3.2E+01*	--	--	--	--	--	--	--	--	--	--	*3.2E+01*	*Surrogate Value: MTCA B groundwater to protect drinking water.*
84-74-2	Di-n-butylphthalate	--	--	3.7E+03	--	--	1.6E+03	--	--	--	--	--	--	1.2E+04	4.5E+03	4.7E+01	3.1E+02	4.7E+01	EPA R10 Tribal Consumption of Seafood.
84-66-2	Diethylphthalate	--	--	2.9E+04	--	--	1.3E+04	--	--	--	--	--	--	1.2E+05	4.4E+04	1.8E+04	1.2E+05	1.8E+04	EPA R10 Tribal Consumption of Seafood.
105-67-9	2,4-Dimethylphenol	--	--	7.3E+02	--	--	3.2E+02	--	--	--	--	--	--	--	8.5E+02	6.6E+02	4.4E+03	6.6E+02	EPA R10 Tribal Consumption of Seafood.
131-11-3	Dimethylphthalate	--	--	--	--	--	--	--	--	--	--	--	--	2.9E+06	1.1E+06	--	--	1.1E+06	Marine Chronic AWQC to protect human consumption of seafood.
117-84-0	Di-n-octyl phthalate	--	--	--	--	--	--	--	--	--	--	--	--	--	--	--	--	--	--
206-44-0	Fluoranthene	--	--	1.5E+03	--	--	6.4E+02	--	--	--	--	--	--	3.7E+02	1.4E+02	1.1E+01	7.4E+01	1.1E+01	EPA R10 Tribal Consumption of Seafood.
86-73-7	Fluorene	--	--	1.5E+03	--	--	6.4E+02	--	--	--	--	--	--	1.4E+04	5.3E+03	4.5E+01	3.0E+02	4.5E+01	EPA R10 Tribal Consumption of Seafood.
7440-62-2	1-Methylnaphthalene	--	--	2.3E+00	--	--	--	--	--	--	--	--	--	--	--	--	--	2.3E+00	Surrogate Value: EPA RSL Tap Water Criteria.
91-57-6	2-Methylnaphthalene	--	--	1.5E+02	--	--	6.4E+01	--	--	--	--	--	--	--	--	--	--	6.4E+01	Surrogate Value: MTCA B groundwater to protect drinking water.
95-48-7	2-Methylphenol (o-cresol)	--	--	1.8E+03	--	--	8.0E+02	--	--	--	--	--	--	--	--	3.1E+03	2.0E+04	3.1E+03	EPA R10 Tribal Consumption of Seafood.
106-44-5	4-Methylphenol (p-cresol)	--	--	1.8E+02	--	--	8.0E+01	--	--	--	--	--	--	--	--	3.3E+02	2.2E+03	3.3E+02	EPA R10 Tribal Consumption of Seafood.
91-20-3	Naphthalene	--	--	1.4E-01	--	--	3.2E+02	--	--	--	--	--	--	--	--	1.1E+02	7.5E+02	2.6E+01	EPA R10 Tribal Consumption of Seafood.
85-01-8	Phenanthrene	--	--	--	--	--	--	--	--	--	--	--	--	--	--	--	--	--	--
108-95-2	Phenol	--	--	1.1E+04	--	--	4.8E+03	--	--	--	--	--	--	4.6E+06	8.6E+05	4.1E+04	2.7E+05	4.1E+04	EPA R10 Tribal Consumption of Seafood.
129-00-0	Pyrene	--	--	1.1E+03	--	--	4.8E+02	--	--	--	--	--	--	1.1E+04	4.0E+03	9.8E+00	6.6E+01	9.8E+00	EPA R10 Tribal Consumption of Seafood.

Table 1
Groundwater Summary

CAS Number	Chemical[1]	Boeing Plant 2 Groundwater Background[2]	Protection of Drinking Water[3] – Drinking Water Standard/Criteria[4]					Protection of Aquatic Species – Freshwater Standards			Protection of Aquatic Species – Marine Standards			Protection of Human Health for Consumption of Fish and Shellfish in Marine Waters				EPA Proposed TMCL for Surface Water and Groundwater Discharging to Surface Water in the Lower Duwamish Waterway	
			Federal Primary Drinking Water Standards[5] EPA MCLs (µg/L)	EPA RSL Tap Water Criteria[6] (µg/L)	State Primary Drinking Water Standards[7] Washington MCLs (µg/L)	MTCA A Groundwater Cleanup Level[8] (µg/L)	MTCA B Groundwater Cleanup Level[9] (µg/L)	Federal National Toxics Rule[10] Chronic (µg/L)	Federal Ambient Water Quality Criteria[11,12] Chronic (µg/L)	Washington Surface Water Quality Standards[12,13] Chronic (µg/L)	Federal National Toxics Rule[10] Chronic (µg/L)	Federal Ambient Water Quality Criteria[11] Chronic (µg/L)	Washington Surface Water Quality Standards[12, 13] Chronic (µg/L)	Federal National Toxics Rule[10] Organism Only (µg/L)	Federal Ambient Water Quality Criteria[11] Organism Only (µg/L)	Lowest of Tribal and Asian/Pacific Islander Exposure Scenarios[14] Organism Only (µg/L)	MTCA Method B Surface Water[15] Fish/Shellfish (µg/L)	(µg/L)	Exposure Pathway Basis of TMCL
Mutagenic Carcinogenic Polycyclic Aromatic Hydrocarbons (cPAHs)																			
56-55-3	Benzo(a) anthracene	--	--	2.9E-02		--		--	--	--	--	--	--	3.1E-02	1.8E-02	1.8E-03	2.9E-02	1.8E-03	EPA R10 Tribal Consumption of Seafood.
50-32-8	Benzo(a) pyrene	--	2.0E-01	2.9E-03		--		--	--	--	--	--	--	3.1E-02	1.8E-02	1.8E-04	2.9E-03	1.8E-04	EPA R10 Tribal Consumption of Seafood.
205-99-2	Benzo (b) fluoranthene	--	--	2.9E-02		--		--	--	--	--	--	--	3.1E-02	1.8E-02	1.8E-03	2.9E-02	1.8E-03	EPA R10 Tribal Consumption of Seafood.
207-08-9	Benzo(k) fluoranthene	--	--	2.9E-01		--		--	--	--	--	--	--	3.1E-02	1.8E-02	1.8E-03	2.9E-02	1.8E-03	EPA R10 Tribal Consumption of Seafood.
218-01-9	Chrysene	--	--	2.9E+00		--		--	--	--	--	--	--	3.1E-02	1.8E-02	1.8E-02	2.9E-01	1.8E-02	EPA R10 Tribal Consumption of Seafood.
53-70-3	Dibenz(a,h)anthracene	--	--	2.9E-03		--		--	--	--	--	--	--	3.1E-02	1.8E-02	1.8E-03	2.9E-02	1.8E-03	EPA R10 Tribal Consumption of Seafood.
193-39-5	Indeno(1,2,3-cd)pyrene	--	--	2.9E-02		--		--	--	--	--	--	--	3.1E-02	1.8E-02	1.8E-03	2.9E-02	1.8E-03	EPA R10 Tribal Consumption of Seafood.
--	Benzo(a)pyrene TEQ[18]	--	2.0E-01	2.9E-03	2.0E-01	--	1.2E-02	--	--	--	--	--	--	3.1E-02	1.8E-02	1.8E-04	2.9E-03	1.8E-04	EPA R10 Tribal Consumption of Seafood.
Polychlorinated Biphenyls (PCBs)																			
53469-21-9	Aroclor 1016/1242	--	--	3.4E-02	--	--	4.4E-02	--	--	--	--	--	--	--	--	2.3E-05	1.6E-04	2.3E-05	EPA R10 Tribal Consumption of Seafood.
12672-29-6	Aroclor 1248	--	--	3.4E-02	--	--	4.4E-02	--	--	--	--	--	--	--	--	2.3E-05	1.6E-04	2.3E-05	EPA R10 Tribal Consumption of Seafood.
11097-69-1	Aroclor 1254	--	--	3.4E-02	--	--	4.4E-02	--	--	--	3.0E-02	--	--	--	--	5.5E-06	3.9E-05	5.5E-06	EPA R10 Tribal Consumption of Seafood.
37324-23-2	Aroclor 1260	--	--	3.4E-02	--	--	4.4E-02	--	--	--	3.0E-02	--	--	--	--	2.3E-05	1.6E-04	2.3E-05	EPA R10 Tribal Consumption of Seafood.
1336-36-3	Total PCBs	--	--	3.4E-02	--	--	4.4E-02	--	1.4E-02	1.4E-02	--	3.0E-02	3.0E-02	1.7E-04	6.4E-05	2.3E-05	1.6E-04	2.3E-05	EPA R10 Tribal Consumption of Seafood.
Total Petroleum Hydrocarbons (TPH)																			
--	TPH - Gasoline (Benzene Present)	--	--	--	--	8.0E+02	--	--	--	--	--	--	--	--	--	--	--	1.0E+03	Surrogate Value: MTCA A Groundwater Cleanup Level.
--	TPH - Aged Gasoline and Mineral Spirits	--	--	--	--	1.0E+03	--	--	--	--	--	--	--	--	--	--	--	8.0E+02	Surrogate Value: MTCA A Groundwater Cleanup Level.
--	TPH - Diesel #2	--	--	--	--	5.0E+02	--	--	--	--	--	--	--	--	--	--	--	5.0E+02	Surrogate Value: MTCA A Groundwater Cleanup Level.
--	TPH - Heavy Oils	--	--	--	--	5.0E+02	--	--	--	--	--	--	--	--	--	--	--	5.0E+02	Surrogate Value: MTCA A Groundwater Cleanup Level.

Notes:

Washington state regulates carcinogenic polycyclic aromatic hydrocarbons as benzo(a)pyrene Toxic Equivalent Quantity (TEQ); therefore, no individual groundwater cleanup levels have been developed, and the cells are "grayed out." Refer to https://fortress.wa.gov/ecy/clarc/FocusSheets/tef.pdf.

1 Not all chemicals are constituents needing TMCLs at Boeing Plant 2.
2 Background concentration in groundwater as per EPA approval of the Technical Memorandum on background, May 2008.
3 Drinking water standards/criteria are not applicable to Boeing Plant 2 unless no other applicable standard exists for a constituent not needing a TMCL in groundwater.
4 The standards are potentially applicable to groundwater that may be used for drinking water supplies. Ecology determines the maximum beneficial use of groundwater, which may or may not include drinking.
5 National Primary Drinking Water Regulations, Maximum Contaminant Levels (MCLs); http://water.epa.gov/drink/contaminants/index.cfm.
6 EPA RSL, Residential Tapwaters; http://www.epa.gov/region9/superfund/prg/.
7 Washington Primary Drinking Water Standards WAC 246-290-130, Maximum Contaminant Levels (MCLs).
8 Surrogate values used for TPH based on drinking water consumption because the only TPH surface water criteria is based on visual sheen. These values presented in Table 720-1 in conjunction with regulations present in MTCA 173-340-720 (3)(b)(i).
9 Standard MTCA Method B uses WAC 173-340-740; equations 730-1 and 730-2 (Ecology 2007). Parameters and toxicity factors can be found in associated tables in this attachment.
10 National Toxics Rule (NTR), 40 CFR 131.36.
11 EPA Ambient Water Quality Criteria (AWQCs), Clean Water Action Section 304.
12 Washington Surface Water Quality Standards; WAC 173-201A, Surface Water Quality Criteria.
13 EPA and Ecology fish consumption scenarios are based on MTCA Method B Surface Water Equations (equations 730-1 and 730-2); however, they use different exposure assumptions. Details are given in associated tables in this attachment.
14 This column uses the approach described in Note 8, but selects the lower concentrations that are protective of special populations including Tribal and Asian/Pacific Islander; the lowest concentration is always associated with Tribal exposure.
15 This column is included for comparison only and is based on the default exposure scenario in MTCA 173-340-730.
16 Mercuric chloride used as a surrogate.
17 The provisional toxicity factors for this chemical are semi-quantative and should be used for screening purposes only.
18 Because cPAHs are considered mutagenic by EPA, EPA Tribal and Pacific Islander exposure scenarios include an early life correction.

Abbreviations:

BCF Bioconcentration factor
CAS Chemical abstract number
CLARC Cleanup Levels and Risk Calculation
Ecology Washington State Department of Ecology
EPA U.S. Environmental Protection Agency
MTCA Model Toxics Control Act
R10 Region 10
RSL Regional screening level

Table 2
Soil Summary

CAS Number	Chemical[1]	Puget Sound Background[2] (mg/kg)	Residential: EPA — EPA RSL Residential Includes Ingestion, Dermal, and Inhalation[3] (mg/kg)	Residential: Ecology — MTCA Method A Unrestricted Land Use Includes CLARC Toxicity Factors[4] (mg/kg)	Residential: Ecology — MTCA Method B Unrestricted Land Use Includes CLARC Toxicity Factors[5] (mg/kg)	Industrial: EPA Modified — EPA RSL Industrial Includes Ingestion, Dermal, and Inhalation[6] (mg/kg)	Industrial: Ecology — MTCA Method C Industrial Land Use Includes CLARC Toxicity Factors[5] (mg/kg)	Sediment Protection Ecology — SMS Sediment Quality Standards[7] (mg/kg dry weight)	Groundwater Protection Ecology — Soil Level to Protect Groundwater Using Three-phase Model[8] (mg/kg)	EPA Proposed Soil TMCL to Protect all Pathways (mg/kg)	Exposure Pathway Basis of TMCL
Metals											
7429-90-5	Aluminum	3.3E+04	7.7E+04	--	8.0E+04	5.0E+05	3.5E+06	--	--	7.7E+04	EPA RSL Residential Including Ingestion, Dermal, and Inhalation.
7440-36-0	Antimony (metallic)	--	3.1E+01	--	3.2E+01	2.0E+02	1.4E+03	--	7.8E+02	3.1E+01	EPA RSL Residential Including Ingestion, Dermal, and Inhalation.
7440-38-2	Arsenic (inorganic)	2.0E+01	3.9E-01	--	6.7E-01	8.7E+00	8.8E+01	5.7E+01	--	2.0E+01	Washington State Background.
7440-39-3	Barium	--	1.5E+04	--	1.6E+04	9.9E+04	7.0E+05	--	1.0E+02	1.0E+02	Soil to protect groundwater for Tribal seafood.
7440-41-7	Beryllium	6.1E-01	1.6E+02	--	1.6E+02	1.0E+03	7.0E+03	--	3.1E+02	1.6E+02	EPA RSL Residential Including Ingestion, Dermal, and Inhalation.
7440-43-9	Cadmium	7.7E-01	7.0E+01	--	8.0E+01	4.5E+02	3.5E+03	5.1E+00	4.0E+00	4.0E+00	Soil to protect groundwater for aquatic species.
18540-29-9	Chromium (VI)	--	1.2E+00	--	2.4E+02	2.8E+01	1.0E+04	--	--	1.2E+00	EPA RSL Residential Including Ingestion, Dermal, and Inhalation.
7440-48-4	Cobalt	--	2.3E+01	--	2.4E+01	1.5E+02	1.0E+03	--	1.2E+01	1.2E+01	Surrogate Value: soil to protect groundwater for drinking water use.
7440-50-8	Copper	3.6E+01	3.1E+03	--	3.2E+03	2.0E+04	1.4E+05	3.9E+02	8.0E+01	8.0E+01	Soil to protect groundwater background.
7439-89-6	Iron	5.9E+04	5.5E+04	--	5.6E+04	3.6E+05	2.4E+06	--	--	5.9E+04	Puget Sound Background.
7439-92-1	Lead[9]	2.4E+01	--	--	2.5E+02	--	1.0E+03	4.5E+02	7.9E+02	2.5E+02	MTCA A Residential.
7439-96-5	Manganese (non-diet)	1.2E+03	1.8E+03	--	1.9E+03	1.2E+04	8.4E+04	--	--	1.8E+03	EPA RSL Residential Including Ingestion, Dermal, and Inhalation.
7439-97-6	Mercury (elemental)	7.0E-02	5.6E+00	--	2.4E+01	2.8E+01	1.0E+03	4.1E-01	1.5E+00	1.5E+00	Soil to protect groundwater for aquatic species.
7487-94-7	Mercury (inorganic salts)[10]	--	2.3E+01	--	2.4E+01	1.5E+02	1.0E+03	--	--	2.3E+01	EPA RSL Residential Including Ingestion, Dermal, and Inhalation.
22967-92-6	Mercury (methyl mercury)	--	7.8E+00	--	8.0E+00	5.1E+01	3.5E+02	--	3.8E+00	3.8E+00	Soil to protect groundwater for Tribal seafood.
7439-98-7	Molybdenum	--	3.9E+02	--	4.0E+02	2.5E+03	1.7E+04	--	2.0E+01	2.0E+01	Surrogate Value: soil to protect groundwater for drinking water use.
7440-02-0	Nickel	4.8E+01	1.5E+03	--	1.6E+03	1.0E+04	7.0E+04	--	2.1E+02	2.1E+02	Soil to protect groundwater for aquatic species.
7782-49-2	Selenium	--	3.9E+02	--	4.0E+02	2.5E+03	1.7E+04	--	1.0E+00	1.0E+00	Soil to protect groundwater for aquatic species.
7440-22-4	Silver	--	3.9E+02	--	4.0E+02	2.5E+03	1.7E+04	6.1E+00	1.7E+02	1.7E+02	Soil to protect groundwater for Tribal seafood.
7440-31-5	Tin	--	4.7E+04	--	4.8E+04	3.1E+05	2.1E+06	--	1.5E+05	4.7E+04	EPA RSL Residential Including Ingestion, Dermal, and Inhalation.
1314-62-1	Vanadium (as vanadium pentoxide)	--	7.0E+02	--	7.2E+02	4.6E+03	3.1E+04	--	2.9E+03	7.0E+02	EPA RSL Residential Including Ingestion, Dermal, and Inhalation.
7440-66-6	Zinc (metallic)	8.5E+01	2.3E+04	--	2.4E+04	1.5E+05	1.0E+06	4.1E+02	1.4E+03	1.4E+03	Soil to protect groundwater for Tribal seafood.
Other Inorganics											
57-12-5	Cyanide (free)	--	1.6E+03	--	1.6E+03	1.0E+04	7.0E+04	--	2.0E+01	2.0E+01	Soil to protect groundwater for aquatic species.
74-90-8	Cyanide (hydrogen)	--	4.6E+00	--	4.8E+01	2.0E+01	2.1E+03	--	--	4.6E+00	EPA RSL Residential Including Ingestion, Dermal, and Inhalation.
Volatile Organic Constituents											
67-64-1	Acetone		6.1E+04	--	7.2E+04	3.7E+05	3.1E+06	--	5.1E+02	5.1E+02	Soil to protect groundwater for Tribal seafood.
71-43-2	Benzene		1.1E+00	--	1.8E+01	4.9E+01	2.4E+03	--	9.3E-02	9.3E-02	Soil to protect groundwater for Tribal seafood.
78-93-3	2-Butanone (MEK)		2.8E+04	--	4.8E+04	1.5E+05	2.1E+06	--	4.3E+02	4.3E+02	Soil to protect groundwater for Tribal seafood.
75-15-0	Carbon Disulfide		8.2E+02	--	8.0E+03	3.6E+03	3.5E+05	--	7.5E+01	7.5E+01	Soil to protect groundwater for Tribal seafood.
56-23-5	Carbon Tetrachloride		6.1E-01	--	1.4E+01	2.8E+01	1.9E+03	--	2.1E-02	2.1E-02	Soil to protect groundwater for Tribal seafood.
108-90-7	Chlorobenzene		2.9E+02	--	1.6E+03	1.3E+03	7.0E+04	--	2.6E+01	2.6E+01	Soil to protect groundwater for Tribal seafood.
75-00-3	Chloroethane		1.4E+04	--	--	6.1E+04	--	--	2.8E+02	2.8E+02	Surrogate Value: soil to protect groundwater for drinking water use.
67-66-3	Chloroform		3.0E-01	--	8.0E+02	1.5E+01	3.5E+04	--	2.0E-01	2.0E-01	Soil to protect groundwater for Tribal seafood.
74-87-3	Chloromethane		1.2E+02	--	--	5.0E+02	--	--	1.6E+00	1.6E+00	Surrogate Value: soil to protect groundwater for drinking water use.
106-43-4	4-Chlorotoluene		--	--	--	--	--	--	4.0E+02	4.0E+02	Surrogate Value: soil to protect groundwater for drinking water use.
95-50-1	1,2-Dichlorobenzene		1.9E+03	--	7.2E+03	8.9E+03	3.1E+05	--	6.8E+01	6.8E+01	Soil to protect groundwater for Tribal seafood.
106-46-7	1,4-Dichlorobenzene		2.4E+00	--	--	1.2E+02	--	--	3.5E-01	3.5E-01	Soil to protect groundwater for Tribal seafood.
75-34-3	1,1-Dichloroethane		3.3E+00	--	1.6E+04	1.6E+02	7.0E+05	--	7.1E-01	7.1E-01	Soil to protect groundwater for Tribal seafood.
107-06-2	1,2-Dichloroethane		4.3E-01	--	1.1E+01	2.0E+01	1.4E+03	--	7.0E-02	7.0E-02	Soil to protect groundwater for Tribal seafood.
75-35-4	1,1-Dichloroethene		2.4E+02	--	4.0E+03	1.0E+03	1.7E+05	--	8.1E-02	8.1E-02	Soil to protect groundwater for Tribal seafood.
156-59-2	*cis* -1,2-Dichloroethene		1.6E+02	--	1.6E+02	1.0E+03	7.0E+03	--	2.6E+00	2.6E+00	Soil to protect groundwater for Tribal seafood.
156-60-5	*trans* -1,2-Dichloroethene		1.6E+03	--	1.6E+03	1.0E+04	7.0E+04	--	1.9E+01	1.9E+01	Soil to protect groundwater for Tribal seafood.
78-87-5	1,2-Dichloropropane		8.9E-01	--	--	4.2E+01	--	--	9.2E-02	9.2E-02	Soil to protect groundwater for Tribal seafood.
100-41-4	Ethylbenzene		5.4E+00	--	8.0E+03	2.4E+02	3.5E+05	--	2.3E-01	2.3E-01	Soil to protect groundwater for Tribal seafood.
98-82-8	Isopropylbenzene(cumene)		2.1E+03	--	8.0E+03	9.5E+03	3.5E+05	--	7.8E+01	7.8E+01	Soil to protect groundwater for Tribal seafood.
591-78-6	2-Hexanone		2.1E+02	--	4.0E+02	1.1E+03	1.7E+04	--	3.2E+01	3.2E+01	Soil to protect groundwater for Tribal seafood.
75-09-2	Methylene Chloride		1.1E+01	--	1.3E+02	4.7E+02	1.8E+04	--	6.5E-01	6.5E-01	Soil to protect groundwater for Tribal seafood.
108-10-1	Methyl Isobutyl Ketone		5.3E+03	--	6.4E+03	3.2E+04	2.8E+05	--	1.7E+02	1.7E+02	Soil to protect groundwater for Tribal seafood.
91-20-3	Naphthalene		3.6E+00	--	1.6E+03	1.8E+02	7.0E+04	2.1E+00	1.6E+01	3.6E+00	EPA RSL Residential Including Ingestion, Dermal, and Inhalation.
100-42-5	Styrene		6.3E+03	--	1.6E+04	3.1E+04	7.0E+05	--	2.1E+04	6.3E+03	EPA RSL Residential Including Ingestion, Dermal, and Inhalation.
79-34-5	1,1,2,2-Tetrachloroethane		5.6E-01	--	5.0E+00	2.3E+01	6.6E+02	--	1.3E-02	1.3E-02	Soil to protect groundwater for Tribal seafood.
127-18-4	Tetrachloroethene (PCE)		5.6E-01	--	8.0E+02	1.8E+01	3.5E+04	--	1.6E-03	1.6E-03	Soil to protect groundwater for Tribal seafood.
108-88-3	Toluene		5.0E+03	--	6.4E+03	2.9E+04	2.8E+05	--	1.0E+02	1.0E+02	Soil to protect groundwater for Tribal seafood.
71-55-6	1,1,1-Trichloroethane		8.7E+03	--	1.6E+05	3.7E+04	7.0E+06	--	1.9E+03	1.9E+03	Soil to protect groundwater for Tribal seafood.
79-00-5	1,1,2-Trichloroethane		1.1E+00	--	1.8E+01	4.8E+01	2.3E+03	--	7.3E-02	7.3E-02	Soil to protect groundwater for Tribal seafood.
79-01-6	Trichloroethene (TCE)		2.7E-01	--	1.1E+01	1.3E+01	1.0E+03	--	1.8E-02	1.8E-02	Soil to protect groundwater for Tribal seafood.
120-82-1	1,2,4-trichlorobenzene		2.2E+01	--	3.4E+01	4.9E+02	4.5E+03	--	8.0E-02	8.0E-02	Soil to protect groundwater for Tribal seafood.
75-69-4	Trichlorofluoromethane		7.8E+02	--	2.4E+04	3.3E+03	1.0E+06	--	2.0E+02	2.0E+02	Soil to protect groundwater for Tribal seafood.
76-13-1	1,1,2-Trichlorotrifluoroethane		4.3E+02	--	2.4E+06	1.8E+03	1.0E+08	--	7.1E+03	4.3E+02	EPA RSL Residential Including Ingestion, Dermal, and Inhalation.
75-01-4	Vinyl chloride[11]		8.1E-05	--	6.7E-01	4.1E-03	8.8E+01	--	3.4E-02	8.1E-05	EPA RSL Residential Including Ingestion, Dermal, and Inhalation.
108-38-3	m-Xylene		3.4E+03	--	1.6E+04	1.5E+04	7.0E+05	--	1.6E+02	1.6E+02	Soil to protect groundwater for Tribal seafood.
95-47-6	o-Xylene		3.8E+03	--	1.6E+04	1.8E+04	7.0E+05	--	2.0E+02	2.0E+02	Soil to protect groundwater for Tribal seafood.
106-42-3	p-Xylene		3.4E+03	--	1.6E+04	1.6E+04	7.0E+05	--	2.3E+02	2.3E+02	Soil to protect groundwater for Tribal seafood.
10330-20-7	Xylenes (total)		6.3E+02	--	1.6E+04	2.7E+03	7.0E+05	--	2.0E+02	2.0E+02	Soil to protect groundwater for Tribal seafood.

Table 2
Soil Summary

Semivolatile Organic Compounds (SVOCs)											
83-32-9	Acenaphthene	--	3.4E+03	--	4.8E+03	2.1E+04	2.1E+05	5.0E-01	2.3E+02	2.3E+02	Soil to protect groundwater for Tribal seafood.
208-96-8	Acenaphthylene	--	--	--	--	--	--	1.3E+00	--	--	SMS SQS may be appropriate for bank soils.
120-12-7	Anthracene	--	1.7E+04	--	2.4E+04	1.1E+05	1.1E+06	9.6E-01	1.6E+03	1.6E+03	Soil to protect groundwater for Tribal seafood.
191-24-2	Benzo(g,h,i)perylene	--	--	--	--	--	--	--	--	--	--
117-81-7	Bis(2-ethylhexyl)phthalate	--	3.5E+01	--	7.1E+01	7.7E+02	9.4E+03	1.3E+00	5.7E+01	3.5E+01	EPA RSL Residential Including Ingestion, Dermal, and Inhalation.
85-68-7	Butylbenzyl phthalate	--	2.6E+02	--	5.3E+02	5.7E+03	6.9E+04	6.3E-02	1.7E+00	1.7E+00	Soil to protect groundwater for Tribal seafood.
59-50-7	4-chloro-3-methylphenol	--	6.1E+03	--	8.0E+03	3.8E+04	3.5E+05	--	7.4E+02	7.4E+02	Surrogate Value: soil to protect groundwater for drinking water use
132-64-9	*Dibenzofuran* [12]	--	--	--	*1.6E+02*	--	*7.0E+03*	*5.4E-01*	*1.2E+02*	*1.2E+02*	*Semi-quantitative: soil to protect groundwater for drinking water use.*
84-74-2	Di-n-butylphthalate	--	6.1E+03	--	8.0E+03	3.8E+04	3.5E+05	1.4E+00	2.6E+01	2.6E+01	Soil to protect groundwater for Tribal seafood.
84-66-2	Diethylphthalate	--	4.9E+04	--	6.4E+04	3.1E+05	2.8E+06	2.0E-01	7.6E+02	7.6E+02	Soil to protect groundwater for Tribal seafood.
105-67-9	2,4-Dimethylphenol	--	1.2E+03	--	1.6E+03	7.7E+03	7.0E+04	2.9E-02	9.5E+01	9.5E+01	Soil to protect groundwater for Tribal seafood.
131-11-3	Dimethylphthalate	--	--	--	--	--	--	7.1E-02	--	--	SMS SQS may be appropriate for bank soils.
117-84-0	Di-n-octyl phthalate	--	--	--	--	--	--	6.2E+00	--	--	SMS SQS may be appropriate for bank soils.
206-44-0	Fluoranthene	--	2.3E+03	--	3.2E+03	1.4E+04	1.4E+05	1.7E+00	2.3E+02	2.3E+02	Soil to protect groundwater for Tribal seafood.
86-73-7	Fluorene	--	2.3E+03	--	3.2E+03	1.4E+04	1.4E+05	5.4E-01	1.5E+02	1.5E+02	Soil to protect groundwater for Tribal seafood.
7440-62-2	1-Methylnaphthalene	--	1.6E+01	--	3.4E+01	3.5E+02	4.5E+03	1.6E+01	--	1.6E+01	EPA RSL Residential Including Ingestion, Dermal, and Inhalation.
91-57-6	2-Methylnaphthalene	--	2.3E+02	--	3.2E+02	1.4E+03	1.4E+04	6.7E-01	--	2.3E+02	EPA RSL Residential Including Ingestion, Dermal, and Inhalation.
95-48-7	2-Methylphenol (o-cresol)	--	3.0E+03	--	4.0E+03	1.9E+04	1.8E+05	6.3E-02	2.5E+02	2.5E+02	Soil to protect groundwater for Tribal seafood.
106-44-5	4-Methylphenol (p-cresol)	--	3.0E+02	--	4.0E+02	1.9E+03	1.8E+04	6.7E-01	4.1E+01	4.1E+01	Soil to protect groundwater for Tribal seafood.
91-20-3	Naphthalene	--	3.6E+00	--	1.6E+03	1.8E+02	7.0E+04	2.1E+00	1.6E+01	3.6E+00	EPA RSL Residential Including Ingestion, Dermal, and Inhalation.
85-01-8	Phenanthrene	--	--	--	--	--	--	1.5E+00	--	--	SMS SQS may be appropriate for bank soils.
108-95-2	Phenol	--	1.8E+04	--	2.4E+04	1.2E+05	1.1E+06	4.2E-01	1.9E+03	1.9E+03	Soil to protect groundwater for Tribal seafood.
129-00-0	Pyrene	--	1.7E+03	--	2.4E+03	1.1E+04	1.1E+05	2.6E+00	2.4E+02	2.4E+02	Soil to protect groundwater for Tribal seafood.
Mutagenic Carcinogenic Polycyclic Aromatic Hydrocarbons (cPAHs)											
56-55-3	Benzo(a) anthracene	--						1.1E+02			
50-32-8	Benzo(a) pyrene	--						9.9E+01			
205-99-2	Benzo (b) fluoranthene	--						2.3E+02			
207-08-9	Benzo(k) fluoranthene	--						2.3E+02			
218-01-9	Chrysene	--						1.1E+02			
53-70-3	Dibenz(a,h)anthracene	--						1.2E+01			
193-39-5	Indeno(1,2,3-cd)pyrene	--						3.4E+01			
--	Benzo(a)pyrene TEQ[13]	--	1.5E-02	--	1.4E-01	1.4E+00	1.8E+01	--	5.7E-02	1.5E-02	EPA RSL Residential with Early Life Correction.
Polychlorinated Biphenyls (PCBs)											
53469-21-9	Aroclor 1016/1242	--	2.2E-01	--	5.0E-01	4.9E+00	6.6E+01	--	7.2E-04	7.2E-04	Soil to protect groundwater for Tribal seafood.
12672-29-6	Aroclor 1248	--	2.2E-01	--	5.0E-01	4.9E+00	6.6E+01	--	--	2.2E-01	EPA RSL Residential Including Ingestion, Dermal, and Inhalation.
11097-69-1	Aroclor 1254	--	2.2E-01	--	5.0E-01	4.9E+00	6.6E+01	--	2.9E-04	2.9E-04	Soil to protect groundwater for Tribal seafood.
37324-23-2	Aroclor 1260	--	2.2E-01	--	5.0E-01	4.9E+00	6.6E+01	--	5.4E-03	5.4E-03	Soil to protect groundwater for Tribal seafood.
1336-36-3	Total PCBs	--	2.2E-01	--	5.0E-01	4.9E+00	6.6E+01	1.3E-01	1.8E-03	1.8E-03	Soil to protect groundwater for Tribal seafood.
Total Petroleum Hydrocarbons (TPH)											
--	TPH - Gasoline (Benzene Present)	--	--	3.0E+01	--	--	--	--	--	3.0E+01	Surrogate Value: MTCA A Soil Cleanup Level.
--	TPH - Aged Gasoline and Mineral Spirits	--	--	1.0E+02	--	--	--	--	--	1.0E+02	Surrogate Value: MTCA A Soil Cleanup Level.
--	TPH - Diesel #2	--	--	2.0E+03	--	--	--	--	--	2.0E+03	Surrogate Value: MTCA A Soil Cleanup Level.
--	TPH - Heavy Oils	--	--	2.0E+03	--	--	--	--	--	2.0E+03	Surrogate Value: MTCA A Soil Cleanup Level.

Notes:

Washington state regulates carcinogenic polycyclic aromatic hydrocarbons using the benzo(a)pyrene Toxic Equivalent; therefore, no individual soil cleanup levels have been developed, and the cells are "grayed out." Refer to https://fortress.wa.gov/ecy/clarc/FocusSheets/tef.pdf.

1 Not all chemicals are constituents needing TMCLs at Boeing Plant 2.
2 Table 7, Puget Sound Soil Background Values from Ecology State-wide Natural Background for Metals in Soil, October 1994; except for Arsenic where MTCA established 20 mg/kg as background (WAC 173-340-900 Table 740-1, Footnote b).
3 EPA RSL calculations using EPA toxicity factors and exposure parameters as presented in associated tables in this attachment.
4 Surrogate value used for TPH based on protection of groundwater as drinking water. This value is presented in MTCA's Table 740-1 in conjunction with regulations present in MTCA 173-340-740 (2)(b)(i).
5 MTCA Method B uses WAC 173-340-740, equations 740-1 and 740-2; MTCA Method C uses WAC-173-340-745, equations 745-1 and 745-2 (Ecology 2007); specific parameters are presented in associated tables in this attachment; CLARC toxicity values updated (refer to Toxicity Factor Table).
6 EPA RSL calculations using EPA toxicity factors and exposure parameters as presented in associated tables in this attachment; excess individual lifetime cancer risk was adjusted to 1 in 100,000 and ingestion rate was increased to 200 mg/day by EPA Region 10 (R10) risk management decision.
7 Sediment Management Standards Sediment Quality Standards Chemical Criteria (WAC-173-204-320[a]); expressed as their equivalent dry weight values.
8 Soil to Groundwater cleanup values are based on the MTCA fixed parameter three-phase partitioning model (WAC 173-340-747, equation 747-1), using partitioning factors presented in associated tables in this attachment.
9 Lead risk levels were calculated using the biokinetic model rather than standard risk equations; the values included on this spreadsheet are MTCA Method A values for residential and industrial exposures using the biokinetic model.
10 Mercuric chloride was used as a surrogate.
11 Ecology has established the following "rule" for dealing with the mutagenic effects of vinyl chloride; refer to for details: https://fortress.wa.gov/ecy/clarc/FocusSheets/VinylChloride.pdf. EPA R10 has accepted this approach for this site.
12 The provisional toxicity factors for this chemical are semi-quantative and should be used for screening purposes only.
13 Because these cPAHs are considered mutagenic by EPA, EPA RSL calculations included an early life correction.

Abbreviations:

CAS Chemical abstract number
CLARC Cleanup Levels and Risk Calculation
Ecology Washington State Department of Ecology
EPA U.S. Environmental Protection Agency
MTCA Model Toxics Control Act
RSL Regional screening level
SMS Sediment Management Standards

Table 3
Ambient Air Summary

CAS Number	Chemical	Proposed Ambient Air TMCLs			
		Residential		Worker[1, 2]	
		TMCL ($\mu g/m^3$)	Source ($\mu g/m^3$)	TMCL ($\mu g/m^3$)	Source ($\mu g/m^3$)
67-64-1	Acetone	3.2E+04	EPA RSL	1.4E+05	Modified EPA RSL
71-43-2	Benzene	3.1E-01	EPA RSL	1.6E+01	Modified EPA RSL
78-93-3	2-Butanone (MEK)	5.2E+03	EPA RSL	2.2E+04	Modified EPA RSL
75-15-0	Carbon Disulfide	7.3E+02	EPA RSL	3.1E+03	Modified EPA RSL
56-23-5	Carbon Tetrachloride	4.1E-01	EPA RSL	2.0E+01	Modified EPA RSL
108-90-7	Chlorobenzene	5.2E+01	EPA RSL	2.2E+02	Modified EPA RSL
75-00-3	Chloroethane	1.0E+04	EPA RSL	4.4E+04	Modified EPA RSL
67-66-3	Chloroform	1.1E-01	EPA RSL	5.3E+00	Modified EPA RSL
74-87-3	Chloromethane	9.4E+01	EPA RSL	3.9E+02	Modified EPA RSL
106-43-4	4-Chlorotoluene	--	--	--	--
95-50-1	1,2-Dichlorobenzene	2.1E+02	EPA RSL	8.8E+02	Modified EPA RSL
106-46-7	1,4-Dichlorobenzene	2.2E-01	EPA RSL	1.1E+01	Modified EPA RSL
75-34-3	1,1-Dichloroethane	1.5E+00	EPA RSL	7.7E+01	Modified EPA RSL
107-06-2	1,2-Dichloroethane	9.4E-02	EPA RSL	4.7E+00	Modified EPA RSL
75-35-4	1,1-Dichloroethene	2.1E+02	EPA RSL	8.8E+02	Modified EPA RSL
156-59-2	*cis* -1,2-Dichloroethene[3]	--	--	--	--
156-60-5	*trans* -1,2-Dichloroethene[3]	--	--	--	--
78-87-5	1,2-Dichloropropane	2.4E-01	EPA RSL	1.2E+01	Modified EPA RSL
100-41-4	Ethylbenzene	9.7E-01	EPA RSL	4.9E+01	Modified EPA RSL
98-82-8	Isopropylbenzene(cumene)	4.2E+02	EPA RSL	1.8E+03	Modified EPA RSL
591-78-6	2-Hexanone	3.1E+01	EPA RSL	1.3E+02	Modified EPA RSL
75-09-2	Methylene Chloride	5.2E+00	EPA RSL	2.6E+02	Modified EPA RSL
108-10-1	Methyl Isobutyl Ketone	3.1E+03	EPA RSL	1.3E+04	Modified EPA RSL
91-20-3	Naphthalene	7.2E-02	EPA RSL	3.6E+00	Modified EPA RSL
100-42-5	Styrene	1.0E+03	EPA RSL	4.4E+03	Modified EPA RSL
79-34-5	1,1,2,2-Tetrachloroethane	4.2E-02	EPA RSL	2.1E+00	Modified EPA RSL
127-18-4	Tetrachloroethene (PCE)	4.1E-01	EPA RSL	2.1E+01	Modified EPA RSL
108-88-3	Toluene	5.2E+03	EPA RSL	2.2E+04	Modified EPA RSL
71-55-6	1,1,1-Trichloroethane	5.2E+03	EPA RSL	2.2E+04	Modified EPA RSL
79-00-5	1,1,2-Trichloroethane	1.5E-01	EPA RSL	7.7E+00	Modified EPA RSL
79-01-6	Trichloroethene (TCE)	1.2E-01	EPA RSL	6.1E+00	Modified EPA RSL
120-82-1	1,2,4-trichlorobenzene[3]	--	--	--	--
75-69-4	Trichlorofluoromethane	7.3E+02	EPA RSL	3.1E+03	Modified EPA RSL
76-13-1	1,1,2-Trichlorotrifluoroethane	3.1E+02	EPA RSL	1.3E+03	Modified EPA RSL
75-01-4	Vinyl chloride[4]	2.8E-01	EPA RSL	1.4E+01	Modified EPA RSL
108-38-3	m-Xylene	7.3E+02	EPA RSL	3.1E+03	Modified EPA RSL
95-47-6	o-Xylene	7.3E+02	EPA RSL	3.1E+03	Modified EPA RSL
106-42-3	p-Xylene	7.3E+02	EPA RSL	3.1E+03	Modified EPA RSL
10330-20-7	Xylenes (total)	1.0E+02	EPA RSL	4.4E+02	Modified EPA RSL

Notes:

1 EPA Region (R10) has made a risk management decision to use a 1 in 100,000 excess individual lifetime cancer risk for workers at Boeing Plant 2. Calculations are based on the EPA RSL equations modified for a total risk of 1.0E-5.

2 Ecology's worker exposure have been modified from full time (365 days/year x 24 hours/day) to the work week allowed under industrial soils (10 hours/day x 7 days/week x 50 weeks/year).

3 No inhalation toxicity factors are available.

4 Ecology has established the following "rule" for dealing with the mutagenic effects of vinyl chloride; refer to for details: https://fortress.wa.gov/ecy/clarc/FocusSheets/VinylChloride.pdf. EPA R10 has accepted this approach for this site.

Abbreviations:

CAS Chemical abstract number
Ecology Washington State Department of Ecology
EPA U.S. Environmental Protection Agency
RSL Regional screening level

Table 4
Identification of Sediment Constituents of Concern[1]

CAS Number	Chemical	Number of Results[1]	SMS SQS (dry weight equivalents)	Units	SMS SQS (organic carbon-normalized)	Units
Metals						
7440-38-2	Arsenic	98	5.7E+01	mg/kg dw	--	
7440-43-9	Cadmium	135	5.1E+00	mg/kg dw	--	
7440-47-3	Chromium	136	2.6E+02	mg/kg dw	--	
7440-50-8	Copper	136	3.9E+02	mg/kg dw	--	
7439-92-1	Lead	135	4.5E+02	mg/kg dw	--	
7439-97-6	Mercury	134	4.1E-01	mg/kg dw	--	
7440-22-4	Silver	135	6.1E+00	mg/kg dw	--	
7440-66-6	Zinc	135	4.1E+02	mg/kg dw	--	
Semivolatile Organic Compounds						
Polycyclic Aromatic Hydrocarbons						
	Total LPAH [2]	75	5.2E+03	µg/kg dw	3.7E+02	mg/kg OC
91-20-3	Naphthalene	75	2.1E+03	µg/kg dw	9.9E+01	mg/kg OC
208-96-8	Acenaphthylene	75	1.3E+03	µg/kg dw	6.6E+01	mg/kg OC
83-32-9	Acenaphthene	75	5.0E+02	µg/kg dw	1.6E+01	mg/kg OC
86-73-7	Fluorene	75	5.4E+02	µg/kg dw	2.3E+01	mg/kg OC
85-01-8	Phenanthrene	75	1.5E+03	µg/kg dw	1.0E+02	mg/kg OC
120-12-7	Anthracene	75	9.6E+02	µg/kg dw	2.2E+02	mg/kg OC
91-57-6	2-Methylnaphthalene	75	6.7E+02	µg/kg dw	3.8E+01	mg/kg OC
	Total HPAH [3]	75	1.2E+04	µg/kg dw	9.6E+02	mg/kg OC
206-44-0	Fluoranthene	75	1.7E+03	µg/kg dw	1.6E+02	mg/kg OC
129-00-0	Pyrene	75	2.6E+03	µg/kg dw	1.0E+03	mg/kg OC
56-55-3	Benzo(a)anthracene	75	1.3E+03	µg/kg dw	1.1E+02	mg/kg OC
218-01-9	Chrysene	75	1.4E+03	µg/kg dw	1.1E+02	mg/kg OC
	Total benzofluoranthenes [4]	75	3.2E+03	µg/kg dw	2.3E+02	mg/kg OC
205-99-2	*Benzo(b)fluoranthene* [5]	75	no criterion		no criterion	
207-08-9	*Benzo(k)fluoranthene* [5]	75	no criterion		no criterion	
50-32-8	Benzo(a)pyrene	75	1.6E+03	µg/kg dw	9.9E+01	mg/kg OC
193-39-5	Indeno(1,2,3-cd)pyrene	75	6.0E+02	µg/kg dw	3.4E+01	mg/kg OC
53-70-3	Dibenz(a,h)anthracene	75	2.3E+02	µg/kg dw	1.2E+01	mg/kg OC
191-24-2	Benzo(g,h,i)perylene	75	6.7E+02	µg/kg dw	3.1E+01	mg/kg OC
Chlorinated Benzenes						
95-50-1	1,2-Dichlorobenzene	75	3.5E+01	µg/kg dw	2.3E+00	mg/kg OC
106-46-7	1,4-Dichlorobenzene	75	1.1E+02	µg/kg dw	3.1E+00	mg/kg OC
120-82-1	1,2,4-Trichlorobenzene	75	3.1E+01	µg/kg dw	8.1E-01	mg/kg OC
118-74-1	Hexachlorobenzene	75	2.2E+01	µg/kg dw	3.8E-01	mg/kg OC
Phthalate Esters						
131-11-3	Dimethylphthalate	80	7.1E+01	µg/kg dw	5.3E+01	mg/kg OC
84-66-2	Diethylphthalate	80	2.0E+02	µg/kg dw	6.1E+01	mg/kg OC
84-74-2	Di-n-butylphthalate	80	1.4E+03	µg/kg dw	2.2E+02	mg/kg OC
85-68-7	Butylbenzylphthalate	80	6.3E+01	µg/kg dw	4.9E+00	mg/kg OC
117-81-7	bis(2-Ethylhexyl)phthalate	80	1.3E+03	µg/kg dw	4.7E+01	mg/kg OC
117-84-0	Di-n-octylphthalate	80	6.2E+03	µg/kg dw	5.8E+01	mg/kg OC
Miscellaneous						
132-64-9	Dibenzofuran	75	5.4E+02	µg/kg dw	1.5E+01	mg/kg OC
87-68-3	Hexachlorobutadiene	75	1.1E+01	µg/kg dw	3.9E+00	mg/kg OC
86-30-6	N-Nitrosodiphenylamine	75	2.8E+01	µg/kg dw	1.1E+01	mg/kg OC
Polychlorinated Biphenyls						
11141-16-5	Aroclor 1232	284	no criterion	µg/kg dw	no criterion	
53469-21-9	Aroclor 1016/1242 [6]	469	no criterion	µg/kg dw	no criterion	
12672-29-6	Aroclor 1248	469	no criterion	µg/kg dw	no criterion	
11097-69-1	Aroclor 1254	469	no criterion	µg/kg dw	no criterion	
11096-82-5	Aroclor 1260	469	no criterion	µg/kg dw	no criterion	
1336-36-3	Total PCBs (as Aroclors)	476	1.3E+02	µg/kg dw	1.2E+01	mg/kg OC
Ionizable Organic Compounds						
108-95-2	Phenol	75	4.2E+02	µg/kg dw	--	
95-48-7	2-Methylphenol	75	6.3E+01	µg/kg dw	--	
106-44-5	4-Methylphenol	71	6.7E+02	µg/kg dw	--	
105-67-9	2,4-Dimethylphenol	75	2.9E+01	µg/kg dw	--	
87-86-5	Pentachlorophenol	75	3.6E+02	µg/kg dw	--	
100-51-6	Benzyl alcohol	75	5.7E+01	µg/kg dw	--	
65-85-0	Benzoic acid	75	6.5E+02	µg/kg dw	--	

Notes:

Blank cells are intentional

This table from the Target Media Cleanup Levels Technical Memorandum, Revised Agency Review Draft, December 2008.

1 Data selection notes:
Only locations flagged in the database as being within the Duwamish Sediment Other Area (DSOA) Location group have been included.

Only samples designated as "field sample" or "field duplicate" have been included.
Only samples with an "approved" flag (in regards to dilutions and other QC measures) have been included.
Only samples with a media of "Sediment, #" have been included.
Cores and grabs of any depth have been included.

2 The total LPAH criterion represents the sum of the following low molecular weight polynuclear aromatic compounds: naphthalene, acenaphthylene, acenaphthene, fluorene, phenanthrene, and anthracene. 2-Methylnaphthalene is not included in the LPAH definition. The LPAH criterion is not the sum of criteria values for the individual LPAH compounds listed.

3 The total HPAH criterion represents the sum of the following high molecular weight polynuclear aromatic compounds: fluoranthene, pyrene, benz(a)anthracene, chrysene, total benzofluoranthenes, benzo(a)pyrene, indeno(1,2,3)pyrene, dibenz(a,h)anthracene, and benzo(g,h,i)perylene. The HPAH criterion is not the sum of criteria values for the individual HPAH compounds listed.

4 The total benzofluoranthenes criteria are compared to the sums of the concentrations of the b, j, and k isomers of benzofluoranthene.

5 There are no criteria for benzo(b)fluoranthene or benzo(k)fluoranthene.

6 For PCBs:
All Aroclor 1016, 1016/1242, and 1242 results have been summed together and reported under the heading "Aroclor 1016/1242" with the CAS for Aroclor 1242.

7 SMS regulates PCBs as "total PCB" only.

Abbreviations:

COC Constituent of concern
DW Dry weight
HPAH High molecular weight polycyclic aromatic hydrocarbon
LPAH Low molecular weight polycyclic aromatic hydrocarbon
ND Not detected
OC Organic carbon
PCB Polychlorinated biphenyl
SMS Sediment Management Standards
SQS Sediment Quality Standards

Boeing Plant 2
Seattle, WA

Target Media Cleanup Levels Technical Memorandum

Attachment A
Risk-based Calculations

FINAL

Table of Contents

Table A.1a Soil Standards, Criteria, and Risk-based Calculations
Table A.1b Groundwater Standards, Criteria, and Risk-based Calculations
Table A.1c Soil Calculations
Table A.1d Soil Equations and Parameters
Table A.1e Groundwater Calculations
Table A.1f Groundwater Equations and Parameters
Table A.1g Cross-Media Factors
Table A.1h Chemical-Specific Toxicity Factors for Inorganics
Table A.2a Ambient Air Risk-based Calculations
Table A.2b Soil Standards, Criteria, and Risk-based Calculations
Table A.2c Groundwater Standards, Criteria, and Risk-based Calculations
Table A.2d Ambient Air Calculations
Table A.2e Ambient Air Equations and Parameters
Table A.2f Soil Calculations
Table A.2g Soil Equations and Parameters
Table A.2h Groundwater Calculations
Table A.2i Groundwater Equations and Parameters
Table A.2j Cross-Media Factors
Table A.2k Toxicological Factors
Table A.3a Soil Standards, Criteria, and Risk-based Calculations
Table A.3b Groundwater Standards, Criteria, and Risk-based Calculations
Table A.3c Soil Calculations
Table A.3d Soil Equations and Parameters
Table A.3e Groundwater Calculations
Table A.3f Groundwater Equations and Parameters
Table A.3g Cross-Media Factors
Table A.3h Toxicological Factors
Table A.4a Soil Standards, Criteria, and Risk-based Calculations
Table A.4b Groundwater Standards, Criteria, and Risk-based Calculations
Table A.4c Soil Calculations
Table A.4d Soil Equations and Parameters
Table A.4e Groundwater Calculations
Table A.4f Groundwater Equations and Parameters

Table A.4g Cross-Media Factors

Table A.4h Toxicological Factors

Table A.1a
Soil Standards, Criteria, and Risk-based Calculations

CAS Number	Chemical[1]	Puget Sound Background[2] (mg/kg)	Residential: EPA — EPA RSL Residential Includes Ingestion, Dermal, and Inhalation[3]	Residential: Ecology — MTCA Method B Unrestricted Land Use Includes CLARC Toxicity Factors[4] (mg/kg)	Industrial: EPA — EPA RSL Industrial Includes Ingestion, Dermal, and Inhalation[5]	Industrial: Ecology — MTCA Method C Industrial Land Use Includes CLARC Toxicity Factors[4] (mg/kg)	Sediment Protection Ecology — SMS Sediment Quality Standards[6] (mg/kg dry weight)	Groundwater Protection Ecology — Soil Level to Protect Groundwater Using Three-phase Model[7] (mg/kg)	EPA Proposed Soil TMCL to Protect all Pathways (mg/kg)	EPA Proposed Soil TMCL to Protect all Pathways: Exposure Pathway Basis of TMCL
Metals										
7429-90-5	Aluminum	3.3E+04	7.7E+04	8.0E+04	5.0E+05	3.5E+06	--	--	7.7E+04	EPA RSL Residential Including Ingestion, Dermal, and Inhalation.
7440-36-0	Antimony (metallic)	--	3.1E+01	3.2E+01	2.0E+02	1.4E+03	--	7.8E+02	3.1E+01	EPA RSL Residential Including Ingestion, Dermal, and Inhalation.
7440-38-2	Arsenic (inorganic)	2.0E+01	3.9E-01	6.7E-01	8.7E+00	8.8E+01	5.7E+01	--	2.0E+01	Washington State Background.
7440-39-3	Barium	--	1.5E+04	1.6E+04	9.9E+04	7.0E+05	--	1.0E+02	1.0E+02	Soil to protect groundwater for Tribal seafood.
7440-41-7	Beryllium	6.1E-01	1.6E+02	1.6E+02	1.0E+03	7.0E+03	--	3.1E+02	1.6E+02	EPA RSL Residential Including Ingestion, Dermal, and Inhalation.
7440-43-9	Cadmium	7.7E-01	7.0E+01	8.0E+01	4.5E+02	3.5E+03	5.1E+00	4.0E+00	4.0E+00	Soil to protect groundwater for aquatic species.
18540-29-9	Chromium (VI)	--	1.2E+00	2.4E+02	2.8E+01	1.0E+04	--	--	1.2E+00	EPA RSL Residential Including Ingestion, Dermal, and Inhalation.
7440-48-4	Cobalt	--	2.3E+01	2.4E+01	1.5E+02	1.0E+03	--	1.2E+01	1.2E+01	Surrogate Value: soil to protect groundwater for drinking water use.
7440-50-8	Copper	3.6E+01	3.1E+03	3.2E+03	2.0E+04	1.4E+05	3.9E+02	8.0E+01	8.0E+01	Soil to protect groundwater background.
7439-89-6	Iron	5.9E+04	5.5E+04	5.6E+04	3.6E+05	2.4E+06	--	--	5.9E+04	Puget Sound Background.
7439-92-1	Lead[8]	2.4E+01	4.0E+02	2.5E+02	8.0E+02	1.0E+03	4.5E+02	7.9E+02	2.5E+02	MTCA A Residential.
7439-96-5	Manganese (non-diet)	1.2E+03	1.8E+03	1.9E+03	1.2E+04	8.4E+04	--	--	1.8E+03	EPA RSL Residential Including Ingestion, Dermal, and Inhalation.
7439-97-6	Mercury (elemental)	7.0E-02	5.6E+00	2.4E+01	2.8E+01	1.0E+03	4.1E-01	1.5E+00	1.5E+00	Soil to protect groundwater for aquatic species.
7487-94-7	Mercury (inorganic salts)[9]	--	2.3E+01	2.4E+01	1.5E+02	1.0E+03	--	--	2.3E+01	EPA RSL Residential Including Ingestion, Dermal, and Inhalation.
22967-92-6	Mercury (methyl mercury)	--	7.8E+00	8.0E+00	5.1E+01	3.5E+02	--	3.8E+00	3.8E+00	Soil to protect groundwater for Tribal seafood.
7439-98-7	Molybdenum	--	3.9E+02	4.0E+02	2.6E+03	1.7E+04	--	2.0E+01	2.0E+01	Surrogate Value: soil to protect groundwater for drinking water use.
7440-02-0	Nickel	4.8E+01	1.5E+03	1.6E+03	1.0E+04	7.0E+04	--	2.1E+02	2.1E+02	Soil to protect groundwater for aquatic species.
7782-49-2	Selenium	--	3.9E+02	4.0E+02	2.6E+03	1.7E+04	--	1.0E+00	1.0E+00	Soil to protect groundwater for aquatic species.
7440-22-4	Silver	--	3.9E+02	4.0E+02	2.6E+03	1.7E+04	6.1E+00	1.7E+02	1.7E+02	Soil to protect groundwater for Tribal seafood.
7440-31-5	Tin	--	4.7E+04	4.8E+04	3.1E+05	2.1E+06	--	1.5E+05	4.7E+04	EPA RSL Residential Including Ingestion, Dermal, and Inhalation.
1314-62-1	Vanadium (as vanadium pentoxide)	--	7.0E+02	7.2E+02	4.6E+03	3.1E+04	--	2.9E+03	7.0E+02	EPA RSL Residential Including Ingestion, Dermal, and Inhalation.
7440-66-6	Zinc (metallic)	8.5E+01	2.3E+04	2.4E+04	1.5E+05	1.0E+06	4.1E+02	1.4E+03	1.4E+03	Soil to protect groundwater for Tribal seafood.
Other Inorganics										
57-12-5	Cyanide (free)	--	1.6E+03	1.6E+03	1.0E+04	7.0E+04	--	2.0E+01	2.0E+01	Soil to protect groundwater for aquatic species.
74-90-8	Cyanide (hydrogen)	--	4.6E+00	4.8E+01	2.0E+01	2.1E+03	--	--	4.6E+00	EPA RSL Residential Including Ingestion, Dermal, and Inhalation.

Notes:

1 Not all chemicals are constituents needing TMCLs at Boeing Plant 2.
2 Table 7, Puget Sound Soil Background Values from Ecology State-wide Natural Background for Metals in Soil, October 1994; except for Arsenic where MTCA established 20 mg/kg as background (WAC 173-340-900 Table 740-1, Footnote b)
3 EPA RSL calculations using EPA toxicity factors and exposure parameters as presented in associated tables in this attachment.
4 MTCA Method B uses WAC 173-340-740, equations 740-1 and 740-2; MTCA Method C uses WAC-173-340-745, equations 745-1 and 745-2 (Ecology 2007); specific parameters are presented in associated tables in this attachment; CLARC toxicity values updated (refer to toxicity factor table).
5 EPA RSL calculations using EPA toxicity factors and exposure parameters as presented in associated tables in this attachment. EPA RSL Worker scenario has been modified to a 1 in 100,000 excess individual lifetime cancer risk and a soil ingestion rate of 200 mg/kg-day by an EPA Region 10 risk management decision.
6 Sediment Management Standards Sediment Quality Standards Chemical Criteria (WAC-173-204-320[a]); expressed as their equivalent dry weight values.
7 Soil to Groundwater cleanup values are based on the MTCA fixed parameter three-phase partitioning model (WAC 173-340-747, equation 747-1), using partitioning factors presented in associated tables in this attachment
8 Lead risk levels were calculated using the Integrated Exposure Uptake Biokinetic (IEUBK) model rather than standard risk equations; the MTCA values included on this spreadsheet are MTCA Method A values for residential and industrial exposures
9 Mercuric chloride was used as a surrogate.

Abbreviations:

CAS Chemical abstract number
CLARC Cleanup Levels and Risk Calculation
Ecology Washington State Department of Ecology
EPA U.S. Environmental Protection Agency
MTCA Model Toxics Control Act
RSL Regional screening levels
SMS Sediment Management Standards

Table A.1b
Groundwater Standards, Criteria, and Risk-based Calculations

CAS Number	Chemical[1]	Boeing Plant 2 Groundwater Background[2]	Protection of Drinking Water[3] – Drinking Water Standard/Criteria[4]				Protection of Aquatic Species – Freshwater Standards			Protection of Aquatic Species – Marine Standards			Protection of Human Health for Consumption of Fish and Shellfish in Marine Waters				EPA Proposed TMCL for Surface Water and Groundwater Discharging to Surface Water in the Lower Duwamish Waterway	
			Federal Primary Drinking Water Standards[5] (µg/L)	EPA RSL Tap Water Criteria[6] (µg/L)	State Primary Drinking Water Standards[7] (µg/L)	MTCA B Groundwater Cleanup Level[8] (µg/L)	Federal National Toxics Rule[9] Chronic (µg/L)	Federal Ambient Water Quality Criteria[10,11] Chronic (µg/L)	Washington Surface Water Quality Standards[11,12] Chronic (µg/L)	Federal National Toxics Rule[9] Chronic (µg/L)	Federal Ambient Water Quality Criteria[10] Chronic (µg/L)	Washington Surface Water Quality Standards[11, 12] Chronic (µg/L)	Federal National Toxics Rule[9] Organism (Fish/Shellfish) Only (µg/L)	Federal Ambient Water Quality Criteria[10] Organism (Fish/Shellfish) Only (µg/L)	Lowest of Tribal and Asian/Pacific Islander Exposure Scenarios[12, 13] Organism (Fish/Shellfish) Only (µg/L)	MTCA Method B Surface Water[12, 14] Fish/Shellfish (µg/L)	(µg/L)	Exposure Pathway Basis of TMCL
Metals																		
7429-90-5	Aluminum	--	--	3.7E+04	--	1.6E+04	--	8.7E+01	--	--	--	--	--	--	--	--	8.7E+01	Freshwater Chronic AWQC to protect aquatic species.
7440-36-0	Antimony (metallic)	--	6.0E+00	1.5E+01	6.0E+00	6.4E+00	--	--	--	--	--	--	4.3E+03	6.4E+02	1.5E+02	1.0E+03	1.5E+02	EPA R10 Tribal Consumption of Seafood.
7440-38-2	Arsenic (inorganic)	8.0E+00	1.0E+01	4.5E-02	1.0E+01	5.8E-02	1.9E+02	1.5E+02	1.9E+02	3.6E+01	3.6E+01	3.6E+01	1.4E+01	1.4E-01	5.4E-03	3.8E-02	8.0E+00	Lower Duwamish Waterway Groundwater Background.
7440-39-3	Barium	--	2.0E+03	7.3E+03	2.0E+03	3.2E+03	--	--	--	--	--	--	--	--	1.2E+02	8.2E+02	1.2E+02	EPA R10 Tribal Consumption of Seafood.
7440-41-7	Beryllium	--	4.0E+00	7.3E+01	4.0E+00	3.2E+01	--	--	--	--	--	--	--	--	1.2E+01	8.4E+01	1.2E+01	EPA R10 Tribal Consumption of Seafood.
7440-43-9	Cadmium[15]	--	5.0E+00	1.8E+01	5.0E+00	8.0E+00	1.9E+00	2.5E-01	1.9E+00	9.3E+00	8.8E+00	9.3E+00	--	--	4.3E-01	2.9E+00	2.5E-01	Freshwater Chronic AWQC to protect aquatic species.
18540-29-9	Chromium (VI)	--	--	4.3E-02	--	4.8E+01	1.0E+01	1.1E+01	1.0E+01	5.0E+01	5.0E+01	5.0E+01	--	--	5.8E-01	4.1E+00	5.8E-01	EPA R10 Tribal Consumption of Seafood.
7440-48-4	Cobalt	--	--	1.1E+01	--	4.8E+00	--	--	--	--	--	--	--	--	--	--	4.8E+00	Surrogate Value: MTCA B groundwater to protect drinking water.
7440-50-8	Copper[15]	8.0E+00	1.3E+03	1.5E+03	--	6.4E+02	2.3E+01	2.9E+00	2.3E+01	2.4E+00	3.1E+00	3.1E+00	--	--	4.3E+02	2.9E+03	8.0E+00	Lower Duwamish Waterway Groundwater Background.
7439-89-6	Iron	--	--	2.6E+04	3.0E-01	1.1E+04	--	1.0E+03	--	--	--	--	--	--	--	--	1.0E+03	Freshwater Chronic AWQC to protect aquatic species.
7439-92-1	Lead[15]	--	1.5E+01	--	--	--	6.1E+00	2.5E+00	6.1E+00	8.1E+00	8.1E+00	8.1E+00	--	--	--	--	2.5E+00	Freshwater Chronic AWQC to protect aquatic species.
7439-96-5	Manganese (non-diet)	2.0E+03	--	8.8E+02	5.0E+01	3.8E+02	--	--	--	--	--	--	--	1.0E+02	--	--	2.0E+03	Lower Duwamish Waterway Groundwater Background.
7439-97-6	Mercury (elemental)	--	2.0E+00	5.7E-01	2.0E+00	4.8E+00	1.2E-02	7.7E-01	1.2E-02	2.5E-02	9.4E-01	2.5E-02	1.5E-01	3.0E-01	--	--	1.2E-02	Freshwater Chronic NTR/WSWQS to protect aquatic species.
7487-94-7	Mercury (inorganic salts)[16]	--	--	--	--	4.8E+00	--	--	--	--	--	--	--	--	--	--	4.8E+00	Surrogate Value: MTCA B groundwater to protect drinking water.
22967-92-6	Mercury (methyl mercury)	--	--	3.7E+00	--	1.6E+00	--	7.7E-01	--	--	9.4E-01	--	--	3.0E-01	--	--	3.0E-01	EPA AWQC to protect human consumption of seafood.
7439-98-7	Molybdenum	--	--	1.8E+02	--	8.0E+01	--	--	--	--	--	--	--	--	--	--	8.0E+01	Surrogate Value: MTCA B groundwater to protect drinking water.
7440-02-0	Nickel[15]	--	--	7.3E+02	1.0E+02	3.2E+02	3.2E+02	5.2E+01	3.2E+02	8.2E+00	8.2E+00	8.2E+00	4.6E+03	4.6E+03	9.9E+01	6.6E+02	8.2E+00	Marine Chronic AWQC to protect aquatic species.
7782-49-2	Selenium	--	5.0E+01	1.8E+02	5.0E+01	8.0E+01	5.0E+00	5.0E+00	5.0E+00	7.1E+01	7.1E+01	7.1E+01	--	4.2E+03	1.5E+01	1.0E+02	5.0E+00	Freshwater Chronic NTR/WSWQS to protect aquatic species.
7440-22-4	Silver	--	--	1.8E+02	1.0E+02	8.0E+01	--	--	--	--	--	--	--	--	2.2E+01	1.5E+02	2.2E+01	EPA R10 Tribal Consumption of Seafood.
7440-31-5	Tin	--	--	2.2E+04	--	9.6E+03	--	--	--	--	--	--	--	--	--	--	9.6E+03	Surrogate Value: MTCA B groundwater to protect drinking water.
7440-62-2	Vanadium	--	--	1.8E+02	--	1.4E+02	--	--	--	--	--	--	--	--	--	--	1.4E+02	Surrogate Value: MTCA B groundwater to protect drinking water.
7440-66-6	Zinc (metallic)[15]	--	--	1.1E+04	5.0E+03	4.8E+03	2.1E+02	1.2E+02	2.1E+02	--	8.1E+01	8.1E+01	--	2.6E+04	5.6E+01	3.8E+02	5.6E+01	EPA R10 Tribal Consumption of Seafood.
Other Inorganics																		
57-12-5	Cyanide (free)	--	2.0E+02	7.3E+02	--	3.2E+02	5.2E+00	5.2E+00	5.2E+00	1.0E+00	1.0E+00	1.0E+00	2.2E+05	1.6E+04	2.4E+03	1.6E+04	1.0E+00	Marine Chronic AWQC to protect aquatic species.
74-90-8	Cyanide (hydrogen)	--	--	1.6E+00	2.0E+02	9.6E+00	--	--	--	--	--	--	--	--	--	--	1.6E+00	Surrogate Value: EPA RSL Tap Water Criteria.

Notes:

1 Not all chemicals are constituents needing TMCLs at Boeing Plant 2.
2 Background concentration in groundwater as per EPA approval of the Technical Memorandum on background, May 2008.
3 Drinking water standards/criteria are not applicable to Boeing Plant 2 unless no other applicable standard exists for a constituent needing a TMCL in groundwater.
4 The standards are potentially applicable to groundwater that may be used for drinking water supplies. Ecology determines the maximum beneficial use of groundwater, which may or may not include drinking.
5 National Primary Drinking Water Regulations, Maximum Contaminant Levels (MCLs); http://water.epa.gov/drink/contaminants/index.cfm.
6 EPA RSL, Residential Tapwaters; http://www.epa.gov/region9/superfund/prg/.
7 Washington Primary Drinking Water Standards WAC 246-290-130, Maximum Contaminant Levels (MCLs).
8 Standard MTCA Method B uses WAC 173-340-740; equations 730-1 and 730-2 (Ecology 2007). Parameters and toxicity factors can be found in associated tables in this attachment.
9 National Toxics Rule (NTR), 40 CFR 131.36.
10 EPA Ambient Water Quality Criteria (AWQCs), Clean Water Action Section 304.
11 Washington Surface Water Quality Standards; WAC 173-201A, Surface Water Quality Criteria.
12 EPA and Ecology fish consumption scenarios are based on MTCA Method B Surface Water Equations (equations 730-1 and 730-2); however, they use different exposure assumptions. Details are given in associated tables in this attachment.
13 This column uses the approach described in Note 8, but selects the lower concentrations that are protective of special populations including Tribal and Asian/Pacific Islander; the lowest concentration is always associated with Tribal exposure.
14 This column is included for comparison only and is based on the default exposure scenario in MTCA 173-340-730.
15 For these chemicals, freshwater standards for protection of aquatic species are water hardness dependent. The standards have been adjusted from the default values in the guidance to a site-specific average value at Boeing Plant 2 of 229 mg/L (obtained from AMEC Geomatrix, Water Quality Technical Memorandum, 2011) using equations available in the NTR, AWQCs, and WAC 173-201A, respectively. Copper is treated differently in the AWQCs (http://water.epa.gov/scitech/swguidance/standards/criteria/aqlife/pollutants/copper/index.cfm). The copper criteria is calculated using a Biotic Ligand Model with the following parameters: temperature = 17.75°C, pH= 6.73,dissolved organic carbon (DOC) = 0.5 mg/L, humic acids (HA) = 10%, calcium = 62.5 mg/L, magnesium = 163 mg/L, sodium = 1,460 mg/L, potassium = 53.4 mg/L, sulfate = 363 mg/L, chloride = 2,510 mg/L, alkalinity = 55.2 mg/L, and sulfide = 0.0003 mg/L. Of the parameters, DOC, HA, and sulfide are model defaults, while the other parameters are site specific and obtained from: (1) AMEC Geomatrix, DSOA Additional Characterization Water Sample Collection, 2008 and (2) Floyd|Snider, Jorgenson Forge Outfall Site Source Control Action Completion Report, 2011.
16 Mercuric chloride used as a surrogate.

Abbreviations:

BCF Bioconcentration factor
CAS Chemical abstract number
DOC Dissolved organic carbon
CLARC Cleanup Levels and Risk Calculation
Ecology Washington State Department of Ecology
EPA U.S. Environmental Protection Agency
HA Humic acids
MTCA Model Toxics Control Act
NTR National Toxics Rule
R10 Region 10
RSL Regional screening level
WSWQS Washington Surface Water Quality Standards

Table A.1c
Soil Calculations

		Direct Contact Exposures																								Protection of Groundwater	
		Ecology Default Calculations				EPA RSL Calculations with Site-specific Factors								EPA RSL Calculations with Site-specific Factors								Proposed TMCLs				MTCA 3-Phase Model for Unsaturated Soils	
		Residential		Industrial		Residential Exposure								Worker Exposure								Direct Contact Exposure					
		MTCA Method B with CLARC Values		MTCA Method C with CLARC Values		Cancer Risk with EPA RSL Calculations, Parameters, and Toxicity Factors				Non-Cancer Risk with EPA RSL Calculations, Parameters, and Toxicity Factors				Cancer Risk with EPA RSL Calculations, Parameters, and Toxicity Factors; Modified to 10-5 Cancer Risk and Ingestion Rate of 200 mg/day				Non-Cancer Risk with EPA RSL Calculations, Parameters, and Toxicity Factors				Residential		Industrial		Groundwater Target to be Protected[1]	Three-phase Partitioning Between Soil, Soil Vapor, and Groundwater Using MTCA Equation[2,3]
CAS Number	Chemical	Cancer (mg/kg)	Non-Cancer (mg/kg)	Cancer (mg/kg)	Non-Cancer (mg/kg)	Ingestion (mg/kg)	Dermal (mg/kg)	Inhalation (mg/kg)	TOTAL (mg/kg)	Ingestion (mg/kg)	Dermal (mg/kg)	Inhalation (mg/kg)	TOTAL (mg/kg)	Ingestion (mg/kg)	Dermal (mg/kg)	Inhalation (mg/kg)	TOTAL (mg/kg)	Ingestion (mg/kg)	Dermal (mg/kg)	Inhalation (mg/kg)	TOTAL (mg/kg)	Cancer (mg/kg)	Non-Cancer (mg/kg)	Cancer (mg/kg)	Non-Cancer (mg/kg)	(mg/kg)	(mg/kg)
Metals																											
7429-90-5	Aluminum	--	7.98E+04	--	3.5E+06	--	--	--	--	7.8E+04	--	7.1E+06	7.7E+04	--	--	--	--	5.1E+05	--	3.0E+07	5.0E+05	--	7.7E+04	--	5.0E+05	8.7E+01	--
7440-36-0	Antimony (metallic)	--	3.19E+01	--	1.4E+03	--	--	--	--	3.1E+01	--	--	3.1E+01	--	--	--	--	2.0E+02	--	--	2.0E+02	--	3.1E+01	--	2.0E+02	1.5E+02	7.8E+02
7440-38-2	Arsenic (inorganic)	6.7E-01	2.39E+01	8.8E+01	1.0E+03	4.3E-01	4.5E+00	7.7E+02	3.9E-01	2.3E+01	2.8E+02	2.1E+04	2.2E+01	9.5E+00	9.6E+01	3.9E+04	8.7E+00	1.5E+02	1.5E+03	8.9E+04	1.4E+02	3.9E-01	2.2E+01	8.7E+00	1.4E+02	8.0E+00	--
7440-39-3	Barium	--	1.60E+04	--	7.0E+05	--	--	--	--	1.6E+04	--	7.1E+05	1.5E+04	--	--	--	--	1.0E+05	--	3.0E+06	9.9E+04	--	1.5E+04	--	9.9E+04	1.2E+02	1.0E+02
7440-41-7	Beryllium	--	1.60E+02	--	7.0E+03	--	--	1.4E+03	1.4E+03	1.6E+02	--	2.8E+04	1.6E+02	--	--	6.9E+04	6.9E+04	1.0E+03	--	1.2E+05	1.0E+03	1.4E+03	1.6E+02	6.9E+04	1.0E+03	1.2E+01	3.1E+02
7440-43-9	Cadmium	--	7.98E+01	--	3.5E+03	--	--	1.8E+03	1.8E+03	7.8E+01	7.0E+02	1.4E+04	7.0E+01	--	--	9.3E+04	9.3E+04	5.1E+02	3.9E+03	6.0E+04	4.5E+02	1.8E+03	7.0E+01	9.3E+04	4.5E+02	2.5E-01	4.0E+00
18540-29-9	Chromium(VI)	--	2.39E+02	--	1.0E+04	1.3E+00	--	3.9E+01	1.2E+00	2.3E+02	--	1.4E+05	2.3E+02	2.9E+01	--	2.0E+03	2.8E+01	1.5E+03	--	6.0E+05	1.5E+03	1.2E+00	2.3E+02	2.8E+01	1.5E+03	5.8E-01	--
7440-48-4	Cobalt	--	2.39E+01	--	1.0E+03	--	--	3.7E+02	3.7E+02	2.3E+01	--	8.5E+03	2.3E+01	--	--	1.9E+04	1.9E+04	1.5E+02	--	3.6E+04	1.5E+02	3.7E+02	2.3E+01	1.9E+04	1.5E+02	4.8E+00	1.2E+01
7440-50-8	Copper	--	3.19E+03	--	1.4E+05	--	--	--	--	3.1E+03	--	--	3.1E+03	--	--	--	--	2.0E+04	--	--	2.0E+04	--	3.1E+03	--	2.0E+04	8.0E+00	8.0E+01
7439-89-6	Iron	--	5.58E+04	--	2.4E+06	--	--	--	--	5.5E+04	--	--	5.5E+04	--	--	--	--	3.6E+05	--	--	3.6E+05	--	5.5E+04	--	3.6E+05	1.0E+03	--
7439-92-1	Lead	--	2.50E+02	--	1.0E+03	--	--	--	--	--	--	--	--	--	--	--	--	--	--	--	--	--	2.5E+02	--	1.0E+03	2.5E+00	7.9E+02
7439-96-5	Manganese (non-diet)	--	1.91E+03	--	8.4E+04	--	--	--	--	1.9E+03	--	7.1E+04	1.8E+03	--	--	--	--	1.2E+04	--	3.0E+05	1.2E+04	--	1.8E+03	--	1.2E+04	2.0E+03	--
7439-97-6	Mercury (elemental)	--	2.39E+01	--	1.0E+03	--	--	--	--	1.3E+01	--	1.0E+01	5.6E+00	--	--	--	--	8.2E+01	--	4.2E+01	2.8E+01	--	5.6E+00	--	2.8E+01	1.2E-02	1.5E+00
7487-94-7	Mercury (inorganic salts)	--	2.39E+01	--	1.0E+03	--	--	--	--	2.3E+01	--	--	2.3E+01	--	--	--	--	1.5E+02	--	--	1.5E+02	--	2.3E+01	--	1.5E+02	4.8E+00	--
22967-92-6	Mercury (methyl mercury)	--	7.98E+00	--	3.5E+02	--	--	--	--	7.8E+00	--	--	7.8E+00	--	--	--	--	5.1E+01	--	--	5.1E+01	--	7.8E+00	--	5.1E+01	3.0E-01	3.8E+00
7439-98-7	Molybdenum	--	3.99E+02	--	1.7E+04	--	--	--	--	3.9E+02	--	--	3.9E+02	--	--	--	--	2.6E+03	--	--	2.6E+03	--	3.9E+02	--	2.6E+03	8.0E+01	2.0E+01
7440-02-0	Nickel	--	1.60E+03	--	7.0E+04	--	--	1.3E+04	1.3E+04	1.6E+03	--	1.3E+05	1.5E+03	--	--	6.4E+05	6.4E+05	1.0E+04	--	5.4E+05	1.0E+04	1.3E+04	1.5E+03	6.4E+05	1.0E+04	8.2E+00	2.1E+02
7782-49-2	Selenium	--	3.99E+02	--	1.7E+04	--	--	--	--	3.9E+02	--	2.8E+07	3.9E+02	--	--	--	--	2.6E+03	--	1.2E+08	2.6E+03	--	3.9E+02	--	2.6E+03	5.0E+00	1.0E+00
7440-22-4	Silver	--	3.99E+02	--	1.7E+04	--	--	--	--	3.9E+02	--	--	3.9E+02	--	--	--	--	2.6E+03	--	--	2.6E+03	--	3.9E+02	--	2.6E+03	2.2E+01	1.7E+02
7440-31-5	Tin	--	4.79E+04	--	2.1E+06	--	--	--	--	4.7E+04	--	--	4.7E+04	--	--	--	--	3.1E+05	--	--	3.1E+05	--	4.7E+04	--	3.1E+05	9.6E+03	1.5E+05
1314-62-1	Vanadium (as vanadium pentoxide)	--	7.18E+02	--	3.1E+04	--	--	--	--	7.0E+02	--	--	7.0E+02	--	--	--	--	4.6E+03	--	--	4.6E+03	--	7.0E+02	--	4.6E+03	1.4E+02	2.9E+03
7440-66-6	Zinc (metallic)	--	2.39E+04	--	1.0E+06	--	--	--	--	2.3E+04	--	--	2.3E+04	--	--	--	--	1.5E+05	--	--	1.5E+05	--	2.3E+04	--	1.5E+05	5.6E+01	1.4E+03
Other Inorganics																											
57-12-5	Cyanide (free)	--	1.60E+03	--	7.0E+04	--	--	--	--	1.6E+03	--	--	1.6E+03	--	--	--	--	1.0E+04	--	--	1.0E+04	--	1.6E+03	--	1.0E+04	1.0E+00	2.0E+01
74-90-8	Cyanide (hydrogen)	--	4.79E+01	--	2.1E+03	--	--	--	--	4.7E+01	--	5.1E+00	4.6E+00	--	--	--	--	3.1E+02	--	2.1E+01	2.0E+01	--	4.6E+00	--	2.0E+01	1.6E+00	--

Notes:

1 Refer to Table A.1b,Groundwater Standards, Criteria, and Risk-based Calculations, of this attachment.
2 WAC 173-340-747, equations 747-1 and 747-2.
3 When Henry's constant is not available for use in the 3-phase partitioning equation (i.e., when "--" is displayed in place of a value), a value of 0 is used as a surrogate (see Table A1.g for Henry's constants).

Abbreviations:

CAS Chemical abstract number
CLARC Cleanup Levels and Risk Calculation
Ecology Washington State Department of Ecology
EPA U.S. Environmental Protection Agency
MTCA Model Toxics Control Act
RSL Regional screening level

Table A.1d
Soil Equations and Parameters

Ecology — **Soil Cleanup Levels from Non-cancer Effects for Ingestion Only**

Equation 740-1 Non-cancer

Soil Cleanup Level (mg/kg) = EPA $SSL_{SOIL\text{-}NC\text{-}ING}$ =

$$\frac{(RfD_o \times ABW \times UCF \times HQ \times AT)}{(SIR \times AB1 \times EF \times ED)}$$

Terminology in MTCA:

RfD_o = Reference dose (mg/kg-day), as specified in WAC 173-340-708(7)
ABW = Average body weight (kg) over the exposure duration
UCF = 1,000,000 mg/kg
SIR = Soil ingestion rate (mg/kg)
AB1 = Gastrointestinal absorption fraction
HQ = Hazard quotient (unitless)
AT = Averaging time (years)
ED = Exposure duration (years)
EF = Exposure frequency (fraction of time)

Terminology in EPA RSL Equation:

=	BW	Body weight (kg)
=	same	
=	IRS	Ingestion rate soil (mg/day)
=	not used	
=	THQ	Target hazard quotient (unitless)
=	AT	Averaging time (days)
=	ED	Exposure duration (years)
=	EF	Exposure frequency (days/year)

Exposure Scenarios	RfD_o (mg/kg-day)	ABW (kg)	HQ (unitless)	AT (years)	SIR (mg/day)	AB1 (unitless)	EF (unitless)	ED (years)	Assumptions for Unitless EF Term: Total Days (days)	hours/day (unitless)	days/week (unitless)	weeks/year (unitless)
MTCA Method B Residential Child	<table>	16	1	6	200	1	1.00	6	365	24	7	52
MTCA Method C Worker	<table>	70	1	20	50	1	0.40	20	350	10	7	50
EPA RSL Residental Child	<table>	15	1	6	200	1	0.96	6	350			
EPA RSL Residental Adult	<table>	70	1	25	100	1	0.96	25	350			
Modified EPA RSL Worker[1,2]	<table>	70	1	25	200	1	0.68	25	250			

EPA RSL — **Soil Screening Levels from Non-cancer Effects**

Soil Screening Level (mg/kg) =

$$\frac{1}{\frac{1}{SSL_{SOIL\text{-}NC\text{-}ING}} + \frac{1}{SSL_{SOIL\text{-}NC\text{-}DER}} + \frac{1}{SSL_{SOIL\text{-}NC\text{-}INH}}}$$

< ---------- Ingestion of Soil Term ----------> < ------ Dermal Contact with Soil Term -------> < ---------- Inhalation of Dust ---------->

$SSL_{SOIL\text{-}NC\text{-}ING}$ = **Use the MTCA equation above for ingestion.**

$$SSL_{SOIL\text{-}NC\text{-}DER} = \frac{THQ \times BW \times AT \times RfD_d \times UCF1}{EF \times ED \times SA \times AF \times ABS_d} = \frac{RfD_d}{ABS_d} \times \frac{THQ \times BW \times AT \times UCF1}{EF \times ED \times SA \times AF}$$

$$SSL_{SOIL\text{-}NC\text{-}INH} = \frac{THQ \times AT}{(1/RfC_i) \times EF \times ED \times ET \times UCF2 \times [(1/PEF) + (1/VF)]} = \frac{RfC_i}{[1/VF + 1/PEF]} \times \frac{THQ \times AT}{EF \times ED \times ET \times UCF2}$$

THQ = Target hazard quotient (or HQ for hazard quotient), unitless
BW = Body weight (kg)
AT = Averaging time (total number of days in the averaging time: 6 years for children; 25 years for workers)
RfD_d = Dermal reference dose (mg/kg-day) = RfD_o * GI-abs
GI-abs = GI absorption factor correction
UCF1 = 1,000,000 mg/kg
EF = Exposure frequency (days/year)
ED = Exposure duration (years)
ET = Exposure time (hours/day)
SA = Surface area exposed (cm^2/day)
AF = Adherence factor (mg/cm^2)
ABS_d = Skin absorption factor (unitless)
RfC_i = Reference concentration, inhalation (mg/m^3; chemical specific)
PEF = Particulate emission factor used for dusts (m^3/kg; 1.4 E+9 from EPA RSL User Manual)
VF = Volatilization factor used for volatile organic compounds (m^3/kg; chemical specific)
UCF2 = 1/24 day/hour

Source: http://www.epa.gov/reg3hwmd/risk/human/rb-concentration_table/usersguide.htm

Exposure Scenarios	THQ (unitless)	BW (kg)	AT (days)	RfD_d (mg/kg-day)	ED (years)	EF (days/year)	ET (hours/day)	IRS (mg/day)	SA (cm^2/day)	AF (mg/cm^2)	ABS_d (unitless)	RfC_i (mg/m^3)	VF (m^3/kg)	PEF (m^3/kg)	1/VF + 1/PEF (m^3/kg)
EPA RSL Residential (Child)	1	15	2,190	<table>	6	350	24	200	2,800	0.2	<table>	<table>	<table>	1.36E+09	<table>
Modified EPA RSL Worker[1,2]	1	70	9,125	<table>	25	250	8	200	3,300	0.2	<table>	<table>	<table>	1.36E+09	<table>

Ecology — **Soil Cleanup Levels from Cancer Risk for Ingestion Only**

Equation 740-2 Cancer

Soil cleanup level (mg/kg) =

$$\frac{(RISK \times ABW \times AT \times UCF)}{(CPF_o \times SIR \times AB1 \times ED \times EF)}$$

RISK = Acceptable excess individual lifetime cancer risk (unitless)
ABW = Average body weight (kg) over the exposure duration
AT = Averaging time (years)
UCF = 1,000,000 mg/kg
CPF_o = Carcinogenic potency factor (kg-day/mg)
SIR = Soil ingestion rate (mg/day)
AB1 = Gastrointestinal absorbtion fraction (unitless)
ED = Exposure duration (years)
EF = Exposure frequency (unitless)

Exposure Scenarios	RISK (unitless)	ABW (kg)	AT (years)	CPF_o (kg-day/mg)	SIR (mg/day)	AB1 (unitless)	ED (years)	EF (unitless)	Assumptions for EF Term: hours/day (unitless)	days/week (unitless)	weeks/year (unitless)
DEFAULT MTCA Method B	1.00E-06	16	75	<table>	200	1	6	1.00	24	7	52
DEFAULT MTCA Method C	1.00E-05	70	75	<table>	50	1	20	0.40	24	7	52

Table A.1d
Soil Equations and Parameters

EPA RSL — **Soil Screening Levels from Cancer Risk for Residents (childhood corrected) and Workers**

< ---------- Ingestion of Soil Term ----------> < ----- Dermal Contact with Soil Term -------> < --------- Inhalation of Dust ---------->

$$\text{Soil Screening Level (mg/kg)} = \frac{1}{\frac{1}{SSL_{SOIL\text{-}CA\text{-}ING}} + \frac{1}{SSL_{SOIL\text{-}CA\text{-}DER}} + \frac{1}{SSL_{SOIL\text{-}CA\text{-}INH}}}$$

$$SSL_{SOIL\text{-}CA\text{-}ING} = \frac{TR \times AT}{CSF_o \times EF \times IFS \times UCF1} \quad \text{where} \quad IFS = \frac{ED_c \times IRS_c}{BW_c} + \frac{ED_a \times IRS_a}{BW_a}$$

$$SSL_{SOIL\text{-}CA\text{-}DER} = \frac{TR \times AT}{CSF_d \times EF \times DFS \times ABS_d \times UCF1} \quad \text{where} \quad DFS = \frac{ED_c \times SA_c \times AF_c}{BW_c} + \frac{ED_a \times SA_a \times AF_a}{BW_a} \quad \text{and where} \quad CSF_d = CSF_o * \text{GI-Abs}$$

$$SSL_{SOIL\text{-}NC\text{-}INH} = \frac{TR \times AT}{IUR \times UCF2 \times EF \times ED \times ET \times UCF3 \times [(1/PEF) + (1/VF)]} = \frac{1}{IUR*[1/VF + 1/PEF]} \times \frac{TR \times AT}{UCF2 \times EF \times ED \times ET \times UCF3}$$

TR = Target excess individual lifetime cancer risk (unitless)
AT = Averaging time in days = 365 day/year * Lifetime (years)
CSF_o = Oral cancer slope factor (kg-day/mg)
EF = Exposure frequency (days/year)
IFS = Resident soil ingestion rate; age-adjusted (mg-year/kg-day)
UCF1 = 1.0E-6 kg/mg
ED_c = Exposure duration, child (years)
IRS_c = Resident soil ingestion rate, child; age-adjusted (mg-year/kg-day)
BW_c = Body weight, child (kg)
ED_a = Exposure duration, adult (years)
IRS_a = Resident soil ingestion rate, adult; age-adjusted (mg-year/kg-day)
BW_a = Body weight, adult (kg)
CSF_d = Cancer slope factor, dermal = CSF_o*GI-abs
GI-abs = GI absorption factor correction
DFS = Resident soil dermal contact factor; age-adjusted (mg-year/kg-day)
ABS_d = Skin absorption factor (unitless, chemical specific)
SA_c = Surface area, child (cm^2/day)
AF_c = Adherence factor, child (mg/cm^2)
SA_a = Surface area, adult (cm^2/day)
AF_a = Adherence factor, adult (mg/cm^2)
IUR = Inhalation unit rate (m^3/µg)
UCF2 = 1000 (µg/mg)
UCF3 = 1/24 (day/hour)
ED = Exposure duration (years)
ET = Exposure time (hours/day)
PEF = Particulate emission factor used for dusts (m^3/kg)
VF = Volatilization factor used for volatile organic compounds (m^3/kg)

Source: http://www.epa.gov/reg3hwmd/risk/human/rb-concentration_table/usersguide.htm

Exposure Scenarios	TR (unitless)	AT (days)	LT (years)	CSF_o (kg-day/mg)	EF (days/year)	ET (hours/day)	IFS (mg-year/kg-day)	IRS (mg-year/kg-day)	ED (years)	BW (kg)	DFS (mg-year/kg-day)	SA (cm^2/day)	AF (mg/cm^2)	ABS (unitless)	IUR (m^3/µg)	PEF (m^3/kg)	VF (m^3/kg)	1/VF + 1/PEF (m^3/kg)
EPA RSL Resident	1.00E-06	25,550	70	<table>	350	24	114		30		361			<table>	<table>	1.36E+09	<table>	<table>
contribution during childhood							80	200	6	15	224	2,800	0.2					
contribution during adult years							34	100	24	70	137	5,700	0.07					
Modified EPA RSL Worker[1,2]	1.00E-05	25,550	70	<table>	250	8	71	200	25	70	236	3,300	0.2	<table>	<table>	1.36E+09	<table>	<table>

Ecology — **Three-phase Partitioning Between Soil, Soil Vapor, and Groundwater Using MTCA Equation**

Equation 747-1

$$\text{Soil Concentration (mg/kg)} = C_s = C_w \times UCF \times DF \times \left(K_d + \frac{(\theta_w + \theta a H_{cc})}{\rho_b}\right) = C_W \times UCF \times DF \times K_d + \frac{C_W \times UCF \times DF \times \theta_w}{\rho_b} + \frac{C_W \times UCF \times DF \times \theta_a \times H_{cc}}{\rho_b} = C_W * (C1*K_d + C2 + C3*H_{cc})$$

where $C1 = UCF \times DF$

$C2 = \frac{UCF \times DF \times \theta_w}{\rho_b}$

$C3 = \frac{UCF \times DF \times \theta_a}{\rho_b}$

C_w = Ground water cleanup level established under WAC 173-340-720 (µg/L)
UCF = 1/1,000 (mg/µg)
DF = Dilution factor (dimensionless)
K_d = Distribution coefficient (L/kg)
θ_w = Water-filled soil porosity (ml water/ml soil)
θ_a = Air-filled soil porosity (ml air/ml soil)
H_{cc} = Henry's law constant (dimensionless)
ρ_b = Dry soil bulk density (kg/L)

Exposure Scenarios	C_w (µg/L)	DF (unitless)	K_d (L/kg)	θ_w (ml water/ ml soil)	θ_a (ml air/ ml soil)	H_{cc} (unitless)	ρ_b (kg/L)	C1 (mg/µg)	C2 (L-ml water/ ml soil)	C3 (L-ml air/ ml soil)
Soil Concentration for Saturated Soil	<table>	20	<table>	0.3	0.13	<table>	1.5	0.02	0.004	0.002

Notes:

Indicates no value is required in calculations for the associated exposure scenario indicated.
<table> Indicates a chemical-specific factor is available in the associated tables of this attachment.
1 EPA RSL Worker scenario has been modified to a 1 in 100,000 excess individual lifetime cancer risk and a soil ingestion rate of 200 mg/kg-day by an EPA Region 10 risk management decision.
2 Exposure frequency taken to be 250 days/year. This value was selected based on Region 9 EPA RSL tables last updated November 2010, which uses parameters associated with an indoor worker to calculate risk.

Abbreviations:

EPA U.S. Environmental Protection Agency
MTCA Model Toxics Control Act
RSL Regional screening level
SSL Soil Screening Level

Subscripts:

CA Cancer
DER Dermal
ING Ingestion
INH Inhalation
NC Non-cancer

Table A.1e
Groundwater Calculations

		Surface Water to Fish Consumption Pathway														Drinking Water Pathways			
						Ecology MTCA Calculations						Proposed Water to Fish Consumption TMCLs				EPA		Ecology	
		Tribal Consumption Child Includes EPA BCFs and Toxicity Factors[1]		Tribal Consumption Adult Includes EPA BCFs and Toxicity Factors[1]		Default (Recreational) Includes EPA BCFs and Toxicity Factors[2]		Asian/Pacific Islander Consumption Child Includes EPA BCFs and Toxicity Factors[3]		Asian/Pacific Islander Consumption Adult Includes EPA BCFs and Toxicity Factors[3]		MTCA Default Consumption Rate Modified to Use EPA Toxicity and Partitioning Coefficients		Tribal and/or Asian/Pacific Islander Modified to Use EPA Toxicity and Partitioning Coefficients		EPA RSL Tap Water[4]		MTCA Method B Groundwater to Protect Drinking Water Use[5]	
CAS Number	Chemical	Cancer (µg/L)	Non-cancer (µg/L)	Cancer (µg/L)	Non-cancer (µg/L)	Cancer (µg/L)	Non-cancer (µg/L)	Cancer (µg/L)	Non-cancer (µg/L)	Cancer (µg/L)	Non-cancer (µg/L)	TMCL (µg/L)	Source (µg/L)	TMCL (µg/L)	Source (µg/L)	Cancer (µg/L)	Non-cancer (µg/L)	Cancer (µg/L)	Non-cancer (µg/L)
Metals																			
7429-90-5	Aluminum	--	--	--	--	--	--	--	--	--	--	--	--	--	--	--	3.7E+04	--	1.6E+04
7440-36-0	Antimony (metallic)	--	1.5E+02	--	3.4E+02	--	1.0E+03	--	2.6E+02	--	4.4E+02	1.0E+03	MTCA B	1.5E+02	Tribal Child	--	1.5E+01	--	6.4E+00
7440-38-2	Arsenic (inorganic)	2.6E-02	1.0E+00	5.4E-03	2.2E+00	3.8E-02	6.8E+00	4.4E-02	1.7E+00	1.9E-02	2.9E+00	3.8E-02	MTCA B	5.4E-03	Tribal Adult	4.5E-02	1.1E+01	5.8E-02	4.8E+00
7440-39-3	Barium	--	1.2E+02	--	2.7E+02	--	8.2E+02	--	2.1E+02	--	3.5E+02	8.2E+02	MTCA B	1.2E+02	Tribal Child	--	7.3E+03	--	3.2E+03
7440-41-7	Beryllium	--	1.2E+01	--	2.7E+01	--	8.4E+01	--	2.1E+01	--	3.6E+01	8.4E+01	MTCA B	1.2E+01	Tribal Child	--	7.3E+01	--	3.2E+01
7440-43-9	Cadmium	--	4.3E-01	--	9.3E-01	--	2.9E+00	--	7.2E-01	--	1.2E+00	2.9E+00	MTCA B	4.3E-01	Tribal Child	--	1.8E+01	--	8.0E+00
18540-29-9	Chromium (VI)	2.8E+00	3.6E+02	5.8E-01	7.9E+02	4.1E+00	2.4E+03	4.8E+00	6.1E+02	2.0E+00	1.0E+03	4.1E+00	MTCA B	5.8E-01	Tribal Adult	4.3E-02	1.1E+02	--	4.8E+01
7440-48-4	Cobalt	--	--	--	--	--	--	--	--	--	--	--	--	--	--	--	1.1E+01	--	4.8E+00
7440-50-8	Copper	--	4.3E+02	--	9.4E+02	--	2.9E+03	--	7.2E+02	--	1.2E+03	2.9E+03	MTCA B	4.3E+02	Tribal Child	--	1.5E+03	--	6.4E+02
7439-89-6	Iron	--	--	--	--	--	--	--	--	--	--	--	--	--	--	--	2.6E+04	--	1.1E+04
7439-92-1	Lead	--	--	--	--	--	--	--	--	--	--	--	--	--	--	--	--	--	--
7439-96-5	Manganese (non-diet)	--	--	--	--	--	--	--	--	--	--	--	--	--	--	--	8.8E+02	--	3.8E+02
7439-97-6	Mercury (elemental)	--	--	--	--	--	--	--	--	--	--	--	--	--	--	--	5.7E-01	--	4.8E+00
7487-94-7	Mercury (inorganic salts)[6]	--	--	--	--	--	--	--	--	--	--	--	--	--	--	--	--	--	4.8E+00
22967-92-6	Mercury (methyl mercury)	--	--	--	--	--	--	--	--	--	--	--	--	--	--	--	3.7E+00	--	1.6E+00
7439-98-7	Molybdenum	--	--	--	--	--	--	--	--	--	--	--	--	--	--	--	1.8E+02	--	8.0E+01
7440-02-0	Nickel	--	9.9E+01	--	2.2E+02	--	6.6E+02	--	1.7E+02	--	2.8E+02	6.6E+02	MTCA B	9.9E+01	Tribal Child	--	7.3E+02	--	3.2E+02
7782-49-2	Selenium	--	1.5E+01	--	3.3E+01	--	1.0E+02	--	2.5E+01	--	4.3E+01	1.0E+02	MTCA B	1.5E+01	Tribal Child	--	1.8E+02	--	8.0E+01
7440-22-4	Silver	--	2.2E+01	--	4.8E+01	--	1.5E+02	--	3.7E+01	--	6.3E+01	1.5E+02	MTCA B	2.2E+01	Tribal Child	--	1.8E+02	--	8.0E+01
7440-31-5	Tin	--	--	--	--	--	--	--	--	--	--	--	--	--	--	--	2.2E+04	--	9.6E+03
7440-62-2	Vanadium	--	--	--	--	--	--	--	--	--	--	--	--	--	--	--	1.8E+02	--	1.4E+02
7440-66-6	Zinc (metallic)	--	5.6E+01	--	1.2E+02	--	3.8E+02	--	9.5E+01	--	1.6E+02	3.8E+02	MTCA B	5.6E+01	Tribal Child	--	1.1E+04	--	4.8E+03
Other Inorganics																			
57-12-5	Cyanide (free)	--	2.4E+03	--	5.3E+03	--	1.6E+04	--	4.1E+03	--	7.0E+03	1.6E+04	MTCA B	2.4E+03	Tribal Child	--	7.3E+02	--	3.2E+02
74-90-8	Cyanide (hydrogen)	--	--	--	--	--	--	--	--	--	--	--	--	--	--	--	1.6E+00	--	9.6E+00

Notes:

1 MTCA Method B Equations 730-1 and 730-2 modified to apply Tribal fish ingestion rates, body weights, and exposure duration (Ecology 2007). Refer to associated tables in this attachment for toxicity factors, bioconcentration factors, and exposure parameters.
2 MTCA Method B Equations 730-1 and 730-2 using default exposure assumptions. Refer to associated tables in this attachment for toxicity factors, bioconcentration factors, and exposure parameters.
3 MTCA Method B Equations 730-1 and 730-2 modified to apply Asian/Pacific Islander fish ingestion rates, body weights, and exposure duration (Ecology 2007). Refer to associated tables in this attachment for toxicity factors, bioconcentration factors, and exposure parameters.

4 EPA RSL, Residential Tapwaters; http://www.epa.gov/region9/superfund/prg/.
5 MTCA Method B Equations 720-1 and 720-2; groundwater cleanup levels to protect drinking water use.
6 Mercuric chloride used as a surrogate.

Abbreviations:

BCF Bioconcentration factor
CAS Chemical abstract number
Ecology Washington State Department of Ecology
EPA U.S. Environmental Protection Agency
MTCA Model Toxics Control Act
RSL Regional screening level

Table A.1f
Groundwater Equations and Parameters

Surface Water to Fish Consumption by Humans: Non-cancer Effects

$$\text{Surface Water Cleanup or Screening Level } (\mu g/L) = \frac{(RfD_o \times ABW \times UCF1 \times UCF2 \times HQ \times AT)}{(BCF \times FCR \times FDF \times ED)}$$

RfD_o = Oral reference dose (mg/kg-day)
ABW = Average body weight (kg)
UCF1 = 1,000 g/mg
UCF2 = 1,000 g/L
HQ = Hazard quotient (unitless)
AT = Averaging time (years)
BCF = Bioconcentration factor (L/kg)
FCR = Fish consumption rate (g/day)
FDF = Fish diet fraction (unitless)
ED = Exposure duration (years)

Exposure Scenarios	RfD_o (mg/kg-day)	ABW (kg)	HQ (unitless)	AT (years)	BCF (L/kg)	FCR (g/day)	FDF (unitless)	ED (years)
MTCA Default[1]	<table>	70	1	30	<table>	54	0.50	30
MTCA Asian/Pacific Islander Child[2,3]	<table>	15	1	6	<table>	23	1.00	6
MTCA Asian/Pacific Islander Adult[2,3]	<table>	63	1	24	<table>	57	1.00	24
EPA Tribal Child[3,4]	<table>	15	1	6	<table>	39	1.00	6
EPA Tribal Adult[3,4]	<table>	81.8	1	64	<table>	97	1.00	64

Surface Water to Fish Consumption by Humans: Cancer

$$\text{Surface Water Cleanup or Screening Level } (\mu g/L) = \frac{(RISK \times ABW \times UCF1 \times UCF2 \times AT)}{(CPF_o \times BCF \times FCR \times FDF \times ED)}$$

Risk = Acceptable excess individual lifetime cancer risk (unitless)
ABW = Average body weight (kg)
UCF1 = 1,000 µg/mg
UCF2 = 1,000 g/L
AT = Averaging time (years)
CPF_o = Cancer potency factor (kg-day/mg)
BCF = Bioconcentration factor (L/kg)
FCR = Fish consumption rate (g/day)
FDF = Fish diet fraction (unitless)
ED = Exposure duration (years)

Exposure Scenarios	Risk (unitless)	ABW (kg)	AT (years)	CPF_o (kg-day/mg)	BCF (L/kg)	FCR (g/day)	FDF (unitless)	ED (years)
MTCA Default[1]	1.00E-06	70	75	<table>	<table>	54	0.50	30
MTCA Asian/Pacific Islander Child[2,3]	1.00E-06	15	70	<table>	<table>	23	1.00	6
MTCA Asian/Pacific Islander Adult[2,3]	1.00E-06	63	70	<table>	<table>	57	1.00	24
EPA Tribal Child[3,4]	1.00E-06	15	70	<table>	<table>	39	1.00	6
EPA Tribal Adult[3,4]	1.00E-06	81.8	70	<table>	<table>	97	1.00	64

Groundwater (as Drinking Water) Cleanup Levels: Non-cancer Effects

$$\text{Groundwater Cleanup or Screening Level } (\mu g/L) = \frac{(RfD_o \times ABW \times UCF \times HQ \times AT)}{(DWIR \times INH \times DWF \times ED)}$$

RfD_o = Oral reference dose (mg/kg-day)
ABW = Average body weight (kg)
UCF = 1,000 µg/mg
HQ = Hazard quotient (unitless)
AT = Averaging time (years)
DWIR = Drinking water ingestion rate (L/day)
INH = Inhalation correction factor (unitless)
DWF = Drinking water fraction (unitless)
ED = Exposure duration (years)

Exposure Scenarios	RfD_o (mg/kg-day)	ABW (kg)	HQ (unitless)	AT (years)	DWIR (L/day)	INH (unitless)	DWF (unitless)	ED (years)
MTCA Default[1]	<table>	16	1	6	1	1	1.00	6

Groundwater (as Drinking Water) Cleanup Levels: Cancer

$$\text{Groundwater Cleanup or Screening Level } (\mu g/L) = \frac{(RISK \times ABW \times UCF \times AT)}{(CPF_o \times DWIR \times INH \times DWF \times ED)}$$

Risk = Acceptable excess individual lifetime cancer risk level (unitless)
ABW = Average body weight (kg)
UCF = 1,000 µg/mg
AT = Averaging time (years)
CPF_o = Cancer potency factor (kg-day/mg)
DWIR = Drinking water ingestion rate (L/day)
INH = Inhalation correction factor (unitless)
DWF = Drinking water fraction (unitless)
ED = Exposure duration (years)

Exposure Scenarios	Risk (unitless)	ABW (kg)	AT (years)	CPF_o (kg-day/mg)	DWIR (L/day)	INH (unitless)	DWF (unitless)	ED (years)
MTCA Default[1]	1.00E-06	70	75	<table>	2	1	1.00	30

Notes:

<table> Indicates a chemical-specific factor is available in the associated tables of this attachment.
1 All parameters derived from Model Toxics Control Act (MTCA) WAC 173-340-730, equations 730-1 and 730-2.
2 Fish consumption rates derived from Washington State Department of Ecology (Ecology) 2009: MTCA Regulation Update Summary, Fish Consumption Rates for High Exposure Populations.
3 Fish consumption rates include both finfish and shellfish, and exclude salmon.
4 All parameters derived from U.S Environmental Protection Agenecy (EPA) Region 10, 2007: Framework for Selecting and Using Tribal Fish and Shellfish Consumption Rates for Risk-based Decision Making.

Table A.1g
Cross-Media Factors

		Other Chemical Factors					Bioconcentration Factors							
		EPA R10					EPA R10		Ecology MTCA/CLARC		Others		Selected for Use	
CAS Number	Chemical	GI Absorption Conversion Factor (unitless)	Dermal Absorption Fraction (unitless)	Volatilization Factor (m^3/kg)	Source For Preceeding Factors	(1/VF + 1/PEF) (kg/m^3)	Water to Fish BCF[1] (L/kg)	Source	Water to Fish BCF[2] (L/kg)	Source	Water to Fish BCF (L/kg)	Source	Water to Fish BCF (L/kg)	Source
Metals														
7429-90-5	Aluminum	1.0E+00	--	--	EPA RSL 2010	7.4E-10	--	--	--	--	--	--	--	--
7440-36-0	Antimony (metallic)	1.5E-01	--	--	EPA RSL 2010	7.4E-10	1.0E+00	ATSDR 1992	1.0E+00	AWQC Gold Book	4.0E+01	HHRAP	1.0E+00	ATSDR 1992
7440-38-2	Arsenic (inorganic)[3]	1.0E+00	3.0E-02	--	EPA RSL 2010	7.4E-10	1.1E+02	HHRAP	4.4E+01	AWQC Gold Book	--	--	1.1E+02	HHRAP
7440-39-3	Barium	7.0E-02	--	--	EPA RSL 2010	7.4E-10	6.3E+02	HHRAP	--		--	--	6.3E+02	HHRAP
7440-41-7	Beryllium	7.0E-03	--	--	EPA RSL 2010	7.4E-10	6.2E+01	HHRAP	1.9E+01	AWQC Gold Book	--	--	6.2E+01	HHRAP
7440-43-9	Cadmium	2.5E-02	1.0E-03	--	EPA RSL 2010	7.4E-10	9.1E+02	HHRAP	6.4E+01	AWQC Gold Book	--	--	9.1E+02	HHRAP
18540-29-9	Chromium(VI)[3]	2.5E-03	--	--	EPA RSL 2010	7.4E-10	3.2E+00	HHRAP	1.6E+01	AWQC Gold Book	--	--	3.2E+00	HHRAP
7440-48-4	Cobalt	1.0E+00	--	--	EPA RSL 2010	7.4E-10	--	--	--	--	--	--	--	--
7440-50-8	Copper	1.0E+00	--	--	EPA RSL 2010	7.4E-10	3.6E+01	HHRAP	3.6E+01	AWQC Gold Book	--	--	3.6E+01	HHRAP
7439-89-6	Iron	1.0E+00	--	--	EPA RSL 2010	7.4E-10	--	--	--	--	--	--	--	--
7439-92-1	Lead	1.0E+00	--	--	EPA RSL 2010	7.4E-10	9.00E-02	HHRAP	--	--	--	--	9.00E-02	HHRAP
7439-96-5	Manganese (non-diet)[3]	4.0E-02	--	--	EPA RSL 2010	7.4E-10	--	--	--	--	--	--	--	--
7439-97-6	Mercury (elemental)[5]	1.0E+00	--	3.2E+04	EPA RSL 2010	3.1E-05	--	--	--	--	--	--	--	--
7487-94-7	Mercury (inorganic salts)	7.0E-02	--	--	EPA RSL 2010	7.4E-10	--	--	--	--	--	--	--	--
22967-92-6	Mercury (methyl mercury)	1.0E+00	--	--	EPA RSL 2010	7.4E-10	--	--	--	--	--	--	--	--
7439-98-7	Molybdenum	1.0E+00	--	--	EPA RSL 2010	7.4E-10	--	--	--	--	--	--	--	--
7440-02-0	Nickel	4.0E-02	--	--	EPA RSL 2010	7.4E-10	7.8E+01	HHRAP	4.7E+01	AWQC Gold Book	--	--	7.8E+01	HHRAP
7782-49-2	Selenium	1.0E+00	--	--	EPA RSL 2010	7.4E-10	1.3E+02	HHRAP	4.8E+00	AWQC Gold Book	--	--	1.3E+02	HHRAP
7440-22-4	Silver	4.0E-02	--	--	EPA RSL 2010	7.4E-10	8.8E+01	HHRAP	5.0E-01	AWQC Gold Book	--	--	8.8E+01	HHRAP
7440-31-5	Tin	1.0E+00	--	--	EPA RSL 2010	7.4E-10	--	--	--	--	--	--	--	--
7440-62-2	Vanadium	2.6E-02	--	--	EPA RSL 2010	7.4E-10	--	--	--	--	--	--	--	--
7440-66-6	Zinc (metallic)	1.0E+00	--	--	EPA RSL 2010	7.4E-10	2.1E+03	HHRAP	4.7E+01	AWQC Gold Book	--	--	2.1E+03	HHRAP
Other Inorganics														
57-12-5	Cyanide (free)	1.0E+00	--	5.0E+04	EPA RSL 2010	2.0E-05	3.2E+00	HHRAP	1.0E+00	AWQC Gold Book	--	--	3.2E+00	HHRAP
74-90-8	Cyanide (hydrogen)	1.0E+00	--	6.1E+03	EPA RSL 2010	1.6E-04	--	--	--	--	--	--	--	--

Table A.1g
Cross-Media Factors

		Soil to Water Partitioning								Air to Water Partitioning	
		EPA R10		Ecology MTCA/CLARC		Others		Selected for Use[4]		Selected for Use	
CAS Number	Chemical	Distribution Coefficient (K_d)[3] (L/kg)	Source	Distribution Coefficient (K_d)[3] (L/kg)	Source	Distribution Coefficient (K_d)[3] (L/kg)	Source	Distribution Coefficient (K_d)[3] (L/kg)	Source	Henry's Constant Law (H_{cc})[5] (unitless)	Source
Metals											
7429-90-5	Aluminum	--	--	--	--	--	--	--	--	--	EPA RSL 2010
7440-36-0	Antimony (metallic)	4.5E+01	EPA SSL 2002	4.5E+01	EPA SSL 2002	2.5E+02	EPA RD 2005	2.5E+02	EPA RD 2005	--	EPA RSL 2010
7440-38-2	Arsenic (inorganic)[3]	--	--	--	--	2.5E+03	EPA RD 2005	--	--	--	EPA RSL 2010
7440-39-3	Barium	4.1E+01	EPA SSL 2002	4.1E+01	EPA SSL 2002	--	--	4.1E+01	EPA SSL 2002	--	EPA RSL 2010
7440-41-7	Beryllium	7.9E+02	EPA SSL 2002	7.9E+02	EPA SSL 2002	1.3E+03	EPA RD 2005	1.3E+03	EPA RD 2005	--	EPA RSL 2010
7440-43-9	Cadmium	6.7E+00	WAC 173-340-900	6.7E+00	WAC 173-340-900	7.9E+02	EPA RD 2005	7.9E+02	EPA RD 2005	--	EPA RSL 2010
18540-29-9	Chromium(VI)[3]	--	--	--	--	1.3E+01	EPA RD 2005	--	--	--	EPA RSL 2010
7440-48-4	Cobalt	--	--	--	--	1.3E+02	EPA RD 2005	1.3E+02	EPA RD 2005	--	EPA RSL 2010
7440-50-8	Copper	2.2E+01	WAC 173-340-900	2.2E+01	EPA SSL 2002	5.0E+02	EPA RD 2005	5.0E+02	EPA RD 2005	--	EPA RSL 2010
7439-89-6	Iron	--	--	--	--	--	--	--	--	--	EPA RSL 2010
7439-92-1	Lead	1.0E+04	WAC 173-340-900	1.0E+04	WAC 173-340-900	1.6E+04	EPA RD 2005	1.6E+04	EPA RD 2005	--	EPA RSL 2010
7439-96-5	Manganese (non-diet)[3]	--	--	--	--	--	--	--	--	--	EPA RSL 2010
7439-97-6	Mercury (elemental)[5]	5.2E+01	WAC 173-340-900	5.2E+01	WAC 173-340-900	6.3E+03	EPA RD 2005	6.3E+03	EPA RD 2005	4.70E-01	EPA SSL 2002
7487-94-7	Mercury (inorganic salts)	--	--	--	--	--	--	--	--	--	EPA RSL 2010
22967-92-6	Mercury (methyl mercury)	--	--	--	--	6.3E+02	EPA RD 2005	6.3E+02	EPA RD 2005	--	EPA RSL 2010
7439-98-7	Molybdenum	--	--	--	--	1.3E+01	EPA RD 2005	1.3E+01	EPA RD 2005	--	EPA RSL 2010
7440-02-0	Nickel	6.5E+01	WAC 173-340-900	6.5E+01	WAC 173-340-900	1.3E+03	EPA RD 2005	1.3E+03	EPA RD 2005	--	EPA RSL 2010
7782-49-2	Selenium	5.0E+00	WAC 173-340-900	5.0E+00	WAC 173-340-900	1.0E+01	EPA RD 2005	1.0E+01	EPA RD 2005	--	EPA RSL 2010
7440-22-4	Silver	8.3E+00	EPA SSL 2002	8.3E+00	EPA SSL 2002	4.0E+02	EPA RD 2005	4.0E+02	EPA RD 2005	--	EPA RSL 2010
7440-31-5	Tin	--	--	--	--	7.9E+02	EPA RD 2005	7.9E+02	EPA RD 2005	--	EPA RSL 2010
7440-62-2	Vanadium	1.0E+03	EPA SSL 2002	1.0E+03	EPA SSL 2002	--	--	1.0E+03	EPA SSL 2002	--	EPA RSL 2010
7440-66-6	Zinc (metallic)	6.2E+01	WAC 173-340-900	6.2E+01	WAC 173-340-900	1.3E+03	EPA RD 2005	1.3E+03	EPA RD 2005	--	EPA RSL 2010
Other Inorganics											
57-12-5	Cyanide (free)	9.9E+00	EPA SSL 2002	--	EPA SSL 2002	1.0E+03	EPA RD 2005	1.0E+03	EPA RD 2005	--	EPA RSL 2010
74-90-8	Cyanide (hydrogen)	9.9E+00	EPA SSL 2002	--	EPA SSL 2002	--	--	--	--	--	EPA RSL 2010

Notes:

1 BCFs derived from Meylan, et al., 1999 (in EPA Human Health Risk Assessment Protocol for Hazardous Waste Combustion Facilities [HHRAP] Guidance, 2005, EPA520-R-05-006).

2 BCFs derived from CLARC database, originally sourced from EPA Quality Criteria for Water (AWQC Gold Book 1986), EPA 440/5-86-001.

3 Arsenic, chromium, manganese, and iron have K_d that are very dependent on the oxidation state of the metal, and they have oxidation states that vary under normal soil and groundwater conditions (refer to Stumm and Morgan, Aquatic Chemistry 1996). For this reason the following assumptions have been made:

For arsenic: no K_d has been selected for use because the varying redox conditions are present in groundwater at Plant 2 resulting in poor agreement between predicted and measured concentrations.

For chromium(VI): Cr(VI) is not stable under normal soil conditions and no K_d has been used for Cr(VI) partitioning between media; Cr(III) is stable and its K_d could be used, but it is not a constituents of concern due to its low toxicity.

For iron: no K_d has been selected for use because the varying redox conditions are present in groundwater at Plant 2 resulting in poor agreement between predicted and measured concentrations.

For manganese: no K_d has been selected for use because the varying redox conditions are present in groundwater at Plant 2 resulting in poor agreement between predicted and measured concentrations.

4 The distribution coefficients present in EPA RD 2005 were selected because this source contained the most comprehensive and critical review of partitioning coefficients among the sources available.

5 Of the metals, only elemental mercury is sufficiently volatile to have either a volatilization factor or a Henry's Law Constant, which are given below:

Volalitzation Factor (m^3/kg): EPA 3.20E+04, EPA SSL 2002; MTCA not used.

Henry's Law Constant (H_{cc}): EPA 4.70E-01, EPA SSL 2002; MTCA 4.70E-01, WAC 173-340.

For all other metals, Henry's Law Constant is taken to be equivalent to 0 in all equations which require use of Henry's Law Constant.

Abbreviations:

ATSDR Agency for Toxic Substances and Disease Registry
ATSDR 1992 ATSDR Toxicological Profile for Antimony and Compounds, September 2992; available online at http://www.atsdr.cdc.gov/ToxProfiles/tp23.pdf.
AWQC Ambient Water Quality Criteria
BCF Bioconcentration factor
CAS Chemical abstract number
CLARC Cleanup Levels and Risk Calculation
EPA U.S. Environmental Protection Agency
EPA RD 2005 Partition Coefficients for Metals in Surace Water, Soil, and Waste, Office of Research and Development, EPA/600/R-05/074, July 2005.
EPA RSL 2010 Regional Screening Levels, November 2010; https://www.epa.gov/region9/superfund/prg/.
EPA SSL 2002 Supplemental Guidance for Developing Soil Screening Levels for Superfund Sites, OSWER 9355.4-24, December 2002.
GI Gastrointestinal
MTCA Model Toxics Control Act
PEF Particulate emission factor
R10 Region 10

Table A.1h
Chemical-specific Toxicity Factors for Inorganics

		EPA R10[1]												Ecology[2]											
		Oral/Ingestion Toxicity Factors				Dermal Toxicity Factors[3]				Inhalation Toxicity Factors				Oral/Ingestion Toxicity Factors				Dermal Toxicity Factors[4]				Inhalation Toxicity Factors			
CAS Number	Chemical	Cancer Slope Factor (CSF_o) (kg-day/mg)	Source	Reference Dose (RfD_o) (mg/kg-day)	Source	Cancer Slope Factor (CSF_d) (kg-day/mg)	Source	Reference Dose (RfD_d) (mg/kg-day)	Source	Inhalation Unit Risk (IUR) ($\mu g/m^3$)	Source	Reference Concentration (RfC_i) (mg/m^3)	Source	Cancer Potency Factor (CPF_o) (kg-day/mg)	Source	Reference Dose (RfD_o) (mg/kg-day)	Source	Cancer Potency Factor (CPF_d) (kg-day/mg)	Source	Reference Dose (RfD_d) (mg/kg-day)	Source	Cancer Potency Factor (CPF_i) (kg-day/mg)	Source	Reference Dose (RfD_d) (mg/kg-day)	Source
Metals																									
7429-90-5	Aluminum	--	--	1.0E+00	PPRTV	--	--	1.0E+00	RfD_o*GI-abs	--	--	5.0E-03	PPRTV	--	--	1.0E+00	PPRTV	--	--	2.0E-01	RfD_o*GI-abs	--	--	--	--
7440-36-0	Antimony (metallic)	--	--	4.0E-04	IRIS	--	--	6.0E-05	RfD_o*GI-abs	--	--	--	--	--	--	4.0E-04	IRIS	--	--	8.0E-05	RfD_o*GI-abs	--	--	--	--
7440-38-2	Arsenic (inorganic)	1.5E+00	IRIS	3.0E-04	IRIS	1.5E+00	CSF_o/GI-abs	3.0E-04	RfD_o*GI-abs	4.3E-03	IRIS	1.5E-05	Cal/EPA	1.5E+00	IRIS	3.0E-04	IRIS	7.5E+00	CSF_o/GI-abs	6.0E-05	RfD_o*GI-abs	1.5E+01	IRIS	1.5E+01	HEAST
7440-39-3	Barium	--	--	2.0E-01	IRIS	--	--	1.4E-02	RfD_o*GI-abs	--	--	5.0E-04	HEAST	--	--	2.0E-01	IRIS	--	--	4.0E-02	RfD_o*GI-abs	--	--	2.0E-01	HEAST
7440-41-7	Beryllium	--	--	2.0E-03	IRIS	--	--	1.4E-05	RfD_o*GI-abs	2.4E-03	IRIS	2.0E-05	IRIS	--	--	2.0E-03	IRIS	--	--	4.0E-04	RfD_o*GI-abs	8.4E+00	IRIS	5.7E-06	IRIS
7440-43-9	Cadmium (in water)	--	--	1.0E-03	IRIS	--	--	2.5E-05	RfD_o*GI-abs	1.8E-03	IRIS	--	--	--	--	5.0E-04	IRIS	--	--	1.0E-04	RfD_o*GI-abs	6.3E+00	IRIS	--	--
7440-43-9a	Cadmium (in soil)	--	--	1.0E-03	IRIS	--	--	2.5E-05	RfD_o*GI-abs	1.8E-03	IRIS	1.0E-05	ATSDR	--	--	1.0E-03	IRIS	--	--	2.0E-04	RfD_o*GI-abs	6.3E+00	IRIS	--	--
7440-47-3	Chromium (total)	--	--	--	--	--	--	--	--	--	--	--	--	--	--	--	--	--	--	--	--	--	--	--	--
18540-29-9	Chromium(VI)	5.0E-01	NJDEP	3.0E-03	IRIS	2.0E+02	CSF_o/GI-abs	7.5E-06	RfD_o*GI-abs	8.4E-02	IRIS	1.0E-04	IRIS	--	--	3.0E-03	IRIS	--	--	6.0E-04	RfD_o*GI-abs	--	--	2.3E-06	IRIS
7440-48-4	Cobalt	--	--	3.0E-04	PPRTV	--	--	3.0E-04	RfD_o*GI-abs	9.0E-03	PPRTV	6.0E-06	PPRTV	--	--	3.0E-04	PPRTV	--	--	6.0E-05	RfD_o*GI-abs	--	--	--	--
7440-50-8	Copper	--	--	4.0E-02	HEAST	--	--	4.0E-02	RfD_o*GI-abs	--	--	--	--	--	--	4.0E-02	Unknown[5]	--	--	8.0E-03	RfD_o*GI-abs	--	--	--	--
7439-89-6	Iron	--	--	7.0E-01	PPRTV	--	--	7.0E-01	RfD_o*GI-abs	--	--	--	--	--	--	7.0E-01	PPRTV	--	--	1.4E-01	RfD_o*GI-abs	--	--	--	--
7439-92-1	Lead	--	--	--	--	--	--	--	--	--	--	--	--	--	--	--	--	--	--	--	--	--	--	--	--
7439-96-5	Manganese (non-diet)	--	--	2.4E-02	IRIS	--	--	9.6E-04	RfD_o*GI-abs	--	--	5.0E-05	IRIS	--	--	2.4E-02	IRIS	--	--	4.8E-03	RfD_o*GI-abs	--	--	1.4E-05	IRIS
7439-97-6	Mercury (elemental)	--	--	1.6E-04	Cal/EPA	--	--	1.6E-04	RfD_o*GI-abs	--	--	3.0E-04	IRIS	--	--	3.0E-04	HEAST	--	--	6.0E-05	RfD_o*GI-abs	--	--	8.6E-05	IRIS
7487-94-7	Mercury (inorganic salts)	--	--	3.0E-04	IRIS	--	--	2.1E-05	RfD_o*GI-abs	--	--	--	--	--	--	3.0E-04	IRIS	--	--	6.0E-05	RfD_o*GI-abs	--	--	--	--
22967-92-6	Mercury (methyl mercury)	--	--	1.0E-04	IRIS	--	--	1.0E-04	RfD_o*GI-abs	--	--	--	--	--	--	1.0E-04	IRIS	--	--	2.0E-05	RfD_o*GI-abs	--	--	--	--
7439-98-7	Molybdenum	--	--	5.0E-03	IRIS	--	--	5.0E-03	RfD_o*GI-abs	--	--	--	--	--	--	5.0E-03	IRIS	--	--	1.0E-03	RfD_o*GI-abs	--	--	--	--
7440-02-0	Nickel	--	--	2.0E-02	IRIS	--	--	8.0E-04	RfD_o*GI-abs	2.6E-04	Cal/EPA	9.0E-05	ATSDR	--	--	2.0E-02	IRIS	--	--	4.0E-03	RfD_o*GI-abs	--	--	--	--
7782-49-2	Selenium	--	--	5.0E-03	IRIS	--	--	5.0E-03	RfD_o*GI-abs	--	--	2.0E-02	Cal/EPA	--	--	5.0E-03	IRIS	--	--	1.0E-03	RfD_o*GI-abs	--	--	--	--
7440-22-4	Silver	--	--	5.0E-03	IRIS	--	--	2.0E-04	RfD_o*GI-abs	--	--	--	--	--	--	5.0E-03	IRIS	--	--	1.0E-03	RfD_o*GI-abs	--	--	--	--
7440-31-5	Tin	--	--	6.0E-01	HEAST	--	--	6.0E-01	RfD_o*GI-abs	--	--	--	--	--	--	6.0E-01	HEAST	--	--	1.2E-01	RfD_o*GI-abs	--	--	--	--
7440-62-2	Vanadium	--	--	9.0E-03	IRIS	--	--	2.3E-04	RfD_o*GI-abs	--	--	--	--	--	--	9.0E-03	IRIS	--	--	1.8E-03	RfD_o*GI-abs	--	--	--	--
7440-66-6	Zinc (metallic)	--	--	3.0E-01	IRIS	--	--	3.0E-01	RfD_o*GI-abs	--	--	--	--	--	--	3.0E-01	IRIS	--	--	6.0E-02	RfD_o*GI-abs	--	--	--	--
Other Inorganics																									
57-12-5	Cyanide (free)	--	--	2.0E-02	IRIS	--	--	2.0E-02	RfD_o*GI-abs	--	--	--	--	--	--	2.0E-02	IRIS	--	--	4.0E-03	RfD_o*GI-abs	--	--	--	--
74-90-8	Cyanide (hydrogen)	--	--	6.0E-04	IRIS	--	--	6.0E-04	RfD_o*GI-abs	--	--	8.0E-04	IRIS	--	--	6.0E-04	IRIS	--	--	1.2E-04	RfD_o*GI-abs	--	--	--	--

Notes:

1 Toxicity factors are from the November 2010 EPA RSL Tables unless otherwise noted.

2 Toxicity factors from Ecology were taken from CLARC on January 30, 2011; then updated to include all IRIS changes. PPRTV were also incorporated where it was clear what value would be used. Values from ATSDR, Cal/EPA, and NJEPA were not used.

3 EPA dermal toxicity factors are calculated based on the oral toxicity factors as follows: $CSF_d = CSF_o$/GI-abs; $RfD_d = RfD_o$ x GI-abs. GI-abs is the gastrointestinal absorption conversion factor, which is equal to 1.0 except where otherwise specified in EPA RSL 2010.

4 MTCA dermal toxicity factors are calculated based on the oral toxicity factors as follows: $CSF_d = CSF_o$/GI-abs; $RfD_d = RfD_d$ x GI-abs. GI-abs is the gastrointestinal absorption conversion factor, which is equal to 0.2 for inorganic compounds (see equations 740-4 and 740-5).

5 Reported in CLARC as "Unknown citation"; no value reported in IRIS.

Abbreviations:

ATSDR Agency for Toxic Substances and Disease Registry.
Cal/EPA California Environmental Protection Agency.
CSF and CPF The terms "cancer slope factor" and "cancer potency factor" are interchangeable.
Ecology Washington State Department of Ecology.
HEAST Health Effects Assessment Summary Tables.
IRIS Integrated Risk Information System.
MTCA Model Toxics Control Act.
NJDEP New Jersey Department of Environmental Protection.
PPRTV Provisional Peer Reviewed Toxicity Value.
R10 Region 10.
Rfd and RfC The terms "Reference factor Dose" and "Reference factor Concentration" are not interchangeable. The former is expressed as a dose (mg/kg-day) while the later is a concentrations (mg/unit volume of media).
VOC Volatile organic compound.

Table A.2a
Ambient Air Risk-based Calculations

CAS Number	Chemical	Proposed Ambient Air TMCLs			
		Residential		Worker[1, 2]	
		TMCL ($\mu g/m^3$)	Source ($\mu g/m^3$)	TMCL ($\mu g/m^3$)	Source ($\mu g/m^3$)
67-64-1	Acetone	3.2E+04	EPA RSL	1.4E+05	Modified EPA RSL
71-43-2	Benzene	3.1E-01	EPA RSL	1.6E+01	Modified EPA RSL
78-93-3	2-Butanone (MEK)	5.2E+03	EPA RSL	2.2E+04	Modified EPA RSL
75-15-0	Carbon Disulfide	7.3E+02	EPA RSL	3.1E+03	Modified EPA RSL
56-23-5	Carbon Tetrachloride	4.1E-01	EPA RSL	2.0E+01	Modified EPA RSL
108-90-7	Chlorobenzene	5.2E+01	EPA RSL	2.2E+02	Modified EPA RSL
75-00-3	Chloroethane	1.0E+04	EPA RSL	4.4E+04	Modified EPA RSL
67-66-3	Chloroform	1.1E-01	EPA RSL	5.3E+00	Modified EPA RSL
74-87-3	Chloromethane	9.4E+01	EPA RSL	3.9E+02	Modified EPA RSL
106-43-4	4-Chlorotoluene	--	--	--	--
95-50-1	1,2-Dichlorobenzene	2.1E+02	EPA RSL	8.8E+02	Modified EPA RSL
106-46-7	1,4-Dichlorobenzene	2.2E-01	EPA RSL	1.1E+01	Modified EPA RSL
75-34-3	1,1-Dichloroethane	1.5E+00	EPA RSL	7.7E+01	Modified EPA RSL
107-06-2	1,2-Dichloroethane	9.4E-02	EPA RSL	4.7E+00	Modified EPA RSL
75-35-4	1,1-Dichloroethene	2.1E+02	EPA RSL	8.8E+02	Modified EPA RSL
156-59-2	*cis* -1,2-Dichloroethene[3]	--	--	--	--
156-60-5	*trans* -1,2-Dichloroethene[3]	--	--	--	--
78-87-5	1,2-Dichloropropane	2.4E-01	EPA RSL	1.2E+01	Modified EPA RSL
100-41-4	Ethylbenzene	9.7E-01	EPA RSL	4.9E+01	Modified EPA RSL
98-82-8	Isopropylbenzene(cumene)	4.2E+02	EPA RSL	1.8E+03	Modified EPA RSL
591-78-6	2-Hexanone	3.1E+01	EPA RSL	1.3E+02	Modified EPA RSL
75-09-2	Methylene Chloride	5.2E+00	EPA RSL	2.6E+02	Modified EPA RSL
108-10-1	Methyl Isobutyl Ketone	3.1E+03	EPA RSL	1.3E+04	Modified EPA RSL
91-20-3	Naphthalene	7.2E-02	EPA RSL	3.6E+00	Modified EPA RSL
100-42-5	Styrene	1.0E+03	EPA RSL	4.4E+03	Modified EPA RSL
79-34-5	1,1,2,2-Tetrachloroethane	4.2E-02	EPA RSL	2.1E+00	Modified EPA RSL
127-18-4	Tetrachloroethene (PCE)	4.1E-01	EPA RSL	2.1E+01	Modified EPA RSL
108-88-3	Toluene	5.2E+03	EPA RSL	2.2E+04	Modified EPA RSL
71-55-6	1,1,1-Trichloroethane	5.2E+03	EPA RSL	2.2E+04	Modified EPA RSL
79-00-5	1,1,2-Trichloroethane	1.5E-01	EPA RSL	7.7E+00	Modified EPA RSL
79-01-6	Trichloroethene (TCE)	1.2E-01	EPA RSL	6.1E+00	Modified EPA RSL
120-82-1	1,2,4-trichlorobenzene[3]	--	--	--	--
75-69-4	Trichlorofluoromethane	7.3E+02	EPA RSL	3.1E+03	Modified EPA RSL
76-13-1	1,1,2-Trichlorotrifluoroethane	3.1E+02	EPA RSL	1.3E+03	Modified EPA RSL
75-01-4	Vinyl chloride[4]	2.8E-01	EPA RSL	1.4E+01	Modified EPA RSL
108-38-3	m-Xylene	7.3E+02	EPA RSL	3.1E+03	Modified EPA RSL
95-47-6	o-Xylene	7.3E+02	EPA RSL	3.1E+03	Modified EPA RSL
106-42-3	p-Xylene	7.3E+02	EPA RSL	3.1E+03	Modified EPA RSL
10330-20-7	Xylenes (total)	1.0E+02	EPA RSL	4.4E+02	Modified EPA RSL

Notes:

1 EPA Region 10 (R10) has made a risk management decision to use a 1 in 100,000 excess indiviual lifetime risk for cancer for workers at Boeing Plant 2. Calculations are based on the EPA RSL equations modified for a total risk of 1.0E-5.

2 Ecology worker exposure was modified from full time (365 days/year x 24 hours/day) to the work week allowed under industrial soil exposure (10 hours/day x 7 days/week x 50 weeks/year).

3 No inhalation toxicity factors are available.

4 Ecology has established the following "rule" for dealing with the mutagenic effects of vinyl chloride; refer to for details: https://fortress.wa.gov/ecy/clarc/FocusSheets/VinylChloride.pdf. EPA R10 has accepted this approach for this site.

Abbreviations:

CAS Chemical abstract number
Ecology Washington State Department of Ecology
EPA U.S. Environmental Protection Agency
RSL Regional screening level

Table A.2b
Soil Standards, Criteria, and Risk-based Calculations

		Residential		Industrial		Sediment Protection	Groundwater Protection	EPA Proposed Soil TMCL to Protect All Pathways	
		EPA	Ecology	EPA Modified	Ecology	Ecology	Ecology		
CAS Number	Chemical[1]	EPA RSL Residential Includes Ingestion, Dermal, and Inhalation[2] (mg/kg)	MTCA Method B Unrestricted Land Use Includes CLARC Toxicity Factors[3] (mg/kg)	EPA RSL Industrial Includes Ingestion, Dermal, and Inhalation[4] (mg/kg)	MTCA Method C Industrial Land Use Includes CLARC Toxicity Factors[3] (mg/kg)	SMS Sediment Quality Standards[5] (mg/kg dry weight)	Soil Level to Protect Groundwater Using Three-phase Model[6] (mg/kg)	(mg/kg)	Exposure Pathway Basis of TMCL
Volatile Organic Constituents									
67-64-1	Acetone	6.1E+04	7.2E+04	3.7E+05	3.1E+06	--	5.1E+02	5.1E+02	Soil to protect groundwater for Tribal seafood.
71-43-2	Benzene	1.1E+00	1.8E+01	4.9E+01	2.4E+03	--	9.3E-02	9.3E-02	Soil to protect groundwater for Tribal seafood.
78-93-3	2-Butanone (MEK)	2.8E+04	4.8E+04	1.5E+05	2.1E+06	--	4.3E+02	4.3E+02	Soil to protect groundwater for Tribal seafood.
75-15-0	Carbon Disulfide	8.2E+02	8.0E+03	3.6E+03	3.5E+05	--	7.5E+01	7.5E+01	Soil to protect groundwater for Tribal seafood.
56-23-5	Carbon Tetrachloride	6.1E-01	1.4E+01	2.8E+01	1.9E+03	--	2.1E-02	2.1E-02	Soil to protect groundwater for Tribal seafood.
108-90-7	Chlorobenzene	2.9E+02	1.6E+03	1.3E+03	7.0E+04	--	2.6E+01	2.6E+01	Soil to protect groundwater for Tribal seafood.
75-00-3	Chloroethane	1.4E+04	--	6.1E+04	--	--	2.8E+02	2.8E+02	Surrogate Value: soil to protect groundwater for drinking water use.
67-66-3	Chloroform	3.0E-01	8.0E+02	1.5E+01	3.5E+04	--	2.0E-01	2.0E-01	Soil to protect groundwater for Tribal seafood.
74-87-3	Chloromethane	1.2E+02	--	5.0E+02	--	--	1.6E+00	1.6E+00	Surrogate Value: soil to protect groundwater for drinking water use.
106-43-4	4-Chlorotoluene	--	--	--	--	--	4.0E+02	4.0E+02	Surrogate Value: soil to protect groundwater for drinking water use.
95-50-1	1,2-Dichlorobenzene	1.9E+03	7.2E+03	8.9E+03	3.1E+05	--	6.8E+01	6.8E+01	Soil to protect groundwater for Tribal seafood.
106-46-7	1,4-Dichlorobenzene	2.4E+00	--	1.2E+02	--	--	3.5E-01	3.5E-01	Soil to protect groundwater for Tribal seafood.
75-34-3	1,1-Dichloroethane	3.3E+00	1.6E+04	1.6E+02	7.0E+05	--	7.1E-01	7.1E-01	Soil to protect groundwater for Tribal seafood.
107-06-2	1,2-Dichloroethane	4.3E-01	1.1E+01	2.0E+01	1.4E+03	--	7.0E-02	7.0E-02	Soil to protect groundwater for Tribal seafood.
75-35-4	1,1-Dichloroethene	2.4E+02	4.0E+03	1.0E+03	1.7E+05	--	8.1E-02	8.1E-02	Soil to protect groundwater for Tribal seafood.
156-59-2	*cis* -1,2-Dichloroethene	1.6E+02	1.6E+02	1.0E+03	7.0E+03	--	2.6E+00	2.6E+00	Soil to protect groundwater for Tribal seafood.
156-60-5	*trans* -1,2-Dichloroethene	1.6E+03	1.6E+03	1.0E+04	7.0E+04	--	1.9E+01	1.9E+01	Soil to protect groundwater for Tribal seafood.
78-87-5	1,2-Dichloropropane	8.9E-01	--	4.2E+01	--	--	9.2E-02	9.2E-02	Soil to protect groundwater for Tribal seafood.
100-41-4	Ethylbenzene	5.4E+00	8.0E+03	2.4E+02	3.5E+05	--	2.3E-01	2.3E-01	Soil to protect groundwater for Tribal seafood.
98-82-8	Isopropylbenzene(cumene)	2.1E+03	8.0E+03	9.5E+03	3.5E+05	--	7.8E+01	7.8E+01	Soil to protect groundwater for Tribal seafood.
591-78-6	2-Hexanone	2.1E+02	4.0E+02	1.1E+03	1.7E+04	--	3.2E+01	3.2E+01	Soil to protect groundwater for Tribal seafood.
75-09-2	Methylene Chloride	1.1E+01	1.3E+02	4.7E+02	1.8E+04	--	6.5E-01	6.5E-01	Soil to protect groundwater for Tribal seafood.
108-10-1	Methyl Isobutyl Ketone	5.3E+03	6.4E+03	3.2E+04	2.8E+05	--	1.7E+02	1.7E+02	Soil to protect groundwater for Tribal seafood.
91-20-3	Naphthalene	3.6E+00	1.6E+03	1.8E+02	7.0E+04	2.1E+00	1.6E+01	3.6E+00	EPA RSL Residential Including Ingestion, Dermal, and Inhalation.
100-42-5	Styrene	6.3E+03	1.6E+04	3.1E+04	7.0E+05	--	2.1E+04	6.3E+03	EPA RSL Residential Including Ingestion, Dermal, and Inhalation.
79-34-5	1,1,2,2-Tetrachloroethane	5.6E-01	5.0E+00	2.3E+01	6.6E+02	--	1.3E-02	1.3E-02	Soil to protect groundwater for Tribal seafood.
127-18-4	Tetrachloroethene (PCE)	5.6E-01	8.0E+02	1.8E+01	3.5E+04	--	1.6E-03	1.6E-03	Soil to protect groundwater for Tribal seafood.
108-88-3	Toluene	5.0E+03	6.4E+03	2.9E+04	2.8E+05	--	1.0E+02	1.0E+02	Soil to protect groundwater for Tribal seafood.
71-55-6	1,1,1-Trichloroethane	8.7E+03	1.6E+05	3.7E+04	7.0E+06	--	1.9E+03	1.9E+03	Soil to protect groundwater for Tribal seafood.
79-00-5	1,1,2-Trichloroethane	1.1E+00	1.8E+01	4.8E+01	2.3E+03	--	7.3E-02	7.3E-02	Soil to protect groundwater for Tribal seafood.
79-01-6	Trichloroethene (TCE)	2.7E-01	1.1E+01	1.3E+01	1.0E+03	--	1.8E-02	1.8E-02	Soil to protect groundwater for Tribal seafood.
120-82-1	1,2,4-trichlorobenzene	2.2E+01	3.4E+01	4.9E+02	4.5E+03	--	8.0E-02	8.0E-02	Soil to protect groundwater for Tribal seafood.
75-69-4	Trichlorofluoromethane	7.8E+02	2.4E+04	3.3E+03	1.0E+06	--	2.0E+02	2.0E+02	Soil to protect groundwater for Tribal seafood.
76-13-1	1,1,2-Trichlorotrifluoroethane	4.3E+02	2.4E+06	1.8E+03	1.0E+08	--	7.1E+03	4.3E+02	EPA RSL Residential Including Ingestion, Dermal, and Inhalation.
75-01-4	Vinyl chloride[7]	8.1E-05	6.7E-01	4.1E-03	8.8E+01	--	3.4E-02	8.1E-05	EPA RSL Residential Including Ingestion, Dermal, and Inhalation.
108-38-3	m-Xylene	3.4E+03	1.6E+04	1.5E+04	7.0E+05	--	1.6E+02	1.6E+02	Soil to protect groundwater for Tribal seafood.
95-47-6	o-Xylene	3.8E+03	1.6E+04	1.8E+04	7.0E+05	--	2.0E+02	2.0E+02	Soil to protect groundwater for Tribal seafood.
106-42-3	p-Xylene	3.4E+03	1.6E+04	1.6E+04	7.0E+05	--	2.3E+02	2.3E+02	Soil to protect groundwater for Tribal seafood.
10330-20-7	Xylenes (total)	6.3E+02	1.6E+04	2.7E+03	7.0E+05	--	2.0E+02	2.0E+02	Soil to protect groundwater for Tribal seafood.

Notes:

1 Not all chemicals are constituents needing TMCLs at Boeing Plant 2.
2 EPA RSL calculations using EPA toxicity factors and exposure parameters as presented in associated tables in this attachment.
3 MTCA Method B uses WAC 173-340-740, equations 740-1 and 740-2; MTCA Method C uses WAC-173-340-745, equations 745-1 and 745-2 (Ecology 2007); specific parameters are presented in associated tables in this attachment; CLARC toxicity values updated (refer to Toxicity Factor Table).
4 EPA RSL Worker scenario has been modified to a 1 in 100,000 excess individual lifetime cancer risk and a soil ingestion rate of 200 mg/kg-day by an EPA Region 10 risk management decision.
5 Sediment Management Standards Sediment Quality Standards Chemical Criteria (WAC-173-204-320[a]); expressed as their equivalent dry weight values.
6 Soil to Groundwater cleanup values are based on the MTCA fixed parameter three-phase partitioning model (WAC 173-340-747, equation 747-1), using partitioning factors presented in associated tables in this attachment.
7 Ecology has established the following "rule" for dealing with the mutagenic effects of vinyl chloride; refer to for details: https://fortress.wa.gov/ecy/clarc/FocusSheets/VinylChloride.pdf. EPA R10 has accepted this approach for this site.

Abbreviations:

CAS Chemical abstract number
CLARC Cleanup Levels and Risk Calculation
Ecology Washington State Department of Ecology
EPA U.S. Environmental Protection Agency
MTCA Model Toxics Control Act
RSL Regional screening level
SMS Sediment Management Standards

Table A.2c
Groundwater Standards, Criteria, and Risk-based Calculations

		Protection of Drinking Water[2]				Protection of Aquatic Species						Protection of Human Health for Consumption of Fish and Shellfish in Marine Waters				EPA Proposed TMCL for Surface Water and Groundwater Discharging to Surface Water in the Lower Duwamish Waterway	
		Drinking Water Standard/Criteria[3]				Freshwater Standards			Marine Standards								
		Federal Primary Drinking Water Standards[4]	EPA RSL Tap Water Criteria[5]	State Primary Drinking Water Standards[6]	MTCA B Groundwater Cleanup Level[7]	Federal National Toxics Rule[8]	Federal Ambient Water Quality Criteria[9, 10]	Washington Surface Water Quality Standards[9, 11]	Federal National Toxics Rule[8]	Federal Ambient Water Quality Criteria[9]	Washington Surface Water Quality Standards[10, 11]	Federal National Toxics Rule[8]	Federal Ambient Water Quality Criteria[9]	Lowest of Tribal and Asian/Pacific Islander Exposure Scenarios[11, 12]	MTCA Method B Surface Water[11, 13]		
		EPA MCLs		Washington MCLs		Chronic	Chronic	Chronic	Chronic	Chronic	Chronic	Organism Only			Fish/Shellfish		
CAS Number	Chemical[1]	(µg/L)	(µg/L)	(µg/L)	(µg/L)	(µg/L)	(µg/L)	µg/L	µg/L	µg/L	µg/L	(µg/L)			(µg/L)	(µg/L)	Exposure Pathway Basis of TMCL
67-64-1	Acetone	--	2.2E+04	--	7.2E+03	--	--	--	--	--	--	--	--	1.1E+05	7.4E+05	1.1E+05	EPA R10 Tribal Consumption of Seafood.
71-43-2	Benzene	5.00E+00	4.1E-01	5.00E+00	8.0E-01	--	--	--	--	--	--	7.1E+01	5.1E+01	2.0E+00	1.4E+01	2.0E+00	EPA R10 Tribal Consumption of Seafood.
78-93-3	2-Butanone (MEK)	--	7.1E+03	--	4.8E+03	--	--	--	--	--	--	--	--	7.3E+04	4.9E+05	7.3E+04	EPA R10 Tribal Consumption of Seafood.
75-15-0	Carbon Disulfide	--	1.0E+03	--	8.0E+02	--	--	--	--	--	--	--	--	3.9E+03	2.6E+04	3.9E+03	EPA R10 Tribal Consumption of Seafood.
56-23-5	Carbon Tetrachloride	5.00E+00	4.4E-01	5.00E+00	6.3E-01	--	--	--	--	--	--	4.4E+00	1.6E+00	4.6E-01	3.2E+00	4.6E-01	EPA R10 Tribal Consumption of Seafood.
108-90-7	Chlorobenzene	1.00E+02	9.1E+01	1.00E+02	1.6E+02	--	--	--	--	--	--	2.1E+04	1.6E+03	2.7E+02	1.8E+03	2.7E+02	EPA R10 Tribal Consumption of Seafood.
75-00-3	Chloroethane	--	2.1E+04	--	--	--	--	--	--	--	--	--	--	--	--	2.1E+04	Surrogate Value: EPA RSL Tap Water Criteria.
67-66-3	Chloroform	8.00E+01	1.9E-01	8.00E+01	8.0E+01	--	--	--	--	--	--	4.7E+02	4.7E+02	9.4E+00	6.6E+01	9.4E+00	EPA R10 Tribal Consumption of Seafood.
74-87-3	Chloromethane	--	1.9E+02	--	--	--	--	--	--	--	--	--	--	--	--	1.9E+02	Surrogate Value: EPA RSL Tap Water Criteria.
106-43-4	4-Chlorotoluene	--	2.6E+03	--	--	--	--	--	--	--	--	--	--	--	--	2.6E+03	Surrogate Value: EPA RSL Tap Water Criteria.
95-50-1	1,2-Dichlorobenzene	6.00E+02	3.7E+02	6.00E+02	7.2E+02	--	--	--	--	--	--	1.7E+04	1.3E+03	4.4E+02	2.9E+03	4.4E+02	EPA R10 Tribal Consumption of Seafood.
106-46-7	1,4-Dichlorobenzene	7.50E+01	4.3E-01	7.50E+01	--	--	--	--	--	--	--	2.6E+03	1.9E+02	1.7E+00	1.2E+01	1.7E+00	EPA R10 Tribal Consumption of Seafood.
75-34-3	1,1-Dichloroethane	--	2.4E+00	--	1.6E+03	--	--	--	--	--	--	--	--	3.3E+01	2.3E+02	3.3E+01	EPA R10 Tribal Consumption of Seafood.
107-06-2	1,2-Dichloroethane	5.00E+00	1.5E-01	5.00E+00	4.8E-01	--	--	--	--	--	--	9.9E+01	3.7E+01	3.6E+00	2.5E+01	3.6E+00	EPA R10 Tribal Consumption of Seafood.
75-35-4	1,1-Dichloroethene	7.00E+00	3.4E+02	7.00E+00	4.0E+02	--	--	--	--	--	--	3.2E+00	7.1E+03	2.3E+03	1.6E+04	3.2E+00	NTR to protect human consumption of seafood.
156-59-2	*cis* -1,2-Dichloroethene	7.00E+01	7.3E+01	7.00E+01	1.6E+01	--	--	--	--	--	--	--	--	1.3E+02	9.0E+02	1.3E+02	EPA R10 Tribal Consumption of Seafood.
156-60-5	*trans* -1,2-Dichloroethene	1.00E+02	1.1E+02	1.00E+02	1.6E+02	--	--	--	--	--	--	--	1.0E+04	9.4E+02	6.3E+03	9.4E+02	EPA R10 Tribal Consumption of Seafood.
78-87-5	1,2-Dichloropropane	5.00E+00	3.9E-01	5.00E+00	--	--	--	--	--	--	--	--	1.5E+01	3.7E+00	2.6E+01	3.7E+00	EPA R10 Tribal Consumption of Seafood.
100-41-4	Ethylbenzene	7.00E+02	1.5E+00	7.00E+02	8.0E+02	--	--	--	--	--	--	2.9E+04	2.1E+03	1.7E+00	1.2E+01	1.7E+00	EPA R10 Tribal Consumption of Seafood.
98-82-8	Isopropylbenzene(cumene)	--	6.8E+02	--	8.0E+02	--	--	--	--	--	--	--	--	2.7E+02	1.8E+03	2.7E+02	EPA R10 Tribal Consumption of Seafood.
591-78-6	2-Hexanone	--	4.7E+01	--	4.0E+01	--	--	--	--	--	--	--	--	3.2E+03	2.2E+04	3.2E+03	EPA R10 Tribal Consumption of Seafood.
75-09-2	Methylene Chloride	5.00E+00	4.8E+00	5.00E+00	5.8E+00	--	--	--	--	--	--	1.6E+03	5.9E+02	6.1E+01	4.3E+02	6.1E+01	EPA R10 Tribal Consumption of Seafood.
108-10-1	Methyl Isobutyl Ketone	--	2.0E+03	--	6.4E+02	--	--	--	--	--	--	--	--	1.9E+04	1.2E+05	1.9E+04	EPA R10 Tribal Consumption of Seafood.
91-20-3	Naphthalene	--	1.4E-01	--	1.6E+02	--	--	--	--	--	--	--	--	2.6E+01	1.7E+02	2.6E+01	EPA R10 Tribal Consumption of Seafood.
100-42-5	Styrene	1.00E+02	1.6E+03	1.00E+02	1.6E+03	--	--	--	--	--	--	--	--	7.7E+04	5.2E+05	7.7E+04	EPA R10 Tribal Consumption of Seafood.
79-34-5	1,1,2,2-Tetrachloroethane	--	6.7E-02	--	2.2E-01	--	--	--	--	--	--	1.1E+01	4.0E+00	3.3E-01	2.3E+00	3.3E-01	EPA R10 Tribal Consumption of Seafood.
127-18-4	Tetrachloroethene (PCE)	5.00E+00	1.1E-01	5.00E+00	8.0E+01	--	--	--	--	--	--	8.9E+00	3.3E+00	2.1E-02	1.4E-01	2.1E-02	EPA R10 Tribal Consumption of Seafood.
108-88-3	Toluene	1.00E+03	2.3E+03	1.00E+03	6.4E+02	--	--	--	--	--	--	2.0E+05	1.5E+04	1.3E+03	8.7E+03	1.3E+03	EPA R10 Tribal Consumption of Seafood.
71-55-6	1,1,1-Trichloroethane	2.00E+02	9.1E+03	2.00E+02	1.6E+04	--	--	--	--	--	--	--	--	4.6E+04	3.1E+05	4.6E+04	EPA R10 Tribal Consumption of Seafood.
79-00-5	1,1,2-Trichloroethane	5.00E+00	1.5E+02	5.00E+00	7.7E-01	--	--	--	--	--	--	4.2E+01	1.6E+01	2.3E+00	1.6E+01	2.3E+00	EPA R10 Tribal Consumption of Seafood.
79-01-6	Trichloroethene (TCE)	5.00E+00	2.0E+00	5.00E+00	4.9E-01	--	--	--	--	--	--	8.1E+01	3.0E+01	5.1E-01	3.6E+00	5.1E-01	EPA R10 Tribal Consumption of Seafood.
120-82-1	1,2,4-trichlorobenzene	7.00E+01	2.3E+00	7.00E+01	1.5E+00	--	--	--	--	--	--	--	7.0E+01	1.3E-01	9.3E-01	1.3E-01	EPA R10 Tribal Consumption of Seafood.
75-69-4	Trichlorofluoromethane	--	1.3E+03	--	2.4E+03	--	--	--	--	--	--	--	--	6.9E+03	4.6E+04	6.9E+03	EPA R10 Tribal Consumption of Seafood.
76-13-1	1,1,2-Trichlorotrifluoroethane	--	5.9E+04	--	2.4E+05	--	--	--	--	--	--	--	--	--	--	5.9E+04	Surrogate Value: EPA RSL Tap Water Criteria.
75-01-4	Vinyl chloride	2.0E+00	1.6E-02	2.00E+00	2.9E-02	--	--	--	--	--	--	5.3E+02	2.4E+00	--	--	2.4E+00	EPA AWQC to protect human consumption of seafood.
108-38-3	m-Xylene	--	1.2E+03	--	1.6E+03	--	--	--	--	--	--	--	--	1.3E+03	8.9E+03	1.3E+03	EPA R10 Tribal Consumption of Seafood.
95-47-6	o-Xylene	--	1.2E+03	--	1.6E+03	--	--	--	--	--	--	--	--	1.6E+03	1.1E+04	1.6E+03	EPA R10 Tribal Consumption of Seafood.
106-42-3	p-Xylene	--	1.2E+03	--	1.6E+03	--	--	--	--	--	--	--	--	1.6E+03	1.1E+04	1.6E+03	EPA R10 Tribal Consumption of Seafood.
10330-20-7	Xylenes (total)	1.0E+04	2.0E+02	1.00E+04	1.6E+03	--	--	--	--	--	--	--	--	1.5E+03	1.0E+04	1.5E+03	EPA R10 Tribal Consumption of Seafood.

Notes:

1 Not all chemicals are constituents needing TMCLs at Boeing Plant 2.
2 Drinking water standards/criteria are not applicable to Boeing Plant 2 unless no other applicable standard exists for a constituent needing a TMCL in groundwater.
3 The standards are potentially applicable to groundwater that may be used for drinking water supplies. Ecology determines the maximum beneficial use of groundwater, which may or may not include drinking.
4 National Primary Drinking Water Regulations, Maximum Contaminant Levels (MCLs); http://water.epa.gov/drink/contaminants/index.cfm
5 EPA RSL, Residential Tapwaters; http://www.epa.gov/region9/superfund/prg/.
6 Washington Primary Drinking Water Standards WAC 246-290-130, Maximum Contaminant Levels (MCLs).
7 Standard MTCA Method B uses WAC 173-340-740, equations 730-1 and 730-2 (Ecology 2007). Parameters and toxicity factors can be found in associated tables in this attachment.
8 National Toxics Rule (NTR), 40 CFR 131.36.
9 EPA Ambient Water Quality Criteria (AWQCs), Clean Water Action Section 304.
10 Washington Surface Water Quality Standards; WAC 173-201A, Surface Water Quality Criteria.
11 EPA and Ecology fish consumption scenarios are based on MTCA Method B Surface Water Equations (equations 730-1 and 730-2); however, they use different exposure assumptions. Details are given in associated tables in this attachment.
12 This column uses the approach described in Note 8, but selects the lower concentrations that are protective of special populations including Tribal and Asian/Pacific Islander; the lowest concentration is always associated with Tribal exposure.
13 This column is included for comparison only and is based on the default exposure scenario in MTCA 173-340-730.

Abbreviations:

CAS Chemcial abstract number
Ecology Washington State Department of Ecology
EPA U.S. Environmental Protection Agency
MCL Maximum contaminant level
MTCA Model Toxics Control Act
R10 Region 10
RSL Regional screening level

Table A.2d
Ambient Air Calculations

CAS Number	Chemical	EPA RSL Calculations				Ecology Calculations			
		Residential		Worker (Target Risk Modified)[1]		Residential (MTCA B)		Worker (Exposure Frequency Modified)[2]	
		Cancer ($\mu g/m^3$)	Non-cancer ($\mu g/m^3$)	Cancer ($\mu g/m^3$)	Non-cancer ($\mu g/m^3$)	Cancer ($\mu g/m^3$)	Non-cancer ($\mu g/m^3$)	Cancer ($\mu g/m^3$)	Non-cancer ($\mu g/m^3$)
67-64-1	Acetone	--	3.2E+04	--	1.4E+05	--	1.4E+03	--	7.9E+03
71-43-2	Benzene	3.1E-01	3.1E+01	1.6E+01	1.3E+02	3.2E-01	6.4E+00	3.2E+00	3.5E+01
78-93-3	2-Butanone (MEK)	--	5.2E+03	--	2.2E+04	--	9.6E+02	--	5.2E+03
75-15-0	Carbon Disulfide	--	7.3E+02	--	3.1E+03	--	1.6E+02	--	8.7E+02
56-23-5	Carbon Tetrachloride	4.1E-01	1.0E+02	2.0E+01	4.4E+02	4.2E-01	6.4E+00	4.2E+00	3.5E+01
108-90-7	Chlorobenzene	--	5.2E+01	--	2.2E+02	--	3.2E+01	--	1.7E+02
75-00-3	Chloroethane	--	1.0E+04	--	4.4E+04	--	--	--	--
67-66-3	Chloroform	1.1E-01	1.0E+02	5.3E+00	4.3E+02	1.1E-01	1.6E+01	1.1E+00	8.7E+01
74-87-3	Chloromethane	--	9.4E+01	--	3.9E+02	1.4E+00	--	1.4E+01	--
106-43-4	4-Chlorotoluene	--	--	--	--	--	--	--	--
95-50-1	1,2-Dichlorobenzene	--	2.1E+02	--	8.8E+02	--	1.4E+02	--	7.9E+02
106-46-7	1,4-Dichlorobenzene	2.2E-01	8.3E+02	1.1E+01	3.5E+03	--	1.1E+02	--	6.1E+02
75-34-3	1,1-Dichloroethane	1.5E+00	--	7.7E+01	--	--	3.2E+02	--	1.7E+03
107-06-2	1,2-Dichloroethane	9.4E-02	2.5E+03	4.7E+00	1.1E+04	9.6E-02	--	9.6E-01	--
75-35-4	1,1-Dichloroethene	--	2.1E+02	--	8.8E+02	--	8.0E+01	--	4.4E+02
156-59-2	*cis* -1,2-Dichloroethene[3]	--	--	--	--	--	3.2E+00	--	1.7E+01
156-60-5	*trans* -1,2-Dichloroethene[3]	--	--	--	--	--	3.2E+01	--	1.7E+02
78-87-5	1,2-Dichloropropane	2.4E-01	4.2E+00	1.2E+01	1.8E+01	--	1.4E+02	--	7.9E+02
100-41-4	Ethylbenzene	9.7E-01	1.0E+03	4.9E+01	4.4E+03	--	1.6E+02	--	8.7E+02
98-82-8	Isopropylbenzene(cumene)	--	4.2E+02	--	1.8E+03	--	1.6E+02	--	8.7E+02
591-78-6	2-Hexanone	--	3.1E+01	--	1.3E+02	--	8.0E+00	--	4.4E+01
75-09-2	Methylene Chloride	5.2E+00	1.0E+03	2.6E+02	4.4E+03	5.3E+00	9.6E+01	5.3E+01	5.2E+02
108-10-1	Methyl Isobutyl Ketone	--	3.1E+03	--	1.3E+04	--	1.3E+02	--	7.0E+02
91-20-3	Naphthalene	7.2E-02	3.1E+00	3.6E+00	1.3E+01	--	3.2E+01	--	1.7E+02
100-42-5	Styrene	--	1.0E+03	--	4.4E+03	--	3.2E+02	--	1.7E+03
79-34-5	1,1,2,2-Tetrachloroethane	4.2E-02	--	2.1E+00	--	--	3.2E+01	--	1.7E+02
127-18-4	Tetrachloroethene (PCE)	4.1E-01	2.4E+03	2.1E+01	9.9E+03	--	1.6E+01	--	8.7E+01
108-88-3	Toluene	--	5.2E+03	--	2.2E+04	--	1.3E+02	--	7.0E+02
71-55-6	1,1,1-Trichloroethane	--	5.2E+03	--	2.2E+04	--	3.2E+03	--	1.7E+04
79-00-5	1,1,2-Trichloroethane	1.5E-01	--	7.7E+00	--	1.6E-01	6.4E+00	1.6E+00	3.5E+01
79-01-6	Trichloroethene (TCE)	1.2E-01	1.0E+04	6.1E+00	4.4E+04	--	4.8E-01	--	2.6E+00
120-82-1	1,2,4-trichlorobenzene[3]	--	--	--	--	--	1.6E+01	--	8.7E+01
75-69-4	Trichlorofluoromethane	--	7.3E+02	--	3.1E+03	--	4.8E+02	--	2.6E+03
76-13-1	1,1,2-Trichlorotrifluoroethane	--	3.1E+02	--	1.3E+03	--	4.8E+04	--	2.6E+05
75-01-4	Vinyl chloride[4]	2.8E-01	1.0E+02	1.4E+01	4.4E+02	2.8E-01	4.8E+00	2.8E+00	2.6E+01
108-38-3	m-Xylene	--	7.3E+02	--	3.1E+03	--	3.2E+02	--	1.7E+03
95-47-6	o-Xylene	--	7.3E+02	--	3.1E+03	--	3.2E+02	--	1.7E+03
106-42-3	p-Xylene	--	7.3E+02	--	3.1E+03	--	3.2E+02	--	1.7E+03
10330-20-7	Xylenes (total)	--	1.0E+02	--	4.4E+02	--	3.2E+02	--	1.7E+03

Notes:

1 EPA Region 10 (R10) has made a risk management decision to use a 1 in 100,000 excess individual lifetime risk for cancer for workers at Boeing Plant 2. Calculations are based on the EPA RSL equations modified for a total risk of 1.0E-5.

2 Ecology worker exposure was modified from full time (365 days/year x 24 hours/day) to the work week allowed under industrial soil exposure (10 hours/day x 7 days/week x 50 weeks/year) which is consistent with actual work practices at Boeing Plant 2 and is higher than EPA's industrial exposure assumptions. The Ecology Method C (Industrial Air) Cleanup Level does not include this modification.

3 No inhalation toxicity factors are available.

4 Ecology has established the following "rule" for dealing with the mutagenic effects of vinyl chloride; refer to for details: https://fortress.wa.gov/ecy/clarc/FocusSheets/VinylChloride.pdf. EPA R10 has accepted this approach for this site.

Abbreviations:

CAS Chemical abstract number
Ecology Washington State Department of Ecology
EPA U.S. Environmental Protection Agency
MTCA Model Toxics Control Act
RSL Regional screening level

Table A.2e
Ambient Air Equations and Parameters

EPA RSL — **Air Screening Levels from Non-cancer Toxicity**

$$\text{Air Screening Level } (\mu g/m^3) = \frac{(HQ \times AT \times UCF1)}{(EF \times ED \times ET \times UCF2) \times (1/RfC)} = RfC \times \frac{(HQ \times AT \times UCF1)}{(EF \times ED \times ET \times UCF2)}$$

HQ = Hazard quotient (unitless)
AT = Averaging time in days = 365 day/year * Lifetime (years)
ED = Exposure duration (years)
UCF1 = 1,000 g/mg
EF = Exposure frequency (days/year)
ET = Exposure time (hours/day)
UCF2 = 1/24 day/hours
RfC = Reference dose (mg/m^3)

Source: http://www.epa.gov/reg3hwmd/risk/human/rb-concentration_table/usersguide.htm

Exposure Scenarios	HQ (unitless)	AT (days)	ED (years)	EF (days/year)	ET (hours/day)	RfC (mg/m^3)
EPA RSL Residential	1	10,950	30	350	24	<table>
EPA RSL Worker	1	9,125	25	250	8	<table>

Ecology — **Air Cleanup Levels from Non-cancer Toxicity**

Equation 750-1
Non-cancer

$$\text{Air Cleanup Level} = \frac{(RfD \times ABW \times UCF1 \times HQ \times AT)}{(BR \times ABS \times ED \times EF)} = RfD \times \frac{ABW \times UCF \times HQ \times AT}{BR \times ED \times EF \times ABS}$$

RfD = Reference dose as specified in WAC 173-340-708(7)
ABW = Average body weight (kg) over the exposure duration
UCF1 = 1,000 µg/mg
BR = Breathing rate (m^3/day)
ABS = Inhalation absorption fraction (unitless)
HQ = Hazard quotient (unitless)
AT = Averaging time (years)
ED = Exposure duration (years)
EF = Exposure frequency (unitless fraction of full-time exposure, see below)

Exposure Scenarios	RfD (mg/kg-day)	ABW (kg)	HQ (unitless)	AT (years)	BR (m^3/day)	ABS (unitless)	ED (years)	EF (unitless)	Assumptions for Unitless EF Term: hours/day (unitless)	days/week (unitless)	weeks/year (unitless)
DEFAULT MTCA Method B	<table>	16	1	6	10	1	6	1.00	24	7	52
DEFAULT MTCA Method C	<table>	70	1	6	20	1	6	1.00	24	7	52
MTCA with Standard Worker Exposure	<table>	70	1	6	20	1	6	0.23	8	5	50
MTCA with MTCA Soil Exposure[1]	<table>	70	1	6	20	1	6	0.40	10	7	50

EPA RSL — **Air Screening Levels for Cancer Risk**

$$\text{Air Screening Level } (\mu g/m^3) = \frac{(TR \times AT)}{(EF \times ED \times ET \times UCF1 \times IUR)} = \frac{1}{IUR} \times \frac{(TR \times AT)}{(EF \times ED \times ET \times UCF1)}$$

TR = Target excess individual lifetime cancer risk (unitless)
AT = Averaging time in days = 365 day/year * Lifetime (years)
LT = Life time (years)
EF = Exposure frequency (days/year)
ED = Exposure duration (years)
ET = Exposure time (hours/day)
UCF1 = 1/24 day/hours
IUR = Inhalation unit risk ($m^3/\mu g$)

Source: http://www.epa.gov/reg3hwmd/risk/human/rb-concentration_table/usersguide.htm

Exposure Scenarios	TR (unitless)	AT (days)	LT (years)	ED (years)	EF (days/year)	ET (hours/day)	IUR (mg/m^3)
EPA RSL Residential	1.00E-06	25,550	70	30	350	24	<table>
EPA RSL Worker, Modified[2]	1.00E-05	25,550	70	25	250	8	<table>

Ecology — **Air Cleanup Levels from Cancer Risk**

Equation 750-2
Cancer

$$\text{Air Cleanup Level} = \frac{(RISK \times ABW \times AT \times UCF1)}{(CPF_i \times BR \times ABS \times ED \times EF)} = \frac{1}{CPF_i} \times \frac{(RISK \times ABW \times AT \times UCF1)}{(BR \times ABS \times ED \times EF)}$$

RISK = Acceptable excess individual lifetime cancer risk level (unitless)
ABW = Average body weight (kg) over the exposure duration
AT = Averaging time (years)
UCF1 = 1,000 mg/kg
CPF_i = Carcinogenic potency factor as specified in WAC 173-340-708(8)
BR = Breathing rate (m^3/day)
ABS = Inhalation absorption fraction (unitless)
ED = Exposure duration (years)
EF = Exposure frequency (unitless fraction of full-time exposure, see below)

Exposure Scenarios	RISK (unitless)	ABW (kg)	AT (years)	CPF_i (kg-day/mg)	BR (m^3/day)	ABS (unitless)	ED (years)	EF (unitless)	Assumptions for Unitless EF Term: hours/day (unitless)	days/week (unitless)	weeks/year (unitless)
DEFAULT MTCA Method B	1.00E-06	70	75	<table>	20	1	30	1	24	7	52
DEFAULT MTCA Method C	1.00E-05	70	75	<table>	20	1	30	1	24	7	52
MTCA with Standard Worker Exposure	1.00E-05	70	75	<table>	20	1	20	0.23	8	5	50
MTCA with MTCA Soil Exposure[1]	1.00E-05	70	75	<table>	20	1	20	0.40	10	7	50

Notes:

1 Ecology worker exposure was modified from full time (365 days/year x 24 hours/day) to the work week allowed under industrial soil exposure (10 hours/day x 7 days/week x 50 weeks/year).
2 EPA Region 10 (R10) has made a risk management decision to use a 1 in 100,000 risk for excess individual lifetime cancer for workers at Boeing Plant 2. Calculations are based on the EPA RSL equations modified for a total risk of 1.0E-5.

Abbreviations:

Ecology Washington State Department of Ecology
EPA U.S. Environmental Protection Agency
MTCA Model Toxics Control Act
RSL Regional screening level

Table A.2f
Soil Calculations

		Direct Contact Exposures																								Protection of Groundwater	
		Ecology Default Calculations				EPA RSL Calculations with Site-specific Factors																Proposed TMCLs				MTCA Three-phase Model for Unsaturated Soils	
		Residential		Industrial		Residential Exposure								Worker Exposure[1]								Direct Contact Exposure					
		MTCA Method B with CLARC Values		MTCA Method C with CLARC Values		Cancer Risk with EPA RSL Calculations, Parameters, and Toxicity Factors				Non-cancer Risk with EPA RSL Calculations, Parameters, and Toxicity Factors				Cancer Risk with EPA RSL Calculations, Parameters, and Toxicity Factors				Non-cancer Risk with EPA RSL Calculations, Parameters, and Toxicity Factors				Residential		Industrial/Worker		Groundwater Target to be Protected[2]	Three-phase Partitioning Between Soil, Soil Vapor, and Groundwater using MTCA Equation[3]
CAS Number	Chemical	Cancer (mg/kg)	Non-cancer (mg/kg)	Cancer (mg/kg)	Non-cancer (mg/kg)	Ingestion (mg/kg)	Dermal (mg/kg)	Inhalation (mg/kg)	TOTAL (mg/kg)	Ingestion (mg/kg)	Dermal (mg/kg)	Inhalation (mg/kg)	TOTAL (mg/kg)	Ingestion (mg/kg)	Dermal (mg/kg)	Inhalation (mg/kg)	TOTAL (mg/kg)	Ingestion (mg/kg)	Dermal (mg/kg)	Inhalation (mg/kg)	TOTAL (mg/kg)	MTCA B (mg/kg)	EPA RSL (mg/kg)	MTCA C (mg/kg)	Modified EPA RSL (mg/kg)	(µg/L)	(mg/kg)
67-64-1	Acetone	--	7.2E+04	--	3.1E+06	--	--	--	--	7.0E+04	--	4.8E+05	6.1E+04	--	--	--	--	4.6E+05	--	2.0E+06	3.7E+05	7.2E+04	6.1E+04	3.1E+06	3.7E+05	1.1E+05	5.1E+02
71-43-2	Benzene	1.8E+01	3.2E+02	2.4E+03	1.4E+04	1.2E+01	--	1.2E+00	1.1E+00	3.1E+02	--	1.2E+02	8.6E+01	2.6E+02	--	6.0E+01	4.9E+01	2.0E+03	--	5.0E+02	4.0E+02	1.8E+01	1.1E+00	2.4E+03	4.9E+01	2.0E+00	9.3E-02
78-93-3	2-Butanone (MEK)	--	4.8E+04	--	2.1E+06	--	--	--	--	4.7E+04	--	6.8E+04	2.8E+04	--	--	--	--	3.1E+05	--	2.9E+05	1.5E+05	4.8E+04	2.8E+04	2.1E+06	1.5E+05	7.3E+04	4.3E+02
75-15-0	Carbon Disulfide	--	8.0E+03	--	3.5E+05	--	--	--	--	7.8E+03	--	9.2E+02	8.2E+02	--	--	--	--	5.1E+04	--	3.9E+03	3.6E+03	8.0E+03	8.2E+02	3.5E+05	3.6E+03	3.9E+03	7.5E+01
56-23-5	Carbon Tetrachloride	1.4E+01	3.2E+02	1.9E+03	1.4E+04	9.1E+00	--	6.5E-01	6.1E-01	3.1E+02	--	1.7E+02	1.1E+02	2.0E+02	--	3.3E+01	2.8E+01	2.0E+03	--	7.1E+02	5.2E+02	1.4E+01	6.1E-01	1.9E+03	2.8E+01	4.6E-01	2.1E-02
108-90-7	Chlorobenzene	--	1.6E+03	--	7.0E+04	--	--	--	--	1.6E+03	--	3.6E+02	2.9E+02	--	--	--	--	1.0E+04	--	1.5E+03	1.3E+03	1.6E+03	2.9E+02	7.0E+04	1.3E+03	2.7E+02	2.6E+01
75-00-3	Chloroethane	--	--	--	--	--	--	--	--	--	--	1.4E+04	1.4E+04	--	--	--	--	--	--	6.1E+04	6.1E+04	--	1.4E+04	--	6.1E+04	2.1E+04	2.8E+02
67-66-3	Chloroform	--	8.0E+02	--	3.5E+04	2.1E+01	--	3.0E-01	3.0E-01	7.8E+02	--	2.9E+02	2.1E+02	4.6E+02	--	1.5E+01	1.5E+01	5.1E+03	--	1.2E+03	9.8E+02	8.0E+02	3.0E-01	3.5E+04	1.5E+01	9.4E+00	2.0E-01
74-87-3	Chloromethane	--	--	--	--	--	--	--	--	--	--	1.2E+02	1.2E+02	--	--	--	--	--	--	5.0E+02	5.0E+02	--	1.2E+02	--	5.0E+02	1.9E+02	1.6E+00
106-43-4	4-Chlorotoluene	--	--	--	--	--	--	--	--	--	--	--	--	--	--	--	--	--	--	--	--	--	--	--	--	2.6E+03	4.0E+02
95-50-1	1,2-Dichlorobenzene	--	7.2E+03	--	3.1E+05	--	--	--	--	7.0E+03	--	2.6E+03	1.9E+03	--	--	--	--	4.6E+04	--	1.1E+04	8.9E+03	7.2E+03	1.9E+03	3.1E+05	8.9E+03	4.4E+02	6.8E+01
106-46-7	1,4-Dichlorobenzene	--	--	--	--	1.2E+02	--	2.5E+00	2.4E+00	5.5E+03	--	9.3E+03	3.5E+03	2.6E+03	--	1.2E+02	1.2E+02	3.6E+04	--	3.9E+04	1.9E+04	--	2.4E+00	--	1.2E+02	1.7E+00	3.5E-01
75-34-3	1,1-Dichloroethane	--	1.6E+04	--	7.0E+05	1.1E+02	--	3.4E+00	3.3E+00	1.6E+04	--	--	1.6E+04	2.5E+03	--	1.7E+02	1.6E+02	1.0E+05	--	--	1.0E+05	1.6E+04	3.3E+00	7.0E+05	1.6E+02	3.3E+01	7.1E-01
107-06-2	1,2-Dichloroethane	1.1E+01	1.6E+03	1.4E+03	7.0E+04	7.0E+00	--	4.6E-01	4.3E-01	--	--	1.2E+04	1.2E+04	1.6E+02	--	2.3E+01	2.0E+01	--	--	5.2E+04	5.2E+04	1.1E+01	4.3E-01	1.4E+03	2.0E+01	3.6E+00	7.0E-02
75-35-4	1,1-Dichloroethene	--	4.0E+03	--	1.7E+05	--	--	--	--	3.9E+03	--	2.6E+02	2.4E+02	--	--	--	--	2.6E+04	--	1.1E+03	1.0E+03	4.0E+03	2.4E+02	1.7E+05	1.0E+03	3.2E+00	8.1E-02
156-59-2	*cis* -1,2-Dichloroethene	--	1.6E+02	--	7.0E+03	--	--	--	--	1.6E+02	--	--	1.6E+02	--	--	--	--	1.0E+03	--	--	1.0E+03	1.6E+02	1.6E+02	7.0E+03	1.0E+03	1.3E+02	2.6E+00
156-60-5	*trans* -1,2-Dichloroethene	--	1.6E+03	--	7.0E+04	--	--	--	--	1.6E+03	--	--	1.6E+03	--	--	--	--	1.0E+04	--	--	1.0E+04	1.6E+03	1.6E+03	7.0E+04	1.0E+04	9.4E+02	1.9E+01
78-87-5	1,2-Dichloropropane	--	--	--	--	1.8E+01	--	9.4E-01	8.9E-01	7.0E+03	--	1.6E+01	1.6E+01	4.0E+02	--	4.7E+01	4.2E+01	4.6E+04	--	6.8E+01	6.8E+01	--	8.9E-01	--	4.2E+01	3.7E+00	9.2E-02
100-41-4	Ethylbenzene	--	8.0E+03	--	3.5E+05	5.8E+01	--	5.9E+00	5.4E+00	7.8E+03	--	6.4E+03	3.5E+03	1.3E+03	--	3.0E+02	2.4E+02	5.1E+04	--	2.7E+04	1.8E+04	8.0E+03	5.4E+00	3.5E+05	2.4E+02	1.7E+00	2.3E-01
98-82-8	Isopropylbenzene(cumene)	--	8.0E+03	--	3.5E+05	--	--	--	--	7.8E+03	--	2.8E+03	2.1E+03	--	--	--	--	5.1E+04	--	1.2E+04	9.5E+03	8.0E+03	2.1E+03	3.5E+05	9.5E+03	2.7E+02	7.8E+01
591-78-6	2-Hexanone	--	4.0E+02	--	1.7E+04	--	--	--	--	3.9E+02	--	4.5E+02	2.1E+02	--	--	--	--	2.6E+03	--	1.9E+03	1.1E+03	4.0E+02	2.1E+02	1.7E+04	1.1E+03	3.2E+03	3.2E+01
75-09-2	Methylene Chloride	1.3E+02	4.8E+03	1.8E+04	2.1E+05	8.5E+01	--	1.2E+01	1.1E+01	4.7E+03	--	2.5E+03	1.6E+03	1.9E+03	--	6.2E+02	4.7E+02	3.1E+04	--	1.0E+04	7.7E+03	1.3E+02	1.1E+01	1.8E+04	4.7E+02	6.1E+01	6.5E-01
108-10-1	Methyl Isobutyl Ketone	--	6.4E+03	--	2.8E+05	--	--	--	--	6.3E+03	--	3.6E+04	5.3E+03	--	--	--	--	4.1E+04	--	1.5E+05	3.2E+04	6.4E+03	5.3E+03	2.8E+05	3.2E+04	1.9E+04	1.7E+02
91-20-3	Naphthalene	--	1.6E+03	--	7.0E+04	--	--	3.6E+00	3.6E+00	1.6E+03	4.3E+03	1.6E+02	1.4E+02	--	--	1.8E+02	1.8E+02	1.0E+04	2.4E+04	6.6E+02	6.0E+02	1.6E+03	3.6E+00	7.0E+04	1.8E+02	2.6E+01	1.6E+01
100-42-5	Styrene	--	1.6E+04	--	7.0E+05	--	--	--	--	1.6E+04	--	1.1E+04	6.3E+03	--	--	--	--	1.0E+05	--	4.4E+04	3.1E+04	1.6E+04	6.3E+03	7.0E+05	3.1E+04	7.7E+04	2.1E+04
79-34-5	1,1,2,2-Tetrachloroethane	5.0E+00	1.6E+03	6.6E+02	7.0E+04	3.2E+00	--	6.8E-01	5.6E-01	1.6E+03	--	--	1.6E+03	7.2E+01	--	3.4E+01	2.3E+01	1.0E+04	--	--	1.0E+04	5.0E+00	5.6E-01	6.6E+02	2.3E+01	3.3E-01	1.3E-02
127-18-4	Tetrachloroethene (PCE)	--	8.0E+02	--	3.5E+04	1.2E+00	--	1.0E+00	5.6E-01	7.8E+02	--	6.0E+03	6.9E+02	2.6E+01	--	5.3E+01	1.8E+01	5.1E+03	--	2.5E+04	4.2E+03	8.0E+02	5.6E-01	3.5E+04	1.8E+01	2.1E-02	1.6E-03
108-88-3	Toluene	--	6.4E+03	--	2.8E+05	--	--	--	--	6.3E+03	--	2.4E+04	5.0E+03	--	--	--	--	4.1E+04	--	1.0E+05	2.9E+04	6.4E+03	5.0E+03	2.8E+05	2.9E+04	1.3E+03	1.0E+02
71-55-6	1,1,1-Trichloroethane	--	1.6E+05	--	7.0E+06	--	--	--	--	1.6E+05	--	9.2E+03	8.7E+03	--	--	--	--	1.0E+06	--	3.9E+04	3.7E+04	1.6E+05	8.7E+03	7.0E+06	3.7E+04	4.6E+04	1.9E+03
79-00-5	1,1,2-Trichloroethane	1.8E+01	3.2E+02	2.3E+03	1.4E+04	1.1E+01	--	1.2E+00	1.1E+00	3.1E+02	--	--	3.1E+02	2.5E+02	--	6.0E+01	4.8E+01	2.0E+03	--	--	2.0E+03	1.8E+01	1.1E+00	2.3E+03	4.8E+01	2.3E+00	7.3E-02
79-01-6	Trichloroethene (TCE)	1.1E+01	2.4E+01	1.5E+03	1.0E+03	4.9E+00	--	2.9E-01	2.7E-01	2.3E+01	--	2.5E+04	2.3E+01	1.1E+02	--	1.5E+01	1.3E+01	1.5E+02	--	1.0E+05	1.5E+02	1.1E+01	2.7E-01	1.0E+03	1.3E+01	5.1E-01	1.8E-02
120-82-1	1,2,4-trichlorobenzene	3.4E+01	8.0E+02	4.5E+03	3.5E+04	2.2E+01	--	--	2.2E+01	7.8E+02	--	--	7.8E+02	4.9E+02	--	--	4.9E+02	5.1E+03	--	--	5.1E+03	3.4E+01	2.2E+01	4.5E+03	4.9E+02	1.3E-01	8.0E-02
75-69-4	Trichlorofluoromethane	--	2.4E+04	--	1.0E+06	--	--	--	--	2.3E+04	--	8.1E+02	7.8E+02	--	--	--	--	1.5E+05	--	3.4E+03	3.3E+03	2.4E+04	7.8E+02	1.0E+06	3.3E+03	6.9E+03	2.0E+02
76-13-1	1,1,2-Trichlorotrifluoroethane	--	2.4E+06	--	1.0E+08	--	--	--	--	2.3E+06	--	4.3E+02	4.3E+02	--	--	--	--	1.5E+07	--	1.8E+03	1.8E+03	2.4E+06	4.3E+02	1.0E+08	1.8E+03	5.9E+04	7.1E+03
75-01-4	Vinyl chloride[4]	6.7E-01	2.4E+02	8.8E+01	1.0E+04	4.3E-01	--	8.1E-05	8.1E-05	2.3E+02	--	1.1E+02	7.4E+01	9.5E+00	--	4.1E-03	4.1E-03	1.5E+03	--	4.5E+02	3.5E+02	6.7E-01	8.1E-05	8.8E+01	4.1E-03	2.4E+00	3.4E-02
108-38-3	m-Xylene	--	1.6E+04	--	7.0E+05	--	--	--	--	1.6E+04	--	4.3E+03	3.4E+03	--	--	--	--	1.0E+05	--	1.8E+04	1.5E+04	1.6E+04	3.4E+03	7.0E+05	1.5E+04	1.3E+03	1.6E+02
95-47-6	o-Xylene	--	1.6E+04	--	7.0E+05	--	--	--	--	1.6E+04	--	5.1E+03	3.8E+03	--	--	--	--	1.0E+05	--	2.1E+04	1.8E+04	1.6E+04	3.8E+03	7.0E+05	1.8E+04	1.6E+03	2.0E+02
106-42-3	p-Xylene	--	1.6E+04	--	7.0E+05	--	--	--	--	1.6E+04	--	4.4E+03	3.4E+03	--	--	--	--	1.0E+05	--	1.8E+04	1.6E+04	1.6E+04	3.4E+03	7.0E+05	1.6E+04	1.6E+03	2.3E+02
10330-20-7	Xylenes (total)	--	1.6E+04	--	7.0E+05	--	--	--	--	1.6E+04	--	6.5E+02	6.3E+02	--	--	--	--	1.0E+05	--	2.7E+03	2.7E+03	1.6E+04	6.3E+02	7.0E+05	2.7E+03	1.5E+03	2.0E+02

Notes:

1 EPA RSL Worker scenario has been modified to a 1 in 100,000 excess individual lifetime cancer risk and a soil ingestion rate of 200 mg/kg-day by an EPA Region 10 risk management decision.
2 Refer to Table A.2b, Groundwater Standards, Criteria, and Risk-based Calculations, of this attachment.
3 Soil to Groundwater cleanup values are based on the MTCA fixed parameter three-phase partitioning model (WAC 173-340-747, equations 747-1 and 747-2), using partitioning factors presented in associated tables in this attachment.
4 Ecology has established the following "rule" for dealing with the mutagenic effects of vinyl chloride; refer to for details: https://fortress.wa.gov/ecy/clarc/FocusSheets/VinylChloride.pdf. EPA R10 has accepted this approach for this site.

Abbreviations:

CAS Chemical abstract number
CLARC Cleanup Levels and Risk Calculation
Ecology Washington State Department of Ecology
EPA U.S. Environmental Protection Agency
MTCA Model Toxics Control Act
RSL Regional screening level

Table A.2g
Soil Equations and Parameters

Ecology — **Soil Cleanup Levels from Non-Cancer Effects for Ingestion Only**

Equation 740-1
Non-cancer

Soil Cleanup Level (mg/kg)= **EPA $SSL_{SOIL\text{-}NC\text{-}ING}$ =**

$$\frac{(RfD_o \times ABW \times UCF \times HQ \times AT)}{(SIR \times AB1 \times EF \times ED)}$$

Terminology in MTCA			Terminology in EPA RSL Equation	
RfD_o =	Reference dose (mg/kg-day) as specified in WAC 173-340-708(7)			
ABW =	Average body weight (kg) over the exposure duration	=	BW	Body weight (kg)
UCF =	Unit coversion factor (mg/kg)	=	same	
SIR =	Soil ingestion rate (mg/kg)	=	IRS	Ingestion rate soil (mg/day)
AB1 =	Gastrointestinal absorption fraction	=	not used	
HQ =	Hazard quotient (unitless)	=	THQ	Target hazard quotient (unitless)
AT =	Averaging time (years)	=	AT	Averaging time (days)
ED =	Exposure duration (years)	=	ED	Exposure duration (years)
EF =	Exposure frequency (fraction of time)	=	EF	Exposure frequency (days/year)

Exposure Scenarios	RfD_o (mg/kg-day)	ABW (kg)	HQ (unitless)	AT (years)	SIR (mg/day)	AB1 (unitless)	EF (unitless)	ED (years)	Assumptions for Unitless EF Term: Total Days (unitless)	hours/day (unitless)	days/week (unitless)	weeks/year (unitless)
MTCA Method B Residential Child	<table>	16	1	6	200	1	1.00	6	365	24	7	52
MTCA Method C Worker	<table>	70	1	20	50	1	0.40	20	350	10	7	50
EPA RSL Residental Child	<table>	15	1	6	200	1	0.96	6	350			
EPA RSL Residental Adult	<table>	70	1	25	100	1	0.96	25	350			
Modified EPA RSL Worker[1,2]	<table>	70	1	25	200	1	0.69	25	250			

EPA RSL — **Soil Screening Levels from Non-cancer Effects**

Soil Screening level (mg/kg) =

$$\frac{1}{\overset{<\text{----------Ingestion of Soil Term----------}>}{SSL_{SOIL\text{-}NC\text{-}ING}}} + \frac{1}{\overset{<\text{------Dermal Contact with Soil Term-------}>}{SSL_{SOIL\text{-}NC\text{-}DER}}} + \frac{1}{\overset{<\text{----------Inhalation of Dust----------}>}{SSL_{SOIL\text{-}NC\text{-}INH}}}$$

$SSL_{SOIL\text{-}NC\text{-}ING}$ = **Use the MTCA equation above for ingestion**

$$SSL_{SOIL\text{-}NC\text{-}DER} = \frac{THQ \times BW \times AT \times RfD_d \times UCF1}{EF \times ED \times SA \times AF \times ABS_d} = \frac{RfD_d}{ABS_d} \times \frac{THQ \times BW \times AT \times UCF1}{EF \times ED \times SA \times AF}$$

$$SSL_{SOIL\text{-}NC\text{-}INH} = \frac{THQ \times AT}{(1/RfC_i) \times EF \times ED \times ET \times UCF2 \times [(1/PEF) + (1/VF)]} = \frac{RfC_i}{[1/VF + 1/PEF]} \times \frac{THQ \times AT}{EF \times ED \times ET \times UCF2}$$

THQ = Target Hazard Quotient (or HQ Hazard Quotient), unitless
BW = Body Weight (kg)
AT = Averaging Time (total number of days in the averaging time: 6 yrs for children; 25 years for workers)
RfD_d = Dermal reference dose (mg/kg-day) = RfD_o * GI-abs
GI-abs = GI absorption factor correction
UCF1 = 1,000,000 mg/kg
EF = Exposure frequency (days/year)
ED = Exposure duration (years)
ET = Exposure time (hours/day)
SA = Surface area exposed (cm^2/day)
AF = Adherence factor (mg/cm^2)
ABS_d = Skin absorption factor (unitless)
RfC_i = Reference concentration, inhalation (mg/m^3; chemical specific)
PEF = Particulate emission factor used for dusts (m^3/kg; 1.4 E+9 from EPA RSL User Manual)
VF = Volatilization factor used for volatile organic compounds (m^3/kg; chemical specific)
UCF2 = 1/24 day/hours

Source: http://www.epa.gov/reg3hwmd/risk/human/rb-concentration_table/usersguide.htm

Exposure Scenarios	THQ (unitless)	BW (kg)	AT (days)	RfD_d (mg/kg-day)	ED (years)	EF (days/year)	ET (hours/day)	IRS (mg/day)	SA (cm^2/day)	AF (mg/cm^2)	ABS_d (unitless)	RfC_i (mg/m^3)	VF (m^3/kg)	PEF (m3/kg)	1/VF + 1/PEF (m^3/kg)
EPA RSL Residential (Child)	1	15	2,190	<table>	6	350	24	200	2,800	0.2	<table>	<table>	<table>	1.36E+09	<table>
Modified EPA RSL Worker[1,2]	1	70	9,125	<table>	25	250	8	200	3,300	0.2	<table>	<table>	<table>	1.36E+09	<table>

Ecology — **Soil Cleanup Levels from Cancer Risk for Ingestion Only**

Equation 740-2
Cancer

Soil Cleanup Level (mg/kg) =

$$\frac{(RISK \times ABW \times AT \times UCF)}{(CPF_o \times SIR \times AB1 \times ED \times EF)}$$

RISK = Acceptable excess individual lifetime cancer risk level (unitless)
ABW = Average body weight (kg) over the exposure duration
AT = Averaging time (years)
UCF = 1,000,000 mg/kg
CPF_o = Carcinogenic potency factor (kg-day/mg)
SIR = Soil ingestion rate (mg/day)
AB1 = Gastrointestinal absorbtion fraction (unitless)
ED = Exposure duration (years)
EF = Exposure frequency (unitless)

Exposure Scenarios	RISK (unitless)	ABW (kg)	AT (years)	CPF_o (kg-day/mg)	SIR (mg/day)	AB1 (unitless)	ED (years)	EF (unitless)	Assumptions for Unitless EF Term: hours/day (unitless)	days/week (unitless)	weeks/year (unitless)
DEFAULT MTCA Method B	1.00E-06	16	75	<table>	200	1	6	1	24	7	52
DEFAULT MTCA Method C	1.00E-05	70	75	<table>	50	1	20	0.4	24	7	52

Table A.2g
Soil Equations and Parameters

EPA RSL — **Soil Screening level for Cancer Risk for Residents (childhood corrected) and Workers**

< ---------- Ingestion of Soil Term ----------> < ------ Dermal Contact with Soil Term -------> < --------- Inhalation of Dust ---------->

$$\text{Soil Screening level (mg/kg)} = \frac{1}{SSL_{SOIL\text{-}CA\text{-}ING}} + \frac{1}{SSL_{SOIL\text{-}CA\text{-}DER}} + \frac{1}{SSL_{SOIL\text{-}CA\text{-}INH}}$$

$$SSL_{SOIL\text{-}CA\text{-}ING} = \frac{TR \times AT}{CSF_o \times EF \times IFS \times UCF1} \quad \text{where} \quad IFS = \frac{ED_c \times IRS_c}{BW_c} + \frac{ED_a \times IRS_a}{BW_a}$$

$$SSL_{SOIL\text{-}CA\text{-}DER} = \frac{TR \times AT}{CSF_d \times EF \times DFS \times ABS_d \times UCF1} \quad \text{where} \quad DFS = \frac{ED_c \times SA_c \times AF_c}{BW_c} + \frac{ED_a \times SA_a \times AF_a}{BW_a}$$

$$SSL_{SOIL\text{-}NC\text{-}INH} = \frac{TR \times AT}{IUR \times UCF2 \times EF \times ED \times ET \times UCF3 \times [(1/PEF) + (1/VF)]} = \frac{1}{IUR*[1/VF + 1/PEF]} \times \frac{TR \times AT}{UCF2 \times EF \times ED \times ET \times UCF3}$$

TR = Target excess individual lifetime cancer risk (unitless)
AT = Averaging time in days = 365 day/year * Lifetime (years)
CSF_o = Oral cancer slope factor (kg-day/mg)
EF = Exposure frequency (days/year)
IFS = Resident soil ingestion rate; age-adjusted (mg-year/kg-day)
UCF1 = 1/1,000,000 kg/mg
ED_c = Exposure duration, child (years)
IRS_c = Resident soil ingestion rate, child; age-adjusted (mg-year/kg-day)
BW_c = Body weight, child (kg)
ED_a = Exposure duration, adult (years)
IRS_a = Resident soil ingestion rate, adult; age-adjusted (mg-year/kg-day)
BW_a = Body weight, adult (kg)
CSF_d = Cancer slope factor, dermal
GI-abs = GI absorption factor correction (unitless)
DFS = Resident soil dermal contact factor; age-adjusted (mg-year/kg-day)
ABS_d = Skin absorption factor (chemical specific)
SA_c = Surface area, child (cm^2/day)
AF_c = Adherence factor, child (mg/cm^2)
SA_a = Surface area, adult (cm^2/day)
AF_a = Adherence factor, adult (mg/cm^2)
IUR = Inhalation unit rate (m^3/µg)
UCF2 = 1,000 µg/m)
UCF3 = 1/24 day/hours
ED = Exposure duration (years)
ET = Exposure time (hours/day)
PEF = Particulate emission factor used for dusts (m^3/kg)
VF = Volatilization factor used for volatile organic compounds (m^3/kg)

Source: http://www.epa.gov/reg3hwmd/risk/human/rb-concentration_table/usersguide.htm

Exposure Scenarios	TR (unitless)	AT (days)	LT (years)	CSF_o (kg-day/mg)	EF (days/year)	ET (hours/day)	IFS (mg-year/kg-day)	IRS (mg-year/kg-day)	ED (years)	BW (kg)	DFS (mg-year/kg-day)	SA (cm^2/day)	AF (mg/cm^2)	ABS_d (unitless)	IUR (m^3/µg)	PEF (m^3/kg)	VF (m^3/kg)	1/VF + 1/PEF (kg/m^3)
EPA RSL Resident	1.00E-06	25,550	70	<table>	350	24	114		30		361			<table>	<table>	1.40E+09	<table>	<table>
Contribution During Childhood								200	6	15	224	2,800	0.2					
Contribution During Adult Years								100	24	70	137	5,700	0.07					
Modified EPA RSL Worker[1,2]	1.00E-05	25,550	70	<table>	250	8	71	200	25	70	236	3,300	0.2	<table>	<table>	1.40E+09	<table>	<table>

Ecology — **Three-phase Partitioning Between Soil, Soil Vapor, and Groundwater Using MTCA Equation**

Equation 747-1

$$\text{Soil Concentration (mg/kg)} = C_s = C_w \times UCF \times DF \times \left(K_d + \frac{(\theta w + \theta_a H_{cc})}{\rho_b} \right) = C_w \times UCF \times DF \times K_d + \frac{C_w \times UCF \times DF \times \theta_w}{\rho_b} + \frac{C_w \times UCF \times DF \times \theta_a \times H_{cc}}{\rho_b} = C_w * (C1*K_d + C2 + C3*H_{cc})$$

where

$$C1 = UCF \times DF$$
$$C2 = \frac{UCF \times DF \times \theta_w}{\rho_b}$$
$$C3 = \frac{UCF \times DF \times \theta_a}{\rho_b}$$

C_w = Ground water cleanup level established under WAC 173-340-720 (µg/L)
UCF = 1/1,000 mg/µg
DF = Dilution factor (dimensionless)
Kd = Distribution coefficient (L/kg)
θ_w = Water-filled soil porosity (ml water/ml soil)
θ_a = Air-filled soil porosity (ml air/ml soil)
H_{cc} = Henry's law constant (dimensionless)
ρ_b = Dry soil bulk density (kg/L)

Exposure Scenarios	C_w (µg/L)	DF (unitless)	K_d (L/kg)	θ_w (ml water/ ml soil)	θ_a (ml air/ ml soil)	H_{cc} (unitless)	ρ_b (kg/L)	C1 (mg/µg)	C2 (L-ml water/ ml soil)	C3 (L-ml air/ ml soil)
Soil Concentration for Saturated Soil	<table>	20	<table>	0.3	0.13	<table>	1.5	0.02	0.004	0.002

Notes:

Indicates no value is required in calculations for the associated exposure scenario indicated.
<table> Indicates a chemical-specific factor is available in the associated tables of this attachment.
1 EPA RSL Worker scenario has been modified to a 1 in 100,000 excess individual lifetime cancer risk and a soil ingestion rate of 200 mg/kg-day by an EPA Region 10 risk management decision.
2 Exposure frequency taken to be 250 days/year. This value was selected based on Region 9 EPA RSL tables last updated November 2010, which uses parameters associated with an indoor worker to calculate risk.

Abbreviations:

EPA U.S. Environmental Protection Agency
MTCA Model Toxics Control Act
RSL Regional screening level
SSL Soil Screening Level

Subscripts:

CA Cancer
DER Dermal
ING Ingestion
INH Inhalation
NC Non-cancer

Table A.2h
Groundwater Calculations

		Surface Water to Fish Consumption Pathway														Drinking Water Pathways			
		EPA Tribal Calculations				Ecology MTCA Calculations						Proposed Water to Fish Consumption TMCLs				EPA		Ecology	
		Tribal Consumption Child Includes EPA BCFs and Toxicity Factors[1]		Tribal Consumption Adult Includes EPA BCFs and Toxicity Factors[1]		Default (Recreational) Includes EPA BCFs and Toxicity Factors[2]		Asian/Pacific Islander Consumption Child Includes EPA BCFs and Toxicity Factors[3]		Asian/Pacific Islander Consumption Adult Includes EPA BCFs and Toxicity Factors[3]		MTCA Default Consumption Rate Modified to Use EPA Toxicity and Partitioning Coefficients		Tribal and/or Asian/Pacific Islander Modified to Use EPA Toxicity and Partitioning Coefficients		EPA RSL Tap Water[4]		MTCA Method B Groundwater to Protect Drinking Water Use[5]	
CAS Number	Chemical	Cancer (µg/L)	Non-cancer (µg/L)	Cancer (µg/L)	Non-cancer (µg/L)	Cancer (µg/L)	Non-cancer (µg/L)	Cancer (µg/L)	Non-cancer (µg/L)	Cancer (µg/L)	Non-cancer (µg/L)	TMCL (µg/L)	Source (µg/L)	TMCL (µg/L)	Source (µg/L)	Cancer (µg/L)	Non-cancer (µg/L)	Cancer (µg/L)	Non-cancer (µg/L)
67-64-1	Acetone	--	1.1E+05	--	2.4E+05	--	7.4E+05	--	1.9E+05	--	3.1E+05	7.4E+05	MTCA B	1.1E+05	Tribal Child	3.3E+04	2.2E+04	--	7.2E+03
71-43-2	Benzene	9.9E+00	1.9E+02	2.0E+00	4.1E+02	1.4E+01	1.3E+03	1.7E+01	3.2E+02	7.1E+00	5.3E+02	1.4E+01	MTCA B	2.0E+00	Tribal Adult	4.1E-01	4.4E+01	8.0E-01	3.2E+01
78-93-3	2-Butanone (MEK)	--	7.3E+04	--	1.6E+05	--	4.9E+05	--	1.2E+05	--	2.1E+05	4.9E+05	MTCA B	7.3E+04	Tribal Child	--	7.1E+03	--	4.8E+03
75-15-0	Carbon Disulfide	--	3.9E+03	--	8.5E+03	--	2.6E+04	--	6.6E+03	--	1.1E+04	2.6E+04	MTCA B	3.9E+03	Tribal Child	--	1.0E+03	--	8.0E+02
56-23-5	Carbon Tetrachloride	2.3E+00	5.4E+01	4.6E-01	1.2E+02	3.2E+00	3.6E+02	3.8E+00	9.1E+01	1.6E+00	1.5E+02	3.2E+00	MTCA B	4.6E-01	Tribal Adult	4.4E-01	8.6E+01	6.3E-01	3.2E+01
108-90-7	Chlorobenzene	--	2.7E+02	--	5.9E+02	--	1.8E+03	--	4.6E+02	--	7.7E+02	1.8E+03	MTCA B	2.7E+02	Tribal Child	--	9.1E+01	--	1.6E+02
75-00-3	Chloroethane	--	--	--	--	--	--	--	--	--	--	--	--	--	Tribal Child	--	2.1E+04	--	--
67-66-3	Chloroform	4.6E+01	1.2E+03	9.4E+00	2.7E+03	6.6E+01	8.2E+03	7.8E+01	2.1E+03	3.3E+01	3.5E+03	6.6E+01	MTCA B	9.4E+00	Tribal Adult	1.9E-01	1.3E+02	--	8.0E+01
74-87-3	Chloromethane	--	--	--	--	--	--	--	--	--	--	--	--	--	Tribal Child	--	1.9E+02	--	--
106-43-4	4-Chlorotoluene	--	--	--	--	--	--	--	--	--	--	--	--	--	Tribal Child	--	2.6E+03	--	--
95-50-1	1,2-Dichlorobenzene	--	4.4E+02	--	9.5E+02	--	2.9E+03	--	7.3E+02	--	1.2E+03	2.9E+03	MTCA B	4.4E+02	Tribal Child	--	3.7E+02	--	7.2E+02
106-46-7	1,4-Dichlorobenzene	8.4E+00	2.7E+02	1.7E+00	6.0E+02	1.2E+01	1.8E+03	1.4E+01	4.6E+02	6.0E+00	7.8E+02	1.2E+01	MTCA B	1.7E+00	Tribal Child	4.3E-01	1.0E+03	--	--
75-34-3	1,1-Dichloroethane	1.6E+02	1.6E+04	3.3E+01	3.5E+04	2.3E+02	1.1E+05	2.7E+02	2.7E+04	1.2E+02	4.5E+04	2.3E+02	MTCA B	3.3E+01	Tribal Adult	2.4E+00	7.3E+03	--	1.6E+03
107-06-2	1,2-Dichloroethane	1.7E+01	--	3.6E+00	--	2.5E+01	--	2.9E+01	--	1.2E+01	--	2.5E+01	MTCA B	3.6E+00	Tribal Adult	1.5E-01	6.4E+02	4.8E-01	1.6E+02
75-35-4	1,1-Dichloroethene	--	2.3E+03	--	5.1E+03	--	1.6E+04	--	3.9E+03	--	6.7E+03	1.6E+04	MTCA B	2.3E+03	Tribal Child	--	3.4E+02	--	4.0E+02
156-59-2	*cis* -1,2-Dichloroethene	--	1.3E+02	--	2.9E+02	--	9.0E+02	--	2.3E+02	--	3.8E+02	9.0E+02	MTCA B	1.3E+02	Tribal Child	--	7.3E+01	--	1.6E+01
156-60-5	*trans* -1,2-Dichloroethene	--	9.4E+02	--	2.0E+03	--	6.3E+03	--	1.6E+03	--	2.7E+03	6.3E+03	MTCA B	9.4E+02	Tribal Child	--	1.1E+02	--	1.6E+02
78-87-5	1,2-Dichloropropane	1.8E+01	5.0E+03	3.7E+00	1.1E+04	2.6E+01	3.4E+04	3.1E+01	8.5E+03	1.3E+01	1.4E+04	2.6E+01	MTCA B	3.7E+00	Tribal Child	3.9E-01	8.3E+00	--	--
100-41-4	Ethylbenzene	8.4E+00	8.0E+02	1.7E+00	1.7E+03	1.2E+01	5.3E+03	1.4E+01	1.3E+03	6.0E+00	2.3E+03	1.2E+01	MTCA B	1.7E+00	Tribal Adult	1.5E+00	1.3E+03	--	8.0E+02
98-82-8	Isopropylbenzene(cumene)	--	2.7E+02	--	6.0E+02	--	1.8E+03	--	4.6E+02	--	7.8E+02	1.8E+03	MTCA B	2.7E+02	Tribal Child	--	6.8E+02	--	8.0E+02
591-78-6	2-Hexanone	--	3.2E+03	--	7.0E+03	--	2.2E+04	--	5.4E+03	--	9.2E+03	2.2E+04	MTCA B	3.2E+03	Tribal Child	--	4.7E+01	--	4.0E+01
75-09-2	Methylene Chloride	3.0E+02	1.2E+04	6.1E+01	2.5E+04	4.3E+02	7.8E+04	5.1E+02	2.0E+04	2.1E+02	3.3E+04	4.3E+02	MTCA B	6.1E+01	Tribal Adult	4.8E+00	1.1E+03	5.8E+00	4.8E+02
108-10-1	Methyl Isobutyl Ketone	--	1.9E+04	--	4.0E+04	--	1.2E+05	--	3.1E+04	--	5.3E+04	1.2E+05	MTCA B	1.9E+04	Tribal Child		2.0E+03	--	6.4E+02
91-20-3	Naphthalene	--	2.6E+01	--	5.6E+01	--	1.7E+02	--	4.3E+01	--	7.4E+01	1.7E+02	MTCA B	2.6E+01	Tribal Child	1.4E-01	6.2E+00	--	1.6E+02
100-42-5	Styrene	--	7.7E+04	--	1.7E+05	--	5.2E+05	--	1.3E+05	--	2.2E+05	5.2E+05	MTCA B	7.7E+04	Tribal Child	--	1.6E+03	--	1.6E+03
79-34-5	1,1,2,2-Tetrachloroethane	1.6E+00	5.5E+02	3.3E-01	1.2E+03	2.3E+00	3.7E+03	2.7E+00	9.3E+02	1.1E+00	1.6E+03	2.3E+00	MTCA B	3.3E-01	Tribal Adult	6.7E-02	7.3E+02	2.2E-01	1.6E+02
127-18-4	Tetrachloroethene (PCE)	1.0E-01	4.7E+01	2.1E-02	1.0E+02	1.4E-01	3.1E+02	1.7E-01	7.9E+01	7.2E-02	1.3E+02	1.4E-01	MTCA B	2.1E-02	Tribal Adult	1.1E-01	2.2E+02	--	8.0E+01
108-88-3	Toluene	--	1.3E+03	--	2.8E+03	--	8.7E+03	--	2.2E+03	--	3.7E+03	8.7E+03	MTCA B	1.3E+03	Tribal Child	--	2.3E+03	--	6.4E+02
71-55-6	1,1,1-Trichloroethane	--	4.6E+04	--	1.0E+05	--	3.1E+05	--	7.8E+04	--	1.3E+05	3.1E+05	MTCA B	4.6E+04	Tribal Child	--	9.1E+03	--	1.6E+04
79-00-5	1,1,2-Trichloroethane	1.1E+01	2.2E+02	2.3E+00	4.9E+02	1.6E+01	1.5E+03	1.9E+01	3.8E+02	8.2E+00	6.4E+02	1.6E+01	MTCA B	2.3E+00	Tribal Adult	--	1.5E+02	7.7E-01	3.2E+01
79-01-6	Trichloroethene (TCE)	2.5E+00	8.3E+00	5.1E-01	1.8E+01	3.6E+00	5.6E+01	4.2E+00	1.4E+01	1.8E+00	2.4E+01	3.6E+00	MTCA B	5.1E-01	Tribal Adult	2.0E+00	--	4.9E-01	2.4E+00
120-82-1	1,2,4-trichlorobenzene	6.5E-01	1.6E+01	1.3E-01	3.5E+01	9.3E-01	1.1E+02	1.1E+00	2.7E+01	4.6E-01	4.6E+01	9.3E-01	MTCA B	1.3E-01	Tribal Adult	2.3E+00	4.1E+00	1.5E+00	8.0E+01
75-69-4	Trichlorofluoromethane	--	6.9E+03	--	1.5E+04	--	4.6E+04	--	1.2E+04	--	2.0E+04	4.6E+04	MTCA B	6.9E+03	Tribal Child	--	1.3E+03	--	2.4E+03
76-13-1	1,1,2-Trichlorotrifluoroethane	--	--	--	--	--	--	--	--	--	--	--	--	--	--	1.10E+06	5.90E+04	--	2.4E+05
75-01-4	Vinyl chloride[7]	--	--	--	--	--	--	--	--	--	--	--	--	--	--	1.6E-02	7.2E+01	2.9E-02	2.4E+01
108-38-3	m-Xylene	--	1.3E+03	--	2.9E+03	--	8.9E+03	--	2.2E+03	--	3.8E+03	8.9E+03	MTCA B	1.3E+03	Tribal Child	--	1.2E+03	--	1.6E+03
95-47-6	o-Xylene	--	1.6E+03	--	3.4E+03	--	1.1E+04	--	2.7E+03	--	4.5E+03	1.1E+04	MTCA B	1.6E+03	Tribal Child	--	1.2E+03	--	1.6E+03
106-42-3	p-Xylene	--	1.6E+03	--	3.5E+03	--	1.1E+04	--	2.7E+03	--	4.5E+03	1.1E+04	MTCA B	1.6E+03	Tribal Child	--	1.2E+03	--	1.6E+03
10330-20-7	Xylenes (total)	--	1.5E+03	--	3.4E+03	--	1.0E+04	--	2.6E+03	--	4.4E+03	1.0E+04	MTCA B	1.5E+03	Tribal Child	--	2.0E+02	--	1.6E+03

Notes:

1 MTCA Method B Equations 730-1 and 730-2 modified to apply Tribal fish ingestion rates, body weights, and exposure duration (Ecology 2007). Refer to associated tables in this attachment for toxicity factors, bioconcentration factors, and exposure parameters.
2 MTCA Method B Equations 730-1 and 730-2 using default exposure assumptions. Refer to associated tables in this attachment for toxicity factors, bioconcentration factors, and exposure parameters.
3 MTCA Method B Equations 730-1 and 730-2 modified to apply Asian/Pacific Islander fish ingestion rates, body weights, and exposure duration (Ecology 2007). Refer to associated tables in this attachment for toxicity factors, bioconcentration factors, and exposure parameters.
4 EPA RSL, Residential Tapwaters; http://www.epa.gov/region9/superfund/prg/.
5 MTCA Method B Equations 720-1 and 720-2; groundwater cleanup levels to protect drinking water uses.
6 Vinyl chloride is considered mutagenic by EPA; its values are from the November 2010 EPA RSL Tables; http://www.epa.gov/reg3hwmd/risk/human/rb-concentration_table/Generic_Tables/pdf/resair_sl_table_run_NOVEMBER2010.pdf

Abbreviations:

BCF Bioconcentration factor
CAS Chemical abstract number
Ecology Washington State Deparment of Ecology
EPA U.S. Environmental Protection Agency
MTCA Model Toxics Control Act
RSL Regional screening level

Table A.2i
Groundwater Equations and Parameters

Surface Water to Fish Consumption by Humans: Non-cancer Effects

$$\text{Surface Water Cleanup or Screening Level (µg/L)} = \frac{(RfD_o \times ABW \times UCF1 \times UCF2 \times HQ \times AT)}{(BCF \times FCR \times FDF \times ED)}$$

RfD_o = Oral reference dose (mg/kg-day)
ABW = Average body weight (kg)
UCF1 = 1,000 g/mg
UCF2 = 1,000 g/L
HQ = Hazard quotient (unitless)
AT = Averaging time (years)
BCF = Bioconcentration factor (L/kg)
FCR = Fish consumption rate (g/day)
FDF = Fish diet fraction (unitless)
ED = Exposure duration (years)

Exposure Scenarios	RfD_o (mg/kg-day)	ABW (kg)	HQ (unitless)	AT (years)	BCF (L/kg)	FCR (g/day)	FDF (unitless)	ED (years)
MTCA Default[1]	<table>	70	1	30	<table>	54	0.5	30
MTCA Asian/Pacific Islander Child[2,3]	<table>	15	1	6	<table>	23	1	6
MTCA Asian/Pacific Islander Adult[2,3]	<table>	63	1	24	<table>	57.1	1	24
EPA Tribal Child[3,4]	<table>	15	1	6	<table>	38.8	1	6
EPA Tribal Adult[3,4]	<table>	81.8	1	64	<table>	97.1	1	64

Surface Water to Fish Consumption by Humans: Cancer

$$\text{Surface Water Cleanup or Screening Level (µg/L)} = \frac{(RISK \times ABW \times UCF1 \times UCF2 \times AT)}{(CPF_o \times BCF \times FCR \times FDF \times ED)}$$

Risk = Target excess individual lifetime cancer risk level (unitless)
ABW = Average body weight (kg)
UCF1 = 1,000 µg/mg
UCF2 = 1,000 g/L
AT = Averaging time (years)
CPF_o = Cancer potency factor (kg-day/mg)
BCF = Bioconcentration factor (L/kg)
FCR = Fish consumption rate (g/day)
FDF = Fish diet fraction (unitless)
ED = Exposure duration (years)

Exposure Scenarios	Risk (unitless)	ABW (kg)	AT (years)	CPF_o (kg-day/mg)	BCF (L/kg)	FCR (g/day)	FDF (unitless)	ED (years)
MTCA Default[1]	1.00E-06	70	75	<table>	<table>	54	0.5	30
MTCA Asian/Pacific Islander Child[2,3]	1.00E-06	15	70	<table>	<table>	23	1	6
MTCA Asian/Pacific Islander Adult[2,3]	1.00E-06	63	70	<table>	<table>	57.1	1	24
EPA Tribal Child[3,4]	1.00E-06	15	70	<table>	<table>	38.8	1	6
EPA Tribal Adult[3,4]	1.00E-06	81.8	70	<table>	<table>	97.1	1	64

Groundwater (as Drinking Water) Cleanup Levels: Non-cancer Effects

$$\text{Surface Water Cleanup or Screening Level (µg/L)} = \frac{(RfD_o \times ABW \times UCF \times HQ \times AT)}{(DWIR \times INH \times DWF \times ED)}$$

RfD_o = Oral reference dose (mg/kg-day)
ABW = Average body weight (kg)
UCF = 1,000 µg/mg
HQ = Hazard quotient (unitless)
AT = Averaging time (years)
DWIR = Drinking water ingestion rate (L/day)
INH = Inhalation correction factor (unitless)
DWF = Drinking water fraction (unitless)
ED = Exposure duration (years)

Exposure Scenarios	RfD_o (mg/kg-day)	ABW (kg)	HQ (unitless)	AT (years)	DWIR (L/day)	INH (unitless)	DWF (unitless)	ED (years)
MTCA Default[1]	<table>	16	1	6	1	2	1	6

Groundwater (as Drinking Water) Cleanup Levels: Cancer

$$\text{Surface Water Cleanup or Screening Level (µg/L)} = \frac{(RISK \times ABW \times UCF \times AT)}{(CPF_o \times DWIR \times INH \times DWF \times ED)}$$

Risk = Target excess individual lifetime cancer risk level (unitless)
ABW = Average body weight (kg)
UCF = 1000 µg/mg
AT = Averaging time (years)
CPF_o = Cancer potency factor (kg-day/mg)
DWIR = Drinking water ingestion rate (L/day)
INH = Inhalation correction factor (unitless)
DWF = Drinking water fraction (unitless)
ED = Exposure duration (years)

Exposure Scenarios	Risk (unitless)	ABW (kg)	AT (years)	CPF_o (kg-day/mg)	DWIR (L/day)	INH (unitless)	DWF (unitless)	ED (years)
MTCA Default[1]	1.00E-06	70	75	<table>	2	2	1	30

Notes:

<table> Indicates a chemical-specific factor is available in the associated tables of this attachment.
1 All parameters derived from Model Toxics Control Act (MTCA) WAC 173-340-730, equations 720-1 and 720-2.
2 Fish consumption rates derived from Washington State Department of Ecology (Ecology) 2009: MTCA Regulation Update Summary, Fish Consumption Rates for High Exposure Populations.
3 Fish consumption rates include both finfish and shellfish, and exclude salmon.
4 All parameters derived from U.S. Environmental Protection Agency (EPA) Region 10, 2007: Framework for Selecting and Using Tribal Fish and Shellfish Consumption Rates for Risk-based Decision Making.

Table A.2j
Cross-Media Factors

		Other Chemical Factors					Bioconcentration Factors							
		EPA R10					EPA R10		Ecology MTCA/CLARC		Others		Selected for Use[4]	
CAS Number	Chemical	GI Absorption Conversion Factor (unitless)	Dermal Absorption Fraction (unitless)	Volatilization Factor (m^3/kg)	Source For All Factors	(1/VF + 1/PEF)[1] (kg/m^3)	Water to Fish BCF[2] (L/kg)	Source	Water to Fish BCF[3] (L/kg)	Source	Water to Fish BCF (L/kg)	Source	Water to Fish BCF (L/kg)	Source
67-64-1	Acetone	1.0E+00	--	1.5E+04	EPA RSL 2010	6.8E-05	3.2E+00	HHRAP	--	--	--	--	3.2E+00	HHRAP
71-43-2	Benzene	1.0E+00	--	3.8E+03	EPA RSL 2010	2.6E-04	8.3E+00	HHRAP	5.2E+00	AWQC (Gold Book)	--	--	8.3E+00	HHRAP
78-93-3	2-Butanone (MEK)	1.0E+00	--	1.3E+04	EPA RSL 2010	7.6E-05	3.2E+00	HHRAP	--	--	--	--	3.2E+00	HHRAP
75-15-0	Carbon Disulfide	1.0E+00	--	1.3E+03	EPA RSL 2010	7.9E-04	9.9E+00	HHRAP	--	--	--	--	9.9E+00	HHRAP
56-23-5	Carbon Tetrachloride	1.0E+00	--	1.6E+03	EPA RSL 2010	6.2E-04	2.9E+01	HHRAP	1.9E+01	AWQC (Gold Book)	--	--	2.9E+01	HHRAP
108-90-7	Chlorobenzene	1.0E+00	--	6.9E+03	EPA RSL 2010	1.4E-04	2.9E+01	HHRAP	1.0E+01	AWQC (Gold Book)	--	--	2.9E+01	HHRAP
75-00-3	Chloroethane	1.0E+00	--	1.4E+03	EPA RSL 2010	7.2E-04	2.4E+00	HHRAP	--	--	--	--	2.4E+00	HHRAP
67-66-3	Chloroform	1.0E+00	--	2.8E+03	EPA RSL 2010	3.5E-04	3.2E+00	HHRAP	3.8E+00	AWQC (Gold Book)	--	--	3.2E+00	HHRAP
74-87-3	Chloromethane	1.0E+00	--	1.3E+03	EPA RSL 2010	7.9E-04	6.9E+00	HHRAP	3.8E+00	AWQC (Gold Book)	--	--	6.9E+00	HHRAP
106-43-4	4-Chlorotoluene	1.0E+00	--	7.9E+03	EPA RSL 2010	1.3E-04	2.3E+02	EPA DW	--	--	7.3E+01	OECD SIDS 2005	2.3E+02	EPA DW
95-50-1	1,2-Dichlorobenzene	1.0E+00	--	1.3E+04	EPA RSL 2010	7.9E-05	8.0E+01	HHRAP	5.6E+01	AWQC (Gold Book)	--	--	8.0E+01	HHRAP
106-46-7	1,4-Dichlorobenzene	1.0E+00	--	1.1E+04	EPA RSL 2010	8.9E-05	9.9E+01	HHRAP	5.6E+01	AWQC (Gold Book)	--	--	9.9E+01	HHRAP
75-34-3	1,1-Dichloroethane	1.0E+00	--	2.2E+03	EPA RSL 2010	4.5E-04	4.9E+00	HHRAP	--	--	--	--	4.9E+00	HHRAP
107-06-2	1,2-Dichloroethane	1.0E+00	--	4.9E+03	EPA RSL 2010	2.0E-04	2.9E+00	HHRAP	1.2E+00	AWQC (Gold Book)	--	--	2.9E+00	HHRAP
75-35-4	1,1-Dichloroethene	1.0E+00	--	1.2E+03	EPA RSL 2010	8.1E-04	8.3E+00	HHRAP	5.6E+00	AWQC (Gold Book)	--	--	8.3E+00	HHRAP
156-59-2	*cis* -1,2-Dichloroethene	1.0E+00	--	2.7E+03	EPA RSL 2010	3.7E-04	5.8E+00	HHRAP	--	--	--	--	5.8E+00	HHRAP
156-60-5	*trans* -1,2-Dichloroethene	1.0E+00	--	2.7E+03	EPA RSL 2010	3.7E-04	8.3E+00	HHRAP	1.6E+00	AWQC (Gold Book)	--	--	8.3E+00	HHRAP
78-87-5	1,2-Dichloropropane	1.0E+00	--	3.9E+03	EPA RSL 2010	2.6E-04	6.9E+00	HHRAP	4.1E+00	AWQC (Gold Book)	--	--	6.9E+00	HHRAP
100-41-4	Ethylbenzene	1.0E+00	--	6.1E+03	EPA RSL 2010	1.6E-04	4.9E+01	HHRAP	3.8E+01	AWQC (Gold Book)	--	--	4.9E+01	HHRAP
98-82-8	Isopropylbenzene(cumene)	1.0E+00	--	6.7E+03	EPA RSL 2010	1.5E-04	1.4E+02	HHRAP	--	--	--	--	1.4E+02	HHRAP
591-78-6	2-Hexanone	1.0E+00	--	1.4E+04	EPA RSL 2010	7.0E-05	6.0E-01	HHRAP	--	--	--	--	6.0E-01	HHRAP
75-09-2	Methylene Chloride	1.0E+00	--	2.4E+03	EPA RSL 2010	4.2E-04	2.0E+00	HHRAP	9.0E-01	AWQC (Gold Book)	--	--	2.0E+00	HHRAP
108-10-1	Methyl Isobutyl Ketone	1.0E+00	--	1.1E+04	EPA RSL 2010	8.8E-05	1.7E+00	HHRAP	--	--	--	--	1.7E+00	HHRAP
91-20-3	Naphthalene	1.0E+00	1.3E-01	5.0E+04	EPA RSL 2010	2.0E-05	6.9E+01	HHRAP	1.1E+01	AWQC (Gold Book)	3.0E+02	McCarthy 1985[8]	3.0E+02	McCarthy 1985[8]
100-42-5	Styrene	1.0E+00	--	1.0E+04	EPA RSL 2010	9.9E-05	1.0E+00	HHRAP	--	--	--	--	1.0E+00	HHRAP
79-34-5	1,1,2,2-Tetrachloroethane	1.0E+00	--	1.6E+04	EPA RSL 2010	6.1E-05	1.4E+01	HHRAP	5.0E+00	AWQC (Gold Book)	--	--	1.4E+01	HHRAP
127-18-4	Tetrachloroethene (PCE)	1.0E+00	--	2.5E+03	EPA RSL 2010	4.0E-04	8.3E+01	HHRAP	3.1E+01	AWQC (Gold Book)	--	--	8.3E+01	HHRAP
108-88-3	Toluene	1.0E+00	--	4.6E+03	EPA RSL 2010	2.2E-04	2.4E+01	HHRAP	1.1E+01	AWQC (Gold Book)	--	--	2.4E+01	HHRAP
71-55-6	1,1,1-Trichloroethane	1.0E+00	--	1.8E+03	EPA RSL 2010	5.6E-04	1.7E+01	HHRAP	5.6E+00	AWQC (Gold Book)	--	--	1.7E+01	HHRAP
79-00-5	1,1,2-Trichloroethane	1.0E+00	--	7.8E+03	EPA RSL 2010	1.3E-04	6.9E+00	HHRAP	4.5E+00	AWQC (Gold Book)	--	--	6.9E+00	HHRAP
79-01-6	Trichloroethene (TCE)	1.0E+00	--	2.4E+03	EPA RSL 2010	4.2E-04	1.4E+01	HHRAP	1.1E+01	AWQC (Gold Book)	--	--	1.4E+01	HHRAP
120-82-1	1,2,4-trichlorobenzene	1.0E+00	--	3.2E+04	EPA RSL 2010	3.1E-05	2.4E+02	HHRAP	1.1E+02	AWQC (Gold Book)	--	--	2.4E+02	HHRAP
75-69-4	Trichlorofluoromethane	1.0E+00	--	1.1E+03	EPA RSL 2010	9.0E-04	1.7E+01	HHRAP	--	--	--	--	1.7E+01	HHRAP
76-13-1	1,1,2-Trichlorotrifluoroethane	1.0E+00	--	1.4E+03	EPA RSL 2010	7.2E-04	--	--	--	--	--	--	--	--
75-01-4	Vinyl chloride	1.0E+00	--	1.0E+03	EPA RSL 2010	9.7E-04	--[7]	--	1.2E+00	AWQC (Gold Book)	--	--	--	--
108-38-3	m-Xylene	1.0E+00	--	5.9E+03	EPA RSL 2010	1.7E-04	5.8E+01	HHRAP	--	--	--	--	5.8E+01	HHRAP
95-47-6	o-Xylene	1.0E+00	--	7.0E+03	EPA RSL 2010	1.4E-04	4.9E+01	HHRAP	--	--	--	--	4.9E+01	HHRAP
106-42-3	p-Xylene	1.0E+00	--	6.0E+03	EPA RSL 2010	1.7E-04	4.9E+01	HHRAP	--	--	--	--	4.9E+01	HHRAP
10330-20-7	Xylenes (total)	1.0E+00	--	6.3E+03	EPA RSL 2010	1.6E-04	--	--	--	--	5.0E+01	Estimate	5.0E+01	Estimate

Table A.2j
Cross-Media Factors

		Henry's Law Constant[5]						Vapor Pressure at 25°C		Soil Organic Carbon to Water Partitioning Coefficient (K_{oc})								Soil to Water Partitioning Coefficient ($K_d = K_{oc} \times f_{oc}$)							
		EPA R10		Ecology MTCA/CLARC		Selected for Use		EPA R10		EPA R10		Ecology MTCA/CLARC		Others		Selected for Use		EPA R10		Ecology MTCA/CLARC		Others[6]		Selected for Use[6]	
CAS Number	Chemical	H_{cc} (unitless)	Source	H_{cc} (unitless)	Source	H_{cc} (unitless)	Source	VP (mm Hg)	Source	K_{oc} (L/kg)	Source	K_{oc} (L/kg)	Source	K_{oc} (L/kg)	Source	K_{oc} (L/kg)	Source	K_d (L/kg)	Source	K_d (L/kg)	Source	K_d (L/kg)	Source	K_d (L/kg)	Source
67-64-1	Acetone	1.4E-03	EPI Suite 2010	1.6E-03	EPA SSL 01	1.5E-03	Average	2.3E+02	EPI Suite 2010	2.4E+00	EPI Suite 2010	5.8E-01	EPA SSL 01	--	--	1.5E+00	Average	2.4E-03	RSL K_{oc}*0.001	5.8E-04	C K_{oc}*0.001	2.9E-02	K_{oc}*0.02	2.9E-02	K_{oc}*0.02
71-43-2	Benzene	2.3E-01	EPI Suite 2010	2.3E-01	EPA SSL 96	2.3E-01	Average	9.5E+01	EPI Suite 2010	1.5E+02	EPI Suite 2010	6.2E+01	EPA SSL 96	--	--	1.0E+02	Average	1.5E-01	RSL K_{oc}*0.001	6.2E-02	C K_{oc}*0.001	2.1E+00	K_{oc}*0.02	2.1E+00	K_{oc}*0.02
78-93-3	2-Butanone (MEK)	2.3E-03	EPI Suite 2010	--	--	2.3E-03	Average	9.1E+01	EPI Suite 2010	4.5E+00	EPI Suite 2010	--	--	--	--	4.5E+00	Average	4.5E-03	RSL K_{oc}*0.001	--	--	9.0E-02	K_{oc}*0.02	9.0E-02	K_{oc}*0.02
75-15-0	Carbon Disulfide	5.9E-01	EPI Suite 2010	1.2E+00	EPA SSL 01	9.1E-01	Average	3.6E+02	EPI Suite 2010	2.2E+01	EPI Suite 2010	4.6E+01	EPA SSL 01	--	--	3.4E+01	Average	2.2E-02	RSL K_{oc}*0.001	4.6E-02	C K_{oc}*0.001	6.7E-01	K_{oc}*0.02	6.7E-01	K_{oc}*0.02
56-23-5	Carbon Tetrachloride	1.1E+00	EPI Suite 2010	1.3E+00	EPA SSL 96	1.2E+00	Average	1.2E+02	EPI Suite 2010	4.4E+01	EPI Suite 2010	1.5E+02	EPA SSL 96	--	--	9.8E+01	Average	4.4E-02	RSL K_{oc}*0.001	1.5E-01	C K_{oc}*0.001	2.0E+00	K_{oc}*0.02	2.0E+00	K_{oc}*0.02
108-90-7	Chlorobenzene	1.3E-01	EPI Suite 2010	1.5E-01	EPA SSL 96	1.4E-01	Average	1.2E+01	EPI Suite 2010	2.3E+02	EPI Suite 2010	2.2E+02	EPA SSL 96	--	--	2.3E+02	Average	2.3E-01	RSL K_{oc}*0.001	2.2E-01	C K_{oc}*0.001	4.6E+00	K_{oc}*0.02	4.6E+00	K_{oc}*0.02
75-00-3	Chloroethane	4.5E-01	EPI Suite 2010	--	--	4.5E-01	Average	1.0E+03	EPI Suite 2010	2.2E+01	EPI Suite 2010	--	--	--	--	2.2E+01	Average	2.2E-02	RSL K_{oc}*0.001	--	--	4.3E-01	K_{oc}*0.02	4.3E-01	K_{oc}*0.02
67-66-3	Chloroform	1.5E-01	EPI Suite 2010	1.5E-01	EPA SSL 96	1.5E-01	Average	2.0E+02	EPI Suite 2010	3.2E+01	EPI Suite 2010	5.3E+01	EPA SSL 96	--	--	4.2E+01	Average	3.2E-02	RSL K_{oc}*0.001	5.3E-02	C K_{oc}*0.001	8.5E-01	K_{oc}*0.02	8.5E-01	K_{oc}*0.02
74-87-3	Chloromethane	3.6E-01	EPI Suite 2010	--	--	3.6E-01	Average	4.3E+03	EPI Suite 2010	1.3E+01	EPI Suite 2010	6.0E+00	EPA SSL 96	--	--	9.6E+00	Average	1.3E-02	RSL K_{oc}*0.001	6.0E-03	C K_{oc}*0.001	1.9E-01	K_{oc}*0.02	1.9E-01	K_{oc}*0.02
106-43-4	4-Chlorotoluene	1.8E-01	OECD SIDS 2005	--	--	1.8E-01	Average	3.5E+02	OECD SIDS 2005	3.8E+02	OECD SIDS 2005	--	--	--	--	3.8E+02	Average	3.8E-01	RSL K_{oc}*0.001	--	--	7.5E+00	K_{oc}*0.02	7.5E+00	K_{oc}*0.02
95-50-1	1,2-Dichlorobenzene	7.8E-02	EPI Suite 2010	7.8E-02	EPA SSL 96	7.8E-02	Average	1.4E+00	EPI Suite 2010	3.8E+02	EPI Suite 2010	3.8E+02	EPA SSL 96	--	--	3.8E+02	Average	3.8E-01	RSL K_{oc}*0.001	3.8E-01	C K_{oc}*0.001	7.6E+00	K_{oc}*0.02	7.6E+00	K_{oc}*0.02
106-46-7	1,4-Dichlorobenzene	9.9E-02	EPI Suite 2010	1.0E-01	EPA SSL 96	9.9E-02	Average	1.7E+00	EPI Suite 2010	3.8E+02	EPI Suite 2010	6.2E+02	EPA SSL 96	--	--	5.0E+02	Average	3.8E-01	RSL K_{oc}*0.001	6.2E-01	C K_{oc}*0.001	9.9E+00	K_{oc}*0.02	9.9E+00	K_{oc}*0.02
75-34-3	1,1-Dichloroethane	2.3E-01	EPI Suite 2010	2.3E-01	EPA SSL 96	2.3E-01	Average	2.3E+02	EPI Suite 2010	3.2E+01	EPI Suite 2010	5.3E+01	EPA SSL 96	--	--	4.2E+01	Average	3.2E-02	RSL K_{oc}*0.001	5.3E-02	C K_{oc}*0.001	8.5E-01	K_{oc}*0.02	8.5E-01	K_{oc}*0.02
107-06-2	1,2-Dichloroethane	4.8E-02	EPI Suite 2010	4.0E-02	EPA SSL 96	4.4E-02	Average	7.9E+01	EPI Suite 2010	4.0E+01	EPI Suite 2010	3.8E+01	EPA SSL 96	--	--	3.9E+01	Average	4.0E-02	RSL K_{oc}*0.001	3.8E-02	C K_{oc}*0.001	7.8E-01	K_{oc}*0.02	7.8E-01	K_{oc}*0.02
75-35-4	1,1-Dichloroethene	1.1E+00	EPI Suite 2010	1.1E+00	EPA SSL 96	1.1E+00	Average	6.0E+02	EPI Suite 2010	3.2E+01	EPI Suite 2010	6.5E+01	EPA SSL 96	--	--	4.8E+01	Average	3.2E-02	RSL K_{oc}*0.001	6.5E-02	C K_{oc}*0.001	9.7E-01	K_{oc}*0.02	9.7E-01	K_{oc}*0.02
156-59-2	*cis* -1,2-Dichloroethene	1.7E-01	EPI Suite 2010	1.7E-01	EPA SSL 01	1.7E-01	Average	2.0E+02	EPI Suite 2010	4.0E+01	EPI Suite 2010	3.6E+01	EPA SSL 01	--	--	3.8E+01	Average	4.0E-02	RSL K_{oc}*0.001	3.6E-02	C K_{oc}*0.001	7.5E-01	K_{oc}*0.02	7.5E-01	K_{oc}*0.02
156-60-5	*trans* -1,2-Dichloroethene	1.7E-01	EPI Suite 2010	3.9E-01	EPA SSL 96	2.8E-01	Average	3.3E+02	EPI Suite 2010	4.0E+01	EPI Suite 2010	3.8E+01	EPA SSL 96	--	--	3.9E+01	Average	4.0E-02	RSL K_{oc}*0.001	3.8E-02	C K_{oc}*0.001	7.8E-01	K_{oc}*0.02	7.8E-01	K_{oc}*0.02
78-87-5	1,2-Dichloropropane	1.2E-01	EPI Suite 2010	1.2E-01	EPA SSL 96	1.2E-01	Average	5.0E+01	EPA DW	6.1E+01	EPI Suite 2010	4.7E+01	EPA SSL 96	4.7E+01	EPA DW	5.2E+01	Average	6.1E-02	RSL K_{oc}*0.001	4.7E-02	C K_{oc}*0.001	1.0E+00	K_{oc}*0.02	1.0E+00	K_{oc}*0.02
100-41-4	Ethylbenzene	3.2E-01	EPI Suite 2010	3.2E-01	EPA SSL 96	3.2E-01	Average	9.6E+00	EPI Suite 2010	4.5E+02	EPI Suite 2010	2.0E+02	EPA SSL 96	--	--	3.3E+02	Average	4.5E-01	RSL K_{oc}*0.001	2.0E-01	C K_{oc}*0.001	6.5E+00	K_{oc}*0.02	6.5E+00	K_{oc}*0.02
98-82-8	Isopropylbenzene(cumene)	4.7E-01	EPI Suite 2010	--	--	4.7E-01	Average	4.5E+00	EPI Suite 2010	7.0E+02	EPI Suite 2010	--	--	--	--	7.0E+02	Average	7.0E-01	RSL K_{oc}*0.001	--	--	1.4E+01	K_{oc}*0.02	1.4E+01	K_{oc}*0.02
591-78-6	2-Hexanone	3.8E-03	EPI Suite 2010	--	--	3.8E-03	Average	1.2E+01	EPI Suite 2010	1.5E+01	EPI Suite 2010	--	--	--	--	1.5E+01	Average	1.5E-02	RSL K_{oc}*0.001	--	--	3.0E-01	K_{oc}*0.02	3.0E-01	K_{oc}*0.02
75-09-2	Methylene Chloride	1.3E-01	EPI Suite 2010	9.0E-02	EPA SSL 96	1.1E-01	Average	4.4E+02	EPI Suite 2010	2.2E+01	EPI Suite 2010	1.0E+01	EPA SSL 96	--	--	1.6E+01	Average	2.2E-02	RSL K_{oc}*0.001	1.0E-02	C K_{oc}*0.001	3.2E-01	K_{oc}*0.02	3.2E-01	K_{oc}*0.02
108-10-1	Methyl Isobutyl Ketone	5.6E-03	EPI Suite 2010	--	--	5.6E-03	Average	2.0E+01	EPI Suite 2010	1.3E+01	EPI Suite 2010	--	--	--	--	1.3E+01	Average	1.3E-02	RSL K_{oc}*0.001	--	--	2.5E-01	K_{oc}*0.02	2.5E-01	K_{oc}*0.02
91-20-3	Naphthalene	1.8E-02	EPI Suite 2010	2.0E-02	EPA SSL 96	1.9E-02	Average	8.5E-02	EPI Suite 2010	1.5E+03	ATSDR 2005	1.2E+03	EPA SSL 96	2.0E+03	Cal/EPA	1.6E+03	Average	1.5E+00	RSL K_{oc}*0.001	1.2E+00	C K_{oc}*0.001	3.2E+01	K_{oc}*0.02	3.2E+01	K_{oc}*0.02
100-42-5	Styrene	1.1E-01	EPI Suite 2010	1.1E-01	EPA SSL 96	1.1E-01	Average	6.4E+00	EPI Suite 2010	4.5E+02	EPI Suite 2010	9.1E+02	EPA SSL 96	--	--	6.8E+02	Average	4.5E-01	RSL K_{oc}*0.001	9.1E-01	C K_{oc}*0.001	1.4E+01	K_{oc}*0.02	1.4E+01	K_{oc}*0.02
79-34-5	1,1,2,2-Tetrachloroethane	1.5E-02	EPI Suite 2010	1.4E-02	EPA SSL 96	1.5E-02	Average	4.6E+00	EPI Suite 2010	9.5E+01	EPI Suite 2010	7.9E+01	EPA SSL 96	--	--	8.7E+01	Average	9.5E-02	RSL K_{oc}*0.001	7.9E-02	C K_{oc}*0.001	1.7E+00	K_{oc}*0.02	1.7E+00	K_{oc}*0.02
127-18-4	Tetrachloroethene (PCE)	7.2E-01	EPI Suite 2010	7.5E-01	EPA SSL 96	7.4E-01	Average	1.9E+01	EPI Suite 2010	9.5E+01	EPI Suite 2010	2.7E+02	EPA SSL 96	--	--	1.8E+02	Average	9.5E-02	RSL K_{oc}*0.001	2.7E-01	C K_{oc}*0.001	3.6E+00	K_{oc}*0.02	3.6E+00	K_{oc}*0.02
108-88-3	Toluene	2.7E-01	EPI Suite 2010	2.7E-01	EPA SSL 96	2.7E-01	Average	2.8E+01	EPI Suite 2010	2.3E+02	EPI Suite 2010	1.4E+02	EPA SSL 96	--	--	1.9E+02	Average	2.3E-01	RSL K_{oc}*0.001	1.4E-01	C K_{oc}*0.001	3.7E+00	K_{oc}*0.02	3.7E+00	K_{oc}*0.02
71-55-6	1,1,1-Trichloroethane	7.0E-01	EPI Suite 2010	7.1E-01	EPA SSL 96	7.0E-01	Average	1.2E+02	EPI Suite 2010	4.4E+01	EPI Suite 2010	1.4E+02	EPA SSL 96	--	--	8.9E+01	Average	4.4E-02	RSL K_{oc}*0.001	1.4E-01	C K_{oc}*0.001	1.8E+00	K_{oc}*0.02	1.8E+00	K_{oc}*0.02
79-00-5	1,1,2-Trichloroethane	3.4E-02	EPI Suite 2010	3.7E-02	EPA SSL 96	3.6E-02	Average	2.3E+01	EPI Suite 2010	6.1E+01	EPI Suite 2010	7.5E+01	EPA SSL 96	--	--	6.8E+01	Average	6.1E-02	RSL K_{oc}*0.001	7.5E-02	C K_{oc}*0.001	1.4E+00	K_{oc}*0.02	1.4E+00	K_{oc}*0.02
79-01-6	Trichloroethene (TCE)	4.0E-01	EPI Suite 2010	4.2E-01	EPA SSL 96	4.1E-01	Average	6.9E+01	EPI Suite 2010	6.1E+01	EPI Suite 2010	9.4E+01	EPA SSL 96	--	--	7.7E+01	Average	6.1E-02	RSL K_{oc}*0.001	9.4E-02	C K_{oc}*0.001	1.5E+00	K_{oc}*0.02	1.5E+00	K_{oc}*0.02
120-82-1	1,2,4-trichlorobenzene	5.8E-02	EPI Suite 2010	5.8E-02	EPA SSL 96	5.8E-02	Average	4.6E-01	EPI Suite 2010	1.4E+03	Kd/0.001	1.7E+03	EPA SSL 96	--	--	1.5E+03	Average	1.4E+00	RSL K_{oc}*0.001	1.7E+00	C K_{oc}*0.001	3.0E+01	K_{oc}*0.02	3.0E+01	K_{oc}*0.02
75-69-4	Trichlorofluoromethane	4.0E+00	EPI Suite 2010	--	--	4.0E+00	Average	8.0E+02	EPI Suite 2010	4.4E+01	EPI Suite 2010	--	--	--	--	4.4E+01	Average	4.4E-02	RSL K_{oc}*0.001	--	--	8.8E-01	K_{oc}*0.02	8.8E-01	K_{oc}*0.02
76-13-1	1,1,2-Trichlorotrifluoroethane	2.2E+01	EPI Suite 2010	--	--	2.2E+01	Average	3.6E+02	EPI Suite 2010	2.0E+02	EPI Suite 2010	--	--	--	--	2.0E+02	Average	2.0E-01	RSL K_{oc}*0.001	--	--	3.9E+00	K_{oc}*0.02	3.9E+00	K_{oc}*0.02
75-01-4	Vinyl chloride	1.1E+00	EPI Suite 2010	1.1E+00	EPA SSL 01	1.1E+00	Average	3.0E+03	EPI Suite 2010	2.2E+01	EPI Suite 2010	1.9E+01	EPA SSL 01	--	--	2.0E+01	Average	2.2E-02	RSL K_{oc}*0.001	1.9E-02	C K_{oc}*0.001	4.0E-01	K_{oc}*0.02	4.0E-01	K_{oc}*0.02
108-38-3	m-Xylene	2.8E-01	EPI Suite 2010	3.0E-01	EPA SSL 96	2.9E-01	Average	8.3E+00	EPI Suite 2010	3.8E+02	EPI Suite 2010	2.0E+02	EPA SSL 96	--	--	2.9E+02	Average	3.8E-01	RSL K_{oc}*0.001	2.0E-01	C K_{oc}*0.001	5.7E+00	K_{oc}*0.02	5.7E+00	K_{oc}*0.02
95-47-6	o-Xylene	2.9E-01	EPI Suite 2010	2.1E-01	EPA SSL 96	2.5E-01	Average	6.6E+00	EPI Suite 2010	3.8E+02	EPI Suite 2010	2.4E+02	EPA SSL 96	--	--	3.1E+02	Average	3.8E-01	RSL K_{oc}*0.001	2.4E-01	C K_{oc}*0.001	6.2E+00	K_{oc}*0.02	6.2E+00	K_{oc}*0.02
106-42-3	p-Xylene	2.1E-01	EPI Suite 2010	3.1E-01	EPA SSL 96	2.6E-01	Average	8.8E+00	EPI Suite 2010	3.8E+02	EPI Suite 2010	3.1E+02	EPA SSL 96	--	--	3.5E+02	Average	3.8E-01	RSL K_{oc}*0.001	3.1E-01	C K_{oc}*0.001	6.9E+00	K_{oc}*0.02	6.9E+00	K_{oc}*0.02
10330-20-7	Xylenes (total)	2.1E-01	EPI Suite 2010	2.8E-01	TPH WG 97	2.5E-01	Average	9.0E+00	EPI Suite 2010	3.8E+02	EPI Suite 2010	2.3E+02	TPH WG 97	--	--	3.1E+02	Average	3.8E-01	RSL K_{oc}*0.001	2.3E-01	C K_{oc}*0.001	6.2E+00	K_{oc}*0.02	6.2E+00	K_{oc}*0.02

Notes:

1 If VF is not available (i.e., is presented as "--" in table), this term simplifies to one divided by the particulate emission factor (1/PEF).
2 BCFs derived from Meylan, et al. ,1999 (in EPA Human Health Risk Assessment Protocol for Hazardous Waste Combustion Facilities [HHRAP] Guidance, 2005, EPA520-R-05-006).
3 BCFs derived from CLARC database, originally sourced from EPA Quality Criteria for Water (AWQC Gold Book 1986), EPA 440/5-86-001.
4 In general, the more recent BCFs are from the HHRAP summary; many of these are calculated using the method of Meylan, et al. 1999 (refer to Note 1); emperical values from other studies may be more appropirate for specific sites.
5 From: https://fortress.wa.gov/ecy/clarc/FocusSheets/Physical&ChemicalParameters.htm
6 A site-specific f_{oc} was developed for Boeing Plant 2 using areas with no or limited organic contamination to represent the actual fraction of organic carbon present in the alluvial soils; this value is 0.02.
7 Vinyl chloride has never been detected in fish/shellfish in any known study; therefore, the calculated BCF has been rejected due to insufficient data to confirm vinyl chloride uptake into seafood.
8 McCarthy, John F. and Braulio D. Jimenez. 1985. Reduction in Bioavailibility to Bluegills of Polycylic Aromatic Hydrocarbons Bound to Dissolved Humic Material. Environmental Toxicology and Chemistry Vol. 4: 511-521.

When literature values of Henry's Law Constant were given with unit specific values, they were converted to the unitless Henry's Law Constant provided in the table above by division with the unit-specific quantity RT. Conversion factors and their units are provided below:

If original units were given in:	Use RT with value of:
atms-m^3/mol	2.4E-02 atms-m^3/mol
Pa-m^3/mol	2.5E+03 Pa-m^3/mol

Abbreviations:

ATSDR Agency for Toxic Substances and Disease Registry
AWQC Ambient Water Quality Criteria
Cal/EPA California Environmental Protection Agency
EPI Suite EPA Estimation Program Interface Suite located online at http://www.epa.gov/oppt/exposure/pubs/episuite.htm
EPA DW Chemical FactSheets from EPA Office of Drinking Water (dates varies)
EPA SSG 96 EPA Soil Screening Guidance: Technical Background Document (1996)
EPA SSL 01 EPA Guidance for Developing Soil Screening Levels Table C-1 (1996/2001 Update)
HEAST Health Effects Assessment Summary Tables
IRIS Integrated Risk Information System
NJEPA New Jersey Environmental Protection Agency
OECD SIDS 2005 Organization of Economic Cooperation and Development Screening Information Data Set located online at http://www.dow.com/productsafety/chemical/oecd.htm
TPH WG 97 TPH Criteria Working Group Series Volume 3 (GWG, 1997)
VF Volatilization factor

Table A.2k
Toxicological Factors

		EPA R10[1]												Ecology[2]									
		Oral/Ingestion Toxicity Factors				Dermal Toxicity Factors[3]				Inhalation Toxicity Factors				Oral/Ingestion Toxicity Factors				Dermal Toxicity Factors[4]				Inhalation Toxicity Factors	
CAS Number	Constituent	Cancer Slope Factor (CSF_o) (kg-day/mg)	Source	Reference Dose (RfD_o) (mg/kg-day)	Source	Cancer Slope Factor (CSF_d) (kg-day/mg)	Source	Reference Dose (RfD_d) (mg/kg-day)	Source	Inhalation Unit Risk (IUR) ($m^3/\mu g$)	Source	Reference Concentration (RfC_i) (mg/m^3)	Source	Cancer Potency Factor (CPF_o) (kg-day/mg)	Source	Reference Dose (RfD_o) (mg/kg-day)	Source	Cancer Potency Factor (CPF_d) (kg-day/mg)	Source	Reference Dose (RfD_d) (mg/kg-day)	Source	Cancer Potency Factor (CPF_i) (kg-day/mg)	Source
67-64-1	Acetone	--	--	9.0E-01	IRIS	--	--	9.0E-01	RfD_o*GI-abs	--	--	3.1E+01	IRIS	--	--	9.0E-01	IRIS	--	--	7.2E-01	RfD_o*GI-abs	--	--
71-43-2	Benzene	5.5E-02	IRIS	4.0E-03	IRIS	5.5E-02	CSF_o/GI-abs	4.0E-03	RfD_o*GI-abs	7.8E-06	IRIS	3.0E-02	IRIS	5.5E-02	IRIS	4.0E-03	IRIS	6.9E-02	CPF_o/GI-abs	3.2E-03	RfD_o*GI-abs	2.7E-02	HEAST
78-93-3	2-Butanone (MEK)	--	--	6.0E-01	IRIS	--	--	6.0E-01	RfD_o*GI-abs	--	--	5.0E+00	IRIS	--	--	6.0E-01	IRIS	--	--	4.8E-01	RfD_o*GI-abs	--	--
75-15-0	Carbon Disulfide	--	--	1.0E-01	IRIS	--	--	1.0E-01	RfD_o*GI-abs	--	--	7.0E-01	IRIS	--	--	1.0E-01	IRIS	--	--	8.0E-02	RfD_o*GI-abs	--	--
56-23-5	Carbon Tetrachloride	7.0E-02	IRIS	4.0E-03	IRIS	7.0E-02	CSF_o/GI-abs	4.0E-03	RfD_o*GI-abs	6.0E-06	IRIS	1.0E-01	IRIS	7.0E-02	IRIS	4.0E-03	IRIS	8.8E-02	CPF_o/GI-abs	3.2E-03	RfD_o*GI-abs	2.1E-02	HEAST
108-90-7	Chlorobenzene	--	--	2.0E-02	IRIS	--	--	2.0E-02	RfD_o*GI-abs	--	--	5.0E-02	HEAST	--	--	2.0E-02	IRIS	--	--	1.6E-02	RfD_o*GI-abs	--	--
75-00-3	Chloroethane	--	--	--	--	--	--	--	RfD_o*GI-abs	--	--	1.0E+01	IRIS	--	--	--	--	--	--	--	--	--	--
67-66-3	Chloroform	3.1E-02	Cal/EPA	1.0E-02	IRIS	3.1E-02	CSF_o/GI-abs	1.0E-02	RfD_o*GI-abs	2.3E-05	IRIS	9.8E-02	ATSDR	--	--	1.0E-02	IRIS	--	--	8.0E-03	RfD_o*GI-abs	8.1E-02	HEAST
74-87-3	Chloromethane	--	--	--	--	--	--	--	RfD_o*GI-abs	--	--	9.0E-02	IRIS	--	--	--	--	--	--	--	--	6.3E-03	HEAST
106-43-4	4-Chlorotoluene	--	--	--	--	--	--	--	RfD_o*GI-abs	--	--	--	--	--	--	--	--	--	--	--	--	--	--
95-50-1	1,2-Dichlorobenzene	--	--	9.0E-02	IRIS	--	--	9.0E-02	RfD_o*GI-abs	--	--	2.0E-01	HEAST	--	--	9.0E-02	IRIS	--	--	7.2E-02	RfD_o*GI-abs	--	--
106-46-7	1,4-Dichlorobenzene	5.4E-03	Cal/EPA	7.0E-02	ATSDR	5.4E-03	--	7.0E-02	RfD_o*GI-abs	1.1E-05	Cal/EPA	8.0E-01	IRIS	--	--	--	--	--	--	--	--	--	--
75-34-3	1,1-Dichloroethane	5.7E-03	Cal/EPA	2.0E-01	PPRTV	5.7E-03	CSF_o/GI-abs	2.0E-01	RfD_o*GI-abs	1.6E-06	Cal/EPA	--	--	--	--	2.0E-01	IRIS	--	--	1.6E-01	RfD_o*GI-abs	--	--
107-06-2	1,2-Dichloroethane	9.1E-02	IRIS	--	--	9.1E-02	CSF_o/GI-abs	--	RfD_o*GI-abs	2.6E-05	IRIS	2.4E+00	EPA RSL[7]	9.1E-02	IRIS	2.0E-02	IRIS	1.1E-01	CPF_o/GI-abs	1.6E-02	RfD_o*GI-abs	9.1E-02	HEAST
75-35-4	1,1-Dichloroethene	--	--	5.0E-02	IRIS	--	--	5.0E-02	RfD_o*GI-abs	--	--	2.0E-01	IRIS	--		5.0E-02	IRIS	--	--	4.0E-02	RfD_o*GI-abs	--	--
156-59-2	*cis* -1,2-Dichloroethene	--	--	2.0E-03	IRIS	--	--	2.0E-03	RfD_o*GI-abs	--	--	--	--	--	--	2.0E-03	IRIS	--	--	1.6E-03	RfD_o*GI-abs	--	--
156-60-5	*trans* -1,2-Dichloroethene	--	--	2.0E-02	IRIS	--	--	2.0E-02	RfD_o*GI-abs	--	--	--	--	--	--	2.0E-02	IRIS	--	--	1.6E-02	RfD_o*GI-abs	--	--
78-87-5	1,2-Dichloropropane	3.6E-02	Cal/EPA	9.0E-02	ATSDR	3.6E-02	CSF_o/GI-abs	9.0E-02	RfD_o*GI-abs	1.0E-05	Cal/EPA	4.0E-03	IRIS	--	--	--	--	--	--	--	--	--	--
100-41-4	Ethylbenzene	1.1E-02	Cal/EPA	1.0E-01	IRIS	1.1E-02	CSF_o/GI-abs	1.0E-01	RfD_o*GI-abs	2.5E-06	Cal/EPA	1.0E+00	IRIS	--	--	1.0E-01	IRIS	--	--	8.0E-02	RfD_o*GI-abs	--	--
98-82-8	Isopropylbenzene(cumene)	--	--	1.0E-01	IRIS	--	--	1.0E-01	RfD_o*GI-abs	--	--	4.0E-01	IRIS	--	--	1.0E-01	IRIS	--	--	8.0E-02	RfD_o*GI-abs	--	--
591-78-6	2-Hexanone	--	--	5.0E-03	IRIS	--	--	5.0E-03	RfD_o*GI-abs	--	--	3.0E-02	IRIS	--	--	5.0E-03	EPA RSL	--	--	4.0E-03	RfD_o*GI-abs	--	--
75-09-2	Methylene Chloride	7.5E-03	IRIS	6.0E-02	IRIS	7.5E-03	CSF_o/GI-abs	6.0E-02	RfD_o*GI-abs	4.7E-07	IRIS	1.0E+00	ATSDR	7.5E-03	IRIS	6.0E-02	IRIS	9.4E-03	CPF_o/GI-abs	4.8E-02	RfD_o*GI-abs	1.6E-03	HEAST
108-10-1	Methyl Isobutyl Ketone	--	--	8.0E-02	HEAST	--	--	8.0E-02	RfD_o*GI-abs	--	--	3.0E+00	IRIS	--	--	8.0E-02	Heast	--	--	6.4E-02	RfD_o*GI-abs	--	--
91-20-3	Naphthalene	--	--	2.0E-02	IRIS	--	--	2.0E-02	RfD_o*GI-abs	3.4E-05	Cal/EPA	3.0E-03	IRIS	--	--	2.0E-02	IRIS	--	--	1.6E-02	RfD_o*GI-abs	--	--
100-42-5	Styrene	--	--	2.0E-01	IRIS	--	--	2.0E-01	RfD_o*GI-abs	--	--	1.0E+00	IRIS	--	--	2.0E-01	IRIS	--	--	1.6E-01	RfD_o*GI-abs	--	--
79-34-5	1,1,2,2-Tetrachloroethane	2.0E-01	IRIS	2.0E-02	IRIS	2.0E-01	CSF_o/GI-abs	2.0E-02	RfD_o*GI-abs	5.8E-05	IRIS	--	--	2.0E-01	IRIS	2.0E-02	IRIS	2.5E-01	CPF_o/GI-abs	1.6E-02	RfD_o*GI-abs	--	--
127-18-4	Tetrachloroethene (PCE)	5.4E-01	Cal/EPA	1.0E-02	IRIS	5.4E-01	CSF_o/GI-abs	1.0E-02	RfD_o*GI-abs	5.9E-06	IRIS	2.3E+00	ATSDR	--	--	1.0E-02	IRIS	--	--	8.0E-03	RfD_o*GI-abs	--	--
108-88-3	Toluene	--	--	8.0E-02	IRIS	--	--	8.0E-02	RfD_o*GI-abs	--	--	5.0E+00	IRIS	--	--	8.0E-02	IRIS	--	--	6.4E-02	RfD_o*GI-abs	--	--
71-55-6	1,1,1-Trichloroethane	--	--	2.0E+00	IRIS	--	--	2.0E+00	RfD_o*GI-abs	--	--	5.0E+00	IRIS	--	--	2.0E+00	IRIS	--	--	1.6E+00	RfD_o*GI-abs	--	--
79-00-5	1,1,2-Trichloroethane	5.7E-02	IRIS	4.0E-03	IRIS	5.7E-02	CSF_o/GI-abs	4.0E-03	RfD_o*GI-abs	1.6E-05	IRIS	--	--	5.7E-02	IRIS	4.0E-03	IRIS	7.1E-02	CPF_o/GI-abs	3.2E-03	RfD_o*GI-abs	5.6E-02	HEAST
79-01-6	Trichloroethene (TCE)[5]	1.3E-01	EPA R10	3.0E-04	EPA R10	1.3E-01	CSF_o/GI-abs	3.0E-04	RfD_o*GI-abs	2.0E-05	EPA R10	1.0E+01	EPA R10	8.9E-02	EPA R10	3.0E-04	EPA R10	1.1E-01	CPF_o/GI-abs	2.4E-04	RfD_o*GI-abs	--	--
120-82-1	1,2,4-trichlorobenzene	2.9E-02	IRIS	1.0E-02	IRIS	2.9E-02	CSF_o/GI-abs	1.0E-02	RfD_o*GI-abs	--	--	--	--	2.9E-02	IRIS	1.0E-02	IRIS	3.6E-02	CPF_o/GI-abs	8.0E-03	RfD_o*GI-abs	--	--
75-69-4	Trichlorofluoromethane	--	--	3.0E-01	IRIS	--	--	3.0E-01	RfD_o*GI-abs	--	--	7.0E-01	Heast	--	--	3.0E-01	IRIS	--	--	2.4E-01	RfD_o*GI-abs	--	--
76-13-1	1,1,2-Trichlorotrifluoroethane	--	--	3.0E+01	IRIS	--	--	3.0E+01	RfD_o*GI-abs	--	--	3.0E-01	Heast	--	--	3.0E+01	IRIS	--	--	2.4E+01	RfD_o*GI-abs	--	--
75-01-4	Vinyl chloride[6]	1.5E+00	EPA R10	3.0E-03	IRIS	1.5E+00	CSF_o/GI-abs	3.0E-03	RfD_o*GI-abs	8.8E-06	EPA R10	1.0E-01	IRIS	1.5E+00	EPA R10	3.0E-03	IRIS	1.9E+00	CPF_o/GI-abs	2.4E-03	RfD_o*GI-abs	3.1E-02	EPA R10
108-38-3	m-Xylene	--	--	2.0E-01	IRIS	--	--	2.0E-01	RfD_o*GI-abs	--	--	7.0E-01	IRIS	--	--	2.0E-01	IRIS	--	--	1.6E-01	RfD_o*GI-abs	--	--
95-47-6	o-Xylene	--	--	2.0E-01	IRIS	--	--	2.0E-01	RfD_o*GI-abs	--	--	7.0E-01	Cal/EPA	--	--	2.0E-01	IRIS	--	--	1.6E-01	RfD_o*GI-abs	--	--
106-42-3	p-Xylene	--	--	2.0E-01	IRIS	--	--	2.0E-01	RfD_o*GI-abs	--	--	7.0E-01	Cal/EPA	--	--	2.0E-01	IRIS	--	--	1.6E-01	RfD_o*GI-abs	--	--
10330-20-7	Xylenes (total)	--	--	2.0E-01	IRIS	--	--	2.0E-01	RfD_o*GI-abs	--	--	1.0E-01	IRIS	--	--	2.0E-01	IRIS	--	--	1.6E-01	RfD_o*GI-abs	--	--

Notes:

1 Toxicity factors are from the November 2010 EPA RSL Tables unless otherwise noted.

2 All toxicity factors derived from the CLARC database effective January 30, 2011 unless more recent toxicity factors were available in IRIS; MTCA Air Equation modified to use RfC_i from EPA, rather than RfD_i from CLARC.

3 EPA dermal toxicity factors are calculated based on the oral toxicity factors as follows: $CSF_d = CSF_o$/GI-abs; $RfD_d = RfD_o$ x GI-abs. GI-abs is the gastrointestinal absorption conversion factor, which is equal to 1.0 except where otherwise specified (usually only for metals).

4 MTCA dermal toxicity factors are calculated based on the oral toxicity factors as follows: $CSF_d = CSF_o$/GI-abs; $RfD_d = RfD_d$ x GI-abs. GI-abs is the gastrointestinal absorption conversion factor, which is equal to 0.8 for VOCs (see Equations 740-4 and 740-5).

5 Ecology has established toxicity factors for TCE until such time as new factors are available in IRIS; refer to for details: https://fortress.wa.gov/ecy/clarc/FocusSheets/TCE PCE Oct 2004 Final.pdf. EPA R10 has accepted this approach for this site.

6 Ecology has established the following "rule" for dealing with the mutagenic effects of vinyl chloride; refer to for details: https://fortress.wa.gov/ecy/clarc/FocusSheets/VinylChloride.pdf. EPA R10 has accepted this approach for this site.

7 IRIS does not list an RfC_i for 1,2-dichloroethane, which is confirmed by ATSDR. Cannot confirm this value other than it is reported on the November 2010 update of the EPA RSLs and lists ATSDR as the source on the EPA RSL table.

Abbreviations:

ATSDR Agency for Toxic Substances and Disease Registry
Cal/EPA California Environmental Protection Agency
Ecology Washington State Department of Ecology
EPA U.S. Environmental Protection Agency
RSL Regional screening level
EPA RSL 2010 Regional Screening Levels, November 2010; https://www.epa.gov/region9/superfund/prg/.
HEAST Health Effects Assessment Summary Tables
IRIS Integrated Risk Information System
MTCA Model Toxics Control Act
NJEPA New Jersey Environmental Protection Agency
R10 Region 10
VOC Volatile organic compound

Table A.3a
Soil Standards, Criteria, and Risk-based Calculations

		Residential			Industrial			Sediment Protection	Groundwater Protection	EPA Proposed Soil TMCL to Protect All Pathways	
		EPA		Ecology	EPA Modified		Ecology	Ecology	Ecology		
CAS Number	Chemical[1]	EPA RSL Residential Includes Ingestion, Dermal, and Inhalation[2] (mg/kg)	TSCA High Occupancy No Cap[3] (mg/kg)	MTCA Method B Unrestricted Land Use Includes CLARC Toxicity Factors[4] (mg/kg)	EPA RSL Industrial Includes Ingestion, Dermal, and Inhalation[5] (mg/kg)	TSCA High Occupancy With Cap[3] (mg/kg)	MTCA Method C Industrial Land Use Includes CLARC Toxicity Factors[4] (mg/kg)	SMS Sediment Quality Standards[6] (mg/kg dry weight)	Soil Level to Protect Groundwater Using Three-phase Model[7] (mg/kg)	(mg/kg)	Exposure Pathway Basis of TMCL
Semivolatile Organic Compounds (SVOCs)											
83-32-9	Acenaphthene	3.4E+03	--	4.8E+03	2.1E+04	--	2.1E+05	5.0E-01	2.3E+02	2.3E+02	Soil to protect groundwater for Tribal seafood.
208-96-8	Acenaphthylene	--	--	--	--	--	--	1.3E+00	--	--	SMS SQS may be appropriate for bank soils.
120-12-7	Anthracene	1.7E+04	--	2.4E+04	1.1E+05	--	1.1E+06	9.6E-01	1.6E+03	1.6E+03	Soil to protect groundwater for Tribal seafood.
191-24-2	Benzo(g,h,i)perylene	--	--	--	--	--	--	--	--	--	--
117-81-7	Bis(2-ethylhexyl)phthalate	3.5E+01	--	7.1E+01	7.7E+02	--	9.4E+03	1.3E+00	5.7E+01	3.5E+01	EPA RSL Residential Including Ingestion, Dermal, and Inhalation.
85-68-7	Butylbenzyl phthalate	2.6E+02	--	5.3E+02	5.7E+03	--	6.9E+04	6.3E-02	1.7E+00	1.7E+00	Soil to protect groundwater for Tribal seafood.
59-50-7	4-chloro-3-methylphenol	6.1E+03	--	8.0E+03	3.8E+04	--	3.5E+05	--	7.4E+02	7.4E+02	Surrogate Value: soil to protect groundwater for drinking water use
132-64-9	*Dibenzofuran [8]*	--	--	*0.0E+00*	--	--	*0.0E+00*	*5.4E-01*	--	*0.0E+00*	*Semi-quantitative: soil to protect groundwater for drinking water use.*
84-74-2	Di-n-butylphthalate	6.1E+03	--	8.0E+03	3.8E+04	--	3.5E+05	1.4E+00	2.6E+01	2.6E+01	Soil to protect groundwater for Tribal seafood.
84-66-2	Diethylphthalate	4.9E+04	--	6.4E+04	3.1E+05	--	2.8E+06	2.0E-01	7.6E+02	7.6E+02	Soil to protect groundwater for Tribal seafood.
105-67-9	2,4-Dimethylphenol	1.2E+03	--	1.6E+03	7.7E+03	--	7.0E+04	2.9E-02	9.5E+01	9.5E+01	Soil to protect groundwater for Tribal seafood.
131-11-3	Dimethylphthalate	--	--	--	--	--	--	7.1E-02	--	--	SMS SQS may be appropriate for bank soils.
117-84-0	Di-n-octyl phthalate	--	--	--	--	--	--	6.2E+00	--	--	SMS SQS may be appropriate for bank soils.
206-44-0	Fluoranthene	2.3E+03	--	3.2E+03	1.4E+04	--	1.4E+05	1.7E+00	2.3E+02	2.3E+02	Soil to protect groundwater for Tribal seafood.
86-73-7	Fluorene	2.3E+03	--	3.2E+03	1.4E+04	--	1.4E+05	5.4E-01	1.5E+02	1.5E+02	Soil to protect groundwater for Tribal seafood.
7440-62-2	1-Methylnaphthalene	1.6E+01	--	3.4E+01	3.5E+02	--	4.5E+03	1.6E+01	--	1.6E+01	EPA RSL Residential Including Ingestion, Dermal, and Inhalation.
91-57-6	2-Methylnaphthalene	2.3E+02	--	3.2E+02	1.4E+03	--	1.4E+04	6.7E-01	--	2.3E+02	EPA RSL Residential Including Ingestion, Dermal, and Inhalation.
95-48-7	2-Methylphenol (o-cresol)	3.1E+03	--	4.0E+03	1.9E+04	--	1.8E+05	6.3E-02	2.5E+02	2.5E+02	Soil to protect groundwater for Tribal seafood.
106-44-5	4-Methylphenol (p-cresol)	3.1E+02	--	4.0E+02	1.9E+03	--	1.8E+04	6.7E-01	4.1E+01	4.1E+01	Soil to protect groundwater for Tribal seafood.
91-20-3	Naphthalene	3.6E+00	--	1.6E+03	1.8E+02	--	7.0E+04	2.1E+00	1.6E+01	3.6E+00	EPA RSL Residential Including Ingestion, Dermal, and Inhalation.
85-01-8	Phenanthrene	--	--	--	--	--	--	1.5E+00	--	--	SMS SQS may be appropriate for bank soils.
108-95-2	Phenol	1.8E+04	--	2.4E+04	1.2E+05	--	1.1E+06	4.2E-01	1.9E+03	1.9E+03	Soil to protect groundwater for Tribal seafood.
129-00-0	Pyrene	1.7E+03	--	2.4E+03	1.1E+04	--	1.1E+05	2.6E+00	2.4E+02	2.4E+02	Soil to protect groundwater for Tribal seafood.
Polychlorinated Biphenyls (PCBs)											
53469-21-9	Aroclor 1016/1242	2.2E-01	--	5.0E-01	4.9E+00	--	6.6E+01	--	7.2E-04	7.2E-04	Soil to protect groundwater for Tribal seafood.
12672-29-6	Aroclor 1248	2.2E-01	--	5.0E-01	4.9E+00	--	6.6E+01	--	--	2.2E-01	EPA RSL Residential Including Ingestion, Dermal, and Inhalation.
11097-69-1	Aroclor 1254	2.2E-01	--	5.0E-01	4.9E+00	--	6.6E+01	--	2.9E-04	2.9E-04	Soil to protect groundwater for Tribal seafood.
37324-23-2	Aroclor 1260	2.2E-01	--	5.0E-01	4.9E+00	--	6.6E+01	--	5.4E-03	5.4E-03	Soil to protect groundwater for Tribal seafood.
1336-36-3	Total PCBs	2.2E-01	1.0E+00	5.0E-01	4.9E+00	1.0E+01	6.6E+01	1.3E-01	1.8E-03	1.8E-03	Soil to protect groundwater for Tribal seafood.

Notes:

1 Not all chemicals are constituents needing TMCLs at Boeing Plant 2.
2 EPA RSL calculations using EPA toxicity factors and exposure parameters as presented in associated tables in this attachment.
3 Cleanup level derived using the Toxic Substances Control Act, 40 CFR 761.61.
4 MTCA Method B uses WAC 173-340-740, equations 740-1 and 740-2; MTCA Method C uses WAC-173-340-745, equations 745-1 and 745-2 (Ecology 2007); specific parameters are presented in associated tables in this attachment
5 EPA RSL calculations using EPA toxicity factors and exposure parameters as presented in associated tables in this attachment. EPA RSL Worker scenario has been modified to a 1 in 100,000 excess individual lifetime cancer risk and a soil ingestion rate of 200 mg/kg-day by an EPA Region 10 risk management decision.

6 Sediment Management Standards Sediment Quality Standards Chemical Criteria (dry weight) (WAC-173-204-320[a]).
7 Soil to Groundwater cleanup values are based on the MTCA fixed parameter three-phase partitioning model (WAC 173-340-747, equation 747-1), using partitioning factors presented in associated tables in this attachment.
8 The provisional toxicity factors for this chemical are semi-quantative and should be used for screening purposes only.

Abbreviations:

CAS Chemical abstract number
CLARC Cleanup Levels and Risk Calculation
Ecology Washington State Department of Ecology
EPA U.S. Environmental Protection Agency
MTCA Model Toxics Control Act
RSL Regional screening level
SMS Sediment Management Standards
SQS Sediment Quality Standards
TSCA Toxic Substances Control Act

Table A.3b
Groundwater Standards, Criteria, and Risk-based Calculations

		Protection of Drinking Water[2]				Protection of Aquatic Species						Protection of Human Health for Consumption of Fish and Shellfish in Marine Waters				EPA Proposed TMCL for Surface Water and Groundwater Discharging to Surface Water in the Lower Duwamish Waterway	
		Drinking Water Standard/Criteria[3]				Freshwater Standards			Marine Standards								
		Federal Primary Drinking Water Standards[4]	EPA RSL Tap Water Criteria[5]	State Primary Drinking Water Standards[6]	MTCA B Groundwater Cleanup Level[7]	Federal National Toxics Rule[8]	Federal Ambient Water Quality Criteria[9, 10]	Washington Surface Water Quality Standards[10, 11]	Federal National Toxics Rule[8]	Federal Ambient Water Quality Criteria[9]	Washington Surface Water Quality Standards[10, 11]	Federal National Toxics Rule[8]	Federal Ambient Water Quality Criteria[9]	EPA R10 Tribal Scenarios[11, 12]	MTCA Method B Surface Water[11,13]		
		EPA MCLs		Washington MCLs		Chronic	Chronic	Chronic	Chronic	Chronic	Chronic	Organism Only			Fish/Shellfish		
CAS Number	Chemical[1]	(µg/L)	(µg/L)	(µg/L)	(µg/L)	(µg/L)	(µg/L)	(µg/L)	(µg/L)	(µg/L)	(µg/L)	(µg/L)			(µg/L)	(µg/L)	Exposure Pathway Basis of TMCL
Semivolatile Organic Compounds (SVOCs)																	
83-32-9	Acenaphthene	--	2.2E+03	--	9.6E+02	--	--	--	--	--	--	--	9.9E+02	1.2E+02	7.7E+02	1.2E+02	EPA R10 Tribal Consumption of Seafood.
208-96-8	Acenaphthylene	--	--	--	--	--	--	--	--	--	--	--	--	--	--	--	--
120-12-7	Anthracene	--	1.1E+04	--	4.8E+03	--	--	--	--	--	--	1.1E+05	4.0E+04	2.0E+02	1.3E+03	2.0E+02	EPA R10 Tribal Consumption of Seafood.
191-24-2	Benzo(g,h,i)perylene	--	--	--	--	--	--	--	--	--	--	--	--	--	--	--	--
117-81-7	Bis(2-ethylhexyl)phthalate	6.0E+00	4.8E+00	--	6.3E+00	--	--	--	--	--	--	5.9E+00	2.2E+00	1.2E+00	8.7E+00	1.2E+00	EPA R10 Tribal Consumption of Seafood.
85-68-7	Butylbenzyl phthalate	--	3.5E+01	--	4.6E+01	--	--	--	--	--	--	--	1.9E+03	4.1E-01	2.9E+00	4.1E-01	EPA R10 Tribal Consumption of Seafood.
59-50-7	4-chloro-3-methylphenol	--	3.7E+03	--	--	--	--	--	--	--	--	--	--	--	--	3.7E+03	Surrogate Value: EPA RSL Tap Water Criteria.
132-64-9	*Dibenzofuran* [14]	--	*3.7E+01*	--	*0.0E+00*	--	--	--	--	--	--	--	--	--	--	--	--
84-74-2	Di-n-butylphthalate	--	3.7E+03	--	1.6E+03	--	--	--	--	--	--	1.2E+04	4.5E+03	4.7E+01	3.1E+02	4.7E+01	EPA R10 Tribal Consumption of Seafood.
84-66-2	Diethylphthalate	--	2.9E+04	--	1.3E+04	--	--	--	--	--	--	1.2E+05	4.4E+04	1.8E+04	1.2E+05	1.8E+04	EPA R10 Tribal Consumption of Seafood.
105-67-9	2,4-Dimethylphenol	--	7.3E+02	--	3.2E+02	--	--	--	--	--	--	--	8.5E+02	6.6E+02	4.4E+03	6.6E+02	EPA R10 Tribal Consumption of Seafood.
131-11-3	Dimethylphthalate	--	--	--	--	--	--	--	--	--	--	2.9E+06	1.1E+06	--	--	1.1E+06	Marine Chronic AWQC to protect human consumption of seafood.
117-84-0	Di-n-octyl phthalate	--	--	--	--	--	--	--	--	--	--	--	--	--	--	--	--
206-44-0	Fluoranthene	--	1.5E+03	--	6.4E+02	--	--	--	--	--	--	3.7E+02	1.4E+02	1.1E+01	7.4E+01	1.1E+01	EPA R10 Tribal Consumption of Seafood.
86-73-7	Fluorene	--	1.5E+03	--	6.4E+02	--	--	--	--	--	--	1.4E+04	5.3E+03	4.5E+01	3.0E+02	4.5E+01	EPA R10 Tribal Consumption of Seafood.
7440-62-2	1-Methylnaphthalene	--	2.3E+00	--	--	--	--	--	--	--	--	--	--	--	--	2.3E+00	Surrogate Value: EPA RSL Tap Water Criteria.
91-57-6	2-Methylnaphthalene	--	1.5E+02	--	6.4E+01	--	--	--	--	--	--	--	--	--	--	6.4E+01	Surrogate Value: MTCA B groundwater to protect drinking water.
95-48-7	2-Methylphenol (o-cresol)	--	1.8E+03	--	8.0E+02	--	--	--	--	--	--	--	--	3.1E+03	2.0E+04	3.1E+03	EPA R10 Tribal Consumption of Seafood.
106-44-5	4-Methylphenol (p-cresol)	--	1.8E+02	--	8.0E+01	--	--	--	--	--	--	--	--	3.3E+02	2.2E+03	3.3E+02	EPA R10 Tribal Consumption of Seafood.
91-20-3	Naphthalene[15]	--	1.4E-01	--	1.6E+02	--	--	--	--	--	--	--	--	2.6E+01	1.7E+02	2.6E+01	EPA R10 Tribal Consumption of Seafood.
85-01-8	Phenanthrene	--	--	--	--	--	--	--	--	--	--	--	--	--	--	--	--
108-95-2	Phenol	--	1.1E+04	--	4.8E+03	--	--	--	--	--	--	4.6E+06	8.6E+05	4.1E+04	2.7E+05	4.1E+04	EPA R10 Tribal Consumption of Seafood.
129-00-0	Pyrene	--	1.1E+03	--	4.8E+02	--	--	--	--	--	--	1.1E+04	4.0E+03	9.8E+00	6.6E+01	9.8E+00	EPA R10 Tribal Consumption of Seafood.
Polychlorinated Biphenyls (PCBs)																	
53469-21-9	Aroclor 1016/1242	--	3.4E-02	--	4.4E-02	--	--	--	--	--	--	--	--	2.3E-05	1.6E-04	2.3E-05	EPA R10 Tribal Consumption of Seafood.
12672-29-6	Aroclor 1248	--	3.4E-02	--	4.4E-02	--	--	--	--	--	--	--	--	2.3E-05	1.6E-04	2.3E-05	EPA R10 Tribal Consumption of Seafood.
11097-69-1	Aroclor 1254	--	3.4E-02	--	4.4E-02	--	--	--	3.0E-02	--	--	--	--	5.5E-06	3.9E-05	5.5E-06	EPA R10 Tribal Consumption of Seafood.
37324-23-2	Aroclor 1260	--	3.4E-02	--	4.4E-02	--	--	--	3.0E-02	--	--	--	--	2.3E-05	1.6E-04	2.3E-05	EPA R10 Tribal Consumption of Seafood.
1336-36-3	Total PCBs	--	3.4E-02	--	4.4E-02	--	1.4E-02	1.4E-02	--	3.0E-02	3.0E-02	1.7E-04	6.4E-05	2.3E-05	1.6E-04	2.3E-05	EPA R10 Tribal Consumption of Seafood.

Notes:

1 Not all chemicals are constituents needing TMCLs at Boeing Plant 2.
2 Drinking water standards/criteria are not applicable to Boeing Plant 2 unless no other applicable standard exists for a constituent needing a TMCL in groundwater
3 The standards are potentially applicable to groundwater that may be used for drinking water supplies. Ecology determines the maximum beneficial use of groundwater, which may or may not include drinking
4 National Primary Drinking Water Regulations, Maximum Contaminant Levels (MCLs); http://water.epa.gov/drink/contaminants/index.cfm
5 EPA RSL, Residential Tapwaters; http://www.epa.gov/region9/superfund/prg/.
6 Washington Primary Drinking Water Standards WAC 246-290-130, Maximum Contaminant Levels (MCLs).
7 Standard MTCA Method B uses WAC 173-340-740; equations 730-1 and 730-2 (Ecology 2007). Parameters and toxicity factors can be found in associated tables in this attachment.
8 National Toxics Rule (NTR), 40 CFR 131.36.
9 EPA Ambient Water Quality Criteria (AWQCs), Clean Water Action Section 304.
10 Washington Surface Water Quality Standards; WAC 173-201A, Surface Water Quality Criteria.
11 EPA and Ecology fish consumption scenarios are based on MTCA Method B Surface Water Equations (equations 730-1 and 730-2); however, they use different exposure assumptions. Details are given in associated tables in this attachment
12 This column uses the approach described in Note 8, but selects the lower concentrations that are protective of special populations including Tribal and Asian/Pacific Islander; the lowest concentration is always associated with Tribal exposure
13 This column is included for comparison only and is based on the default exposure scenario in MTCA 173-340-730.
14 The provisional toxicity factors for this chemical are semi-quantative and should be used for screening purposes only.
15 Naphthalene is treated as a volatile organic compound (VOC) for MTCA Groundwater calculations and therefore uses an Inhalation Correction Factor of 2 instead of 1.

Abbreviations:

CAS Chemical abstract factor
Ecology Washington State Department of Ecology
EPA U.S. Environmental Protection Agency
MTCA Model Toxics Control Act
CLARC Cleanup Levels and Risk Calculation
R10 Region 10
RSL Regional screening level

Table A.3c
Soil Calculations

		Direct Contact Exposures																								Protection of Groundwater	
		Ecology Default Calculations				EPA RSL Calculations with Site-Specific Factors																Proposed TMCLs				MTCA Three-Phase Model for Unsaturated Soils	
		Residential		Industrial		Residential Exposure								Worker Exposure								Direct Contact Exposure					
		MTCA Method B with CLARC Values		MTCA Method C with CLARC Values		Cancer Risk with EPA RSL Calculations, Parameters, and Toxicity Factors				Non-cancer Risk with EPA RSL Calculations, Parameters, and Toxicity Factors				Cancer Risk with EPA RSL Calculations, Parameters, and Toxicity Factors; Modified to 10-5 Cancer Risk and Ingestion Rate of 200 mg/day				Non-cancer Risk with EPA RSL Calculations, Parameters, and Toxicity Factors				Residential		Industrial		Groundwater Target to be Protected[1]	Three-phase Partitioning Between Soil, Soil Vapor, and Groundwater using MTCA Equation[2]
CAS Number	Chemical	Cancer (mg/kg)	Non-cancer (mg/kg)	Cancer (mg/kg)	Non-cancer (mg/kg)	Ingestion (mg/kg)	Dermal (mg/kg)	Inhalation (mg/kg)	TOTAL (mg/kg)	Ingestion (mg/kg)	Dermal (mg/kg)	Inhalation (mg/kg)	TOTAL (mg/kg)	Ingestion (mg/kg)	Dermal (mg/kg)	Inhalation (mg/kg)	TOTAL (mg/kg)	Ingestion (mg/kg)	Dermal (mg/kg)	Inhalation (mg/kg)	TOTAL (mg/kg)	Cancer (mg/kg)	Non-cancer (mg/kg)	Cancer (mg/kg)	Non-cancer (mg/kg)	(mg/kg)	(mg/kg)
Semivolatile Organic Compounds (SVOCs)																											
83-32-9	Acenaphthene	--	4.8E+03	--	2.1E+05	--	--	--	--	4.7E+03	1.3E+04	--	3.4E+03	--	--	--	--	3.1E+04	7.1E+04	--	2.1E+04	--	3.4E+03	--	2.1E+04	1.2E+02	2.3E+02
208-96-8	Acenaphthylene	--	--	--	--	--	--	--	--	--	--	--	--	--	--	--	--	--	--	--	--	--	--	--	--	--	--
120-12-7	Anthracene	--	2.4E+04	--	1.1E+06	--	--	--	--	2.3E+04	6.4E+04	--	1.7E+04	--	--	--	--	1.5E+05	3.6E+05	--	1.1E+05	--	1.7E+04	--	1.1E+05	2.0E+02	1.6E+03
191-24-2	Benzo(g,h,i)perylene	--	--	--	--	--	--	--	--	--	--	--	--	--	--	--	--	--	--	--	--	--	--	--	--	--	--
117-81-7	Bis(2-ethylhexyl)phthalate	7.1E+01	1.6E+03	9.4E+03	7.0E+04	4.6E+01	1.4E+02	1.4E+06	3.5E+01	1.6E+03	5.6E+03	--	1.2E+03	1.0E+03	3.1E+03	6.9E+07	7.7E+02	1.0E+04	3.1E+04	--	7.7E+03	3.5E+01	1.2E+03	7.7E+02	7.7E+03	1.2E+00	5.7E+01
85-68-7	Butylbenzyl phthalate	5.3E+02	1.6E+04	6.9E+04	7.0E+05	3.4E+02	1.1E+03	--	2.6E+02	1.6E+04	5.6E+04	--	1.2E+04	7.5E+03	2.3E+04	--	5.7E+03	1.0E+05	3.1E+05	--	7.7E+04	2.6E+02	1.2E+04	5.7E+03	7.7E+04	4.1E-01	1.7E+00
59-50-7	4-chloro-3-methylphenol	--	8.0E+03	--	3.5E+05	--	--	--	--	7.8E+03	2.8E+04	--	6.1E+03	--	--	--	--	5.1E+04	1.5E+05	--	3.8E+04	--	6.1E+03	--	3.8E+04	3.7E+03	7.4E+02
132-64-9	*Dibenzofuran* [3]	--	--	--	--	--	--	--	--	*7.8E+01*	--	--	7.8E+01	--	--	--	--	5.1E+02	--	--	*5.1E+02*	--	*7.8E+01*	--	*5.1E+02*	--	--
84-74-2	Di-n-butylphthalate	--	8.0E+03	--	3.5E+05	--	--	--	--	7.8E+03	2.8E+04	--	6.1E+03	--	--	--	--	5.1E+04	1.5E+05	--	3.8E+04	--	6.1E+03	--	3.8E+04	4.7E+01	2.6E+01
84-66-2	Diethylphthalate	--	6.4E+04	--	2.8E+06	--	--	--	--	6.3E+04	2.2E+05	--	4.9E+04	--	--	--	--	4.1E+05	1.2E+06	--	3.1E+05	--	4.9E+04	--	3.1E+05	1.8E+04	7.6E+02
105-67-9	2,4-Dimethylphenol	--	1.6E+03	--	7.0E+04	--	--	--	--	1.6E+03	5.6E+03	--	1.2E+03	--	--	--	--	1.0E+04	3.1E+04	--	7.7E+03	--	1.2E+03	--	7.7E+03	6.6E+02	9.5E+01
131-11-3	Dimethylphthalate	--	--	--	--	--	--	--	--	--	--	--	--	--	--	--	--	--	--	--	--	--	--	--	--	1.1E+06	--
117-84-0	Di-n-octyl phthalate	--	--	--	--	--	--	--	--	--	--	--	--	--	--	--	--	--	--	--	--	--	--	--	--	--	--
206-44-0	Fluoranthene	--	3.2E+03	--	1.4E+05	--	--	--	--	3.1E+03	8.6E+03	--	2.3E+03	--	--	--	--	2.0E+04	4.8E+04	--	1.4E+04	--	2.3E+03	--	1.4E+04	1.1E+01	2.3E+02
86-73-7	Fluorene	--	3.2E+03	--	1.4E+05	--	--	--	--	3.1E+03	8.6E+03	--	2.3E+03	--	--	--	--	2.0E+04	4.8E+04	--	1.4E+04	--	2.3E+03	--	1.4E+04	4.5E+01	1.5E+02
7440-62-2	1-Methylnaphthalene	3.4E+01	--	4.5E+03	--	2.2E+01	5.4E+01	--	1.6E+01	5.5E+03	1.5E+04	--	4.0E+03	4.9E+02	1.2E+03	--	3.5E+02	3.6E+04	8.3E+04	--	2.5E+04	1.6E+01	4.0E+03	3.5E+02	2.5E+04	2.3E+00	--
91-57-6	2-Methylnaphthalene	--	3.2E+02	--	1.4E+04	--	--	--	--	3.1E+02	8.6E+02	--	2.3E+02	--	--	--	--	2.0E+03	4.8E+03	--	1.4E+03	--	2.3E+02	--	1.4E+03	6.4E+01	--
95-48-7	2-Methylphenol (o-cresol)	--	4.0E+03	--	1.8E+05	--	--	--	--	3.9E+03	1.4E+04	--	3.1E+03	--	--	--	--	2.6E+04	7.7E+04	--	1.9E+04	--	3.1E+03	--	1.9E+04	3.1E+03	2.5E+02
106-44-5	4-Methylphenol (p-cresol)	--	4.0E+02	--	1.8E+04	--	--	--	--	3.9E+02	1.4E+03	--	3.1E+02	--	--	--	--	2.6E+03	7.7E+03	--	1.9E+03	--	3.1E+02	--	1.9E+03	3.3E+02	4.1E+01
91-20-3	Naphthalene	--	1.6E+03	--	7.0E+04	--	--	3.6E+00	3.6E+00	1.6E+03	4.3E+03	1.6E+02	1.4E+02	--	--	1.8E+02	1.8E+02	1.0E+04	2.4E+04	6.6E+02	6.0E+02	3.6E+00	1.4E+02	1.8E+02	6.0E+02	2.6E+01	1.6E+01
85-01-8	Phenanthrene	--	--	--	--	--	--	--	--	--	--	--	--	--	--	--	--	--	--	--	--	--	--	--	--	--	--
108-95-2	Phenol	--	2.4E+04	--	1.1E+06	--	--	--	--	2.3E+04	8.4E+04	--	1.8E+04	--	--	--	--	1.5E+05	4.6E+05	--	1.2E+05	--	1.8E+04	--	1.2E+05	4.1E+04	1.9E+03
129-00-0	Pyrene	--	2.4E+03	--	1.1E+05	--	--	--	--	2.3E+03	6.4E+03	--	1.7E+03	--	--	--	--	1.5E+04	3.6E+04	--	1.1E+04	--	1.7E+03	--	1.1E+04	9.8E+00	2.4E+02
Polychlorinated Biphenyls (PCBs)																											
53469-21-9	Aroclor 1016/1242	5.0E-01	--	6.6E+01	--	3.2E-01	7.2E-01	--	2.2E-01	--	--	--	--	7.2E+00	1.5E+01	--	4.9E+00	--	--	--	--	2.2E-01	--	4.9E+00	--	2.3E-05	7.2E-04
12672-29-6	Aroclor 1248	5.0E-01	--	6.6E+01	--	3.2E-01	7.2E-01	--	2.2E-01	--	--	--	--	7.2E+00	1.5E+01	--	4.9E+00	--	--	--	--	2.2E-01	--	4.9E+00	--	2.3E-05	--
11097-69-1	Aroclor 1254	5.0E-01	1.6E+00	6.6E+01	7.0E+01	3.2E-01	7.2E-01	--	2.2E-01	1.6E+00	4.0E+00	--	1.1E+00	7.2E+00	1.5E+01	--	4.9E+00	1.0E+01	2.2E+01	--	7.0E+00	2.2E-01	1.1E+00	4.9E+00	7.0E+00	5.5E-06	2.9E-04
37324-23-2	Aroclor 1260	5.0E-01	--	6.6E+01	--	3.2E-01	7.2E-01	--	2.2E-01	--	--	--	--	7.2E+00	1.5E+01	--	4.9E+00	--	--	--	--	2.2E-01	--	4.9E+00	--	2.3E-05	5.4E-03
1336-36-3	Total PCBs	5.0E-01	--	6.6E+01	--	3.2E-01	7.2E-01	--	2.2E-01	--	--	--	--	7.2E+00	1.5E+01	--	4.9E+00	--	--	--	--	2.2E-01	--	4.9E+00	--	2.3E-05	1.8E-03

Notes:

1 Refer to Table A.3b, Groundwater Standards, Criteria, and Risk-based Calculations, of this attachment.
2 Soil to Groundwater cleanup values are based on the MTCA fixed parameter three-phase partitioning model (WAC 173-340-747, equations 747-1 and 747-2), using partitioning factors presented in associated tables in this attachment.
3 The provisional toxicity factors for this chemical are semi-quantative and should be used for screening purposes only.

Abbreviations:

CAS Chemical abstract number
CLARC Cleanup Levels and Risk Calculation
Ecology Washington State Department of Ecology
EPA U.S. Environmental Protection Agency
MTCA Model Toxics Control Act
RSL Regional screening level

Table A.3d
Soil Equations and Parameters

Soil Cleanup Levels from Non-cancer Effects for Ingestion Only

Equation 740-1
Non-cancer

Soil Cleanup Level (mg/kg) = **EPA $SSL_{SOIL\text{-}NC\text{-}ING}$ =**

$$\frac{(RfD_o \times ABW \times UCF \times HQ \times AT)}{(SIR \times AB1 \times EF \times ED)}$$

Terminology in MTCA:

RfD_o = Reference dose (mg/kg-day) as specified in WAC 173-340-708(7)
ABW = Average body weight (kg) over the exposure duration
UCF = 1,000,000 mg/kg
SIR = Soil ingestion rate (mg/kg)
AB1 = Gastrointestinal absorption fraction (unitless)
HQ = Hazard quotient (unitless)
AT = Averaging time (years)
ED = Exposure duration (years)
EF = Exposure frequency (fraction of time)

Terminology in EPA RSL Equation:

=	BW	Body weight (kg)
=	same	
=	IRS	Ingestion rate soil (mg/day)
=	not used	
=	THQ	Target hazard quotient (unitless)
=	AT	Averaging time (days)
=	ED	Exposure duration (years)
=	EF	Exposure frequency (days/year)

Exposure Scenarios	RfD_o (mg/kg-day)	ABW (kg)	HQ (unitless)	AT (years)	SIR (mg/day)	AB1 (unitless)	EF (unitless)	ED (years)	Assumptions for Unitless EF Term: Total Days (days)	hours/day (unitless)	days/week (unitless)	weeks/year (unitless)
MTCA Method B Residential Child	<table>	16	1	6	200	1	1.00	6	365	24	7	52
MTCA Method C Worker	<table>	70	1	20	50	1	0.40	20	350	10	7	50
EPA RSL Residental Child	<table>	15	1	6	200	1	0.96	6	350			
EPA RSL Residental Adult	<table>	70	1	24	100	1	0.96	25	350			
Modified EPA RSL Worker[1,2]	<table>	70	1	25	200	1	0.68	25	250			

EPA RSL **Soil Screening Levels from Non-cancer Effects**

Soil Screening Level (mg/kg)=

$$\frac{1}{\frac{1}{SSL_{SOIL\text{-}NC\text{-}ING}} + \frac{1}{SSL_{SOIL\text{-}NC\text{-}DER}} + \frac{1}{SSL_{SOIL\text{-}NC\text{-}INH}}}$$

< ---------- Ingestion of Soil Term ----------> < ------ Dermal Contact with Soil Term -------> < ---------- Inhalation of Dust ---------->

$SSL_{SOIL\text{-}NC\text{-}ING}$ = **Use the MTCA equation above for ingestion**

$$SSL_{SOIL\text{-}NC\text{-}DER} = \frac{THQ \times BW \times AT \times RfD_d \times UCF1}{EF \times ED \times SA \times AF \times ABS_d} = \frac{RfD_d}{ABS_d} \times \frac{THQ \times BW \times AT \times UCF1}{EF \times ED \times SA \times AF}$$

$$SSL_{SOIL\text{-}NC\text{-}INH} = \frac{THQ \times AT}{(1/RfC_i) \times EF \times ED \times ET \times UCF2 \times [(1/PEF) + (1/VF)]} = \frac{RfC_i}{[1/VF + 1/PEF]} \times \frac{THQ \times AT}{EF \times ED \times ET \times UCF2}$$

THQ = Target Hazard Quotient (or HQ Hazard Quotient), unitless
BW = Body Weight (kg)
AT = Averaging Time (total number of days in the averaging time: 6 yrs for children; 25 years for workers)
RfD_d = Dermal reference dose (mg/kg-day) = RfD_o * GI-abs
GI-abs = GI absorption conversion factor (unitless)
UCF1 = 1,000,000 mg/kg
EF = Exposure frequency (days/year)
ED = Exposure duration (years)
ET = Exposure time (hours/day)
SA = Surface area exposed (cm^2/day)
AF = Adherence factor (mg/cm^2)
ABS_d = Skin absorption factor (unitless)
RfC_i = Reference concentration, inhalation (mg/m^3; chemical specific)
PEF = Particulate emission factor used for dusts (m^3/kg; 1.4 E+9 from EPA RSL User Manual)
VF = Volatilization factor used for volatile organic compounds (m^3/kg; chemical specific)
UCF2 = 1/24 day/hour

Source: http://www.epa.gov/reg3hwmd/risk/human/rb-concentration_table/usersguide.htm

Exposure Scenarios	THQ (unitless)	BW (kg)	AT (days)	RfD_d (mg/kg-day)	ED (years)	EF (days/year)	ET (hours/day)	IRS (mg/day)	SA (cm^2/day)	AF (mg/cm^2)	ABS (unitless)	RfC_i (mg/m^3)	VF (m^3/kg)	PEF (m3/kg)	1/VF + 1/PEF (m^3/kg)
EPA RSL Residential (Child)	1	15	2,190	<table>	6	350	24	200	2,800	0.2	<table>	<table>	<table>	1.36E+09	<table>
Modified EPA RSL Worker[1,2]	1	70	9,125	<table>	25	250	8	200	3,300	0.2	<table>	<table>	<table>	1.36E+09	<table>

Ecology **Soil Cleanup Levels from Cancer Risk for Ingestion Only**

Equation 740-2
Cancer

Soil Cleanup Level (mg/kg)=

$$\frac{(RISK \times ABW \times AT \times UCF)}{(CPF_o \times SIR \times AB1 \times ED \times EF)}$$

RISK = Acceptable excess individual lifetime cancer risk level (unitless)
ABW = Average body weight (kg) over the exposure duration
AT = Averaging time (years)
UCF = 1,000,000 mg/kg
CPF_o = Carcinogenic potency factor (kg-day/mg)
SIR = Soil ingestion rate (mg/day)
AB1 = Gastrointestinal absorbtion fraction (unitless)
ED = Exposure duration (years)
EF = Exposure frequency (unitless)

Exposure Scenarios	RISK (unitless)	ABW (kg)	AT (years)	CPF_o (kg-day/mg)	SIR (mg/day)	AB1 (unitless)	ED (years)	EF (unitless)	Assumptions for Unitless EF Term: hours/day (unitless)	days/week (unitless)	weeks/year (unitless)
DEFAULT MTCA Method B	1.00E-06	16	75	<table>	200	1	6	1	24	7	52
DEFAULT MTCA Method C	1.00E-05	70	75	<table>	50	1	20	0.4	24	7	52

Table A.3d
Soil Equations and Parameters

EPA RSL — **Soil Screening Level from Cancer Risk for Residents (Childhood Corrected) and Workers**

< ---------- Ingestion of Soil Term ----------> < ------ Dermal Contact with Soil Term -------> < --------- Inhalation of Dust ---------->

$$\text{Soil Screening Level (mg/kg)} = \frac{1}{\frac{1}{SSL_{SOIL\text{-}CA\text{-}ING}} + \frac{1}{SSL_{SOIL\text{-}CA\text{-}DER}} + \frac{1}{SSL_{SOIL\text{-}CA\text{-}INH}}}$$

$$SSL_{SOIL\text{-}CA\text{-}ING} = \frac{TR \times AT}{CSF_o \times EF \times IFS \times UCF1} \quad \text{where} \quad IFS = \frac{ED_c \times IRS_c}{BW_c} + \frac{ED_a \times IRS_a}{BW_a}$$

$$SSL_{SOIL\text{-}CA\text{-}DER} = \frac{TR \times AT}{CSF_d \times EF \times DFS \times ABS_d \times UCF1} \quad \text{where} \quad DFS = \frac{ED_c \times SA_c \times AF_c}{BW_c} + \frac{ED_a \times SA_a \times AF_a}{BW_a} \quad \text{and where} \quad CSFd = CSFo * GI\text{-}Abs$$

$$SSL_{SOIL\text{-}NC\text{-}INH} = \frac{TR \times AT}{IUR \times UCF2 \times EF \times ED \times ET \times UCF3 \times [(1/PEF) + (1/VF)]} = \frac{1}{IUR*[1/VF + 1/PEF]} \times \frac{TR \times AT}{UCF2 \times EF \times ED \times ET \times UCF3}$$

TR = Target excess individual lifetime cancer risk (unitless)
AT = Averaging time in days = 365 day/year * Lifetime (years)
CSF_o = Oral cancer slope factor (kg-day/mg)
EF = Exposure frequency (days/year)
IFS = Resident soil ingestion rate; age-adjusted (mg-year/kg-day)
UCF1 = 1/1,000,000 kg/mg
Ed_c = Exposure duration, child (years)
IRS_c = Resident soil ingestion rate, child; age-adjusted (mg-year/kg-day)
BW_c = Body weight, child (kg)
ED_a = Exposure duration, adult (years)
IRS_a = Resident soil ingestion rate, adult; age-adjusted (mg-year/kg-day)
BW_a = Body weight, adult (kg)
CSF_d = Cancer slope factor, dermal = CSFo*GI-abs
GI-abs = GI absorption conversion factor (unitless)
DFS = Resident soil dermal contact factor; age-adjusted (mg-year/kg-day)
ABS_d = Skin absorption factor (chemical specific)
SA_c = Surface area, child (cm^2/day)
AF_c = Adherence factor, child (mg/cm^2)
SA_a = Surface area, adult (cm^2/day)
AF_a = Adherence factor, adult (mg/cm^2)
IUR = Inhalation unit rate ($m^3/\mu g$)
UCF2 = 1000 µg/mg
UCF3 = 1/24 day/hr
ED = Exposure duration (years)
ET = Exposure time (hours/day)
PEF = Particulate emission factor used for dusts (m^3/kg)
VF = Volatilization factor used for volatile organic compounds (m^3/kg)

Source: http://www.epa.gov/reg3hwmd/risk/human/rb-concentration_table/usersguide.htm

Exposure Scenarios	TR (unitless)	AT (days)	LT (years)	SF_o (kg-day/mg)	EF (days/year)	ET (hours/day)	IFS (mg-year/kg-day)	IRS (mg-year/kg-day)	ED (years)	BW (kg)	DFS (mg-year/kg-day)	SA (cm^2/day)	AF (mg/cm^2)	ABS (unitless)	IUR ($m^3/\mu g$)	PEF (m^3/kg)	VF (m3/kg)	(1/VF + 1/PEF) (m^3/kg)
EPA RSL Resident	1.00E-06	25,550	70	<table>	350	24	114		30		361			<table>	<table>	1.36E+09	<table>	<table>
contribution during childhood							80	200	6	15	224	2,800	0.2	<table>	<table>	1.36E+09	<table>	<table>
contribution during adult years							34	100	24	70	137	5,700	0.07	<table>	<table>	1.36E+09	<table>	<table>
Modified EPA RSL Worker[1,2]	1.00E-05	25,550	70	<table>	250	8	71	200	25	70	236	3,300	0.2	<table>	<table>	1.36E+09	<table>	<table>

Ecology — **Three-phase Partitioning Between Soil, Soil Vapor, and Groundwater Using MTCA Equation**

Equation 747-1

$$\text{Soil Concentration (mg/kg)} = Cs = C_w \times UCF \times DF \times \left(Kd + \frac{(\theta w + \theta a Hcc)}{\rho_b} \right) = C_w \times UCF \times DF \times K_d + \frac{C_w \times UCF \times DF \times \theta w}{\rho_b} + \frac{C_w \times UCF \times DF \times \theta a \times H_{cc}}{\rho_b} = C_w * (C1*K_d + C2 + C3*Hcc)$$

where

$$C1 = UCF \times DF$$
$$C2 = \frac{UCF \times DF \times \theta w}{\rho_b}$$
$$C3 = \frac{UCF \times DF \times \theta a}{\rho_b}$$

C_w = Ground water cleanup level established under WAC 173-340-720 (µg/L)
UCF = 1/1000 mg/µg
DF = Dilution factor (dimensionless)
Kd = Distribution coefficient (L/kg)
θ_w = Water-filled soil porosity (ml water/ml soil)
θa = Air-filled soil porosity (ml air/ml soil)
Hcc = Henry's law constant (dimensionless)
ρ_b = Dry soil bulk density (kg/L)

Exposure Scenarios	Cw (µg/L)	DF (unitless)	K_d (L/kg)	θw (ml water/ ml soil)	θa (ml air/ ml soil)	H_{cc} (unitless)	ρ_b (kg/L)	C1 (mg/µg)	C2 (L-ml water/ ml soil)	C3 (L-ml air/ ml soil)
Soil Concentration for Saturated Soil	<table>	20	<table>	0.3	0.13	<table>	1.5	0.02	0.004	0.002

Notes:

[ ] Indicates no value is required in calculations for the associated exposure scenario indicated.
<table> Indicates a chemical-specific factor is available in the associated tables of this attachment.
1 EPA RSL Worker scenario has been modified to a 1 in 100,000 excess individual lifetime cancer risk and a soil ingestion rate of 200 mg/kg-day by an EPA Region 10 risk management decision.
2 Exposure frequency taken to be 250 days/year. This value was selected based on Region 9 EPA RSL tables last updated November 2010, which uses parameters associated with an indoor worker to calculate risk.

Abbreviations:

EPA U.S. Environmental Protection Agency
MTCA Model Toxics Control Act
RSL Regional screening level
SSL Soil screening level

Subscripts:

CA Cancer
DER Dermal
ING Ingestion
INH Inhalation
NC Non-cancer

Table A.3e
Groundwater Calculations

		Surface Water to Fish Consumption Pathway														Drinking Water Pathways			
		EPA Tribal Calculations				Ecology MTCA Calculations						Proposed Water to Fish Consumption TMCLs				EPA		Ecology	
		Tribal Consumption Child Includes EPA BCFs and Toxicity Factors[1]		Tribal Consumption Adult Includes EPA BCFs and Toxicity Factors[1]		Default (Recreational) Includes EPA BCFs and Toxicity Factors[2]		Asian/Pacific Islander Consumption Child Includes EPA BCFs and Toxicity Factors[3]		Asian/Pacific Islander Consumption Adult Includes EPA BCFs and Toxicity Factors[3]		MTCA Default Consumption Rate Modified to Use EPA Toxicity and Partitioning Coefficients		Tribal and/or Asian/Pacific Islander Modified to Use EPA Toxicity and Partitioning Coefficients		EPA RSL Tap Water[4]		MTCA Method B Groundwater to Protect Drinking Water Use[5]	
CAS Number	Chemical	Cancer (µg/L)	Non-cancer (µg/L)	Cancer (µg/L)	Non-cancer (µg/L)	Cancer (µg/L)	Non-cancer (µg/L)	Cancer (µg/L)	Non-cancer (µg/L)	Cancer (µg/L)	Non-cancer (µg/L)	TMCL (µg/L)	Source (µg/L)	TMCL (µg/L)	Source (µg/L)	Cancer (µg/L)	Non-cancer (µg/L)	Cancer (µg/L)	Non-cancer (µg/L)
Semivolatile Organic Compounds (SVOCs)[6]																			
83-32-9	Acenaphthene	--	1.2E+02	--	2.5E+02	--	7.7E+02	--	1.9E+02	--	3.3E+02	7.7E+02	MTCA B	1.2E+02	Tribal Child	--	2.2E+03	--	9.6E+02
208-96-8	Acenaphthylene	--	--	--	--	--	--	--	--	--	--	--	--	--	--	--	--	--	--
120-12-7	Anthracene	--	2.0E+02	--	4.3E+02	--	1.3E+03	--	3.4E+02	--	5.7E+02	1.3E+03	MTCA B	2.0E+02	Tribal Child	--	1.1E+04	--	4.8E+03
191-24-2	Benzo(g,h,i)perylene	--	--	--	--	--	--	--	--	--	--	--	--	--	--	--	--	--	--
117-81-7	Bis(2-ethylhexyl)phthalate	6.0E+00	1.5E+02	1.2E+00	3.2E+02	8.7E+00	9.7E+02	1.0E+01	2.4E+02	4.3E+00	4.1E+02	8.7E+00	MTCA B	1.2E+00	Tribal Adult	4.8E+00	7.3E+02	6.3E+00	3.2E+02
85-68-7	Butylbenzyl phthalate	2.0E+00	6.5E+01	4.1E-01	1.4E+02	2.9E+00	4.4E+02	3.4E+00	1.1E+02	1.4E+00	1.9E+02	2.9E+00	MTCA B	4.1E-01	Tribal Adult	3.5E+01	7.3E+03	4.6E+01	3.2E+03
59-50-7	4-chloro-3-methylphenol	--	--	--	--	--	--	--	--	--	--	--	--	--	--	--	3.7E+03	--	1.6E+03
132-64-9	*Dibenzofuran*[7]	--	--	--	--	--	--	--	--	--	--	--	--	--	--	--	*3.7E+01*	--	--
84-74-2	Di-n-butylphthalate	--	4.7E+01	--	1.0E+02	--	3.1E+02	--	7.9E+01	--	1.3E+02	3.1E+02	MTCA B	4.7E+01	Tribal Child	--	3.7E+03	--	1.6E+03
84-66-2	Diethylphthalate	--	1.8E+04	--	4.0E+04	--	1.2E+05	--	3.1E+04	--	5.3E+04	1.2E+05	MTCA B	1.8E+04	Tribal Child	--	2.9E+04	--	1.3E+04
105-67-9	2,4-Dimethylphenol	--	6.6E+02	--	1.4E+03	--	4.4E+03	--	1.1E+03	--	1.9E+03	4.4E+03	MTCA B	6.6E+02	Tribal Child	--	7.3E+02	--	3.2E+02
131-11-3	Dimethylphthalate	--	--	--	--	--	--	--	--	--	--	--	--	--	--	--	--	--	--
117-84-0	Di-n-octyl phthalate	--	--	--	--	--	--	--	--	--	--	--	--	--	--	--	--	--	--
206-44-0	Fluoranthene	--	1.1E+01	--	2.4E+01	--	7.4E+01	--	1.9E+01	--	3.1E+01	7.4E+01	MTCA B	1.1E+01	Tribal Child	--	1.5E+03	--	6.4E+02
86-73-7	Fluorene	--	4.5E+01	--	9.9E+01	--	3.0E+02	--	7.6E+01	--	1.3E+02	3.0E+02	MTCA B	4.5E+01	Tribal Child	--	1.5E+03	--	6.4E+02
7440-62-2	1-Methylnaphthalene	--	--	--	--	--	--	--	--	--	--	--	--	--	--	2.3E+00	2.6E+03	3.0E+00	--
91-57-6	2-Methylnaphthalene	--	--	--	--	--	--	--	--	--	--	--	--	--	--	--	1.5E+02	--	6.4E+01
95-48-7	2-Methylphenol (o-cresol)	--	3.1E+03	--	6.7E+03	--	2.0E+04	--	5.2E+03	--	8.7E+03	2.0E+04	MTCA B	3.1E+03	Tribal Child	--	1.8E+03	--	8.0E+02
106-44-5	4-Methylphenol (p-cresol)	--	3.3E+02	--	7.3E+02	--	2.2E+03	--	5.6E+02	--	9.5E+02	2.2E+03	MTCA B	3.3E+02	Tribal Child	--	1.8E+02	--	8.0E+01
91-20-3	Naphthalene[8]	--	2.6E+01	--	5.6E+01	--	1.7E+02	--	4.3E+01	--	7.4E+01	1.7E+02	MTCA B	2.6E+01	Tribal Child	1.4E-01	6.2E+00	--	1.6E+02
85-01-8	Phenanthrene	--	--	--	--	--	--	--	--	--	--	--	--	--	--	--	--	--	--
108-95-2	Phenol	--	4.1E+04	--	8.9E+04	--	2.7E+05	--	6.9E+04	--	1.2E+05	2.7E+05	MTCA B	4.1E+04	Tribal Child	--	1.1E+04	--	4.8E+03
129-00-0	Pyrene	--	9.8E+00	--	2.1E+01	--	6.6E+01	--	1.7E+01	--	2.8E+01	6.6E+01	MTCA B	9.8E+00	Tribal Child	--	1.1E+03	--	4.8E+02
Polychlorinated Biphenyls (PCBs)																			
53469-21-9	Aroclor 1016/1242	1.1E-04	--	2.3E-05	--	1.6E-04	--	1.9E-04	--	8.0E-05	--	1.6E-04	MTCA B	2.3E-05	Tribal Adult	3.4E-02	--	4.4E-02	--
12672-29-6	Aroclor 1248	1.1E-04	--	2.3E-05	--	1.6E-04	--	1.9E-04	--	8.0E-05	--	1.6E-04	MTCA B	2.3E-05	Tribal Adult	3.4E-02	--	4.4E-02	--
11097-69-1	Aroclor 1254	2.7E-05	9.2E-05	5.5E-06	2.0E-04	3.9E-05	6.2E-04	4.5E-05	1.6E-04	1.9E-05	2.6E-04	3.9E-05	MTCA B	5.5E-06	Tribal Adult	3.4E-02	7.3E-01	4.4E-02	3.2E-01
37324-23-2	Aroclor 1260	1.1E-04	--	2.3E-05	--	1.6E-04	--	1.9E-04	--	8.0E-05	--	1.6E-04	MTCA B	2.3E-05	Tribal Adult	3.4E-02	--	4.4E-02	--
1336-36-3	Total PCBs	1.1E-04	--	2.3E-05	--	1.6E-04	--	1.9E-04	--	8.0E-05	--	1.6E-04	MTCA B	2.3E-05	Tribal Adult	3.4E-02	--	4.4E-02	--

Notes:

1 MTCA Method B Equations 730-1 and 730-2 modified to apply Tribal fish ingestion rates, body weights, and exposure duration (Ecology 2007). Refer to associated tables in this attachment for toxicity factors, bioconcentration factors, and exposure parameters.
2 MTCA Method B Equations 730-1 and 730-2 using default exposure assumptions. Refer to associated tables in this attachment for toxicity factors, bioconcentration factors, and exposure parameters.
3 MTCA Method B Equations 730-1 and 730-2 modified to apply Asian/Pacific Islander fish ingestion rates, body weights, and exposure duration (Ecology 2007). Refer to associated tables in this attachment for toxicity factors, bioconcentration factors, and exposure parameters.
4 EPA RSL, Residential Tapwaters; http://www.epa.gov/region9/superfund/prg/.
5 MTCA Method B Equations 720-1 and 720-2 groundwater cleanup levels to protect drinking water uses.
6 Includes all SVOCS except mutagenic/carcinogenic polycyclic aromatic hydrocarbons (cPAHs).
7 The provisional toxicity factors for this chemical are semi-quantative and should be used for screening purposes only.
8 Naphthalene is treated as a volatile organic compound (VOC) for MTCA Groundwater calculations and therefore uses an Inhalation Correction Factor of 2 instead of 1.

Abbreviations:

BCF Bioconcentration factor
CAS Chemical abstract number
Ecology Washington State Department of Ecology
EPA U.S. Environmental Protection Agency
MTCA Model Toxics Control Act
RSL Regional screening level

Table A.3f
Groundwater Equations and Parameters

Surface Water to Fish Consumption by Humans: Non-cancer Effects

$$\text{Surface Water Cleanup of Screening Level (µg/L)} = \frac{(RfD_o \times ABW \times UCF1 \times UCF2 \times HQ \times AT)}{(BCF \times FCR \times FDF \times ED)}$$

RfD_o = Oral reference dose (mg/kg-day)
ABW = Average body weight (kg)
UCF1 = 1,000 g/mg
UCF2 = 1,000 g/L
HQ = Hazard quotient (unitless)
AT = Averaging time (years)
BCF = Bioconcentration factor (L/kg)
FCR = Fish consumption rate (g/day)
FDF = Fish diet fraction (unitless)
ED = Exposure duration (years)

Exposure Scenarios	RfD_o (mg/kg-day)	ABW (kg)	HQ (unitless)	AT (years)	BCF (L/kg)	FCR (g/day)	FDF (unitless)	ED (years)
MTCA Default[1]	<table>	70	1	30	<table>	54	0.5	30
MTCA Asian/Pacific Islander Child2,3	<table>	15	1	6	<table>	23	1	6
MTCA Asian/Pacific Islander Adult2,3	<table>	63	1	24	<table>	57.1	1	24
EPA Tribal Child[3,4]	<table>	15	1	6	<table>	38.8	1	6
EPA Tribal Adult[3,4]	<table>	81.8	1	64	<table>	97.1	1	64

Surface Water to Fish Consumption by Humans: Cancer

$$\text{Surface Water Cleanup or Screening Level (µg/L)} = \frac{(RISK \times ABW \times UCF1 \times UCF2 \times AT)}{(CPF_o \times BCF \times FCR \times FDF \times ED)}$$

Risk = Target excess individual lifetime cancer risk level (unitless)
ABW = Average body weight (kg)
UCF1 = 1,000 µg/mg
UCF2 = 1,000 g/L
AT = Averaging time (years)
CPF_o = Cancer potency factor (kg-day/mg)
BCF = Bioconcentration factor (L/kg)
FCR = Fish consumption rate (g/day)
FDF = Fish diet fraction (unitless)
ED = Exposure duration (years)

Exposure Scenarios	Risk (unitless)	ABW (kg)	AT (years)	CPF_o (kg-day/mg)	BCF (L/kg)	FCR (g/day)	FDF (unitless)	ED (years)
MTCA Default[1]	1.00E-06	70	75	<table>	<table>	54	0.5	30
MTCA Asian/Pacific Islander Child2,3	1.00E-06	15	70	<table>	<table>	23	1	6
MTCA Asian/Pacific Islander Adult2,3	1.00E-06	63	70	<table>	<table>	57.1	1	24
EPA Tribal Child[3,4]	1.00E-06	15	70	<table>	<table>	38.8	1	6
EPA Tribal Adult[3,4]	1.00E-06	81.8	70	<table>	<table>	97.1	1	64

Groundwater (as Drinking Water) Cleanup Levels: Non-cancer Effects

$$\text{Surface Water Cleanup or Screening Level (µg/L)} = \frac{(RfD_o \times ABW \times UCF \times HQ \times AT)}{(DWIR \times INH \times DWF \times ED)}$$

RfD_o = Oral reference dose (mg/kg-day)
ABW = Average body weight (kg)
UCF = 1,000 µg/mg
HQ = Hazard quotient (unitless)
AT = Averaging time (years)
DWIR = Drinking water ingestion rate (L/day)
INH = Inhalation correction factor (unitless)
DWF = Drinking water fraction (unitless)
ED = Exposure duration (years)

Exposure Scenarios	RfD_o (mg/kg-day)	ABW (kg)	HQ (unitless)	AT (years)	DWIR (L/day)	INH (unitless)	DWF (unitless)	ED (years)
MTCA Default[1]	<table>	16	1	6	1	1	1	6

Groundwater (as Drinking Water) Cleanup Levels: Cancer

$$\text{Surface Water Cleanup Screening Level (µg/L)} = \frac{(RISK \times ABW \times UCF \times AT)}{(CPF_o \times DWIR \times INH \times DWF \times ED)}$$

Risk = Target excess individual lifetime cancer risk level (unitless)
ABW = Average body weight (kg)
UCF = 1,000 µg/mg
AT = Averaging time (years)
CPF_o = Cancer potency factor (kg-day/mg)
DWIR = Drinking water ingestion rate (L/day)
INH = Inhalation correction factor (unitless)
DWF = Drinking water fraction (unitless)
ED = Exposure duration (years)

Exposure Scenarios	Risk (unitless)	ABW (kg)	AT (years)	CPF_o (kg-day/mg)	DWIR (L/day)	INH (unitless)	DWF (unitless)	ED (years)
MTCA Default[1]	1.00E-06	70	75	<table>	2	1	1	30

Notes:

<table> Indicates a chemical-specific factor is available in the associated tables of this attachment.

1 All parameters derived from Model Toxics Control Act (MTCA) WAC 173-340-730, equations 730-1 and 730-2. The inhalation parameter is equivalent to 1 for all Semivolatile organic compounds (SVOCs) and is equivalent to 2 for naphthalene, which is treated as a volatile organic compound (VOC).

2 Fish consumption rates derived from Washington State Department of Ecology (Ecology) 2009: MTCA Regulation Update Summary, Fish Consumption Rates for High Exposure Populations.

3 Fish consumption rates include both finfish and shellfish, and exclude salmon.

4 All parameters derived from U.S. Environmental Protection Agency (EPA) Region: Framework for Selecting and Using Tribal Fish and Shellfish Consumption Rates for Risk-based Decision Making (2007).

Table A.3g
Cross-Media Factors

		Other Chemical Factors					Bioconcentration Factors							
		EPA R10					EPA R10		Ecology MTCA/CLARC		Others		Selected for Use[4]	
CAS Number	Chemical	GI Absorption Conversion Factor (unitless)	Dermal Absorption Fraction (unitless)	Volatilization Factor (m^3/kg)	Source for Preceding Factors	(1/VF + 1/PEF)[1] kg/m^3	Water to Fish BCF[2] (L/kg)	Source	Water to Fish BCF[3] (L/kg)	Source	Water to Fish BCF (L/kg)	Source	Water to Fish BCF (L/kg)	Source
Semivolatile Organic Compounds (SVOCs)														
83-32-9	Acenaphthene	1	0.13	1.5E+05	EPA RSL 2010	6.7E-06	2.0E+02	HHRAP	2.4E+02	AWQC Gold Book	--	--	2.0E+02	AWQC Gold Book
208-96-8	Acenaphthylene	1	0.13	--	EPA RSL 2010	7.4E-10	--	--	--	AWQC Gold Book	--	--	--	--
120-12-7	Anthracene	1	0.13	5.6E+05	EPA RSL 2010	1.8E-06	5.8E+02	HHRAP	3.0E+01	AWQC Gold Book	--	--	5.8E+02	HHRAP
191-24-2	Benzo(g,h,i)perylene	1	0.13	--	EPA RSL 2010	7.4E-10	--	--	--	--	--	--	--	--
117-81-7	Bis(2-ethylhexyl)phthalate	1	0.1	--	EPA RSL 2010	7.4E-10	5.3E+01	HHRAP	1.3E+02	AWQC Gold Book	--	--	5.3E+01	HHRAP
85-68-7	Butylbenzyl phthalate	1	0.1	--	EPA RSL 2010	7.4E-10	1.2E+03	HHRAP	4.1E+02	AWQC Gold Book	--	--	1.2E+03	HHRAP
59-50-7	4-chloro-3-methylphenol	1	0.1	--	EPA RSL 2010	7.4E-10	--	--	--	--	--	--	--	--
132-64-9	*Dibenzofuran* [6]	*1*	--	*2.1E+05*	EPA RSL 2010	*4.8E-06*	--	--	--	--	--	--	--	--
84-74-2	Di-n-butylphthalate	1	0.1	--	EPA RSL 2010	7.4E-10	8.3E+02	HHRAP	8.9E+01	AWQC Gold Book	--	--	8.3E+02	AWQC Gold Book
84-66-2	Diethylphthalate	1	0.1	--	EPA RSL 2010	7.4E-10	1.7E+01	HHRAP	7.3E+01	AWQC Gold Book	--	--	1.7E+01	HHRAP
105-67-9	2,4-Dimethylphenol	1	0.1	--	EPA RSL 2010	7.4E-10	1.2E+01	HHRAP	9.4E+01	AWQC Gold Book	--	--	1.2E+01	AWQC Gold Book
131-11-3	Dimethylphthalate	1	0.1	--	EPA RSL 2010	7.4E-10	3.2E+00	HHRAP	3.6E+01	AWQC Gold Book	--	--	3.2E+00	AWQC Gold Book
117-84-0	Di-n-octyl phthalate	1	0.1	--	EPA RSL 2010	7.4E-10	6.4E+01	HHRAP	--	--	--	--	6.4E+01	HHRAP
206-44-0	Fluoranthene	1	0.13	--	EPA RSL 2010	7.4E-10	1.4E+03	HHRAP	1.2E+03	AWQC Gold Book	--	--	1.4E+03	AWQC Gold Book
86-73-7	Fluorene	1	0.13	3.0E+05	EPA RSL 2010	3.3E-06	3.4E+02	HHRAP	3.0E+01	AWQC Gold Book	--	--	3.4E+02	AWQC Gold Book
7440-62-2	1-Methylnaphthalene	1	0.13	6.3E+04	EPA RSL 2010	1.6E-05	--	--	--	--	--	--	--	--
91-57-6	2-Methylnaphthalene	1	0.13	6.2E+04	EPA RSL 2010	1.6E-05	--	--	--	--	--	--	--	--
95-48-7	2-Methylphenol (o-cresol)	1	0.1	--	EPA RSL 2010	7.4E-10	6.3E+00	HHRAP	--	--	--	--	6.3E+00	HHRAP
106-44-5	4-Methylphenol (p-cresol)	1	0.1	--	EPA RSL 2010	7.4E-10	5.8E+00	HHRAP	--	--	--	--	5.8E+00	HHRAP
91-20-3	Naphthalene	1	0.13	5.0E+04	EPA RSL 2010	2.0E-05	6.9E+01	HHRAP	1.1E+01	AWQC Gold Book	3.0E+02	McCarthy 1985[7]	3.0E+02	McCarthy 1985[7]
85-01-8	Phenanthrene	1	0.13	--	EPA RSL 2010	7.4E-10	5.8E+02	HHRAP	--	--	--	--	5.8E+02	HHRAP
108-95-2	Phenol	1	0.1	--	EPA RSL 2010	7.4E-10	2.9E+00	HHRAP	1.4E+00	AWQC Gold Book	--	--	2.9E+00	HHRAP
129-00-0	Pyrene	1	0.13	2.6E+06	EPA RSL 2010	3.9E-07	1.2E+03	HHRAP	3.0E+01	AWQC Gold Book	--	--	1.2E+03	AWQC Gold Book
Polychlorinated Biphenyls (PCBs)														
53469-21-9	Aroclor 1016/1242	1	0.14	--	EPA RSL 2010	7.4E-10	2.0E+04	HHRAP	--	--	--	--	2.0E+04	HHRAP
12672-29-6	Aroclor 1248	1	0.14	--	EPA RSL 2010	7.4E-10	2.0E+04	HHRAP	--	--	--	--	2.0E+04	HHRAP
11097-69-1	Aroclor 1254	1	0.14	--	EPA RSL 2010	7.4E-10	8.4E+04	HHRAP	3.1E+04	AWQC Gold Book	--	--	8.4E+04	HHRAP
37324-23-2	Aroclor 1260	1	0.14	--	EPA RSL 2010	7.4E-10	2.0E+04	HHRAP	--	--	--	--	2.0E+04	HHRAP
1336-36-3	Total PCBs	1	0.14	--	EPA RSL 2010	7.4E-10	2.0E+04	HHRAP	3.1E+04	AWQC Gold Book	--	--	2.0E+04	HHRAP

Table A.3g
Cross-Media Factors

		Soil Organic Carbon to Water Partitioning Coefficient (K_{oc})								Soil to Water Partitioning Coefficient ($K_d = K_{oc} \times f_{oc}$)						Water to Air Partitioning					
		EPA R10		Ecology MTCA/CLARC		Others		Selected for Use		EPA R10		Ecology MTCA/CLARC		Selected for Use[5]		EPA R10		Ecology MTCA/CLARC		Selected for Use	
CAS Number	Chemical	K_{oc} (L/kg)	Source	K_{oc} (L/kg)	Source	K_{oc} (L/kg)	Source	K_{oc} (L/kg)	Source	K_d (L/kg)	Source	K_d (L/kg)	Source	K_d (L/kg)	Source	Henry's Law Constant (H_{cc}) (unitless)	Source	Henry's Law Constant (H_{cc}) (unitless)	Source	Henry's Law Constant (H_{cc}) (unitless)	Source
Semivolatile Organic Compounds (SVOCs)																					
83-32-9	Acenaphthene	5.0E+03	EPI Suite 2010	4.9E+03	EPA SSL 1996	--	--	5.0E+03	Average	5.0E+00	RSL K_{oc}*0.001	4.9E+00	SSL K_{oc}*0.001	9.9E+01	Average K_{oc}*f_{oc}	7.5E-03	EPA RSL 2010	6.4E-03	EPA SSL 1996	6.9E-03	Average
208-96-8	Acenaphthylene	--	--	--	--	--	--	--	--	--	--	--	--	--	--	--	--	--	--	--	--
120-12-7	Anthracene	1.6E+04	EPI Suite 2010	2.3E+04	EPA SSL 1996	--	--	2.0E+04	Average	1.6E+01	RSL K_{oc}*0.001	2.3E+01	SSL K_{oc}*0.001	3.9E+02	Average K_{oc}*f_{oc}	2.3E-03	EPA RSL 2010	2.7E-03	EPA SSL 1996	2.5E-03	Average
191-24-2	Benzo(g,h,i)perylene	--	--	--	--	--	--	--	--	--	--	--	--	--	--	--	--	--	--	--	--
117-81-7	Bis(2-ethylhexyl)phthalate	1.2E+05	EPI Suite 2010	1.1E+05	EPA SSL 1996	--	--	1.1E+05	Average	1.2E+02	RSL K_{oc}*0.001	1.1E+02	SSL K_{oc}*0.001	2.3E+03	Average K_{oc}*f_{oc}	1.1E-05	EPA RSL 2010	4.2E-06	EPA SSL 1996	7.6E-06	Average
85-68-7	Butylbenzyl phthalate	7.2E+03	EPI Suite 2010	1.4E+04	EPA SSL 1996	--	--	1.1E+04	Average	7.2E+00	RSL K_{oc}*0.001	1.4E+01	SSL K_{oc}*0.001	2.1E+02	Average K_{oc}*f_{oc}	5.2E-05	EPA RSL 2010	5.2E-05	EPA SSL 1996	5.2E-05	Average
59-50-7	4-chloro-3-methylphenol	4.9E+02	EPI Suite 2010	--	--	--	--	4.9E+02	Average	4.9E-01	RSL K_{oc}*0.001	--	--	9.8E+00	Average K_{oc}*f_{oc}	1.0E-04	EPA RSL 2010	--	--	1.0E-04	Average
132-64-9	*Dibenzofuran* [6]	*9.2E+03*	*EPI Suite 2010*	--	--	--	--	*9.2E+03*	*Average*	*9.2E+00*	*RSL K_{oc}*0.001*	--	--	*1.8E+02*	*Average K_{oc}*f_{oc}*	*8.7E-03*	*EPA RSL 2010*	--	--	8.7E-03	Average
84-74-2	Di-n-butylphthalate	1.2E+03	EPI Suite 2010	1.6E+03	EPA SSL 1996	--	--	1.4E+03	Average	1.2E+00	RSL K_{oc}*0.001	1.6E+00	SSL K_{oc}*0.001	2.8E+01	Average K_{oc}*f_{oc}	7.4E-05	EPA RSL 2010	3.9E-08	EPA SSL 1996	3.7E-05	Average
84-66-2	Diethylphthalate	1.0E+02	EPI Suite 2010	8.2E+01	EPA SSL 1996	--	--	9.3E+01	Average	1.0E-01	RSL K_{oc}*0.001	8.2E-02	SSL K_{oc}*0.001	1.9E+00	Average K_{oc}*f_{oc}	2.5E-05	EPA RSL 2010	1.9E-05	EPA SSL 1996	2.2E-05	Average
105-67-9	2,4-Dimethylphenol	4.9E+02	EPI Suite 2010	2.1E+02	EPA SSL 1996	--	--	3.5E+02	Average	4.9E-01	RSL K_{oc}*0.001	2.1E-01	SSL K_{oc}*0.001	7.0E+00	Average K_{oc}*f_{oc}	3.9E-05	EPA RSL 2010	8.2E-05	EPA SSL 1996	6.0E-05	Average
131-11-3	Dimethylphthalate	--	--	--	--	--	--	--	--	--	--	--	--	--	--	--	--	--	--	--	--
117-84-0	Di-n-octyl phthalate	--	--	8.3E+07	EPA SSL 1996	--	--	8.3E+07	Average	--	--	8.3E+04	SSL K_{oc}*0.001	--	--	--	--	2.7E-03	EPA SSL 1996	2.7E-03	Average
206-44-0	Fluoranthene	5.5E+04	EPI Suite 2010	4.9E+04	EPA SSL 1996	--	--	5.2E+04	Average	5.5E+01	RSL K_{oc}*0.001	4.9E+01	SSL K_{oc}*0.001	1.0E+03	Average K_{oc}*f_{oc}	3.6E-04	EPA RSL 2010	6.6E-04	EPA SSL 1996	5.1E-04	Average
86-73-7	Fluorene	9.2E+03	EPI Suite 2010	7.7E+03	EPA SSL 1996	--	--	8.4E+03	Average	9.2E+00	RSL K_{oc}*0.001	7.7E+00	SSL K_{oc}*0.001	1.7E+02	Average K_{oc}*f_{oc}	3.9E-03	EPA RSL 2010	2.6E-03	EPA SSL 1996	3.3E-03	Average
7440-62-2	1-Methylnaphthalene	2.5E+03	EPI Suite 2010	--	--	--	--	2.5E+03	Average	2.5E+00	RSL K_{oc}*0.002	--	--	--	--	2.1E-02	EPA RSL 2011	--	--	2.1E-02	Average
91-57-6	2-Methylnaphthalene	2.5E+03	EPI Suite 2010	--	--	--	--	2.5E+03	Average	2.5E+00	RSL K_{oc}*0.003	--	--	--	--	2.1E-02	EPA RSL 2012	--	--	2.1E-02	Average
95-48-7	2-Methylphenol (o-cresol)	3.1E+02	EPI Suite 2010	9.1E+01	EPA SSL 1996	--	--	2.0E+02	Average	3.1E-01	RSL K_{oc}*0.001	9.1E-02	SSL K_{oc}*0.001	4.0E+00	Average K_{oc}*f_{oc}	4.9E-05	EPA RSL 2010	4.9E-05	EPA SSL 1996	4.9E-05	Average
106-44-5	4-Methylphenol (p-cresol)	3.0E+02	EPI Suite 2010	--	--	--	--	3.0E+02	Average	3.0E-01	RSL K_{oc}*0.001	--	--	6.0E+00	Average K_{oc}*f_{oc}	4.1E-05	EPA RSL 2010	--	--	4.1E-05	Average
91-20-3	Naphthalene	1.5E+03	EPI Suite 2010	1.2E+03	EPA SSL 1996	2.0E+03	Cal/EPA	1.6E+03	Average	1.5E+00	RSL K_{oc}*0.001	1.2E+00	SSL K_{oc}*0.001	3.2E+01	Average K_{oc}*f_{oc}	1.8E-02	EPA RSL 2010	2.0E-02	EPA SSL 1996	1.9E-02	Average
85-01-8	Phenanthrene	--	--	--	--	--	--	--	--		--	--	--	--	--	--	--	--	--	--	--
108-95-2	Phenol	1.9E+02	EPI Suite 2010	2.9E+01	EPA SSL 1996	--	--	1.1E+02	Average	1.9E-01	RSL K_{oc}*0.001	2.9E-02	SSL K_{oc}*0.001	2.2E+00	Average K_{oc}*f_{oc}	1.4E-05	EPA RSL 2010	1.6E-05	EPA SSL 1996	1.5E-05	Average
129-00-0	Pyrene	5.4E+04	EPI Suite 2010	6.8E+04	EPA SSL 1996	--	--	6.1E+04	Average	5.4E+01	RSL K_{oc}*0.001	6.8E+01	SSL K_{oc}*0.001	1.2E+03	Average K_{oc}*f_{oc}	4.9E-04	EPA RSL 2010	4.5E-04	EPA SSL 1996	4.7E-04	Average
Polychlorinated Biphenyls (PCBs)																					
53469-21-9	Aroclor 1016/1242	7.8E+04	EPI Suite 2010	--	--	--	--	7.8E+04	Average	7.8E+01	RSL K_{oc}*0.001	--	--	1.6E+03	Average K_{oc}*f_{oc}	7.8E-03	EPA RSL 2010	--	--	7.8E-03	Average
12672-29-6	Aroclor 1248	7.7E+04	EPI Suite 2010	--	--	--	--	7.7E+04	Average	7.7E+01	RSL K_{oc}*0.002	--	--	--	--	1.8E-02	EPA RSL 2010	--	--	1.8E-02	Average
11097-69-1	Aroclor 1254	1.3E+05	EPI Suite 2010	--	--	--	--	1.3E+05	Average	1.3E+02	RSL K_{oc}*0.001	--	--	2.6E+03	Average K_{oc}*f_{oc}	1.2E-02	EPA RSL 2010	--	--	1.2E-02	Average
37324-23-2	Aroclor 1260	3.5E+05	EPI Suite 2010	8.2E+05	EPA SSL 1996	--	--	5.8E+05	Average	3.5E+02	RSL K_{oc}*0.001	8.2E+02	SSL K_{oc}*0.001	1.2E+04	Average K_{oc}*f_{oc}	1.4E-02	EPA RSL 2010	--	--	1.4E-02	Average
1336-36-3	Total PCBs	7.8E+04	EPI Suite 2010	3.1E+05	EPA SSL 1996	--	--	1.9E+05	Average	7.8E+01	RSL K_{oc}*0.001	3.1E+02	SSL K_{oc}*0.001	3.9E+03	Average K_{oc}*f_{oc}	7.8E-03	EPA RSL 2010	--	--	7.8E-03	Average

Notes:

1 If VF is not available (i.e., is presented as "--" in table), this term simplifies to one divided by the particulate emission factor (1/PEF).
2 BCFs derived from Meylan, et al., 1999 (in EPA Human Health Risk Assessment Protocol for Hazardous Waste Combustion Facilities [HHRAP] Guidance, 2005, EPA520-R-05-006).
3 BCFs derived from CLARC database, originally sourced from EPA Ambient Water Quality Criteria (AWQC Gold Book, 1986). EPA 440/5-86-001.
4 In general, EPA BCFs are from the HHRAP summary; most of these were calculated using the method of Meylan, et al., 1999 (refer to Note 1); emperical values from other studies may be more appropirate for specific sites.
5 A site-specific f_{oc} was developed for Boeing Plant 2 using areas with no or limited organic contamination to represent the actual fraction of organic carbon present in the alluvial soils; this value is 0.02.
6 The provisional toxicity factors for this chemical are semi-quantative and should be used for screening purposes only.
7 McCarthy, John F. and Braulio D. Jimenez. 1985. Reduction in Bioavailibility to Bluegills of Polycylic Aromatic Hydrocarbons Bound to Dissolved Humic Material. Environmental Toxicology and Chemistry Vol. 4: 511-521.

Abbreviations:

AWQC Ambient Water Quality Criteria
BCF Bioconcentration factor
CAS Chemical abstract number
CLARC Cleanup Levels and Risk Calculation
EPA U.S. Environmental Protection Agency
EPA RSL 2010 Regional Screening Levels, November 2010; http://www.epa.gov/region9/superfund/prg/.
EPA SSL 1996 Supplemental Guidance for Developing Soil Screening Levels for Superfund Sites, EPA540/R-96/018, June 1996
EPI Suite EPA Estimation Program Interface Suite located online at http://www.epa.gov/oppt/exposure/pubs/episuite.htm
f_{oc} Soil fraction of organic carbon
GI Gastrointestinal
HHRAP Human Health Risk Assessment Protocol
K_d Distribution coeffiecient
K_{oc} Soil organic carbon-water partitioning coefficient
MTCA Model Toxics Control Act
PEF Particulate emission factor; specific factors are presented in associated tables in this attachment.
R10 Region 10
RSL Regional screening level
SSL Soil screening level
VF Volatilization factor

Table A.3h
Toxicological Factors

		EPA R10[1]												Ecology[2]											
		Oral/Ingestion Toxicity Factors				Dermal Toxicity Factors[3]				Inhalation Toxicity Factors				Oral/Ingestion Toxicity Factors				Dermal Toxicity Factors[4]				Inhalation Toxicity Factors			
CAS Number	Chemical	Cancer Slope Factor (CSF_o) (kg-day/mg)	Source	Reference Dose (RfD_o) (mg/kg-day)	Source	Cancer Slope Factor (CSF_d) (kg-day/mg)	Source	Reference Dose (RfD_d) (mg/kg-day)	Source	Inhalation Unit Risk (IUR) ($\mu g/m^3$)	Source	Reference Concentration (RfC_i) (mg/m^3)	Source	Cancer Potency Factor (CPF_o) (kg-day/mg)	Source	Reference Dose (RfD_o) (mg/kg-day)	Source	Cancer Potency Factor (CPF_d) (kg-day/mg)	Source	Reference Dose (RfD_d) (mg/kg-day)	Source	Cancer Potency Factor (CPF_i) (kg-day/mg)	Source	Reference Dose (RfD_i) (mg/kg-day)	Source
Semivolatile Organic Compounds (SVOCs)																									
83-32-9	Acenaphthene	--	--	6.0E-02	IRIS	--	--	6.0E-02	RfD_o*GI-abs	--	--	--	--	--	--	6.0E-02	IRIS	--	--	3.0E-02	RfD_o*GI-abs	--	--	--	--
208-96-8	Acenaphthylene	--	--	--	--	--	--	--	--	--	--	--	--	--	--	--	--	--	--	--	--	--	--	--	--
120-12-7	Anthracene	--	--	3.0E-01	IRIS	--	--	3.0E-01	RfD_o*GI-abs	--	--	--	--	--	--	3.0E-01	IRIS	--	--	1.5E-01	RfD_o*GI-abs	--	--	--	--
191-24-2	Benzo(g,h,i)perylene	--	--	--	--	--	--	--	--	--	--	--	--	--	--	--	--	--	--	--	--	--	--	--	--
117-81-7	Bis(2-ethylhexyl)phthalate	1.4E-02	IRIS	2.0E-02	IRIS	1.4E-02	CPF_o/GI-abs	2.0E-02	RfD_o*GI-abs	2.4E-06	--	--	--	1.4E-02	IRIS	2.0E-02	IRIS	2.8E-02	CPF_o/GI-abs	1.0E-02	RfD_o*GI-abs	--	--	--	--
85-68-7	Butylbenzyl phthalate	1.9E-03	PPRTV	2.0E-01	IRIS	1.9E-03	CPF_o/GI-abs	2.0E-01	RfD_o*GI-abs	--	--	--	--	1.9E-03	PPRTV	2.0E-01	IRIS	3.8E-03	CPF_o/GI-abs	1.0E-01	RfD_o*GI-abs	--	--	2.0E-01	HEAST
59-50-7	4-chloro-3-methylphenol	--	--	1.0E-01	PPRTV	--	--	1.0E-01	RfD_o*GI-abs	--	--	--	--	--	--	1.0E-01	PPRTV	--	--	5.0E-02	RfD_o*GI-abs	--	--	--	--
132-64-9	*Dibenzofuran*[5]	--	--	*1.0E-03*	*PPRTV-x*	--	--	--	--	--	--	--	--	--	--	--	--	--	--	--	--	--	--	--	--
84-74-2	Di-n-butylphthalate	--	--	1.0E-01	IRIS	--	--	1.0E-01	RfD_o*GI-abs	--	--	--	--	--	--	1.0E-01	IRIS	--	--	5.0E-02	RfD_o*GI-abs	--	--	--	--
84-66-2	Diethylphthalate	--	--	8.0E-01	IRIS	--	--	8.0E-01	RfD_o*GI-abs	--	--	--	--	--	--	8.0E-01	IRIS	--	--	4.0E-01	RfD_o*GI-abs	--	--	--	--
105-67-9	2,4-Dimethylphenol	--	--	2.0E-02	IRIS	--	--	2.0E-02	RfD_o*GI-abs	--	--	--	--	--	--	2.0E-02	IRIS	--	--	1.0E-02	RfD_o*GI-abs	--	--	--	--
131-11-3	Dimethylphthalate	--	--	--	--	--	--	--	--	--	--	--	--	--	--	--	--	--	--	--	--	--	--	--	--
117-84-0	Di-n-octyl phthalate	--	--	--	--	--	--	--	--	--	--	--	--	--	--	--	--	--	--	--	--	--	--	--	--
206-44-0	Fluoranthene	--	--	4.0E-02	IRIS	--	--	4.0E-02	RfD_o*GI-abs	--	--	--	--	--	--	4.0E-02	IRIS	--	--	2.0E-02	RfD_o*GI-abs	--	--	--	--
86-73-7	Fluorene	--	--	4.0E-02	IRIS	--	--	4.0E-02	RfD_o*GI-abs	--	--	--	--	--	--	4.0E-02	IRIS	--	--	2.0E-02	RfD_o*GI-abs	--	--	--	--
7440-62-2	1-Methylnaphthalene	2.9E-02	PPRTV	7.0E-02	ATDSR	2.9E-02	CPF_o/GI-abs	7.0E-02	RfD_o*GI-abs	--	--	--	--	2.9E-02	PPRTV	--	--	5.8E-02	CPF_o/GI-abs	--	--	--	--	--	--
91-57-6	2-Methylnaphthalene	--	--	4.0E-03	IRIS	--	--	4.0E-03	RfD_o*GI-abs	--	--	--	--	--	--	4.0E-03	IRIS	--	--	2.0E-03	RfD_o*GI-abs	--	--	--	--
95-48-7	2-Methylphenol (o-cresol)	--	--	5.0E-02	IRIS	--	--	5.0E-02	RfD_o*GI-abs	--	--	--	--	--	--	5.0E-02	IRIS	--	--	2.5E-02	RfD_o*GI-abs	--	--	--	--
106-44-5	4-Methylphenol (p-cresol)	--	--	5.0E-03	IRIS	--	--	5.0E-03	RfD_o*GI-abs	--	--	--	--	--	--	5.0E-03	IRIS	--	--	2.5E-03	RfD_o*GI-abs	--	--	--	--
91-20-3	Naphthalene	--	--	2.0E-02	IRIS	--	--	2.0E-02	RfD_o*GI-abs	3.4E-05	Cal/EPA	3.0E-03	IRIS	--	--	2.0E-02	IRIS	--	--	1.0E-02	RfD_o*GI-abs	--	--	8.6E-04	IRIS
85-01-8	Phenanthrene	--	--	--	--	--	--	--	--	--	--	--	--	--	--	--	--	--	--	--	--	--	--	--	--
108-95-2	Phenol	--	--	3.0E-01	IRIS	--	--	3.0E-01	RfD_o*GI-abs	--	--	--	--	--	--	3.0E-01	IRIS	--	--	1.5E-01	RfD_o*GI-abs	--	--	--	--
129-00-0	Pyrene	--	--	3.0E-02	IRIS	--	--	3.0E-02	RfD_o*GI-abs	--	--	--	--	--	--	3.0E-02	IRIS	--	--	1.5E-02	RfD_o*GI-abs	--	--	--	--
Polychlorinated Biphenyls (PCBs)																									
53469-21-9	Aroclor 1016/1242	2.0E+00	IRIS	--	--	2.0E+00	CPF_o/GI-abs	--	--	--	--	--	--	2.0E+00	IRIS	--	--	4.0E+00	CPF_o/GI-abs	--	--	--	--	--	--
12672-29-6	Aroclor 1248	2.0E+00	IRIS	--	--	2.0E+00	CPF_o/GI-abs	--	--	--	--	--	--	2.0E+00	IRIS	--	--	4.0E+00	CPF_o/GI-abs	--	--	--	--	--	--
11097-69-1	Aroclor 1254	2.0E+00	IRIS	2.0E-05	IRIS	2.0E+00	CPF_o/GI-abs	2.0E-05	RfD_o*GI-abs	--	--	--	--	2.0E+00	IRIS	2.0E-05	IRIS	4.0E+00	CPF_o/GI-abs	1.0E-05	RfD_o*GI-abs	--	--	--	--
37324-23-2	Aroclor 1260	2.0E+00	IRIS	--	--	2.0E+00	CPF_o/GI-abs	--	--	--	--	--	--	2.0E+00	IRIS	--	--	4.0E+00	CPF_o/GI-abs	--	--	--	--	--	--
1336-36-3	Total PCBs	2.0E+00	IRIS	--	--	2.0E+00	CPF_o/GI-abs	--	--	--	--	--	--	2.0E+00	IRIS	--	--	4.0E+00	CPF_o/GI-abs	--	--	2.0E+00	HEAST	--	--

Notes:

1 Toxicity factors are from the November 2010 EPA RSL Tables unless otherwise noted.
2 Toxicity factors from Ecology were taken from CLARC on January 30, 2011; then updated to include all IRIS changes. PPRTV were also incorporated where it was clear what value would be used. Values from ATSDR, Cal/EPA, and NJDEP were not used.
3 EPA dermal toxicity factors are calculated based on the oral toxicity factors as follows: $CSF_d = CSF_o$/GI-abs; $RfD_d = RfD_o$ x GI-abs. GI-abs is the gastrointestinal absorption conversion factor, which is equal to 1.0 except where otherwise specified (usually only for metals).
4 MTCA dermal toxicity factors are calculated based on the oral toxicity factors as follows: $CSF_d = CSF_o$/GI-abs; $RfD_d = RfD_o$ x GI-abs. GI-abs is the gastrointestinal absorption conversion factor, which is equal to 0.5 for SVOCs (see Equations 740-4 and 740-5).
5 The provisional toxicity factors for this chemical are semi-quantative and should be used for screening purposes only.

Abbreviations:

ATSDR	Agency for Toxic Substances and Disease Registry.
Cal/EPA	California Environmental Protection Agency.
CLARC	Cleanup Levels and Risk Calculation.
CSF and CPF	The terms "cancer slope factor" and "cancer potency factor" are interchangeable.
Ecology	Washington State Department of Ecology.
EPA	U.S. Environmental Protection Agency.
HEAST	Health Effects Assessment Summary Tables.
IRIS	Integrated Risk Information System.
NJDEP	New Jersey Department of Environmental Protection.
PPRTV	Provisional Peer Reviewed Toxicity Value.
PPRTV-x	Semi-quantitative value; see note 5 above.
R10	Region 10.
Rfd and RfC	The terms "Reference factor Dose" and "Reference factor Concentration" are not interchangeable. The former is expressed as a dose (mg/kg-day) while the later is a concentrations (mg/unit volume of media).
VOC	Volatile organic compound.

Table A.4a
Soil Standards, Criteria, and Risk-based Calculations

		Residential		Industrial		Sediment Protection	Groundwater Protection	EPA Proposed Soil TMCL to Protect All Pathways	
		EPA	Ecology	EPA Modified	Ecology	Ecology	Ecology		
CAS Number	Chemical[1]	EPA RSL Residential Includes Ingestion, Dermal, and Inhalation[2] (mg/kg)	MTCA Method B Unrestricted Land Use Includes CLARC Toxicity Factors[3] (mg/kg)	EPA RSL Industrial Includes Ingestion, Dermal, and Inhalation[4] (mg/kg)	MTCA Method C Industrial Land Use Includes CLARC Toxicity Factors[3] (mg/kg)	SMS Sediment Quality Standards[5] (mg/kg dry weight)	Soil Level to Protect Groundwater Using Three-phase Model[6] (mg/kg)	(mg/kg)	Exposure Pathway Basis of TMCL
56-55-3	Benzo(a) anthracene					1.1E+02			
50-32-8	Benzo(a) pyrene					9.9E+01			
205-99-2	Benzo (b) fluoranthene[7]					2.3E+02			
207-08-9	Benzo(k) fluoranthene[7]					2.3E+02			
218-01-9	Chrysene					1.1E+02			
53-70-3	Dibenz(a,h)anthracene					1.2E+01			
193-39-5	Indeno(1,2,3-cd)pyrene					3.4E+01			
--	Benzo(a)pyrene TEQ[8]	1.5E-02	1.4E-01	1.4E+00	1.8E+01	--	5.7E-02	1.5E-02	EPA RSL Residential with Early Life Correction.

Notes:

Washington state regulates carcinogenic polycyclic aromatic hydrocarbons using the benzo(a)pyrene Toxic Equivalent; therefore, no individual soil cleanup levels have been developed, and the cells are "grayed out." Refer to https://fortress.wa.gov/ecy/clarc/FocusSheets/tef.pdf. This is consistent with EPA's philosophy of using relative potency factors. EPA has approved the use of Ecology's TEFs for this site.

1 Not all chemicals are constituents needing TMCLs at Boeing Plant 2.
2 EPA RSL calculations with early life correction were calculated using EPA toxicity factors and exposure parameters as presented in associated tables in this attachment.
3 MTCA Method B uses WAC 173-340-740, equations 740-1 and 740-2; MTCA Method C uses WAC-173-340-745, equations 745-1 and 745-2 (Ecology 2007); specific parameters are presented in associated tables in this attachment.
4 EPA RSL calculations using EPA toxicity factors and exposure parameters as presented in associated tables in this attachment. EPA RSL Worker scenario has been modified to a 1 in 100,000 excess individual lifetime cancer risk and a soil ingestion rate of 200 mg/kg-day by an EPA Region 10 risk management decision.
5 Sediment Management Standards Sediment Quality Standards Chemical Criteria (dry weight) (WAC-173-204-320[a]).
6 Soil to Groundwater cleanup values are based on the MTCA fixed parameter three-phase partitioning model (WAC 173-340-747, equation 747-1), using partitioning factors presented in associated tables in this attachment.
7 SMS SQS of 2.3E+02 is for the sum of all benzofluoranthene congeners, including benzo(b)fluoranthene, benzo(k)fluoranthene, and benzo(j)fluoranthene.
8 Because the cPAHs in this table are considered mutagenic by EPA, EPA RSL calculations included an early life correction.

Abbreviations:

CAS Chemical abstract number
CLARC Cleanup Levels and Risk Calculation
cPAH Carcinogenic polycyclic aromatic hydrocarbon
Ecology Washington State Department of Ecology
EPA U.S. Environmental Protection Agency
MTCA Model Toxics Control Act
RSL Regional screening level
SMS Sediment Management Standards
SQS Sediment Quality Standards
TEQ Toxic Equivalent

Table A.4b
Groundwater Standards, Criteria, and Risk-based Calculations

		Protection of Drinking Water[2]				Protection of Aquatic Species						Protection of Human Health for Consumption of Fish and Shellfish in Marine Waters				EPA Proposed TMCL for Surface Water and Groundwater Discharging to Surface Water in the Lower Duwamish Waterway	
		Drinking Water Standard/Criteria[3]				Freshwater Standards			Marine Standards								
		Federal Primary Drinking Water Standards[4]	EPA RSL Tap Water Criteria[5]	State Primary Drinking Water Standards[6]	MTCA B Groundwater Cleanup Level[7]	Federal National Toxics Rule[8]	Federal Ambient Water Quality Criteria[9, 10]	Washington Surface Water Quality Standards[10, 11]	Federal National Toxics Rule[8]	Federal Ambient Water Quality Criteria[9]	Washington Surface Water Quality Standards[10, 11]	Federal National Toxics Rule[8]	Federal Ambient Water Quality Criteria[9]	Lowest of Tribal and Asian/Pacific Islander Exposure Scenarios[11, 12]	MTCA Method B Surface Water[11, 13]		
		EPA MCLs		Washington MCLs		Chronic	Chronic	Chronic	Chronic	Chronic	Chronic	Organism Only			Fish/Shellfish		
CAS Number	Chemical[1]	(µg/L)	(µg/L)	(µg/L)	(µg/L)	(µg/L)	(µg/L)	(µg/L)	(µg/L)	(µg/L)	(µg/L)	(µg/L)			(µg/L)	(µg/L)	Exposure Pathway Basis of TMCL
56-55-3	Benzo(a) anthracene	--	2.9E-02			--	--	--	--	--	--	3.1E-02	1.8E-02	1.8E-03	2.9E-02	1.8E-03	EPA R10 Tribal Consumption of Seafood.
50-32-8	Benzo(a) pyrene	2.0E-01	2.9E-03			--	--	--	--	--	--	3.1E-02	1.8E-02	1.8E-04	2.9E-03	1.8E-04	EPA R10 Tribal Consumption of Seafood.
205-99-2	Benzo (b) fluoranthene	--	2.9E-02			--	--	--	--	--	--	3.1E-02	1.8E-02	1.8E-03	2.9E-02	1.8E-03	EPA R10 Tribal Consumption of Seafood.
207-08-9	Benzo(k) fluoranthene	--	2.9E-01			--	--	--	--	--	--	3.1E-02	1.8E-02	1.8E-03	2.9E-02	1.8E-03	EPA R10 Tribal Consumption of Seafood.
218-01-9	Chrysene	--	2.9E+00			--	--	--	--	--	--	3.1E-02	1.8E-02	1.8E-02	2.9E-01	1.8E-02	EPA R10 Tribal Consumption of Seafood.
53-70-3	Dibenz(a,h)anthracene	--	2.9E-03			--	--	--	--	--	--	3.1E-02	1.8E-02	1.8E-03	2.9E-02	1.8E-03	EPA R10 Tribal Consumption of Seafood.
193-39-5	Indeno(1,2,3-cd)pyrene	--	2.9E-02			--	--	--	--	--	--	3.1E-02	1.8E-02	1.8E-03	2.9E-02	1.8E-03	EPA R10 Tribal Consumption of Seafood.
--	Benzo(a)pyrene TEQ	2.0E-01	2.9E-03	2.0E-01	1.2E-02	--	--	--	--	--	--	3.1E-02	1.8E-02	1.8E-04	2.9E-03	1.8E-04	EPA R10 Tribal Consumption of Seafood.

Notes:

Washington state regulates carcinogenic polycyclic aromatic hydrocarbons using the benzo(a)pyrene Toxic Equivalent; therefore, no individual soil cleanup levels have been developed, and the cells are "grayed out." Refer to https://fortress.wa.gov/ecy/clarc/FocusSheets/tef.pdf. This is consistent with EPA's philosophy of using relative potency factors. EPA has approved the use of Ecology's TEFs for this site.

1 Not all chemicals are constituents needing TMCLs at Boeing Plant 2.
2 Drinking water standards/criteria are not applicable to Boeing Plant 2 unless no other applicable standard exists for a constituent needing a TMCL in groundwater
3 The standards are potentially applicable to groundwater that may be used for drinking water supplies. Ecology determines the maximum beneficial use of groundwater, which may or may not include drinking
4 National Primary Drinking Water Regulations, Maximum Contaminant Levels (MCLs); http://water.epa.gov/drink/contaminants/index.cfm
5 EPA RSL, Residential Tapwaters; http://www.epa.gov/region9/superfund/prg/.
6 Washington Primary Drinking Water Standards WAC 246-290-130, Maximum Contaminant Levels (MCLs).
7 Standard MTCA Method B uses WAC 173-340-740; equations 730-1 and 730-2 (Ecology 2007). Parameters and toxicity factors can be found in associated tables in this attachment.
8 National Toxics Rule (NTR), 40 CFR 131.36.
9 EPA Ambient Water Quality Criteria (AWQCs), Clean Water Action Section 304.
10 Washington Surface Water Quality Standards; WAC 173-201A, Surface Water Quality Criteria.
11 EPA and Ecology fish consumption scenarios are based on MTCA Method B Surface Water Equations (equations 730-1 and 730-2); however, they use different exposure assumptions. Details are given in associated tables in this attachment
12 This column uses the approach described in note 8, but selects the lower concentrations that are protective of special populations including Tribal and Asian/Pacific Islander; the lowest concentration is always associated with Tribal exposure
13 This column is included for comparison only and is based on the default exposure scenario in MTCA 173-340-730.

Abbreviations:

CAS Chemcial abstract number
cPAH Carcinogenic polycyclic aromatic hydrocarbon
Ecology Washington State Department of Ecology
EPA U.S. Environmental Protection Agency
MTCA Model Toxics Control Act
R10 Region 10
RSL Regional screening level
TEQ Toxic Equivalent

Table A.4c
Soil Calculations

		Direct Contact Exposures										Protection of Groundwater	
		Ecology Default Calculations		EPA RSL Calculations with Site-specific Factors				EPA RSL Calculations with Site-specific Factors				MTCA Three-phase Model for Unsaturated Soils	
		Residential	Industrial	Residential Exposure[1]				Worker Exposure[2]					
		MTCA Method B with CLARC Values	MTCA Method C with CLARC Values	Cancer Risk with EPA RSL Calculations, Parameters, and Toxicity Factors				Cancer Risk with EPA RSL Calculations, Parameters, and Toxicity Factors				Groundwater Target to be Protected[3]	Three-phase Partitioning Between Soil, Soil Vapor, and Groundwater using MTCA Equation[4]
CAS Number	Chemical	Cancer (mg/kg)	Cancer (mg/kg)	Ingestion (mg/kg)	Dermal (mg/kg)	Inhalation (mg/kg)	TOTAL (mg/kg)	Ingestion (mg/kg)	Dermal (mg/kg)	Inhalation (mg/kg)	TOTAL (mg/kg)	(µg/L)	(mg/kg)
56-55-3	Benzo(a)anthracene	1.4E+00	1.8E+02	2.0E-01	5.3E-01	1.2E+04	1.5E-01	2.0E+01	4.6E+01	1.6E+06	1.4E+01	1.8E-03	2.0E-01
50-32-8	Benzo(a)pyrene	1.4E-01	1.8E+01	2.0E-02	5.3E-02	1.2E+03	1.5E-02	2.0E+00	4.6E+00	1.6E+05	1.4E+00	1.8E-04	5.7E-02
205-99-2	Benzo(b)fluoranthene	1.4E+00	1.8E+02	2.0E-01	5.3E-01	1.2E+04	1.5E-01	2.0E+01	4.6E+01	1.6E+06	1.4E+01	1.8E-03	6.6E-01
207-08-9	Benzo(k)fluoranthene[5]	1.4E+00	1.8E+02	2.0E-01	5.3E-01	1.2E+04	1.5E-01	2.0E+01	4.6E+01	1.6E+06	1.4E+01	1.8E-03	6.5E-01
218-01-9	Chrysene[5]	1.4E+01	1.8E+03	2.0E+00	5.3E+00	1.2E+05	1.5E+00	2.0E+02	4.6E+02	1.6E+07	1.4E+02	1.8E-02	2.1E+00
53-70-3	Dibenz(a,h)anthracene[5]	1.4E+00	1.8E+02	2.0E-01	5.3E-01	1.2E+04	1.5E-01	2.0E+01	4.6E+01	1.6E+06	1.4E+01	1.8E-03	1.4E+00
193-39-5	Indeno(1,2,3-cd)pyrene	1.4E+00	1.8E+02	2.0E-01	5.3E-01	1.2E+04	1.5E-01	2.0E+01	4.6E+01	1.6E+06	1.4E+01	1.8E-03	2.0E+00
--	Benzo(a)pyrene TEQ	1.4E-01	1.8E+01	2.0E-02	5.3E-02	1.2E+03	1.5E-02	2.0E+00	4.6E+00	1.6E+05	1.4E+00	1.8E-04	5.7E-02

Notes:

1 Because cPAHs in this table are considered mutagenic by EPA, EPA RSL calculations include an early life exposure correction.
2 EPA RSL Worker scenario has been modified to a 1 in 100,000 excess individual lifetime cancer risk and a soil ingestion rate of 200 mg/kg-day by an EPA Region 10 risk management decision.
3 Refer to Table A.4b, Groundwater Standards, Criteria, and Risk-based Calculations, of this attachment.
4 Soil to Groundwater cleanup values are based on the MTCA fixed parameter three-phase partitioning model (WAC 173-340-747, equation 747-1), using partitioning factors presented in associated tables in this attachment.
5 Ecology Toxic Equivalent Factor (TEF) multipliers were used for all calculations, including both EPA and Ecology equations. This decision is the source of the difference in calculated values between published EPA RSL cleanup levels and EPA RSL cleanup levels in this workbook for benzo(k)fluoranthene, chrysene, and dibenz(a,h)anthracene.

Abbreviations:

CAS Chemical abstract number
CLARC Cleanup Levels and Risk Calculation
Ecology Washington State Department of Ecology
EPA U.S. Environmental Protection Agency
MTCA Model Toxics Control Act
RSL Regional screening level
TEQ Toxic Equivalent

Table A.4d
Soil Equations and Parameters

Ecology — **Soil Cleanup Levels from Cancer Risk for Ingestion Only**

Equation 740-2 Cancer

$$\text{Soil Cleanup Level (mg/kg)} = \frac{(RISK \times ABW \times AT \times UCF)}{(CPF_o \times SIR \times AB1 \times ED \times EF)}$$

RISK = Acceptable excess individual lifetime cancer risk level (unitless)
ABW = Average body weight (kg) over the exposure duration
AT = Averaging time (years)
UCF = Unit conversion factor (mg/kg)
CPF_o = Carcinogenic potency factor (kg-day/mg)
SIR = Soil ingestion rate (mg/day)
AB1 = Gastrointestinal absorbtion fraction (unitless)
ED = Exposure duration (years)
EF = Exposure frequency (fraction of time)

Exposure Scenarios	RISK (unitless)	ABW (kg)	AT (years)	CPF_o (kg-day/mg)	SIR (mg/day)	AB1 (unitless)	ED (years)	EF (unitless)	Assumptions for Unitless EF Term: hours/day (unitless)	days/week (unitless)	weeks/year (unitless)
DEFAULT MTCA Method B	1.00E-06	16	75	<table>	200	1	6	1.00	24	7	52
DEFAULT MTCA Method C	1.00E-05	70	75	<table>	50	1	20	0.40	24	7	52

EPA RSL — **Soil Screening level from Cancer Risk for Residents and Workers (Mutagenic Compound)**

$$\text{Soil Screening Level (mg/kg)} = \frac{1}{\frac{1}{SSL_{SOIL\text{-}MU\text{-}ING}} + \frac{1}{SSL_{SOIL\text{-}MU\text{-}DER}} + \frac{1}{SSL_{SOIL\text{-}MU\text{-}INH}}}$$

< ---------- Ingestion of Soil Term ----------> < ------ Dermal Contact with Soil Term -------> < ---------- Inhalation of Dust ---------->

$$SSL_{SOIL\text{-}MU\text{-}ING} = \frac{TR \times AT}{CSF_o \times EF \times IFSM \times UCF1} \quad \text{where} \quad IFSM = \frac{ED_{0\text{-}2} \times IRS_c \times 10}{BW_c} + \frac{ED_{2\text{-}6} \times IRS_c \times 3}{BW_a} + \frac{ED_{6\text{-}16} \times IRS_a \times 3}{BW_a} + \frac{ED_{16\text{-}30} \times IRS_a \times 1}{BW_a}$$

$$= \sum \frac{ED \times IRS \times ADAF}{BW}$$

$$SSL_{SOIL\text{-}MU\text{-}DER} = \frac{TR \times AT}{CSF_d \times EF \times DFSM \times ABS_d \times UCF1} \quad \text{where} \quad DFSMadj = \frac{ED_{0\text{-}2} \times SA_c \times AF_c \times 10}{BW_c} + \frac{ED_{2\text{-}6} \times SA_c \times AF_c \times 3}{BW_c} + \frac{ED_{6\text{-}16} \times SA_a \times AF_a \times 3}{BW_a} + \frac{ED_{16\text{-}30} \times SA_a \times AF_a \times 1}{BW_a}$$

$$= \sum \frac{ED \times SA \times AF \times ADAF}{BW}$$

$$SSL_{SOIL\text{-}MU\text{-}INH} = \frac{TR \times AT}{UCF2 \times EF \times ET \times UCF3 \times \sum (ED \times IUR \times ADAF) \times [(1/PEF) + (1/VF)]} \quad \text{where} \quad \sum (ED \times IUR \times ADAF) = IUR \times (ED_{0\text{-}2} \times 10 + ED_{2\text{-}6} \times 3 + ED_{6\text{-}16} \times 3 + ED_{16\text{-}70} \times 1)$$

$$= \frac{1}{\sum (ED \times IUR \times ADAF) \times [1/VF + 1/PEF]} \times \frac{TR \times AT}{UCF2 \times EF \times ET \times UCF3}$$

$$= \frac{1}{\sum (IUR) \times [1/VF + 1/PEF]} \times \frac{TR \times AT}{UCF2 \times EF \times ET \times UCF3 \times \sum (ED \times ADAF)}$$

TR = Target excess individual lifetime cancer risk (unitless)
AT = Averaging Time in days = 365 day/year * Lifetime (years)
LT = Lifetime (years)
CSF_o = Oral cancer slope factor (kg-day/mg)
CSF_d = Dermal cancer slope factor (kg-day/mg)
EF = Exposure frequency (days/year)
ET = Exposure time (hours/day)
IFSM = Resident soil ingestion rate - age-adjusted for mutanegic compounds (mg-year/kg-day)
IRS = Ingestion rate soil (mg/day)
ED = Exposure duration (years)
BW = Body weight (age dependent) (kg; age dependent)
ADAF = Age dependent adjustment factor (unitless)
UCF1 = 1.0E-6 kg/mg
DFSM = Resident soil dermal contact factor: age-adjusted for mutagenic compounds(mg-year/kg-day)
SA = Skin surface area (cm^2/day; age dependent)
AF = Adherence factor (mg/cm^2)
ABS = Skin absorption factor (0.13 for cPAHs)
UCF2 = 1,000 (µg/mg)
UCF3 = 1/24 (day/hours)
IUR = Inhalation unit risk
PEF = Particulate emission factor used for dusts
VF = Volatilization factor used for volatile organic chemicals

Source: http://www.epa.gov/reg3hwmd/risk/human/rb-concentration_table/usersguide.htm

Exposure Scenarios	TR (unitless)	AT (days)	LT (years)	CSF_o (kg-day/mg)	CSF_d (kg-day/mg)	EF (days/year)	ET (hours/day)	IFSM (mg-year/kg-day)	IRS (mg-year/kg-day)	ED (years)	∑ ED x ADAF (years)	BW (kg)	ADAF (unitless)	DFSM (mg-year/kg-day)	SA (cm^2/day)	AF (mg/cm^2)	ABS (unitless)	IUR ($m^3/\mu g$)	PEF (m^3/kg)	VF (m^3/kg)	1/VF+1/PEF (kg/m^3)
EPA RSL Resident	1.00E-06	25,550	70	<table>	<table>	350	24	4.9E+02			76			1.4E+03			<table>	<table>	1.40E+09	<table>	<table>
Contribution between ages 0 - 2								2.7E+02	200	2	20	15	10	7.5E+02	2,800	0.2					
Contribution between ages 2 - 6								1.6E+02	200	4	12	15	3	4.5E+02	2,800	0.2					
Contribution between ages 6 - 16								4.3E+01	100	10	30	70	3	1.7E+02	5,700	0.07					
Contribution between ages 16 - 30								2.0E+01	100	14	14	70	1	8.0E+01	5,700	0.07					
Modified EPA RSL Worker[1,2]	1.00E-05	25,550	70	<table>	<table>	250	8	7.1E+01	200	25	25	70	1	2.4E+02	3,300	0.2	<table>	<table>	1.40E+09	<table>	<table>

Table A.4d
Soil Equations and Parameters

Ecology — **Three-phase Partitioning Between Soil, Soil Vapor, and Groundwater Using MTCA Equation**

Equation 747-1

$$\text{Soil Concentration (mg/kg)} = [C_s = C_W \times UCF \times DF \times \left(K_d + \frac{(\theta_w + \theta_a H_{cc})}{\rho_b} \right) = C_W \times UCF \times DF + \frac{C_W \times UCF \times DF \times \theta_w}{\rho_b} + \frac{C_W \times UCF \times DF \times \theta_a \times H_{cc}}{\rho_b} = C_W * (C1*K_d + C2 + C3*H_{cc})$$

where $C1 = UCF \times DF$

$C2 = \frac{UCF \times DF \times \theta_w}{\rho_b}$

$C3 = \frac{UCF \times DF \times \theta_a}{\rho_b}$

C_w = Ground water cleanup level established under WAC 173-340-720 (µg/L)
UCF = 1/1,000 (mg/µg)
DF = Dilution factor (dimensionless)
K_d = Distribution coefficient (L/kg)
θ_W = Water-filled soil porosity (ml water/ml soil)
θ_a = Air-filled soil porosity (ml air/ml soil)
H_{cc} = Henry's Law Constant (dimensionless)
ρ_b = Dry soil bulk density (kg/L)

Exposure Scenarios	C_w (µg/L)	DF (unitless)	K_d (L/kg)	θ_w (ml water/ ml soil)	θ_a (ml air/ ml soil)	H_{cc} (unitless)	ρ_b (kg/L)	C1 (mg/µg)	C2 (L-ml water/ ml soil)	C3 (L-ml air/ ml soil)
Soil Concentration for Saturated Soil	<table>	20	<table>	0.3	0.13	<table>	1.5	2.0E-02	4.0E-03	1.7E-03

Notes:

Indicates no value is required in calculations for the associated exposure scenario indicated.
<table> Indicates a chemical-specific factor is available in the associated tables of this attachment.
1 EPA RSL Worker scenario has been modified to a 1 in 100,000 excess individual lifetime cancer risk and a soil ingestion rate of 200 mg/kg-day by an EPA Region 10 risk management decision.
2 Exposure frequency taken to be 250 days/year. This value was selected based on Region 9 EPA RSL tables last updated November 2010, which uses parameters associated with an indoor worker to calculate risk.

Abbreviations:

EPA U.S. Environmental Protection Agency
MTCA Model Toxics Control Act
RSL Regional screening level
SSL Soil screening level

Subscripts:

CA Cancer
DER Dermal
ING Ingestion
INH Inhalation
MU Mutagenic

Table A.4e
Groundwater Calculations

		Surface Water to Fish Consumption Pathway							Drinking Water Pathways	
		EPA Calculations	Ecology MTCA Calculations		Proposed Water to Fish Consumption TMCLs				EPA	MTCA
		Tribal Consumption Includes EPA BCFs and Toxicity Factors[1]	Default Without Early Life Adjustment Includes EPA BCFs and Toxicity Factors[2]	Asian/Pacific Islander Consumption with Early Life Includes EPA BCFs and Toxicity Factors[3]	MTCA Default Adult Exposure Using EPA and Toxicity Factor[2]		Tribal and/or Asian/Pacific Islander Modified to Use EPA Toxicity and Partitioning Coefficients		EPA RSL Tap Water[4]	MTCA Method B Groundwater to Protect Drinking Water Use[5]
CAS Number	Chemical	(µg/L)	(µg/L)	(µg/L)	TMCL (µg/L)	Source (µg/L)	TMCL (µg/L)	Source (µg/L)	(µg/L)	(µg/L)
56-55-3	Benzo(a) anthracene	1.8E-03	2.9E-02	3.7E-03	2.9E-02	MTCA B	1.8E-03	Tribal	2.9E-02	1.2E-01
50-32-8	Benzo(a) pyrene	1.8E-04	2.9E-03	3.7E-04	2.9E-03	MTCA B	1.8E-04	Tribal	2.9E-03	1.2E-02
205-99-2	Benzo (b) fluoranthene	1.8E-03	2.9E-02	3.7E-03	2.9E-02	MTCA B	1.8E-03	Tribal	2.9E-02	1.2E-01
207-08-9	Benzo(k) fluoranthene	1.8E-03	2.9E-02	3.7E-03	2.9E-02	MTCA B	1.8E-03	Tribal	2.9E-01	1.2E-01
218-01-9	Chrysene	1.8E-02	2.9E-01	3.7E-02	2.9E-01	MTCA B	1.8E-02	Tribal	2.9E+00	1.2E+00
53-70-3	Dibenz(a,h)anthracene	1.8E-03	2.9E-02	3.7E-03	2.9E-02	MTCA B	1.8E-03	Tribal	2.9E-03	1.2E-01
193-39-5	Indeno(1,2,3-cd)pyrene	1.8E-03	2.9E-02	3.7E-03	2.9E-02	MTCA B	1.8E-03	Tribal	2.9E-02	1.2E-01
--	Benzo(a)pyrene TEQ	1.8E-04	2.9E-03	3.7E-04	2.9E-03	MTCA B	1.8E-04	Tribal	2.9E-03	1.2E-02

Notes:

1 MTCA Method B, equations 730-1 and 730-2 modified to apply Tribal fish ingestion rates, body weights, and exposure duration (Ecology 2007). Refer to associated tables in this attachment for toxicity factors, bioconcentration factors, and exposure parameters. Modified to include early life exposure.

2 MTCA Method B equations 730-1 and 730-2 modified to apply Asian/Pacific Islander fish ingestion rates, body weights, and exposure duration (Ecology 2007). Refer to associated tables in this attachment for toxicity factors, bioconcentration factors, and exposure parameters. Does not include early life exposure.

3 MTCA Method B equations 730-1 and 730-2 modified to apply Asian/Pacific Islander fish ingestion rates, body weights, and exposure duration (Ecology 2007). Refer to associated tables in this attachment for toxicity factors, bioconcentration factors, and exposure parameters. Modified to include early life exposure.

4 EPA RSL, Residential Tapwaters; http://www.epa.gov/region9/superfund/prg/.

5 MTCA Method B equations 720-1 and 720-2; groundwater cleanup levels to protect drinking water use.

Abbreviations:

BCF Bioconcentration factor
CAS Chemical abstract number
Ecology Washington State Department of Ecology
EPA U.S. Environmental Protection Agency
MTCA Model Toxics Control Act
RSL Regional screening level
TEQ Toxic Equivalent

Table A.4f
Groundwater Equations and Parameters

Surface Water to Fish Consumption by Humans: Cancer

$$\text{Surface Water Cleanup or Screening Level (µg/L)} = \frac{(RISK \times BW \times UCF1 \times UCF2 \times AT)}{(CPF_o \times BCF \times FCR \times FDF \times ED)}$$

Risk = Target excess individual lifetime cancer risk level (unitless)
BW = Average body weight (kg)
UCF1 = 1,000 g/mg
UCF2 = 1,000 g/L
AT = Averaging time (years)
CPF_o = Cancer potency factor (kg-day/mg)
BCF = Bioconcentration factor (L/kg)
FCR = Fish consumption rate (g/day)
FDF = Fish diet fraction (unitless)
ED = Exposure duration (years)

Exposure Scenarios	Risk (unitless)	BW (kg)	AT (years)	CPF_o (kg-day/mg)	BCF (L/kg)	FCR (g/day)	FDF (unitless)	ED (years)
MTCA Default[1]	1.00E-06	70	75	<table>	<table>	54	0.50	30

Surface Water to Fish Consumption by Humans: Cancer Adjusted for Early-life Exposure[2]

$$\text{Surface Water Cleanup or Screening Level (µg/L)} = \frac{(RISK \times UCF1 \times UCF2 \times AT)}{CPF_o \times [BCF \times \sum(FCR/ABW \times EF \times ED \times ADAF)]}$$

where

$$\sum \frac{FCR \times EF \times ED \times ADAF}{BW} = \frac{FCR_{0\text{-}2} \times EF \times ED_c \times 10}{BW_c} + \frac{FCR_{2\text{-}6} \times EF \times ED_c \times 3}{BW_c} + \frac{FCR_{6\text{-}16} \times EF \times ED_a \times 3}{BW_a} + \frac{FCR_{16\text{-}70} \times EF \times ED_a \times 1}{BW_a}$$

Risk = Target excess individual lifetime cancer risk level (unitless)
BW = Average body weight (kg)
UCF1 = 1,000 µg/mg
UCF2 = 1,000 g/kg
AT = Averaging Time in days = 365 day/year * Lifetime (years)
CPF_o = Cancer potency factor (kg-day/mg)
BCF = Bioconcentration factor (L/kg)
FCR = Fish consumption rate (g/day)
FDF = Fish diet fraction (unitless)
EF = Exposure frequency (days/year)
ED = Exposure duration (years)
ADAF = Age-dependent adjustment factor (unitless)

Exposure Scenarios	Risk (unitless)	BW (kg)	AT (days)	LT (years)	CPF_o (kg-day/mg)	BCF (L/kg)	FCR (g/day)	EF (days/year)	ED (years)	ADAF (unitless)
Tribal Consumption[3, 4]	1.00E-06		25,550	70	<table>	<table>		350		
Contribution from ages 0 -2		15					38.8		2	10
Contribution from ages 2 -6		15					38.8		4	3
Contribution from ages 6 - 16		81.8					97.1		10	3
Contribution from ages 16 - 70		81.8					97.1		54	1
API Consumption[4, 5]	1.00E-06		25,550	70	<table>	<table>		350		
API Exposure 0-2 years		15					23		2	10
API Exposure 2 - < 6 years		15					23		4	3
API Exposure 6 - < 16 years		63					57.1		10	3
API Exposure 16 - < 70 years		63					57.1		14	1

Groundwater (as Drinking Water) Cleanup Levels: Cancer

$$\text{Groundwater Cleanup or Screening Level (µg/L)} = \frac{(RISK \times BW \times UCF \times AT)}{(CPF_o \times DWIR \times INH \times DWF \times ED)}$$

Risk = Target excess individual lifetime cancer risk level (unitless)
BW = Average body weight (kg)
UCF = 1,000 µg/mg
AT = Averaging time (years)
CPF_o = Cancer potency factor (kg-day/mg)
DWIR = Drinking water ingestion rate (L/day)
INH = Inhalation correction factor (unitless)
DWF = Drinking water fraction (unitless)
ED = Exposure duration (years)

Exposure Scenarios	Risk (unitless)	BW (kg)	AT (years)	CPF_o (kg-day/mg)	DWIR (L/day)	INH (unitless)	DWF (unitless)	ED (years)
MTCA Default[1]	1.00E-06	70	75	<table>	2	1	1.00	30

Notes:

Indicates no value is required in calculations for the associated exposure scenario indicated.
<table> Indicates a chemical-specific factor is available in the associated tables of this attachment.
1 All parameters derived from Model Toxics Control Act (MTCA) WAC 173-340-730, equations 730-1 and 730-2.
2 Supplemental Guidance for Assessing Susceptibility from Early-life Exposure to Carcinogens. U.S. Environmental Protection Agency (EPA), Washington, DC, EPA/630/R-03/003F (2005).
3 All parameters derived from EPA Region 10 Framework for Selecting and Using Tribal Fish and Shellfish Consumption Rates for Risk-based Decision Making (2007).
4 Fish consumption rates include both finfish and shellfish, and exclude salmon.
5 Fish consumption rates derived from Washington State Department of Ecology (Ecology). MTCA Regulation Update Summary, Fish Consumption Rates for High Exposure Populations (2009).

Abbreviations:

API Asian/Pacific Islander
MTCA Model Toxics Control Act

Table A.4g
Cross-media Factors

		Other Chemical Factors					Bioconcentration Factors							
		EPA R10					EPA R10		Ecology MTCA/CLARC		Others		Selected for Use[4]	
CAS Number	Chemical	GI Absorption Conversion Factor (GI) (unitless)	Dermal Absorption Fraction (ABS_d) (unitless)	Volatilization Factor (VF) (m^3/kg)	Source For Preceeding Factors	(1/VF + 1/PEF)[1] (kg/m^3)	Water to Fish BCF[2] (L/kg)	Source	Water to Fish BCF[3] (L/kg)	Source	Water to Fish BCF (L/kg)	Source	Water to Fish BCF (L/kg)	Source
56-55-3	Benzo(a) anthracene	1	0.13	--	EPA RSL 2010	7.1E-10	4.9E+03	HHRAP	30	AWQC Gold Book	3.0E+02	Use B(a)P	3.0E+02	Use B(a)P
50-32-8	Benzo(a) pyrene (B(a)P)	1	0.13	--	EPA RSL 2010	7.1E-10	8.3E+03	HHRAP	30	AWQC Gold Book	3.0E+02	McCarthy 1985[6]	3.0E+02	McCarthy 1985[6]
205-99-2	Benzo (b) fluoranthene	1	0.13	--	EPA RSL 2010	7.1E-10	1.0E+04	HHRAP	30	AWQC Gold Book	3.0E+02	Use B(a)P	3.0E+02	Use B(a)P
207-08-9	Benzo(k) fluoranthene	1	0.13	--	EPA RSL 2010	7.1E-10	9.9E+03	HHRAP	30	AWQC Gold Book	3.0E+02	Use B(a)P	3.0E+02	Use B(a)P
218-01-9	Chrysene	1	0.13	--	EPA RSL 2010	7.1E-10	4.9E+03	HHRAP	30	AWQC Gold Book	3.0E+02	Use B(a)P	3.0E+02	Use B(a)P
53-70-3	Dibenz(a,h)anthracene	1	0.13	--	EPA RSL 2010	7.1E-10	2.0E+04	HHRAP	30	AWQC Gold Book	3.0E+02	Use B(a)P	3.0E+02	Use B(a)P
193-39-5	Indeno(1,2,3-cd)pyrene	1	0.13	--	EPA RSL 2010	7.1E-10	2.4E+04	HHRAP	30	AWQC Gold Book	3.0E+02	Use B(a)P	3.0E+02	Use B(a)P
--	Total Benzo(a)pyrene TEQ	1	0.13	--	Use B(a)P	7.1E-10	8.3E+03	Use B(a)P	30	Use B(a)P	3.0E+02	Use B(a)P	3.0E+02	Use B(a)P

Table A.4g
Cross-media Factors

		Soil Organic Carbon to Water Partitioning Coefficient (K_{oc})						Soil to Water Partitioning Coefficient ($K_d = K_{oc} \times f_{oc}$)						Water to Air Partitioning					
		EPA R10		Ecology MTCA/CLARC		Selected for Use		EPA R10		Ecology MTCA/CLARC		Selected for Use[5]		EPA R10		Ecology MTCA/CLARC		Selected for Use	
CAS Number	Chemical	K_{oc} (L/kg)	Source	K_{oc} (L/kg)	Source	K_{oc} (L/kg)	Source	K_d (L/kg)	Source	K_d (L/kg)	Source	K_d (L/kg)	Source	Henry's Law Constant (H_{cc}) (unitless)	Source	Henry's Law Constant (H_{cc}) (unitless)	Source	Henry's Law Constant (H_{cc}) (unitless)	Source
56-55-3	Benzo(a) anthracene	1.8E+05	EPA RSL 2010	3.6E+05	EPA SSL 1996	2.7E+05	Average	1.8E+02	RSL K_{oc}*0.001	3.6E+02	SSL K_{oc}*0.001	5.4E+03	Average K_{oc}*0.02	4.9E-04	EPA RSL 2010	1.4E-04	EPA SSL 1996	3.2E-04	Average
50-32-8	Benzo(a) pyrene (B(a)P)	5.9E+05	EPA RSL 2010	9.7E+05	EPA SSL 1996	7.8E+05	Average	5.9E+02	RSL K_{oc}*0.001	9.7E+02	SSL K_{oc}*0.001	1.6E+04	Average K_{oc}*0.02	1.9E-05	EPA RSL 2010	4.6E-05	EPA SSL 1996	3.2E-05	Average
205-99-2	Benzo (b) fluoranthene	6.0E+05	EPA RSL 2010	1.2E+06	EPA SSL 1996	9.0E+05	Average	6.0E+02	RSL K_{oc}*0.001	1.2E+03	SSL K_{oc}*0.001	1.8E+04	Average K_{oc}*0.02	2.7E-05	EPA RSL 2010	4.6E-03	EPA SSL 1996	2.3E-03	Average
207-08-9	Benzo(k) fluoranthene	5.9E+05	EPA RSL 2010	1.2E+06	EPA SSL 1996	8.9E+05	Average	5.9E+02	RSL K_{oc}*0.001	1.2E+03	SSL K_{oc}*0.001	1.8E+04	Average K_{oc}*0.02	2.4E-05	EPA RSL 2010	3.4E-05	EPA SSL 1996	2.9E-05	Average
218-01-9	Chrysene	1.8E+05	EPA RSL 2010	4.0E+05	EPA SSL 1996	2.9E+05	Average	1.8E+02	RSL K_{oc}*0.001	4.0E+02	SSL K_{oc}*0.001	5.8E+03	Average K_{oc}*0.02	2.1E-04	EPA RSL 2010	3.9E-03	EPA SSL 1996	2.1E-03	Average
53-70-3	Dibenz(a,h)anthracene	1.9E+06	EPA RSL 2010	1.8E+06	EPA SSL 1996	1.9E+06	Average	1.9E+03	RSL K_{oc}*0.001	1.8E+03	SSL K_{oc}*0.001	3.7E+04	Average K_{oc}*0.02	5.8E-06	EPA RSL 2010	6.0E-07	EPA SSL 1996	3.2E-06	Average
193-39-5	Indeno(1,2,3-cd)pyrene	2.0E+06	EPA RSL 2010	3.5E+06	EPA SSL 1996	2.7E+06	Average	2.0E+03	RSL K_{oc}*0.001	3.5E+03	SSL K_{oc}*0.001	5.5E+04	Average K_{oc}*0.02	1.4E-05	EPA RSL 2010	6.6E-05	EPA SSL 1996	4.0E-05	Average
--	Total Benzo(a)pyrene TEQ	5.9E+05	Use B(a)P	9.7E+05	Use B(a)P	7.8E+05	Use B(a)P					1.6E+04	Use B(a)P					3.2E-05	Use B(a)P

Notes:

EPA and Ecology have not selected final values for either the distribution coefficient (Kd) or Henry's Law Constant for benzo(a)pyrene TEQ.

1 If VF is not available (i.e., is presented as "--" in table), this term simplifies to one divided by the particulate emission factor (1/PEF).

2 BCFs derived from Meylan, et al. (1999) (in EPA Human Health Risk Assessment Protocol for Hazardous Waste Combustion Facilities [HHRAP] Guidance, 2005, EPA520-R-05-006).

3 BCFs derived from CLARC database, originally sourced from EPA Quality Criteria for Water (AWQC Gold Book 1986), EPA 440/5-86-001.

4 In general, the EPA BCFs are from the HHRAP summary; most of these are calculated using the method of Meylan, et al. 1999 (refer to Note 1); emperical values from other studies may be more appropirate for specific sites.

5 A site-specific f_{oc} was developed for Boeing Plant 2 using areas with no or limited organic contamination to represent the actual fraction of organic carbon present in the alluvial soils; this value is 0.02.

6 McCarthy, John F. and Braulio D. Jimenez. 1985. Reduction in Bioavailibility to Bluegills of Polycylic Aromatic Hydrocarbons Bound to Dissolved Humic Material. Environmental Toxicology and Chemistry Vol. 4: 511-521.

Abbreviations:

BCF Bioconcentration factor
CAS Chemical abstract number
CLARC Cleanup Levels and Risk Calculation
cPAH Carcinogenic polycyclic aromatic hydrocarbon
Ecology Washington State Department of Ecology
EPA U.S. Environmental Protection Agency
EPA RSL 2010 Regional Screeining Levels, November 2010; http://www.epa.gov/region9/superfund/prg/
EPA SSL 1996 Supplemental Guidance for Developing Soil Screening Levels for Superfund Sites, EPA540/R-96/018, July 1996
f_{oc} Soil fraction of organic carbon
MTCA Model Toxics Control Act
R10 Region 10
RSL Regional screening level
TEQ Toxic Equivalent Quantity
VF Volitilization Factor

Table A.4h
Toxicological Factors

CAS Number	Chemical	Toxicity Equivalent Factor (TEF)[1]		EPA R10[2]						Ecology[3]					
				Oral/Ingestion Toxicity Factors		Dermal Toxicity Factors[4]		Inhalation Toxicity Factors		Oral/Ingestion Toxicity Factors		Dermal Toxicity Factors[5]		Inhalation Toxicity Factors	
		(unitless)	Source	Cancer Slope Factor (CSF_o) (kg-day/mg)	Source	Cancer Slope Factor (CSF_d) (kg-day/mg)	Source	Inhalation Unit Risk (IUR) ($m^3/\mu g$)	Source	Cancer Potency Factor (CPF_o) (kg-day/mg)	Source	Cancer Potency Factor (CPF_d) (kg-day/mg)	Source	Cancer Potency Factor (CPF_i) (kg-day/mg)	Source
56-55-3	Benzo(a) anthracene	0.1	WAC 173-340-900	7.3E-01	B(a)P IRIS * TEQ	7.3E-01	CPF_o/GI-abs	1.1E-04	B(a)P IRIS * TEQ	7.3E-01	B(a)P IRIS * TEQ	1.5E+00	CPF_o/GI-abs	6.1E-01	--
50-32-8	Benzo(a) pyrene (B(a)P)	1	WAC 173-340-901	7.3E+00	IRIS	7.3E+00	CPF_o/GI-abs	1.1E-03	IRIS	7.3E+00	IRIS	1.5E+01	CPF_o/GI-abs	6.1E+00	HEAST
205-99-2	Benzo (b) fluoranthene	0.1	WAC 173-340-902	7.3E-01	B(a)P IRIS * TEQ	7.3E-01	CPF_o/GI-abs	1.1E-04	B(a)P IRIS * TEQ	7.3E-01	B(a)P IRIS * TEQ	1.5E+00	CPF_o/GI-abs	6.1E-01	--
207-08-9	Benzo(k) fluoranthene	0.1	WAC 173-340-903	7.3E-01	B(a)P IRIS * TEQ	7.3E-01	CPF_o/GI-abs	1.1E-04	B(a)P IRIS * TEQ	7.3E-01	B(a)P IRIS * TEQ	1.5E+00	CPF_o/GI-abs	6.1E-01	--
218-01-9	Chrysene	0.01	WAC 173-340-904	7.3E-02	B(a)P IRIS * TEQ	7.3E-02	CPF_o/GI-abs	1.1E-05	B(a)P IRIS * TEQ	7.3E-02	B(a)P IRIS * TEQ	1.5E-01	CPF_o/GI-abs	6.1E-02	--
53-70-3	Dibenz(a,h)anthracene	0.1	WAC 173-340-905	7.3E-01	B(a)P IRIS * TEQ	7.3E-01	CPF_o/GI-abs	1.1E-04	B(a)P IRIS * TEQ	7.3E-01	B(a)P IRIS * TEQ	1.5E+00	CPF_o/GI-abs	6.1E-01	--
193-39-5	Indeno(1,2,3-cd)pyrene	0.1	WAC 173-340-906	7.3E-01	B(a)P IRIS * TEQ	7.3E-01	CPF_o/GI-abs	1.1E-04	B(a)P IRIS * TEQ	7.3E-01	B(a)P IRIS * TEQ	1.5E+00	CPF_o/GI-abs	6.1E-01	--
--	Total Benzo(a)pyrene TEQ	--	--	7.3E+00	Use B(a)P	7.3E+00	Use B(a)P	1.1E-03	Use B(a)P	7.3E+00	Use B(a)P	1.5E+01	Use B(a)P	6.1E+00	--

Notes:

1 Ecology Toxic Equivalency Factors (TEF) multipliers, as shown below, were used for all calculations, including both EPA and Ecology equations. This decision is the source of the difference in calculated values between published EPA RSL clean up levels and EPA RSL cleanup levels in this workbook for benzo(k)fluoranthene, chrysene, and dibenz(a,h)anthracene.

2 Toxicity factors are from the November 2010 EPA RSL Tables unless otherwise noted.

3 Toxicity factors from Ecology were taken from CLARC on January 30, 2011; then updated to include all IRIS changes. PPRTV were also incorporated where it was clear what value would be used. Values from ATSDR, Cal/EPA, and NJEPA were not used.

4 EPA dermal toxicity factors are calculated based on the oral toxicity factors as follows: $CSF_d = CSf_o$/GI-abs; $RfD_d = RfD_d$ x GI-abs. GI-abs is the gastrointestinal absorption conversion factor, which is equal to 1.0 except where otherwise specified (usually only for metals).

5 MTCA dermal toxicity factors are calculated based on the oral toxicity factors as follows: $CSF_d = CSf_o$/GI-abs; $RfD_d = RfD_d$ x GI-abs. GI-abs is the gastrointestinal absorption conversion factor, which is equal to 0.5 for Semivolatile organic compounds (see Equations 740-4 and 740-5).

Abbreviations:

ATSDR Agency for Toxic Substances and Disease Registry.
Cal/EPA California Environmental Protection Agency.
CLARC Cleanup Levels and Risk Calculation
CSF and CPF The terms "cancer slope factor" and "cancer potency factor" are interchangeable.
Ecology Washington State Department of Ecology.
EPA U.S. Environmental Protection Agency.
HEAST Health Effects Assessment Summary Tables.
IRIS Integrated Risk Information System.
NJDEP New Jersey Department of Environmental Protection.
PPRTV Provisional Peer Reviewed Toxicity Value.
R10 Region 10.
Rf_d and Rf_c The terms "Reference factor Dose" and "Reference factor Concentration" are not interchangeable. The former is expressed as a dose (mg/kg-day) while the later is a concentrations (mg/unit volume of media).
TEQ Toxic Equivalent Factor

Boeing Plant 2
Seattle, WA

Target Media Cleanup Levels Technical Memorandum

Attachment B
Frequency of Exceedance Tables and Scatter Plots

FINAL

Table of Contents

List of Tables

Table B.1a Frequency of Exceedance of TMCLs by Metals in Soil

Table B.1b Frequency of Exceedance of TMCLs by Semivolatile Organic Compounds in Soil

Table B.1c Frequency of Exceedance of TMCLs by Carcinogenic Polycyclic Aromatic Hydrocarbons and Polychlorinate Biphenyls in Soil

Table B.1d Frequency of Exceedance of TMCLs by Volatile Organic Compounds in Soil

Table B.1e Frequency of Exceedance of TMCLs by Total Petroleum Hydrocarbons in Soil

Table B.2a Frequency of Exceedance of TMCLs by Metals in Groundwater

Table B.2b Frequency of Exceedance of TMCLs by Semivolatile Organic Compounds in Groundwater

Table B.2c Frequency of Exceedance of TMCLs by Carcinogenic Polycyclic Aromatic Hydrocarbons and Polychlorinated Biphenyls in Groundwater

Table B.2d Frequency of Exceedance of TMCLs by Volatile Organic Compounds in Groundwater

Table B.2e Frequency of Exceedance of TMCLs by Total Petroleum Hydrocarbons in Groundwater

Table B.3a Frequency of Exceedance of TMCL by Constituents in Sediments

Table B.4a Frequency of Exceedance of TMCLs by Volatile Organic Compounds in Ambient Air

List of Figures

Figure B.1 Cobalt Concentration at Boeing Plant 2

Figure B.2 Iron Concentration Across Washington State

Figure B.3 Iron Concentration at Boeing Plant 2

Figure B.4 Manganese Concentration Across Washington State

Figure B.5 Manganese Concentration at Boeing Plant 2

Figure B.6 Molybdenum Concentration at Boeing Plant 2

Boeing Plant 2
Seattle, WA

Target Media Cleanup Levels Technical Memorandum

Attachment B
Frequency of Exceedance Tables and Scatter Plots

Tables

FINAL

Table B.1a
Frequency of Exceedance of TMCLs by Metals in Soil

CAS	Constituent	EPA Proposed Soil TMCL	Units	Number of Results	Number of Detected Results	Percent Detected	Number of Detected Results that Exceed Criteria[1]	Percent of Detected Results that Exceed Criteria[1]	Maximum Detected Value	Exceedance Factor[1]	Retained as COC[2]
Metals											
7429-90-5	Aluminum	7.7E+04	mg/kg	1,763	1,763	100%	10	0.6%	1.8E+05	2.3	No; detected exceedance < 10%, exceedance factor ≈ 2.0
7440-36-0	**Antimony**	3.1E+01	mg/kg	2,059	58	3%	15	0.7%	8.2E+02	26	**Yes**
7440-38-2	**Arsenic**	2.0E+01	mg/kg	2,341	822	35%	13	0.6%	2.9E+02	14	**Yes**
7440-39-3	**Barium**	1.0E+02	mg/kg	1,910	1,910	100%	71	3.7%	4.8E+03	48	**Yes**
7440-41-7	Beryllium	1.6E+02	mg/kg	2,203	1,713	78%			1.5E+00		No
18540-29-9	**Chromium (VI)**	1.2E+00	mg/kg	170	18	11%	5	2.9%	1.3E+03	1051	**Yes**
7440-48-4	**Cobalt[3]**	1.2E+01	mg/kg	1,718	1,717	100%	43	2.5%	1.9E+02	16	**Yes; Small localized hotspot within OA-1/OA-2**
7440-43-9	**Cadmium**	4.0E+00	mg/kg	2,383	557	23%	74	3.1%	3.7E+03	932	**Yes**
7440-50-8	**Copper**	8.0E+01	mg/kg	2,331	2,331	100%	54	2.3%	2.8E+04	350	**Yes**
7439-89-6	**Iron[4]**	5.9E+04	mg/kg	1,836	1,836	100%	13	0.7%	1.8E+05	3.0	**Yes; Small localized hotspot within OA-1/OA-2**
7439-92-1	**Lead**	2.5E+02	mg/kg	2,389	1,872	78%	43	1.8%	1.8E+04	72	**Yes**
7439-96-5	**Manganese[4]**	1.8E+03	mg/kg	1,889	1,889	100%	8	0.4%	6.9E+03	3.8	**Yes; Small localized hotspot within OA-1/OA-2**
7439-97-6	**Mercury as Elemental Mercury**	1.5E+00	mg/kg	2,320	707	30%	14	0.6%	3.8E+01	25	**Yes; Mercury retained. Specific form in soil not specified**
7487-94-7	**Mercury as Inorganic Mercury Salts**	2.3E+01	mg/kg	2,320	707	30%	2	0.1%	3.8E+01	1.6	
7439-98-7	**Molybdenum[3]**	2.0E+01	mg/kg	1,195	503	42%	8	0.7%	1.7E+02	8.2	**Yes; Small localized hotspot within OA-1/OA-2**
7440-02-0	**Nickel**	2.1E+02	mg/kg	2,242	2,241	100%	23	1.0%	2.1E+03	10	**Yes**
7782-49-2	**Selenium**	1.0E+00	mg/kg	2,247	58	3%	33	1.5%	9.0E+00	8.8	**Yes**
7440-22-4	Silver	1.7E+02	mg/kg	2,279	130	6%	4	0.2%	2.7E+02	1.6	No; detected exceedance < 10%, exceedance factor < 2.0
7440-31-5	Tin	4.7E+04	mg/kg	1,195	94	8%			7.6E+02		No
1314-62-1	Vanadium	7.0E+02	mg/kg	1,769	1,769	100%			1.1E+02		No
7440-66-6	**Zinc**	1.4E+03	mg/kg	2,338	2,338	100%	26	1.1%	2.6E+04	18	**Yes**
Other Inorganics											
57-12-5	**Cyanide (free)**	2.0E+01	mg/kg	972	222	23%	5	0.5%	4.6E+03	230	**Yes**

Notes:

Dark red text with dark background Indicates that constituent was retained as a constituent of concern.

1 Blank indicates that the no detected result exceeds the criteria.

2 EPA has approved the use of MTCA soil compliance rules for screening constituents in soil. Specifically, constituents with a frequency of detected exceedance less than ten percent and an exceedance factor less than 2.0 have not been carried forward in accordance with WAC 173-340-740(7)(e)(i-ii).

3 Scatter plots of cobalt and molybdenum data are presented to illustrate the occurance of localized exceedences.

4 For information on background concentrations of iron and manganese in Washington State and at Boeing Plant 2, please see associated scatter plots presented in this attachment.

Abbreviations:

CAS Chemical abstract number

COC Constituent of Concern

EPA U. S. Environmental Protection Agency

Table B.1b
Frequency of Exceedance of TMCLs by Semivolatile Organic Compounds in Soil

CAS	Constituent	EPA Proposed Soil TMCL[1]	Units	Number of Results	Number of Detected Results	Percent Detected	Number of Detected Results that Exceed Criteria[2]	Percent of Detected Results that Exceed Criteria[2]	Maximum Detected Value	Exceedance Factor[1]	Retained as COC[3]
Semivolatile Organic Compounds (SVOCs)											
83-32-9	Acenaphthene	2.3E+02	mg/kg	1,105	85	8%			5.3E+01		No
208-96-8	Acenaphthylene		mg/kg	1,104	55	5%			2.4E+02		No
120-12-7	Anthracene	1.6E+03	mg/kg	1,104	129	12%			2.4E+02		No
191-24-2	Benzo(g,h,i)perylene		mg/kg	1,104	227	21%			1.0E+02		No
117-81-7	**Bis(2-ethylhexyl)phthalate**	3.5E+01	mg/kg	1,020	171	17%	1	0.1%	3.3E+02	9.4	**Yes**
85-68-7	Butylbenzyl phthalate	1.7E+00	mg/kg	1,004	6	0.6%			1.6E-01		No
86-74-8	Carbazole	5.0E+01	mg/kg	964	13	1%			1.6E+01		No
59-50-7	4-chloro-3-methylphenol	7.4E+02	mg/kg	982	2	0.2%			1.3E+00		No
132-64-9	Dibenzofuran	1.2E+02	mg/kg	1,066	105	10%			5.8E+01		No
84-74-2	Di-n-butylphthalate	2.6E+01	mg/kg	1,004	60	6%			1.1E+00		No
84-66-2	Diethylphthalate	7.6E+02	mg/kg	1,004	38	4%			2.3E-01		No
105-67-9	2,4-Dimethylphenol	9.5E+01	mg/kg	1,004	2	0.2%			6.8E-02		No
131-11-3	Dimethylphthalate		mg/kg	1,004	2	0.2%			9.9E+00		No
117-84-0	Di-n-octyl phthalate		mg/kg	1,011	15	1%			7.7E+01		No
206-44-0	Fluoranthene	2.3E+02	mg/kg	1,105	379	34%	1	0.1%	4.1E+02	1.8	No; detected exceedance < 10%, exceedance factor < 2.0
86-73-7	Fluorene	1.5E+02	mg/kg	1,104	97	9%	1	0.1%	1.8E+02	1.2	No; detected exceedance < 10%, exceedance factor < 2.0
7440-62-2	**1-Methylnaphthalene**	1.6E+01	mg/kg	439	89	20%	5	1.1%	1.8E+02	11	**Yes**
91-57-6	2-Methylnaphthalene	2.3E+02	mg/kg	1,089	176	16%	1	0.1%	2.9E+02	1.3	No; detected exceedance < 10%, exceedance factor < 2.0
95-48-7	2-Methylphenol (o-cresol)	2.5E+02	mg/kg	1,004	2	0.2%			1.1E-01		No
106-44-5	4-Methylphenol (p-cresol)	4.1E+01	mg/kg	1,004	5	0.5%			3.6E-01		No
85-01-8	Phenanthrene		mg/kg	1,105	407	37%			9.4E+02		No
108-95-2	Phenol	1.9E+03	mg/kg	1,001	24	2%			5.5E+00		No
129-00-0	**Pyrene**	2.4E+02	mg/kg	1,105	405	37%	1	0.1%	5.5E+02	2.3	**Yes**

Notes:

Dark red text with dark background Indicates that constituent was retained as a constituent of concern.

1 Blank indicates that no TMCL was developed for the associated constituent.
2 Blank indicates that the no detected result exceeds the criteria.
3 EPA has approved the use of MTCA soil compliance rules for screening constituents in soil. Specifically, constituents with a frequency of detected exceedance less than ten percent and an exceedance factor less than 2.0 have not been carried forward in accordance with WAC 173-340-740(7)(e)(i-ii).

Abbreviations:

CAS Chemical abstract number
COC Constituent of Concern
EPA U. S. Environmental Protection Agency

Table B.1c
Frequency of Exceedance of TMCLs by Carcinogenic Polycyclic Aromatic Hydrocarbons and Polychlorinate Biphenyls in Soil

CAS	Constituent	EPA Proposed Soil TMCL[1]	Units	Number of Results	Number of Detected Results	Percent Detected	Number of Detected Results that Exceed Criteria[2]	Percent of Detected Results that Exceed Criteria[2]	Maximum Detected Value	Exceedance Factor[2]	Retained as COC[1]
Mutagenic Carcinogenic Polycyclic Aromatic Hydrocarbons (cPAHs)											
56-55-3	Benzo(a) anthracene		mg/kg	1,104	267	24%			2.0E+02		
50-32-8	Benzo(a) pyrene		mg/kg	1,104	247	22%			2.1E+02		
205-99-2	Benzo (b) fluoranthene		mg/kg	1,104	256	23%			1.0E+02		
207-08-9	Benzo(k) fluoranthene		mg/kg	1,104	233	21%			1.6E+02		
218-01-9	Chrysene		mg/kg	1,105	358	32%			2.4E+02		
53-70-3	Dibenz(a,h)anthracene		mg/kg	1,104	67	6%			3.3E+01		
193-39-5	Indeno(1,2,3-cd)pyrene		mg/kg	1,104	185	17%			8.3E+01		
	Benzo(a)pyrene TEQ[3,4]	1.5E-02	mg/kg	1,098	365	33%	194	18%	2.7E+02	18,000	**Yes**
Polychlorinated Biphenyls (PCBs)											
53469-21-9	**Aroclor 1016/1242**	7.2E-04	mg/kg	278	2	0.7%	2	0.7%	9.0E-01	1,250	**Yes**
12672-29-6	**Aroclor 1248**	2.2E-01	mg/kg	1,585	16	1.0%	7	0.4%	1.3E+02	591	**Yes**
11097-69-1	**Aroclor 1254**	2.9E-04	mg/kg	1,585	124	8%	124	7.8%	8.1E+01	279,310	**Yes**
37324-23-2	**Aroclor 1260**	5.4E-03	mg/kg	1,585	225	14%	225	14%	6.6E+02	122,222	**Yes**
1336-36-3	**Total PCBs**	1.8E-03	mg/kg	1,590	316	20%	316	20%	6.6E+02	366,667	**Yes**

Notes:

Dark red text with dark background Indicates that constituent was retained as a constituent of concern.

1 Blank indicates that no individual soil cleanup level has been developed for the associated constituent; therefore, the associated constituent was not retained as a contaminant of concern at Boeing Plant 2. This is because Washington state regulates carcinogenic polycyclic aromatic hydrocarbons using the benzo(a)pyrene Toxic Equivalent. Refer to https://fortress.wa.gov/ecy/clarc/FocusSheets/tef.pdf. This is consistent with EPA's philosophy of using relative potency factors.

2 Blank indicates that the no detected result exceeds the criteria.

3 Benzo(a)pyrene TEQ calculated using 1/2 the reporting limit as a surrogate for non-detected constituents when at least one constituent contributing to the TEQ was detected.

4 EPA has approved the use of Ecology's TEFs for this site.

Abbreviations:

CAS Chemical abstract number
COC Constituent of Concern
EPA U. S. Environmental Protection Agency
Ecology Washington State Department of Ecology
TEQ Toxic Equivalent
TEF Toxic Equivalency Factor

Table B.1d
Frequency of Exceedance of TMCLs by Volatile Organic Compounds in Soil

CAS	Constituent	EPA Proposed Soil TMCL	Units	Number of Results	Number of Detected Results[1]	Percent Detected[1]	Number of Detected Results that Exceed Criteria[2]	Percent of Detected Results that Exceed Criteria[2]	Maximum Detected Value[1]	Exceedance Factor[2]	Retained as COC[3]
Volatile Organic Constituents (VOCs) including pre-2005 data											
67-64-1	Acetone	5.1E+02	mg/kg	2,302	1,142	50%			5.8E+00		No
71-43-2	**Benzene**	9.3E-02	mg/kg	2,341	244	10%	10	0.4%	4.9E+01	526	**Yes**
78-93-3	2-Butanone (MEK)	4.3E+02	mg/kg	2,269	400	18%			3.4E+02		No
75-15-0	Carbon Disulfide	7.5E+01	mg/kg	2,305	402	17%			3.1E-01		No
56-23-5	Carbon Tetrachloride	2.1E-02	mg/kg	2,314	8	0.3%			1.5E-02		No
108-90-7	Chlorobenzene	2.6E+01	mg/kg	2,316	9	0.4%			1.9E+00		No
75-00-3	Chloroethane	2.8E+02	mg/kg	2,314	3	0.1%			4.1E-03		No
67-66-3	**Chloroform**	2.0E-01	mg/kg	2,316	55	2%	1	0.04%	2.0E-01	1.0	No; detected exceedance < 10%, exceedance factor < 2.0
74-87-3	Chloromethane	1.6E+00	mg/kg	2,314	5	0.2%			2.3E-02		No
106-43-4	4-Chlorotoluene	4.0E+02	mg/kg	1,520	1	0.1%			1.2E-03		No
95-50-1	1,2-Dichlorobenzene	6.8E+01	mg/kg	1,832	4	0.2%			5.5E-02		No
106-46-7	1,4-Dichlorobenzene	3.5E-01	mg/kg	1,832	7	0.4%			2.2E-01		No
75-34-3	**1,1-Dichloroethane**	7.1E-01	mg/kg	2,314	55	2%	1	0.04%	2.5E+00	3.5	**Yes**
107-06-2	1,2-Dichloroethane	7.0E-02	mg/kg	2,313	1	0.04%			3.5E-02		No
75-35-4	**1,1-Dichloroethene**	8.1E-02	mg/kg	2,316	17	1%	3	0.1%	1.7E+00	21	**Yes**
156-59-2	**cis-1,2-Dichloroethene**	2.6E+00	mg/kg	2,254	276	12%	13	0.6%	4.1E+02	159	**Yes**
156-60-5	trans-1,2-Dichloroethene	1.9E+01	mg/kg	2,260	73	3%			7.1E+00		No
78-87-5	1,2-Dichloropropane	9.2E-02	mg/kg	2,316							No
100-41-4	**Ethylbenzene**	2.3E-01	mg/kg	2,346	69	3%	25	1.1%	2.6E+02	1,121	**Yes**
98-82-8	Isopropylbenzene(cumene)	7.8E+01	mg/kg	1,520	11	0.7%			1.8E+01		No
591-78-6	2-Hexanone	3.2E+01	mg/kg	2,307	2	0.1%			1.1E-02		No
75-09-2	**Methylene Chloride**	6.5E-01	mg/kg	2,305	348	15%	3	0.1%	8.8E+00	14	**Yes**
108-10-1	Methyl Isobutyl Ketone	1.7E+02	mg/kg	2,309	14	0.6%			4.3E-02		No
91-20-3	**Naphthalene**	3.6E+00	mg/kg	3,844	360	9%	46	1.2%	5.2E+02	146	**Yes**
100-42-5	Styrene	6.3E+03	mg/kg	2,314	4	0.2%			4.0E-01		No
79-34-5	**1,1,2,2-Tetrachloroethane**	1.3E-02	mg/kg	2,316	1	0.04%	1	0.04%	1.7E-01	13	**Yes**
127-18-4	**Tetrachloroethene (PCE)**	1.6E-03	mg/kg	2,314	176	8%	137	5.9%	2.0E+01	12,560	**Yes**
108-88-3	**Toluene**	1.0E+02	mg/kg	2,346	408	17%	1	0.0%	6.5E+02	6.3	**Yes**
71-55-6	1,1,1-Trichloroethane	1.9E+03	mg/kg	2,314	87	4%			1.1E+02		No
79-00-5	**1,1,2-Trichloroethane**	7.3E-02	mg/kg	2,314	17	0.7%	1	0.04%	3.3E+00	45	**Yes**
79-01-6	**Trichloroethene (TCE)**	1.8E-02	mg/kg	2,324	780	34%	353	15%	1.1E+04	609,389	**Yes**
120-82-1	**1,2,4-trichlorobenzene**	8.0E-02	mg/kg	1,825	10	0.5%	5	0.3%	1.2E+00	15	**Yes**
75-69-4	Trichlorofluoromethane	2.0E+02	mg/kg	2,273	9	0.4%			2.4E-02		No
76-13-1	1,1,2-Trichlorotrifluoroethane	4.3E+02	mg/kg	2,270	36	2%			1.4E+02		No
75-01-4	**Vinyl chloride**	8.1E-05	mg/kg	2,323	58	2%	58	2.5%	1.8E+00	22,268	**Yes**
95-47-6	o-Xylene[4]	2.0E+02	mg/kg	1,674	26	2%			1.4E+01		No
179601-23-1	m,p-Xylene[4]	1.6E+02	mg/kg	1,662	58	3%	1	0.1%	2.2E+02	1.4	No; detected exceedance < 10%, exceedance factor < 2.0
10330-20-7	**Xylenes (total)[4]**	2.0E+02	mg/kg	678	89	13%	4	0.6%	1.4E+03	7.1	**Yes**

Notes:

Dark red text with dark background Indicates that constituent was retained as a constituent of concern at the point of compliance.

1 Blank indicates that constituent was not detected at Boeing Plant 2.
2 Blank indicates that the no detected result exceeds the criteria.
3 EPA has approved the use of MTCA soil compliance rules for screening constituents in soil. Specifically, constituents with a frequency of detected exceedance less than ten percent and an exceedance factor less than 2.0 have not been carried forward in accordance with WAC 173-340-740(7)(e)(i-ii).
4 Older data is reported as total xylenes, whereas newer data is reported as o-xylene and m,p-xylene. Some areas with total data do not have more recent isomer-specific data.

Abbreviations:

CAS Chemical abstract number
COC Constituent of Concern
EPA U. S. Environmental Protection Agency

Table B.1e
Frequency of Exceedance of TMCLs by Total Petroleum Hydrocarbons in Soil

CAS	Constituent[1]	EPA Proposed Soil TMCL	Units	Number of Results	Number of Detected Results	Percent Detected	Number of Detected Results that Exceed Criteria[2]	Percent of Detected Results that Exceed Criteria[2]	Maximum Detected Value	Exceedance Factor[2]	Retained as COC
Total Petroleum Hydrocarbons (TPH)											
86290-81-5	TPH - Gasoline (Benzene Present)	3.0E+01	mg/kg	838	98	12%	47	5.6%	2.5E+04	833	**Yes**
8008-20-6	TPH - Aged Gasoline & Mineral Spirits	1.0E+02	mg/kg	62	3	4.8%	2	3.2%	4.1E+03	41	**Yes**
64475-85-0	TPH - Diesel #2	1.0E+02	mg/kg	1,584	588	37%	59	3.7%	1.1E+05	1,100	**Yes**
68334-30-5	TPH - Heavy Oil	2.0E+03	mg/kg	1,234	493	40%	19	1.5%	6.2E+04	31	**Yes**

Notes:

Dark red text with dark background Indicates that constituent was retained as a constituent of concern at the point of compliance.

1 Petroleum hydrocarbons have been measured at Plant 2 over the years using a variety of methods and standards. Please see the table below to understand how each of the measurements of TPH have been compared to the TPH TMCLs.

2 Blank indicates that the no detected result exceeds the criteria.

Abbreviations:

CAS Chemical abstract number
COC Constituent of Concern
EPA U. S. Environmental Protection Agency

TPH Map Between Constituent and TMCL

Constituent	Regulatory Standard
TPH - Gasoline (Benzene Present)	TPH - Gasoline (Benzene Present)
TPH - Kerosene Range	TPH - Aged Gasoline & Mineral Spirits
TPH - Mineral Spirits Range	TPH - Aged Gasoline & Mineral Spirits
TPH - Diesel Range	TPH - Diesel #2
TPH - Bunker C	TPH - Heavy Oil
TPH - Motor Oil Range	TPH - Heavy Oil
TPH - Oil and Grease	TPH - Heavy Oil
TPH - Diesel + Oil Range	TPH - Diesel #2

Table B.2a
Frequency of Exceedance of TMCLs by Metals in Groundwater

CAS	Constituent	Units	EPA Proposed Groundwater TMCL[1]	Data from Shoreline Monitoring Wells: 2005-Present (Point of Compliance Wells)								Data from Upland Groundwater Wells: 2005-Present (All Uplands Wells)							
				Number of Results[2]	Number of Detected Results[3]	Percent Detected[3]	Number of Detected Results that Exceed Criteria[4]	Percent of Detected Results that Exceed Criteria[4]	Maximum Detected Value[3]	Exceedance Factor[4]	*COC in Groundwater* COCs at the Point of Compliance[5]	Number of Results	Number of Detected Results[3]	Percent Detected[3]	Number of Detected Results that Exceed Criteria[4]	Percent of Detected Results that Exceed Criteria[4]	Maximum Detected Value[3]	Exceedance Factor[4]	*Upgradient Potential COC* Constituents Present Upgradient of the Point of Compliance[5]
Dissolved Metals																			
7429-90-5	Aluminum	µg/L	8.7E+01	13	1	7.7%	1	7.7%	1.0E+02	1.1	No, 1 hit with minimal exceedance	610	248	41%	165	27%	2.5E+05	2,920	**Yes**
7440-36-0	Antimony	µg/L	1.5E+02	420	58	14%			1.1E+01		No	1,245	64	5.1%			6.0E+01		No
7440-38-2	**Arsenic**	µg/L	8.0E+00	420	345	82%	41	9.8%	2.6E+01	3.2	**Yes**	1,355	1,107	82%	211	16%	1.1E+03	139	**Yes**
7440-39-3	**Barium**	µg/L	1.2E+02	13	13	100%	4	31%	4.7E+02	3.8	**Yes**	598	566	95%	53	8.9%	6.2E+02	5	**Yes**
7440-41-7	Beryllium	µg/L	1.2E+01	420	3	0.7%			3.0E-01		No	1,246	6	0.5%			1.0E+01		No
18540-29-9	**Chromium (VI)**	µg/L	5.8E-01								No	12	1	8.3%	1	8.3%	1.2E+01	21	**Yes**
7440-48-4	**Cobalt**	µg/L	4.8E+00	13							No	601	53	8.8%	22	3.7%	9.5E+01	20	**Yes**
7440-50-8	**Copper**	µg/L	8.0E+00	420	220	52%	35	8.3%	4.3E+01	5.4	**Yes**	1,246	42	3.4%	41	3.3%	1.6E+02	21	**Yes**
7440-43-9	**Cadmium**	µg/L	2.5E-01	420	26	6.2%	26	6.2%	1.6E+02	656	**Yes**	1,243	691	56%	102	8.2%	1.4E+02	540	**Yes**
7439-89-6	**Iron**	µg/L	1.0E+03	290	218	75%	193	67%	2.2E+05	215	**Yes[6]**	1,132	1,013	89%	871	77%	1.2E+06	1210	**Yes[6]**
7439-92-1	**Lead**	µg/L	2.5E+00	420	3	0.7%	1	0.2%	4.0E+00	1.6	No; exceedance factor < 2.0; detected exceedence < 0.5%	1,246	19	1.5%	5	0.4%	1.2E+01	4.8	**Yes**
7439-96-5	**Manganese**	µg/L	2.0E+03	377	300	80%	40	10.6%	7.6E+03	3.8	**Yes[6]**	1,389	1,309	94%	196	14%	1.6E+04	8.1	**Yes[6]**
7439-97-6	Mercury as Elemental Mercury	µg/L	1.2E-02	420	3	0.7%	3	0.7%	4.7E-02	3.9	No[7]	1,242	25	2.0%	25	2.0%	7.0E+00	583	No[7]
7487-94-7	Mercury as Inorganic Mercury Salts	µg/L	4.8E+00	420	3	0.7%			4.7E-02		No	1,242	25	2.0%	1	0.1%	7.0E+00	1.5	No; exceedance factor < 2.0; detected exceedence < 0.5%
7439-98-7	Molybdenum	µg/L	8.0E+01	13	5	38%			3.0E+01		No	598	279	47%	1	0.2%	8.6E+01	1.1	No[8]
7440-02-0	**Nickel**	µg/L	8.2E+00	420	384	91%	62	15%	2.6E+02	31	**Yes**	1,251	1,106	88%	175	14%	2.6E+02	31	**Yes**
7782-49-2	**Selenium**	µg/L	5.0E+00	421	28	6.7%	10	2.4%	3.2E+02	64	**Yes; may need background**	1,247	101	8.1%	14	1.1%	3.2E+02	64	**Yes; may need background**
7440-22-4	**Silver**	µg/L	2.2E+01	420	20	4.8%	10	2.4%	7.3E+01	3.3	**Yes**	1,246	42	3.4%	10	0.8%	7.3E+01	3.3	**Yes**
7440-31-5	Tin	µg/L	9.6E+03	13	1	7.7%			1.0E+01		No	598	7	1.2%			2.0E+01		No
1314-62-1	**Vanadium**	µg/L	1.4E+02	420	232	55%			2.6E+01		No	1,240	793	64%	10	0.8%	6.7E+02	4.6	**Yes**
7440-66-6	**Zinc**	µg/L	5.6E+01	420	85	20%	41	9.8%	2.6E+03	46	**Yes**	1,246	288	23%	89	7.1%	1.2E+04	215	**Yes**
Metals, fraction not specified																			
18540-29-9	**Chromium (VI)**	µg/L	5.8E-01								No	13	2	15%	2	15%	1.5E+01	26	**Yes**
Other Inorganics																			
57-12-5	**Cyanide (free) - total**	µg/L	1.0E+00	7							No	284	51	18%	51	18%	5.0E+02	500	**Yes**
57-12-5	**Cyanide (free) - no fraction specified**	µg/L	1.0E+00	7							No	234	9	3.8%	9	3.8%	2.5E+02	248	**Yes**

Notes:

Dark red text with pale background — Indicates that constituent was retained as an upgradient potential constituent of concern but not as a constituent of concern at the point of compliance.

Dark red text with dark background — Indicates that constituent was retained as a constituent of concern at the point of compliance.

1 Blank indicates that no individual groundwater cleanup level has been developed for the associated constituent.
2 Blank indicates that no results are available for the associated constituent.
3 Blank indicates that constituent was not detected in this data set.
4 Blank indicates that the no detected result exceeds the criteria.
5 COCs may be added in the future depending on future sampling results.
6 May be dissolving from natural soils due to anaerobic groundwater conditions present on site.
7 Elemental mercury is not stable in groundwater; mercury in groundwater occurs as a soluble mercury salt.
8 In addition to being a minor exceedance, the TMCL for molybdenum is based on a surrogate value to protect drinking water (MTCA B groundwater standard to protect drinking water).

Abbreviations:

CAS Chemical abstract number
COC Constituent of Concern
EPA U. S. Environmental Protection Agency

Table B.2b
Frequency of Exceedance of TMCLs by Semivolatile Organic Compounds in Groundwater

				Data from Shoreline Monitoring Wells: 2005-Present (Point of Compliance Wells)								Data from Upland Groundwater Wells: 2005-Present (All Uplands Wells)							
CAS	Constituent	Units	EPA Proposed Groundwater TMCL[1]	Number of Results	Number of Detected Results[2]	Percent Detected[2]	Number of Detected Results that Exceed Criteria[3]	Percent of Detected Results that Exceed Criteria[3]	Maximum Detected Value[2]	Exceedance Factor[3]	*COC in Groundwater* COCs at the Point of Compliance[4]	Number of Results	Number of Detected Results[2]	Percent Detected[2]	Number of Detected Results that Exceed Criteria[3]	Percent of Detected Results that Exceed Criteria[3]	Maximum Detected Value[2]	Exceedance Factor[3]	*Upgradient Potential COC* Constituents Present Upgradient of the Point of Compliance[4]
Semivolatile Organic Compounds (SVOCs)																			
83-32-9	Acenaphthene	µg/L	1.2E+02	38	11	29%			2.6E+00		No	338	29	8.6%			1.0E+01		No
208-96-8	Acenaphthylene	µg/L		38							No	339	3	0.9%			1.3E+00		No
120-12-7	Anthracene	µg/L	2.0E+02	38	1	2.6%			1.2E-01		No	338	5	1.5%			1.7E+00		No
191-24-2	Benzo(g,h,i)perylene	µg/L		38							No	338	1	0.3%			1.4E+00		No
117-81-7	**Bis(2-ethylhexyl)phthalate**	µg/L	1.2E+00	38	2	5.3%	2	5.3%	2.4E+00	1.9	No[5]	338	35	10%	29	8.6%	3.5E+01	28	**Yes**
85-68-7	Butylbenzyl phthalate	µg/L	4.1E-01	38							No	338							No
86-74-8	Carbazole	µg/L	4.4E+00	38							No	338	3	0.9%	1	0.3%	4.7E+00	1.1	No; exceedance factor < 2.0; detected exceedence < 0.5%
59-50-7	4-chloro-3-methylphenol	µg/L	3.7E+03	38							No	338	2	0.6%			2.5E+03		No
132-64-9	Dibenzofuran	µg/L	3.2E+01	38	2	5.3%			1.5E-01		No	338	7	2.1%			5.0E+00		No
84-74-2	Di-n-butylphthalate	µg/L	4.7E+01	38							No	338	7	2.1%			1.2E+01		No
84-66-2	Diethylphthalate	µg/L	1.8E+04	38							No	338							No
105-67-9	2,4-Dimethylphenol	µg/L	6.6E+02	38							No	338	3	0.9%			9.7E+01		No
131-11-3	Dimethylphthalate	µg/L	1.1E+06	38							No	338							No
117-84-0	Di-n-octyl phthalate	µg/L		38							No	338	1	0.3%			1.5E+00		No
206-44-0	Fluoranthene	µg/L	1.1E+01	38	2	5.3%			3.3E-01		No	338	6	1.8%			3.3E-01		No
86-73-7	Fluorene	µg/L	4.5E+01	38	3	7.9%			1.2E+00		No	338	10	3.0%			1.9E+01		No
7440-62-2	1-Methylnaphthalene	µg/L	2.3E+00	33	2	6.1%			1.4E-01		No	253	11	4.3%	1	0.4%	3.7E+00	1.6	No; exceedance factor < 2.0; detected exceedence < 0.5%
91-57-6	2-Methylnaphthalene	µg/L	6.4E+01	38							No	336	8	2.4%			4.8E+01		No
95-48-7	2-Methylphenol (o-cresol)	µg/L	3.1E+03	38							No	338	2	0.6%			4.2E+00		No
106-44-5	4-Methylphenol (p-cresol)	µg/L	3.3E+02	38							No	338	3	0.9%			3.5E+01		No
85-01-8	Phenanthrene	µg/L		38	1	2.6%			3.1E-01		No	338	14	4.1%			1.6E+01		No
108-95-2	Phenol	µg/L	4.1E+04	38							No	338	1	0.3%			3.2E+00		No
129-00-0	Pyrene	µg/L	9.8E+00	38	2	5.3%			1.5E-01		No	338	6	1.8%			2.8E-01		No

Notes:

Dark red text with pale background	Indicates that constituent was retained as an upgradient potential constituent of concern but not as a constituent of concern at the point of compliance.
Dark red text with dark background	Indicates that constituent was retained as a constituent of concern at the point of compliance.

1 Blank indicates that no individual groundwater cleanup level has been developed for the associated constituent.
2 Blank indicates that constituent was not detected in this data set.
3 Blank indicates that the no detected result exceeds the criteria.
4 COCs may be added in the future depending on future sampling results.
5 Constituent was not carried forward as a constituent of concern because bis(2-ethylhexyl)phthalate is a common lab contaminant and the exceedence factor is less than 2.

Abbreviations:

CAS Chemical abstract number
COC Constituent of Concern
EPA U. S. Environmental Protection Agency

Table B.2c
Frequency of Exceedance of TMCLs by Carcinogenic Polycyclic Aromatic Hydrocarbons and Polychlorinated Biphenyls in Groundwater

				Data from Shoreline Monitoring Wells: 2005-Present (Point of Compliance Wells)								Data from Upland Groundwater Wells: 2005-Present (All Uplands Wells)							
CAS	Constituent	Units	EPA Proposed Groundwater TMCL[1]	Number of Results	Number of Detected Results[1]	Percent Detected[1]	Number of Detected Results that Exceed Criteria[1]	Percent of Detected Results that Exceed Criteria[1]	Maximum Detected Value[1]	Exceedance Factor[1]	*COC in Groundwater* COCs at the Point of Compliance[1]	Number of Results	Number of Detected Results[1]	Percent Detected[1]	Number of Detected Results that Exceed Criteria[1]	Percent of Detected Results that Exceed Criteria[1]	Maximum Detected Value[1]	Exceedance Factor[1]	*Upgradient Potential COC* Constituents Present Upgradient of the Point of Compliance[1]
Mutagenic Cancerous Polycyclic Aromatic Hydrocarbons (cPAHs)																			
56-55-3	Benzo(a)anthracene	µg/L		38								338							
50-32-8	Benzo(a)pyrene	µg/L		38								338							
205-99-2	Benzo(b)fluoranthene	µg/L		38								338							
207-08-9	Benzo(k)fluoranthene	µg/L		38								338							
218-01-9	Chrysene	µg/L		38								338							
53-70-3	Dibenz(a,h)anthracene	µg/L		38								338							
193-39-5	Indeno(1,2,3-cd)pyrene	µg/L		38								338							
	Benzo(a)pyrene TEQ[2,3]	µg/L	1.8E-04	39	0	0.0%	0	0.0%	ND	ND	No[4]	348	0	0.0%	0	0.0%	ND	ND	No
Polychlorinated Biphenyls (PCBs)																			
12672-29-6	**Aroclor 1248**	µg/L	2.3E-05	63	0	0.0%	0	0.0%	ND	ND	No[4]	304	1	0.3%	1	0.3%	1.3E-01	5,644	**Yes**
11097-69-1	**Aroclor 1254**	µg/L	5.5E-06	63	0	0.0%	0	0.0%	ND	ND	No[4]	304	8	2.6%	8	2.6%	3.7E-02	6,746	**Yes**
37324-23-2	**Aroclor 1260**	µg/L	2.3E-05	63	19	30%	19	30%	1.2E-01	5,209	**Yes**	304	36	11.8%	36	11.8%	8.0E-01	34,729	**Yes**
1336-36-3	**Total PCBs**	µg/L	2.3E-05	63	19	30%	19	30%	1.2E-01	5,209	**Yes**	304	41	13.5%	41	13.5%	8.0E-01	34,729	**Yes**

Notes:

Dark red text with pale background Indicates that constituent was retained as an upgradient potential constituent of concern but not as a constituent of concern at the point of compliance.

Dark red text with dark background Indicates that constituent was retained as a constituent of concern at the point of compliance.

1 Blank indicates that no individual soil cleanup level has been developed for the associated constituent; therefore, the associated constituent was not retained as a contaminant of concern at Boeing Plant 2. This is because Washington state regulates carcinogenic polycyclic aromatic hydrocarbons using the benzo(a)pyrene Toxic Equivalent. Refer to https://fortress.wa.gov/ecy/clarc/FocusSheets/tef.pdf. This is consistent with EPA's philosophy of using relative potency factors.
2 Benzo(a)pyrene TEQ calculated using 1/2 the reporting limit as a surrogate for non-detected constituents when at least one constituent contributing to the TEQ was detected.
3 EPA has approved the use of Ecology's TEFs for this site.
4 These constituents may be added back as COCs in the future if they are detected in Shoreline Monitoring Wells.

Abbreviations:

CAS Chemical abstract number
COC Constituent of Concern
Ecology Washington State Department of Ecology
EPA U. S. Environmental Protection Agency
PAH Polycyclic Aromatic Hydrocarbons
TEF Toxic Equivalency Factor
TEQ Toxic Equivalent

Table B.2d
Frequency of Exceedance of TMCLs by Volatile Organic Compounds in Groundwater

				Data from Shoreline Monitoring Wells: 2005-Present (Point of Compliance Wells)								Data from Upland Groundwater Wells: 2005-Present (All Uplands Wells)							
CAS	Constituent	Units	EPA Proposed Groundwater TMCL[1]	Number of Results	Number of Detected Results[2]	Percent Detected[2]	Number of Detected Results that Exceed Criteria[3]	Percent of Detected Results that Exceed Criteria[3]	Maximum Detected Value[2]	Exceedance Factor[3]	*COC in Groundwater* COCs at the Point of Compliance[4]	Number of Results	Number of Detected Results[2]	Percent Detected[2]	Number of Detected Results that Exceed Criteria[3]	Percent of Detected Results that Exceed Criteria[3]	Maximum Detected Value[2]	Exceedance Factor[3]	*Upgradient Potential COC* Constituents Present Upgradient of the Point of Compliance
Volatile Organic Constituents (VOCs)																			
67-64-1	Acetone	µg/L	1.1E+05	415	20	4.8%			1.5E+01		No	1,926	344	18%			2.7E+03		No
71-43-2	**Benzene**	µg/L	2.0E+00	416	18	4.3%	6	1.4%	1.7E+01	8.4	**Yes**	2,124	143	6.7%	38	1.8%	4.4E+02	217	**Yes**
78-93-3	2-Butanone (MEK)	µg/L	7.3E+04	400							No	1,851	121	6.5%			1.3E+04		No
75-15-0	Carbon Disulfide	µg/L	3.9E+03	416							No	2,124	180	8.5%			1.7E+01		No
56-23-5	**Carbon Tetrachloride**	µg/L	4.6E-01	416	8	1.9%	7	1.7%	1.6E+00	3.5	**Yes**	2,124	9	0.4%	8	0.4%	1.6E+00	3.5	**Yes**
108-90-7	Chlorobenzene	µg/L	2.7E+02	416							No	2,124	40	1.9%			3.4E+00		No
75-00-3	Chloroethane	µg/L	2.1E+04	416							No	2,124	33	1.6%			6.2E+02		No
67-66-3	Chloroform	µg/L	9.4E+00	416	23	5.5%			4.6E+00		No	2,124	89	4.2%	2	0.1%	1.5E+01	1.6	No; exceedance factor < 2.0; detected exceedence < 0.5%
74-87-3	Chloromethane	µg/L	1.9E+02	416	1	0.2%			3.0E-01		No	2,124	35	1.6%			2.9E+01		No
106-43-4	4-Chlorotoluene	µg/L	2.6E+03	20							No	864							No
95-50-1	1,2-Dichlorobenzene	µg/L	4.4E+02	54							No	951	2	0.2%			1.0E+00		No
106-46-7	1,4-Dichlorobenzene	µg/L	1.7E+00	54							No	951	1	0.1%			3.0E-01		No
75-34-3	1,1-Dichloroethane	µg/L	3.3E+01	416	17	4.1%			1.7E+00		No	2,124	204	9.6%	1	0.05%	6.7E+01	2.0	No; exceedance factor < 2.0; detected exceedence < 0.5%
107-06-2	1,2-Dichloroethane	µg/L	3.6E+00	416							No	2,123	19	0.9%			7.0E-01		No
75-35-4	**1,1-Dichloroethene**	µg/L	3.2E+00	416							No	2,124	59	2.8%	16	0.8%	2.7E+02	84	**Yes**
156-59-2	**cis-1,2-Dichloroethene**	µg/L	1.3E+02	416	97	23%	18	4.3%	1.8E+03	13	**Yes**	2,186	1,147	52%	252	11.5%	1.5E+05	1,123	**Yes**
156-60-5	**trans-1,2-Dichloroethene**	µg/L	9.4E+02	416	26	6.3%			1.4E+02		No	2,186	445	20%	1	0.05%	4.8E+03	5.1	**Yes**
78-87-5	1,2-Dichloropropane	µg/L	3.7E+00	416							No	2,124	3	0.1%			6.0E-01		No
100-41-4	**Ethylbenzene**	µg/L	1.7E+00	416	1	0.2%			1.1E+00		No	2,124	106	5.0%	38	1.8%	9.0E+02	522	**Yes**
98-82-8	Isopropylbenzene (cumene)	µg/L	2.7E+02	20							No	864	18	2.1%			9.4E+01		No
591-78-6	2-Hexanone	µg/L	3.2E+03	416							No	2,002	1	0.0%			1.2E+01		No
75-09-2	Methylene Chloride	µg/L	6.1E+01	416							No	2,123	32	1.5%			4.6E+01		No
108-10-1	Methyl Isobutyl Ketone	µg/L	1.9E+04	391							No	1,740	1	0.1%			1.3E+00		No
91-20-3	**Naphthalene**	µg/L	2.6E+01	108	4	3.7%			2.1E-01		No	1,898	114	6.0%	18	0.9%	6.3E+02	24	**Yes**
100-42-5	Styrene	µg/L	7.7E+04	416							No	2,124	31	1.5%			6.9E+01		No
79-34-5	1,1,2,2-Tetrachloroethane	µg/L	3.3E-01	416							No	2,124							No
127-18-4	**Tetrachloroethene (PCE)**	µg/L	2.1E-02	416	4	1.0%	4	1.0%	1.0E+00	49	**Yes**	2,124	76	3.6%	76	3.6%	7.8E+00	379	**Yes**
108-88-3	**Toluene**	µg/L	1.3E+03	416	9	2.2%			1.4E+00		No	2,124	186	8.8%	6	0.3%	5.1E+03	3.9	**Yes**
71-55-6	1,1,1-Trichloroethane	µg/L	4.6E+04	416							No	2,124	38	1.8%			7.3E+00		No
79-00-5	1,1,2-Trichloroethane	µg/L	2.3E+00	416							No	2,124	23	1.1%			2.3E+00		No
79-01-6	**Trichloroethene (TCE)**	µg/L	5.1E-01	416	86	21%	82	20%	2.9E+01	57	**Yes**	2,186	730	33%	637	29%	6.2E+04	122,465	**Yes**
120-82-1	**1,2,4-trichlorobenzene**	µg/L	1.3E-01	54							No	951	2	0.2%	2	0.2%	2.8E+00	21	**Yes**
75-69-4	Trichlorofluoromethane	µg/L	6.9E+03	416							No	2,108	4	0.2%			6.0E-01		No
76-13-1	1,1,2-Trichlorotrifluoroethane	µg/L	5.9E+04	416							No	2,124	2	0.1%			2.3E+00		No
75-01-4	**Vinyl chloride**	µg/L	2.4E+00	416	74	18%	37	8.9%	1.5E+03	625	**Yes**	2,186	992	45%	539	25%	2.8E+04	11,667	**Yes**
95-47-6	o-Xylene[5]	µg/L	1.6E+03	416	3	0.7%			1.1E+00		No	2,124	55	2.6%			6.4E+02		No
179601-23-1	m,p-Xylene[5]	µg/L	1.3E+03	416	7	1.7%			1.7E+00		No	2,124	74	3.5%	2	0.1%	2.0E+03	1.5	No; exceedance factor < 2.0; detected exceedence < 0.5%

Notes:

Dark red text with pale background Indicates that constituent was retained as an upgradient potential constituent of concern but not as a constituent of concern at the point of compliance.

Dark red text with pale background Indicates that constituent was retained as a constituent of concern at the point of compliance.

1 Blank indicates that no individual groundwater cleanup level has been developed for the associated constituent.
2 Blank indicates that constituent was not detected in this data set.
3 Blank indicates that the no detected result exceeds the criteria.
4 COCs may be added in the future depending on future sampling results.
5 Older data is reported as total xylenes, whereas newer data is reported as o-xylene and m,p-xylene. Some areas with more recent isomer-specific data do not have older total xylene data.

Abbreviations:

CAS Chemical abstract number
COC Constituent of Concern
EPA U. S. Environmental Protection Agency

Table B.2e
Frequency of Exceedance of TMCLs by Total Petroleum Hydrocarbons in Groundwater

CAS	Constituent[1]	Units	EPA Proposed Groundwater TMCL	Data from Shoreline Monitoring Wells: 2005-Present (Point of Compliance Wells)								Data from Upland Groundwater Wells: 2005-Present (All Uplands Wells)							
				Number of Results	Number of Detected Results	Percent Detected	Number of Detected Results that Exceed Criteria	Percent of Detected Results that Exceed Criteria	Maximum Detected Value	Exceedance Factor	*COC in Groundwater* COCs at the Point of Compliance[2]	Number of Results	Number of Detected Results	Percent Detected	Number of Detected Results that Exceed Criteria[3]	Percent of Detected Results that Exceed Criteria[3]	Maximum Detected Value	Exceedance Factor	*Upgradient Potential COC* Constituents Present Upgradient of the Point of Compliance
Total Petroleum Hydrocarbons (TPH)[5]																			
--	**TPH - Gasoline (Benzene Present)**	µg/L	1.0E+03	9	0	0.0%	0	0.0%	ND	ND	No	254	38	15%	21	8.3%	2.3E+04	23	**Yes**
--	**TPH - Aged Gasoline & Mineral Spirits**	µg/L	8.0E+02	1	0	0.0%	0	0.0%	ND	ND	No	6	1	17%	1	17%	2.7E+03	3.4	**Yes**
--	**TPH - Diesel #2**	µg/L	5.0E+02	9	0	0.0%	0	0.0%	ND	ND	No	259	23	8.9%	10	3.9%	1.1E+04	22	**Yes**
--	**TPH - Heavy Oil**	µg/L	5.0E+02	13	0	0.0%	0	0.0%	ND	ND	No	294	5	1.7%	4	1.4%	3.4E+03	6.8	**Yes**

Notes:

Dark red text with pale background — Indicates that constituent was retained as an upgradient potential constituent of concern but not as a constituent of concern at the point of compliance.

Dark red text with dark background — Indicates that constituent was retained as a constituent of concern at the point of compliance.

1 Petroleum hydrocarbons have been measured at Plant 2 over the years using a variety of methods and standards. Please see the table below to understand how each of the measurements of TPH have been compared to the TPH TMCLs.
2 COCs may be added in the future depending on future sampling results.

Abbreviations:

CAS Chemical abstract number
COC Constituent of Concern
EPA U. S. Environmental Protection Agency

TPH Map Between Constituent and TMCL

Constituent	Regulatory Standard
TPH - Gasoline (Benzene Present)	TPH - Gasoline (Benzene Present)
TPH - Mineral Spirits Range	TPH - Aged Gasoline & Mineral Spirits
TPH - Diesel Range	TPH - Diesel #2
TPH - Bunker C	TPH - Heavy Oil
TPH - Motor Oil Range	TPH - Heavy Oil

Table B.3a
Frequency of Exceedance of TMCL by Constituents in Sediments

CAS	Constituent	Sediment TMCL[1]	Units	Number of Results	Number of Detected Results[2]	Percent Detected[2]	Number of Detected Results that Exceed Criteria[3]	Percent of Detected Results that Exceed Criteria[3]	Maximum Detected Value[2]	Exceedance Factor[3]	Retained as COC
Metals											
7429-90-5	Aluminum		mg/kg	95	95	100%			3.1E+04		No
7440-36-0	Antimony		mg/kg	42	12	29%			1.1E+02		No
7440-38-2	Arsenic	5.7E+01	mg/kg	100	54	54%			3.1E+01		No
7440-39-3	Barium		mg/kg	95	95	100%			4.2E+02		No
7440-41-7	Beryllium		mg/kg	95	88	93%			6.0E-01		No
7447-47-3	**Chromium**	2.6E+02	mg/kg	199	199	100%	3	2%	3.4E+02	1.3	**Yes**
18540-29-9	Chromium (VI)		mg/kg	2							No
7440-48-4	Cobalt		mg/kg	96	96	100%			1.4E+02		No
7440-43-9	**Cadmium**	5.1E+00	mg/kg	198	122	62%	10	5%	2.1E+01	4.1	**Yes**
7440-50-8	**Copper**	3.9E+02	mg/kg	199	199	100%	4	2%	2.5E+03	6.4	**Yes**
7439-89-6	Iron		mg/kg	95	95	100%			8.1E+04		No
7439-92-1	**Lead**	4.5E+02	mg/kg	198	153	77%	3	2%	3.9E+03	8.7	**Yes**
7439-96-5	Manganese		mg/kg	95	95	100%			1.7E+03		No
7439-97-6	**Mercury**	4.1E-01	mg/kg	195	119	61%	14	7%	4.6E+00	11	**Yes**
7487-94-7	Mercury (inorganic salts and elemental)		mg/kg	195	119	61%			4.6E+00		No
7439-98-7	Molybdenum		mg/kg	4	4	100%			8.0E+00		No
7440-02-0	Nickel		mg/kg	100	100	100%			2.2E+02		No
7782-49-2	Selenium		mg/kg	96	12	13%			1.1E+01		No
7440-22-4	**Silver**	6.1E+00	mg/kg	198	78	39%	3	2%	7.9E+00	1.3	**Yes**
7440-31-5	Tin		mg/kg	7	5	71%			5.0E+00		No
1314-62-1	Vanadium		mg/kg	96	96	100%			1.5E+02		No
7440-66-6	**Zinc**	4.1E+02	mg/kg	198	198	100%	21	11%	4.2E+03	10	**Yes**
Other Inorganics											
57-12-5	Cyanide (free)		mg/kg	14	1	7%			3.5E-01		No
Volatile Organic Constituents (VOCs)											
67-64-1	Acetone		mg/kg	37	11	30%			5.3E-01		No
71-43-2	Benzene		mg/kg	37							No
78-93-3	2-Butanone (MEK)		mg/kg	34	12	35%			1.1E-01		No
75-15-0	Carbon Disulfide		mg/kg	37	17	46%			1.8E-02		No
56-23-5	Carbon Tetrachloride		mg/kg	37							No
108-90-7	Chlorobenzene		mg/kg	37	1	3%			1.4E+00		No
75-00-3	Chloroethane		mg/kg	37							No
67-66-3	Chloroform		mg/kg	37							No
74-87-3	Chloromethane		mg/kg	37							No
106-43-4	4-Chlorotoluene		mg/kg	4							No
95-50-1	1,2-Dichlorobenzene		mg/kg	105	1	1%			2.2E-02		No
106-46-7	1,4-Dichlorobenzene		mg/kg	105	2	2%			2.7E-02		No
106-46-7	1,4-Dichlorobenzene		mg/kg	105	2	2%			2.7E-02		No
75-34-3	1,1-Dichloroethane		mg/kg	37							No
107-06-2	1,2-Dichloroethane		mg/kg	37							No
75-35-4	1,1-Dichloroethene		mg/kg	37							No
156-59-2	cis-1,2-Dichloroethene		mg/kg	37	4	11%			4.3E-03		No
156-60-5	trans-1,2-Dichloroethene		mg/kg	37							No
78-87-5	1,2-Dichloropropane		mg/kg	37							No
100-41-4	Ethylbenzene		mg/kg	37	1	3%			4.7E-01		No
98-82-8	Isopropylbenzene(cumene)		mg/kg	4							No
591-78-6	2-Hexanone		mg/kg	37							No
75-09-2	Methylene Chloride		mg/kg	37							No
108-10-1	Methyl Isobutyl Ketone		mg/kg	37							No
100-42-5	Styrene		mg/kg	37							No
79-34-5	1,1,2,2-Tetrachloroethane		mg/kg	37							No
127-18-4	Tetrachloroethene (PCE)		mg/kg	37							No
108-88-3	Toluene		mg/kg	37	1	3%			1.8E-03		No
71-55-6	1,1,1-Trichloroethane		mg/kg	37							No
79-00-5	1,1,2-Trichloroethane		mg/kg	37							No
79-01-6	Trichloroethene (TCE)		mg/kg	37	8	22%			2.3E-02		No
120-82-1	1,2,4-trichlorobenzene		mg/kg	105							No
75-69-4	Trichlorofluoromethane		mg/kg	37							No
76-13-1	1,1,2-Trichlorotrifluoroethane		mg/kg	37							No
75-01-4	Vinyl chloride		mg/kg	37	1	3%			2.0E-03		No
95-47-6	o-Xylene[5]		mg/kg	30	2	7%			4.8E-01		No
179601-23-1	m,p-Xylene[5]		mg/kg	26	2	8%			1.2E+00		No
10330-20-7	Xylenes (total)[5]		mg/kg	11							No
Semivolatile Organic Compounds (SVOCs)[4]											
83-32-9	**Acenaphthene**	5.0E-01	mg/kg	102	14	14%	3	3%	7.6E-01	1.5	**Yes**
208-96-8	Acenaphthylene	1.3E+00	mg/kg	102	2	2%			5.7E-02		No
120-12-7	**Anthracene**	9.6E-01	mg/kg	102	28	27%	1	1%	4.4E+00	4.6	**Yes**
191-24-2	Benzo(g,h,i)perylene		mg/kg	102	43	42%			7.0E-01		No
191-24-2	Benzo(g,h,i)perylene		mg/kg	102	43	42%			7.0E-01		No
117-81-7	**Bis(2-ethylhexyl)phthalate**	1.3E+00	mg/kg	107	71	66%	6	6%	8.6E+00	6.6	**Yes**
85-68-7	**Butylbenzyl phthalate**	6.3E-02	mg/kg	107	20	19%	13	12%	7.1E+00	113	**Yes**
86-74-8	Carbazole		mg/kg	70	8	11%			2.9E-01		No
59-50-7	4-chloro-3-methylphenol		mg/kg	70							No
132-64-9	Dibenzofuran	5.4E-01	mg/kg	70	7	10%			3.6E-01		No
84-74-2	**Di-n-butylphthalate**	1.4E+00	mg/kg	107	29	27%	2	2%	3.8E+00	2.7	**Yes**
84-66-2	Diethylphthalate	2.0E-01	mg/kg	107	6	6%			3.4E-02		No
105-67-9	2,4-Dimethylphenol	2.9E-02	mg/kg	102							No
131-11-3	Dimethylphthalate	7.1E-02	mg/kg	107	4	4%			2.2E-02		No
117-84-0	Di-n-octyl phthalate	6.2E+00	mg/kg	107	3	3%			2.9E-01		No
206-44-0	**Fluoranthene**	1.7E+00	mg/kg	102	77	75%	8	8%	1.0E+01	5.9	**Yes**
86-73-7	**Fluorene**	5.4E-01	mg/kg	102	12	12%	1	1%	1.5E+00	2.8	**Yes**
91-57-6	2-Methylnaphthalene	6.7E-01	mg/kg	102	3	3%			2.2E-01		No
95-48-7	2-Methylphenol (o-cresol)	6.3E-02	mg/kg	102							No
106-44-5	4-Methylphenol (p-cresol)	6.7E-01	mg/kg	98	1	1%			5.2E-02		No
91-20-3	Naphthalene	2.1E+00	mg/kg	210	12	6%			3.8E-01		No
85-01-8	**Phenanthrene**	1.5E+00	mg/kg	102	53	52%	1	1%	4.9E+00	3.3	**Yes**
108-95-2	Phenol	4.2E-01	mg/kg	102	7	7%	1	1%	4.4E-01	1.0	No
129-00-0	**Pyrene**	2.6E+00	mg/kg	102	79	77%	4	4%	5.2E+00	2.0	**Yes**
Mutagenic Cancerous Polycyclic Aromatic Hydrocarbons (cPAHs)											
56-55-3	Benzo(a)anthracene	1.1E+02	mg/kg	102	49	48%			4.7E+00		No
50-32-8	Benzo(a)pyrene	9.9E+01	mg/kg	102	56	55%			2.0E+00		No
205-99-2	Benzo(b)fluoranthene	2.3E+02	mg/kg	102	59	58%			4.5E+00		No
207-08-9	Benzo(k)fluoranthene	2.3E+02	mg/kg	102	53	52%			2.5E+00		No
218-01-9	Chrysene	1.1E+02	mg/kg	102	66	65%			6.6E+00		No
53-70-3	Dibenz(a,h)anthracene	1.2E+01	mg/kg	102	13	13%			3.3E-01		No
193-39-5	Indeno(1,2,3-cd)pyrene	3.4E+01	mg/kg	102	42	41%			8.3E-01		No
Polychlorinated Biphenyls (PCBs)											
12672-29-6	Aroclor 1248		mg/kg	825	110	13%			2.0E+01		No
11097-69-1	Aroclor 1254		mg/kg	825	433	52%			1.1E+02		No
37324-23-2	Aroclor 1260		mg/kg	825	541	66%			5.1E+01		No
1336-36-3	**Total PCBs**	1.3E-01	mg/kg	547	425	78%	376	69%	1.1E+02	846	**Yes**

Notes:

Dark red text with dark background — Indicates that constituent was retained as a constituent of concern.

1 Blank indicates that no TMCL was developed for the associated constituent.
2 Blank indicates that constituent was not detected at Boeing Plant 2.
3 Blank indicates that the no detected result exceeds the criteria.
4 SVOCs are detected infrequently in the sediments and fall within the footprint of contamination defined by total PCBs. EPA has made the risk management decision to treat the metals and PCBs as the COCs used to define the corrective measures for the sediments, since the Corrective Measures for sediments defined by metals and PCBs will remediate contamination for the SVOCs.
5 Older data is reported as total xylenes, whereas newer data is reported as o-xylene and m,p-xylene. Some areas with more recent isomer-specific data do not have older total xylene data; similarly, some areas with older total xylene data do not have newer isomer-specific data.

Abbreviations:

CAS Chemical abstract number
COC Constituent of Concern
EPA U. S. Environmental Protection Agency

Table B.4a
Frequency of Exceedance of TMCLs by Volatile Organic Compounds in Ambient Air

CAS	Constituent[1]	EPA Proposed Residential Air TMCL[2]	Units	Number of Results	Number of Detected Results[3]	Percent Detected[3]	Number of Detected Results that Exceed Criteria[4]	Percent of Detected Results that Exceed Criteria[4]	Maximum Detected Value[3]	Exceedance Factor[4]	Retained as COC	EPA Proposed Modified Industrial Worker Air TMCL[2]	Units	Number of Results	Number of Detected Results[3]	Percent Detected[3]	Number of Detected Results that Exceed Criteria[4]	Percent of Detected Results that Exceed Criteria[4]	Maximum Detected Value[3]	Exceedance Factor[4]	Retained as COC
56-23-5	**Carbon Tetrachloride**	4.1E-01	µg/m^3	18	18	100%	14	78%	0.43	1.1	**Yes**	2.0E+01	µg/m^3	18	18	100%			0.43		No
75-35-4	1,1-Dichloroethene	2.1E+02	µg/m^3	18							No	8.8E+02	µg/m^3	18							No
156-59-2	*cis* -1,2-Dichloroethene		µg/m^3	18							No		µg/m^3	18							No
127-18-4	Tetrachloroethene (PCE)	4.1E-01	µg/m^3	18	3	17%			0.25		No	2.1E+01	µg/m^3	18	3	17%			0.25		No
79-01-6	**Trichloroethene (TCE)**	1.2E-01	µg/m^3	18	16	89%	16	89%	1.9	16	**Yes**	6.1E+00	µg/m^3	18	16	89%			1.9		No
75-01-4	Vinyl chloride	2.8E-01	µg/m^3	18	14	78%			0.12		No	1.4E+01	µg/m^3	18	14	78%			0.12		No

Notes:

Dark red text with dark background Indicates that constituent was retained as a constituent of concern.

1 Only a limited number of constituents were analyzed for in indoor air at Plant 2; the list was developed based on existing groundwater, soil, and soil vapor data.
2 Blank indicates that no TMCL was developed for the associated constituent.
3 Blank indicates that constituent was not detected in this data set.
4 Blank indicates that the no detected result exceeds the criteria.

Abbreviations:

CAS Chemical abstract number
COC Constituent of Concern
EPA U. S. Environmental Protection Agency

Boeing Plant 2
Seattle, WA

Target Media Cleanup Levels Technical Memorandum

Attachment B
Frequency of Exceedance Tables and Scatter Plots

Figures

FINAL

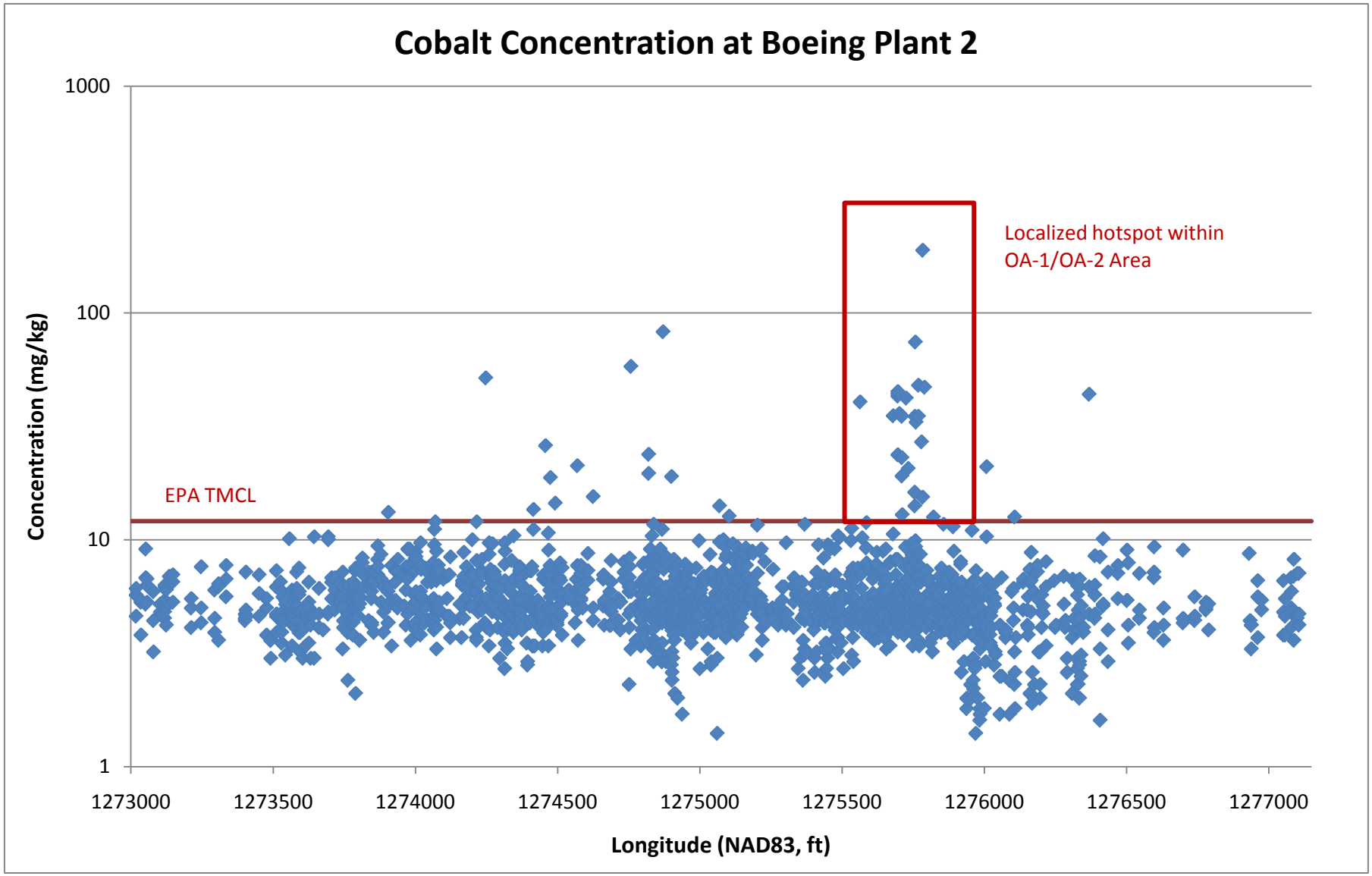

	TMCL Technical Memorandum **Boeing Plant 2**	Figure B.1 Cobalt Concentration at Boeing Plant 2

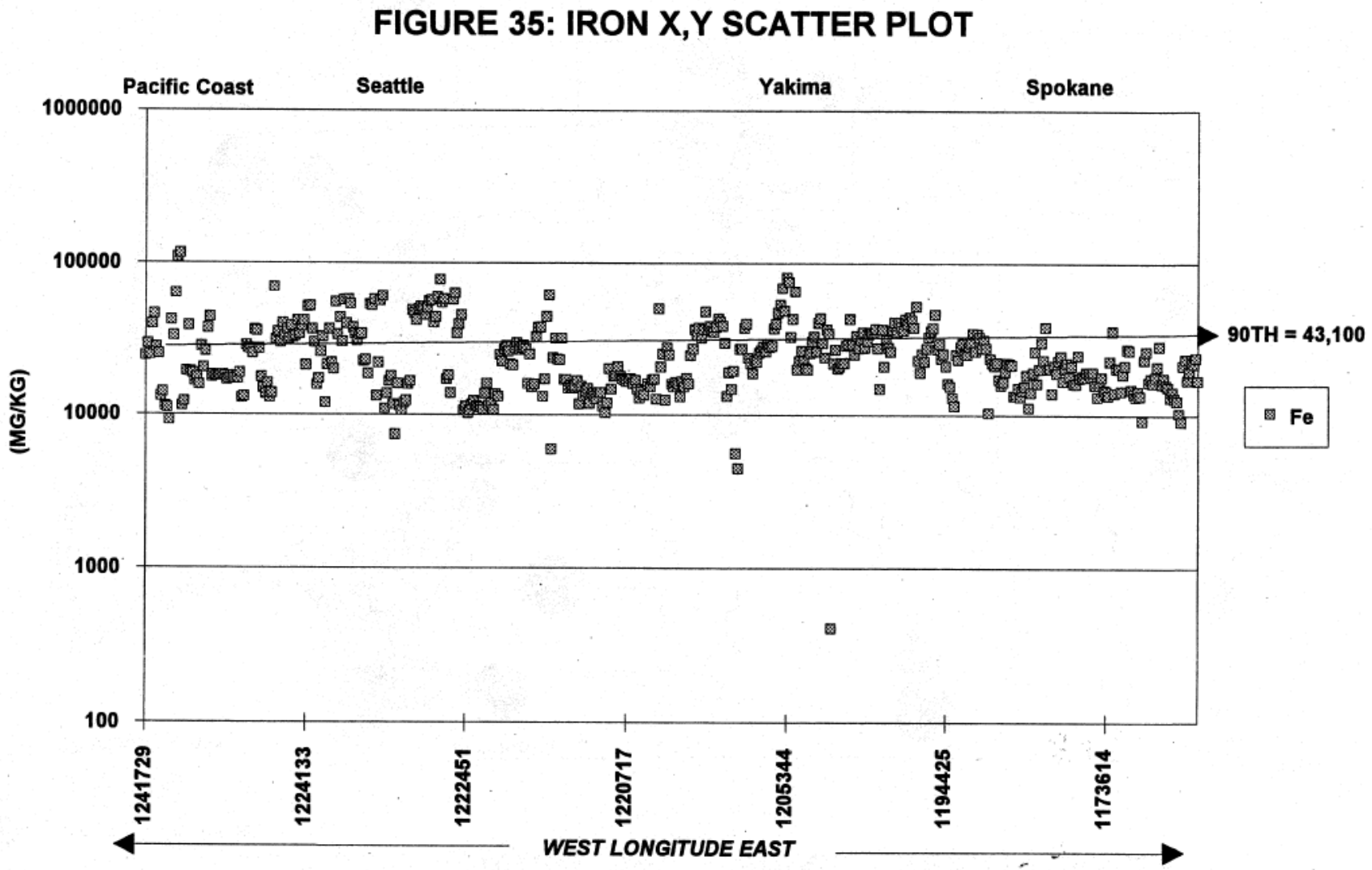

Figure reproduced from: Washington State Department of Ecology. 1994. *Natural Background Soil Metals Concentrations in Washington State, Toxics Cleanup Program (Charles San Juan), Department of Ecology, Publication No. 94-115*. October.

	TMCL Technical Memorandum **Boeing Plant 2**	Figure B.2 Iron Concentration Across Washington State

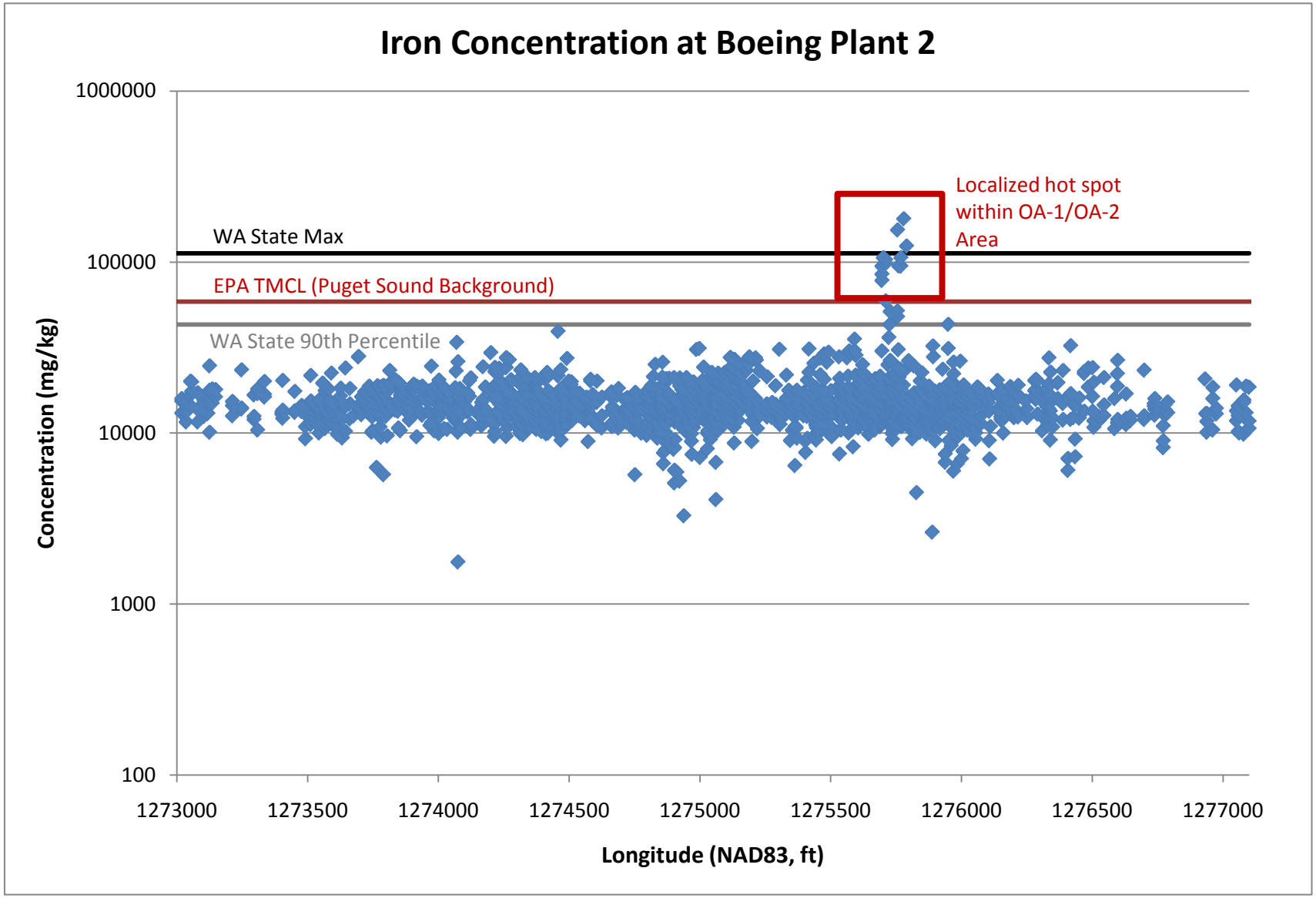

	TMCL Technical Memorandum **Boeing Plant 2**	Figure B.3 Iron Concentration at Boeing Plant 2

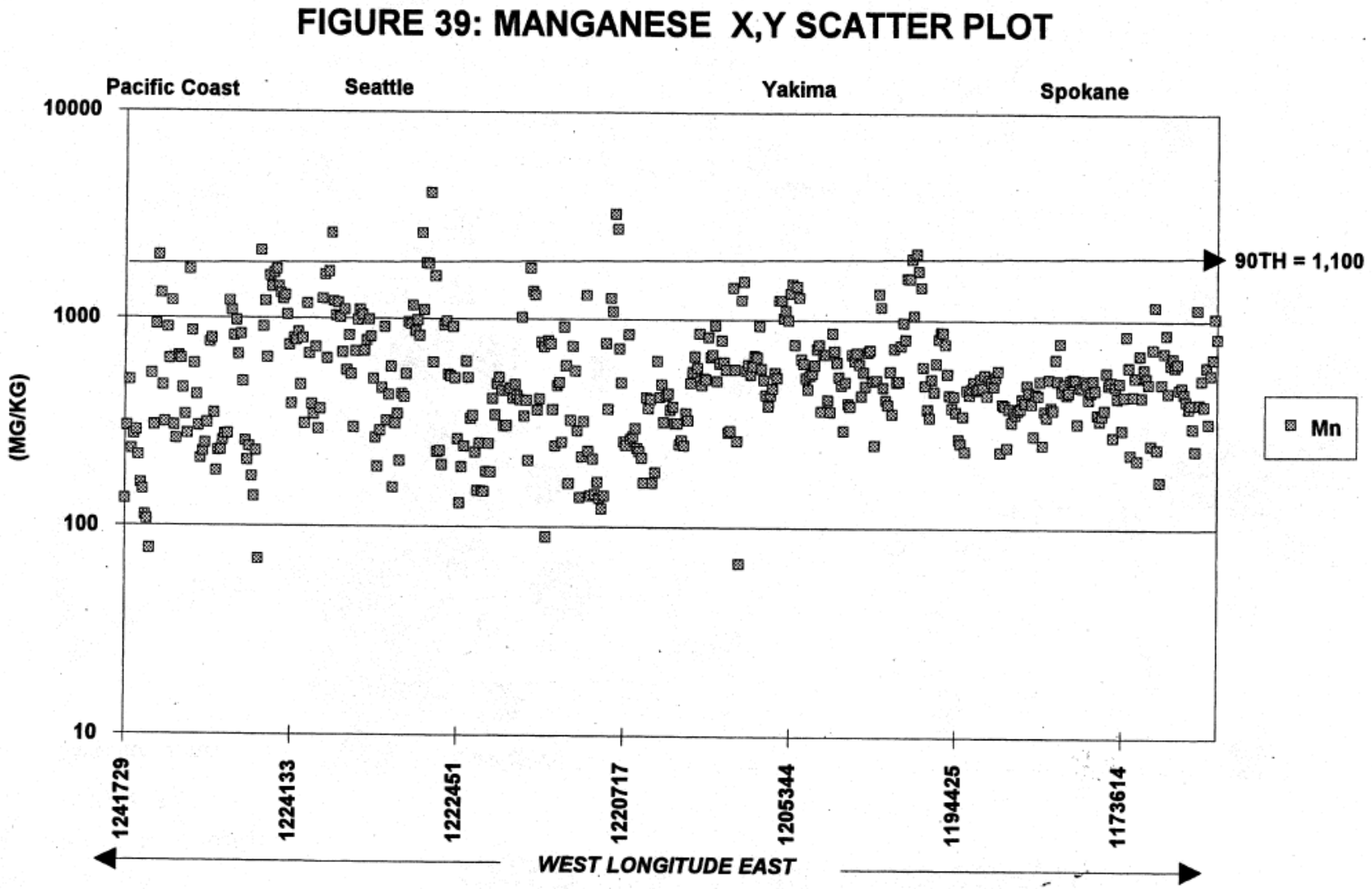

Figure reproduced from: Washington State Department of Ecology. 1994. *Natural Background Soil Metals Concentrations in Washington State, Toxics Cleanup Program (Charles San Juan), Department of Ecology, Publication No. 94-115*. October.

	TMCL Technical Memorandum **Boeing Plant 2**	Figure B.4 Manganese Concentration Across Washington State

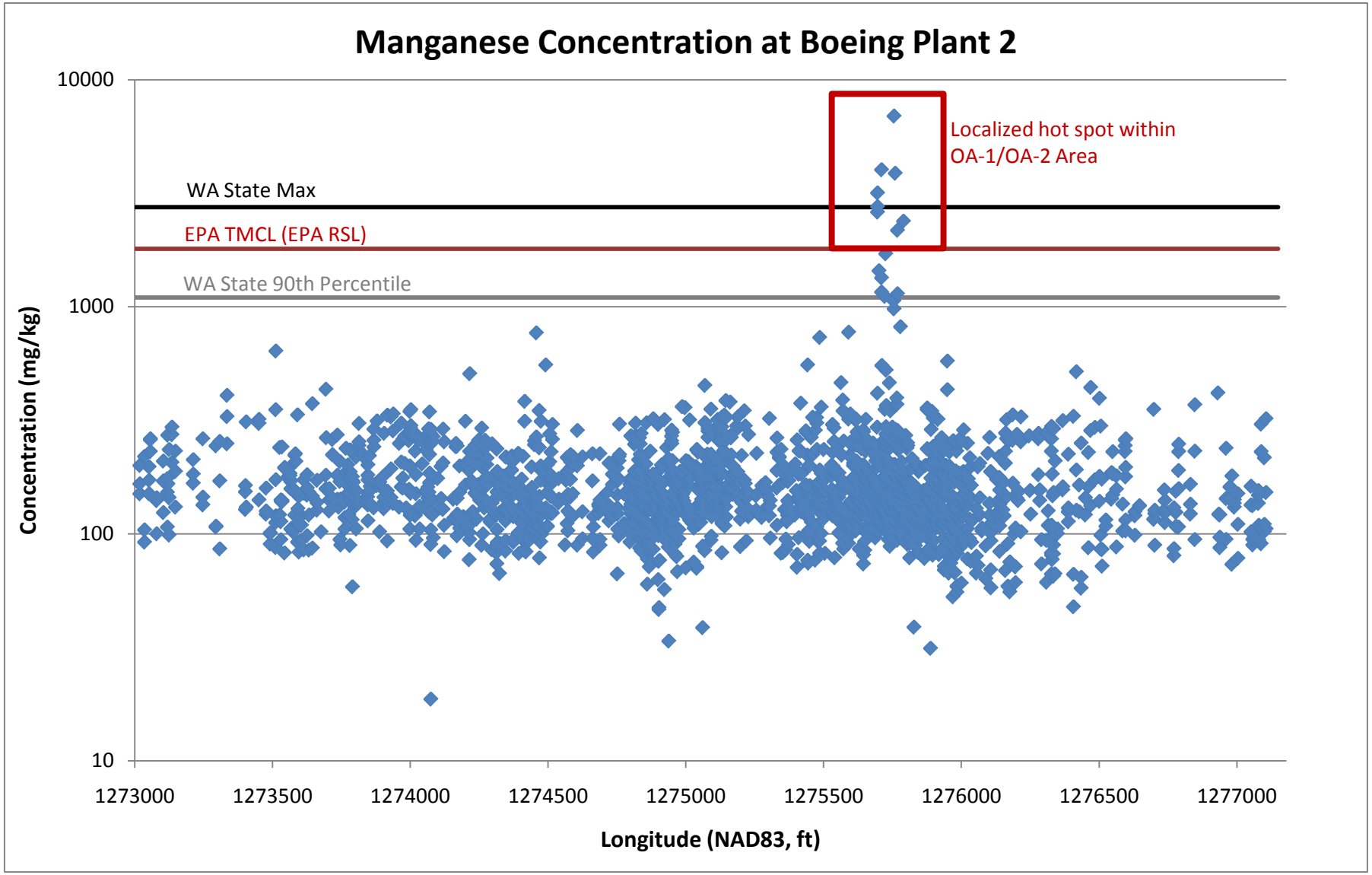

	TMCL Technical Memorandum **Boeing Plant 2**	Figure B.5 Manganese Concentration at Boeing Plant 2

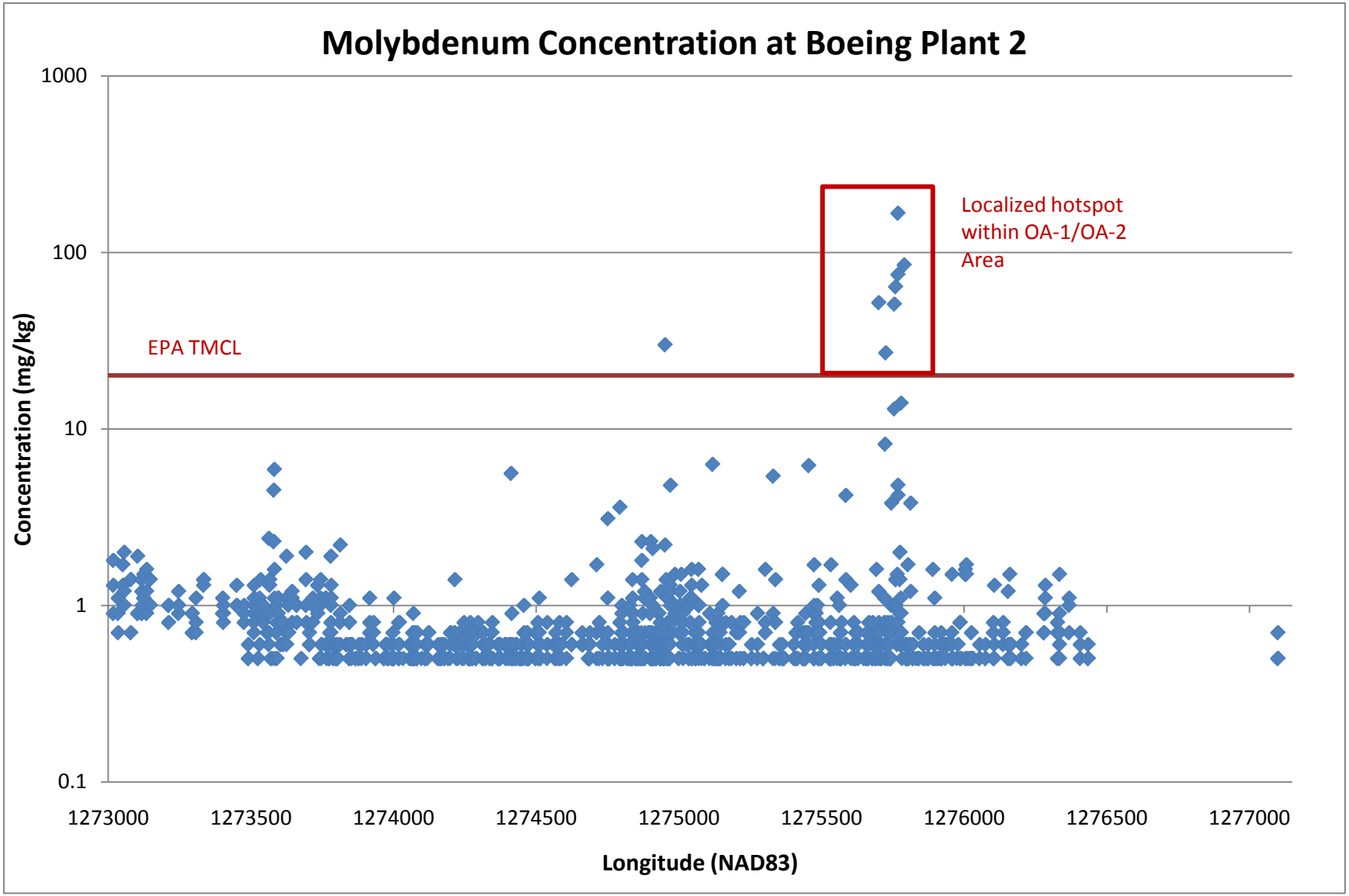

	TMCL Technical Memorandum **Boeing Plant 2**	Figure B.6 Molybdenum Concentration at Boeing Plant 2

October 26, 2010 EPA Approval with Modifications Letter –
Boeing Plant 2 TMCL Technical Memorandum, December 2008

UNITED STATES ENVIRONMENTAL PROTECTION AGENCY
REGION 10
1200 Sixth Avenue, Suite 900
Seattle, WA 98101-3140

OFFICE OF
AIR, WASTE AND TOXICS

Mr. William Ernst
Company Energy & Environmental Affairs
The Boeing Company
P.O. Box 3707
MC 1W-12
Seattle, Washington 98124-2207

Re: Approval with modifications of the Target Media Cleanup Levels Technical Memorandum, Boeing Plant 2, Tukwila, Washington, Resource Conservation and Recovery Act (RCRA) Docket No. 1092-01-22-3008(h)
EPA ID No. WAD 00925 6819

Dear Mr. Ernst:

The U.S. Environmental Protection Agency Region 10 (EPA) has received the revised version of the above Technical Memorandum dated December 2008. EPA has reviewed and conditionally approves as modified the Technical Memorandum with the following modifications pursuant to Section 10.1 of the Order. Because some deletions and/or modifications are not to the text itself but are to tables and attachments EPA could not physically modify as redlines, the condition is the submission of a fully conforming version by Boeing with all changes along with all redlined textual modifications. EPA has included a red-lined hard copy of several sections of the modified Memorandum document for ease of reference.

Modifications

1. General: Many sections, tables, and attachments have been deleted. Both the Table of Contents and the sections of the text have been renumbered as necessary in the attached red-line version. The modifications below are annotated based on the draft submissions numbering, not the new one provided in the red-line document.

2. PCOC. Change PCOC to COC (constituent of concern) throughout the document. Delete PCOC from the acronym list. TMCLs are being calculated for all substances that may have been or may be a contaminant at Plant 2, not just primary constituents of concern.

3. Header and Footer. Modify the header and footer as necessary to reflect this newer version.

4. Foreword, page vi, first paragraph, third sentence: The words *"...specifies activities necessary to correct…"* have been replaced by *"...requires the performance of such interim measures as EPA may require during the performance of a RCRA facility investigation/corrective measures study (RFI/CMS) to assess the nature and extent of hazardous*

Printed on Recycled Paper

constituent contamination, and to analyze corrective action alternatives to address..." since this phrase is more definitive. See also comment #12 below.

5. Foreword, page vi, third paragraph, third sentence: Delete this sentence. This sentence is not necessary for this document.

6. **Foreword, page vi, fourth paragraph, last two sentences**: These sentences were deleted and replaced with "*Each volume has three parts; the Data Gap Investigation Work Plan (Part A), the Data Gap Investigation Report (Part B), and the Proposed CMS Alternatives (Part C)."* This sentence better explains the phasing and submittals of the CMS process.

7. Foreword page vi, last paragraph: This paragraph was deleted since it is repeated on the next page, a more applicable location for this information.

8. Section 1.1, Goals and Objectives, page 1-1, first paragraph, last sentence: Delete this sentence. This sentence is not necessary for this document.

9. Section 1.1, Goals and Objectives, page 1-1, third paragraph, first sentence: The word "*chemical*" was replaced with "*hazardous*" (the RCRA regulatory term).

10. Section 1.1, Goals and Objectives, page 1-1, fourth paragraph, second sentence: The words "*or if promulgated criteria address fewer than all potential exposure pathways...*" were inserted after the words: "*If no promulgated criteria exist…*" for clarity.

11. Section 1.1, Goals and Objectives, page 1-1, fourth paragraph, last sentence: The word "*chemical*" was replaced with "*constituent*" (the RCRA regulatory term).

12. Section 1.2.1, Resource Conservation and Recovery Act (RCRA), page 1-2, first paragraph: Delete this incorrect paragraph and replace it with the following: "*Plant 2 is a treatment, storage, and disposal (TSD) facility subject to RCRA regulation and permitting, which includes corrective action. Section 3008(h) authorizes the issuance of RCRA corrective action Orders. The 3008(h) Order issued to Boeing (RCRA Docket No 1092-01-22-3008(h), effective January 18, 1994) requires the performance of such interim measures as EPA may require during the performance of a RCRA facility investigation/corrective measures study (RFI/CMS) to assess the nature and extent of hazardous constituent contamination, and to analyze corrective action alternatives to address actual or potential threats to human health or the environment from the release or potential release at or from Plant 2.*" Boeing may add at its option after this sentence: "*Boeing may elect to implement final corrective action after it is selected by EPA in a Statement of Basis under this Order. Otherwise, it will implement corrective action pursuant to a new Order.*"

13. Section 1.2.2, Comprehensive Environmental Response Compensation and Liability Act (CERCLA) page 1-2 through 1-3: This section contains several factual errors regarding the interactions of Federal and State law and the current Orders addressing the contamination in the larger LDW. Delete this entire section and replace it with the following "*An investigation and analysis of alternatives for the Lower Duwamish Waterway (LDW) Superfund Site is ongoing pursuant to a joint CERCLA/MTCA Administrative remedial investigation/feasibility*

Printed on Recycled Paper

study (RI/FS) Order on Consent issued on December 20, 2000, by USEPA and Ecology to Boeing, the City of Seattle, Port of Seattle and King County. A CERCLA RI/FS is generally equivalent to a RCRA RFI/CMS. While the DSOA is geographically within the LDW Site, at Boeing's option, it continues to be addressed as part of Plant 2 RCRA corrective action, pursuant to the pre-existing 1994 3008(h) Order. The DSOA has been characterized as a RCRA early action in the LDW RI/FS process, and DSOA planning has been coordinated with other LDW activities, particularly at the Jorgensen facility which borders Plant 2 to the south (the 1994 Plant 2 Order was amended to require coordination with the adjacent Jorgensen early action area, as was Jorgensen's CERCLA early action removal Order to require coordination with the adjacent Plant 2 DSOA); and to a much lesser degree with the Slip 4 CERCLA early action area removal, which borders Plant 2 to the north but is recessed from the waterway, and the Terminal 117 early action area removal, which is across the LDW from the southern portion of Plant 2."

14. Section 1.2.3, Model Toxics Control Act (MTCA), page 1-3, first paragraph, first sentence: The word "*regulation*" was replaced by "*statute*."

15. Section 1.2.3 Model Toxics Control Act (MTCA), page 1-3 first paragraph, third sentence: This sentence was deleted and replaced by "*USEPA and Ecology have generally agreed for their mutual convenience in a Memorandum of Understanding that USEPA will generally be the LDW Site lead agency for in-water portions of the Site and Ecology will generally be the lead agency for upland source control portions of the Site, and that the Agencies may alter these lead-support roles at any time for any portions of the Site.*" This paragraph defines the relationship between EPA and Ecology correctly.

16. Section 2.2.1 and Section 6.1.1, Highest Beneficial Use of Groundwater, pages 2-3 and 6-1: These sections are incorrect. These sections were revised as follows (note the first 3 sentences were not altered): "*Risk-based cleanup standards for groundwater are dependent upon the existing and potential future uses of that groundwater. The National Contingency Plan states that "EPA expects to return usable ground waters to their beneficial uses" (40 Code of Federal Regulations [CFR] §300.430[a][1][iii][F]). Generally, the beneficial use of groundwater is either for drinking (i.e., potable) or for discharge to nearby surface waters. Potability is determined empirically using criteria in WAC 173-340-720(2). While a majority of Plant 2 groundwater may not be potable due to factors in WAC 173-340-720(2), significant discrete areas of groundwater at Plant 2 may be potable. In any case, in accordance with WAC 173-340-720(1)(i), more stringent cleanup levels may be required to protect sensitive subgroups. The DSOA encompasses American Indian usual and accustomed fishing areas pursuant to treaties of the United States. Northwest tribal populations claim to, and are well known to, consume locally harvested fish and shellfish at a higher rate than the general U.S. population. For this reason, the "Draft Framework for Selecting and Using Tribal Fish and Shellfish Consumption Rates for Risk-Based Decision Making at CERCLA and RCRA Cleanup Sites in Puget Sound and the Strait of Georgia" (Tribal Risk Framework) provides appropriate guidance for determining exposures used in calculating risk based Target Media Cleanup Levels. Fish and Shellfish consumption rates derived using this Framework provide more human health-protective cleanup levels than other promulgated or calculated groundwater levels. Maximum Contaminant Levels (MCLs) which may apply in discrete areas, MCTA Method A, and MCTA*

Printed on Recycled Paper

Method B groundwater CULs have been included in this Memorandum for comparative purposes."

EPA has deleted the draft paragraphs due to the use of the 1998 Shallow Groundwater Use Designation Memo that was based on a limited data set that has been consistently rejected by EPA. Section 121(d)(2)(A)(ii) of CERCLA requires cleanups to meet MCLs where they are relevant and appropriate, which generally means where water is potable, and EPA's One Cleanup Program specifies that RCRA and CERCLA cleanups generally should achieve the same standards and/or goals.

17. Section 2.2.3, Designation of Marine vs. Freshwater Criteria, page 2-4, second paragraph, last sentence: Rewrite the sentence to read "The salinity keeps the *ground*water from being potable and influences the biota present *in the Waterway*; however, some freshwater species use the waterway, especially in the upper sections of the water column." This further delineates the specific impacted water types.

18. Section 2.3.2, Future Facility Uses, page 2-4, first paragraph, second sentence: This sentence has been revised to read "Future uplands land use by Boeing at Plant 2 is *anticipated to be* industrial…" since institutional controls have not been placed on the Facility to compel future land use restrictions.

19. Section 2.3.3, Shoreline Use Designation, page 2-5: Delete this section in its entirety. The discussion in this section is inconsistent with the restoration project settlement embodied in the recently entered CERCLA Natural Resource Damage Consent Decree between Boeing and the CERCLA natural resource trustees.

20. Section 2.5 and 2.5.1, page 2-6 through 2-8: These sections have been deleted in their entirety, since they do not pertain to the development of the TMCLs.

21. Section 3.0, page 3-1, Nature and Extent of Contamination: The first paragraph has been revised to read: "The nature and extent of contamination at Plant 2 will be presented in detail in Volumes III through IX *of the CMS and in the Duwamish Sediment Other Area (DSOA) Interim Measure Work Plan. TMCLs have been calculated and are presented for all constituents of concern in all media in this Memorandum."*

All remaining paragraphs, subsections and associated tables of Section 3.0 have been deleted. This conditionally approved as modified Memorandum has calculated TMCLs for all possible constituents of concern making the rest of this section unnecessary. All constituents of concern are defined as any constituent that has been detected or may have been historically used at Plant 2.

22. Section 4.1.3 and 4.1.4, Residential and Industrial Exposures and Trenching Exposures, page 4-1 through 4-2: Section 4.1.3 has been revised with the correct information as follows: "In accordance with *the Order, USEPA Region X has instructed Boeing to develop residential TMCLs for Plant 2. USEPA has stated that it intends to use the residential TMCLs as an "unrestricted land use baseline;" however, USEPA has also stated that Boeing may propose*

Printed on Recycled Paper

industrial FMCLs in this Memorandum with the understanding that the proposed FMCLs may or may not be applicable to the Corrective Measures Implementation.

The following tables and discussion include both residential TMCLs and proposed industrial FMCLs for soil.

As requested by USEPA, TMCLs and potential FMCLs for soil were developed from the following two sources:

- *USEPA's Regional Screening Levels (RSLs) for Chemical Contaminants at Superfund Sites were used for both residential and industrial exposures. Where appropriate, carcinogenic risk has been modified to 10^{-5} for the industrial scenario.*
- *MTCA standard Method C industrial and Method B residential exposures using generic default assumptions to calculate cleanup levels as per WAC 173-340-745 and WAC 173-340-740. Modified Method C and Method B exposures were also calculated to include dermal contact (and inhalation for volatiles) in addition to ingestion.*

The result of the soil calculations are presented in Tables 1, 3, 4, and 7. For a few constituents, the background value was used for the TMCL."

For Section 4.1.4 and throughout the Memorandum, the term "*industrial TMCLs*" has been replaced by "*proposed industrial FMCLs.*" EPA agreed that Boeing may present industrial cleanup levels within this Memorandum, but these levels are not target media cleanup levels; they may become the final media cleanup levels if institutional controls, such as an impermeable cap and/or deed restrictions, are in place to ensure protection of human health and the environment at those levels. Those controls are not in place at this time. The heading of Tables 10 and 11 has been changed accordingly. Minor changes were also made to Section 4.1.4 Trenching Exposures (correcting cross-references) and adding the word "*proposed*" in the second sentence of the third paragraph between the words "*lowest*" and "*industrial*."

23. Section 4.1.5, page 4-3, Soil to Groundwater Pathway Exposure: A new section entitled "Soil to Groundwater Pathway Exposure," which was omitted from the draft document, has been added as follows:

"A pathway exists from the contaminated soils in the Uplands of Plant 2 into the groundwater. Once contaminated, this groundwater discharges into the sediments and water of the LDW. The receptors in the LDW include not only the sediments and benthic organisms residing in the sediments, but also the aquatic species and ultimately humans via the food chain. To account for this, values have been calculated using the MTCA three-phase partitioning model (WAC 173-340-747) which uses groundwater CULs derived by EPA to be protective of surface water. EPA used quantitative adjustment factors for: early-life exposure to carcinogens with a mutagenic mode of action; the tribal child fish consumer at 40% of the adult tribal fish consumption rate; the Asian and Pacific Islander adult and child fish consumers; and dermal exposure for all direct contact with soil pathways. These values are included in Tables 1 through 8."

Printed on Recycled Paper

24. Section 4.2, Other Exposures, page 4-3, third paragraph: In the first and fourth sentences, the word "*currently*" has been inserted between the words "*is*" and "*blocked*." The words "*at this time*" were added to the end of the third sentence. In the fourth sentence, the words "*an institutional control consisting of*" has been deleted since a formal mechanism has not been established to ensure that the pavement and building remain in place. The clause at the end of the sentence, "*or establish that such controls are not needed*" has also been deleted since the last sentence makes it unnecessary.

25. Section 5.1, Sediment Conditions, page 5-1, second and third paragraphs: These incorrect paragraphs have been deleted and replaced with the following:

"TMCLs for sediments in the LDW are intended to protect benthic and pelagic aquatic species using the LDW and humans who may consume seafood from the LDW. The Sediment Quality Standards (SQS) of the Washington Sediment Management Standards (SMS) are numerical standards developed for the protection of benthic invertebrate organisms. These are the only organisms for which SMS numerical standards have been promulgated to date. WAC 173-204-570)(4) requires site specific cleanup standards to be as close as practicable to the SQS, also called the "cleanup objective," but no higher than the Cleanup Screening Level (CSL), also called the "Minimum Cleanup Level." WAC 173-204-570(5) requires that all cleanup standards must ensure protection of human health and the environment. Human health SMS numerical criteria are reserved for site-specific determination. Due to bioaccumulation in the food chain some aquatic species above benthic invertebrates in the food chain could require more stringent protection than the SQS. Currently, these do not need to be specified or developed further because the risk to human seafood consumers is consistently greater (see LDW RI/FS human health risk assessment). Risk-based concentrations (RBCs) of PCBs, as a driver COC for the protection of human seafood consumers, based on calculations using the Tribal Risk Framework consumption rate of 97.1 grams/day i.e., (approximately 3.5 ounces/day) are more stringent than background levels (see LDW RI/FS human health risk assessment)). MTCA requires that where RBCs are more stringent than background, cleanup standards for final remedies must achieve natural background levels, while interim actions may achieve anthropogenic background levels. As such, the TMCLs for the sediments will be based on these standards and are contained in Table 12."

The sediment TMCLs for Plant 2 apply to surface sediments in the intertidal and subtidal areas. These areas will consist of clean material placed during the proposed interim measure. In areas where erosion or direct contact is possible, the sediment TMCLs will also be applied to the bank sediment. Monitoring of the new, clean sediment surface will be performed to assess the rate of recontamination, if any, that may migrate from outside the remedy area. Monitoring of groundwater also will be performed to assess the rate and potential for contamination present in the groundwater to affect the clean sediment backfill material. The groundwater to sediment pathway is discussed in the following section."

26. Section 6.1.1, Highest Beneficial Use of Groundwater, page 6-1: The first paragraph is replaced by the language provided in modification #16. The second and third paragraphs are deleted in their entirety.

Printed on Recycled Paper

27. Sections 6.2 and 6.3: Section 6.2 was renamed "*Protection of Surface Water*." The second paragraph has been revised as follows: "*The most stringent of the promulgated standards referenced in this paragraph along with adjusted values from calculations applying the Tribal Risk Framework are used to establish surface water concentrations that are protective for both aquatic species and human health in the LDW along Plant 2, as provided in the attached Tables. The promulgated standards are Ambient Water Quality Criteria established under Sections 303-304 of the Clean Water Act (33 U.S.C. 1313-14) which may be found at http://www.epa.gov/ost/criteria/wqctable and the National Toxics rule at 40 CFR 131.36, and Washington State Surface Water Quality Standards at RCW 90-48 and WAC 173-201A, both chronic and acute, and marine and freshwater standards, and values based on MTCA Method B at WAC 173-340-730(3).*"

Sections 6.2.1, 6.2.2, 6.3, 6.3.1, and 6.3.3 have been deleted since they are no longer applicable based on the above modification. Information in these sections has been incorporated as necessary, and into the actual TMCL tables.

28. Section 6.3.2, Adjustment to the Standards to Reflect Tribal Seafood Consumption: This section is inaccurate. Delete this entire section, including the heading, and replace with the following:

"6.3 Consideration of Tribal and Asian and Pacific Islanders' Seafood Consumption Rates

USEPA Region 10 published the "Framework for Selecting and Using Tribal Fish and Shellfish Consumption Rates for Risk-Based Decision Making at CERCLA and RCRA Cleanup Sites in Puget Sound and the Strait of Georgia" (USEPA, 2007). It is based on fish and shellfish consumption studies of tribes, primarily the Tulalip Tribes and the Suquamish Tribe. For Plant 2, USEPA instructed Boeing to use the Tulalip Tribes' consumption rate, minus salmon and minus fish and shellfish harvested outside Puget Sound. EPA made the following assumptions in providing this direction to Boeing:

> *1) the Tulalip Tribes' consumption rate is likely more appropriate for the LDW area than is the Suquamish Tribe's rate, because the LDW is unlikely – even under "clean" conditions – to have sufficient intertidal shellfish habitat to sustain the high rate of shellfish consumption that the Suquamish Tribe enjoys;*
>
> *2) all fish and shellfish harvested from outside Puget Sound are assumed to not be contaminated by releases from Plant 2; and*
>
> *3) salmon are assumed to be exposed to the chemicals present in their tissues when caught as adults in the LDW from remote locations in Puget Sound or the open ocean.*
>
> *There are many uncertainties associated with these assumptions, addressed in the Framework. The Framework specifically addresses the uncertainties associated with the third assumption above with this language:*
>
> > *PCBs and other bio-accumulative and persistent chemicals found in contaminated sediments can be moved from their site of release via erosion, dredging, tidal currents, flood events, and vapor*

Printed on Recycled Paper

transport. Offsite transport is also possible when aquatic organisms become contaminated near a cleanup site and then migrate to distant locations, where they contribute to food chain effects that eventually affect fish, including adult salmon. However, adult salmon body burdens of bio-accumulative and persistent contaminants typically come from many sources and cannot currently be apportioned with confidence to specific locations. An assumption that contaminants present in harvested salmon are not associated with the site, even when the same chemicals have been released from the site, is likely to underestimate the site's contribution to risks from consuming such fish. The degree of underestimation is not known.

If the full body burden of bioaccumulative and persistent contaminants released at a site and found in local salmon is attributed to a single source (i.e., the site under evaluation), site contributions to risk are likely to be overestimated, since some portion of the body burden likely has been acquired elsewhere.

Some site-related contaminants may bioconcentrate in adult salmon due to epithelial tissue or gill contact, depending in part upon the salmon residence time in the vicinity of the site-related contamination. Making an assumption that adult salmon do not reside in the vicinity of the site long enough for bioconcentration to occur could result in an erroneous exclusion of contaminants in salmon from the site-related risk assessment. An assumption that bioconcentration does occur could lead to an overestimation of risks if uptake does not occur.

The total fish and shellfish consumption rate for the Tulalip Tribes, based on a 95th percentile consumer-only consumption rate for benthic fish, pelagic fish, shellfish and salmon is 243 g/day. After adjusting for Puget Sound-harvested fish and shellfish only and assuming that the site related PCB contaminant body burden for salmon is zero, the effective consumption rate to be used for Plant 2 is 97.1 g/day. Pursuant to recommendations in the Framework, the tribal exposure duration is assumed to be 70 years (instead of the standard 30 years in a risk assessment) to account for a lifetime of eating fish and shellfish from a specific harvesting area. The average body weight of the adult participants in the study, 81.8 kg, is also used. The consumption rate for children was estimated to be 38.8 g/day, which is 40% of the adult rate, an option provided in the Framework.

Also accounted for are the seafood consumption rates of Asian and Pacific Islanders (A&PI) who harvest from the LDW and Elliott Bay and may be exposed to chemical releases from Plant 2 in this manner. USEPA funded and participated in a study (Sechena et al., 1999) to estimate the amount and types of seafood consumed by the A&PI population in King County. The 95th percentile total seafood A&PI consumption rate is 305.7 g/day. The seafood harvested and consumed by A&PIs only from King County waters, was estimated and assumed to be the amount of seafood potentially affected by Plant 2 releases and hence associated with Plant 2 A&PI seafood consumption risks. This amount, for adults, is 57.1 g/day, extrapolated to a child rate of 23 g/day based on 40% of the adult rate. The average adult study participant body rate of 63 kg was used. As USEPA had no information regarding exposure duration based on consistency in harvesting from certain areas over a lifetime, the standard exposure duration of 30 years was used for this population. These exposure assumptions, including the adjusted seafood consumption rate, have been adopted by Ecology for use as appropriate for use with MTCA surface water cleanup equations for sites in LDW/Elliott Bay area."

29. Section 6.4, Protection of Sediments: This section has been deleted and replaced with the following: *"TMCLs for sediments in the LDW are intended to protect benthic and pelagic aquatic species using the waterway, and humans who may consume seafood from the waterway. See text in Section 5.1 TMCLs for Sediments, above."*

Printed on Recycled Paper

30. Section 6.5, Groundwater TMCLs for Protection of Surface Water and Point of Compliance: Delete the first two sentences**.** The table reference at the beginning of the first paragraph has been changed, i.e., Table 6.4 has been incorporated into the new TMCL tables. The last paragraph has been deleted in its entirety. As Boeing has stated, the point of compliance is the top slope and therefore not affected by attenuation to the water column.

31. Section 7.4.2, Building Types in the J&E Modeling, third bullet: The word "*commercial*" has been deleted. It is not a legally defined standard used by EPA in this context.

32. Section 7.5, Soil and Groundwater Screening Levels for Residences, page 7-5: This section has been deleted in its entirety and replaced with: "*Soil and groundwater screening levels predicted by modeling to be protective of unrestricted indoor air quality were calculated with the values and methodology presented in Attachment C."* Since actual indoor monitoring will be necessary and the applicability of the J & E model is suspect due to soil contamination on Plant 2, further discussion in this section is not necessary.

33. Section 8.1, Scope of Target Media Cleanup Level Technical Memorandum, page 8-1, first paragraph: The first paragraph was re-entered due to a software formatting problem. The words "*detected in a media*" were deleted from the second sentence. TMCLs are being established for all possible contaminants at Plant 2, not just those that were detected. For the same reason, the third sentence was deleted in its entirety.

34. Sections 8.2, 8.3, 8.4, 8.5, and 8.6, Scope of Target Media Cleanup Level Technical Memorandum, page 8-1 through 8-2: Delete all of these sections, since the methodology used in the draft is different than the one required by EPA. Since this information was presented earlier in the document with modifications outlined above, these sections are no longer necessary.

35. Section 8.7, Use of TMCLS in Volume C CMS Reports, page 8-3: The section number and title of this section were deleted, and the text has been incorporated into section 8.1. The third and fourth sentences of the first paragraph were deleted as unnecessary.

36. References, Section 9.0, Page 9-2: The following reference was added alphabetically after the Pendowski reference: "*Sechena, R., Nakano, C., Liao, S. Polissar, N., Lorenzana, R., Truong, S. and Fenske, R. 1999, Asian and Pacific Islander Seafood Consumption Study. EPA 910/R-99-003. May.*"

37. Tables 4.1a through 4.4a, 6.1a through 6.4, 8.1 and 8.2: Delete all of these tables and replace them with the provided tables. Many of the tables have been deleted in their entirety or modified significantly based on the inclusion of Tribal Risk Framework criteria, correction of some equations (e.g., incorrect BCFs, oral RfDs), removal and/or significant modification of sections of the Memorandum, and the development of surface to groundwater soil values.

38. Tables 4.1b and 4.4c, 5.1, 5.2, 7.1, and 7.2: Modify these tables as appropriate addressing the previous comments in this modification, as applicable. Redline corrected tables have **not** been included in this modification, these must be corrected by Boeing

Printed on Recycled Paper

39. New Table 9, Chromium and Lead: "ND" is incorrect for the blocks of these constituents. Include the appropriate values. A redline corrected table has **not** been included in this modification, this must be corrected by Boeing.

40. New Table 16: Add the provided Table 16 to the modified document.

41. Figure 2.2, Site Plan with Corrective Measure Study Areas: Label the areas. A redline corrected figure has **not** been included in this modification, this must be corrected by Boeing.

42. Attachment A, Evolution of PMCLs, Screening Levels, and TMCLs: Delete this attachment. Documentation of the process is adequately covered in the text of the Memorandum. The remaining Attachments have been re-lettered, but for the purposes of this conditional approval with modifications, the originally submitted attachment designations will be used for the remaining modifications, with the new letter in parentheses.

43. Attachment C (New "B"), Evolution Approved J&E Values for Industrial and Commercial Settings: Attachment C, Tables 4 and 5, J-E GW and Soil Results:

a) The MTCA column must be revised to indicate it represents Method C concentrations.
b) The MTCA concentration for TCE must be updated to reflect the current CLARC value.

A redline corrected table has **not** been included in this modification, these revisions must be made by Boeing.

44. Attachment D (New "C"), Section 1.0, J & E Values for Residential Settings, second paragraph, fifth sentence: The second half of the second paragraph, starting with the sentence beginning "The conservative assumptions…" has been replaced with: *"The assumptions in this evaluation regarding building construction, and location of subsurface contaminants, are intended to result in a human health-protective scenario for potential vapor migration, as described in the following sections. For this evaluation, the COC concentrations in indoor air are calculated based on the MTCA Method B air cleanup level equations, using current EPA Regional Screening Levels (RSLs) with the exception of trichloroethylene, for which EPA Region 10-recommended values are used. Soil and groundwater concentrations intended to result in indoor air concentrations at or below the MTCA B concentrations using the EPA toxicity values described above were then calculated."* Incorrect references were used in this section.

45. Attachment D (New "C"), Section 2.0, Evaluation Approach - Residential, second paragraph, last sentence: "*MTCA B*" has been replaced with "*acceptable*." MTCA B is not necessarily applicable in the context of this section.

46. Attachment D (New "C"), Section 2.1, COC Screening Methodology, first paragraph: The first sentence and two subsequent bullets are incorrect. They have been deleted and replaced by the following: *"As stated in the previous section (1.0), MTCA Method B standard formulas were used as screening levels for individual constituents, along with EPA-approved toxicity values. These calculations used accepted values for exposure duration, averaging time,*

Printed on Recycled Paper

breathing rate, body weight, etc. Since the evaluation described in this attachment uses a back-calculation method to determine soil and groundwater screening levels protective of indoor air under an assumed scenario, exposure assumptions did not factor into the evaluation except as part of the indoor air cleanup level equations from MTCA."

47. Attachment D (New "C"), Section 2.1, COC Screening Methodology, second paragraph: This paragraph is incorrect. This entire paragraph has been deleted and replaced with: *"A number of constituents that met this criteria were not included in the evaluation either because there are no current EPA RSLs for a particular constituent, or because the J&E Model is not structured to evaluate constituents that are sums of multiple constituents, such as total xylenes. Tables D.1 and D.2 present the list of COCs included in the evaluation."*

48. Attachment D (New "C"), Section 4.2, Industrial/Commercial Scenario – Additional COCS and TCE: The word "Commercial" must be removed from the title for the reason stated in comment #31 above. Ensure that this modification is made in every portion of this Memorandum and all attachments.

49. Attachment D (New "C"), Tables: Make the following corrections to the tables, since these tables were created prior to the update of MCTA B values with EPA-approved toxicity values. A redline corrected table has **not** been included in this response and must be corrected by Boeing.

Table D.1: Recalculate groundwater screening levels for constituents with updated MTCA B indoor air cleanup levels, based on EPA-approved toxicity values. Use the enclosed spreadsheet "*MTCA Method B and C air cleanup levels using EPA Region 10-approved toxicity values, to be used at BP2 for J&E modeling (Tables D.1, D.2, D.3 & D.4) and the trench scenario (Tables F.1 & F.2).*"

Table D.2.: Similarly recalculate soil screening levels for constituents with updated toxicity values.

Table D.3.: Include all of the constituents used for residential exposure scenarios (i.e., Tables D.1 and D.2). Delete the reference to commercial exposure in the title of the table. Revise the column designation "*MTCA 750 Indoor Air Concentration (ug/m3)*" to "*MTCA Method C Indoor Air Concentration (ug/m3)*."

Table D.4.: The same revisions to Table D.3 must be made to Table D.4.

50. Attachment E (New "D"), Table of Contents: Replace "*Ohio USEPA Region III Generic Screening Level Tables*" with "*USEPA Regional Screening Levels*."

51. Attachment E (New "D"), Risk-Based Calculations and Supporting Materials: The bases for this section are incorrect. This section has been deleted in its entirety and replaced with: *"This attachment provides tables containing toxicity and constituent-specific information that informs the development of all TMCLs (excluding vinyl chloride and TCE, which are based on Ecology CLARC-based values).*

Printed on Recycled Paper

The "Table of Seafood Consumption Rates" summarizes the seafood ingestion rates used in the Section 6 groundwater risk-based TMCL calculations. It provides the consumption rates for: the standard MTCA assumption for an adult, the Asian & Pacific Islander adult and child, and the Tulalip Tribes adult and child. These were used in the Section 6 groundwater risk-based TMCL calculations.

The residential and industrial soil sections of the USEPA Regional Screening Level tables were used in the Section 4 soil TMCL evaluation, except for TCE and vinyl chloride. For those two hazardous constituents, Ecology's CLARC database was used, at the direction of USEPA. The Regional Screening Level tables are included in this attachment. Information concerning the derivation of values in the tables can be found at http://www.epa.gov/reg3hwmd/risk/human/rb-concentration_table/usersguide.htm and at links to other relevant issues located on that Web site."

52. Attachment E (New "D"), Summary of Seafood Ingestion Parameters for Surface Water TMCL, page 1: The information in this table has changed since this Memorandum was written. As such, change the page number to E-2 and replace the table with the following table and subsequent text:

Table of Seafood Consumption Rates Used to Calculate TMCLs for Groundwater Discharging to Surface Water at BP2

	Body Weight, kg	Consumption Rate, g/day	Seafood Diet Fraction Affected, unitless	Exposure Duration, years
MTCA Method B	**70**	**54**	**0.5**	**30**
Tribal Adult	**81.8**	**97.1**	**1**	**64**
Tribal Child	**15**	**38.8**	**1**	**6**
Asian & Pacific Islander Adult	**63**	**57.1**	**1**	**24**
Asian & Pacific Islander Child	**15**	**23**	**1**	**6**

"The tribal and Asian & Pacific Islander consumption rate derivations are discussed in Section 6.3.2 of this Technical Memorandum. Child body weights for these groups were not available, the standard USEPA Superfund assumption of 15 kg was used."

The copy of EPA's Regional Screening Level tables has been replaced with the most current version.

Printed on Recycled Paper

53. Attachment F (New "E"), Table F.3: Some of these values are now outdated. Boeing must use the updated table F.3 provided by EPA.

Per paragraph 10.1 of the Order, Boeing must submit a revised Technical Memorandum with the above modifications within thirty (30) days of receipt of this letter. No further modifications are approved other than those listed above. Should you have questions or comments, please don't hesitate to call me at 206-553-4166 or you may email me at Blocker.Shawn@epa.gov.

Sincerely,

Shawn Blocker
Project Coordinator
RCRA Corrective Action and Permits Team

Enclosures

cc: Hideo Fujita, Ecology – NWRO
Brad Helland, Ecology – NWRO
Mark Edens, Ecology – NWRO
BJ Cummings – DRCC
Glen St. Amant – Muckleshoot Tribe
Allison O'Sullivan – Suquamish Tribe without attachments
Denise Taylor – Suquamish Tribe
Marla Steinhoff – NOAA
Heather Trim – People for Puget Sound

Printed on Recycled Paper

List of Enclosures:

Redlined hard copy of:

Conditionally approved with modifications: TMCL Technical Memorandum (main text)
Conditionally approved with modifications: Attachment D (New "C")
Conditionally approved with modifications: Attachment E (new "D")
Conditionally approved with modifications: Tables
Conditionally approved with modifications: Table F.3

Clean hard copy of:

Conditionally approved with modifications: TMCL Technical Memorandum (main text)

Printed on Recycled Paper

File: 10 a

Bcc (W/O attachments):
Charles Ordine, ORC
Bernie Zavala, OEA
Marcia Bailey, OEA
Don Matheny, OEA
Laura Castrilli, AWT
Suzanne Skadowski, ETPA
Karen Keeley, ECL
Piper Petersen-Lee, ECL
Allison Hiltner, ECL
Kris Flint, ECL
Sheila Eckman, ECL
Shawn Blocker, AWT
Christy Brown, AWT

CONCURRENCES:

INITIALS Λ				POLICY FILE		RCRIS INFO SUBMITTED	
NAME Λ	BLOCKER	ZAVALA	ORDINE	YES	NO	YES	NO
DATE Λ						ATTACHED	

PEER REVIEW:

INITIALS Λ							
NAME Λ	CASTRILLI	BROWN	HEDEEN	ARRIGONI	MEYER	PALUMBO	FISHER
DATE Λ							

Printed on Recycled Paper

Table of Contents

Foreword ..... viii~~vi~~

1.0 Introduction 1-1

1.1 GOALS AND OBJECTIVES 1-1

1.2 REGULATORY STATUS 1-2

1.2.1 Resource Conservation and Recovery Act (RCRA) 1-2

1.2.2 Comprehensive Environmental Response Compensation and Liability Act (CERCLA) ..... 1-3~~2~~

1.2.3 Model Toxics Control Act (MTCA) ..... 1-4~~3~~

2.0 Site Setting, History, and Current Land Use 2-1

2.1 PHYSICAL SETTING 2-1

2.1.1 Buildings and Physical Structures 2-1

2.1.2 Soils 2-1

2.1.3 Groundwater and Surface Water 2-2

2.1.4 Plant 2 Corrective Measures Study Area 2-2

2.2 SURFACE WATER CONSIDERATIONS 2-3

2.2.1 Highest Beneficial Use of Groundwater 2-3

2.2.2 Beneficial Uses of Lower Duwamish Waterway Surface Water ..... 2-4~~3~~

2.2.3 Designation of Marine vs. Freshwater Criteria ..... 2-44~~3~~

2.3 LAND USE CONSIDERATIONS 2-4

2.3.1 Existing Facility Uses 2-4

2.3.2 Future Facility Uses ..... 2-5~~4~~

~~2.3.3 Shoreline Use Designation ..... 2-5~~

2.3.3~~4~~ Waterway Uses ..... 2-6~~5~~

2.4 INTERIM MEASURES AND FACILITY UPGRADES ..... 2-6~~5~~

~~2.5 ONGOING SOURCE CONTROL WORK ..... 2-65~~

~~2.5.1 Source Control Process for Stormwater ..... 2-75~~

3.0 Nature and Extent of Contamination 3-1

~~3.1 SOIL ..... 3-1~~

~~3.2 SEDIMENT ..... 3-21~~

~~3.3 GROUNDWATER ..... 3-31~~

~~3.3.1 Site-wide Groundwater ..... 3-31~~
~~3.3.2 Shoreline Groundwater ..... 3-41~~

4.0 TMCLs for Soil 4-1
4.1 DIRECT CONTACT EXPOSURES 4-1
4.1.1 Current and Future Land Use 4-1
4.1.2 Risk Management Areas 4-1
4.1.3 Residential and Industrial Exposures 4-1
4.1.4 Trenching Exposures 4-32
4.1.5 Soil to Groundwater Pathway Exposure 4-3
4.2 OTHER EXPOSURES 4-43
4.3 POINT OF COMPLIANCE 4-53

5.0 TMCLs for Sediments 5-1
5.1 SEDIMENT CONDITIONS 5-1
~~5.2 SEDIMENT MANAGEMENT STANDARDS ..... 5-21~~
~~5.3 HUMAN HEALTH CONCERNS FOR BIOACCUMULATIVE CHEMICALS ..... 5-31~~
5.~~4~~2 POINT OF COMPLIANCE 5-31

6.0 TMCLs for Groundwater 6-1
6.1 GROUNDWATER USE 6-1
6.1.1 Highest Beneficial Use of Groundwater 6-1
6.1.2 Beneficial Uses of Lower Duwamish Waterway Surface Water 6-21
6.2 PROTECTION OF SURFACE WATER ~~FOR AQUATIC SPECIES~~ 6-2
~~6.2.1 Promulgated Surface Water Quality Standards for Protection of Aquatic Species ..... 6-32~~
~~6.2.2 Risk-based Screening Levels for VOCs for Protection of Aquatic Species ..... 6-32~~
6.3 ~~PROTECTION OF SURFACE WATER FOR HUMAN HEALTH~~CONSIDERATION OF TRIBAL AND ASIAN AND PACIFIC ISLANDERS' SEAFOOD CONSUMPTION RATES 6-42
~~6.3.1 Promulgated Standards for Consumption of Seafood ..... 6-42~~
~~6.3.2 Adjustment to the Standards to Reflect Tribal Seafood Consumption ..... 6-42~~
~~6.3.3 The LDWG Baseline Human Health Risk Assessment and Tissue Data ..... 6-52~~

6.4 PROTECTION OF SEDIMENTS 6-84
6.5 GROUNDWATER TMCLS FOR PROTECTION OF SURFACE WATER AND POINT OF COMPLIANCE 6-94

7.0 Vapor Intrusion Considerations 7-1
7.1 INTRODUCTION 7-1
7.2 IDENTIFICATION OF AMBIENT AIR TARGET CONCENTRATIONS 7-1
7.2.1 Current Exposures: Industrial and Office Workers 7-1
7.2.2 Current Potential Exposure: Construction Worker Performing Trenching 7-2
7.2.3 Baseline Unrestricted Exposures: Residential 7-2
7.3 VAPOR INTRUSION INTO TRENCHES 7-2
7.4 VAPOR INTRUSION INTO BUILDINGS 7-3
7.4.1 The Johnson & Ettinger (J&E) Model 7-3
7.4.2 Building Types in J&E Modeling 7-4
7.5 SOIL AND GROUNDWATER SCREENING LEVELS FOR RESIDENCES 7-5

8.0 Summary 8-1
8.1 SCOPE OF TARGET MEDIA CLEANUP LEVEL TECHNICAL MEMORANDUM 8-1
~~8.2 DEVELOPMENT OF CONSTITUENTS OF CONCERN ..... 8-1~~
~~8.3 DEVELOPMENT OF SOIL TMCLS ..... 8-1~~
~~8.4 DEVELOPMENT OF SEDIMENT TMCLS ..... 8-21~~
~~8.5 DEVELOPMENT OF GROUNDWATER TMCLS ..... 8-21~~
~~8.6 VAPOR INTRUSION CONSIDERATIONS ..... 8-21~~
~~8.7 USE OF TMCLS IN VOLUME C CMS REPORTS ..... 8-31~~

9.0 References 9-1

List of Tables

Table 1. TMCLs for Inorganic Chemicals in Soil at the Boeing Plant 2 Facility

Table 2. TMCLs for Inorganic Chemicals in Groundwater at the Boeing Plant 2 Facility

Table 3. TMCLs for Semivolatile Organic Chemicals (minus mutagenic, carcinogenic PAHs) in Soil at the Boeing Plant 2 Facility

Table 4. TMCLs for Mutagenic/Carcinogenic PAHs in Soil at the Boeing Plant 2 Facility

Table 5. TMCLs for Carcinogenic/Mutagenic PAHs In Groundwater at the Boeing Plant 2 Facility~~ Based on Discharge to Surface Water~~

Table 6. TMCLs for Semivolatile Organic Chemicals (minus carcinogenic, mutagenic PAHs) in Groundwater at Boeing Plant 2 Facility

Table 7. TMCLs for Volatile Organic Chemicals and Total Petroleum Hydrocarbons in Soil at the Boeing Plant 2 Facility

Table 8. TMCLs for Volatile Organic Chemicals and Total Petroleum Hydrocarbons in Groundwater at the Boeing Plant 2 Facility

~~Table 3.1a Site-wide Soil Potential Constituents of Concern with a Detection Frequency Greater Than 5 Percent~~

~~Table 3.1b Site-wide Soil Potential Constituents of Concern with a Detection Frequency Less Than or Equal to 5 Percent~~

~~Table 3.1c Site-wide Soil Constituents with Zero Detects~~

~~Table 3.2 Summary of Detection Frequency for SMS Constituents in Sediments~~

~~Table 3.3a Site-wide Groundwater Potential Constituents of Concern with a Detection Frequency Greater Than 5 Percent~~

~~Table 3.3b Site-wide Groundwater Potential Constituents of Concern with a Detection Frequency Less Than or Equal to 5 Percent~~

~~Table 3.3c Site-wide Groundwater Constituents with Zero Detects~~

~~Table 3.4a Shoreline Monitoring Wells Groundwater Potential Constituents of Concern with a Detection Frequency Greater Than 5 Percent~~

~~Table 3.4b Shoreline Monitoring Wells Groundwater Potential Constituents of Concern with a Detection Frequency Less Than or Equal to 5 Percent~~

~~Table 3.4c Shoreline Monitoring Wells Groundwater Constituents with Zero Detects~~

~~Table 4.1a Proposed Soil TMCLs for Metals~~

~~Table 4.1b Proposed Soil TMCLs for Volatile Organic Compounds and Total Petroleum Hydrocarbons~~

~~Table 4.1c Proposed Soil TMCLs for Semivolatile Organic Compounds and Polychlorinated Biphenyls~~

~~Table 4.2 Application of Soil TMCLs to Each Area~~

~~Table 4.3 Proposed Soil Constituents of Concern by Area~~

Table ~~4.4a~~9 Comparison of Soil Trenching Screening Levels to ~~Industrial TMCLs~~Proposed industrial FMCLs for Metals

Table ~~4.4.b~~10 Comparison of Soil Trenching Screening Levels to ~~Industrial TMCLs~~Proposed industrial FMCLs for Volatile Organic Compounds and Total Petroleum Hydrocarbons

Table ~~4.4c~~11 Comparison of Soil Trenching Screening Levels to ~~Industrial TMCLs~~Proposed industrial FMCLs for Semivolatile Organic Compounds and Polychlorinated Biphenyls

Table ~~5.1~~12 Sediment Management Standards Chemical Criteria and Their Dry Weight Equivalents

Table ~~5.2~~13 Identification of Sediment Constituents of Concern

~~Table 6.1a Surface Water Standards for the Protection of Aquatic Organisms—Metals~~

~~Table 6.1b Surface Water Standards for the Protection of Aquatic Organisms—Volatile Organic Compounds and Total Petroleum Hydrocarbons~~

~~Table 6.1c Surface Water Standards for the Protection of Aquatic Organisms—Semivolatile Organic Compounds and Polychlorinated Biphenyls~~

~~Table 6.2 Volatile Organic Compound Risk-based Screening Values for Protection of Aquatic Species from Literature-reported Studies~~

~~Table 6.3 Promulgated Surface Water Standards for the Protection of Human Health Based on the Consumption of Seafood~~

~~Table 6.4 Summary of Proposed Groundwater Target Media Cleanup Levels (TMCLs)~~

Table ~~7.1~~14 Comparison of Exposure Factors for Ambient Air Concentrations

Table ~~7.2~~15 Comparison of Site-wide Groundwater Maximum to Trench Screening Levels

Table 16 Surface Water Protection Equations and Input Parameters

~~Table 8.1 Summary of Proposed Soil Target Medial Cleanup Levels (TMCLs)~~

~~Table 8.2 Summary of Sediment Constituents of Concern~~

~~Table 8.3 Summary of Proposed Groundwater Target Media Cleanup Levels (TMCLs)~~

List of Figures

Figure 2.1 Vicinity Map

Figure 2.2 Site Plan with Corrective Measures Study Areas

Figure 4.1 Risk Management Areas

List of Attachments

~~Attachment A Evolution of Screening Levels and Determination of COCs for TMCL Process~~

Attachment ~~B~~A USEPA-approved Technical Memorandum: Development and Use of Background Values

Attachment ~~C~~ B Approved J&E Values for Industrial and Commercial Settings
Attachment ~~D~~ C J&E Values for Residential Settings
Attachment ~~E~~D Risk-based Spreadsheet Calculations and Support Materials
Attachment ~~F~~E Trenching Scenario
Attachment ~~G~~F Hardness Information for the Lower Duwamish Waterway
Attachment ~~H~~G Protection of Sediment Calculations

List of Abbreviations and Acronyms

Abbreviation/Acronym	Definition
ABW	Average body weight
ACMER	Alternative Corrective Measures Evaluation Report
BCF	Bioconcentration factor
BEHP	Bis(2-ethylhexyl) phthalate
bgs	Below ground surface
BTEX	Benzene, toluene, ethylbenzene, and xylene
CERCLA	Comprehensive Environmental Response, Compensation, and Liability Act
CFR	Code of Federal Regulations
CMI	Corrective Measures Implementation
CMS	Corrective Measures Study
COC	Constituent of concern
CSL	Cleanup Screening Level
cPAH	Carcinogenic polycyclic aromatic hydrocarbon
DSOA	Duwamish Sediment Other Area
DSRMA	Duwamish Sediment Risk Management Area
Ecology	Washington State Department of Ecology
FMCL	Final Media Cleanup Level
HHRA	Human Health Risk Assessment
IRMA	Industrial Risk Management Area
J&E	Johnson and Ettinger
LAET	Lowest Apparent Effects Threshold
LDW Site	Lower Duwamish Waterway Superfund Site
LDWG	Lower Duwamish Waterway Group
MCUL	Minimum Cleanup Level
MHHW	Mean higher high water
MLLW	Mean lower low water
MTCA	Washington State Model Toxics Control Act
NPDES	National Pollutant Discharge Elimination System
NRD	Natural Resource Damage
ORNL	Oak Ridge National Laboratories
PCB	Polychlorinated biphenyl

Abbreviation/Acronym	Definition
PCE	Tetrachloroethene
PMCL	Preliminary Target Media Cleanup Level
~~PCOC~~	~~Potential constituent of concern~~
POC	Point of compliance
RCRA	Resource Conservation and Recovery Act
RCW	Revised Code of Washington
RFI	RCRA Facility Investigation
RME	Reasonable maximum exposure
SARA	Superfund Amendments and Reauthorization Act
SMS	Sediment Management Standards
SMP	Shoreline Master Program
SQS	Sediment Quality Standards
Shoreline RMA	Shoreline Risk Management Area
SRMA	Sediment Risk Management Area
SVOC	Semivolatile organic compound
SWB	Southwest Bank
TCE	Trichloroethene
TMCL	Target Media Cleanup Level
TPH	Total petroleum hydrocarbons
USACE	U.S. Army Corp of Engineers
USC	United States Code
USEPA	U.S. Environmental Protection Agency
VOC	Volatile organic compound
WAC	Washington Administrative Code

Foreword

This Technical Memorandum is part of the Corrective Measures Study (CMS) for The Boeing Company (Boeing) Plant 2 facility (Plant 2) on the Lower Duwamish Waterway. This document and the CMS process are being performed under the Resource Conservation and Recovery Act (RCRA) Administrative Order on Consent (RCRA Order) issued by the U.S. Environmental Protection Agency (USEPA) to Boeing under the authority of Section 3008(h) of the RCRA of 1976, as amended, (42 United States Code [USC] 6928[h]). This RCRA Order (RCRA Docket Number 1092-01-22-3008[h]) became effective on January 18, 1994 and ~~specifies activities necessary to correct~~requires the performance of such interim measures as EPA may require during the performance of a RCRA facility investigation/corrective measures study (RFI/CMS) to assess the nature and extent of hazardous constituent contamination, and to analyze corrective action alternatives to address actual or potential threats to human health and the environment resulting from the release, or potential release, of hazardous constituents at, or from, Plant 2 located at 7755 East Marginal Way South, Seattle/Tukwila, Washington. The CMS Report is being produced as a nine-volume document, with different volumes being prepared at different times to address different aspects and areas of Plant 2.

Formatted: Font: Not Italic

Volume I of the Plant 2 CMS Report will contain introductory text on Plant 2 history, the RCRA CMS process, the Plant 2 physical conceptual site model, the subareas of Plant 2 addressed during the CMS process, and an accounting of Plant 2 RCRA and non-RCRA units and processes.

Volume II of the Plant 2 CMS Report will present the Final Media Cleanup Levels (FMCLs) that will be met at Plant 2. As a precursor to Volume II, this Technical Memorandum is intended, instead, to identify Target Media Cleanup Levels (TMCLs) that will be used to identify, evaluate, and screen possible technologies and specific corrective measures that are appropriate for Plant 2.

~~This document is the outcome of a large amount of cooperative work by USEPA and Boeing staff.~~

Volumes III through IX of the Plant 2 CMS Report describe, in detail, the units and cleanup areas in each of seven upland subareas at Plant 2, and then develop and propose corrective measures for the cleanup actions needed in each subarea. Each volume has three parts; the Data Gap Investigation Work Plan (Part A), the Data Gap Investigation Report (Part B), and the Proposed CMS Alternatives (Part C).

~~Volume a's evaluate the "current" data for each respective subarea and identify data gaps with respect to evaluation for CMS remedy selection. Volume b's will present the results of the data gap investigations and Volume c's will evaluate and select the remedies for each subarea including "No Further Actions."~~

The TMCLs presented in this document will guide the corrective measures process by setting the "target" levels that corrective measures will be designed to reach and lead to development of FMCLs. In the RCRA Order, the development of proposed TMCLs was intended to be performed as part of the RCRA Facility Investigation (RFI) completed in 1998. However,

cleanup levels were not proposed during the RFI process, but were to be established as part of the CMS process. The TMCLs proposed in this document will replace Preliminary Target Media Cleanup Levels (PMCLs) that were established in 1999 to provide goals for Interim Measures that were to be conducted prior to the availability of the TMCLs. In a similar manner, the TMCLs proposed in this document will replace the 2004 Screening Levels that were established at that time to update the 1999 PMCLs by incorporating a number of regulatory and toxicity value changes that followed the 1999 levels.

~~As part of the remedy selection process in the CMS, the FMCLs will be selected and incorporated into Volume II of the CMS. It is likely that the FMCLs will be location-dependent, i.e., will vary from one area to another at Plant 2, due to differences in land use restrictions, physical settings, and specific corrective measure designs.~~

1.0 Introduction

1.1 GOALS AND OBJECTIVES

This Technical Memorandum documents the process used and assumptions made in developing Target Media Cleanup Levels (TMCLs) for The Boeing Company (Boeing) Plant 2 facility (Plant 2) as part of the Resource Conservation and Recovery Act (RCRA) Corrective Measures Study (CMS). The ability of a technology or alternative to meet TMCLs is one of the criteria used to screen and select corrective measures for Plant 2. ~~This work was performed as part of an interactive, cooperative process with Boeing and U.S. Environmental Protection Agency (USEPA) staff over the last several years.~~

Throughout this document, an overall effort has been made to develop TMCLs that are consistent with the following documents or programs:

- RCRA Administrative Order on Consent (RCRA Order; RCRA Docket Number 1092-01-22-3008[h])
- CMS Work Plan, submitted September 1998 and approved by USEPA
- RCRA Guidance and Policy
- Comprehensive Environmental Response, Compensation, and Liability Act (CERCLA) Risk Assessment Guidance for Superfund (USEPA 1989)
- "Framework for Selecting and Using Tribal Fish and Shellfish Consumption Rates for Risk-Based Decision Making at CERCLA and RCRA Cleanup Sites in Puget Sound and the Strait of Georgia," (USEPA 2007)
- Washington State Model Toxics Control Act (MTCA) Regulations (Washington Administrative Code [WAC] 173-340)

A TMCL is a target concentration for a specific ~~chemical~~ hazardous constituent in a particular medium combined with a point of compliance (POC) where this concentration should be met. This definition meets both the requirements of the RCRA Order and MTCA.

The development of TMCLs is a required component of the RCRA Order for Plant 2. Under the RCRA Order, a preference is made for promulgated criteria. If no promulgated criteria exist or if promulgated criteria address fewer than all potential exposure pathways for a specific constituent or medium, then human health or ecological risk-based criteria are to be developed. For a specific medium, more than one exposure pathway often exists; this results in multiple promulgated criteria and/or risk-based criteria for each constituent. For clarity, this Technical Memorandum will present proposed TMCLs with a clear identification of all ~~chemical~~constituent, medium, pathway, and POC combinations.

Formatted: Font: Not Italic

After technologies and specific alternatives have been identified, screened, and evaluated, specific corrective measures will be identified for Plant 2 and presented in Volumes III through IX of the CMS. As part of the description of the corrective measure, final media cleanup levels (FMCLs) and points of compliance will be defined for each required action and summarized in

the final volumes of the CMS. Much of the detail of their justification, use, and compliance will be presented in the specific volume for the CMS dealing with the specific corrective measure. For this reason, FMCLs may be location dependent and vary from one area to another at Plant 2, due to differences in land use restrictions, physical settings, and selected corrective measures.

1.2 REGULATORY STATUS

1.2.1 Resource Conservation and Recovery Act (RCRA)

~~Corrective actions at Plant 2 are conducted in accordance with the RCRA Order (RCRA Docket No. 1092-01-22-3008[h], effective January 18, 1994) issued pursuant to Section 3008(h) of the Solid Waste Disposal Act as amended, also known as RCRA. Section 3008(h) addresses releases at interim status facilities. The RCRA Order specifies activities necessary to correct actual or potential threats to human health and the environment resulting from the release or potential release of hazardous constituents from Plant 2.~~ Plant 2 is a treatment, storage, and disposal (TSD) facility subject to RCRA regulation and permitting, which includes corrective action. Section 3008(h) authorizes the issuance of RCRA corrective action Orders. The 3008(h) Order issued to Boeing (RCRA Docket No 1092-01-22-3008(h), effective January 18, 1994) requires the performance of such interim measures as EPA may require during the performance of a RCRA facility investigation/corrective measures study (RFI/CMS) to assess the nature and extent of hazardous constituent contamination, and to analyze corrective action alternatives to address actual or potential threats to human health or the environment from the release or potential release at or from Plant 2." Boeing may add at its option after this sentence: "Boeing may elect to implement final corrective action after it is selected by EPA in a Statement of Basis under this Order. Otherwise, it will implement corrective action pursuant to a new Order."

Formatted: Don't adjust space between Latin and Asian text, Don't adjust space between Asian text and numbers

Formatted: Font: Not Italic

Formatted: Font: Not Italic

Formatted: Font color: Black

USEPA has split the administration of Plant 2 into Uplands and Waterway portions. The Waterway portion, referred to as the Duwamish Sediment Other Area (DSOA), begins at the top of the bank (or the rear bulkhead wall under the buildings south of the 16th Avenue bridge), and includes a small area of uplands referred to as the Southwest Bank (SWB). As such, the Uplands portion generally begins at the top of the bank and extends to the east to include the rest of the facility.

Groundwater discharging from the Uplands through the DSOA is considered part of the Uplands; however, the TMCL for groundwater includes an evaluation to protect the selected sediment remedy in the DSOA (refer to Section 6 for details).

Plant 2 is undergoing the CMS process. Currently, a series of data gap investigations are being conducted in the Uplands to provide additional data needed for the CMS evaluation of alternatives and the selection of specific remedies in seven sub-areas of Plant 2. The area-by-area evaluation of corrective measures for the Uplands will proceed as approved TMCLs become available and data gaps in each area are filled.

Separately, a DSOA and Southwest Bank Interim Measure Alternatives Evaluation (AMEC and Floyd|Snider 2008) has been presented to USEPA for its review. The decision on and

implementation of the required corrective measure for the waterway portion of Plant 2 will be documented as part of the Plant 2 CMS process as Volume X of the CMS Report.

1.2.2 Comprehensive Environmental Response Compensation and Liability Act (CERCLA)

~~The investigation and remediation of sediments in the Lower Duwamish Waterway is being conducted jointly under CERCLA, the associated Superfund Amendments and Reauthorization Act (42 United States Code [USC] §9601 et seq.), and MTCA. The Lower Duwamish Waterway Superfund Site (LDW Site) was listed on the National Priorities List in 2001. Boeing is a signatory to the joint CERCLA/MTCA Administrative Order on Consent together with the City of Seattle, Port of Seattle, and King County. The CERCLA Order requires that the parties conduct a remedial investigation and feasibility study for the LDW Site sediments.~~

~~The sediments in the DSOA are fully contained within the LDW Site, but have been "carved out" as a Boeing lead project. The cleanup of the DSOA is proceeding under the RCRA Order as an Interim Measure on a time frame that allows it to be coordinated with other early action sites where activities are being performed by other parties as part of the Early Action process under CERCLA.~~

~~Three other early actions are of special interest for the Plant 2 CMS because of their proximity in place and time:~~

- ~~The CERCLA early action at Slip 4 (directly north of Plant 2) being performed by the City of Seattle and King County~~
- ~~The CERCLA early action at Terminal 117 (directly across the waterway from Plant 2) being performed by the Port of Seattle and City of Seattle~~
- ~~The CERCLA action at Jorgensen Forge (directly to the south of Plant 2)~~

~~Actions, schedules, and cleanup levels at Plant 2 are expected to be consistent with these projects. Specific actions may vary because of differences in land use or exposure scenarios, but the overall methodologies and remedial action objectives are expected to be comparable.~~ An investigation and analysis of alternatives for the Lower Duwamish Waterway (LDW) Superfund Site is ongoing pursuant to a joint CERCLA/MTCA Administrative remedial investigation/feasibility study (RI/FS) Order on Consent issued on December 20, 2000, by USEPA and Ecology to Boeing, the City of Seattle, Port of Seattle and King County. A CERCLA RI/FS is generally equivalent to a RCRA RFI/CMS. While the DSOA is geographically within the LDW Site, at Boeing's option, it continues to be addressed as part of Plant 2 RCRA corrective action, pursuant to the pre-existing 1994 3008(h) Order. The DSOA has been characterized as a RCRA early action in the LDW RI/FS process, and DSOA planning has been coordinated with other LDW activities, particularly at the Jorgensen facility which borders Plant 2 to the south (the 1994 Plant 2 Order was amended to require coordination with the adjacent Jorgensen early action area, as was Jorgensen's CERCLA early action removal Order to require coordination with the adjacent Plant 2 DSOA); and to a much lesser degree with the Slip 4 CERCLA early action area removal, which borders Plant 2 to the north but is recessed from the waterway, and the Terminal 117 early action area removal, which is across the LDW from the southern portion of Plant 2.

Formatted: Bullets and Numbering

Formatted: Don't adjust space between Latin and Asian text, Don't adjust space between Asian text and numbers

Formatted: Font: Not Italic

Formatted: Font color: Black

1.2.3 Model Toxics Control Act (MTCA)

MTCA is the State of Washington's equivalent of the federal CERCLA ~~regulation~~ statute and is implemented by the Washington State Department of Ecology (Ecology). Ecology is participating in the Plant 2 RCRA process as a reviewer. ~~Ecology is also participating in the CERCLA process for the LDW Site and has taken the lead role for "source control" for the Superfund site.~~ USEPA and Ecology have generally agreed for their mutual convenience in a Memorandum of Understanding that USEPA will generally be the LDW Site lead agency for in-water portions of the Site and Ecology will generally be the lead agency for upland source control portions of the Site, and that the Agencies may alter these lead-support roles at any time for any portions of the Site.

Cleanup level requirements, including consideration of points of compliance and restoration time frame, specified in the MTCA regulations (WAC Chapter 173-340), have been included in the development of TMCLs at Plant 2.

Formatted: Don't adjust space between Latin and Asian text, Don't adjust space between Asian text and numbers

Formatted: Font: Not Italic

Formatted: Font color: Black

2.0 Site Setting, History, and Current Land Use

2.1 PHYSICAL SETTING

2.1.1 Buildings and Physical Structures

Plant 2 is located on the east bank of the Duwamish Waterway in Seattle and Tukwila, Washington (refer to Figure 2.1). Historically, Plant 2 has specialized in manufacturing aluminum alloy, steel alloy, and titanium alloy parts for airplanes. Plant 2 was built on farmland in the late 1930s and became a significant manufacturing facility during World War II. In recent years, the activities at Plant 2 have shifted toward research, testing, and administration; although some manufacturing is still performed there.

As shown on Figure 2.2, Plant 2 is bounded on the east by East Marginal Way South, a four-lane arterial; on the south by Jorgensen Forge, an active steel and aluminum forge; on the north by Slip 4 and Emerald Services, Inc.; and on the west, by the Lower Duwamish Waterway. The Lower Duwamish Waterway is a federally maintained shipping channel of the Duwamish River; Slip 4 is an off-channel extension of the waterway. Plant 2 is served by both truck and rail, and is accessible from the waterway. Plant 2 is divided into northern and southern sections by a city arterial, 16th Avenue South, which services the 16th Avenue South Bridge over the Duwamish Waterway.

Plant 2 occupies approximately 107 acres of developed, topographically-flat land covered by buildings, paved yards, and parking areas. Most buildings are slab-on-grade with below-grade utilities.

2.1.2 Soils

The soils in the upper 100 feet beneath Plant 2 consist of four major geologic units. The first 3 to 9 feet of soil are comprised of a dark-gray to brown fill that is a loose to very dense, fine-to-medium sand and gray to grayish-brown gravel. Much of the fill appears to be alluvial in nature and probably reflects dredge spoils from modifications to the Duwamish River channel at the beginning of the 20th century; at some locations, debris exists within the fill. The fill is underlain by a discontinuous layer of brownish to greenish-gray to black silt and a soft organic silt layer that is approximately 2-feet thick.

Beneath the silt is the shallow portion of the upper aquifer that consists of poorly-graded, dark-gray, fine-to-medium sand with varying amounts of silt. This alluvial unit extends from approximately 10-feet below ground surface (bgs) to 40- to 50-feet bgs. Underlying this unit are the older Duwamish River alluvial deposits consisting of thick, coarsening-upward sequences of inter-bedded sand and silty sand. These alluvial deposits extend from approximately 40- to 50-feet bgs to 80-feet bgs.

At approximately 80-feet bgs, well logs from Plant 2 describe a distinctive marine silt layer with shell fragments. The contact between the overlying silty sand and the marine silt is sharp and is

readily noted in the field. The marine silt layer is underlain by a dense gray glacial till unit. These two low-permeability deposits form an aquitard that isolates the shallow aquifer (upper 80 feet) from the deeper aquifers beneath the Lower Duwamish Valley.

2.1.3 Groundwater and Surface Water

Groundwater occurs in the alluvial aquifer generally starting at 9- to 12-feet bgs. The approximate groundwater flow direction is southwest towards the Duwamish Waterway. Groundwater from Plant 2 flows directly to the waterway without crossing other properties, except for limited migration across the southern property line onto the northern portion of the Jorgensen Forge facility. Even in that location, the dominant flow direction appears to be approximately parallel to the property line and towards the Duwamish Waterway (FSM 2004).

The Duwamish Waterway in the vicinity of Plant 2 is a tidally-controlled marine embayment with a freshwater lens of outgoing river water on top of the denser (more saline) marine waters. The sediments, while alluvial in nature, have salinities consistent with the marine waters from Elliott Bay. The saltwater layer extends into the uplands as a saltwater wedge or prism. This wedge is approximately 18- to 23-feet bgs at the top of the bank (zero to minus 5-feet mean lower low water [MLLW]), and deepens as non-saline (and less dense) groundwater discharges from the uplands over the top of this saltwater wedge. The effect of this saltwater wedge is that groundwater flow paths curve upwards near the waterway and most of the groundwater in the top 40 feet of the aquifer discharges in a fairly narrow band between minus 5- and plus 5-feet MLLW. Depending on the tidal stage, this discharge will occur into saline, brackish, or freshwater, with the most common situation being groundwater discharge into saline waters.

2.1.4 Plant 2 Corrective Measures Study Area

For the purposes of the CMS, Plant 2 has been divided into the following areas (as shown on Figure 2) for detailed investigation and analysis:

- The North Area
- The 2-10 Area
- The 2-31 Area
- The 2-40s Area
- The 2-60s Area
- The 2-66 Area
- The South Yard Area
- The Waterway Area (also called the DSOA/SWB)

This allows Boeing and the Agencies to focus on specific areas as the cleanup proceeds.

2.2 SURFACE WATER CONSIDERATIONS

2.2.1 Highest Beneficial Use of Groundwater

Risk-based cleanup standards for groundwater are dependent upon the existing and potential future uses of that groundwater. The National Contingency Plan states that "EPA expects to return usable ground waters to their beneficial uses" (40 Code of Federal Regulations [CFR] §300.430[a][1][iii][F]). Generally, the beneficial use of groundwater is either for drinking (i.e., potable) or for discharge to nearby surface waters. Potability is determined empirically using criteria in WAC 173-340-720(2). While a majority of Plant 2 groundwater may not be potable due to factors in WAC 173-340-720(2), significant discrete areas of groundwater at Plant 2 may be potable. In any case, in accordance with WAC 173-340-720(1)(i), more stringent cleanup levels may be required to protect sensitive subgroups. The DSOA encompasses American Indian usual and accustomed fishing areas pursuant to treaties of the United States. Northwest tribal populations claim to, and are well known to, consume locally harvested fish and shellfish at a higher rate than the general U.S. population. For this reason, the "Draft Framework for Selecting and Using Tribal Fish and Shellfish Consumption Rates for Risk-Based Decision Making at CERCLA and RCRA Cleanup Sites in Puget Sound and the Strait of Georgia" (Tribal Risk Framework) provides appropriate guidance for determining exposures used in calculating risk based Target Media Cleanup Levels. Fish and Shellfish consumption rates derived using this Framework provide more human health-protective cleanup levels than other promulgated or calculated groundwater levels. Maximum Contaminant Levels (MCLs) which may apply in discrete areas, MCTA Method A, and MCTA Method B groundwater CULs have been included in this Memorandum for comparative purposes.

~~MTCA (WAC 173-340-720[2]) specifies criteria that must be met in order to classify groundwater as non-potable.~~

~~An extensive study of the hydrogeology in the Duwamish Industrial Area (the Hydrogeologic Pathways Project) was conducted by the City of Seattle's Office of Economic Development and the King County Office of Budget and Strategic Planning. The study was done in order to improve the quality and pace of cleanup-related decision-making for the area, which encompasses Plant 2 (Duwamish Coalition 1998). As part of this Hydrogeologic Pathways Project, the "Technical Memorandum: Shallow Groundwater Use Designation" (Floyd and Snider, Inc. and Hart Crowser 1998) designated that the highest beneficial use of shallow groundwater in the Duwamish Valley, including the area where Plant 2 is located, is discharge to surface water and not as a drinking-water source. In a letter from Ecology's Toxics Cleanup Program to the City of Seattle and King County, the products of the Hydrogeologic Pathways Project were found to be "suitable for use by site managers and others in making site-specific cleanup decisions" (Pendowski 2000).~~

~~Using the Hydrogeologic Pathways Project as intended, Plant 2 groundwater is considered to be non-potable and has a highest beneficial use of discharge to the surface water of the Lower Duwamish Waterway.~~

~~**The next step in evaluating beneficial use of groundwater is to evaluate the designated uses of surface water abutting Plant 2.**~~

Formatted: Font: Not Italic

Formatted: Indent: Left: 0.01", Don't adjust space between Latin and Asian text, Don't adjust space between Asian text and numbers

Formatted: Font: Bold

2.2.2 Beneficial Uses of Lower Duwamish Waterway Surface Water

Formatted: Normal

The use designation of the Lower Duwamish Waterway is set forth in WAC 173-201A-602 (refer to Table 602, which was revised and implemented by Ecology in December 2006, and is pending approval by USEPA under the Clean Water Act). The Washington state-designated uses of the Duwamish River from its mouth to River Mile 11.0 are: salmonid rearing and migration, industrial/agricultural water supply, stock watering, wildlife habitat, secondary contact recreation, boating and sport fishing, and commerce and navigation. Importantly, the Lower Duwamish Waterway is not designated as a potential drinking-water source. Therefore, numerical surface water standards for human health are based on consumption of aquatic organisms (fish and shellfish) and do not include consumption of water.

While WAC 173-201A designates the Duwamish River as fresh surface water, the Duwamish Waterway in the vicinity of Plant 2 is actually a tidally-controlled marine embayment with a thin freshwater lens of outgoing river water on top of the denser (more saline) and more predominant marine waters. The sediments, while alluvial in nature, have salinities consistent with the marine waters from Elliott Bay. Accordingly, for the purposes of calculating Plant 2 TMCLs, the Lower Duwamish Waterway sediments in the vicinity of Plant 2 will be considered "marine," while surface waters will be considered both "freshwater" and "marine."

2.2.3 Designation of Marine vs. Freshwater Criteria

Several regulations and standards require a distinction be made between marine and freshwater. In estuaries, such as the Lower Duwamish Waterway, this distinction can be complex because of the presence of freshwater river discharge as a less-dense layer of water above the tidally influenced marine waters.

For discharge into the water column, both freshwater and marine standards have been considered, although the majority of the water column is saline. The salinity keeps the groundwater from being potable and influences the biota present in the Waterway; however, some freshwater species use the waterway, especially in the upper sections of the water column.

2.3 LAND USE CONSIDERATIONS

2.3.1 Existing Facility Uses

Currently, Plant 2 is used primarily for research and testing, offices, motor pooling and vehicle maintenance, and warehousing of parts and equipment. Small-scale manufacturing operations are also ongoing in conjunction with research and testing functions. The North Area of Plant 2 has been redeveloped in recent years and now contains the Integrated Aircraft Systems Laboratory, associated parking, stormwater treatment bioswales, and a sliver of land that provides a public walking trail along Slip 4 and the Lower Duwamish Waterway. A portion of the South Yard Area has also been redeveloped in recent years and now is home to a wind-tunnel research facility. In the 2-60s and 2-66 Areas, former Buildings 2-62, 2-63, 2-64, 2-65, and 2-66 have been removed; only the slabs remain. The redevelopment of these and other old and underused areas is ongoing at Plant 2.

Except for the shoreline in the North Area along Slip 4, Plant 2 is a fenced, paved, and access-controlled property.

2.3.2 Future Facility Uses

Boeing continues to plan for and conduct redevelopment of outdated and underused structures. Future uplands land use by Boeing at Plant 2 ~~will be~~ is anticipated to be industrial, which is consistent with local area land use controls. Deed restrictions and restrictive covenants will be implemented as needed to support corrective measures that rely on industrial exposure scenarios. The Comprehensive Plans for the Cities of Seattle and Tukwila recognize the Duwamish Manufacturing/Industrial Center as key to continued industrial and manufacturing jobs in the region. Plant 2 is well within this area, and is zoned and targeted for continued industrial use (City of Seattle 2005; City of Tukwila 2005).

The City of Seattle has identified the 16th Avenue South Bridge (the approach to which bisects Plant 2) as a high priority for replacement because of its age and condition. Eventual bridge upgrades or demolition and reconstruction will likely modify the present bridge approach and thus, are also relevant to the overall future configuration of Plant 2.

Based on current uses and planned or anticipated projects, future activities at Plant 2 include:

- Operation of research facilities in the North and South Yard Areas
- Redevelopment of industrial facilities in the central portions of the Site
- Reconstruction of the 16th Avenue South Bridge and approach
- Ongoing public access along Slip 4
- Potentially restored riparian habitat south of the 16th Avenue South Bridge and in the North Area

At the end of these changes, approximately 95 percent of the current facility would remain a controlled-access, fenced, and paved industrial property. The other 5 percent would include unpaved, vegetated, and limited- or no-access habitat areas that also support stormwater control requirements.

~~2.3.3 Shoreline Use Designation~~

~~The City of Tukwila is currently updating its Shoreline Master Program (SMP). Tukwila's SMP is a land use plan that covers the area within 200 feet of the river's edge on either side of the Green/Duwamish River. Under the current SMP, the shoreline owned by Boeing at Plant 2 is designated as a "Manufacturing Industrial Center/Heavy Industrial." Under the draft updated SMP, Plant 2's shoreline is designated as a "High Intensity Shoreline Environment."~~[1]

[1] http://www.ci.tukwila.wa.us/dcd/shoreline.html

2.3.34 Waterway Uses

The Lower Duwamish Waterway is a straightened and dredged channel of the Duwamish River. Channel depth is maintained by the U.S. Army Corps of Engineers and the Port of Seattle. The river from bank-to-bank is generally owned by the Port of Seattle from approximately Harbor Island to the upper turning basin. The area is used for fish and shellfish habitat, salmon migration, boating and sport fishing, tribal fishing, shipping, navigation, and commerce. These uses are expected to continue in the future.

2.4 INTERIM MEASURES AND FACILITY UPGRADES

Beginning in 1986, Boeing has conducted, and continues to conduct, numerous interim measures and other actions to control or eliminate sources of contaminants to the environment. These actions include, for example, the installation of three sheetpile enclosures to contain solvent-contaminated soil and groundwater, updated management of electrical equipment and vaults, cleaning of legacy solids in stormwater drainage pipes, removal or control of PCB-containing caulks, removal of contaminated soils, removal of floating diesel from groundwater in one area, and actions to remedy contamination in groundwater in multiple locations. Some were performed as RCRA interim measures, some as pre-order activities, and some as part of facility upgrades in conjunction with the RCRA Order. Work is continuing today on such actions.

CMS Volumes III through IX, which discuss the different uplands areas at Plant 2, will describe the interim measures and other actions that have been conducted in each area to date, will clarify what contamination still remains at Plant 2, and will evaluate and propose required measures to eliminate sources and pathways to be conducted during Corrective Measures Implementation (CMI). These details are not the intent of this TMCL Technical Memorandum.

~~2.5 ONGOING SOURCE CONTROL WORK~~

~~Over the past several decades, as the activity at Plant 2 has changed from manufacturing to office oriented research and development and warehousing, many historical actual or potential sources of contamination to the waterway have been eliminated. For example, the transition from manufacturing has resulted in the elimination of hundreds of hazardous chemicals and waste generation processes, along with the concurrent decommissioning, cleanup, and interim remedy actions at many inactive RCRA waste management units. Other hazardous materials have been replaced with less toxic alternatives.~~

~~Boeing is removing many of the older buildings and gradually redeveloping much of the area with major upgrades to utilities, including new stormwater conveyance systems. As Boeing continues these activities and works toward completion of its RCRA Order, the following components of source control are being followed:~~

- ~~Stormwater management~~
- ~~Groundwater discharges to the waterway~~
- ~~Removal of contamination that contributes to or may contribute to groundwater or indoor air concerns~~

Formatted: Bullets and Numbering

- Removal of contaminated bank materials that contribute to sediment or waterway contamination from leaching or erosion

The last three components listed above are being addressed subject to the RCRA Order process. However, the first issue – stormwater management – is being addressed through a three-prong approach involving the RCRA, CERCLA, and National Pollutant Discharge Elimination System (NPDES) programs as described below.

2.5.1 Source Control Process for Stormwater

Stormwater falling upon pavement or building roofs is discharged to the Duwamish Waterway under a NPDES/State Waste Discharge General Permit for Stormwater Discharges Associated with Industrial Activities (NPDES Permit), in accordance with the State of Washington Water Pollution Control Law (Chapter 90.48 Revised Code of Washington [RCW]) and the Federal Water Pollution Control Act (The Clean Water Act under Title 33 United States Code, Section 1251 et seq.). The NPDES permit is issued by Ecology and stormwater system sampling, pollutant control, management, and maintenance are conducted in accordance with the Plant 2 Stormwater Pollution Prevention Plan.

In 2005, Boeing conducted a stormwater system survey to further identify constituents in solids retained in catch basins and manhole inserts, and constituents actually being discharged via the Plant 2 stormwater system (Floyd|Snider 2005). In response to high concentrations of PCBs and some metals found in solids collected from a number of catch basins in the 2-60s Area, certain stormwater lines were decommissioned and removed or plugged, and a new collection system was installed to treat and redirect the stormwater prior to discharge.

This and related work began as an independent action with USEPA knowledge and was subsequently shifted to work performed under the RCRA Order. Specifically, a Stormwater Source Control Work Plan (Golder and Floyd|Snider 2006) was prepared by Boeing and approved by USEPA as part of the Uplands RCRA process that outlines the following approach:

- Investigate and document annually the extent to which contaminants are discharging from the Plant 2 stormwater system to the Duwamish Waterway; either dissolved or as suspended solids in stormwater
- Initiate actions to investigate and control any identified sources

This work is underway and will be continued and included as part of the CMI process.

Finally, the CERCLA process for the LDW Site has a substantial requirement for documented source control of releases with the potential to reach the waterway. Boeing has participated with the agency group that handles source control for the Lower Duwamish Waterway and will continue to be involved with the group. This group is expected to develop, as part of the LDW Site process, a set of source control requirements for stormwater that will be applied to Plant 2.

Formatted: Bullets and Numbering

3.0 Nature and Extent of Contamination

The nature and extent of contamination at Plant 2 will be presented in detail in Volumes III through IX ~~of the CMS~~of the CMS and in the Duwamish Sediment Other Area (DSOA) Interim Measure Work Plan. TMCLs have been calculated and are presented for all potential constituents of concern in all media in this Memorandum.

Formatted: Font: Not Italic

Formatted: Font: Not Italic

~~. The presentation in this Section 3.0 is intended to identify potential PCOCs for contaminated media at Plant 2. Sections 4.0, 5.0, 6.0 and 7.0 of this document propose TMCLs for each medium, and compare TMCL values to constituent data throughout Plant 2 in order to identify the subset of those PCOCs that will be further addressed in the CMS process as COCs.~~

~~Chemical analyses are evaluated for each medium (soil, sediment, site-wide groundwater, and shoreline monitoring groundwater) for each chemical using frequency-of-detect tables. Each medium has three tables: one showing all PCOCs with detections at a frequency greater than 5 percent, a second table showing all PCOCs with detections greater than zero and less than or equal to 5 percent, and all parameters with zero detections. This allows the reader to see the breadth of analysis, to identify all detected chemicals (PCOCs), and to better understand which of the PCOCs are more commonly detected.~~

~~For ease of review, results are categorized into metals, volatile organic compounds (VOCs), semivolatile organic compounds (SVOCs), polychlorinated biphenyls (PCBs), and total petroleum hydrocarbons (TPH), with major volatile organics found in TPH grouped below the TPH category. Minimum and maximum detected values are indicated, as well as minimum and maximum reporting limits.~~

~~For all media some of the individual PCB Aroclors are grouped into the following categories:~~

- ~~**Aroclor 1016 and 1242**. This group consists of the combined analytical results from Aroclors 1016, 1242, and 1016/1242, and is given with the CAS number for Aroclor 1242. This was done because most laboratories are unable to distinguish these two very similar Aroclors, especially if they are weathered (refer to congener plots in USEPA 2008).~~
- ~~**Aroclor 1260 and higher.** This group consists of the combined analytical results from Aroclors 1260, 1262, and 1268, and is given the CAS number for Aroclor 1260. This was done because few labs report Aroclor 1262 and 1268, both of which highly overlap the 1260 Aroclor. When measured and detected, their concentration is added to that of Aroclor 1260.~~

Formatted: Bullets and Numbering

~~The following sections identify the PCOCs by media. Sections 4.0, 5.0, 6.0, and 7.0 cover the process through which COCs are determined as each PCOC is evaluated against TMCLs for each media.~~

~~3.1 SOIL~~

~~All soil data collected at Plant 2 were used for this analysis subject to the following conditions:~~

- The result was validated and entered into the Boeing database before August 31, 2008. This encompasses data collected from October 1985 onward.
- The result did not represent soil that was removed during the interim measures or construction activities performed at Plant 2 since 1992. That is, when an interim measure or construction activities removed contaminated soils, the results corresponding to those locations were also removed.

Formatted: Bullets and Numbering

Results are presented in Table 3.1a for PCOCs detected in more than 5 percent of the samples, in Table 3.1b for PCOCs that were detected less than or equal to 5 percent of the samples, and in Table 3.1c for chemicals that were not detected and are not PCOCs.

Metals. As expected, most metals were detected in the majority of samples. The metals that were detected in less than 50 percent of the samples were cadmium, chromium(VI), mercury, molybdenum, selenium, silver, and thallium. Cyanide (an inorganic compound often grouped with the metals) was also detected in less that 50 percent of the soil samples. All detected metals and cyanide will be carried forward as PCOCs for soil.

Volatiles (except for petroleum volatiles). VOCs were dominated by trichloroethene (TCE), tetrachloroethene (PCE) and their breakdown products, methylene chloride, and two ketone-based solvents: acetone and 2-butanone (methyl ethyl ketone). All detected VOCs will be carried forward as PCOCs for soil.

TPH and Petroleum Volatiles. The petroleum volatiles include benzene, toluene, ethylbenzene, and xylenes (BTEX), plus several other alkylated benzenes that were reported by some labs in some years. These volatiles are also captured in the Total Petroleum Hydrocarbons (TPH) analyses. TPH and/or BTEX were detected in up to 40 percent of the soil samples; although benzene was only detected in approximately 6 percent of the samples. TPH and BTEX will be carried forward as PCOCs for soil.

PCBs. Aroclors 1254 and 1260 were detected in more than 5 percent of the samples and are the PCBs that are most common at Plant 2. Aroclors 1242 and 1248 were rarely detected (refer to Table 3.1b). All four Aroclors plus "total PCBs" will be carried forward as PCOCs for soil.

SVOCs. The only SVOCs detected in 5 percent or more of the samples were the polycyclic aromatic hydrocarbons (PAHs) and two phthalates. SVOCs detected at less than 5 percent frequency include phenol, several phthalates, and carbazole. All detected SVOCs will be carried forward as PCOCs for soil.

3.2SEDIMENT

Formatted: Bullets and Numbering

All sediment data collected at Plant 2 since September 1994 within the DSOA sediment "footprint" were used for this analysis subject to the following conditions:

- The data were validated and entered into the Boeing database prior to August 31, 2008. This includes data collected from approximately September 1994 to April 2007 and encompasses multiple sediment sampling events, including sampling efforts by USEPA, the Lower Duwamish Waterway Group (LDWG), and others.

Formatted: Bullets and Numbering

- The data do not represent sediment that was removed during the interim measures performed at Plant 2 since 1992. That is, when an interim measure removed contaminated sediment, the data corresponding to those locations were also removed.

Under the RCRA process at Plant 2, sediments were analyzed for Sediment Management Standards (SMS) constituents to characterize the nature and extent of contamination. Once nature and extent results were known, over 400 additional sediment samples were collected for PCBs (and metals near the SWB) to define the DSOA footprint at Plant 2.

Results are presented in Table 3.2 for the SMS constituents. VOCs and TPH are not part of the SMS constituents. The potential occurrence of TPH in sediments is measured through the presence of PAHs, which are part of the SMS constituents. The potential occurrence of VOCs in sediments was assessed using porewater samples rather than sediment samples and is part of the groundwater discussion in this report.

Metals. All SMS metals were detected and will be carried forward as PCOCs for sediment.

PCBs. Aroclors 1254, 1260, 1248, 1242, and 1232 were detected in sediments; Aroclors 1254 and 1260 were present in more than 50% of the samples analyzed. Congeners were analyzed in 12 sediment samples. PCBs will be carried forward as a PCOC for sediment.

SVOCs. Three phthalates and the PAHs were detected in more than 5 percent of the sediment samples. Two phenols, two chlorinated benzenes, and two additional phthalates were occasionally detected (in less than 5 percent of the samples). All detected SVOCs will be carried forward as PCOCs for sediment.

3.3 GROUNDWATER

Groundwater has two very different risk pathways and points of compliance. Groundwater throughout the Site must be protective of human and ecological terrestrial uses. In contrast, groundwater that discharges to the waterway must be protective of human and ecological aquatic uses. For this reason, the following section distinguishes between PCOCs in site-wide groundwater (which includes the shoreline) and PCOCs in the Shoreline Monitoring Well Network.

All groundwater data collected at Plant 2 since July 1986 (for site-wide groundwater) were used for this analysis subject to the following conditions:

- The result was validated and entered into the Boeing database before August 31, 2008; data collected since that date are not included in this report.

Formatted: Bullets and Numbering

3.3.1 Site-wide Groundwater

Results are presented in Table 3.3a for PCOCs detected more than 5 percent of the samples, in Table 3.3b for PCOCs that were detected less than or equal to 5 percent of the samples, and in Table 3.3c for chemicals that were never detected and are not PCOCs. Site-wide groundwater

~~encompasses all groundwater monitoring wells and direct-push probe data, including the Shoreline Monitoring Well Network, which has been sampled regularly since 2001.~~

~~Of note, many of the direct-push probes (such as Geoprobes®) and early monitoring wells at Plant 2 yielded water that was turbid, resulting in elevated total metals and SVOCs concentrations that did not represent consistent, unbiased groundwater conditions. To combat the bias introduced by uncontrolled turbidity into the data, turbidity measurements were added to the analytical suit so that potentially biased samples could be so identified. However, in assessing site-wide PCOCs, all data were retained irrespective of turbidity, although this conservative approach may overestimate the number of PCOCs for the Site.~~

~~**Dissolved Metals.** Dissolved metals detected in more than 50 percent of the samples include arsenic, barium, nickel, copper, and vanadium, with arsenic and barium being the most prevalent. Rarer dissolved metal detections include chromium, lead, and mercury, which were all below 10 percent. All dissolved metals detected will be carried forward as PCOCs for site-wide groundwater.~~

~~**Total Metals.** Total metals results were similar to the dissolved metals except more metals are consistently detected; therefore, the frequency of detects rises overall. All total metals detected will be carried forward as PCOCs for site-wide groundwater.~~

~~**VOCs (except BTEX).** Three volatiles were detected at greater than 50 percent frequency samples: vinyl chloride, cis-1,2-dichloroethene, and total 1,2-dichloroethene. Other volatiles detected include acetone, TCE, and 1,1-dichloroethane. All volatiles detected will be carried forward as PCOCs for site-wide groundwater.~~

~~**TPH and BTEX.** TPH and major volatile organics associated with TPH were infrequently detected in site-wide groundwater. All components detected will be carried forward as PCOCs for site-wide groundwater.~~

~~**PCBs.** PCBs (total) were infrequently detected in site-wide groundwater, and individual Aroclor detections were associated with Aroclor 1260, 1262, or 1268. In general, PCBs were detected in less than 12 percent of samples taken. Total PCBs and Aroclor 1260 (and higher) will be carried forward as PCOCs for site-wide groundwater.~~

~~**SVOCs.** Relatively few SVOCs were detected in site-wide groundwater. No SVOCs were detected (individually) in more than 10 percent of samples. SVOCs detected typically were more soluble SVOCs, including naphthalene and acenaphthene. Bis(2-ethylhexyl)phthalate (BEHP) was detected infrequently (approximately 5.8 percent). All detected SVOCs will be carried forward as site-wide groundwater PCOCs.~~

~~3.3.2 Shoreline Groundwater~~

~~The Shoreline Monitoring Well Program has been in operation at Plant 2 since April 2001. Since that time, 25 Shoreline Monitoring Events have occurred. All data from the Shoreline Monitoring Program were used to identify PCOCs in shoreline groundwater, including samples from consistently turbid wells. This has the potential to overestimate the number of PCOCs in shoreline groundwater. Trend indicators for contaminant levels that have been calculated for~~

~~each PCOC in each well since 2006 will be applied during the area by area CMS remedy evaluation and selection process.~~

~~Results are presented in Table 3.4a for PCOCs detected more than 5 percent of the samples, in Table 3.4b for PCOCs that were detected less than or equal to 5 percent of the samples, and in Table 3.4c for chemicals that were never detected and are not PCOCs.~~

~~**Dissolved Metals.** Dissolved metals commonly detected in shoreline monitoring well samples include nickel, copper, arsenic, and vanadium. More rarely detected metals in the shoreline monitoring well samples include mercury, zinc, and cadmium. All dissolved metals detected will be carried forward as PCOCs for shoreline groundwater.~~

~~**Total Metals.** Similar to dissolved metals, total metals commonly detected included nickel, copper, arsenic, and vanadium. Mercury, cadmium, and silver were less frequently detected. All total metals detected will be carried forward as PCOCs for shoreline groundwater.~~

~~**VOCs (except BTEX).** Volatiles are infrequently detected (i.e., less than 35 percent of shoreline groundwater samples). The only volatiles detected above 10 percent frequency include vinyl chloride (28 percent), cis-1,2-dichloroethene (33 percent), and trichloroethene (17 percent). All volatiles detected will be carried forward as PCOCs for shoreline groundwater.~~

~~**TPH and BTEX.** TPH has only been analyzed for twice and was detected only once at a low concentration. Benzene is rarely detected (approximately 6 percent frequency of detection). All TPH and TPH components detected will be carried forward as PCOCs for shoreline groundwater.~~

~~**PCBs.** Total PCBs and Aroclor 1260 were detected in approximately 35 of the shoreline groundwater samples, typically from one well in the area near Outfall 12. Aroclor 1254 was detected at one additional well. Total PCBs and these individual Aroclors will be carried forward as PCOCs for shoreline groundwater.~~

~~**SVOCs.** SVOCs were infrequently detected in shoreline groundwater samples. SVOCs detected at greater than 5 percent frequency include several PAHs such as acenaphthene and fluoranthene. Napthalene, fluorene, and phenanthrene were rarely detected. BEHP has been detected; no other phthalates have been detected. 1,2 Dichlorobenze was detected in two samples. All SVOCs detected will be carried forward as PCOCs for shoreline groundwater.~~

4.0 TMCLs for Soil

4.1 DIRECT CONTACT EXPOSURES

4.1.1 Current and Future Land Use

The current land use at Plant 2 includes research and testing, offices, motor pooling and vehicle maintenance, and warehousing of parts and equipment. Some small-scale manufacturing operations are also ongoing in conjunction with research and testing functions. Except for the shoreline in the North Area, Plant 2 is a fenced, paved, and access-controlled property. Additional details on adjacent facilities and zoning is presented in Section 2.0.

Future uplands land use at Plant 2 is expected to remain industrial, which is consistent with local area land use controls and deed restrictions. Boeing expects to establish restrictive covenants to ensure that land use remains industrial at the Site.

4.1.2 Risk Management Areas

To facilitate the discussion of TMCLs for soil and sediment, the Site has been divided into three risk management areas, as follows:

- The Industrial Risk Management Area (IRMA) is that section of the Plant 2 facility that is fenced, paved or covered by buildings, and access-controlled.
- The Sediment Risk Management Area (SRMA) is that section of the Lower Duwamish Waterway that is contained within the footprint of the DSOA, including the banks to the top of the bank, and the complete SWB Interim Measures footprint. This area is defined in detail in the *Duwamish Sediment Other Area and Southwest Bank Interim Measure Alternative Evaluation* (AMEC and Floyd|Snider 2008).
- The Shoreline Risk Management Area (Shoreline RMA), which is located between the IRMA and ~~SMRA~~SRMA. -The importance of the Shoreline RMA is that it has the potential to include unpaved shoreline areas that are above the top of the bank and are neither aquatic nor industrial in nature. Under current land use, the Shoreline RMA includes the Northern Shoreline RMA and the SWB Interim Measure as shown in Figure 4.1.

4.1.3 Residential and Industrial Exposures

~~USEPA Region X has instructed Boeing to develop residential TMCLs for Plant 2 in addition to the industrial TMCLs, which were specified in the approved RCRA Work Plan (Weston 1998). USEPA has stated that they intend to use the residential TMCLs as an "unrestricted land use baseline"; however, USEPA has also stated Boeing may apply industrial TMCLs if accompanied by a properly coordinated restrictive covenant for the property.~~ In accordance with the Order, US EPA Region X has instructed Boeing to develop residential TMCLs for Plant 2. USEPA has stated that it intends to use the residential TMCLs as an "unrestricted land use baseline;"

Formatted: Font: Not Italic

however, USEPA has also stated that Boeing may propose industrial FMCLs in this Memorandum with the understanding that the proposed FMCLs may or may not be applicable to the Corrective Measures Implementation.

The following tables and discussion include both residential TMCLs and proposed industrial FMCLs for soil.

As requested by USEPA, TMCLs and potential FMCLs for soil were developed from the following two sources:

- USEPA's Regional Screening Levels (RSLs) for Chemical Contaminants at Superfund Sites were used for both residential and industrial exposures. Where appropriate, carcinogenic risk has been modified to 10^{-5} for the industrial scenario.
- MTCA standard Method C industrial and Method B residential exposures using generic default assumptions to calculate cleanup levels as per WAC 173-340-745 and WAC 173-340-740. Modified Method C and Method B exposures were also calculated to include dermal contact (and inhalation for volatiles) in addition to ingestion.

The result of the soil calculations are presented in Tables 1, 3, 4, and 7. For a few constituents, the background value was used for the TMCL.

~~The following tables and discussion include both residential and industrial TMCLs for soil.~~

~~As requested by USEPA, TMCLs for soil were developed from the following two sources:~~

- ~~USEPA's Regional Screening Levels for Chemical Contaminants at Superfund Sites were used for both residential and industrial exposures. These values, sometimes called USEPA Region VI Screening Levels, have been updated recently via collaboration with Oak Ridge National Laboratories (ORNL) and are currently available through USEPA Region III's website. These numbers incorporate ingestion, ingestion, dermal exposure, and inhalation of dust and are therefore conservative. Where appropriate, carcinogenic risk has been modified to 10^{-5} for the industrial scenario.~~
- ~~MTCA standard Method B industrial and residential exposures using generic default assumptions to calculate cleanup levels as per WAC 173-340-745(5).~~

~~Tables 4.1a through 4.1c present the results of these calculations and the proposed TMCLs for soil PCOCs identified in Section 3.0. The lower value (between the USEPA Region III and MTCA values) was selected as the direct contact TMCL for soil. Additionally, for metals, Puget Sound Regional background concentrations are included in the screening.~~

~~The TMCL was then compared to the maximum soil sample concentrations from 1988 to mid-2007 to identify those PCOCs that exceed the soil TMCLs. Constituents that exceed the residential soil TMCL will be carried forward as COCs into the CMS. Because residential use is not an anticipated land use, and deed restrictions/restrictive covenants may be used to specify~~

Formatted: Font: (Default) Arial, 11 pt, Not Italic

Formatted: Bullets and Numbering

Formatted: Font: Not Italic

Formatted: Adjust space between Latin and Asian text, Adjust space between Asian text and numbers

Formatted: Bullets and Numbering

~~that land use remain industrial, both residential and industrial soil TMCLs will be available for use as appropriate in the CMS.~~

~~In Tables 4.1a through 4.1c, an exceedance factor for each land use scenario is shown, which is the maximum concentration divided by the residential or industrial TMCL. Use of this exceedance factor is helpful in indicating which constituents may occur in concentrations significantly above these TMCLs or perhaps occur only slightly over the TMCL. Finally, the last column in each table indicates whether the chemical exceeded residential or industrial standards, or both. Since residential TMCLs are always lower than industrial TMCLs, there are no instances of constituents exceeding industrial TMCLs, but not residential TMCLs. However, there are numerous instances of constituents exceeding only the residential TMCL, such as methylene chloride, zinc, and cyanide. These are, therefore, carried forward as COCs but only on the basis of unrestricted future land use.~~

~~**Area-by-Area Screening.** Because Volumes III through IX of the CMS deal with each of the seven areas at Plant 2 separately, Table 4.2 presents exceedance factors by area. This is a straight-forward way to see which areas generally contain high concentrations of COCs as well as the type of COC and the likely COC "drivers" for cleanup by area. Table 4.3 lists COCs by area. Again, this is an easy way to see which COCs are more ubiquitous site-wide, which COCs are present in one or few areas, and/or which areas have multiple COCs.~~

~~Obviously, other constituents may be added to this list based on future data gaps investigation results. The area-by-area volumes of the CMS will evaluate the COCs with respect to the age of the data (i.e., whether higher concentrations are associated with older data) and data from areas where in situ interim measures have occurred and current COC concentrations may have declined.~~

4.1.4 Trenching Exposures

USEPA Region X requested that Boeing develop a trenching scenario as part of the development of soil and groundwater TMCLs. For soil, the trenching scenario is less restrictive than either the industrial or residential scenarios listed above; therefore, it does not control the selection of soil TMCLs. Nevertheless, this scenario has been included here for completeness. For groundwater TMCLs discussed in Section 6.0, trenching is more important.

Trenching during construction was considered as a possible exposure pathway, although Boeing standard practice is to take steps to ensure the health and safety of such workers in all situations. ~~Attachment F~~Attachment E concerns trenching and contains further description and calculations. In this scenario, trenching activities are conducted by an adult industrial worker in the most contaminated area of the Site. This is an intense adult exposure scenario in which the ingestion rate (300 mg of site soil per day) is elevated for a short time. Trench workers are subjected to these conditions 5 days a week for 2 weeks per year spent at the Site as per USEPA guidance (USEPA 2000). The trench floor has dimensions of 3 x 1 m^2, and a depth of 1.2 m. This is the approximate depth up to which trenching activity can occur without additional protective measures, such as trench boxes. The trench was assumed to be excavated from a single soil stratum in which all of the soil is contaminated. Exposure routes considered are inhalation, dermal, and ingestion at 300 mg/day. VOCs plus elemental mercury (as evaluated in

vapor intrusion) were evaluated for the inhalation pathway (i.e., vapor exposure); for ingestion and dermal pathways, all constituents were evaluated (i.e., those shown in Tables ~~4.1a~~1 through ~~4.1c~~8).

Results are shown in Table ~~4.4~~s 9 through 11~~.~~. In general, only a few constituents appear to have trench soil screening levels lower than the lowest proposed industrial ~~TMCL~~ FMCL values. This is not surprising given the shorter duration of the trenching activities versus year-round exposures in standard industrial exposure scenarios.

Given the limited number of exceedances, most of which are already identified as COCs on the basis of other soil screening values, and the fact that all trenching at Boeing requires a Health and Safety Plan that addresses all possible contaminants present in soils (and groundwater if applicable), trenching screening level exceedances are not carried forward as COCs.

4.1.5 Soil to Groundwater Pathway Exposure

A pathway exists from the contaminated soils in the Uplands of Plant 2 into the groundwater. Once contaminated, this groundwater discharges into the sediments and water of the LDW. The receptors in the LDW include not only the sediments and benthic organisms residing in the sediments, but also the aquatic species and ultimately humans via the food chain. To account for this, values have been calculated using the MTCA three-phase partitioning model (WAC 173-340-747) which uses groundwater CULs derived by EPA to be protective of surface water. EPA used quantitative adjustment factors for: early-life exposure to carcinogens with a mutagenic mode of action; the tribal child fish consumer at 40% of the adult tribal fish consumption rate; the Asian and Pacific Islander adult and child fish consumers; and dermal exposure for all direct contact with soil pathways. These values are included in Tables 1 through 8.

Formatted: Font: Not Italic

Formatted: Font: Not Italic

Formatted: Font: Not Italic

4.2 OTHER EXPOSURES

Two additional exposure pathways have been considered at Plant 2: vapor intrusion into buildings and direct contact pathways for terrestrial ecological receptors.

Vapor intrusion by volatile ~~P~~ COCs from both soil and groundwater is considered relevant and is discussed in Section 7.0, and its associated Attachments ~~C~~ B and ~~D~~C.

Direct contact between soil and terrestrial ecological receptors is currently blocked by paving, buildings, and the industrial nature of the facility. As requested by USEPA, specific "scoring" of the Site for ecological evaluation was made under MTCA using Table 749-1: Simplified Terrestrial Ecological Evaluation Exposure Analysis under WAC 173-34007492(2)(a)(ii). Based on this evaluation, no ecological assessment is needed at this time. Because this pathway is currently blocked by ~~an institutional control consisting of~~ pavement and buildings, and by Boeing management practices, ongoing industrial land use will depend on maintaining that control through deed restrictions and/or restrictive covenants and ongoing physical controls, ~~or establish that such controls are not needed.~~ Should land use change in the future, a more detailed ecological evaluation would be conducted at that time.

4.3 POINT OF COMPLIANCE

The point of compliance (POC) for soil is throughout the vadose zone (upper 12-feet bgs) over the entire uplands site (IRMA and Shoreline RMA).

In the Shoreline RMA, surface soil along the shoreline may also need to comply with sediment TMCLs (as described in Section 5.0) to protect the DSOA corrective measure.

If the Shoreline RMA is expanded in the future to include presently paved areas, soils in the then expanded Shoreline RMA will need to be made protective of terrestrial receptors at that time.

5.0 TMCLs for Sediments

5.1 SEDIMENT CONDITIONS

TMCLs for sediments in the LDW are intended to protect benthic and pelagic aquatic species using the LDW and humans who may consume seafood from the LDW. The Sediment Quality Standards (SQS) of the Washington Sediment Management Standards (SMS) are numerical standards developed for the protection of benthic invertebrate organisms. These are the only organisms for which SMS numerical standards have been promulgated to date. WAC 173-204-570)(4) requires site specific cleanup standards to be as close as practicable to the SQS, also called the "cleanup objective," but no higher than the Cleanup Screening Level (CSL), also called the "Minimum Cleanup Level." WAC 173-204-570(5) requires that all cleanup standards must ensure protection of human health and the environment. Human health SMS numerical criteria are reserved for site-specific determination. Due to bioaccumulation in the food chain some aquatic species above benthic invertebrates in the food chain could require more stringent protection than the SQS. Currently, these do not need to be specified or developed further because the risk to human seafood consumers is consistently greater (see LDW RI/FS human health risk assessment). Risk-based concentrations (RBCs) of PCBs, as a driver COC for the protection of human seafood consumers, based on calculations using the Tribal Risk Framework consumption rate of 97.1 grams/day i.e., (approximately 3.5 ounces/day) are more stringent than background levels (see LDW RI/FS human health risk assessment)). MTCA requires that where RBCs are more stringent than background, cleanup standards for final remedies must achieve natural background levels, while interim actions may achieve anthropogenic background levels. As such, the TMCLs for the sediments will be based on these standards and are contained in Table 12."

The sediment TMCLs for Plant 2 apply to surface sediments in the intertidal and subtidal areas. These areas will consist of clean material placed during the proposed interim measure. In areas where erosion or direct contact is possible, the sediment TMCLs will also be applied to the bank sediment. Monitoring of the new, clean sediment surface will be performed to assess the rate of recontamination, if any, that may migrate from outside the remedy area. Monitoring of groundwater also will be performed to assess the rate and potential for contamination present in the groundwater to affect the clean sediment backfill material. The groundwater to sediment pathway is discussed in the following section~~The sediments in front of Plant 2 in the Lower Duwamish Waterway occur in an estuarine environment. Intertidal and subtidal sediments are saline; bank sediments are brackish to fresh depending on the height of the bank. The banks are steep and typically covered with rip-rap. Two large building complexes extend over sediments and/or bank areas: Building 2-10 and a complex of buildings in the 2-40s Area. A more detailed description of the sediments in the DSOA and SWB is presented in the "DSOA and Southwest Bank Interim Measure Alternatives Evaluation" (AMEC and Floyd|Snider 2008).~~

~~TMCLs for sediments in the Lower Duwamish Waterway are intended to protect both aquatic species using the waterway (both benthic and pelagic) and humans who consume seafood from the waterway. Under the RCRA Order for Plant 2, the selection of TMCLs for protection of aquatic species is straightforward because there are well-established promulgated standards from Ecology that have been accepted by USEPA.~~

Formatted: Font: Not Italic

Formatted: Adjust space between Latin and Asian text, Adjust space between Asian text and numbers

Formatted: Font: Not Italic

~~For protection of human health, the situation is much more complex. First, there are no promulgated standards. Second, there is still significant scientific debate on which chemicals bioaccumulate in seafood. Only a few persistent chemicals, such as PCBs and PAHs, have been well-studied. Third, for persistent, bioaccumulative chemicals, such as the PCBs, conservative, risk-based standards based on high consumption rates of locally caught seafood result in proposed cleanup levels that are below area-wide background concentrations. Cleanup of specific sites, such as Plant 2, to concentrations that are below area-wide background would be subject to recontamination from the adjacent sites. For all these reasons, the establishment of TMCLs to protect humans consuming seafood needs to be done for all of the Lower Duwamish Waterway and not at isolated sites. Fortunately, the LDWG and the Agencies are already working on this issue for the LWD Site. As discussed in more detail below, Plant 2 is deferring the establishment of human health sediment cleanup levels to the LDW Superfund process.~~

~~5.2 SEDIMENT MANAGEMENT STANDARDS~~

~~Washington State has federally approved sediment quality standards for marine waters that are promulgated as the Sediment Management Standards (SMS; Chapter 173-204 WAC). There are two levels of standards of chemical criteria in the SMS:~~

- ~~The Sediment Quality Standards (SQS) defined in Table 1 of WAC 173-204. These These standards correspond to "no acute or chronic adverse effects on biological effects on biological resources and no significant health effects to humans (WAC effects to humans (WAC 173-204-320 [1][a]). Below these chemical concentrations, concentrations, the sediments are determined to have "…no acute or chronic acute or chronic adverse effects…" as described above.~~
- ~~The Cleanup Screening Levels (CSLs) defined in Table 3 of WAC 173-204. These standards correspond to levels where adverse effects may occur. At chemical concentrations above these standards, sediments would be determined to have adverse effects on biological resources.~~

Formatted: Bullets and Numbering

~~If sediments have chemical concentrations between the SQS and CSL and do not exceed the CSL, the sediments are determined to have only minor adverse effects on biological resources.~~

~~The SMS also define minimum cleanup levels (MCULs), whose numerical values are identical to the CSL values (Table III of WAC 173-204). WAC 173-204-570 (4) then also specifies that the site-specific cleanup levels established shall be between these two numbers as follows: "The site-specific cleanup standards shall be as close as practicable to the cleanup objective (i.e., the SQS), but in no case shall exceed the minimum cleanup level."~~

~~Table 5.1 presents the SQS and CSL/MCUL marine sediment standards for the State of Washington. These promulgated standards are proposed as the sediment TMCLs. The SQS and CSL/MCUL criteria are based on Puget Sound Apparent Effects Threshold (AET) values (Barrick et al. 1988). For non-polar organic compounds, the SQS and CSL/MCUL criteria are expressed on an organic carbon normalized basis (i.e. mg/kg organic carbon). For those chemicals, comparisons of sediment chemical concentrations with these criteria are appropriate~~

~~when the total organic carbon content of the sediment is between 0.5 and 4.0 percent. If the total organic carbon content of the sediment is less or greater than this range, it is more appropriate to compare the sediment chemical concentrations with the Lowest Apparent Effects Threshold (LAET) or the Second Lowest Apparent Effects Threshold (2LAET) values, which are expressed on a dry weight basis. The LAET and 2LAET values are functionally equivalent to the SQS and CSL/MCUL values, respectively. Because the DSOA sediments often have low organic carbon contents (i.e., less than 0.5 percent), the maximum sediment concentrations of PCOCs were compared with the LAET values to identify COCs. Table 5.2 presents those PCOCs that exceed the SMS SQS and are retained as COCs for the sediments. This includes all SMS metals, (except for arsenic), PCBs, acenaphthene, high molecular weight PAHs, and three phthalates.~~

~~5.3 HUMAN HEALTH CONCERNS FOR BIOACCUMULATIVE CHEMICALS~~

~~Significant additional analyses of sediments and seafood tissue have been performed as part of the Lower Duwamish Waterway RI/FS under Superfund (refer to Section 1.0 for details). The results of these analyses were presented in the final baseline human health risk assessment for the Site, which is dated November 12, 2007 and included as Attachment B to the Lower Duwamish Waterway Remedial Investigation (Windward 2007). Based on the findings of the Lower Duwamish Baseline Human Health Risk Assessment, it is possible that the SMS SQS for the following constituents may not be protective of human health based on the consumption of seafood at tribal consumption rates in the Lower Duwamish Waterway (including at Plant 2):~~

- ~~PCBs~~
- ~~Carcinogenic PAHs (in shellfish)~~
- ~~Chlorinated dioxins and furans~~
- ~~Arsenic (in soft shelled clams)~~

Formatted: Bullets and Numbering

~~The LDWG and the Agencies are continuing to address this issue and to develop cleanup approaches for the Lower Duwamish Waterway, including Plant 2, that will be protective. These decisions may influence the final decisions at Plant 2 under the RCRA Order.~~

~~The impact of this issue on the proposed DSOA and SWB interim measure is minimal because the interim measure will remove contaminated sediment within a specified footprint to the depth of SQS exceedances based on prior sampling results, and then backfill the area with clean back fill.~~

5.~~4~~2 POINT OF COMPLIANCE

The sediment TMCLs for Plant 2 apply to surface sediments in the intertidal and subtidal areas. These areas will consist of clean backfill placed during the proposed interim measure. In areas where erosion or direct contact is possible, the sediment TMCLs will also be applied to the bank sediment. Monitoring of the new, clean sediment surface will be performed to assess the rate of recontamination, if any, that may migrate from outside the remedy area. Monitoring of groundwater also will be performed to assess the rate and potential for contamination present in

the groundwater to affect the clean sediment backfill material. The groundwater to sediment pathway is discussed in the following section.

6.0 TMCLs for Groundwater

6.1 GROUNDWATER USE

6.1.1 Highest Beneficial Use of Groundwater

Cleanup levels for groundwater are dependent upon the existing and potential future uses of that groundwater. The National Contingency Plan states that "EPA expects to return usable ground waters to their beneficial uses" (40 CFR §300.430[a][1][iii][F]). Generally, the beneficial use of groundwater is either for drinking (i.e., when potable) or for discharge to nearby surface waters. ~~MTCA (WAC 173-340-720[2]) specifies criteria that must be met in order to classify groundwater as non-potable.~~

~~An extensive study of the hydrogeology in the Duwamish Industrial Area (the Hydrogeologic Pathways Project) was conducted by the City of Seattle Office of Economic Development and the King County Office of Budget and Strategic Planning in order to improve the quality and pace of cleanup-related decision making for the area, which encompasses Plant 2 (Duwamish Coalition 1998). As part of the Hydrogeologic Pathways Project, the "Technical Memorandum: Shallow Groundwater Use Designation (Floyd and Snider, Inc. and Hart Crowser 1998) designated the highest beneficial use of shallow groundwater in the Duwamish Valley, including the area where Plant 2 is located, as discharge to surface water and not as a drinking water source. In a letter from Ecology's Toxics Cleanup Program to the City of Seattle and King County, the products of the Hydrogeologic Pathways Project were found to be "suitable for use by site managers and others in making site-specific cleanup decisions" (Pendowski 2000). Thus, using the Hydrogeologic Pathways Project as intended, Plant 2 groundwater is considered non-potable and has a highest beneficial use of discharge to the surface water of the Lower Duwamish Waterway.~~

~~Concentrations in groundwater must also be protective of other possible exposure scenarios. At Plant 2, the other possible exposures for contaminants in groundwater are through vapor intrusion into buildings and trenches. These two scenarios are evaluated in Section 7.0.~~ Potability is determined empirically using criteria in WAC 173-340-720(2). While a majority of Plant 2 groundwater may not be potable due to factors in WAC 173-340-720(2), significant discrete areas of groundwater at Plant 2 may be potable. In any case, in accordance with WAC 173-340-720(1)(i), more stringent cleanup levels may be required to protect sensitive subgroups. The DSOA encompasses American Indian usual and accustomed fishing areas pursuant to treaties of the United States. Northwest tribal populations claim to, and are well known to, consume locally harvested fish and shellfish at a higher rate than the general U.S. population. For this reason, the "Draft Framework for Selecting and Using Tribal Fish and Shellfish Consumption Rates for Risk-Based Decision Making at CERCLA and RCRA Cleanup Sites in Puget Sound and the Strait of Georgia" (Tribal Risk Framework) provides appropriate guidance for determining exposures used in calculating risk based Target Media Cleanup Levels. Fish and Shellfish consumption rates derived using this Framework provide more human health-protective cleanup levels than other promulgated or calculated groundwater levels. Maximum Contaminant Levels (MCLs) which may apply in discrete areas, MCTA

Formatted: Indent: Left: 0.01", Don't adjust space between Latin and Asian text, Don't adjust space between Asian text and numbers

Method A, and MCTA Method B groundwater CULs have been included in this Memorandum for comparative purposes.

Formatted: Font color: Black

6.1.2 Beneficial Uses of Lower Duwamish Waterway Surface Water

The following beneficial uses of the Duwamish River from its mouth to river mile 11.0 (inclusive of the Lower Duwamish Waterway) are set forth in WAC 173-201A-602 (Table 602, revised and implemented by Ecology, December 2006, and pending approval by USEPA under the Clean Water Act): salmonid rearing and migration, industrial/agricultural water supply, stock watering, wildlife habitat, secondary contact recreation, boating and sport fishing, and commerce and navigation. Importantly, the Lower Duwamish Waterway is not designated as a potential drinking-water source. Therefore, numerical surface water standards for human health are based on consumption of aquatic organisms (e.g., fish and shellfish), and do not include drinking water.

While WAC 173-201A designates the Duwamish River as fresh surface water, the Duwamish Waterway in the vicinity of Plant 2 is actually a tidally-controlled marine embayment with a thin freshwater lens of out-going river water on top of the denser (more saline) and more predominant marine waters. The sediments, while alluvial in nature, have salinities consistent with the marine waters from Elliott Bay. However, due to the presence of the freshwater lens of water over this more dense saline water and~~,~~ for the purposes of calculating Plant 2 TMCLs, the Lower Duwamish Waterway surface water adjacent to Plant 2 will be considered both marine and freshwater.

6.1.3 Designation of Marine vs. Freshwater Criteria

For discharge into the water column, both freshwater and marine standards have been considered, although the majority of the water column is saline, except during extreme storm events. The salinity keeps the water from being potable and influences the biota present; however, some freshwater species use the waterway, especially in the upper sections of the water column.

6.2 PROTECTION OF SURFACE WATER ~~FOR AQUATIC SPECIES~~

Surface water is not a contaminated media at Plant 2, but groundwater is. In order to establish groundwater TMCLs that are protective of surface water, it is necessary to define concentrations in surface water that are protective of aquatic species, and then establish groundwater TMCLs that are protective of these surface water concentrations.

~~A number of promulgated standards are used to establish surface water concentrations that are protective of aquatic species in the Duwamish Waterway along Plant 2. These are discussed below. When no promulgated standards exist, as is the case for many of the VOCs, literature information regarding toxicity has been used.~~The most stringent of the promulgated standards referenced in this paragraph along with adjusted values from calculations applying the Tribal Risk Framework is used to establish surface water concentrations that are protective for both aquatic species and human health in the LDW along Plant 2, as provided in the attached Tables. The promulgated standards are Ambient Water Quality Criteria established under

Formatted: Don't adjust space between Latin and Asian text, Don't adjust space between Asian text and numbers

Formatted: Font: Not Italic

Sections 303-304 of the Clean Water Act (33 U.S.C. 1313-14) which may be found at http://www.epa.gov/ost/criteria/wqctable, and the National Toxics rule at 40 CFR 131.36, and Washington State Surface Water Quality Standards at RCW 90-48 and WAC 173-201A, both chronic and acute, and marine and freshwater standards, and values based on MTCA Method B at WAC 173-340-730(3).

Formatted: Font: Not Italic

Formatted: Font: Not Italic

~~6.2.1 Promulgated Surface Water Quality Standards for Protection of Aquatic Species~~

~~Table 6.1a, Table 6.1b, and Table 6.1c contain the promulgated standards for the protection of marine and freshwater aquatic organisms for all PCOCs for shoreline groundwater. As discussed in Section 3.3, all constituents detected in the Shoreline Monitoring Program have been carried forward as PCOCs for groundwater. The promulgated standards shown in the tables include:~~

- ~~National Toxics Rule 40 CFR 13~~
- ~~National Recommended Water Quality Criteria~~
- ~~Washington State Surface Water Quality Standards WAC 173-201A~~

Formatted: Bullets and Numbering

~~The lowest of these standards becomes the TMCL for groundwater for the protection of aquatic species. The FMCL developed during the CMS may consider attenuation, including biodegradation, between the surface water and the groundwater monitoring wells.~~

~~The following PCOCs for shoreline groundwater exceed the TMCL for protection of aquatic species and thus become COCs: PCBs (Aroclor 1260 and total PCBs), and the metals nickel, cadmium, copper, mercury, selenium, silver, and zinc. The above standards do not address the VOC PCOCs at Plant 2, which are covered in the next Section 6.2.2.~~

Formatted: Don't adjust space between Latin and Asian text, Don't adjust space between Asian text and numbers

~~6.2.2 Risk-based Screening Levels for VOCs for Protection of Aquatic Species~~

~~There are no promulgated standards available for the protection of aquatic organisms (i.e., toxicity) for VOCs, as shown in Table 6.1b. However, there are some ecologically relevant toxicity data available in the literature.~~

~~LDWG conducted an extensive literature review of available VOC toxicity data as part of its porewater sampling and analysis document (LDWG 2005). Table 6.2 shows these resultant available risk-based VOC screening levels, and shows the screening results of these concentrations against maximum groundwater concentrations detected in the Shoreline Monitoring Well Network at Plant 2.~~

~~Based on this screening, two PCOCs, ethylbenzene and cis-1,2-dichloroethene, have concentrations in the shoreline wells that exceed the lowest risk-based value found in the literature, as shown in Table 6.2. These two PCOCs are carried forward as COCs in shoreline groundwater for the protection of aquatic species based on screening against these literature toxicity values.~~

~~6.3 PROTECTION OF SURFACE WATER FOR HUMAN HEALTH~~

~~Surface water quality must also be protected for human consumption. As discussed in Section 6.1, water in the Lower Duwamish Waterway is not used for drinking water but is used for fishing. A potential pathway exists as follows: contaminants in groundwater discharge to the Lower Duwamish Waterway where they bioaccumulate in the fish or shellfish tissues; the fish or shellfish are then caught and consumed, resulting in a human health exposure to constituents from Plant 2 groundwater.~~

~~Water quality standards based on this exposure pathway have been promulgated by both the federal government and Washington State, and are discussed below.~~

~~6.3.1 Promulgated Standards for Consumption of Seafood~~

~~Table 6.3 contains the promulgated surface water standards for the protection of human health based on consumption of seafood for all shoreline groundwater PCOCs. As discussed in Section 3.3, all constituents detected in the Shoreline Monitoring Program have been carried forward as PCOCs for groundwater. The first two columns (Columns A and B) summarize the Shoreline Monitoring Program results for the PCOCs, and the following Column C lists background groundwater concentrations for the three metals with backgrounds that are higher than some of the standards (these background values have been approved by USEPA for use at Plant 2). The next four Columns list the promulgated standards for protection of human health, specifically:~~

- ~~National Toxics 40 CFR 131 (shown in Column D)~~
- ~~National Recommended Water Quality Criteria CWA §304(a)1 (shown in Column E)~~
- ~~Washington State Surface Water Quality Standards WAC 173-201A (shown in Column F)~~
- ~~MTCA standard Method B in WAC 173-340-730 (3) for the protection of human health through fish consumption (shown in Column G)~~

Formatted: Bullets and Numbering

~~As discussed in Section 2.0, the water in the Lower Duwamish Waterway is not potable, so the standards for consumption of seafood only (and not drinking water) have been used. The first Column after the tabulated standards, Column H, lists the lowest of the promulgated standards.~~

~~Column I identifies which PCOCs have maximum shoreline concentrations greater than the lowest of the promulgated standards. Of note, while all of the standards above are applicable to surface water, screening of maximum groundwater concentrations against these standards is an extremely conservative assessment because there is no allowance of attenuation between the shoreline monitoring wells and the point of discharge to the waterway.~~

~~6.3.2 Adjustment to the Standards to Reflect Tribal Seafood Consumption~~

~~USEPA Region X has developed a Tribal Seafood Consumption Framework for Puget Sound (USEPA 2007). It assumes that tribal populations may consume more locally caught fish and shellfish than the seafood consumption rate used to develop the promulgated standards. For~~

~~Plant 2, USEPA instructed Boeing to use the Tulalip tribal consumption rate. The consumption rate of 97.5 g/day for a tribal adult is approximately twice the consumption rate of 54 g/day used to develop the state standards. Based on the LDWG's Tribal adult reasonable maxmimum exposure (RME) scenario in the Lower Duwamish Waterway Baseline Human Health Risk Assessment (Windward 2007), protective tribal adult standards were calculated using USEPA risk assessment guidance equations (USEPA 1989 and 2005). The "adjusted" standard is presented in Table 6.3 in Column J. PCOCs are identified which have maximum shoreline concentrations greater than the "adjusted" standard.~~

~~As shown in Table 6.3, the Tulalip tribal adult human health standard is the lowest of the available standards based in part on the higher consumption rate (97.5 g/day instead of 54 g/day), but also on the longer exposure duration (64 years versus 30 years) and the assumption that all of the seafood consumed comes from the local area. Importantly, the Tulalip tribal adult RME is extremely conservative due in part to this diet fraction assumption and consumption rate. Application of this RME to Plant 2 is even more conservative in a Plant 2 specific context, given the smaller size of Plant 2 relative to the entire Lower Duwamish Waterway and the underlying assumptions about diet fraction relative to Plant 2's size. More information about the differences between MTCA B assumptions and the Tribal RME can be found in Attachment E.~~

~~Besides adjusting all of the state standards lower, the use of the Tribal Seafood Consumption Framework adds two additional constituents, silver and BEHP, that exceed the standards. Silver is retained as a new COC. However, BEHP is not proposed for retention as a COC because it was detected in less than 3 percent of the shoreline groundwater samples and its maximum detected concentration was 1.3 µg/L in a highly turbid sample versus an adjusted standard of 1.2 µg/L. In a similar manner, all COCs will be evaluated during CMS Report preparation on an area-by-area basis to properly reflect all data attributes~~

6.3. Consideration of Tribal and Asian and Pacific Islanders' Seafood Consumption Rates

Formatted: Font: Bold

USEPA Region 10 published the document "Framework for Selecting and Using Tribal Fish and Shellfish Consumption Rates for Risk-Based Decision Making at CERCLA and RCRA Cleanup Sites in Puget Sound and the Strait of Georgia" (USEPA, 2007). It is based on fish and shellfish consumption studies of tribes, primarily the Tulalip Tribes and the Suquamish Tribe. For Plant 2, USEPA instructed Boeing to use the Tulalip Tribes' consumption rate, minus salmon and minus fish and shellfish harvested outside Puget Sound. EPA made the following assumptions in providing this direction to Boeing:

1) the Tulalip Tribes' consumption rate is likely more appropriate for the LDW area than is the Suquamish Tribe's rate, because the LDW is unlikely – even under "clean" conditions – to have sufficient intertidal shellfish habitat to sustain the high rate of shellfish consumption that the Suquamish Tribe enjoys;

Formatted: Indent: Left: 0.5"

2) all fish and shellfish harvested from outside Puget Sound are assumed to not be contaminated by releases from Plant 2; and

3) salmon are assumed to be exposed to the chemicals present in their tissues when caught as adults in the LDW from remote locations in Puget Sound or the open ocean.

There are many uncertainties associated with these assumptions, addressed in the Framework. The Framework specifically addresses the uncertainties associated with the third assumption above with this language:

> PCBs and other bio-accumulative and persistent chemicals found in contaminated sediments can be moved from their site of release via erosion, dredging, tidal currents, flood events, and vapor transport. Offsite transport is also possible when aquatic organisms become contaminated near a cleanup site and then migrate to distant locations, where they contribute to food chain effects that eventually affect fish, including adult salmon. However, adult salmon body burdens of bio-accumulative and persistent contaminants typically come from many sources and cannot currently be apportioned with confidence to specific locations. An assumption that contaminants present in harvested salmon are not associated with the site, even when the same chemicals have been released from the site, is likely to underestimate the site's contribution to risks from consuming such fish. The degree of underestimation is not known.
>
> If the full body burden of bioaccumulative and persistent contaminants released at a site and found in local salmon is attributed to a single source (*i.e.*, the site under evaluation), site contributions to risk are likely to be overestimated, since some portion of the body burden likely has been acquired elsewhere.
>
> Some site-related contaminants may bioconcentrate in adult salmon due to epithelial tissue or gill contact, depending in part upon the salmon residence time in the vicinity of the site-related contamination. Making an assumption that adult salmon do not reside in the vicinity of the site long enough for bioconcentration to occur could result in an erroneous exclusion of contaminants in salmon from the site-related risk assessment. An assumption that bioconcentration does occur could lead to an overestimation of risks if uptake does not occur.

The total fish and shellfish consumption rate for the Tulalip Tribes, based on a 95th percentile consumer-only consumption rate for benthic fish, pelagic fish, shellfish and salmon is 243 g/day. After adjusting for Puget Sound-harvested fish and shellfish only and assuming that the site related PCB contaminant body burden for salmon is zero, the effective consumption rate to be used for Plant 2 is 97.1 g/day. Pursuant to recommendations in the Framework, the tribal exposure duration is assumed to be 70 years (instead of the standard 30 years in a risk assessment) to account for a lifetime of eating fish and shellfish from a specific harvesting area. The average body weight of the adult participants in the study, 81.8 kg, is also used. The consumption rate for children was estimated to be 38.8 g/day, which is 40% of the adult rate, an option provided in the Framework.

Also accounted for are the seafood consumption rates of Asian and Pacific Islanders (A&PI) who harvest from the LDW and Elliott Bay and may be exposed to chemical releases from Plant 2 in this manner. USEPA funded and participated in a study (Sechena et al., 1999) to estimate the amount and types of seafood consumed by the A&PI population in King County. The 95th percentile total seafood A&PI consumption rate is 305.7 g/day. The seafood harvested and consumed by A&PIs only from King County waters, was estimated and assumed to be the amount of seafood potentially affected by Plant 2 releases and hence associated with Plant 2 A&PI seafood consumption risks. This amount, for adults, is 57.1 g/day, extrapolated to a child rate of 23 g/day based on 40% of the adult rate. The average adult study participant body rate of 63 kg was used. As USEPA had no information regarding exposure duration based on consistency in harvesting from certain areas over a lifetime, the standard exposure duration of

Formatted: Indent: Left: 0.5"

Formatted: Font: (Default) Arial

Formatted: Indent: Left: 0"

Formatted: Font: (Default) Arial

Formatted: Indent: Left: 1"

Formatted: Font: Not Italic

Formatted: Font: Not Italic

Formatted: Indent: Left: 0", Right: 0"

30 years was used for this population. These exposure assumptions, including the adjusted seafood consumption rate, have been adopted by Ecology for use as appropriate for use with MTCA surface water cleanup equations for sites in LDW/Elliott Bay area.

~~6.3.3 The LDWG Baseline Human Health Risk Assessment and Tissue Data~~

~~Surface water and sediments associated with the Plant 2 site are contained within the LDW Site. Boeing is a signatory to the Lower Duwamish Waterway joint CERCLA/MTCA Administrative Order on Consent together with the City of Seattle, Port of Seattle, and King County. The CERCLA Order requires that the parties conduct a remedial investigation and feasibility study for the Lower Duwamish Waterway.~~

~~The Lower Duwamish Waterway baseline human health risk assessment (HHRA; Windward 2007) presents risk estimates for various scenarios whereby people could be exposed to chemicals of potential concern found in sediment and in fish and shellfish tissues from the Lower Duwamish Waterway. As part of this evaluation, extensive tissue and sediment sampling has been performed and evaluated. Chemical data for evaluating exposures from seafood consumption were available for English sole, starry flounder, crabs, clams, mussels, and perch caught within the Lower Duwamish Waterway; these are resident species that might occur adjacent to Plant 2, and in some cases have been caught off of Plant 2. Tissue analyses had an extensive analyte list inclusive of some chemicals found in Plant 2 groundwater.~~

~~In the Lower Duwamish Waterway Baseline HHRA, the highest excess cancer risks were associated with seafood consumption scenarios using Tribal seafood consumption rates. The primary cancer risk drivers were determined to be PCBs and arsenic. For non-cancer risks, arsenic and PCBs again were risk drivers with hazard quotients (HQs) in excess of one.~~

~~The HHRA indicated that elevated risks result primarily from exposures to a small number of chemicals. Approximately 85 to 90 percent of carcinogenic risks were associated with only three chemicals (i.e., arsenic, PCBs, and carginogenic PAHs). The overwhelming majority of the non-cancer hazards associated with seafood consumption were attributed to total PCBs (greater than 80 percent of the total developmental, neurological, and immunological hazard indices). The total PCB HQ for almost all seafood consumption scenarios exceeded one.~~

~~In Table 6.3, Column L indicates whether the specific PCOC was analyzed in tissue samples by the LDWG. The following columns compare the results of the LDWG HHRA risk assessment findings that are based on measured tissue data to the identification of COCs based on comparison of maximum shoreline concentrations with lowest, adjusted standards. The results also support the exclusion of BEHP as a COC. Metals, other than arsenic, were also not found to be risk drivers based on tissue data; and VOCs and TPH were not evaluated by LWDG.~~

~~The last two columns (Columns P and Q) in Table 6.3 list the proposed TMCLs for groundwater and the source of the selected value. The arsenic standard is based on background, the vinyl chloride on a promulgated standard, and the rest on tribally adjusted standards.~~

~~Six standards are for VOCs and are based on bioaccumulation of these constituents in seafood. Considerable scientific debate exists regarding whether these constituents bioaccumulate and~~

~~to what extent. As additional scientific information becomes available, Boeing and USEPA are committed to reviewing the basis for these TMCLs.~~

6.4 PROTECTION OF SEDIMENTS

~~Groundwater at Plant 2 discharges through the sediments in the DSOA. Cleanup of the DSOA is scheduled to occur in the next few years as discussed in Sections 1.0 and 2.0 of this report. It is important that groundwater discharge does not recontaminate the sediments after cleanup.~~

~~The DSOA/SWB cleanup consists of dredging contaminated sediments followed by backfilling with clean fill. PCBs will be below detection limits in the surface fill materials and all other constituents regulated under Washington's SMS (WAC 173-204) will be below their respective SQS. The long-term monitoring requirement under the DSOA corrective measure specifies that releases from Plant 2 may not recontaminate the sediments to concentrations above the SMS SQS.~~

~~The "DSOA and Southwest Bank Interim Measure Alternatives Evaluation" evaluated the potential for maximum concentrations in the Shoreline Monitoring Program to contaminate the clean fill materials placed in the DSOA/SWB during the interim measure, and found that existing concentrations are not sufficient to recontaminate sediments (AMEC and Floyd|Snider 2008). The question that is relevant in this TMCL Technical Memorandum is a slightly different one: are the TMCLs proposed in Table 6.3 protective of the sediment remedy, where protective means that the constituents partitioning onto the sediments from groundwater will not cause the sediments to exceed the SMS SQS in the future?~~

~~Backup calculations and further explanation about the modeling approach are included in Attachment H. Chemical attenuation modeling was conducted using an analytical model provided by the U.S. Army Corps of Engineers (USACE) and is described with modeling procedures in USACE's "Guidance for Subaqeous Dredged Material Capping" (Palermo et al. 1998). The Palermo Model was used to predict the groundwater concentrations discharging along the shoreline that would be protective of the sediments (i.e., that would not result in surface concentrations of the backfill/cap that exceed the SMS Lowest Apparent Effects Threshold [LAET] criteria, which are functionally equivalent to the SQS).~~

~~Input parameters reflective of site-specific conditions, such as partitioning coefficients representative of the future backfill/cap material, were used. The LAET values that correspond to the equivalent SMS SQS values set the target surface backfill/cap concentration for the model.~~

~~Using these site-specific input parameters in the Palermo Model for groundwater, TMCL concentrations protective of DSOA sediments could be calculated for all constituents except for silver. When the partition coefficient (Kd) or adsorption coefficient (Koc) values are extremely low, the constituent is not expected to adsorb onto solid particles and cannot be run in the model. In this case, the Kd for silver is so low that it will not partition to sediments.~~

~~The proposed TMCLs in Table 6.3 are evaluated in Attachment H using the same techniques that were used in the "DSOA and Southwest Bank Interim Measure Alternatives Evaluation" to~~

~~evaluate existing groundwater concentrations and are found to be protective of the sediment remedy (AMEC and Floyd|Snider 2008).~~

TMCLs for sediments in the LDW are intended to protect benthic and pelagic aquatic species using the waterway, and humans who may consume seafood from the waterway. See text in Section 5.1 TMCLs for Sediments, above.

Formatted: Font: Not Italic

Formatted

6.5 GROUNDWATER TMCLS FOR PROTECTION OF SURFACE WATER AND POINT OF COMPLIANCE

~~Table 6.4 summarizes the TMCLs for groundwater for the protection of surface water. It contains only those constituents detected during the Shoreline Monitoring Program that exceed TMCLs.~~ The Shoreline Monitoring Program is an ongoing program, and it is possible that future monitoring may result in the identification of additional of COCs or the elimination of others as interim measures on-site continue to reduce concentrations. The Area-specific volumes of the CMS will incorporate additional findings to identify the final COC list using the principles developed in this TMCL Technical Memorandum.

Two TMCLs (one for copper and one for arsenic) are listed as "background." ~~Attachment B~~Attachment A contains the USEPA-approved documentation concerning development and use of background levels at Plant 2. Background concentrations in groundwater for three metals (arsenic, copper, and manganese) were developed for Plant 2 and approved by USEPA.

The proposed point of compliance for groundwater for the protection of surface water is the Shoreline Monitoring Well Network. This existing network, which has been sampled since 2001, may be modified as part of the ongoing interim measure and CMS process at Plant 2.

~~Finally, the TMCLs presented in Table 6.4 do not include any attenuation between the groundwater monitoring wells and discharge into surface water; yet such attenuation has been shown to occur at Plant 2. Because the amount of attenuation depends on both chemical and location-specific physical properties, any consideration of attenuation will be addressed in the area-by-area volumes of the CMS Report, and will be incorporated as appropriate into the FMCLs.~~

7.0 Vapor Intrusion Considerations

7.1 INTRODUCTION

Volatile organics in soil and groundwater can volatilize into the soil pore space of unsaturated soil and then diffuse into buildings and open air. This process is commonly referred to as vapor intrusion. The available models for vapor intrusion are conservative and sufficiently quantitative for screening level work, but are not quantitative enough for use in compliance. For this reason, it is common to develop soil and groundwater concentrations, referred to as screening levels, that could indicate ambient or indoor air issues; and then use the screening levels to identify those areas on a site where additional lines of evidence are needed to assess risk and/or compliance.

This chapter will consider two potential exposure scenarios related to vapor intrusion: vapor intrusion into subsurface trenches during construction activities and vapor intrusion into buildings. These scenarios represent confined or partially confined spaces and are more conservative than diffusion into open, outdoor spaces.

When vapor intrusion models are used to back-calculate soil and groundwater screening levels that are protective of air exposures, it is necessary to first calculate acceptable air concentrations. Section 7.2 defines the acceptable air concentrations that will be used for various exposure,; Section 7.3 then discusses the calculation of groundwater screening levels for the trenching scenario, and Section 7.4 and Section 7.5 discuss vapor intrusion into buildings.

For vapor intrusion into buildings, the TMCL document does not discretely or collectively compare screening levels to site data, given the number of scenarios, settings, and datasets involved. The evaluation of vapor intrusion as a potential concern will be performed as part of the CMS process on an area-by-area basis, and reported in Volume ~~c~~ C for each area.

7.2 IDENTIFICATION OF AMBIENT AIR TARGET CONCENTRATIONS

7.2.1 Current Exposures: Industrial and Office Workers

For industrial and office workers, acceptable indoor air concentrations for volatile COCs and elemental mercury were calculated using MTCA Method C air cleanup level exposure assumptions to protect air quality, as described in WAC 173-340-750(4). These concentrations were calculated within the J&E Report and have been reviewed by USEPA (refer to ~~Attachment C~~Attachment B). In general, the equations used are the same basic equations as those used in USEPA's Risk Assessment Guidance for Superfund; however, MTCA Method C exposure assumptions are significantly more conservative than USEPA's. For example, MTCA Method C assumes 30 years, rather than 25 years, for industrial exposure and assumes that the industrial worker is exposed 24 hours a day for 365 days per year, rather than limiting exposure to a standard work week. The cumulative differences result in MTCA Method C levels being approximately seven times more conservative than the standard USEPA industrial scenario.

MTCA Method C indoor air screening levels were developed for all volatile COCs and elemental mercury at Plant 2 for which there was either inhalation cancer potency slope factors or reference doses available.

Table ~~7.1~~14 summarizes the parameters used to calculate the ambient air target concentrations for the various scenarios. The table also illustrates the effect of these parameters on the calculated concentrations for three representative VOCs: vinyl chloride, trichloroethene, and toluene.

7.2.2 Current Potential Exposure: Construction Worker Performing Trenching

For construction workers using a trenching scenario, the same equations were used but exposure was reduced to 2 work weeks per year. Table ~~7.1~~14 shows the exposure assumptions and, at the bottom of the table, compares the calculated concentrations for three representative VOCs to those for industrial workers at the facility.

7.2.3 Baseline Unrestricted Exposures: Residential

USEPA also directed preparation of an unrestricted use scenario based on residential exposures. For baseline residential exposures, standard MTCA Method B indoor air quality values were used as per WAC 173-340-750(3). This would represent an unrestricted site cleanup value. Table ~~7.1~~14 shows the exposure assumptions and, at the bottom of the table, compares the calculated concentrations for three representative VOCs to those for industrial/office and construction workers at the facility.

7.3 VAPOR INTRUSION INTO TRENCHES

In Section 4.1.4, a "trenching" construction scenario was considered as a possible exposure pathway from contaminated soil to a construction worker. This section uses the same overall exposure scenario but considers the pathway from volatile contaminants in groundwater through the soil column and into the trench. For groundwater, the trenching exposure considers groundwater as a source of contaminant vapor into the trench (i.e., inhalation) rather than direct contact with groundwater. Volatile organic compounds plus elemental mercury (as evaluated in vapor intrusion/J&E modeling) were evaluated for this inhalation. ~~Attachment F~~Attachment E presents further description and detailed calculations for this potential exposure.

The trenching scenario is used to back-calculate the maximum groundwater concentration (i.e., the screening level) that would result in air concentrations in the trench that are no greater than those calculated in Section 7.2.2 for construction workers. Table ~~7.2~~15 presents the calculated groundwater screening level for the trenching scenario. No groundwater concentration exceeds its screening level for the trenching scenario.

The groundwater screening levels were then compared to the maximum groundwater concentrations for each volatile constituent. This site-wide groundwater comparison was performed using the maximum concentration from all available, validated groundwater data collected across the site. However, the inclusion of historical data may not accurately indicate current conditions, as a number of interim measures have been performed over the years. For

example, the maximum TCE concentration of 570,000 µg/L was measured in a sample from Well PL2-021A in 2003. This location is inside the Building 2-66 Sheetpile Structure (an active IM) and the measure was taken prior to significant interim measures inside the sheetpile. Today, the TCE concentration in samples from PL2-021A has decreased to 2,700 µg/L. Accordingly, the evaluation of vapor intrusion as a potential concern will be performed as part of the CMS process on an area-by-area basis and reported in Volume ~~c~~ C for each area.

7.4 VAPOR INTRUSION INTO BUILDINGS

Vapor intrusion is the migration and diffusion of volatile chemicals from contaminated subsurface soil and groundwater up through the soil column and into overlying buildings. Volatile organic chemicals and elemental mercury in contaminated soils or groundwater can emit vapors, which may migrate through subsurface soils and enter the indoor air of overlying buildings. Vapor intrusion is often facilitated by building depressurization, which can cause these vapors to enter structures through seams and cracks in the foundation. Depressurization, or a pressure differential between the subsurface and the building interior, can be caused by a combination of wind effects, heating within the building, and/or mechanical ventilation. In extreme cases, vapors may enter structures through cracks and seams, and accumulate to levels that may pose near-term safety hazards, such as explosion for flammable vapors. More commonly, however, vapor concentrations exist at low concentrations to which long-term exposure may pose increased risk for chronic health effects.

7.4.1 The Johnson & Ettinger (J&E) Model

The Plant 2 indoor workers, as well as future indoor industrial and office workers, may be exposed to VOCs and/or elemental mercury in indoor air resulting from vapor intrusion.

To address this, the Johnson and Ettinger (J&E) Model is used to generate subsurface soil and groundwater screening levels protective of indoor air quality. The J&E Model evaluates the vapor intrusion pathway into buildings (Johnson and Ettinger 1991). Briefly, the model is a one-dimensional analytical tool that incorporates assumptions about both advection and diffusion transport mechanisms to produce a unitless “attenuation factor.” This attenuation factor is an estimate of how soil and building properties limit the intrusion of organic vapors into overlying buildings.

In general, the J&E Model output is affected by what acceptable indoor air concentrations are used as a target, the subsurface soil conditions in the modeled area, and the assumptions made about existing and/or future building construction. The model is highly dependent on the building assumptions used. These assumptions and caveats are discussed below.

Currently, there are three types of occupied buildings at Plant 2: high-ceiling, industrial space with significant air exchange, including the wind tunnel and manufacturing and storage areas of the 2-10 and 2-40s buildings; cubical office space in high-ceiling office buildings; and low-ceiling offices.

Generating soil and groundwater screening levels using the J&E Model was conducted in a two-step process:

- **Step 1:** Acceptable indoor air concentrations were calculated for two exposure scenarios as discussed in Section 7.1. Industrial indoor air values were used for current exposures; residential indoor air values were used in the next section to establish a baseline condition for unrestricted land use.
- **Step 2:** Calculation of soil and groundwater screening levels was conducted. J&E modeling applies an equation for estimating the migration of volatile organic vapors from shallow groundwater and soil through the soil column into a building through assumed cracks and seams in the floor or foundation, which then mix with indoor air. The J&E screening levels were derived by iteratively entering soil and groundwater concentrations into the J&E Model until the indoor air concentration value calculated by the model met the MTCA-acceptable indoor air concentration for each COC from Step 1. A more complete description of this work is provided in ~~Attachment C~~Attachment B (for industrial and commercial scenarios) and ~~Attachment D~~Attachment C (for residential settings).

Because of variability in geologic materials and contaminant concentrations across the site, groundwater and soil screening levels were developed for each of the following areas using the J&E modeling process discussed above:

- South Yard Area
- 2-60s Area
- Building 2-49/2-66 Area
- 2-40s Area
- 2-31 Area
- 2-10 Area/North Area

Importantly, ~~Attachment C~~Attachment B, the J&E report for industrial and commercial settings, was approved by USEPA on October 19, 2006 with the following stipulation from USEPA:

> "This report uses only theoretical, future commercial buildings in evaluating the vapor intrusion pathway. As Boeing is aware, it is not possible to accurately determine the additional contributions to the vapor intrusion pathway from the soil in areas where the soil is also contaminated; a condition that exists in several areas of the facility. As such, the values determined in this report are theoretical, and need to be validated prior to use. The empirical data needed to determine if the model results are protective predictions of indoor air from the subsurface should be collected before final groundwater and soil clean-up levels (CULs) are determined for this pathway."

7.4.2 Building Types in J&E Modeling

The J&E Model is highly dependent on assumptions about building configurations. For this reason, three types of buildings were considered at Plant 2, as follows:

- **Industrial Building.** This building type is the typical industrial building in use along the Duwamish Corridor. It contains a slab on grade foundation, with metal or slab (tilt-up) walls, and ceiling heights of greater than 20 feet.

- **USEPA draft default ~~commercial~~ building.** This building type is used to mimic office areas at Plant 2.
- **Residence.** A generic residential house of approximately 1,000 square feet with a slab on grade foundation.

More information about building types and dimensions can be found in ~~Attachment C~~Attachment B and ~~Attachment D~~Attachment C. In general, a key difference between the buildings is the ceiling height and room size—the smaller the room, the less opportunity for air flow and mixing to occur.

For comparative purposes, and considering the potential for future land use at Plant 2 changing to residential, a residential scenario, using default residential building assumptions and indoor air quality levels acceptable for residential exposures, was developed. However, unlike industrial and office worker indoor air, model values generated cannot be substantiated by quantitative indoor air monitoring or other empirical data, as there are no residential buildings on-site.

Attachments ~~C~~ Band ~~D~~ C detail the development of groundwater and soil screening levels for the protection of indoor air using the J&E screening levels. Consistent with the previous J&E modeling at Plant 2, the screening levels are developed area by area using area-specific soil criteria. Of note, although the bulk of ~~Attachment D~~Attachment C concerns the J&E residential calculations, new J&E screening values for the commercial and industrial soil and groundwater scenarios are presented in ~~Attachment D~~Attachment C for several analytes not previously modeled. Furthermore, following completion of the commercial and industrial evaluation included in ~~Attachment C~~Attachment B, the toxicity factor used in the calculation of MTCA cleanup levels for TCE was revised. Therefore, the commercial and industrial values for TCE were re-modeled and compared to the revised MTCA C air cleanup level. These new values are included in ~~Attachment D~~Attachment C.

7.5 SOIL AND GROUNDWATER SCREENING LEVELS FOR RESIDENCES

~~In general, soil and groundwater screening levels protective of indoor air quality for a residential exposure scenario are much lower than the screening levels calculated for commercial and industrial scenarios due in part to the difference in acceptable indoor air concentrations. For example, the MTCA Method B indoor air concentration for PCE is 0.42 µg/m^3, while the MTCA Method C concentration is 4.2 µg/m^3. The lowest model-calculated groundwater concentration protective of indoor air MTCA B concentrations for PCE is 3.54 µg/L, while the lowest model-calculated groundwater concentration protective of MTCA Method C indoor air concentrations is 343 µg/L.~~

~~A second major factor impacting the soil and groundwater screening levels in the residential exposure scenario are the building construction assumptions used in the model. Residential structures are typically much smaller buildings, with thinner foundations, and are typically more air tight than commercial and industrial buildings for energy efficiency, which then limits the amount of air exchange or "flushing" of indoor air with outdoor "fresh air" that occurs.~~

~~Since the importance of J&E modeling to develop soil and groundwater screening levels is to assess whether additional air monitoring is required, and since there are no residential buildings at Plant 2, the residential calculations may not be further evaluated at this time. However, residential scenario calculations and screening levels are presented in Attachment D. This scenario could be evaluated further should land use at Plant 2 change in a manner requiring unrestricted levels of protection, and thus provide actual circumstances for consideration.~~

Soil and groundwater screening levels predicted by modeling to be protective of unrestricted indoor air quality were calculated with the values and methodology presented in Attachment C.

Formatted: Left

8.0 Summary

8.1 SCOPE OF TARGET MEDIA CLEANUP LEVEL TECHNICAL MEMORANDUM

~~This Technical Memorandum presents TMCLs for soil, sediment, and groundwater at Plant 2. TCMLs are developed for all constituents detected in a media for which promulgated standards or established toxicity data are available. Maximum concentrations are then compared to the TMCLs to develop a list of COCs by area at Plant 2. The CMS will focus on identification of appropriate corrective measures in each area for the COCs in that area. Because additional investigation work is being performed at Plant 2 as part of the CMS, the COC list for an area will be updated in the future as additional data are collected during the CMS process~~.

~~8.2 DEVELOPMENT OF CONSTITUENTS OF CONCERN~~

~~Plant 2 COCs were identified in a three step process, as follows:~~

- ~~**Step 1: Identify PCOCs**. Any chemical that had been detected in soil, sediment, or groundwater was identified as a PCOC.~~
- ~~**Step 2: Develop TMCLs**. TMCLs were then developed for the PCOCs in each media. Section 4 presents the TMCLs for soil; Section 5.0 for sediments, and Section 6.0 for groundwater. Section 7.0 discusses screening levels for the vapor intrusion pathway.~~
- ~~**Step 3: Screen for COCs.** The maximum detected concentration of each PCOC was compared to its TMCL for each applicable media. If the measured concentration exceeded the TMCL, then the PCOC became a COC for that media.~~

~~Since the CMS Data Gaps Investigation process is still on-going at Plant 2, the identification of COCs will be revisited as needed during the CMS area-by-area reports.~~

~~8.3 DEVELOPMENT OF SOIL TMCLS~~

~~Soil TMCLs were developed for both unrestricted/residential and industrial land use scenarios at Plant 2. The direct contact scenarios included ingestion, dermal contact, and inhalation of dust for the following site users: industrial and office workers, residential users, and a construction worker performing short-term (2 week) subsurface trenching. The development also considered promulgated state standards as defined in Washington's Model Toxics Control Act and its regulations and guidance. Table 8.1 presents the soil TMCLs for the soil COCs. Additional soil TMCLs for PCOCs that did not become COCs are included in Section 4.0 tables.~~

~~Table 8.1 presents a summary of both residential and industrial TMCLs, indicates the basis of the TMCL, and areas containing residential and industrial TMCL exceedances for soils. Obviously, residential TMCLs are lower and therefore, more areas of the site contain residential TMCL exceedances and there are more site wide residential COCs. Industrial site wide COCs include several metals (arsenic, mercury, etc.); the volatiles vinyl chloride and trichloroethene; PAHs; TPHs and associated volatiles; and PCBs.~~

~~These soil TMCLs are intended to be applied throughout the site in the unsaturated zone, which is approximately the upper 12 feet of the site. This is the point of compliance for soils.~~

~~Vapor intrusion into buildings was not used to set a numeric soil TMCL, but is used to develop screening levels for vapor intrusion for use in the CMS process.~~

~~8.4 DEVELOPMENT OF SEDIMENT TMCLS~~

~~Sediment TMCLs for the protection of aquatic species are based on the promulgated standards that already exist for that pathway—Washington's Sediment Management Standards (Chapter 173-204 WAC). Sediment TMCLs for the protection of human health are in the process of being developed as part of the Lower Duwamish Superfund Site. Since the Plant 2 sediments are contained within the Superfund site, sediment TMCLs for the protection of human health at Plant 2 will be developed after the CERCLA process is complete, and will, as appropriate, rely on its findings.~~

~~Table 8.2 presents the sediment TMCLs for the sediment COCs. The complete list of SMS SQS are presented in Table 5.1. COCs for the sediment at Plant 2 include several metals, mostly high-molecular weight PAHs, PCBs, and three phthalates. PCBs have the highest single exceedance of the TMCLs, and have the most wide-spread occurrence across the Plant 2 sediments. PAHs and metals (except at the foot of the Southwest Bank) have only minor exceedances (generally less than three times the standard) and they are fairly localized.~~

~~8.5 DEVELOPMENT OF GROUNDWATER TMCLS~~

~~Groundwater TMCLs were developed for Plant 2 based on the maximum beneficial use of groundwater for surface water protection. Vapor intrusion during construction and into buildings is considered under vapor intrusion rather than under the development of groundwater TMCLs. Table 8.3 contains a summary of groundwater COCs and the proposed TMCLs for the two relevant groundwater exposure pathways: protection of aquatic species, and protection of human health through consumption of seafood. COCs for groundwater include dissolved metals such as cadmium, mercury, zinc, etc.; several volatiles such as vinyl chloride; two TPH-associated volatiles; and PCBs as well as the individual Aroclors (Aroclor 1254 and Aroclor 1260).~~

~~8.6 VAPOR INTRUSION CONSIDERATIONS~~

~~Vapor intrusion from contaminated groundwater and soils is discussed in Section 7.0. Site-wide groundwater concentrations are compared to screening levels developed for protection of trench workers. No site wide groundwater maximum concentrations exceed trench screening levels for groundwater. For vapor intrusion into buildings, three building types and exposures are considered: industrial, commercial, and residential buildings. The evaluation of vapor intrusion as a concern will be performed as part of the CMS process on an area-by-area basis.~~

~~8.7 USE OF TMCLS IN VOLUME C CMS REPORTS~~

This Technical Memorandum presents TMCLs for soil, sediment, and groundwater at Plant 2. TCMLs are developed for all constituents for which promulgated standards or established toxicity data are available. The CMS will focus on identification of appropriate corrective measures in each area for the COCs in that area. Because additional investigation work is being performed at Plant 2 as part of the CMS, the COC list for an area will be updated in the future as additional data are collected during the CMS process

Once approved TMCLs are available for use, the CMS can proceed with evaluation of potential corrective measures. The CMS will proceed area by area as separate volumes. ~~For example, Volume VI on the 2-40s Area would use soil and groundwater TMCLs to evaluate the need for corrective measures in the 2-40s Area. There are no sediments in the 2-40s Area, so the sediment TMCLs would not be used.~~ The TMCLs will also be used to evaluate the effectiveness of specific corrective measures and previously conducted interim measures.

The CMS discussion will address the issue of data representativeness when compared to TMCLs. For example, some of the groundwater data at Plant 2 are 20 years old and no longer represent current conditions; more recent data has been or are being collected for the entire site. Each section will discuss how historical and current data are used in identifying contamination and evaluating the appropriate corrective measure.

Vapor intrusion will also be considered area by area using the tools developed in this Technical Memorandum for vapor intrusion into buildings and trenches. The vapor intrusion analysis will identify those locations where additional information is needed to determine whether the conditions are already protective of human health or whether further corrective measures may be needed. This evaluation is also a part of the CMS area-by-area development.

Final target media cleanup levels (FMCLs) will be proposed as part of the CMS report. FMCLs may be developed for a constituent throughout an area or may be developed location-by-location based on some other factor.

9.0 References

AMEC and Floyd|Snider. 2008. *Duwamish Sediment Other Area and Southwest Bank Interim Measure Alternatives Evaluation.* Prepared for The Boeing Company. Seattle, Washington. 6 November.

Barrick R, S. Becker, L. Brown, H. Beller, and R. Pastorak. 1988. *Update and Evaluation of Puget Sound AET.* Prepared for USEPA.

City of Seattle. 2005. *City of Seattle Comprehensive Plan: Future Land Use Map*. Available online at http://www.seattle.gov/dpd/cms/groups/pan/@pan/@plan/@proj/documents/web_informational/dpdp_019479.pdf.

City of Tukwila. 2005. *City of Tukwila Comprehensive Plan Map. Land Use Designations*. Adopted by City Council, 4 December 1995. Available online at http://www.ci.tukwila.wa.us/dcd/compplan/COMPplanmap.pdf.

Duwamish Coalition 1998. *Duwamish Industrial Area Hydrogeologic Pathways Project, Duwamish Basin Groundwater Pathways Conceptual Model Report*. Prepared for City of Seattle Office of Economic Development and the King County Office of Budget and Strategic Planning. Prepared by Derek Booth and Lori Herman. April.

Floyd & Snider, Inc. (FSI) and Hart Crowser. 1998. *Duwamish Industrial Area Technical Memorandum: Shallow Groundwater Use Designation*. Prepared for The Duwamish Industrial Area Hydrogeologic Pathways Project. February.

Floyd|Snider. 2005. Memorandum to Will Ernst at The Boeing Company re: Summary of Recent Storm System Solids Survey and Source Control Sampling at Plant 2. Seattle, Washington. 4 November.

Floyd Snider McCarthy, Inc. (FSM). 2004. *Phase 1 Transformer PCB Investigation Report*. Prepared for The Boeing Company. Seattle, Washington. December.

Golder Associates, Inc. (Golder) and Floyd|Snider. 2006. *Draft Stormwater Source Control Work Plan for Boeing Plant 2, Seattle/Tukwila, Washington*. Prepared for The Boeing Company. Seattle, Washington. July.

Johnson, P.C., and R. Ettinger. 1991. "Heuristic Model for Predicting the Intrusion Rate of Contaminant Vapors into Buildings." *Environmental Science and Technology* 25(8): 1445–1452.

Lower Duwamish Work Group (LDWG). 2005. *Remedial Investigation Quality Assurance Project Plan: Porewater Sampling of Lower Duwamish Waterway, Appendix C.* May. Available online at: http://www.ldwg.org/assets/pw/app_c-voc_tox_data.pdf.

Palermo, M.R., J.E. Clausner, M.P. Rolling, G.L. Williams, T.E. Myers, T.J. Fredette, and R.E. Randall. 1998. *Guidance for Subaqueous Dredged Material Capping.* Washington, DC:

US Army Corps of Engineers, Waterways Experiment Station, Dredging Operations and Environmental Research Program, Technical Report DOER-1.

Pendowski, James. 2000. Letter to Ms. Stephanie Warden, Washington State Department of Ecology.

Sechena, R., Nakano, C., Liao, S. Polissar, N., Lorenzana, R., Truong, S. and Fenske, R. 1999. Asian and Pacific Islander Seafood Consumption Study. EPA 910/R-99-003. May.

Roy F. Weston, Inc. (Weston). 1998. *Corrective Measures Study Plan, Boeing – Plant 2, Seattle/Tukwila, Washington.* Prepared for The Boeing Company. September.

U.S. Environmental Protection Agency (USEPA). 1989. *Risk Assessment Guidance for Superfund, Volume I, Human Health Evaluation Manual (Part A) Interim Final.* USEPA Publication EPA/540/1-89/002. December.

_____. 2000. *Region X Supplemental Human Health Risk Assessment Guidance, Soil Ingestion Rates.* Office of Environmental Assessment. 25 January.

_____. 2005. *Human Health Risk Protocol for Hazardous Waste Combustion Facilities.* USEPA Publication EPA530-R-05-006. September.

_____. 2007. *Framework for Selecting and Using Tribal Fish and Shellfish Consumption Rates for Risk-Based Decision Making at CERCLA and RCRA Cleanup Sites in Puget Sound and the Strait of Georgia.* August.

_____. 2008. *Aroclor and Other PCB Mixtures, Plots of Aroclor CompositionI.* .PDF available online at http://epa.gov/osw/hazard/tsd/pcbs/pubs/aroclor.htm.

Windward. 2007. *Lower Duwamish Waterway Remedial Investigation Report. Appendix B: Baseline Human Health Risk Assessment, Final.* Prepared for the Lower Duwamish Waterway Group, USEPA, and Washington State Department of Ecology. 12 November.

Formatted: Normal, Indent: Left: 0", Hanging: 0.5", Don't adjust space between Latin and Asian text, Don't adjust space between Asian text and numbers

Table 1. TMCLs for Inorganic Chemicals in Soil at the Boeing Plant 2 Facility

	A	B	C	D	E	F	G	H	I	J	K	L	M	N	O	P	Q	R	S	T	U	V	W	X	Y	Z	AA	AB	AC	AD	AE	AF	AG
1						Modified [2]		R10 modified industrial																									
2				EPA	MTCA	MTCA	EPA	EPA RSL[3]	EPA RSL[3]	EPA RSL[3]	Total R10		Modified[4]																				
3				RSL	Method B	Method B	RSL	Ingestion 200	Industrial	Industrial	Modified	MTCA	MTCA	GI [5]	Dermal [5]												MTCA	Direct		Puget [12]			
4				Residential	Unrestricted	Unrestricted	Industrial	mg/d	Dermal	Inhalation	industrial	Method C	Method C	Absorption	Absorption												Soil → GW [9]	Contact [10]	SQS [11]	Sound			
5	CAS		K	1 E-06	Land Use 1 E-06	Land Use 1 E-06	1 E-06	1 E-05	1 E-05	1 E-05	EPA RSL[3] 1 E-05	1 E-05	1 E-05	Conversion	Factor	RfD_{oral}		RfD^{6}_{dermal}	RfC		$RfD^{7}_{inhalation}$	CSF_{oral}		CSF^{8}_{dermal}	H_{cc}	Kd	GW CUL	Cleanup	Soil CUL	(Dry Wt.)	Soil	SOIL	
6	Number	Chemical	E	HQ=1	HQ=1	HQ=1	HQ=1	HQ=1	HQ=1	HQ=1	HQ=1	Soil CUL	Soil CUL															Levels			Bkgd	TMCL	Basis
7			Y	(mg/kg)	(mg/kg)	(mg/kg)	(mg/kg)	(mg/kg)	(mg/kg)	(mg/kg)	(mg/kg)	(mg/kg)	(mg/kg)			(mg/kg-day)		(mg/kg-day)	(mg/m^3)		(mg/kg-day)	$(mg/kg\text{-}day)^{-1}$		$(mg/kg\text{-}day)^{-1}$	(unitless)	(L/kg)	(ug/L)	(mg/kg)	(mg/kg)	(mg/kg)	(mg/kg)	(mg/kg)	
8																																	
9	7440-36-0	Antimony (metallic)	NC	3.1E+01	3.2E+01	2.9E+01	4.1E+02	2.0E+02	-	-	2.0E+02	1.4E+03	5.3E+02	0.2	0.01	4.0E-04	I	8.0E-05	-		-				0.0E+00	4.5E+01	3.9E+00	3.5E+00	2.9E+01		-	3.5E+00	MTCA 3-phase Partitioning Model
10	7440-38-2	Arsenic (inorganic)	C	3.9E-01	6.7E-01	6.0E-01	1.6E+00	9.5E+00	9.6E+00	3.9E+03	4.8E+00	8.8E+01	3.3E+01	0.2	0.01	3.0E-04		6.0E-05	1.5E-05	Cal	4.3E-06	1.5E+00	I	7.5E+00	0.0E+00	2.9E+01	8.0E+00	4.7E+00	3.9E-01		7.3E+00	7.3E+00	Puget Sound background
11	7440-39-3	Barium	NC	1.5E+04	1.6E+04	1.4E+04	1.9E+05	1.0E+05		3.0E+06	9.9E+04	7.0E+05	2.7E+05	0.2	0.01	2.0E-01	I	4.0E-02	-		-				0.0E+00	4.1E+01	1.2E+02	1.0E+02	1.4E+04		-	1.0E+02	MTCA 3-phase Partitioning Model
12	7440-41-7	Beryllium	NC	1.6E+02	1.6E+02	1.4E+02	2.0E+03	1.0E+03	-	1.2E+05	1.0E+03	7.0E+03	2.7E+03	0.2	0.01	2.0E-03	I	4.0E-04	-		-				0.0E+00	7.9E+02	1.2E+01	2.0E+02	1.4E+02		6.1E-01	1.4E+02	Direct contact
13	7440-43-9	Cadmium	NC	7.0E+01	8.0E+01	7.2E+01	8.0E+02	5.1E+02	3.9E+03	6.0E+04	4.5E+02	3.5E+03	1.3E+03	0.2	0.01	1.0E-03	I	2.0E-04	-		-				0.0E+00	6.7E+00	2.1E-01	2.9E-02	7.0E+01	5.1E+00	7.7E-01	7.7E-01	Puget Sound background
14	18540-29-9	Chromium (VI)	C	2.9E-01	2.0E+00	1.5E+00	5.6E+00	2.9E+01	-	-	2.9E+01	2.6E+02	1.0E+02	0.2	0.01	3.0E-03	I	6.0E-04	1.0E-04	I	2.9E-05	5.0E-01	J	2.5E+00	0.0E+00	1.9E+01	5.8E-01	2.2E-01	2.9E-01	2.6E+02	4.9E+01	2.2E-01	MTCA 3-phase Partitioning Model [13]
15	7440-50-8	Copper	NC	3.1E+03	3.2E+03	2.9E+03	4.1E+04	2.0E+04	-	-	2.0E+04	1.3E+05	5.3E+04	0.2	0.01	4.0E-02	H	8.0E-03	-		-				0.0E+00	2.2E+01	8.0E+00	3.6E+00	2.9E+03	3.9E+02	3.6E+01	3.6E+01	Puget Sound background
16	57-12-5	Cyanide (free)	NC	1.6E+03	1.6E+03	1.4E+03	2.0E+04	1.0E+04	-	-	1.0E+04	7.0E+04	2.7E+04	0.2	0.01	2.0E-02	I	4.0E-03	-		-				0.0E+00	9.9E+00	1.0E+00	2.0E-01	1.4E+03		-	2.0E-01	MTCA 3-phase Partitioning Model
17	74-90-8	Cyanide (hydrogen)	NC	1.9E+01	1.6E+03	1.4E+03	8.0E+01	1.0E+04		8.0E+01	7.9E+01	7.0E+04	2.7E+04	0.2	0.01	2.0E-02	I	4.0E-03	-		-				0.0E+00	9.9E+00	2.4E+03	4.8E+02	1.9E+01			1.9E+01	Direct contact
18	7439-92-1	Lead	NC	4.0E+02	2.5E+02 [1]	-	8.0E+02	-	-	-	-	1.0E+03 [1]	-	0.2	0.01	-	-	-	-		-				0.0E+00	1.0E+04	2.5E+00	5.0E+02	2.5E+02	4.9E+02	1.7E+01	2.5E+02	Direct contact
19	7439-96-5	Manganese (non-diet)	NC	1.8E+03	1.9E+03	1.7E+03	2.3E+04	1.2E+04	-	3.0E+05	1.2E+04	4.9E+05	3.2E+04	0.2	0.01	2.4E-02	I	4.8E-03	5.0E-05						0.0E+00	6.5E+01	2.0E+03	2.6E+03	1.7E+03		1.1E+03	1.7E+03	Direct contact
20	22967-92-6	Mercury (methyl mercury)	NC	7.8E+00	8.0E+00	7.2E+00	1.0E+02	5.1E+01			5.1E+01	3.5E+02	1.3E+02	0.2	0.01	1.0E-04	I	2.0E-05	-		-				0.0E+00	0.0E+00	4.5E-04	1.8E-06	7.2E+00	4.1E-01	-	1.8E-06	MTCA 3-phase Partitioning Model
21	7439-97-6	Mercury (elemental)	NC	5.6E+00	1.3E+01		3.4E+01	8.2E+01	-	4.3E+01	2.8E+01	1.1E+03	2.1E+02	0.2	0.01	1.6E-04	Cal	3.2E-05	3.0E-04	I	8.6E-05				4.7E-01	5.2E+01	1.2E-02	1.3E-02	5.6E+00		7.0E-02	7.0E-02	Puget Sound background
22	7440-02-0	Nickel (soluble salts)	NC	1.5E+03	1.6E+03	1.4E+03	2.0E+04	1.0E+04	-	5.4E+05	1.0E+04	7.0E+04	2.7E+04	0.2	0.01	2.0E-02	I	4.0E-03	-		-				0.0E+00	6.5E+01	8.2E+00	1.1E+01	1.4E+03		3.8E+01	3.8E+01	Puget Sound background
23	7782-49-2	Selenium	NC	3.9E+02	4.0E+02	3.6E+02	5.1E+03	2.6E+03		1.2E+08	2.6E+03	1.8E+04	6.7E+03	0.2	0.01	5.0E-03	I	1.0E-03	-		-				0.0E+00	5.0E+00	5.0E+00	5.2E-01	3.6E+02		-	5.2E-01	MTCA 3-phase Partitioning Model
24	7440-22-4	Silver	NC	3.9E+02	4.0E+02	3.6E+02	5.1E+03	2.6E+03	-	-	2.6E+03	1.8E+04	6.7E+03	0.2	0.01	5.0E-03	I	1.0E-03	-		-				0.0E+00	8.3E+00	2.2E+01	3.7E+00	3.6E+02	6.1E+00	-	3.7E+00	MTCA 3-phase Partitioning Model
25	7440-28-0	Thallium		-	-	-	-	-	-	-	-	-	-	-	-	-	-	-	-		-	-	-	-	0.0E+00	7.1E+01	4.7E-01	-	-	-	-	-	No current toxicity values
26	7440-62-2	Vanadium (metallic)	NC	5.5E+00	5.6E+00	5.0E+00	7.2E+01	3.6E+01	-	-	3.6E+01	2.5E+04	9.3E+01	0.2	0.01	7.0E-05	I	1.4E-05	-		-				0.0E+00	1.0E+03	2.6E+02	5.2E+03	5.0E+00		-	5.0E+00	Direct contact
27	7440-66-6	Zinc (metallic)	NC	2.3E+04	2.4E+04	2.2E+04	3.1E+05	1.5E+05	-	-	1.5E+05	1.1E+06	4.0E+05	0.2	0.01	3.0E-01	I	6.0E-02	-		-				0.0E+00	6.2E+01	5.6E+01	7.0E+01	2.2E+04	4.1E+02	8.5E+01	8.5E+01	Puget Sound background

28

29 [1] MTCA Method A values used for lead as no MTCA B or C values are available.

30 [2] Modified MTCA B includes dermal exposure [WAC 173-340-740; Equations 740-4 & 740-5].

31 [3] EPA Industrial RSL Levels were adjusted for a soil ingestion rates of 200 mg/day based on Region 10 Supplemental Human Health Risk Assessment Guidance on Soil Ingestion Rates (January 25, 2000).

32 Cancer-based screening levels were adjusted to a risk of 1E-5 which is the standard R10 RCRA corrective action level for industrial exposures.

33 [4] Modified MTCA Method C includes dermal exposure [WAC 173-340-745; Equations 745-4 & 745-5].

34 [5] Default Values from MTCA Cleanup Regulation WAC 173-340

35 [6] Dermal RfD derived by multiplying oral RfD by GI conversion factor

36 [7] Derived using this formula: RfDi mg/(kg-day) = RfC (mg/m^3) x $20m^3$/day x 1/70kg

37 [8] Dermal SF derived by dividing oral SF by GI conversion factor

38 [9] Soil to Groundwater Cleanup values are based on the MTCA fixed parameter three-phase partitioning model [WAC 173-340-747; Equation 747-1].

39 [10] Direct Contact based on lowest concentrations in columns D through M.

40 [11] SQS = Sediment Quality Standards Chemical Criteria (dry weight) [WAC-173-204-320(a)]

41 [12] Table 7, Puget Sound Soil Background Values from Ecology State-wide Natural Background for Metals in Soil (October 1994)

42 [13] Background value is for total chromium, not chromium (VI). Hexavalent chromium is not corrected for background.

43 C = cancer; NC = noncancer; blank cell (-) =no data available; I = IRIS H = HEAST;J= New Jersey Dept. of Environmental Protection; Cal = CalEPA; Kd= soil water partition coefficient; Hcc= Henry's Law Constant, unitless;RfD = Reference Dose; RfC = Reference Concentration; CSF = Cancer Slope Factor;

44 Reference: Health Effects Assessment Summary Tables (HEAST), EPA 1994.

45 H_{cc} values from WAC 173-340-747(4)(d); Kd values from WAC 173-340 Table 747-3 or EPA's Soil Screening Guidance Technical Background Document, Table 46 or 43.

46

Table 2. TMCLs for Inorganic Chemicals in Groundwater at the Boeing Plant 2 Facility

	A	B	C	D	E	F	G	H	I	J	K	L	M	N	O	P	Q	R	S	T	U	V	W	X	Y	Z	AA	AB	AC	AD	AE	AF
1					NTR [4]	NTR [5]	NTR [6]	WAC 173-201 A [7]		EPA AWQCs [8]				SW CUL [10]		SW CUL [10]		SW CUL [11]		SW CUL [11]			MTCA B [12]									
2														w/	w/	w/o	w/o	w/	w/	w/o	w/o		Adjusted									
3				NOAA[3]	FW	Marine	HH	FW	Marine	FW	Marine			salmon	salmon	salmon	salmon	salmon	salmon	salmon	salmon	MTCA B									GW [15]	
4	CAS			FW SW	chronic	chronic	Criteria	chronic	chronic	chronic	chronic	HH Criteria		Fish	Fish	Fish	Fish	Fish	Fish	Fish	Fish	Fish	Fish		Tap [13]	LDWG [14]					TMCL	
5	Number	Chemical	K	Screening	Criteria	Criteria	Organism	Criteria	Criteria	Criteria	Criteria	Organism		Ingestion	Ingestion	Ingestion	Ingestion	Ingestion	Ingestion	Ingestion	Ingestion	Ingestion	Ingestion		Water	GW						
6			E	Criteria	Eco	Eco	only	Eco	Eco	Eco	Eco	only	BCF [9]	Tribal adult	Tribal Child	Tribal Adult	Tribal Child	API adult	API Child	API adult	API Child	SW CUL	SW CUL	MCL		Bkgd	RfD_{oral}	Source	CSF_{oral}	Source		Basis
7			Y	(ug/L)	(ug/L)	(ug/L)	(ug/L)	(ug/L)	(ug/L)	(ug/L)	(ug/L)	(ug/L)	L/kg	(ug/L)	(ug/L)	(ug/L)	(ug/L)	(ug/L)	(ug/L)	(ug/L)	(ug/L)	(ug/L)	(ug/L)	(ug/L)	(ug/L)	(ug/L)	(mg/kg-d)		$(mg/kg\text{-}d)^{-1}$		(ug/L)	
8	7440-36-0	Antimony (metallic)	NC	-				-	-	-	-	6.4E+02	4.0E+01	4.2E+00	1.9E+00	8.4E+00	3.9E+00	1.1E+01	6.5E+00	1.1E+01	6.5E+00	2.6E+01	1.1E+01	6.0E+00	1.5E+01	-	4.0E-04	I			3.9E+00	Tribal Child
9	7440-38-2	Arsenic(inorganic)	C	-	1.9E+02	3.6E+01	1.4E-01	1.9E+02	3.6E+01	1.5E+02	3.6E+01	1.4E-01	1.1E+02	2.7E-03	1.3E-02	5.4E-03	2.6E-02	1.9E-02	4.4E-02	1.9E-02	4.4E-02	3.8E-02	1.6E-02	1.0E+01	4.5E-02	8.0E+00	3.0E-04	I	1.5E+00	I	8.0E+00	Bkgd conc in gw as per EPA Approval of Tech memo on bkgd of December 2008.
10	7440-39-3	Barium	NC	-	-	-	-	-	-	-	-	-	6.3E+02	1.3E+02	6.1E+01	2.7E+02	1.2E+02	3.5E+02	2.1E+02	3.5E+02	2.1E+02	8.2E+02	3.5E+02	2.0E+03	7.3E+03	-	2.0E-01	I			1.2E+02	Tribal Child
11	7440-41-7	Beryllium	NC	-	-	-	-	-	-	-	-	-	6.2E+01	1.4E+01	6.2E+00	2.7E+01	1.2E+01	3.5E+01	2.1E+01	3.6E+01	2.1E+01	8.4E+01	3.6E+01	4.0E+00	7.3E+01	-	2.0E-03	I			1.2E+01	Tribal Child
12	7440-43-9	Cadmium	NC	-	1.0E+00	9.3E+00	-	-	9.3E+00	2.5E-01	8.8E+00	-	9.1E+02	4.6E-01	2.1E-01	9.3E-01	4.3E-01	1.2E+00	7.2E-01	1.2E+00	7.2E-01	2.9E+00	1.2E+00	5.0E+00	1.8E+01	-	1.0E-03	I			2.1E-01	Tribal Child
13	18540-29-9	Chromium (VI)	C	-	1.0E+01	5.0E+01	-	1.0E+01	5.0E+01	1.1E+01	5.0E+01	-	3.2E+00	2.9E-01	1.4E+00	5.8E-01	2.8E+00	2.0E+00	4.8E+00	2.0E+00	4.8E+00	4.1E+00	1.7E+00		4.3E-02	-	3.0E-03	I	5.0E-01	J	5.8E-01	Tribal Adult
14	7440-50-8	Copper	NC	-	1.1E+01	2.4E+00	-	-	3.1E+00	-	3.1E+00	-	3.6E+01	4.7E+02	2.1E+02	9.4E+02	4.3E+02	1.2E+03	7.2E+02	1.2E+03	7.2E+02	2.9E+03	1.2E+03	1.3E+03	1.5E+03	8.0E+00	4.0E-02	H			8.0E+00	Bkgd conc in gw as per EPA Approval of Tech memo on bkgd of December 2008.
15	57-12-5	Cyanide (free)	NC	-	5.2E+00	1.0E+00	2.2E+05	5.2E+00	-	5.2E+00	1.0E+00	1.4E+02	3.2E+00	2.7E+03	1.2E+03	5.3E+03	2.4E+03	7.0E+03	4.1E+03	7.0E+03	4.1E+03	1.6E+04	7.0E+03	2.0E+02	7.3E+02	-	2.0E-02	I			1.0E+00	EPA marine chronic aquatic eco criterion
16	74-90-8	Cyanide(hydrogen)	NC	-	-	-	-	-	-				3.2E+00	2.7E+03	1.2E+03	5.3E+03	2.4E+03	7.0E+03	4.1E+03	7.0E+03	4.1E+03	1.6E+04	7.0E+03	-	6.2E+00	-	2.0E-02	I			2.4E+03	Tribal Child
17	7439-92-1	Lead	NC	-	2.5E+00	8.1E+00	-	-	8.1E+00	2.5E+00	8.1E+00	-	9.00E-02	-	-	-	-	-	-	-	-	-	-	1.5E+01	-	-					2.5E+00	EPA freshwater chronic aquatic eco criterion.
18	7439-96-5	Manganese	NC	-	-	-	-	-	-	-	-	1.0E+02	-	-	-	-	-	-	-	-	-	-	-	-	8.8E+02	2.0E+03	1.4E-01	I			2.0E+03	Bkgd conc in gw as per EPA Approval of Tech memo on bkgd of December 2008.
19	22967-92-6	Mercury (methyl) [1,2]	NC	-	-	-	-	-	-	-	-	-	8.5E+04	5.0E-04	2.3E-04	9.9E-04	4.5E-04	1.3E-03	7.7E-04	1.3E-03	7.7E-04	3.1E-03	1.3E-03	-	3.7E+00	-	1.0E-04	I			4.5E-04	Tribal Child
20	7439-97-6	Mercury (elemental) [1]	NC	-	1.2E-02	2.5E-02	-	1.2E-02	2.5E-02	7.7E-01	9.4E-01	-	5.0E+03	1.3E-02	6.2E-03	2.7E-02	1.2E-02	3.5E-02	2.1E-02	3.5E-02	2.1E-02	8.3E-02	3.5E-02	2.0E+00	5.7E-01	-	1.6E-04	Cal			1.2E-02	Tribal Child
21	7440-02-0	Nickel	NC	-	1.6E+02	8.2E+00	-	-	8.2E+00	5.2E+01	8.2E+00	4.6E+03	7.8E+01	1.1E+02	5.0E+01	2.2E+02	9.9E+01	2.8E+02	1.7E+02	2.8E+02	1.7E+02	6.6E+02	2.8E+02		7.3E+02	-	2.0E-02	I			8.2E+00	EPA marine chronic aquatic eco criterion
22	7782-49-2	Selenium	NC	-	-	-	-	5.0E+00	7.1E+01	5.0E+00	7.1E+01	4.2E+03	1.3E+02	1.6E+01	7.5E+00	3.3E+01	1.5E+01	4.3E+01	2.5E+01	4.3E+01	2.5E+01	1.0E+02	4.3E+01	5.0E+01	1.8E+02	-	5.0E-03	I			5.0E+00	EPA Freshwater Chronic Aquatic criterion.
23	7440-22-4	Silver	NC	-	-	-	-	-	-	-	-	-	8.8E+01	2.4E+01	1.1E+01	4.8E+01	2.2E+01	6.2E+01	3.7E+01	6.3E+01	3.7E+01	1.5E+02	6.3E+01	-	1.8E+02	-	5.0E-03	I			2.2E+01	Tribal Child
24	7440-28-0	Thallium	-	-	-	-	-	-	-	-	-	4.7E-01	1.0E+04	-	-	-	-	-	-	-	-	-	-	2.0E+00	-		-	I			4.7E-01	EPA AWQC human health criterion (organism only)
25	7440-62-2	Vanadium (metallic)	NC	1.9E+01	-	-	-	-	-	-	-	-	-	-	-	-	-	-	-	-	-	-	-	-	2.6E+00	2.6E+02	7.0E-05	I			2.6E+02	LDWG Bkgd conc in groundwater
26	7440-66-6	Zinc (metallic)	NC	-	1.0E+02	8.1E+01	-	-	8.1E+01	1.2E+02	8.1E+01	2.6E+04	2.1E+03	6.1E+01	2.8E+01	1.2E+02	5.6E+01	1.6E+02	9.5E+01	1.6E+02	9.5E+01	3.8E+02	1.6E+02	-	1.1E+04	-	3.0E-01	I			5.6E+01	Tribal Child
27																																
28	[1] Mercury BCFs are from (Sorensen et al., 1990),																															
29	[2] Federal surface water human health criterion for ingestion of organisms is based on residual concentration of methylmercury of 0.3 mg/kg in organism. There is no federal criterion based on surface water concentration.																															
30	Fish tissue residue criterion is based on total fish consumption rate of 0.0175 kg/day (EPA AWQC, 2009)																															
31	[3] From NOAA Quick Reference Screening Tables (2008) [By M.F. Buchman]																															
32	[4] Fresh water chronic aquatic life – National Toxics Rule, 40 CFR 131.36																															
33	[5] Marine chronic aquatic life – National Toxics Rule, 40 CFR 131.36																															
34	[6] Human Health – National Toxics Rule, 40 CFR 131.36																															
35	[7] Surface water criteria WAC 173-201 A																															
36	[8] EPA Ambient Water Quality Criteria (AWQC), Clean Water Act section 304																															
37	[9] Meylan, et al. (1999). In EPA Human Health Risk Assessment Protocol for Hazardous Waste Combustion Facilities (HHRAP) Guidance (2005). EPA520-R-05-006.																															
38	[10] Standard MTCA Method B Surface Water Cleanup Levels Equations modified by applying Tribal (adult & child) fish ingestion rates, body weights and exposure duration																															
39	[11] Standard MTCA Method B Surface Water Cleanup Levels Equations modified by applying Asian & Pacific Islanders (API) fish ingestion rates and body weights																															
40	[12] Based on MTCA Method B and Equations 730 -1 & 730-2 but modified to include Asian & Pacific Islander adult fish Ingestion rate and body weight and a fish diet fraction of 1																															
41	[13] Tap Water Values from EPA RSL (May 2010).																															
42	[14] LDWG = Lower Duwamish Waterway Group																															
43	[15] Where groundwater cleanup level based on fish ingestion, it is w/o salmon because salmon is not considered a resident fish in the Duwamish River in the vicinity of the Boeing Plant 2 Facility.																															
44	Blank Cell (-) = no data available																															
45	C = cancer; NC = noncancer; I = IRIS H = HEAST;J= New Jersey Dept. of Environmental Protection; C = CalEPA; RfD = Reference Dose; CSF = Cancer Slope Factor; FW = Freshwater																															
46	**References:**																															
47	EPA Health Effects Assessment Summary Tables (HEAST), EPA 1994.:																															
48	Sorensen, J.A., G.E. Glass, K.W. Schmidt, J.K. Huber and G.R. Rapp, Jr. (1990). Airborne mercury deposition and watershed characteristics in relation to mercury concentrations in water, sediments, plankton, and fish of eighty northern Minnesota lakes.																															
49	*Environ. Sci. Technol.* 24:1716-1727.																															

Table 3. TMCLs for Semivolatile Organic Chemicals (minus mutagenic, carcinogenic PAHs) in Soil at the Boeing Plant 2 Facility

	A	B	C	D	E	F	G	H	I	J	K	L	M	N	O	P	Q	R	S	T	U	V	W	X	Y	Z	AA	AB	AC	AD	AE	AF	AG	AH	AI	AJ	AK	AL	AM	AN	AO	AP	AQ	AR	AS	AT	AU
1											Ingestion	Ingestion	Dermal	Dermal	Inhalation	Inhalation																																
2			EPA	EPA	MTCA	MTCA	Modified [2]	Modified [2]	EPA	EPA	R-10 [3]	R-10 [3]	EPA	EPA	EPA	EPA	Total	Total	MTCA	MTCA	Modified [2]	Modified [2]																										
3			Regional	Regional	Unrestricted	Unrestricted	MTCA	MTCA	Regional	Regional	Modified	Modified	Regional	Regional	Regional	Regional	R-10	R-10	Method C	Method C	MTCA	MTCA																										
4			Screening	Screening	Land Use	Land Use	Method B	Method B	Screening	Screening	Screening	Screening	Screening	Screening	Screening	Screening	Modified	Modified	Industrial	Industrial	Method C	Method C																										
5	CAS		Levels	Levels	Ingestion only	Ingestion only	Unrestricted	Unrestricted	Levels	Levels	Levels	Levels	Level	Level	Level	Level	Screening	Screening	1 E-05	1 E-05	Industrial	Industrial	GI	Dermal																								
6	Number	Chemical	Residential	Residential	1 E-06	HQ=1	1 E-06	HQ=1	Industrial	Industrial	Industrial	Industrial	Industrial	Industrial	Industrial	Industrial	Industrial	Industrial	Soil CUL	Soil CUL	Soil CUL	Soil CUL	Absorption	Absorption	RfD_{oral}		RfD_{dermal} [4]	$RfD_{inhalation}$ [5]				CSF_{oral}		CSF_{dermal}	Inhalation	$CSF_{inhalation}$		H_{cc}	K_{oc}	F_{oc}	K_d	Direct [6] Contact Cleanup	GW CUL From	SQS [7] Organic	MTCA [8] Soil → GW	Soil	
7			1 E-06	HQ=1.0	Ingestion only	HQ=1	Unrestricted	HQ=1	1 E-06	HQ=1.0	1 E-05	HQ=1.0	1 E-05	HQ=1.0	1 E-05	HQ=1.0	1 E-05	HQ=1.0	mg/kg	HQ=1	Cancer	HQ=1	Conversion	Dermal	mg/kg-day		mg/kg-day	mg/kg-day				mg/kg-day		mg/kg-day	Unit Risk	mg/kg-day		(unitless)	(ml/g)	(g/g)	(L/kg)	Level	Table 6	Carbon	Cleanup Level	TMCL	Basis
8			(mg/kg)	(mg/kg)	1 E-06	(mg/kg)	1 E-06	(mg/kg)	(mg/kg)	(mg/kg)	(mg/kg)	(mg/kg)	(mg/kg)	(mg/kg)	(mg/kg)	(mg/kg)	1 E-05	(mg/kg)	mg/kg	(mg/kg)	mg/kg	mg/kg	Factor [4]	Factor [4]											(ug/m3) [-1]	(mg/kg-day) [-1]						(mg/kg)	(ug/L)	(mg/kg)	(mg/kg)	(mg/kg)	
11		**SVOCs**	Cancer	Noncancer	Cancer	Noncancer	Cancer	Noncancer	Cancer	Noncancer	Cancer	Noncancer	Cancer	Noncancer	Cancer	Noncancer	Cancer	Noncancer	Cancer	Noncancer	Cancer	Noncancer																										
12	83-32-9	Acenaphthene	-	3.4E+03	-	4.8E+03	-	3.3E+03	-	3.3E+04	-	3.1E+04	-	7.1E+04	-	-	-	2.1E+04	-	2.1E+05	-	4.0E+04	0.5	0.100	6.0E-02	I	3.0E-02	-	-	-	-	-	-	-	-	-	-	6.4E-03	5027	1.0E-03	5.0E+00	3.3E+03	1.2E+02	1.6E+01	1.2E+01	1.2E+01	MTCA 3-phase Partitioning Model
13	208-96-8	Acenaphthylene	-	-	-	-	-	-	-	-	-	-	-	-	-	-	-	-	-	-	-	-	-	-	-	-	-	-	-	-	-	-	-	-	-	-	-	4.5E-03	2.8E+03	1.0E-03	2.8E+00	-	-	6.6E+01	-	6.6E+01	WA Sediment Quality Standards
14	120-12-7	Anthracene	-	1.7E+04	-	2.4E+04	-	1.7E+04	-	1.7E+05	-	1.5E+05	-	3.6E+05	-	-	-	1.1E+05	-	1.1E+06	-	2.0E+05	0.5	0.100	3.0E-01	I	1.5E-01	-	-	-	-	-	-	-	-	-	-	2.7E-03	16360	1.0E-03	1.6E+01	1.7E+04	2.0E+02	2.2E+02	6.6E+01	6.6E+01	MTCA 3-phase Partitioning Model
15	111-44-4	Bis(2-chloroethyl) ether	2.1E-01	-	9.1E-01	-	6.3E-01	-	1.0E+00	-	1.3E+01	-	-	-	1.7E+01	-	7.4E+00	-	1.2E+02	-	2.3E+01	-	0.5	0.100	-	-	-	-	-	-	-	1.1E+00	I	2.2E+00	-	-	-	7.4E-04	32.21	1.0E-03	3.2E-02	2.1E-01	4.3E-01	-	2.0E-03	2.0E-03	MTCA 3-phase Partitioning Model
16	117-81-7	Bis(2-ethylhexyl)phthalate	3.5E+01	-	7.1E+01	-	5.0E+01	-	1.2E+02	1.2E+04	1.0E+03	1.0E+04	3.1E+03	3.1E+04	6.9E+07	-	7.7E+02	7.7E+03	9.4E+03	-	1.8E+03	-	0.5	0.100	2.0E-02	I	1.0E-02	-	-	-	-	1.4E-02	I	2.8E-02	-	-	-	4.2E-06	119600	1.0E-03	1.2E+02	3.5E+01	1.2E+00	4.7E+01	2.9E+00	2.9E+00	MTCA 3-phase Partitioning Model
17	75-25-2	Bromoform	6.1E+01	1.2E+03	1.3E+02	-	8.8E+01	-	2.2E+02	-	1.8E+03	-	5.5E+03	3.1E+04	1.5E+08	-	1.4E+03	-	1.7E+04	-	3.2E+03	-	0.5	0.03	2.0E-02	I	1.0E-02	-	-	-	-	7.9E-03	I	1.6E-02	-	-	-	2.2E-02	31.82	1.0E-03	3.2E-02	6.1E+01	8.8E+00	-	4.1E-02	4.1E-02	MTCA 3-phase Partitioning Model
18	85-68-7	Butylbenzyl phthalate	2.6E+02	-	5.3E+02	-	3.7E+02	-	5.7E+02	-	7.5E+03	-	2.3E+04	3.1E+05	-	-	5.7E+03	-	7.0E+05	-	1.3E+04	-	0.5	0.100	2.0E-01	I	1.0E-01	-	-	-	-	1.9E-03	P	3.8E-03	-	-	-	5.2E-05	7155	1.0E-03	7.2E+00	2.6E+02	4.1E-01	4.9E+00	6.0E-02	6.0E-02	MTCA 3-phase Partitioning Model
19	86-74-8	Carbazole	-	-	-	-	-	-	-	-	-	-	-	-	-	-	-	-	-	-	-	-	-	-	-	-	-	-	-	-	-	-	-	-	-	-	-	-	-	-	-	-	-	-	-	-	-	
20	59-50-7	4-chloro-3-methylphenol (p-chloro-m -cresol)	-	6.1E+03	-	8.0E+03	-	5.6E+03	-	6.2E+04	-	5.1E+04	-	1.5E+05	-	-	-	3.8E+04	-	3.5E+05	-	6.7E+04	0.5	0.100	1.0E-01	X	5.0E-02	-	-	-	-	-	-	-	-	-	-	1.0E-04	491.8	1.0E-03	4.9E-01	5.6E+03	-	-	-	5.6E+03	Modified MTCA B Unrestricted
21	132-64-9	Dibenzofuran	-	-	-	-	-	-	-	-	-	-	-	-	-	-	-	-	-	-	-	-	0.5	0.100	-	-	-	-	-	-	-	-	-	-	-	-	-	-	9161	1.0E-03	9.2E+00	-	-	1.5E+01	-	1.5E+01	WA Sediment Quality Standards
22	84-74-2	Dibutyl Phthalate	-	6.1E+03	-	8.0E+03	-	5.6E+03	-	6.2E+04	-	5.1E+04	-	1.5E+05	-	-	-	3.8E+04	-	3.5E+05	-	6.7E+04	0.5	0.100	1.0E-01	I	5.0E-02	-	-	-	-	-	-	-	-	-	-	3.9E-08	1157	1.0E-03	1.2E+00	5.6E+03	4.7E+01	2.2E+02	1.3E+00	1.6E+00	MTCA 3-phase Partitioning Model
23	84-66-2	Diethyl Phthalate	-	4.9E+04	-	6.4E+04	-	4.4E+04	-	4.9E+05	-	4.1E+05	-	1.2E+06	-	-	-	3.0E+05	-	2.8E+06	-	5.3E+05	0.5	0.100	8.0E-01	I	4.0E-01	-	-	-	-	-	-	-	-	-	-	1.9E-05	104.9	1.0E-03	1.0E-01	4.4E+04	1.8E+04	6.1E+01	1.1E+02	1.1E+02	MTCA 3-phase Partitioning Model
24	105-67-9	2,4-Dimethylphenol	-	1.2E+03	-	1.6E+03	-	1.1E+03	-	1.2E+04	-	1.0E+04	-	3.1E+04	-	-	-	7.7E+03	-	7.0E+04	-	1.3E+04	0.5	0.100	2.0E-02	I	1.0E-02	-	-	-	-	-	-	-	-	-	-	8.2E-05	491.8	1.0E-03	4.9E-01	1.1E+03	6.6E+02	2.9E+01	9.1E+00	9.1E+00	MTCA 3-phase Partitioning Model
25	131-11-3	Dimethylphthalate	-	-	-	-	-	-	-	-	-	-	-	-	-	-	-	-	-	-	-	-	-	-	-	-	-	-	-	-	-	-	-	-	-	-	-	-	-	-	-	-	-	-	-	-	-	
26	117-84-0	Di-n-octyl phthalate	-	-	-	-	-	-	-	-	-	-	-	-	-	-	-	-	-	-	-	-	-	-	-	-	-	-	-	-	-	-	-	-	-	-	-	-	-	-	-	-	-	-	-	-	-	
27	206-44-0	Fluoranthene	-	2.3E+03	-	3.2E+03	-	2.2E+03	-	2.2E+04	-	2.0E+04	-	4.8E+04	-	-	-	1.4E+04	-	1.4E+05	-	2.7E+04	0.5	0.100	4.0E-02	I	2.0E-02	-	-	-	-	-	-	-	-	-	-	6.6E-04	55450	1.0E-03	5.5E+01	2.2E+03	1.1E+01	-	1.2E+01	1.2E+01	MTCA 3-phase Partitioning Model
28	86-73-7	Fluorene	-	2.3E+03	-	3.2E+03	-	2.2E+03	-	1.4E+04	-	2.0E+04	-	4.8E+04	-	-	-	1.4E+04	-	1.4E+05	-	2.7E+04	0.5	0.100	4.0E-02	I	2.0E-02	-	-	-	-	-	-	-	-	-	-	2.6E-03	9160	1.0E-03	9.2E+00	2.2E+03	4.5E+01	-	8.4E+00	8.4E+00	MTCA 3-phase Partitioning Model
29	91-57-6	2-Methylnaphthalene	-	3.1E+02	-	3.2E+02	-	2.2E+02	-	4.1E+03	-	2.0E+03	-	-	-	-	-	-	-	1.4E+04	-	2.7E+03	0.5	0.100	4.0E-03	I	2.0E-03	-	-	-	-	-	-	-	-	-	-	-	-	1.0E-03	-	-	-	2.2E+02	1.5E+02	-	2.2E+02	Modified MTCA B Unrestricted
30	95-48-7	2-Methylphenol(ortho-cresol)	-	3.1E+03	-	4.0E+03	-	2.8E+03	-	3.1E+04	-	2.6E+04	-	7.7E+04	-	3.6E+09	-	1.9E+04	-	1.8E+05	-	3.3E+04	0.5	0.100	5.0E-02	I	2.5E-02	6.0E-01	Cal	-	-	-	-	-	-	-	-	4.9E-05	306.5	1.0E-03	3.1E-01	2.8E+03	3.1E+03	6.3E+01	3.1E+01	3.1E+01	MTCA 3-phase Partitioning Model
31	106-44-5	4-Methylphenol (para-cresol)	-	3.1E+02	-	4.0E+02	-	2.8E+02	-	3.1E+03	-	2.6E+03	-	7.7E+03	-	3.6E+09	-	1.9E+03	-	1.8E+04	-	3.3E+03	0.5	0.100	5.0E-03	I	2.5E-03	-	-	-	-	-	-	-	-	-	-	3.2E-05	300.4	1.0E-03	3.0E-01	2.8E+02	3.3E+02	6.7E+02	3.3E+00	3.3E+00	MTCA 3-phase Partitioning Model
32	91-20-3	Naphthalene	3.6E+00	1.4E+02	-	1.6E+03	-	1.1E+03	1.8E+01	2.0E+01	-	1.0E+04	-	2.4E+04	1.8E+01	6.6E+02	1.8E+01	6.0E+02	-	7.0E+04	-	1.3E+04	0.5	0.100	2.0E-02	I	1.0E-02	8.6E-04	I	3.0E-03	I	-	-	-	3.4E-05	1.2E-07	-	2.0E-02	1544	1.0E-03	1.5E+00	3.6E+00	1.1E+02	n/a	3.9E+00	3.9E+00	MTCA 3-phase Partitioning Model
33	86-30-6	N-nitrosodiphenylamine	9.9E+01	-	2.0E+02	-	1.4E+02	-	3.5E+02	-	2.9E+03	-	8.8E+03	-	6.4E+07	-	2.2E+03	-	2.7E+04	-	5.1E+03	-	0.5	0.100	-	-	-	-	-	-	-	4.9E-03	I	9.8E-03	2.6E-06	9.1E-09	-	2.1E-04	2632	1.0E-03	2.6E+00	9.9E+01	1.6E+00	1.1E+01	9.0E-02	9.0E-02	MTCA 3-phase Partitioning Model
34	85-01-8	Phenanthrene	-	-	-	-	-	-	-	-	-	-	-	-	-	-	-	-	-	-	-	-	-	-	-	-	-	-	-	-	-	-	-	-	-	-	-	-	-	-	-	-	-	1.0E+02	-	1.0E+02	WA Sediment Quality Standards
35	108-95-2	Phenol	-	1.8E+04	-	2.4E+04	-	1.7E+04	-	1.8E+05	-	1.5E+05	-	4.6E+05	-	1.2E+09	-	1.1E+05	-	1.1E+06	-	2.0E+05	0.5	0.100	3.0E-01	I	1.5E-01	-	-	-	-	-	-	-	-	-	-	1.6E-05	187.2	1.0E-03	1.9E-01	1.7E+04	4.1E+04	4.2E+02	3.2E+02	3.2E+02	MTCA 3-phase Partitioning Model
36	129-00-0	Pyrene	-	1.7E+03	-	2.4E+03	-	1.7E+03	-	1.7E+04	-	1.5E+04	-	3.6E+04	-	-	-	1.1E+04	-	1.1E+05	-	2.0E+04	0.5	0.100	3.0E-02	I	1.5E-02	-	-	-	-	-	-	-	-	-	-	4.5E-04	54340	1.0E-03	5.4E+01	1.7E+03	9.8E+00	1.0E+03	1.1E+01	1.1E+01	MTCA 3-phase Partitioning Model
37		**PCBs**																																														
38	12674-11-2	Aroclor 1016	6.3E+00	3.9E+00	1.4E+01	6.0E+00	9.9E+00	4.2E+00	2.1E+01	3.7E+01	2.0E+02	3.8E+01	4.4E+02	7.7E+01	8.3E+06	-	1.4E+02	2.6E+01	2.5E+02	2.6E+02	3.6E+02	5.0E+01	0.5	0.100	7.5E-05	I	3.8E-05	-	-	-	-	7.0E-02	I	1.4E-01	2.0E-05	-	-	1.2E-02	47700	1.0E-03	4.8E+01	3.9E+00	6.4E-05	1.2E+01	6.1E-05	6.1E-05	MTCA 3-phase Partitioning Model
39	11104-28-2	Aroclor 1221	1.4E-01	-	5.9E-01	-	3.9E-01	-	5.4E-01	-	7.2E+00	-	1.5E+01	-	2.0E+01	-	3.9E+00	-	6.8E+01	-	1.3E+01	-	0.5	0.100	-	-	-	-	-	-	-	2.0E+00	I	4.0E+00	5.7E-04	-	-	1.2E-02	8397	1.0E-03	8.4E+00	1.4E-01	2.3E-05	1.2E+01	4.0E-06	4.0E-06	MTCA 3-phase Partitioning Model
40	53469-21-9	Aroclor 1242	2.2E-01	-	5.0E-01	-	3.5E-01	-	7.4E-01	-	7.2E+00	-	1.5E+01	-	2.9E+05	-	4.8E+00	-	6.6E+01	-	1.3E+01	-	0.5	0.100	-	-	-	-	-	-	-	2.0E+00	I	4.0E+00	-	-	-	1.2E-02	78100	1.0E-03	7.8E+01	2.2E-01	2.3E-05	1.2E+01	3.6E-05	3.6E-05	MTCA 3-phase Partitioning Model
41	12672-29-6	Aroclor 1248	2.2E-01	-	5.0E-01	-	3.5E-01	-	7.4E-01	-	7.2E+00	-	1.5E+01	-	2.9E+05	-	4.8E+00	-	6.6E+01	-	1.3E+01	-	0.5	0.100	-	-	-	-	-	-	-	2.0E+00	I	4.0E+00	-	-	-	1.2E-02	-	1.0E-03	-	2.2E-01	2.3E-05	1.2E+01	-	2.2E-01	EPA Residential RSL (May 2010)
42	11097-69-1	Aroclor 1254	2.2E-01	1.1E+00	5.0E-01	-	3.5E-01	-	7.4E-01	1.1E-01	7.2E+00	1.0E-01	1.5E+01	2.2E-01	2.9E+05	-	4.8E+00	6.8E+00	6.6E+01	-	1.3E+01	-	0.5	0.100	2.0E-05	I	1.0E-05	-	-	-	-	2.0E+00	I	4.0E+00	-	-	-	1.2E-02	130500	1.0E-03	1.3E+02	2.2E-01	5.5E-05	1.2E+01	1.4E-05	1.4E-05	MTCA 3-phase Partitioning Model
43	11096-82-5	Aroclor 1260	2.2E-01	-	5.0E-01	-	3.5E-01	-	7.4E-01	-	7.2E+00	-	1.5E+01	-	2.9E+05	-	4.8E+00	-	6.6E+01	-	1.3E+01	-	0.5	0.100	-	-	-	-	-	-	-	2.0E+00	I	4.0E+00	-	-	-	1.2E-02	349700	1.0E-03	3.5E+02	2.2E-01	2.3E-05	1.2E+01	1.6E-04	1.6E-04	MTCA 3-phase Partitioning Model
44	37324-23-2	Aroclor 1262	2.2E-01	-	5.0E-01	-	3.5E-01	-	7.4E-01	-	7.2E+00	-	1.5E+01	-	2.9E+05	-	4.8E+00	-	6.6E+01	-	1.3E+01	-	0.5	0.100	-	-	-	-	-	-	-	2.0E+00	I	4.0E+00	-	-	-	1.2E-02	-	-	-	2.2E-01	2.3E-05	1.2E+01	-	2.2E-01	EPA Residential RSL (May 2010)
45	11100-14-4	Aroclor 1268 [1]	2.2E-01	-	5.0E-01	-	3.5E-01	-	7.4E-01	-	7.2E+00	-	1.5E+01	-	2.9E+05	-	4.8E+00	-	6.6E+01	-	1.3E+01	-	0.5	0.100	-	-	-	-	-	-	-	2.0E+00	I	4.0E+00	-	-	-	1.2E-02	-	1.0E-03	-	2.2E-01	2.3E-05	1.2E+01	-	2.2E-01	EPA Residential RSL (May 2010)
46	1336-36-3	Total PCBs [1]	2.2E-01	-	5.0E-01	-	4.1E-01	-	7.4E-01	-	7.2E+00	-	1.5E+01	-	2.9E+05	-	4.8E+00	-	6.6E+01	-	1.9E+01	-	0.5	0.100	-	-	-	-	-	-	-	2.0E+00	I	2.0E+00	-	-	-	1.2E-02	130500	1.0E-03	1.3E+02	2.2E-01	2.3E-05	1.2E+01	6.0E-05	6.0E-05	MTCA 3-phase Partitioning Model
47	1746-01-6	2,3,7,8-TCDD TEQ	4.5E-06	-	7.7E-06	-	5.3E-06	-	1.8E-05	8.5E-04	1.1E-04	5.1E-04	1.1E-03	5.2E-03	4.4E+00	2.4E+02	1.0E-04	4.7E-04	1.0E-03	3.5E-03	1.9E-04	6.7E-04	0.5	0.100	1.0E-09	A	5.0E-10	-	-	-	-	1.3E+05	Cal	2.6E+05	-	-	-	-	-	-	-	-	-	-	-	4.5E-06	2.1E-10	n/a	-	4.5E-06	EPA Residential RSL (May 2010)
48																																																
49	[1] Aroclor 1254 values from EPA Regional Screening Level Tables (RSL) [May 2010] were used.																																															
50	[2] MTCA Standard Formulas for MTCA B (Equations 740-4 & 740-5) and for MTCA C (Equations 745-4 & 745-5) modified to include dermal exposure.																																															
51	[3] EPA Industrial RSL Levels soil ingestion rates were adjusted to 200 mg/day based on Region 10 Supplemental Human Health Risk Assessment Guidance on Soil Ingestion Rates (January 25, 2000).																																															
52	Screening levels for carcinogens were adjusted to obtain a 1E-05 screening level which is the default R10 RCRA Corrective Action Industrial target risk level.																																															
53	[4] From WAC 173-340-740 equations 740-4 and 740-5																																															
54	[5] Derived using this formula: RfCi mg/(kg-day) = RfC (mg/m ^{3}) x 20m ^{3}/day x 1/70kg (EPA 1994)																																															
55	[6] Direct contact Cleanup Level: Lowest of EPA Residential RSLs, Ecology Unrestricted Land Use and Industrial Values																																															
56	[7] Sediment Quality Stds. Chemical Criteria (organic carbon normalized) [WAC 173-204-320(a)]																																															
57	[8] Soil to Groundwater Cleanup values are based on the MTCA Cleanup Regulation Fixed Parameter three-phase partitioning model (WAC 173-340-747; Equation 747-1).																																															
58	NC = noncancer; C = Cancer; H = HEAST; P = EPA PROVISIONAL; A = ATSDR; Cal = CalEPA; I = IRIS; X=PPRTV appendix																																															
59	H_{cc} = Henry's Law constant (unitless); Blank cells = No data available.																																															
60	Reference																																															
61	EPA 1994. Health Effects Assessment Summary Tables (HEAST)																																															

Table 4. TMCLs for Mutagenic/Carcinogenic PAHs in Soil at the Boeing Plant 2 Facility

	A	B	C	D	E	F	G	H	I	J	K	L	M	N	O	P	Q	R	S	T	U	V	W	X	Y	Z	AA	AB	AC	AD	AE
1							Ingestion		MTCA [d]														EPA [h]	EPA [h]	Total	GW TMCL	Direct				
2			EPA [a]		Modified [b]	EPA [a]	R-10 [c]		Modified														Regional	Regional	R-10	From	Soil CUL				
3			Regional	MTCA	MTCA	Regional	Modified	Method C	Method C														Screening	Screening	Modified	Table 5					
4			Screening	Method B	Method B	Screening	Screening	Industrial	Industrial														Level	Level	Screening	Fish	Lowest of	SQS [i]	MTCA [j]	Soil	
5	CAS		Levels	Unrestricted	Unrestricted	Tables	Level	Soil CUL	Soil CUL	GI [e]	ABS [e]	RfD_{oral}	RfD_{dermal}	$RfD_{inhalation}$	CPF_{oral}	MTCA	SF_{oral} [f]	CPF_{dermal} [g]	H_{cc}	K_{oc}	F_{OC}	K_d	Industrial	Industrial	Level	Consumption	Columns	Organic	Soil → GW	TMCL	
6	Number	Chemical	Residential	Land Use	Land Use	Industrial	Industrial	1E-05 or HQ=1	1E-05 or HQ=1	Unitless	Unitless	mg/kg-day	mg/kg-day	mg/kg-day	$(mg/kg\text{-}day)^{-1}$	Unitless	(Adjusted)	(mg/kg-day)	(unitless)	(ml/g)	(g/g)	(L/kg)	Dermal	Inhalation	Industrial	& Early-Life	(D thru I)	Carbon	CUL		Basis
7			1E-06 or HQ=1	1 E-06 /HQ=1	1 E-06 /HQ=1	1E-06 or HQ=1	1E-05 or HQ=1	mg/kg	mg/kg								(mg/kg-day)						1 E-05	1 E-05	1 E-05	Exposures					
8			(mg/kg)	(mg/kg)	(mg/kg)	(mg/kg)	(mg/kg)																(mg/kg)	(mg/kg)	(mg/kg)	(ug/L)	(mg/kg)	(mg/kg)	(mg/kg)	(mg/kg)	
9	56-55-3	Benzo(a) anthracene	1.5E-01	1.4E+00	9.5E-01	1.4E+00	2.0E+01	1.8E+02	3.4E+01	0.5	0.100	-	-	-	-	0.10	7.3E-01	1.5E+00	1.4E-04	176900	1.0E-03	1.8E+02	4.6E+00	1.5E+05	3.7E+00	1.1E-04	1.5E-01	1.1E+02	4.0E-04	4.0E-04	MTCA 3 phase partitioning model
10	50-32-8	Benzo(a) pyrene	1.5E-02	1.4E-01	9.5E-02	1.4E-01	2.0E+00	1.8E+01	3.4E+00	0.5	0.100	-	-	-	7.3E+00	1.00	7.3E+00	1.5E+01	4.6E-05	587400	1.0E-03	5.9E+02	4.6E-01	1.5E+04	3.7E-01	6.6E-06	1.5E-02	9.9E+01	7.7E-05	7.7E-05	MTCA 3 phase partitioning model
11	205-99-2	Benzo (b) fluoranthene	1.5E-01	1.4E+00	9.5E-01	1.4E+00	2.0E+01	1.8E+02	3.4E+01	0.5	0.100	-	-	-	-	0.10	7.3E-01	1.5E+00	4.6E-03	599400	1.0E-03	6.0E+02	4.6E+00	1.5E+05	3.7E+00	5.3E-05	1.5E-01	2.3E+02	6.3E-04	6.3E-04	MTCA 3 phase partitioning model
12	207-08-9	Benzo(k) fluoranthene	1.5E+00	1.4E+00	9.5E-01	1.4E+01	2.0E+01	1.8E+02	3.4E+01	0.5	0.100	-	-	-	-	0.10	7.3E-01	1.5E+00	3.4E-05	587400	1.0E-03	5.9E+02	4.6E+01	1.5E+05	1.4E+01	5.5E-05	9.5E-01	-	6.5E-04	6.5E-04	MTCA 3 phase partitioning model
13	218-01-9	Chrysene	1.5E+01	1.4E+01	9.5E+00	1.4E+02	2.0E+02	1.8E+03	3.4E+02	0.5	0.100	-	-	-	-	0.01	7.3E-02	1.5E-01	3.9E-03	180500	1.0E-03	1.8E+02	4.6E+02	1.5E+06	1.4E+02	1.1E-03	9.5E+00	1.1E+02	4.0E-03	4.0E-03	MTCA 3 phase partitioning model
14	53-70-3	Dibenza(a,h)anthracene	1.5E-02	1.4E+00	9.5E-01	1.4E-01	2.0E+01	1.8E+02	3.4E+01	0.5	0.100	-	-	-	-	0.10	7.3E-01	1.5E+00	6.0E-07	1912000	1.0E-03	1.9E+03	4.6E-01	1.4E+04	4.5E-01	2.7E-05	1.5E-02	3.3E+01	1.0E-03	1.0E-03	MTCA 3 phase partitioning model
15	193-39-5	Indeno(1,2,3-cd)pyrene	1.5E-01	1.4E+00	9.5E-01	1.4E+00	2.0E+01	1.8E+02	3.4E+01	0.5	0.100	-	-	-	-	0.10	7.3E-01	1.5E+00	6.6E-05	1951000	1.0E-03	2.0E+03	4.6E+00	1.5E+05	3.7E+00	2.3E-05	1.5E-01	3.4E+01	8.9E-04	8.9E-04	MTCA 3 phase partitioning model
16		**Benzo(a) pyrene equivalents**																												7.7E-05	MTCA 3 phase partitioning model
17																															
18	Blank Cell (-) = No data available																														
19	[a] Screening values from EPA Regional Screening Levels Table (May 2010)																														
20	[b] Modified MTCA Method B includes dermal [WAC173-340-740; Equation 740-5]														**MTCA soil to groundwater equation: (Conc. in Soil [mg/kg]) =**																
21	[c] EPA Industrial RSL Levels soil ingestion rates were adjusted to 200 mg/day based on Region 10 Supplemental Human Health Risk Assessment Guidance on Soil Ingestion Rates (January 25, 2000).																														
22	[d] Modified MTCA Method C includes dermal [WAC173-340-740; Equation 745-5]														Where:																
23	[e] MTCA Default Values (WAC 173-340-745; Equation 745-5)														**Cw** = Groundwater Cleanup Level (ug/L)																
24	[f] Oral CSF adj = Cancer slope Factor for benzo(a)pyrene was adjusted for other cPAHs based on Washington TEFs (https://fortress.wa.gov/ecy/clarc/FocusSheets/tef.pdf).														**UCF** = Unit Conversion Factor (1 mg/1000 ug)																
25	[g] Dermal CPF: Oral CSF/GI (WAC 173-340-745; Equation 745-5).														**DF** = Dilution Factor (20)																
26	[h] Sediment Quality Standards (WAC 173-340-760).														k_d = Distribution Coefficient (L/kg)																
27	[i] From EPA RSL Tables User's Guide (May 2010)														θ_w = Water filled porosity (0.3 ml water/ml soil)																
28	[j] Soil to Groundwater Cleanup values are based on the MTCA Cleanup Regulation Fixed Parameter three-phase partitioning model (WAC 173-340-747; Equation 747-1).														θ_a = Air filled soil porosity (0.13 ml air/ml soil)																
29															H_{cc} = Henry's Law Constant (unitless)																
30															ρ_b = Dry soil bulk density (1.5 kg/L)																

$$C_w \times (UCF) \times DF((k_d + (\theta_w + \theta_a \times H_{cc}))$$
$$\rho_b$$

Table 5. TMCLs for Carcinogenic/Mutagenic PAHs In Groundwater at the Boeing Plant 2 Facility Based on Discharge to Surface Water

	A	B	C	D	E	F	G	H	I	J	K	L	M	N	O	P	Q	R
1						EPA AWQC [4]												
2–8	CAS Numbers	Chemicals	NTR [1] FW Chronic Criteria Eco (ug/L)	NTR [2] Marine Chronic Criteria Eco (ug/L)	NTR [3] Criteria HH organism only (ug/L)	FW Chronic Criteria Eco (ug/L)	Criteria HH organism only (ug/L)	Marine Chronic Criteria Eco (ug/L)	BCF [5] Fish (L/kg)	WA [6] TEF	CPF_{oral} $(mg/kg\text{-}d)^{-1}$	CPF_{oral} [7] Adjusted $(mg/kg\text{-}d)^{-1}$	Tribal [8] Fish Consumption Plus Early-Life Exposure [0-70 yrs] (ug/L)	API [9] Fish Consumption Plus Early-Life Exposure [0-30 yrs] (ug/L)	MTCA SW [10] Standard Method B CUL For Fish Ingestion (ug/L)	MTCA SW [11] Adjusted for API Method B (Adult) Fish Ingestion (ug/L)	TMCL (ug/L)	Basis
9	56-55-3	Benzo(a) anthracene	-	-	3.1E-02	-	1.8E-02	-	4.9E+03	0.1	-	7.3E-01	1.1E-04	2.3E-04	1.8E-03	7.7E-04	1.1E-04	Tribal
10	50-32-8	Benzo(a) pyrene	-	-	3.1E-02	-	1.8E-02	-	8.3E+03	1	7.3E+00	7.3E+00	6.6E-06	1.4E-05	1.1E-04	4.6E-05	6.6E-06	Tribal
11	205-99-2	Benzo (b) fluoranthene	-	-	3.1E-02	-	1.8E-02	-	1.0E+04	0.1	-	7.3E-01	5.3E-05	1.1E-04	8.5E-04	3.6E-04	5.3E-05	Tribal
12	207-08-9	Benzo(k) fluoranthene	-	-	3.1E-02	-	1.8E-02	-	9.9E+03	0.1	-	7.3E-01	5.5E-05	1.1E-04	8.9E-04	3.8E-04	5.5E-05	Tribal
13	218-01-9	Chrysene	-	-	3.1E-02	-	1.8E-02	-	4.9E+03	0.01	-	7.3E-02	1.1E-03	2.3E-03	1.8E-02	7.7E-03	1.1E-03	Tribal
14	53-70-3	Dibenza(a,h)anthracene	-	-	3.1E-02	-	1.8E-02	-	2.0E+04	0.1	-	7.3E-01	2.7E-05	5.6E-05	4.4E-04	1.9E-04	2.7E-05	Tribal
15	193-39-5	Indeno(1,2,3-cd)pyrene	-	-	3.1E-02	-	1.8E-02	-	2.4E+04	0.1	-	7.3E-01	2.3E-05	4.7E-05	3.7E-04	1.6E-04	2.3E-05	Tribal
16		**Benzo(a) pyrene tox equivalents**			**3.1E-02**		**1.8E-02**						**6.6E-06**	**1.4E-05**	**1.1E-04**	**4.6E-05**	**6.6E-06**	**Tribal**

17 AT x Target Risk

18 Conc(µg/L) = (CSFx CF1 x CF2) [BCF x ∑ (FIR / BW x EF x ED x ADAF)] **Equation 1**

19

20 **Early-Life Age Bins and Adjustment Factors**

21

					Tribal Input Parameters				API Input Parameters			
22												
23					**0-<2**	**2-<6**	**6-<16**	**16-<70**	**0-<2**	**2-<6**	**6-<16**	**16-<30**
24	Target Risk		(TR)	unitless	1.0E-06	1.0E-06	1.0E-06	1.0E-06	1.0E-06	1.0E-06	1.0E-06	1.0E-06
25	Fish ingestion rate w/o salmon		(FIR)	g/day	38.8	38.8	97.1	97.1	23	23	57.1	57.1
26	Conversion Factor -1		(CF)	mg/µg	1.0E-03	1.0E-03	1.0E-03	1.0E-03	1.0E-03	1.0E-03	1.0E-03	1.0E-03
27	Conversion Factor -2		(CF)	kg/g	1.0E-03	1.0E-03	1.0E-03	1.0E-03	1.0E-03	1.0E-03	1.0E-03	1.0E-03
28	Body Weight		(BW)	kg	15	15	81.8	81.8	15	15	63	63
29	Exposure Frequency		(EF)	days/yr	350	350	350	350	350	350	350	350
30	Exposure Duration		(ED)	yrs	2	4	10	54	2	4	10	14
31	Averaging Time		(AT)	days	25550	25550	25550	25550	25550	25550	25550	25550
32	ADAF			unitless	10	3	3	1	10	3	3	1

33

34 ADAF = Age-dependent adjustment factor (USEPA 1991. OSWER Default Exposure Factors. OSWER Directive 9285.6-03):

35 [1] Freshwater chronic Aquatic life – National Toxics Rule (NTR), 40 CFR 131.36

36 [2] Marine chronic Aquatic life – National Toxics Rule (NTR), 40 CFR 131.36

37 [3] Human health, consumption of organisms only – National Toxics Rule (NTR), 40 CFR 131.36

38 [4] EPA Ambient Water Quality Criteria (AWQCs), Clean Water Act Section 304

39 [5] Meylan, et al. (1999)Risk Assessment Protocol for Hazardous Waste Combustion Facilities (HHRAP) Guidance (2005) [EPA520-R05-006]

40 [6] WA TEF= Washington Toxicity Equivalency Factor: compared to a reference chemical, i.e., benzo(a)pyrene.

41 [7] CSF_{adj} = Cancer slope factor for benzo(a)pyrene was adjusted for other cPAHs based on Washington TEFs.

42 [8] Total Tribal consumption including early-life (i.e., 0 to 70 yrs)[Based on Equation 1]

43 [9] Total Asian Pacific Islanders (API) consumption including Early-life (i.e., 0 to 30 yrs)[Based on Equation 1]

44 [10] Based on standard MTCA Method B Equation 730 -2

45 [11] Based on MTCA Method B Equation 730 -2 adjusted to include API fish Ingestion rate, body weight and fish diet fraction of 1, per Dept. of Ecology policy.

46 Empty Cells (-): No data available

47 Reference

48 EPA. 2005. Supplemental Guidance for Assessing Susceptibility from Early-Life Exposure to Carcinogens. U.S. Environmental Protection Agency, Washington, DC, EPA/630/R-03/003F.

Table 6. TMCLs for Semivolatile Organic Chemicals (minus carcinogenic, mutagenic PAHs) in Groundwater at Boeing Plant 2 Facility

	A	B	C	D	E	F	G	H	I	J	K	L	Q	R	S	T	Y	Z	AA	AB	AC	AD	AE	AF	AG	AH	AI	AJ	AK	AL
1				EPA NTR [2,3,4]			WAC 173-201 A [5]		EPA AWQCs [6]				SW CUL [8]	SW CUL [8]	SW CUL [8]	SW CUL [8]	SW CUL [8]	SW CUL [8]	SW CUL [8]	SW CUL [8]										
2																														
3																									MTCA [9]	MTCA [9]	MTCA [10]	MTCA [10]		
4																									SW CUL	SW CUL	SW CUL	SW CUL		
5	CAS	Chemicals	Tap	FW	Marine	HH	FW	Marine	FW	HH	Marine		w/o salmon	w/o salmon	w/o salmon	w/o salmon	w/o salmon	w/o salmon	w/o salmon	w/o salmon					Standard	Standard	Adjusted	Adjusted		
6	Numbers		water	chronic	chronic	Criteria	chronic	chronic	chronic	Criteria	Criteria	BCF [7]	Fish Ingestion	Fish Ingestion	Fish Ingestion	Fish Ingestion	Fish Ingestion	Fish Ingestion	Fish Ingestion	Fish Ingestion	RfD_{oral}		CSF_{oral}		Method B	Method B	Method B	Fish Ingestion	GW CUL [11]	Basis [11]
7			EPA	Criteria	Criteria	Organism	Criteria	Criteria	Criteria	Organism	Criteria	(L/kg)	Tribal	Tribal	Tribal	Tribal	API	API	API	API					Fish Ingestion	Fish Ingestion	Fish Ingestion	Fish Ingestion		
			RSL	Eco	Eco	only	Eco	Eco	Eco	only	Eco		Adult	Adult	Child	Child	Adult	Adult	Child	Child	(mg/kg-d)	Source	$(mg/kg\text{-}d)^{-1}$	Source	(ug/L)	(ug/L)	(ug/L)	(ug/L)	(ug/L)	
			(ug/L)	(ug/L)	(ug/L)	(ug/L)	(ug/L)	(ug/L)	(ug/L)	(ug/L)	(ug/L)		(ug/L)	(ug/L)	(ug/L)	(ug/L)	(ug/L)	(ug/L)	(ug/L)	(ug/L)										
8		**SVOCs**											Noncancer	Cancer	Noncancer	Cancer	Noncancer	Cancer	Noncancer	Cancer					Noncancer	Cancer	Noncancer	Cancer		
9	83-32-9	Acenaphthene	2.2E+03	-	-	-	-	-	-	9.9E+02	-	2.0E+02	2.5E+02	-	1.2E+02		3.3E+02		1.9E+02		6.0E-02	I	-	-	7.7E+02	-	3.3E+02	-	1.2E+02	Tribal Child
10	208-96-8	Acenaphthylene	-	-	-	-	-	-	-	-	-	-	-	-	-	-	-	-	-	-	-	-	-	-	-	-	-	-	-	
11	120-12-7	Anthracene	1.1E+04	-	-	1.1E+05	-	-	-	4.0E+04	-	5.8E+02	4.3E+02	-	2.0E+02		5.7E+02		3.4E+02	-	3.0E-01	I	-	-	1.3E+03	-	5.7E+02	-	2.0E+02	Tribal Child
12	111-44-4	Bis(2-chloroethyl) ether	1.2E-02	-	-	1.4E+00	-	-	-	5.3E-01	-	2.0E+00	-	4.3E-01	-	2.1E+00	-	1.5E+00	-	3.5E+00	-	-	1.1E+00	I	-	3.0E+00	-	1.3E+00	4.3E-01	Tribal Adult
13	117-81-7	Bis(2-ethylhexyl)phthalate	4.8E+00	-	-	5.9E+00	-	-	-	2.2E+00	-	5.3E+01	3.2E+02	1.2E+00	1.5E+02	6.0E+00	4.1E+02	4.3E+00	2.4E+02	1.0E+01	2.0E-02	I	1.4E-02	I	9.7E+02	8.7E+00	4.1E+02	3.7E+00	1.2E+00	Tribal Adult
14	75-25-2	Bromoform	8.5E+00	-	-	3.6E+02		-	-	1.4E+02		1.3E+01	1.3E+03	8.8E+00	5.8E+02	4.3E+01	1.7E+03	3.1E+01	9.8E+02	7.2E+01	2.0E-02	I	7.9E-03	I	3.9E+03	6.2E+01	1.7E+03	2.6E+01	8.8E+00	Tribal Adult
15	85-68-7	Butylbenzyl phthalate	3.5E+01	-	-	-	-	-	-	1.9E+03	-	1.2E+03	1.4E+02	4.1E-01	6.5E+01	2.0E+00	1.9E+02	1.4E+00	1.1E+02	3.4E+00	2.0E-01	I	1.9E-03	I	4.4E+02	2.9E+00	1.9E+02	1.2E+00	4.1E-01	Tribal Adult
16	86-74-8	Carbazole	-	-	-	-	-	-	-	-	-	-	-	-	-	-	-	-	-	-	-	-	-	-	-	-	-	-	-	-
17	59-50-7	4-chloro-3-methylphenol	3.7E+03	-	-	-	-	-	-	-	-	-	-	-	-	-	-	-	-	-	1.0E-01	P	-	-	-	-	-	-	-	-
18	132-64-9	Dibenzofuran	-	-	-	-	-	-	-	-	-	-	-	-	-	-	-	-	-	-	-	-	-	-	-	-	-	-	-	-
19	84-74-2	Di-n-butylphthalate	3.7E+03	-	-	1.2E+04	-	-	-	4.5E+03	-	8.3E+02	1.0E+02	-	4.7E+01	-	1.3E+02	-	7.9E+01	-	1.0E-01	I	-	-	3.1E+02	-	1.3E+02	-	4.7E+01	Tribal Child
20	84-66-2	Diethylphthalate	2.9E+04	-	-	1.2E+05	-	-	-	4.4E+04	-	1.7E+01	4.0E+04	-	1.8E+04	-	5.3E+04	-	3.1E+04	-	8.0E-01	I	-	-	1.2E+05	-	5.3E+04	-	1.8E+04	Tribal Child
21	105-67-9	2,4-Dimethylphenol	7.3E+02	-	-	-	-	-	-	8.5E+02	-	1.2E+01	1.4E+03	-	6.6E+02	-	1.9E+03	-	1.1E+03	-	2.0E-02	I	-	-	4.4E+03	-	1.9E+03	-	6.6E+02	Tribal Child
22	131-11-3	Dimethylphthalate	-	-	-	2.9E+06	-	-	-	1.1E+06	-	3.2E+00	-	-	-	-	-	-	-	-	-	-	-	-	-	-	-	-	1.1E+06	EPA AWQC Human Health organism only
23	117-84-0	Di-n-octyl phthalate	-	-	-	-	-	-	-	-	-	6.4E+01	-	-	-	-	-	-	-	-	-	-	-	-	-	-	-	-	-	
24	206-44-0	Fluoranthene	1.5E+03	-	-	3.7E+02	-	-	-	1.4E+02	-	1.4E+03	2.4E+01	-	1.1E+01	-	3.1E+01	-	1.9E+01	-	4.0E-02	I	-	-	7.4E+01	-	3.1E+01	-	1.1E+01	Tribal Child
25	86-73-7	Fluorene	1.5E+03	-	-	1.4E+04	-	-	-	5.3E+03	-	3.4E+02	9.9E+01	-	4.5E+01	-	1.3E+02		7.6E+01	-	4.0E-02	I	-	-	3.0E+02	-	1.3E+02	-	4.5E+01	Tribal Child
26	91-57-6	2-Methylnaphthalene	1.5E+02	-	-	-	-	-	-	-	-	-	-	-	-	-	-	-	-	-	4.0E-03	I	-	-	-	-	-	-	1.5E+02	Tap water
27	95-48-7	2-Methylphenol (o-cresol)	1.8E+03	-	-	-	-	-	-	-	-	6.3E+00	6.7E+03	-	3.1E+03	-	8.7E+03	-	5.2E+03	-	5.0E-02	-	-	-	2.0E+04	-	-	-	3.1E+03	Tribal Child
28	106-44-5	4-Methylphenol (p-cresol)	1.8E+02	-	-	-	-	-	-	-	-	5.8E+00	7.3E+02	-	3.3E+02	-	9.5E+02	-	5.6E+02	-	5.0E-03	H	-	-	2.2E+03	-	-	-	3.3E+02	Tribal Child
29	99-09-02	3-Nitroanaline	-	-	-	-	-	-	-	-	-		-	-	-	-	-	-	-	-	-	-	-	-	-	-	-	-	-	-
30	91-20-3	Naphthalene	1.4E-01	-	-	-	-	-	-	-	-	6.9E+01	2.4E+02	-	1.1E+02		3.2E+02		1.9E+02	-	2.0E-02	I	-	-	7.5E+02	-	-	-	1.1E+02	Tribal Child
31	86-30-6	N-nitrosodiphenylamine	1.4E+01	-	-	1.6E+01	-	-	-	6.0E+00	-	1.2E+02	-	1.6E+00	-	7.8E+00	-	5.6E+00	-	1.3E+01	4.9E-03	I	4.9E-03	I	-	1.1E+01	-	4.8E+00	1.6E+00	Tribal Adult
32	85-01-8	Phenanthrene	-	-	-	-	-	-	-	-	-	5.8E+02	-	-	-	-	-	-	-	-	-	-	-	-	-	-	-	-	-	-
33	108-95-2	Phenol	1.1E+04	-	-	4.6E+06	-	-	-	8.6E+05	-	2.9E+00	8.9E+04	-	4.1E+04	-	1.2E+05	-	6.9E+04	-	3.0E-01	I	-	-	2.7E+05	-	1.2E+05	-	4.1E+04	Tribal Child
34	129-00-0	Pyrene	1.1E+03	-	-	1.1E+04	-	-	-	4.0E+03	-	1.2E+03	2.1E+01	-	9.8E+00	-	2.8E+01	-	1.7E+01	-	3.0E-02	I	-	-	6.6E+01	-	2.8E+01	-	9.8E+00	Tribal Child
35		**PCBs**																												
36	12674-11-2	Aroclor 1016	9.6E-01	-	3.0E-02	-	-	-	-	-	-	2.0E+04	3.2E-03	6.6E-04	1.4E-03	3.2E-03	4.1E-03	2.3E-03	2.4E-03	5.4E-03	7.5E-05	I	7.0E-02	I	9.7E-03	4.6E-03	4.1E-03	2.0E-03	6.4E-05	EPA AWQC Human Health organism only
37	11104-28-2	Aroclor 1221	6.8E-03	-	-	-	-	-	-	-	-	2.0E+04	-	2.3E-05	-	1.1E-04		8.0E-05		1.9E-04	-		2.0E+00	I	-	1.6E-04	-	6.9E-05	2.3E-05	Tribal Adult
38	53469-21-9	Aroclor 1242	3.4E-02	-	-	-	-	-	-	-	-	2.0E+04	-	2.3E-05	-	1.1E-04	-	8.0E-05	-	1.9E-04	-	-	2.0E+00	I	-	1.6E-04	-	6.9E-05	2.3E-05	Tribal Adult
39	12672-29-6	Aroclor 1248	3.4E-02	-	-	-	-	-	-	-	-	2.0E+04	-	2.3E-05	-	1.1E-04		8.0E-05		1.9E-04	-		2.0E+00	I	-	1.6E-04	-	6.9E-05	2.3E-05	Tribal Adult
40	11097-69-1	Aroclor 1254	3.4E-02	-	3.0E-02	-	-	-	-	-	-	8.4E+04	2.0E-04	5.5E-06	9.2E-05	2.7E-05	2.6E-04	1.9E-05	1.6E-04	4.5E-05	2.0E-05	I	2.0E+00	I	6.2E-04	3.9E-05	2.6E-04	1.6E-05	5.5E-06	Tribal Adult
41	11096-82-5	Aroclor 1260	3.4E-02	-	3.0E-02	-	-	-	-	-	-	2.0E+04		2.3E-05	-	1.1E-04		8.0E-05		1.9E-04	-		2.0E+00	I	-	1.6E-04	-	6.9E-05	2.3E-05	Tribal Adult
42	37324-23-2	Aroclor 1262 [1]	3.4E-02	-	-	-	-	-	-	-	-	2.0E+04		2.3E-05	-	1.1E-04		8.0E-05		1.9E-04	-		2.0E+00	I	-	1.6E-04	-	6.9E-05	2.3E-05	Tribal Adult
43	11100-14-4	Aroclor 1268 [1]	3.4E-02	-	-	-	-	-	-	-	-	2.0E+04		2.3E-05	-	1.1E-04		8.0E-05		1.9E-04	-		2.0E+00	I	-	1.6E-04	-	6.9E-05	2.3E-05	Tribal Adult
44	1336-36-3	Total PCBs [1]	3.4E-02	-	3.0E-02	1.7E-04	1.4E-02	3.0E-02	1.4E-02	6.4E-05	3.0E-02	2.0E+04		2.3E-05	-	1.1E-04		8.0E-05		1.9E-04	-		2.0E+00	I	-	1.6E-04	-	6.9E-05	2.3E-05	Tribal Adult
45	1746-01-6	2,3,7,8-TCDD TEQ	5.2E-07	-	-	1.4E-08	-	-	-	5.1E-09	-	3.4E+04	2.4E-08	2.1E-10	1.1E-08	1.0E-09	3.2E-08	7.2E-10	1.9E-08	1.7E-09	1.0E-09	Cal	1.3E+05	Cal	7.5E-08	1.4E-09	3.2E-08	6.2E-10	2.1E-10	Tribal Adult

46

47 [1] Tap water, RfD and CSF values for Aroclor 1254 used. Aroclors are best evaluated as an environmental mixture.

48 [2] Fresh water chronic Aquatic life – National Toxics Rule (NTR), 40 CFR 131.36

49 [3] Marine chronic Aquatic life – National Toxics Rule (NTR), 40 CFR 131.36

50 [4] Human Health – National Toxics Rule (NTR), 40 CFR 131.36

51 [5] WAC 173-201A (Washington Surface Water Standards).

52 [6] EPA Ambient Water Quality Criteria (AWQCs), Clean Water Act Section 304

53 [7] BCFs for Aroclors 1016 and 1254 from Meylan, et al. (1999). In EPA Human Health Risk Assessment Protocol for Hazardous Waste Combustion Facilities (HHRAP) Guidance (2005) [EPA520-R05-006]

54 BCFs for other Aroclors from http://oehha.ca.gov/air/hot_spots/pdf/apenh.pdf. Aroclors are best evaluate as an environmental mixture.

55 [8] Based on MTCA Method B and Equations 730 -1 & 730-2 but modified to include Tribal or API fish Ingestion rates, body weights and exposure durations

56 [9] Based on MTCA Method B and Equations 730 -1 & 730-2

57 [10] Based on MTCA Method B and Equations 730 -1 & 730-2 but modified to include Asian & Pacific Islander adult fish ingestion rate and body weight, per the Dept. of Ecology

58 [11] Where the TMCL is based on fish ingestion, it is w/o salmon because salmon was not considered a resident fish in the Duwamish River in the vicinity of the Boeing Plant 2 Facility.

59

60 H = HEAST; I = IRIS; Cal = CalEPA; P = Provisional Peer Reviewed Toxicity Value; C=cancer; NC=noncancer

61 Blank cells = no data available.

Table 7. TMCLs for Volatile Organic Chemicals and Total Petroleum Hydrocarbons in Soil at the Boeing Plant 2 Facility

	A	B	C	D	E	F	G	H	I	J	K	L	M	N	O	P	Q	R	S	T	U	V	W	X	Y	Z	AA	AB	AC	AD	AE	AF	AG	AH	AI	AJ	AK	AL	AM	AN	AO	AP	AQ	AR	AS	AT	AU	AV	AW
1																																																	
2																																																	
3																																																	
4																																																	
5	CAS Number	Chemicals	EPA [3] Regional Screening Level Residential 1 E-06 (mg/kg)	EPA [3] Regional Screening Level Residential HQ=1.0 (mg/kg)	MTCA Method B Unrestricted Land Use Ingestion only 1 E-06 (mg/kg)	MTCA Method B Unrestricted Land Use Ingestion only HQ=1 (mg/kg)	Modified MTCA [4] Method B Unrestricted Land Use 1 E-06 (mg/kg)	Modified MTCA [4] Method B Unrestricted Land Use HQ=1 (mg/kg)	EPA [5] Regional Screening Level Industrial 1 E-06 (mg/kg)	EPA [5] Regional Screening Level Industrial HQ=1.0 (mg/kg)	R-10 [6] Modified Screening Level Industrial Ingestion 1 E-05 (mg/kg)	R-10 [6] Modified Screening Level Industrial Ingestion HQ=1.0 (mg/kg)	EPA [7] Regional Screening Level Industrial Dermal 1 E-05 (mg/kg)	EPA [7] Regional Screening Level Industrial Dermal HQ=1.0 (mg/kg)	EPA [7] Regional Screening Level Industrial Inhalation 1 E-05 (mg/kg)	EPA [7] Regional Screening Level Industrial Inhalation HQ=1.0 (mg/kg)	Total R-10 Modified Screening Level Industrial 1 E-05 (mg/kg)	Total R-10 Modified Screening Level Industrial HQ=1.0 (mg/kg)	MTCA Method C Industrial 1 E-05 mg/kg	MTCA Method C Industrial HQ=1 mg/kg	Modified MTCA [8] Method C Industrial 1 E-05 mg/kg	Modified MTCA [8] Method C Industrial HQ=1 mg/kg	Vapor [9] Pressure at 25 °C (mm)	GI [10] Absorption Conversion Factor	Dermal [10] Absorption Factor	RfD_{oral} mg/kg-day	Source	RfC_{inhal} (mg/m^3)	Source	RfD^{11}_{dermal} mg/kg-day	RfD^{12}_{inhal} mg/kg-day	CSF_{oral} $(mg/kg\text{-}day)^{-1}$	Source	$CSF_{oral(adjusted)}$ $(mg/kg\text{-}day)^{-1}$	CSF^{10}_{derma} $(mg/kg\text{-}day)^{-1}$	CSF dermal $_{(adjust)}$ $(mg/kg\text{-}day)^{-1}$	IUR ug/m^3	Source	CSF^{13}_{inhal} $(mg/kg\text{-}day)^{-1}$	H_{cc} (unitless)	Koc (ml/g)	Kd (L/kg)	Direct Contact Soil CUL mg/kg	Total R-10 Modified Screening Level Industrial 1 E-05 (mg/kg) Cancer	Total R-10 Modified Screening Level Industrial HQ=1.0 (mg/kg) Noncancer	GW CUL (ug/L)	MTCA [14] Soil → GW CUL (mg/kg)	Soil TMCL (mg/kg)	Basis
6																																																	
7																																																	
8																																																	
9																																																	
10		**Volatile Organic Compounds**	**Cancer**	**Noncancer**	**Cancer**	**Noncancer**	**Cancer**	**Noncancer**	**Cancer**	**Noncancer**	**Cancer**	**Noncancer**	**Cancer**	**Noncancer**	**Cancer**	**Noncancer**	**Cancer**	**Noncancer**	**Cancer**	**Noncancer**	**Cancer**	**Noncancer**																											
11	67-64-1	Acetone	-	6.1E+04	-	8.0E+03	-	7.2E+04	-	6.3E+05	-	4.5E+06	-	-	-	2.0E+06	-	1.4E+06	-	3.5E+05	-	1.7E+07	232	0.8	0.0005	9.0E-01	I	3.1E+01	I	7.2E-01	8.9E+00	-	-	-	-	-	-	-	-	-	1.6E-03	2.364	2.4E-03	8.0E+03	-	1.4E+06	1.1E+05	4.5E+02	4.5E+02	MTCA 3-phase Partitioning Model
12	71-43-2	Benzene	1.1E+00	8.6E-01	1.8E+01	-	3.7E-01	3.2E+02	5.4E+00	4.5E+02	5.2E+02	4.4E+03	-	-	6.0E+01	5.0E+02	5.4E+01	5.0E+02	2.4E+03	1.4E+04	2.7E+03	1.7E+04	95	0.8	0.0005	4.0E-03	I	3.0E-02	I	3.2E-03	8.6E-03	5.5E-02	I	-	6.9E-02	-	7.8E-06	I	2.7E-02	2.3E-01	145.8	1.5E-01	1.1E+00	5.4E+01	-	2.0E+00	1.5E-02	1.5E-02	MTCA 3-phase Partitioning Model
13	75-27-4	Bromodichloromethane	2.7E-01	1.6E+03	1.6E+01	-	7.4E+00	1.6E+03	1.4E+00	2.0E+04	1.1E+02	-	-	-	1.4E+01	-	1.2E+01	-	2.1E+03	7.0E+04	8.8E+02	-	50	0.8	0.03	2.0E-02	I	-	-	1.6E-02	-	6.2E-02	I	-	7.8E-02	-	3.7E-05	C	1.3E-01	6.6E-02	31.82	3.2E-02	2.7E-01	1.2E+01	-	1.8E+00	8.6E-03	8.6E-03	MTCA 3-phase Partitioning Model
14	78-93-3	2-Butanone (MEK)	-	2.8E+04	-	4.8E+04	-	4.4E+04	-	2.0E+05	-	7.3E+05	-	-	-	2.9E+05	-	2.1E+05	-	2.1E+06	-	2.8E+06	91	0.8	0.03	6.0E-01	I	5.0E+00	2.4E-02	4.8E-01	1.4E+00	-	-	-	-	-	-	-	-	-	2.3E-03	4.51	4.5E-03	2.8E+04	-	2.1E+05	7.3E+04	3.0E+02	3.0E+02	MTCA 3-phase Partitioning Model
15	104-51-8	n-butylbenzene	-	-	-	-	-	-	-	-	-	-	-	-	-	-	-	-	-	-	-	-	1	0.8	0.03	-	-	-	-	-	-	-	-	-	-	-	-	-	-	-	-	-	-	-	-	-	-	-	-
16	135-98-8	sec-butylbenzene	-	-	-	-	-	-	-	-	-	-	-	-	-	-	-	-	-	-	-	-	2	0.8	0.03	-	-	-	-	-	-	-	-	-	-	-	-	-	-	-	-	-	-	-	-	-	-	-	-
17	75-15-0	Carbon disulfide	-	8.2E+02	-	8.0E+03	-	8.0E+03	-	3.7E+03	-	1.0E+05	-	-	-	3.9E+03	-	3.8E+03	-	3.5E+05	-	4.0E+05	359	0.8	0.0005	1.0E-01	I	7.0E-01	I	8.0E-02	2.0E-01	-	-	-	-	-	-	-	-	-	1.2E+00	21.73	2.2E-02	8.2E+02	-	3.8E+03	3.9E+03	2.5E+01	2.5E+01	MTCA 3-phase Partitioning Model
18	56-23-5	Carbon Tetrachloride	2.5E-01	6.1E-01	7.7E+00	-	1.9E+01	3.2E+02	6.0E+02	4.1E+03	2.7E+02	1.5E+04	-	-	3.3E+01	7.0E+02	2.9E+01	6.7E+02	1.0E+03	-	5.4E+02	5.5E+04	115	0.8	0.0005	4.0E-03	I	1.0E-01	I	3.2E-03	2.9E-02	1.3E-01	I	-	1.6E-01	-	1.5E-05	I	5.3E-02	1.2E+00	43.89	4.4E-02	2.5E-01	3.1E+01	6.7E+02	2.5E-01	1.7E-03	1.7E-03	MTCA 3-phase Partitioning Model
19	108-90-7	Chlorobenzene	-	2.9E+02	-	1.6E+03	-	1.6E+03	-	1.4E+03	-	7.3E+03	-	-	-	1.5E+03	-	1.2E+03	-	7.0E+04	-	2.3E+04	12	0.8	0.03	2.0E-02	I	5.0E-02	-	1.6E-02	1.4E-02	-	-	-	-	-	-	-	-	-	1.5E-01	233.9	2.3E-01	2.9E+02	-	1.2E+03	2.7E+02	2.4E+00	2.4E+00	MTCA 3-phase Partitioning Model
20	75-00-3	Chloroethane (Ethyl Chloride)	-	1.5E+04	-	-	-	-	-	6.1E+04	-	1.5E+05	-	-	-	6.1E+04	-	5.9E+04	4.5E+04	1.4E+05	-	-	1010	0.8	0.0005	-	-	1.0E+01	I	-	2.9E+00	-	-	-	-	-	-	-	-	-	3.6E-01	21.73	2.2E-02	3.5E+02	-	5.6E+04	2.1E+04	1.1E+02	1.1E+02	MTCA 3-phase Partitioning Model
21	110-75-8	2-chloroethylvinylether	-	-	-	-	-	-	-	-	-	-	-	-	-	-	-	-	-	-	-	-	-	-	-	-	-	-	-	-	-	-	-	-	-	-	-	-	-	-	-	-	-	-	-	-	-	-	-
22	74-87-3	Chloromethane	-	1.2E+02	-	-	-	-	-	5.0E+02	-	1.3E+04	-	-	-	5.0E+02	-	4.8E+02	1.0E+04	-	-	-	4300	0.8	0.0005	-	-	9.0E-02	I	-	2.8E-02	-	-	-	-	-	-	-	-	-	3.6E-01	13.22	1.3E-02	7.7E+01	-	4.8E+02	1.3E+02	9.3E-01	9.3E-01	MTCA 3-phase Partitioning Model
23	67-66-3	Chloroform	2.9E-01	2.1E+02	-	1.6E+02	1.2E+01	8.0E+02	1.0E+04	1.1E+03	-	5.1E+03	-	-	1.5E+01	1.2E+03	1.5E+01	9.7E+02	2.2E+04	-	2.3E+03	2.0E+04	197	0.8	0.0005	1.0E-02	I	-	-	8.0E-03	-	3.1E-02	Cal	-	3.9E-02	-	2.3E-05	I	8.1E-02	1.5E-01	31.82	3.2E-02	2.9E-01	1.5E+01	9.7E+02	4.3E-00	2.1E-02	2.1E-02	MTCA 3-phase Partitioning Model
24	95-50-1	1,2-dichlorobenzene	-	1.9E+03	-	7.2E+03	-	7.2E+03	-	9.8E+03	-	4.6E+04	-	-	-	1.1E+04	-	8.9E+03	-	3.2E+05	-	1.3E+05	1	0.8	0.03	9.0E-02	I	-	-	7.2E-02	-	-	-	-	-	-	-	-	-	7.6E-02	382.9	3.8E-01	1.9E+03	-	8.9E+03	4.4E+02	5.2E+00	5.2E+00	MTCA 3-phase Partitioning Model
25	75-34-3	1,1-dichloroethane	3.3E+00	1.6E+04	1.6E+04	-	1.8E+02	1.6E+04	1.7E+01	2.0E+05	2.6E+03	-	-	-	1.7E+02	-	1.6E+02	-	-	7.0E+05	1.3E+04	4.0E+05	227	0.8	0.0005	2.0E-01	Cal	-	-	1.6E-01	-	5.7E-03	Cal	-	7.1E-03	-	1.6E-06	Cal	5.6E-03	2.3E-01	31.82	3.2E-02	3.3E+00	1.6E+02	-	3.3E+01	1.7E-01	1.7E-01	MTCA 3-phase Partitioning Model
26	107-06-2	1,2-dichloroethane	4.3E-01	1.4E+03	1.1E+01	1.0E+01	-	1.6E+03	-	1.5E+04	-	1.5E+04	-	-	2.3E+01	5.2E+04	2.0E+01	5.2E+04	1.4E+03	7.5E+04	6.0E+02	5.9E+04	78	0.8	0.03	2.9E-02	P	2.4E+00	-	1.6E-02	6.9E-01	9.1E-02	I	-	1.1E-01	-	2.6E-05	I	9.1E-02	4.0E-02	38.8	4.0E-02	4.3E-01	2.0E+01	-	3.6E+00	1.7E-02	1.7E-02	MTCA 3-phase Partitioning Model
27	75-35-4	1,1-dichloroethene	-	2.4E+02	-	4.0E+03	-	4.0E+03	-	1.1E+03	-	2.6E+04	-	-	-	1.1E+03	-	1.1E+03	-	7.0E+05	-	9.9E+04	600	0.8	0.0005	5.0E-02	I	-	-	4.0E-02	-	-	-	-	-	-	-	-	-	1.1E+00	31.82	3.2E-02	2.4E+02	-	1.1E+03	2.3E+03	1.5E+01	1.5E+01	MTCA 3-phase Partitioning Model
28	156-59-2	cis-1,2-dichloroethene	-	7.8E+02	-	8.0E+02	-	8.0E+02	-	1.0E+04	-	5.1E+03	-	-	-	-	-	5.1E+03	-	3.5E+04	-	2.0E+04	200	0.8	0.0005	1.0E-02	P	-	-	8.0E-03	-	-	-	-	-	-	-	-	-	1.7E-01	39.6	4.0E-02	7.8E+02	-	5.1E+03	6.7E+02	3.4E+00	3.4E+00	MTCA 3-phase Partitioning Model
29	156-60-5	trans-1,2-dichloroethene	-	1.5E+02	-	1.6E+03	-	1.6E+03	-	6.9E+02	-	1.0E+04	-	-	-	7.1E+02	-	6.6E+02	-	7.0E+04	-	4.0E+04	331	0.8	0.0005	2.0E-02	I	-	-	1.6E-02	-	-	-	-	-	-	-	-	-	3.6E-01	39.6	4.0E-02	1.5E+02	-	6.6E+02	9.4E+02	5.1E+00	5.1E+00	MTCA 3-phase Partitioning Model
30	100-41-4	Ethylbenzene	5.4E+00	3.5E+03	-	8.0E+03	5.0E+01	8.0E+03	2.7E+01	2.1E+04	1.3E+03	1.5E+05	-	-	3.0E+02	2.7E+04	2.4E+02	2.3E+04	-	3.5E+05	1.2E+03	2.8E+05	10	0.8	0.03	1.0E-01	I	1.0E+00	-	8.0E-02	2.9E-01	1.1E-02	Cal	-	1.4E-02	-	2.5E-06	Cal	8.8E-03	3.2E-01	446.1	4.9E-01	5.4E+00	2.4E+02	2.3E+04	8.0E+02	1.1E+01	5.4E+00	EPA Residential RSL (20100)
31	98-82-8	Isopropylbenzene (Cumene)	-	2.1E+03	-	8.0E+03	-	8.0E+03	-	1.1E+04	-	5.1E+04	-	-	-	1.2E+04	-	9.7E+03	-	3.5E+05	-	1.5E+05	5	0.8	0.03	1.0E-01	I	-	-	8.0E-02	-	-	-	-	-	-	-	-	-	4.7E-01	697.8	7.0E-01	2.2E+03	-	9.7E+03	2.7E+02	5.1E+00	5.1E+00	MTCA 3-phase Partitioning Model
32	99-87-6	4-isopropyltoluene	-	-	-	-	-	-	-	-	-	-	-	-	-	-	-	-	-	-	-	-	1	0.8	0.03	-	-	-	-	-	-	-	-	-	-	-	-	-	-	-	-	-	-	-	-	-	-	-	-
33	75-09-2	Methylene Chloride	1.1E+01	1.7E+03	1.3E+02	-	6.0E+02	4.8E+03	5.3E+01	9.2E+03	8.7E+03	3.1E+04	-	-	6.2E+02	1.1E+04	5.6E+02	8.1E+03	1.8E+04	2.1E+05	4.4E+04	5.5E+05	435	0.8	0.0005	6.0E-02	I	1.0E+00	A	4.8E-02	2.9E-01	7.5E-03	I	-	9.4E-03	-	4.7E-07	I	1.6E-03	9.0E-02	21.73	2.2E-02	1.1E+01	4.7E+02	1.6E-03	6.1E+01	2.8E-01	2.8E-01	MTCA 3-phase Partitioning Model
34	103-65-1	n-propylbenzene	-	3.4E+03	-	-	-	8.0E+03	-	2.1E+04	-	5.1E+04	-	1.5E+05	-	3.3E+04	-	2.0E+04	-	-	-	-	3	0.8	0.03	1.0E-01	E	-	-	8.0E-02	-	-	-	-	-	-	-	-	-	5.4E-01	813.1	8.1E-01	3.4E+03	-	2.0E+04	1.3E+03	2.8E+01	2.8E+01	MTCA 3-phase Partitioning Model
35	79-34-5	1,1,2,2-tetrachloroethane	5.6E-01	-	5.0E+00	-	4.6E+00	-	2.8E+00	4.1E+03	7.2E+01	-	-	-	3.4E+01	-	2.3E+01	-	6.6E+02	-	2.5E+02	-	5	0.8	0.03	4.0E-03	P	-	-	3.2E-03	-	2.0E-01	I	-	2.5E-01	-	5.8E-05	I	2.0E-01	1.4E-02	94.94	9.5E-02	5.6E-01	2.3E+01	-	3.3E-01	2.0E-03	2.0E-03	MTCA 3-phase Partitioning Model
36	127-18-4	Tetrachloroethene	5.5E-01	3.7E+02	1.9E+00	-	1.7E+00	8.9E+02	2.6E+00	2.3E+03	2.6E+01	-	-	-	5.3E+01	3.0E+03	1.8E+01	-	2.4E+02	3.5E+04	1.0E+02	-	19	0.8	0.03	1.0E-02	I	-	-	8.0E-03	-	5.4E-01	Cal	-	6.8E-01	-	5.9E-06	I	2.1E-02	7.5E-01	94.94	9.5E-02	5.5E-01	1.8E+01	-	2.1E-02	1.5E-04	1.5E-04	MTCA 3-phase Partitioning Model
37	108-88-3	Toluene	-	5.0E+03	-	6.4E+03	-	6.4E+03	-	4.5E+04	-	4.1E+04	-	-	-	1.0E+05	-	2.9E+04	-	2.8E+05	-	1.2E+05	28	0.8	0.03	8.0E-02	I	-	-	6.4E-02	-	-	-	-	-	-	-	-	-	2.7E-01	233.9	2.3E-01	5.5E+03	-	2.5E+04	1.3E+03	1.2E+01	1.2E+01	MTCA 3-phase Partitioning Model
38	71-55-6	1,1,1-trichloroethane	-	8.7E+03	-	1.6E+05	-	1.6E+05	-	3.8E+04	-	1.0E+06	-	-	-	3.9E+04	-	3.8E+04	-	7.0E+06	-	4.0E+06	124	0.8	0.0005	2.0E+00	E	-	-	1.6E+00	-	-	-	-	-	-	-	-	-	7.1E-01	43.89	4.4E-02	8.7E+03	-	3.8E+04	4.6E+04	2.8E+02	2.8E+02	MTCA 3-phase Partitioning Model
39	79-00-5	1,1,2-trichloroethane	1.1E+00	3.1E+02	1.8E+01	-	1.6E+01	3.2E+02	5.3E+00	4.1E+03	2.5E+02	-	-	-	6.0E+01	-	4.8E+01	-	2.3E+03	1.4E+04	9.6E+02	-	23	0.8	0.03	4.0E-03	I	-	-	3.2E-03	-	5.7E-02	I	-	7.1E-02	-	-	-	-	3.7E-02	60.7	6.1E-02	1.1E+00	4.8E+01	-	2.3E+00	1.2E-02	1.2E-02	MTCA 3-phase Partitioning Model
40	79-01-6	Trichloroethylene[1]	2.2E-01	1.1E+01	1.1E+01	7.0E+01	-	1.1E+00	-	2.5E+03	-	1.4E+02	-	-	1.5E+02	-	1.4E+02	-	1.5E+03	1.4E+04	1.9E+03	-	69	0.8	0.03	-	-	-	-	-	-	8.9E-02	Cal	-	1.1E-01	-	2.0E-06	Cal	7.0E-03	4.2E-01	60.7	6.1E-02	2.8E+00	1.4E+02	-	7.4E-01	4.4E-03	4.4E-03	MTCA 3-phase Partitioning Model
41	120-82-1	1,2,4-trichlorobenzene	-	6.2E+01	-	8.0E+02	-	7.4E+02	9.9E+01	2.7E+02	-	5.1E+03	-	-	-	2.8E+02	-	2.7E+02	-	3.5E+04	-	1.5E+04	0.5	0.8	0.03	1.0E-02	I	-	-	8.0E-03	-	2.9E-02	Cal	-	3.6E-02	-	-	-	-	5.8E-02	1356	1.4E+00	2.2E+01	-	2.7E+02	1.6E+01	5.0E-01	5.0E-01	MTCA 3-phase Partitioning Model
42	75-69-4	Trichlorofluoromethane	-	7.9E+02	-	2.4E+04	-	2.4E+04	-	3.4E+03	-	1.5E+05	-	-	-	3.4E+03	-	3.3E+03	-	1.1E+06	-	6.0E+05	803	0.8	0.0005	3.0E-01	I	-	-	2.4E-01	-	-	-	-	-	-	-	-	-	4.0E+00	43.89	4.4E-02	7.9E+02	-	3.3E+03	6.9E+03	8.1E+01	8.1E+01	MTCA 3-phase Partitioning Model
43	76-13-1	1,2,2-trichloro-1,1,2-trifluoroethane	-	4.3E+04	-	2.4E+06	-	2.4E+04	-	1.8E+05	-	1.5E+05	-	-	-	1.8E+05	-	8.3E+04	-	1.1E+08	-	6.0E+05	363	0.8	0.0005	3.0E-01	I	3.0E-01	H	2.4E-01	-	-	Cal	-	-	-	-	-	-	2.0E+00	196.8	2.0E-01	2.4E+04	-	8.3E+04			2.4E+04	Modified MTCA B Unrestricted Land Use
44	95-63-6	1,2,4-trimethylbenzene	-	6.2E+01	-	4.0E+03	-	1.5E+02	-	2.6E+02	-	1.0E+03	-	-	-	2.6E+02	-	2.1E+02	-	1.8E+05	-	3.2E+03	2	0.8	0.03	-	-	7.0E-03	P	2.5E-03	2.0E-03	-	-	-	-	-	-	-	-	2.5E-01	814.3	8.1E-01	6.2E+01	-	2.1E+02	1.5E+01	2.5E-01	2.5E-01	MTCA 3-phase Partitioning Model
45	108-67-8	1,3,5-trimethylbenzene	-	7.8E+02	-	4.0E+03	-	7.4E+02	-	1.0E+04	-	5.1E+03	-	-	-	-	-	5.1E+03	-	1.8E+05	-	1.5E+04	2	0.8	0.03	1.0E-02	P	-	-	8.0E-03	-	-	-	-	-	-	-	-	-	3.2E-01	832.1	8.0E-01	7.8E+02	-	5.1E+03	4.5E+01	7.5E-01	7.5E-01	MTCA 3-phase Partitioning Model
46	75-01-4	Vinyl chloride	6.0E-02	-	6.7E-01	-	5.7E+01	-	1.7E+00	3.9E+02	9.3E+02	-	-	-	2.9E+01	4.5E+02	2.8E+01	-	8.8E+01	1.1E+04	1.0E+02	-	2980	0.8	0.0005	3.0E-03	I	-	-	2.4E-03	-	1.5E+00	I	7.2E-01	1.9E+00	9.0E-01	4.4E-06	I	1.5E-02	1.1E+00	21.73	2.2E-02	6.0E-02	2.8E+01	-	2.4E+00	1.5E-02	1.5E-02	MTCA 3-phase Partitioning Model
47	108-38-3	m-Xylene	-	3.4E+03	-	1.6E+05	-	1.5E+04	-	1.7E+04	-	1.0E+05	-	-	-	1.8E+04	-	1.5E+04	-	7.0E+06	-	2.9E+05	8	0.8	0.03	2.0E-01	I	-	-	1.6E-01	-	-	-	-	-	-	-	-	-	3.0E-01	375.3	3.8E-01	3.4E+03	-	1.5E+04	1.3E+03	1.6E+01	1.6E+01	MTCA 3-phase Partitioning Model
48	95-47-6	o-Xylene	-	3.8E+03	-	1.6E+05	-	1.5E+04	-	1.9E+04	-	1.0E+05	-	-	-	2.1E+04	-	1.7E+04	-	7.0E+06	-	2.9E+05	7	0.8	0.03	2.0E-01	I	-	-	1.6E-01	-	-	-	-	-	-	-	-	-	2.1E-01	382.9	3.8E-01	3.8E+03	-	1.7E+04	1.6E+03	1.9E+01	1.9E+01	MTCA 3-phase Partitioning Model
49	106-42-3	p-Xylene	-	3.4E+03	-	1.6E+05	-	1.5E+04	-	1.7E+04	-	1.0E+05	-	-	-	1.8E+04	-	1.5E+04	-	7.0E+06	-	2.9E+05	9	0.8	0.03	2.0E-01	I	-	-	1.6E-01	-	-	-	-	-	-	-	-	-	3.1E-01	375.3	3.8E-01	3.4E+03	-	1.5E+04	1.6E+03	1.9E+01	1.9E+01	MTCA 3-phase Partitioning Model
50	1330-20-7	Total Xylene	-	6.3E+02	-	1.6E+04	-	1.5E+04	-	2.7E+03	-	1.0E+05	-	-	-	2.7E+03	-	2.6E+03	-	7.0E+05	-	2.9E+05	9	0.8	0.03	2.0E-01	I	-	-	1.6E-01	-	-	-	-	-	-	-	-	-	2.6E-01	382.9	3.8E-01	6.3E+02	-	2.6E+03	1.6E+03	1.9E+01	1.9E+01	MTCA 3-phase Partitioning Model
51		**Petroleum Hydrocarbons**																																															
52	-	TPH-Gasoline Range[2]	-	-	-	-	-	-	-	-	-	-	-	-	-	-	-	-	-	-	-	-	-	-	-	-	-	-	-	-	-	-	-	-	-	-	-	-	-	-	-	1.0E+02	-	-	5.0E+02	-	1.0E+02	MTCA Method A Soil Cleanup Levels for Unrestricted Land Uses [WAC 173-340-900]
53	-	TPH-Diesel Range[2]	-	-	-	-	-	-	-	-	-	-	-	-	-	-	-	-	-	-	-	-	-	-	-	-	-	-	-	-	-	-	-	-	-	-	-	-	-	-	-	2.0E+03	-	-	5.0E+02	-	2.0E+03	MTCA Method A Soil Cleanup Levels for Unrestricted Land Uses [WAC 173-340-900]
54	-	TPH-oil Range[2]	-	-	-	-	-	-	-	-	-	-	-	-	-	-	-	-	-	-	-	-	-	-	-	-	-	-	-	-	-	-	-	-	-	-	-	-	-	-	-	2.0E+03	-	-	5.0E+02	-	2.0E+03	MTCA Method A Soil Cleanup Levels for Unrestricted Land Uses [WAC 173-340-900]
55																																																	

56 Blank cells ( ) No data available.

57 EPA RSL was adjusted by Region 10 to reflect an Oral and inhalation cancer slope factor of 0.089 (mg/kg-day) for TCE.

58 Values are from MTCA A Unrestricted land use Table 740-1

59 [3] EPA's Residential value include ingestion, dermal and inhalation (EPA RSL, May 2010)

60 [4] MTCA B (Equations 740-4 &740-5) were used but modified to include dermal and inhalation.

61 [5] EPA's Industrial value include ingestion, dermal and inhalation (EPA RSL, May 2010).

62 [6] EPA Industrial RSL Levels soil ingestion rates were adjusted to 200 mg/day based on Region 10 Supplemental Human Health Risk Assessment Guidance on Soil Ingestion Rates (January 25, 2000).

63 [7] From EPA RSL Tables (May 2010)

64 [8] MTCA C (Equations 745-4 & 745-5) were used but modified to include dermal and inhalation.

65 [9] Syracuse Research Corporation (SRC). 2005. PHYSPROP Database. SRC. Syracuse, NY. (http://www.syrres.com/esc/physdemo.htm). In: EPA RSL Tables User's Guide (May 2010)

66 [10] MTCA Default Values (WAC 173-340-745; Equations 745-4 & 745-5).

67 [11] Derived using MTCA Default Values (WAC 173-340-745; Equations 745-4 & 745-5).

68 [12] Derived using this formula: RfDi mg/(kg-day) = RfC (mg/m ^{3}) x 20m ^{3}/day x 1/70kg (EPA 1994)

69 [13] Derived using this formula: CSFi mg/(kg-day) $^{-1}$ = IUR (mg/m^3) x 20m ^{3}/day x 1/70kg x 1000 (EPA 1994)

70 [14] Soil to Groundwater Cleanup values are based on the MTCA Cleanup Regulation Fixed Parameter three-phase partitioning model (WAC 173-340-747; Equation 747-1).

71 [15] H = Environmental Criteria and Assessment Office; I = IRIS; M = ATSDR MRL (CHRONIC) ; P = EPA Provisional Peer Reviewed Toxicity Value; Cal =CalEPA; A = ATSDR ; Hcc = Henry's Law constant (unitless).

72

73 Reference

74 1) EPA 2008. EPA Regional Screening Tables May 2010 Update.

75 2) U. S. Environmental Protection Agency, Region 10 Letter From Michael W. Cox, Unit Manager, Risk Evaluation Unit, Office of Environmental Assessment (OEA-095) To Martha Hankins, Acting Unit Supervisor, Policy and Technical Support Unit.

76 Toxics Cleanup Program, Department of Ecology, Re: Office of Environmental Assessment recommendations for evaluating trichloroethylene in human health risk assessment, October 22, 2008.

77 3) Marcia Bailey's Memo to Debbie Yamamoto regarding Region 10 soil screening level for TCE (March 13, 2009).

78

Table 8. TMCLs for Volatile Organic Chemicals and Total Petroleum Hydrocarbons in Groundwater at the Boeing Plant 2 Facility

CAS Number	Chemicals	Tap water ug/L	MCL (ug/L)	NTR [3] FW chronic Criteria Eco (ug/L)	NTR [3] Marine chronic Criteria Eco (ug/L)	NTR [4] HH Criteria Organism only (ug/L)	WAC 173 -201 A [6] FW chronic Criteria Eco (ug/L)	WAC 173 -201 A [6] Marine chronic Criteria Eco (ug/L)	EPA AWQCs [7] FW chronic Criteria Eco (ug/L)	EPA AWQCs [7] HH Criteria Organism only (ug/L)	EPA AWQCs [7] Marine chronic Criteria Eco (ug/L)	BCF [8] Fish (L/kg FW)	SW CUL [9] w/salmon Fish Ingestion Tribal adult (ug/L) Cancer	SW CUL [9] w/salmon Fish Ingestion Tribal adult (ug/L) Noncancer	SW CUL [9] w/salmon Fish Ingestion Tribal child (ug/L) Cancer	SW CUL [9] w/salmon Fish Ingestion Tribal child (ug/L) Noncancer	SW CUL [9] w/o salmon Fish Ingestion Tribal adult (ug/L) Cancer	SW CUL [9] w/o salmon Fish Ingestion Tribal adult (ug/L) Noncancer	SW CUL [9] w/o salmon Fish Ingestion Tribal child (ug/L) Cancer	SW CUL [9] w/o salmon Fish Ingestion Tribal child (ug/L) Noncancer	SW CUL [10] w/o salmon Fish Ingestion API adult (ug/L) Cancer	SW CUL [10] w/o salmon Fish Ingestion API adult (ug/L) Noncancer	SW CUL [10] w/o salmon Fish Ingestion API child (ug/L) Cancer	SW CUL [10] w/o salmon Fish Ingestion API child (ug/L) Noncancer	SW CUL [10] w/salmon Fish Ingestion API adult (ug/L) Cancer	SW CUL [10] w/salmon Fish Ingestion API adult (ug/L) Noncancer	SW CUL [10] w/salmon Fish Ingestion API child (ug/L) Cancer	SW CUL [10] w/salmon Fish Ingestion API child (ug/L) Noncancer	MTCA SW [11] Method B CUL Fish Ingestion (ug/L) Cancer	MTCA SW [11] Method B CUL Fish Ingestion (ug/L) Noncancer	MTCA SW [12] Method B Adjusted Fish Ingestion (ug/L) Cancer	MTCA SW [12] Method B Adjusted Fish Ingestion (ug/L) Noncancer	RfD_{oral} (mg/kg-d)	Source	CSF_{oral} (mg/kg-d)$^{-1}$	Source	CSF_{oral} (Adult) (mg/kg-d)$^{-1}$	Source	GW CUL (ug/L)	Basis
	Volatile Organic Compounds																																						
67-64-1	Acetone	2.2E+04	-	-	-	-	-	-	-	-	-	3.2E+00	-	1.2E+05	-	5.5E+04	-	2.4E+05	-	1.1E+05	-	3.1E+05	-	1.9E+05	-	3.1E+05	-	1.9E+05	-	7.4E+05	-	3.1E+05	9.0E-01	I	-	-	-	-	1.1E+05	Tribal Child
71-43-2	Benzene	4.1E-01	5.0E+00	-	-	7.1E+01	-	-	-	5.1E+01	-	8.3E+00	1.0E+00	2.0E+02	5.0E+00	9.4E+01	2.0E+00	4.1E+02	9.5E+00	1.9E+02	7.1E+00	2.3E+02	1.7E+01	3.2E+02	7.1E+00	5.3E+02	1.7E+01	3.2E+02	1.4E+01	1.3E+03	6.1E+00	5.4E+02	4.0E-03	I	5.5E-02	-	-	-	2.0E+00	Tribal Adult
75-27-4	Bromodichloromethane	1.2E-01	8.0E+01	-	-	2.2E+01	-	-	-	1.7E+01	-	8.3E+00	9.0E-01	1.0E+03	4.4E+00	4.7E+02	1.8E+00	2.0E+03	8.8E+00	9.4E+02	6.3E+00	6.3E+00	2.7E+03	1.5E+01	1.6E+03	2.7E+03	1.5E+01	1.6E+03	1.3E+01	6.3E+03	5.4E+00	2.7E+03	2.0E-02	I	6.2E-02	I	-	-	1.8E+00	Tribal Adult
78-93-3	2-Butanone (MEK)	7.1E+03	-	-	-	-	-	-	-	-	-	3.2E+00	-	8.0E+04	-	3.7E+04	-	1.6E+05	-	7.3E+04	-	2.1E+05	-	1.2E+05	-	2.1E+05	-	1.2E+05	-	4.9E+05	-	2.1E+05	6.0E-01	I	-	-	-	-	7.3E+04	Tribal Child
104-51-8	n-butylbenzene	-	-	-	-	-	-	-	-	-	-	-	-	-	-	-	-	-	-	-	-	-	-	-	-	-	-	-	-	-	-	-	-	-	-	-	-	-	-
135-98-8	sec-butylbenzene	-	-	-	-	-	-	-	-	-	-	-	-	-	-	-	-	-	-	-	-	-	-	-	-	-	-	-	-	-	-	-	-	-	-	-	-	-	-
75-15-0	Carbon disulfide	1.0E+03	-	-	-	-	-	-	-	-	-	9.9E+00	-	4.3E+03	-	2.0E+03	-	8.5E+03	-	3.9E+03	-	1.1E+04	-	6.6E+03	-	1.1E+04	-	6.6E+03	-	2.6E+04	-	1.1E+04	1.0E-01	I	-	-	-	-	3.9E+03	Tribal Child
56-23-5	Carbon Tetrachloride	2.0E-01	5.0E+00	-	-	4.4E+00	-	-	-	1.6E+00	-	2.9E+01	1.2E-01	5.9E+01	6.1E-01	2.7E+01	2.5E-01	5.1E+02	1.2E+00	5.4E+01	8.7E-01	1.5E+02	2.0E+00	9.1E+01	8.6E-01	1.5E+02	2.0E+00	9.1E+01	1.7E+00	3.6E+02	7.4E-01	1.5E+02	4.0E-03	I	1.3E-01	I	-	-	2.5E-01	Tribal Adult
108-90-7	Chlorobenzene	9.1E+01	1.0E+02	-	1.3E+02	2.1E+04	-	-	-	1.6E+03	-	2.9E+01	-	2.9E+02	-	1.4E+02	-	5.9E+02	-	2.7E+02	-	7.7E+02	-	4.6E+02	-	7.7E+02	-	4.6E+02	-	1.8E+03	-	7.7E+02	2.0E-02	I	-	-	-	-	2.7E+02	Tribal Child
75-00-3	Chloroethane (Ethyl Chloride)	2.1E+04	-	-	-	-	-	-	-	-	-	2.4E+00	-	-	-	-	-	-	-	-	-	-	-	-	-	-	-	-	-	-	-	-	-	-	-	-	-	-	2.1E+04	Tap water
110-75-8	2-chloroethylvinylether	-	-	-	-	-	-	-	-	-	-	-	-	-	-	-	-	-	-	-	-	-	-	-	-	-	-	-	-	-	-	-	-	-	-	-	-	-	-
74-87-3	Chloromethane (Methyl Chloride)	1.9E+02	-	-	-	-	-	-	-	-	-	3.2E+00	-	-	-	-	-	-	-	-	-	-	-	-	-	-	-	-	-	-	-	-	-	-	-	-	-	-	1.9E+02	Tap water
67-66-3	Chloroform	1.9E-01	-	-	5.7E+00	4.7E+02	-	-	-	4.7E+02	-	6.9E+00	2.1E+00	6.1E+02	1.1E+01	2.8E+02	4.3E+00	1.2E+03	2.1E+01	5.6E+02	1.5E+01	1.6E+03	3.5E+01	9.4E+02	1.5E+01	1.6E+03	3.5E+01	9.4E+02	3.0E+01	3.7E+03	1.3E+01	1.6E+03	1.0E-02	I	3.1E-02	Cal	-	-	4.3E+00	Tribal Adult
95-50-1	1,2-dichlorobenzene	3.7E+02	6.0E+02	-	2.7E+03	1.7E+04	-	-	-	1.3E+03	-	8.0E+01	-	4.7E+02	-	2.2E+02	-	9.5E+02	-	4.4E+02	-	1.2E+03	-	7.3E+02	-	1.2E+03	-	7.3E+02	-	2.9E+03	-	1.2E+03	9.0E-02	I	-	-	-	-	4.4E+02	Tribal Child
75-34-3	1,1-dichloroethane	2.4E+00	-	-	-	-	-	-	-	-	-	4.9E+00	1.7E+01	1.7E+04	8.1E+01	8.0E+03	3.3E+01	3.5E+04	1.6E+02	1.6E+04	1.2E+02	4.5E+04	2.7E+02	2.7E+04	1.2E+02	4.5E+04	2.7E+02	2.7E+04	-	1.1E+05	1.0E+02	4.5E+04	2.0E-01	P	5.7E-03	Cal	-	-	3.3E+01	Tribal Adult
107-06-2	1,2-dichloroethane	1.5E-01	5.0E+00	-	-	3.8E-01	-	-	-	3.7E+01	-	2.9E+00	1.8E+00	3.0E+03	8.7E+00	1.4E+03	3.6E+00	5.9E+03	1.7E+01	2.7E+03	1.2E+01	7.7E+03	2.9E+01	4.6E+03	1.2E+01	7.7E+03	2.9E+01	4.6E+03	2.5E+01	1.8E+04	1.1E+01	7.8E+03	2.0E-02	P	9.1E-02	I	-	-	3.6E+00	Tribal Adult
75-35-4	1,1-dichloroethene	3.4E+02	7.0E+00	-	-	5.7E+02	-	-	-	7.1E+03	-	8.3E+00	-	2.6E+03	-	1.2E+03	-	5.1E+03	-	2.3E+03	-	6.7E+03	-	3.9E+03	-	6.7E+03	-	3.9E+03	-	1.6E+04	-	6.7E+03	5.0E-02	I	-	-	-	-	2.3E+03	Tribal Child
156-59-2	cis-1,2-dichloroethene	3.7E+02	7.0E+01	-	-	-	-	-	-	-	-	5.8E+00	-	7.3E+02	-	3.3E+02	-	1.5E+03	-	6.7E+02	-	1.9E+03	-	1.1E+03	-	1.9E+03	-	1.1E+03	-	4.5E+03	-	1.9E+03	1.0E-02	P	-	-	-	-	6.7E+02	Tribal Child
156-60-5	trans-1,2-dichloroethene	1.1E+02	1.0E+02	-	-	-	-	-	-	1.0E+04	-	8.3E+00	-	1.0E+03	-	4.7E+02	-	2.0E+03	-	9.4E+02	-	2.7E+03	-	1.6E+03	-	2.7E+03	-	1.6E+03	-	6.3E+03	-	2.7E+03	2.0E-02	I	-	-	-	-	9.4E+02	Tribal Child
100-41-4	Ethylbenzene	1.5E+02	7.0E+02	-	-	2.9E+04	-	-	-	2.1E+03	-	4.9E+01	-	8.7E+02	-	4.0E+02	-	1.7E+03	-	8.0E+02	-	2.3E+03	-	1.3E+03	-	2.3E+03	-	1.3E+03	-	5.3E+03	-	2.3E+03	1.0E-01	I	1.1E-02	Cal	-	-	8.0E+02	Tribal Child
98-82-8	Isopropylbenzene(cumene)	6.8E+02	-	-	-	-	-	-	-	-	-	1.4E+02	-	3.0E+02	-	1.4E+02	-	6.0E+02	-	2.7E+02	-	7.8E+02	-	4.6E+02	-	7.8E+02	-	4.6E+02	-	1.8E+03	-	7.8E+02	1.0E-01	I	-	-	-	-	2.7E+02	Tribal Child
99-87-6	4-isopropyltoluene	-	-	-	-	-	-	-	-	-	-	-	-	-	-	-	-	-	-	-	-	-	-	-	-	-	-	-	-	-	-	-	-	-	-	-	-	-	-
75-09-2	Methylene Chloride	4.8E+00	5.0E+00	-	-	1.6E+03	-	-	-	5.9E+02	-	2.0E+00	3.1E+01	1.3E+04	1.5E+02	5.8E+03	6.1E+01	2.5E+04	3.0E+02	1.2E+04	2.1E+02	3.3E+04	5.1E+02	2.0E+04	2.1E+02	3.3E+04	5.1E+02	2.0E+04	4.3E+02	7.8E+04	1.8E+02	3.3E+04	6.0E-02	I	7.5E-03	-	-	-	6.1E+01	Tribal Adult
103-65-1	n-propylbenzene	1.3E+03	-	-	-	-	-	-	-	-	-	-	-	-	-	-	-	-	-	-	-	-	-	-	-	-	-	-	-	-	-	-	1.0E-01	P	-	-	-	-	1.3E+03	Tap water
79-34-5	1,1,2,2-tetrachloroethane	6.7E-02	-	-	-	1.1E+01	-	-	-	4.0E+00	-	1.4E+01	1.6E-01	1.2E+02	8.0E-01	5.5E+01	3.3E-01	2.4E+02	1.6E+00	1.1E+02	1.1E+00	3.1E+02	2.7E+00	1.9E+02	1.1E+00	3.1E+02	2.7E+00	1.9E+02	2.3E+00	7.4E+02	9.8E-01	3.1E+02	4.0E-03	P	2.0E-01	I	-	-	3.3E-01	Tribal Adult
127-18-4	Tetrachloroethene	2.0E-01	5.0E+00	-	-	8.9E+00	-	-	-	3.3E+00	-	3.3E+00	1.0E-02	5.1E+01	5.0E-02	2.3E+01	2.1E-02	1.0E+02	1.0E-01	4.7E+01	7.2E-02	1.3E+02	1.7E-01	7.9E+01	7.2E-02	1.3E+02	1.7E-01	7.9E+01	1.4E-01	3.1E+02	6.2E-02	1.3E+02	1.0E-02	I	5.4E-01	Cal	-	-	2.1E-02	Tribal Adult
108-88-3	Toluene	2.3E+03	1.0E+03	-	-	2.0E+05	-	-	-	1.5E+04	-	2.4E+01	-	1.4E+03	-	6.5E+02	-	2.8E+03	-	1.3E+03	-	3.7E+03	-	2.2E+03	-	3.7E+03	-	2.2E+03	-	8.7E+03	-	3.7E+03	8.0E-02	I	-	-	-	-	1.3E+03	Tribal Child
71-55-6	1,1,1-trichloroethane	9.1E+03	2.0E+02	-	-	-	-	-	-	-	-	1.7E+01	-	5.0E+04	-	2.3E+04	-	1.0E+05	-	4.6E+04	-	1.3E+05	-	7.8E+04	-	1.3E+05	-	7.8E+04	-	3.1E+05	-	1.3E+05	2.0E+00	E	-	-	-	-	4.6E+04	Tribal Child
79-00-5	1,1,2-trichloroethane	2.4E-01	5.0E+00	-	-	4.2E+01	-	-	-	1.6E+01	-	6.9E+00	1.2E+00	2.4E+02	5.7E+00	1.1E+02	2.3E+00	4.9E+02	1.1E+01	2.2E+02	8.2E-01	6.4E+02	1.9E+01	3.8E+02	8.1E+00	6.4E+02	1.9E+01	3.8E+02	1.6E+01	1.5E+03	7.0E+00	6.4E+02	4.0E-03	I	5.7E-02	I	-	-	2.3E+00	Tribal Adult
79-01-6	Trichloroethylene [1]	2.8E+00	5.0E+00	-	-	8.1E+01	-	-	-	3.0E+01	-	1.4E+01	3.7E-01	-	1.8E+00	-	7.4E-01	-	3.6E+00	-	-	2.6E+00	-	6.1E+00	-	6.1E+00	-	2.6E+00	-	5.2E+00	-	2.2E+00	-	-	8.9E-02	R-10	-	-	7.4E-01	Tribal Adult
120-82-1	1,2,4-trichlorobenzene	2.3E+00	7.0E+01	-	-	-	-	-	-	7.0E+01	-	2.4E+02	-	1.8E+01	-	8.1E+00	-	3.5E+01	-	1.6E+01	-	4.6E+01	-	2.7E+01	-	4.6E+01	-	2.7E+01	-	1.1E+02	-	4.6E+01	1.0E-02	I	2.9E-02	P	-	-	1.6E+01	Tribal Child
75-69-4	Trichlorofluoromethane	1.3E+03	-	-	-	-	-	-	-	-	-	1.7E+01	-	7.5E+03	-	3.5E+03	-	1.5E+04	-	6.9E+03	-	2.0E+04	-	1.2E+04	-	2.0E+04	-	1.2E+04	-	4.8E+04	-	2.0E+04	3.0E-01	I	-	-	-	-	6.9E+03	Tribal Child
76-13-1	1,2,2-trichloro-1,1,2-trifluoroethane	5.9E+04	-	-	-	-	-	-	-	-	-	-	-	-	-	-	-	-	-	-	-	-	-	-	-	-	-	-	-	-	-	-	3.0E-01	I	-	-	-	-	-	
95-63-6	1,2,4-trimethylbenzene	1.5E+01	-	-	-	-	-	-	-	-	-	-	-	-	-	-	-	-	-	-	-	-	-	-	-	-	-	-	-	-	-	-	-	-	-	-	-	-	1.5E+01	Tap water
108-67-8	1,3,5-trimethylbenzene	3.7E+02	-	-	-	-	-	-	-	-	-	8.6E+01	-	4.9E+01	-	2.3E+01	-	9.8E+01	-	4.5E+01	-	1.3E+02	-	7.6E+01	-	1.3E+02	-	7.6E+01	-	3.0E+02	-	1.3E+02	1.0E-02	P	-	-	-	-	4.5E+01	Tribal Child
75-01-4	Vinyl chloride [2]	1.6E-02	2.0E+00	-	-	5.3E+02	-	-	-	2.4E+00	-	2.4E+00	2.7E-01	5.3E+02	6.3E-01	2.4E+02	5.3E-01	1.1E+03	1.3E+00	4.8E+02	1.9E+00	1.4E+03	2.1E+00	8.2E+02	1.9E+00	1.4E+03	2.1E+00	8.2E+02	1.8E+00	3.2E+03	7.7E-01	1.4E+03	3.0E-03	I	1.5E+00	I	7.2E-01	I	2.4E+00	EPA AWQC (ingestion of organism only)
108-38-3	m-Xylene	1.2E+03	-	-	-	-	-	-	-	-	-	5.8E+01	-	1.5E+03	-	6.7E+02	-	2.9E+03	-	1.3E+03	-	3.8E+03	-	2.2E+03	-	3.8E+03	-	2.2E+03	-	8.9E+03	-	3.8E+03	2.0E-01	I	-	-	-	-	1.3E+03	Tribal Child
95-47-6	o-Xylene	1.2E+03	-	-	-	-	-	-	-	-	-	4.9E+01	-	1.7E+03	-	7.9E+02	-	3.4E+03	-	1.6E+03	-	4.5E+03	-	2.7E+03	-	4.5E+03	-	2.7E+03	-	1.1E+04	-	4.5E+03	2.0E-01	I	-	-	-	-	1.6E+03	Tribal Child
106-42-3	p-Xylene	1.2E+03	-	-	-	-	-	-	-	-	-	4.9E+01	-	1.7E+03	-	8.0E+02	-	3.5E+03	-	1.6E+03	-	4.5E+03	-	2.7E+03	-	4.5E+03	-	2.7E+03	-	1.1E+04	-	4.5E+03	2.0E-01	I	-	-	-	-	1.6E+03	Tribal Child
10330-20-7	Total Xylenes	2.0E+02	1.0E+04	-	-	-	-	-	-	-	-	4.9E+01	-	1.7E+03	-	7.9E+02	-	3.4E+03	-	1.6E+03	-	4.5E+03	-	2.7E+03	-	4.5E+03	-	2.7E+03	-	1.1E+04	-	4.5E+03	2.0E-01	I	-	-	-	-	1.6E+03	Tribal Child
	Petroleum Hydrocarbons																																						
-	TPH-Gasoline Range	-	-	-	-	-	-	-	-	-	-	-	-	-	-	-	-	-	-	-	-	-	-	-	-	-	-	-	-	-	-	-	-	-	-	-	-	-	**5.0E+02**	MTCA Method A Groundwater Cleanup Levels [WAC 173-340-900]
-	TPH-Diesel Range	-	-	-	-	-	-	-	-	-	-	-	-	-	-	-	-	-	-	-	-	-	-	-	-	-	-	-	-	-	-	-	-	-	-	-	-	-	**5.0E+02**	MTCA Method A Groundwater Cleanup Levels [WAC 173-340-900]
-	TPH-Oil Range	-	-	-	-	-	-	-	-	-	-	-	-	-	-	-	-	-	-	-	-	-	-	-	-	-	-	-	-	-	-	-	-	-	-	-	-	-	**5.0E+02**	MTCA Method A Groundwater Cleanup Levels [WAC 173-340-900]

[1] EPA Region 10 adjusted Oral cancer slope factor to 0.089 (mg/kg-day) for TCE.
[2] Groundwater TMCL will be based on 2.4 ug/L (EPA AWQC ingestion of organism only) because of no evidence that vinyl chloride accumulates in fish tissue.
[3] Based on - chronic Aquatic life – National Toxics Rule (NTR), 40 CFR 131.36
[4] Based on - Human Health – National Toxics Rule (NTR), 40 CFR 131.36
[5] CWA = Clean Water Act (Section 304)
[6] WAC 173-201A (Washington Surface Water Standards).
[7] EPA Ambient Water Quality Criteria (AWQCs)
[8] Meylan, et al. (1999). In EPA Human Health Risk Assessment Protocol for Hazardous Waste Combustion Facilities (HHRAP) Guidance (2005) [EPA520-R05-008]
[9] Standard MTCA Method B Surface Water Cleanup Levels Equations 730 -1 & 730-2 were used but were modified by applying Tribal fish ingestion rates, body weights and exposure durations.
[10] Standard MTCA Method B Surface Water Cleanup Levels Equations 730 -1 & 730-2 but modified to include API fish Ingestion rates, body weights and exposure durations.
[11] Based on Standard MTCA Method B and Equations 730 -1 & 730-2
[12] Based on Standard MTCA Method B and Equations 730 -1 & 730-2 but modified to include API fish Ingestion rates, body weights and fish diet fraction.

Blank Cells (-) No data available
E = Environmental Criteria and Assessment Office
M = ATSDR MRL (CHRONIC) Cal =CalEPA
P = EPA Provisional Peer Reviewed Toxicity Value
R-10 = EPA Region adjusted value
I = IRIS

Table 16. Surface Water Protection Equations and Input Parameters

Equation # 1 (MTCA B Equation 730-1):
GW CULs based on discharge to SW and ingestion of carcinogenic contaminants in fish/shellfish:

$$\text{Groundwater Cleanup Level (ug/L)} = \frac{TR \times BW \times AT \times UCF1 \times UCF2}{SF_o \times BCF \times FCR \times FDF \times ED_l}$$

Where:
TR = Target risk (unitless)
BW = Body wt. (kg)
AT = Averaging time (yrs)
SF_o = Oral cancer slope factor (per mg/kg-day)
FDF = Fraction of fish in diet assumed to be affected by site contaminants (unitless)
ED = Exposure duration (yrs)
FCR = Fish Consumption Rate (g/day)
UCF1 = Unit Conversion Factor (g/mg)
UCF2 = Unit Conversion Factor (g/L)
BCF = Bioconcentration Factor[chemical specific](L/kg)

Equation # 2 (MTCA B Equation 730-2):
GW CULs based on discharge to SW and ingestion of noncarcinogenic contaminants in fish/shellfish:

$$\text{Groundwater Cleanup Level (ug/L)} = \frac{RfD \times BW \times UCF1 \times UCF2 \times THQ \times AT}{BCF \times FCR \times FDF \times ED}$$

Where:
THQ = Target Hazard Quotient
BW = Body wt. (kg)
AT = Averaging time (yrs)
RfD = Oral reference dose (mg/kg/day)
BCF = Bioconcentration Factor[chemical specific](L/kg)
ED = Exposure Duration (yrs)
FCR= Fish Consumption Rate (g/day)
FDF = Fraction of fish in diet assumed to be affected by site contaminants (unitless)
UCF1 = Unit Conversion Factor (g/mg)
UCF2 = Unit Conversion Factor (g/L)

		Fish Consumption Parameters						Ecology-modified		
		Tribes [1]		API [2]		MTCA B [3]		MTCA B[4]		Units
BW	adult	81.8		63		70		63		kg
	child	15		15		n/a		n/a		kg
		w/ Salmon		w/ Salmon						
FIR	adult	194		57.3		54		57		g/day
	child	77.6		23		n/a		n/a		g/day
		w/o Salmon		w/o Salmon						
FIR	adult	97.1		57.1		-		-		g/day
	child	38.8		23		-		-		g/day
CF1		1000		1000		1000		1000		ug/mg
CF2		1000		1000		1000		1000		g/L
BCF		chemical-specific								L/kg
TR		1.0E-06		1.E-06		1.E-06		1.E-06		unitless
THQ		1		1		1		1		unitless
FDF		1		1		0.5		1		unitless
		Cancer	Noncancer	Cancer	Noncancer	Cancer	Noncancer	Cancer	Noncancer	
AT	adult	70	64	70	24	75	30	75	30	years
	child	70	6	70	6	n/a	n/a	n/a	n/a	years
		Cancer	Noncancer	Cancer	Noncancer	Cancer	Noncancer	Cancer	Noncancer	
ED	adult	64	64	24	24	30	30	30	30	years
	child	6	6	6	6	n/a	n/a	n/a	n/a	years

[1] U.S. EPA Region 10. 2007. Framework for Selecting and Using Tribal Fish and Shellfish Consumption Rates for Risk-based Decision Making atg CERCLA and RCRA Sites in Puget Sound and the Strait of Georgia. March.
[2] Based on 1) Sechena, R.C. et al. 1999. Asian American and Pacific Islander Seafood Consumption Study in King County, Washington (EPA 910-/R-99-003); and
2) Kissinger, Lon. 2005. Application of Data from an Asian and Pacific Islander (API) Seafood Consumption Study to Dervie Fish and Shellfish Consumption Rates for Environmental Risk Assessment. EPA Region 10 Office of Environmental Assessment.
[3] MTCA Cleanup Regulations (WAC 173-340-730).
[4] In a December 2005 memo signed by Pete Kmet, Ecology approved use of an API scenario for Eqs 730-1 and 730-2 that assumes a consumption rate of 57 g/d, BW of 63 g, and diet fraction of 1.0, for MTCA sites in the areas of the Duwamish River and Elliott Bay. It does not specify whether it includes or excludes salmon, as the rates as virtually the same for the API scenario.

Table F3

Constituent	CAS	Chemical Classification	ABS (unitless)	RFDo 1 (mg/kg-day)	RFDd (mg/kg-day)	GI (unitless)	CPFo 1 (kg-day/mg)	CPFd (kg-day/mg)	NC SSL (µg/kg)	CSSL (µg/kg)	SSL (µg/kg)	Comment /Sources
Volatile Organic Compounds												
Chlorinated Ethenes and Ethanes												
Vinyl chloride	75-01-4	Carcinogen	5.0E-04	3.0E-03	3.0E-03	1.0E+00	1.5E+00	1.5E+00	7.8E+07	1.3E+07	1.3E+07	
Chloroethane	75-00-3	Carcinogen	5.0E-04	4.0E-01	4.0E-01	1.0E+00	2.9E-03	2.9E-03	1.0E+10	6.7E+09	6.7E+09	
1,1-Dichloroethane	75-34-3	~~Non~~-carcinogen	5.0E-04	2.0E-01	2.0E-01	1.0E+00	5.7E-03		5.2E+09		5.2E+09	CalEPA
1,2-Dichloroethane	107-06-2	Carcinogen	3.0E-02	2.0E-02	2.0E-02	1.0E+00	9.1E-02	9.1E-02	4.9E+08	2.0E+08	2.0E+08	
1,1-Dichloroethene	75-35-4	Non-carcinogen	5.0E-04	5.0E-02	5.0E-02	1.0E+00			1.3E+09		1.3E+09	
trans-1,2-Dichloroethene	156-60-5	Non-carcinogen	5.0E-04	2.0E-02	2.0E-02	1.0E+00			5.2E+08		5.2E+08	
cis-1,2-Dichloroethene	156-59-2	Non-carcinogen	5.0E-04	1.0E-02	1.0E-02	1.0E+00			2.6E+08		2.6E+08	
1,2-Dichloroethene (total)	540-59-0	Non-carcinogen	5.0E-04	9.0E-03	9.0E-03	1.0E+00			2.3E+08		2.3E+08	
1,1,1-Trichloroethane	71-55-6	Non-carcinogen	5.0E-04	~~9.0E-01~~ (2.0E+00)	9.0E-01	1.0E+00			2.3E+10		2.3E+10	EPA IRIS
Trichloroethene	79-01-6	Carcinogen	3.0E-02	3.0E-04	3.0E-04	1.0E+00	~~8.9E-02~~ (1.3E-02)	8.9E-02	7.3E+06	2.1E+08	2.1E+08	CalEPA
1,1,2-Trichloroethane	79-00-5	Carcinogen	3.0E-02	4.0E-03	4.0E-03	1.0E+00	5.7E-02	5.7E-02	9.7E+07	3.2E+08	3.2E+08	
1,1,2,2-Tetrachloroethane	79-34-5	Carcinogen	3.0E-02	4.0E-03	0.0E+00	1.0E+00	2.0E-01	2.0E-01		9.1E+07	9.1E+07	
Tetrachloroethene	127-18-4	Carcinogen	3.0E-02	1.0E-02	1.0E-02	1.0E+00	5.4E-01	5.4E-01	2.4E+08	3.4E+07	3.4E+07	
Other Halogenated Volatile Organic Compounds												
Methylene chloride	75-09-2	Carcinogen	5.0E-04	6.0E-02	6.0E-02	1.0E+00	7.5E-03	7.5E-03	1.6E+09	2.6E+09	2.6E+09	
Chloromethane	74-87-3	Carcinogen	5.0E-04		0.0E+00	1.0E+00	1.3E-02	1.3E-02		1.5E+09	1.5E+09	RfC = 9.0E-02; IRIS
Chlorobenzene	108-90-7	Non-carcinogen	3.0E-02	2.0E-02	2.0E-02	1.0E+00			4.9E+08		4.9E+08	
1,2-Dichloropropane	78-87-5	Carcinogen	3.0E-02			1.0E+00	~~6.8E-02~~ (3.6 E-02)	6.8E-02		2.7E+08	2.7E+08	CalEPA
Chloroform	67-66-3	Carcinogen	5.0E-04	1.0E-02	1.0E-02	1.0E+00	~~6.1E-03~~ (3.1 E-02)	6.1E-03	2.6E+08	3.2E+09	3.2E+09	CalEPA
4-Chlorotoluene	106-43-4	Non-carcinogen	5.0E-04	7.0E-02		1.0E+00	ND				ND	
Trichlorofluoromethane	75-69-4	Non-carcinogen	5.0E-04	3.0E-01	3.0E-01	1.0E+00			7.8E+09		7.8E+09	
Methyl Iodide	74-88-4	Non-carcinogen	3.0E-02	ND		1.0E+00	ND				ND	
4-Chloro-3-methylphenol	59-50-7	Non-carcinogen		ND		1.0E+00	ND				ND	
1,3-Dichlorobenzene	541-73-1	Non-carcinogen		ND		1.0E+00	ND				ND	
1,4-Dichlorobenzene	106-46-7	Carcinogen	3.0E-02	7.0E-02		1.0E+00	~~2.4E-02~~ (5.4 E-03)	2.4E-02		7.6E+08	7.6E+08	CalEPA/ATSDR
1,2-Dichlorobenzene	95-50-1	Non-carcinogen	3.0E-02	9.0E-02	9.0E-02	1.0E+00			2.2E+09		2.2E+09	
Carbon tetrachloride	56-23-5	Carcinogen	5.0E-04	7.0E-04	7.0E-04	1.0E+00	1.3E-01	1.3E-01	1.8E+07	1.5E+08	1.5E+08	
2-Chloronapthalene	91-58-7	Non-carcinogen	5.0E-04	8.0E-02	8.0E-02	1.0E+00			2.1E+09		2.1E+09	
Bromodichloromethane	75-27-4	Carcinogen	5.0E-04	2.0E-02	2.0E-02	1.0E+00	6.2E-02	6.2E-02	5.2E+08	3.1E+08	3.1E+08	
1,2,4-Trichlorobenzene	120-82-1	~~Non~~-carcinogen	5.0E-04	1.0E-02	1.0E-02	1.0E+00	3.6 E-03		2.6E+08		2.6E+08	CalEPA
1,1,2-Trichlorotrifluoroethane	76-13-1	Non-carcinogen	5.0E-04	3.0E+01	3.0E+01	1.0E+00			7.8E+11		7.8E+11	
Hexachlorobutadiene	87-68-3	Carcinogen	5.0E-04	~~2.0E-04~~ (1.0E-03)	2.0E-04	1.0E+00	7.8E-02	7.8E-02	5.2E+06	2.5E+08	2.5E+08	PPRTV
Ketones												
Acetone	67-64-1	Non-carcinogen	5.0E-04	1.0E-01	1.0E-01	1.0E+00			2.6E+09		2.6E+09	
2-Butanone	78-93-3	Non-carcinogen	5.0E-04	6.0E-01	6.0E-01	1.0E+00			1.6E+10		1.6E+10	
2-Hexanone	591-78-6	Non-carcinogen		ND			ND				ND	
Methyl isobutyl ketone	108-10-1	Non-carcinogen	3.0E-02	8.0E-02	8.0E-02	1.0E+00			1.9E+09		1.9E+09	
Other Volatile Organic Compounds												
Carbon disulfide	75-15-0	Non-carcinogen	5.0E-04	1.0E-01	1.0E-01	1.0E+00			2.6E+09		2.6E+09	
Total Petroleum Hydrocarbons and TPH-associated Volatiles												
TPH-Gasoline range	86290-81-5	Non-carcinogen		ND		1.0E+00	ND				ND	
Benzene	71-43-2	Carcinogen	5.0E-04	4.0E-03	4.0E-03	1.0E+00	5.5E-02	5.5E-02	1.0E+08	3.5E+08	3.5E+08	
Toluene	108-88-3	Non-carcinogen	3.0E-02	8.0E-02	8.0E-02	1.0E+00			1.9E+09		1.9E+09	
Styrene	100-42-5	Carcinogen	3.0E-02	2.0E-01	2.0E-01	1.0E+00	~~3.0E-02~~	3.0E-02	4.9E+09	6.1E+08	6.1E+08	RfC = 2.0E-01; IRIS
m,p-Xylene (m-xylene)	108-38-3	Non-carcinogen	3.0E-02	ND		1.0E+00	ND				ND	
o-Xylene	95-47-6	Non-carcinogen	3.0E-02	ND		1.0E+00	ND				ND	
Xylenes (total)	1330-20-7	Non-carcinogen	3.0E-02	2.0E-01	2.0E-01	1.0E+00			4.9E+09		4.9E+09	
Ethylbenzene	100-41-4	~~Non~~-carcinogen	3.0E-02	1.0E-01	1.0E-01	1.0E+00	1.1E-02		2.4E+09		2.4E+09	CalEPA
TPH Diesel range	63334-30-5	Non-carcinogen		ND		1.0E+00	ND				ND	
1,2,4-Trimethylbenzene	95-63-6	Non-carcinogen	1.0E-01	~~5.0E-02~~	5.0E-02	1.0E+00			1.1E+09		1.1E+09	RfC = 7.0E-03; PPRTV
1,3,5-Trimethylbenzene	108-67-8	Non-carcinogen	1.0E-01	5.0E-02	5.0E-02	1.0E+00			1.1E+09		1.1E+09	
4-Isopropyltoluene	99-87-6	Non-carcinogen		ND			ND				ND	
n-Propylbenzene	103-65-1	Non-carcinogen		ND			ND				ND	
Cumene / Isopropylbenzene	98-82-8	Non-carcinogen	1.0E-01	1.0E-01	1.0E-01	1.0E+00			2.1E+09		2.1E+09	
n-butylbenzene	104-51-8	Non-carcinogen		ND			ND				ND	
sec Butylbenzene	135-98-8	Non-carcinogen		ND			ND				ND	
tert-Butylbenzene	98-06-6	Non-carcinogen		ND		1.0E+00	ND				ND	
Semivolatile Organic Compounds												
Phenols, Benzoic Acid, and Carbozole												
Phenol	108-95-2	Non-carcinogen	1.0E-01	~~6.0 E-01~~ ; (3.0E-01)	6.0E-01	1.0E+00			1.3E+10		1.3E+10	EPA IRIS
2-Methylphenol	95-48-7	Non-carcinogen	1.0E-01	5.0E-02	5.0E-02	1.0E+00			1.1E+09		1.1E+09	
4-Methylphenol	106-44-5	Non-carcinogen	1.0E-01	5.0E-03	5.0E-03	1.0E+00			1.1E+08		1.1E+08	
2,4-Dimethylphenol	105-67-9	Non-carcinogen	1.0E-01	2.0E-02	2.0E-02	1.0E+00			4.3E+08		4.3E+08	
Benzoic Acid	65-85-0	Non-carcinogen	1.0E-01	4.0E+00	4.0E+00	1.0E+00			8.5E+10		8.5E+10	
Carbazole	86-74-8	Carcinogen	1.0E-01			1.0E+00	2.0E-02	2.0E-02		8.0E+08	8.0E+08	
Phthalates												
Di-n-butylphthalate	84-74-2	Non-carcinogen	1.0E-01	1.0E-01	1.0E-01	1.0E+00			2.1E+09		2.1E+09	
bis(2-Ethylhexyl)phthalate	117-81-7	Carcinogen	1.0E-01	2.0E-02	2.0E-02	1.0E+00	1.4E-02	1.4E-02	4.3E+08	1.1E+09	1.1E+09	
Diethylphthalate	84-66-2	Non-carcinogen	1.0E-01	8.0E-01	8.0E-01	1.0E+00			1.7E+10		1.7E+10	
Butylbenzylphthalate	85-68-7	~~Non~~-carcinogen	1.0E-01	2.0E-01	2.0E-01	1.0E+00	1.9E-03		4.3E+09		4.3E+09	EPA PPTRV
Di-n-octylphthalate	117-84-0	Non-carcinogen	1.0E-01	2.0E-02	2.0E-02	1.0E+00			4.3E+08		4.3E+08	
Carcinogenic Polycyclic Aromatic Hydrocarbons (cPAHs)												
Chrysene	218-01-9	Carcinogen	1.0E-01			5.0E-01	~~7.3E+00;~~ (7.3E-03)	1.0E+01		2.0E+06	2.0E+08	[WAC 173-340-702 (14), (15), (16)]; EPA IRIS
Benzo(a)anthracene	56-55-3	Carcinogen	1.0E-01			5.0E-01	~~7.3E+00~~; (7.3E-01)	1.0E+01		2.0E+06	2.0E+07	[WAC 173-340-702 (14), (15), (16)]; EPA IRIS
Benzo(a)pyrene 2	50-32-8	Carcinogen	1.0E-01			5.0E-01	7.3E+00	1.0E+01		1.7E+06	1.7E+06	
Benzo(b)fluoranthene	205-99-2	Carcinogen	1.0E-01			5.0E-01	~~7.3E+00~~; (7.3E-01)	1.0E+01		2.0E+06	2.0E+07	[WAC 173-340-702 (14), (15), (16)]; EPA IRIS
Benzo(k)fluoranthene	207-08-9	Carcinogen	1.0E-01			5.0E-01	~~7.3E+00~~; (7.3E-02)	1.0E+01		2.0E+06	2.0E+07	[WAC 173-340-702 (14), (15), (16)]; EPA RIS
Benxofluoranthenes(total)	56832-73-6		1.0E-01			5.0E-01						
Indeno(1,2,3-cd)pyrene	193-39-5	Carcinogen	1.0E-01			5.0E-01	~~7.3E+00~~; (7.3E-01)	1.0E+01		2.0E+06	2.0E+07	[WAC 173-340-702 (14), (15), (16)]; EPA IRIS
Dibenz(a,h)anthracene	53-70-3	Carcinogen	1.0E-01			5.0E-01	7.3E+00	1.0E+01		2.0E+06	2.0E+07	
Polycyclic Aromatic Hydrocarbons												
Naphthalene	91-20-3	~~Non~~-carcinogen	1.0E-01	2.0E-02	1.0E-02	5.0E-01			3.3E+08		3.3E+08	[WAC 173-340-702 (14), (15), (16)]; RfC = 3.0E-03-EPA IRIS
2-Methylnapthalene	91-57-6	Non-carcinogen	1.0E-01	4.0E-03	2.9E-03	5.0E-01			7.5E+07		7.5E+07	[WAC 173-340-702 (14), (15), (16)]
Acenaphthylene	208-96-8	Non-carcinogen		ND			ND				ND	[WAC 173-340-702 (14), (15), (16)]
Acenaphthene	83-32-9	Non-carcinogen	1.0E-01	6.0E-02	4.4E-02	5.0E-01			1.1E+09		1.1E+09	[WAC 173-340-702 (14), (15), (16)]
Anthracene	120-12-7	Non-carcinogen	1.0E-01	3.0E-01	2.2E-01	5.0E-01			5.6E+09		5.6E+09	[WAC 173-340-702 (14), (15), (16)]
Fluorine	86-73-7	Non-carcinogen	1.0E-01	4.0E-02	2.9E-02	5.0E-01			7.5E+08		7.5E+08	[WAC 173-340-702 (14), (15), (16)]
Phenanthrene	85-01-8	Non-carcinogen		ND			ND				ND	[WAC 173-340-702 (14), (15), (16)]
Fluoranthene	206-44-0	Non-carcinogen	1.0E-01	4.0E-02	2.9E-02	5.0E-01			7.5E+08		7.5E+08	[WAC 173-340-702 (14), (15), (16)]
Pyrene	129-00-0	Non-carcinogen	1.0E-01	3.0E-02	2.2E-02	5.0E-01			5.6E+08		5.6E+08	[WAC 173-340-702 (14), (15), (16)]
Benzo(g,h,i)perylene	191-24-2	Non-carcinogen		ND			ND				ND	[WAC 173-340-702 (14), (15), (16)]
Dibenzofuran	132-64-9	Non-carcinogen	1.0E-01	2.0E-03	1.5E-03	5.0E-01			3.7E+07		3.7E+07	[WAC 173-340-702 (14), (15), (16)]
Polychlorinated Biphenyls												
Total PCB	1336-36-3	Carcinogen	1.4E-01			8.8E-01	2.0E+00	2.3E+00		7.2E+06	7.2E+06	
Aroclor 1016/1242	53469-21-9	Non-carcinogen	1.4E-01	7.0E-05	6.2E-05	8.8E-01	7.0E-02		1.3E+06		1.3E+06	EPA IRIS
Aroclor 1248	12672-29-6	Non-carcinogen	1.4E-01	ND		8.8E-01	2.0E+00				ND	EPA IRIS
Aroclor 1254	11097-69-1	Non-carcinogen	1.4E-01	2.0E-05	1.8E-05	8.8E-01	2.0E+00		3.8E+05		3.8E+05	EPA IRIS
Aroclor 1260	11097-85-5	Non-carcinogen	1.4E-01		1.8E-05	8.8E-01	2.0E+00					
Metals												
Aluminum	7429-90-5	Non-carcinogen		1.0E+00								EPA PPTRV
Antimony	7440-36-0	Non-carcinogen		4.0E-04								
Arsenic	7440-38-2	Carcinogen		3.0E-04			1.5E+00					
Barium	7440-39-3	Non-carcinogen		2.0E-01								
Beryllium	7440-41-7	Non-carcinogen		2.0E-03								
Cadmium	7440-43-9	Non-carcinogen		1.0E-03								
Calcium	7440-70-2	Non-carcinogen										
Chromium	7440-47-3	Carcinogen										
Chromium (VI)	18540-29-9	Non-carcinogen		3.0E-03								EPA IRIS
Copper	7440-58-8	Non-carcinogen		4.0E-02								
Iron	7439-89-6	Non-carcinogen		7.0E-01								EPA PPTRV
Lead	7439-92-1	Non-carcinogen										
Magnesium	7439-95-4	Non-carcinogen										
Manganese	7439-96-5	Non-carcinogen		1.4E-01								
Mercury (mercuric chloride)	7487-94-7	Non-carcinogen		3.0E-04								EPA IRIS
Mercury (elemental)	7487-97-6	Non-carcinogen		1.6E-04								EPA IRIS
Molybdenum	7487-98-7	Non-carcinogen		5.0E-03								
Nickel	7440-02-0	Non-carcinogen		2.0E-02								
Potassium	7440097	Non-carcinogen										
Selenium	7782-49-2	Non-carcinogen		5.0E-03								
Silver	7440-22-4	Non-carcinogen		5.0E-03								
Sodium	7440-23-5	Non-carcinogen										
Thallium	7440-28-0	Non-carcinogen		6.5E-05								EPA IRIS
Vanadium	7440-62-2	Non-carcinogen		7.0E-03								
Zinc	7440-66-6	Non-carcinogen		3.0E-01								
Cyanide (free cyanide)	57-12-5	Non-carcinogen		2.0E-02								

Color Codes:

Revision needed

Correct toxicity values

Abbreviations:

ATSDR - Agency for Toxic Substances and Disease Registry

CalEPA - California Environmental Protection Agency

EPA PPRTV - EPA Provisional Peer Reviewed Toxicity Values

EPA IRIS - EPA Integrated Risk Information System

Table of Contents

Change page references and footer to reflect that this is now Attachment C

1.0 Introduction D-1

2.0 Evaluation Approach—Residential D-3

2.1 COC SCREENING METHODOLOGY D-3

2.2 EXPOSURE ASSUMPTIONS AND AIR SCREENING LEVELS—RESIDENTIAL D-4

3.0 Johnson and Ettinger Vapor Intrusion Modeling D-5

3.1 BUILDING CONSTRUCTION ASSUMPTIONS AND DEFAULT INPUT VALUES D-5

3.2 SITE-SPECIFIC SOIL PARAMETERS AND MODEL INPUT VALUES D-5

3.3 DEPTH TO SOIL AND GROUNDWATER CONTAMINATION ASSUMPTIONS D-6

4.0 Evaluation Results D-7

4.1 RESIDENTIAL SCENARIO D-7

4.2 INDUSTRIAL SCENARIO—ADDITIONAL COCS AND TCE D-7

5.0 References D-9

Deleted: /COMMERCIAL

List of Tables

Table D.1 J&E Model Results, Groundwater Screening Levels for Residential Exposure Scenario

Table D.2 J&E Model Results, Soil Screening Levels for Residential Exposure Scenario

Table D.3 J&E Model Results, Groundwater Screening Levels for Industrial Exposure Scenarios

Table D.4 J&E Model Results, Soil Screening Levels for Industrial Exposure Scenario

Deleted: /Commercial

Deleted: /Commercial

Example J&E Model Worksheets

Deleted: F:\projects\Boeing - Plant 2\JOB CMI Tech Work\TASk Uplands CMS Document\V2 TMCLs\Rev Agency Review Draft 2008\Attach D\TMCL Apx D 120208.doc

This page intentionally left blank.

Deleted: F:\projects\Boeing - Plant 2\JOB CMI Tech Work\TASk Uplands CMS Document\V2 TMCLs\Rev Agency Review Draft 2008\Attach D\TMCL Apx D 120208.doc

1.0 Introduction

This Attachment D presents the results of an evaluation to derive potential TMCL values in soil and groundwater for the protection of indoor air quality at the Boeing Plant 2 (Plant 2 or the facility) under a future residential construction scenario. The objective of this evaluation is to determine groundwater and soil concentrations in each of six areas of the facility that are protective of indoor air quality under an assumption of future residential redevelopment.

Vapor intrusion from the subsurface up through unsaturated soils and into enclosed spaces can result in potential exposure to elevated levels of volatile contaminants in breathing air. This attachment addresses the potential for volatile contaminants in both soil and groundwater to diffuse up through the unsaturated zone, and collect in a future residence constructed on the facility. Since no future residential development is currently planned for the facility, this evaluation was conducted under multiple assumptions regarding the detail of any future residential redevelopment. Screening values for both soil and groundwater developed in this evaluation are not appropriate for direct application to future construction. If residential redevelopment becomes an option for the Site, a building- and location-specific evaluation for vapor intrusion should be conducted. The assumptions in this evaluation regarding building construction, and location of subsurface contaminants, are intended to result in a health-protective scenario for potential vapor migration, as described in the following sections. For this evaluation, the COC concentrations in indoor air are calculated based on the Model Toxics Control Act (MTCA) Method B air cleanup level equations, using current EPA Regional Screening Levels (RSLs) with the exception of trichloroethylene, for which EPA Region 10-recommended values are used. Soil and groundwater concentrations intended to result in indoor air concentrations at or below the MTCA B concentrations using the EPA toxicity values described above were then calculated

Deleted: The conservative assumptions in this evaluation regarding building construction, and location of subsurface contaminants, result in a "worst-case" scenario for potential vapor migration, as described in the following sections. For this evaluation, the COC concentrations in indoor air were set equal to the Model Toxics Control Act (MTCA) Method B air standards for a residential scenario. These indoor air values were obtained from the Cleanup Levels and Risk Calculations (CLARC) tables. CLARC is a web-based compendium of technical information related to the calculation of cleanup levels under the MTCA Cleanup Regulation, Chapter 173-340 WAC. Soil and groundwater concentrations that would result in indoor air concentrations at or below the MTCA B levels were calculated.

This evaluation is being performed at the request of the U.S. Environmental Protection Agency (USEPA) under a Resource Conservation Recovery Act (RCRA) Order on Consent (RCRA Docket Number 1092-01-22-3008[h]).

Deleted: F:\projects\Boeing - Plant 2\JOB CMI Tech Work\TASk Uplands CMS Document\V2 TMCLs\Rev Agency Review Draft 2008\Attach D\TMCL Apx D 120208.doc

This page intentionally left blank.

Deleted: F:\projects\Boeing - Plant 2\JOB CMI Tech Work\TASk Uplands CMS Document\V2 TMCLs\Rev Agency Review Draft 2008\Attach D\TMCL Apx D 120208.doc

2.0 Evaluation Approach—Residential

The Johnson and Ettinger (J&E) Model approach involves using equations for estimating the migration of volatile organics vapors from shallow groundwater and soil through the soil column, into a building through cracks in the floor or foundation, and dilution with indoor air. Evaluation of a future scenario for development of the facility which involves residential uses was conducted to determine conservative screening levels for soil and groundwater protective of indoor air quality, given volatilization of volatile organic compounds (VOCs) from the subsurface into enclosed residential spaces.

The vapor intrusion modeling evaluation includes constituents that have been selected to be evaluated for the protection of indoor air quality, which includes volatile organics and select other chemicals. Model parameters that are representative of actual subsurface conditions at the site, and assumed future design conditions, were used to complete the evaluation. Output from the vapor intrusion evaluation provides soil and groundwater screening levels that are not expected to result in exceedances of the indoor air quality standards. However, should redevelopment of any area of the facility occur in the future, specific evaluation of the planned property, including actual building characteristics, size, and construction information in addition to specific subsurface data, may be necessary to confirm acceptable indoor air levels will not be exceeded for that specific construction scenario.

2.1 COC SCREENING METHODOLOGY

"As stated in the previous section (1.0), MTCA Method B standard formulas were used as screening levels for individual constituents, along with EPA-approved toxicity values. These calculations used accepted values for exposure duration, averaging time, breathing rate, body weight, etc. Since the evaluation described in this attachment uses a back-calculation method to determine soil and groundwater screening levels protective of indoor air under an assumed scenario, exposure assumptions did not factor into the evaluation except as part of the indoor air cleanup level equations from MTCA."

A number of constituents that met this criteria were not included in the evaluation either because there are no current EPA RSLs for a particular chemical, or because the J&E Model is not structured to evaluate chemicals that are sums of multiple chemicals, such as total xylenes. Tables D.1 and D.2 present the list of COCs included in the evaluation.

Because several VOCs detected on-site with a frequency greater than 1 percent were not included in prior industrial J&E modeling (refer to Attachment C: Approved J&E Values for Industrial Settings), these analytes have been modeled using industrial assumptions as per Attachment C, for completeness. Results of this additional modeling are presented in Tables D.3 and D.4.

Deleted: MTCA B

Deleted: COCs for the vapor intrusion evaluation under a residential development scenario were selected based on two factors. The constituents included in this evaluation included the following:¶ <#>Chemicals previously modeled in the Commercial and Industrial settings evaluation for vapor intrusion (refer to Attachment C)¶ Other VOCs detected on-site with a frequency greater than 1 percen that were not previously evaluated in the commercial and industrial setting

Deleted:

Deleted: ¶

Formatted: Font: Not Italic

Formatted: Normal

Deleted: A number of constituents that met this criteria were not included in the evaluation either because there is currently no MTCA air cleanup level developed by Ecology for that particular chemical, such as acetone, or because the J&E Model is not structured to evaluate chemicals that are sums of multiple chemicals, such as total xylenes. Tables D.1 and D.2 present the list of COCs included in the evaluation, and denote which constituents were not calculated due to the reasons stated above. ¶

Deleted: and commercial

Deleted: and Commercial

Deleted: and commercial

Deleted: F:\projects\Boeing - Plant 2\JOB CMI Tech Work\TASk Uplands CMS Document\V2 TMCLs\Rev Agency Review Draft 2008\Attach D\TMCL Apx D 120208.doc

2.2 EXPOSURE ASSUMPTIONS AND AIR SCREENING LEVELS—RESIDENTIAL

As stated in the previous section, MTCA Method B standard formula values were used as screening levels for individual constituents, and were obtained from the CLARC database. These values are calculated by Ecology using the accepted values for exposure duration, averaging time, breathing rate, body weight, etc. Since the evaluation described in this attachment used a back-calculation method to determine soil and groundwater screening levels protective of indoor air under an assumed scenario, exposure assumptions did not factor into the evaluation except as part of the indoor air cleanup level developed by MTCA. For reference, the MTCA residential exposure scenario assumes that for carcinogens, a person is exposed to indoor air within the selected residence 365 days per year, for 30 years, with an averaging time (lifetime) of 75 years. The risk equations used to develop the MTCA B air cleanup levels are detailed in WAC 173-340-750.

Deleted: F:\projects\Boeing - Plant 2\JOB CMI Tech Work\TASk Uplands CMS Document\V2 TMCLs\Rev Agency Review Draft 2008\Attach D\TMCL Apx D 120208.doc

3.0 Johnson and Ettinger Vapor Intrusion Modeling

The Johnson and Ettinger Model was used for the residential exposure scenario, as per previous modeling which developed soil and groundwater screening levels protective of future uses at the property. The Model was run by entering soil and groundwater concentrations into the Model until the indoor air concentration calculated by the J&E worksheets was equal to the MTCA Method B air screening level.

Deleted: commercial and industrial

Rather than using the models to calculate a risk-based soil or groundwater concentration, the J&E advanced groundwater and soil models were used in an iterative manner to determine what soil or groundwater concentration entered into the Model would result in an indoor air concentration ($C_{building}$) equal to the MTCA B air screening level. As an extra level of conservatism, and given no future planning for residential construction at the property, residential building default parameters provided by the J&E Model were used as building input parameters. Model input parameters are discussed in the following sections, and complete J&E Model Data Entry Sheets are also included.

3.1 BUILDING CONSTRUCTION ASSUMPTIONS AND DEFAULT INPUT VALUES

Since there is no future residential construction plan for the property, default values developed by the J&E Model for a residential building construction were used. The following bulleted list provides detail of the Model input parameters relative to building construction. The J&E Model default assumes a single story, 1,075 square foot home. The default values are conservative, as the larger the modeled structure, the greater the potential for dilution, etc. The J&E guidance document (USEPA 2003) describes in detail the processes used for determination of all model default parameters.

- Building Construction = Slab on grade
- Slab thickness = 10 cm
- Soil-building differential pressure = 40 g/cm-s^2
- Home length = 1,000 cm (32.8 feet)
- Home width = 1,000 cm (32.8 feet)
- Ceiling height = 244 cm (8 feet)
- Floor-wall seam crack width = 0.1 cm
- Indoor air exchange rate = 0.25 (one exchange every 4 hours)

3.2 SITE-SPECIFIC SOIL PARAMETERS AND MODEL INPUT VALUES

Input parameters related to the subsurface conditions, including soil type, depth to contamination, and depth to groundwater, were identical to those used in the previous modeling evaluation approved by USEPA for industrial exposure scenarios. Area-specific input values for each of the six modeled areas were determined by field exploration and are presented in Table 2 of Attachment C; refer to Attachment C for collection, evaluation, and application of the area-

Deleted: commercial and

Deleted: F:\projects\Boeing - Plant 2\JOB CMI Tech Work\TASk Uplands CMS Document\V2 TMCLs\Rev Agency Review Draft 2008\Attach D\TMCL Apx D 120208.doc

specific soil parameters. Area-specific input parameters for the J&E Model include the following:

- Average soil/groundwater temperature
- Dry-bulk density
- Total porosity
- Water-filled porosity
- Organic carbon fraction in soil
- Soil type

3.3 DEPTH TO SOIL AND GROUNDWATER CONTAMINATION ASSUMPTIONS

Assumptions regarding depth to contamination were maintained throughout all modeled areas. The assumed average depth to groundwater was 10-feet (300 cm) below ground surface, and the depth to soil contamination was evaluated for two different scenarios. The first assumes soil contamination is present in the unsaturated zone at a depth of 5-feet below ground surface. This scenario would be representative of an area where spills had occurred from underground tanks, or subsurface piping, and contamination was present from 5-feet below the ground surface down to the groundwater table. The second scenario assumed soil contamination was present from immediately below the building slab down to the groundwater table. This follows the methods used in the industrial evaluation scenario with a slight modification to the shallow soil contamination depth. The building slab assumptions in theindustrial scenario use a thicker slab, which is common for industrial building types. The residential evaluation assumes a building slab of 15-cm thick versus 20-cm thick used in the industrial scenario. As a result, the depth to contamination in the residential evaluation is 15 cm, where the depth to contamination in the industrial evaluation is 20 cm. Results for both scenarios, depth to soil contamination equal to 15 cm and depth to soil contamination equal to 150 cm below ground surface, are presented in Table D.2 for all six modeled areas of the facility.

Deleted: commercial and

Deleted: commercial/

Deleted: commercial/

Deleted: commercial/

Deleted: commercial/

Deleted: F:\projects\Boeing - Plant 2\JOB CMI Tech Work\TASk Uplands CMS Document\V2 TMCLs\Rev Agency Review Draft 2008\Attach D\TMCL Apx D 120208.doc

4.0 Evaluation Results

4.1 RESIDENTIAL SCENARIO

Table D.1 presents the groundwater concentrations that are calculated to be protective of indoor air using the J&E Model and the MTCA Method B residential indoor air screening levels. Area-specific soil parameters cause the values to vary somewhat from area to area. For example, the TCE concentrations range from 1.41 µg/L in the Building 2-49/2-66 Area to 10.5 µg/L in the 2-10 Area/North Area. The residential building scenario results in values that are about 20 times lower than those calculated for the scenario presented in Attachment C and approved with stipulations by USEPA.

Deleted: commercial building

Table D.2 presents the soil concentrations that are calculated to be protective of indoor air using the J&E Model and the MTCA Method B residential indoor air screening levels. Area-specific soil parameters cause the values to vary somewhat from area to area. For example, the TCE concentrations range from 3.3 µg/kg in the 2-10 Area/North Area to 3.7 µg/kg in the 2-31 Area and the South Yard Area assuming contamination is present directly beneath the building floor at 15 cm. There are two sets of values given for soil: one at 15 cm, or directly beneath the building floor, and one for 150 cm or approximately mid-way in the vadose zone. These numbers typically differ by a factor of 2 or less. This difference is due to the increased distance that deeper contamination has to travel to reach the building foundation.

Please refer to Attachment C for additional information regarding the use and application of J&E modeling results in regards to future development and construction at the Boeing Plant 2 facility.

Deleted: /COMMERCIAL

4.2 INDUSTRIAL SCENARIO—ADDITIONAL COCS AND TCE

For the additional COCs added in this residential scenario, but not included in the prior J&E calculations (refer to Attachment C), new modeling runs were performed for completeness. These COCs include: 2-butanone, carbon disulfide, m,p-xylene, o-xylene, and chlorobenzene. Tables D.3 and D.4 present the modeling results for these COCs in groundwater and soil. In general, these COCs are not anticipated to be significant concerns at this site, as most are rarely detected at Plant 2, which is why they were not included in prior modeling runs.

Additionally, following completion of the industrial evaluation included in Attachment C, the toxicity factor used in the calculation of MTCA cleanup levels for TCE was revised. As part of this evaluation, the industrial values for TCE were re-modeled and compared to the revised MTCA C air cleanup level. Results of this evaluation are included in Tables D.3 for groundwater, and D.4 for soil.

Deleted: commercial and

Deleted: commercial and

Deleted: F:\projects\Boeing - Plant 2\JOB CMI Tech Work\TASk Uplands CMS Document\V2 TMCLs\Rev Agency Review Draft 2008\Attach D\TMCL Apx D 120208.doc

This page intentionally left blank.

Deleted: F:\projects\Boeing - Plant 2\JOB CMI Tech Work\TASk Uplands CMS Document\V2 TMCLs\Rev Agency Review Draft 2008\Attach D\TMCL Apx D 120208.doc

5.0 References

Interstate Technology Regulatory Council (ITRC). 2007. *Vapor Intrusion Pathway: A Practical Guidance.* January.

U.S. Environmental Protection Agency (USEPA). 2003. *User's Guide for Evaluating Subsurface Vapor Intrusion into Buildings.* Prepared for the USEPA by Environmental Quality Management, Inc. 19 June.

Washington State Department of Ecology (Ecology). 2001. *Model Toxics Control Act Cleanup Regulation Chapter 173-340 WAC.* Toxics Cleanup Department. 12 February.

_____. 2001. *Model Toxics Control Act Cleanup Regulation Chapter 173-340 WAC. Risk Cleanup Levels and Risk Calculations (CLARC) Tables.* Available online at https://fortress.wa.gov/ecy/clarc/CLARCHome.aspx. Toxics Cleanup Department.

Deleted: F:\projects\Boeing - Plant 2\JOB CMI Tech Work\TASk Uplands CMS Document\V2 TMCLs\Rev Agency Review Draft 2008\Attach D\TMCL Apx D 120208.doc

Table of Contents

Change Document as necessary to reflect this is now Attachment "D"

Risk-based Calculations and Supporting Materials

Summary of Seafood Ingestion Parameters for Surface Water TMCL

USEPA Regional Screening Levels

Formatted: Normal

Deleted: Ohio

Deleted: III Generic

Deleted: Tables

Deleted: F:\projects\Boeing - Plant 2\JOB CMI Tech Work\TASk Uplands CMS Document\V2 TMCLs\Rev Agency Review Draft 2008\Attach E - Risk\TMCL Attach E 112408.doc

Risk-based Calculations and Supporting Materials

This attachment provides tables containing toxicity and chemical-specific information that informs the development of all TMCLs (excluding vinyl chloride and TCE, which are based on Ecology CLARC-based values).

The "Table of Seafood Consumption Rates" summarizes the seafood ingestion rates used in the Section 6 groundwater risk-based TMCL calculations. The table provides the consumptions rates for the standard MTCA assumption for an adult, the Asian & Pacific Islander adult and child, and the Tulalip Tribes adult and child. These are used in the Section 6 groundwater risk-based TMCL calculations.

The residential and industrial soil sections of the USEPA Regional Screening Level tables were used in the Section 4 soil TMCL evaluation, except for TCE and vinyl chloride. For those two chemicals, Ecology's CLARC database was used, at the direction of USEPA Region 10. The Regional Screening Level tables are included in this attachment. Information concerning the derivation of values in the tables can be found at http://www.epa.gov/reg3hwmd/risk/human/rb-concentration_table/usersguide.htm and at links to other relevant issues located on that Web site.

Table of Seafood Consumption Rates Used to Calculate TMCLs for Groundwater Discharging to Surface Water at BP2

	Body Weight, kg	Consumption Rate, g/day	Seafood Diet Fraction Affected, unitless	Exposure Duration, years
MTCA Method B	70	54	0.5	30
Tribal Adult	81.8	97.1	1	64
Tribal Child	15	38.8	1	6
Asian & Pacific Islander Adult	63	57.1	1	24
Asian & Pacific Islander Child	15	23	1	6

Deleted: This attachment provides tables containing parameter information used in the development of the soil and groundwater TMCLs.¶ The "Table of Parameter Assumptions" summarizes the seafood ingestion parameters used in the Section 6 groundwater risk-based TMCL calculations. The table compares the values for four scenarios: default MTCA Methods A and B, Tulalip Tribal Adult, and Recreational Consumer. The Tulalip Tribal Adult values are from the Tulalip Tribal adult reasonable maximum exposure (RME) scenario developed by the LDWG in the Baseline Human Health Risk Assessment for the Lower Duwamish Waterway Superfund site. This information is provided for informational purposes to compare different scenario assumptions. ¶ The residential and industrial soil sections of the USEPA Region III Generic Screening Level Tables were used in the Section 4 soil TMCL evaluation. These tables are included in this attachment. The generic screening levels are based on default exposure parameters and factors that represent Reasonable Maximum Exposure conditions for long-term/chronic exposures and are based on the methods outlined in USEPA's Risk Assessment Guidance for Superfund, Part B Manual (1991) and Soil Screening Guidance documents (1996 and 2002). More information and references can be found at: http://www.epa.gov/reg3hwmd/risk/human/rb-concentration_table/usersguide.htm.

Deleted: ¶

Deleted: F:\projects\Boeing - Plant 2\JOB CMI Tech Work\TASk Uplands CMS Document\V2 TMCLs\Rev Agency Review Draft 2008\Attach E - Risk\TMCL Attach E 112408.doc

The tribal and Asian & Pacific Islander consumption rate derivations are discussed in Section 6.3.2 of this document. Child body weights for these groups were not available, so the standard USEPA Superfund assumption of 15 kg was used

Deleted: F:\projects\Boeing - Plant 2\JOB CMI Tech Work\TASk Uplands CMS Document\V2 TMCLs\Rev Agency Review Draft 2008\Attach E - Risk\TMCL Attach E 112408.doc

APPENDIX I

Plant 2 TMCLs for Soil, Groundwater, and Ambient Air

Table I-1
Soil TMCLs, Including Pending Revised TMCLs

CAS	Constituent[1]	USEPA Soil TMCL (mg/kg)
Metals		
7429-90-5	Aluminum	7.7E+04
7440-36-0	Antimony	3.1E+01
7440-38-2	Arsenic	2.0E+01
7440-39-3	Barium	6.4E+02
7440-41-7	Beryllium	1.6E+02
7440-43-9	Cadmium	4.0E+00
18540-29-9	Chromium (VI)	1.2E+00
7440-48-4	Cobalt	1.2E+01
7440-50-8	Copper	8.0E+01
7439-89-6	Iron	5.9E+04
7439-92-1	Lead	2.5E+02
7439-96-5	Manganese	1.8E+03
7439-97-6	Mercury as Elemental Mercury	1.5E+00
7487-94-7	Mercury as Inorganic Mercury Salts	2.3E+01
22967-92-6	Mercury (methyl mercury)	3.8E+00
7439-98-7	Molybdenum	2.0E+01
7440-02-0	Nickel	2.1E+02
7782-49-2	Selenium	1.0E+00
7440-22-4	Silver	1.7E+02
7440-31-5	Tin	4.7E+04
7440-62-2	Vanadium	7.0E+02
7440-66-6	Zinc	1.4E+03
Other Inorganics		
57-12-5	Cyanide (free)	2.0E+01
74-90-8	Cyanide (hydrogen)	4.6E+00
Volatile Organic Constituents (VOCs) not including pre-2005 data		
67-64-1	Acetone	5.1E+02
71-43-2	Benzene	9.3E-02
78-93-3	2-Butanone (MEK)	4.3E+02
75-15-0	Carbon Disulfide	7.5E+01
56-23-5	Carbon Tetrachloride	2.1E-02
108-90-7	Chlorobenzene	2.6E+01
75-00-3	Chloroethane	2.8E+02
67-66-3	Chloroform	2.0E-01
74-87-3	Chloromethane	1.6E+00
106-43-4	4-Chlorotoluene	4.0E+02
95-50-1	1,2-Dichlorobenzene	6.8E+01
106-46-7	1,4-Dichlorobenzene	3.5E-01
75-34-3	1,1-Dichloroethane	7.1E-01
107-06-2	1,2-Dichloroethane	7.0E-02
75-35-4	1,1-Dichloroethene	8.1E-02
156-59-2	cis-1,2-Dichloroethene	2.6E+00
156-60-5	*trans* -1,2-Dichloroethene	1.9E+01
78-87-5	1,2-Dichloropropane	9.2E-02
100-41-4	Ethylbenzene	2.3E-01
98-82-8	Isopropylbenzene(cumene)	7.8E+01
591-78-6	2-Hexanone	3.2E+01
75-09-2	Methylene Chloride	2.4E+00
108-10-1	Methyl Isobutyl Ketone	1.7E+02
91-20-3	Naphthalene	3.6E+00
100-42-5	Styrene	6.3E+03
79-34-5	1,1,2,2-Tetrachloroethane	1.3E-02
127-18-4	Tetrachloroethene (PCE)	4.1E-01
108-88-3	Toluene	1.0E+02
71-55-6	1,1,1-Trichloroethane	1.9E+03
79-00-5	1,1,2-Trichloroethane	7.3E-02
79-01-6	Trichloroethene (TCE)	5.1E-02
120-82-1	1,2,4-trichlorobenzene	8.0E-02
75-69-4	Trichlorofluoromethane	2.0E+02
76-13-1	1,1,2-Trichlorotrifluoroethane	4.3E+02
75-01-4	Vinyl chloride	3.4E-02
108-38-3	m-Xylene	1.6E+02
95-47-6	o-Xylene	2.0E+02
106-42-3	p-Xylene	2.3E+02
10330-20-7	Xylenes (total)[2]	2.0E+02

Table I-1
Soil TMCLs, Including Pending Revised TMCLs

CAS	Constituent[1]	USEPA Soil TMCL (mg/kg)
Semivolatile Organic Compounds (SVOCs)		
83-32-9	Acenaphthene	2.3E+02
208-96-8	Acenaphthylene	--
120-12-7	Anthracene	1.6E+03
191-24-2	Benzo(g,h,i)perylene	--
117-81-7	Bis(2-ethylhexyl)phthalate	3.5E+01
85-68-7	Butylbenzyl phthalate	1.7E+00
59-50-7	4-chloro-3-methylphenol	7.4E+02
132-64-9	Dibenzofuran[3]	1.2E+02
84-74-2	Di-n-butylphthalate	2.6E+01
84-66-2	Diethylphthalate	7.6E+02
105-67-9	2,4-Dimethylphenol	9.5E+01
131-11-3	Dimethylphthalate	--
117-84-0	Di-n-octyl phthalate	--
206-44-0	Fluoranthene	2.3E+02
86-73-7	Fluorene	1.5E+02
7440-62-2	1-Methylnaphthalene	1.6E+01
91-57-6	2-Methylnaphthalene	2.3E+02
95-48-7	2-Methylphenol (o-cresol)	2.5E+02
106-44-5	4-Methylphenol (p-cresol)	4.1E+01
91-20-3	Naphthalene	3.6E+00
85-01-8	Phenanthrene	--
108-95-2	Phenol	1.9E+03
129-00-0	Pyrene	2.4E+02
Mutagenic Carcinogenic Polycyclic Aromatic Hydrocarbons (cPAHs)		
--	Benzo(a)pyrene TEQ[4,5]	1.5E-02
Polychlorinated Biphenyls (PCBs)		
53469-21-9	Aroclor 1016/1242	7.2E-04
12672-29-6	Aroclor 1248	2.2E-01
11097-69-1	Aroclor 1254	2.9E-04
37324-23-2	Aroclor 1260	5.4E-03
1336-36-3	Total PCBs	1.8E-03
Total Petroleum Hydrocarbons (TPH)[6]		
--	TPH—Gasoline (benzene present)	3.0E+01
--	TPH—Aged gasoline and mineral spirits	1.0E+02
--	TPH—Diesel #2 (NW TPH methods)[7]	2.0E+03
--	TPH—Diesel #2 (includes older methods)[7]	2.0E+03
--	TPH—Heavy oil	2.0E+03

Notes:

-- Not available.

These TMCLs have changed since publication of the May 26, 2011 TMCL Technical Memorandum due to updates to the USEPA RSL, IRIS toxicity factor, or selection of a more suitable bioconcentration factor. Formal approval of TMCLs and FMCLs as listed in this table from USEPA has not yet been obtained.

1 Not all chemicals are constituents needing TMCLs at Boeing Plant 2.
2 Older data are reported as total xylenes, whereas newer data are reported as o-xylene and m,p-xylene. Some areas with total data do not have more recent isomer-specific data.
3 The provisional toxicity factors for this chemical are semi-quantative and should be used for screening purposes only.
4 Benzo(a)pyrene TEQ calculated using one-half the reporting limit as a surrogate for non-detected constituents when at least one constituent contributing to the TEQ was detected.
5 USEPA has approved the use of Ecology's TEFs for this site.
6 Petroleum hydrocarbons have been measured at Boeing Plant 2 over the years using a variety of methods and standards. Refer to Table B.1e in the TMCL Technical Memorandum to understand how each of the measurements of TPH have been compared to the TPH TMCLs.
7 A typographical error is present recording the TMCL for this constituent in Table B.1e of the TMCL Technical Memorandum, which erroneously records the TMCL as 100 mg/kg instead of 2,000 mg/kg; this error does not impact TPH-Diesel #2's status as a COPC.

Abbreviations:

CAS Chemical abstract number
COC Constituent of concern
COPC Constituent of potential concern
Ecology Washington State Department of Ecology
FMCL Final Media Cleanup Level
MTCA Model Toxics Control Act
NW Northwest
TEF Toxic Equivalency Factor
TEQ Toxic Equivalent
TMCL Target Media Cleanup Level
USEPA U.S. Environmental Protection Agency

Table I-2
Groundwater TMCL and FMCL
Summary for Constituents of Potential Concern

CAS	Constituent[1]	USEPA Groundwater TMCL (µg/L)
Dissolved Metals		
7429-90-5	Aluminum [2]	8.7E+01
7440-36-0	Antimony (metallic)	1.5E+02
7440-38-2	Arsenic	8.0E+00
7440-39-3	Barium	7.7E+02
7440-41-7	Beryllium	1.2E+01
7440-43-9	Cadmium	2.5E-01
18540-29-9	Chromium (VI)	5.8E-01
7440-48-4	Cobalt	4.8E+00
7440-50-8	Copper	8.0E+00
7439-89-6	Iron[3]	1.0E+03
7439-92-1	Lead	2.5E+00
7439-96-5	Manganese[3]	2.0E+03
7439-97-6	Mercury (elemental)	1.2E-02
7487-94-7	Mercury (inorganic salts)[4]	4.8E+00
22967-92-6	Mercury (methyl mercury)	3.0E-01
7439-98-7	Molybdenum	8.0E+01
7440-02-0	Nickel	8.2E+00
7782-49-2	Selenium	5.0E+00
7440-22-4	Silver	2.2E+01
7440-31-5	Tin	9.6E+03
1314-62-1	Vanadium	1.4E+02
7440-66-6	Zinc	5.6E+01
Other Inorganics		
57-12-5	Cyanide (free)—total	1.0E+00
57-12-5	Cyanide (free)—no fraction specified	1.0E+00
Semivolatile Organic Compounds (SVOCs)		
83-32-9	Acenaphthene	1.2E+02
208-96-8	Acenaphthylene	--
120-12-7	Anthracene	2.0E+02
191-24-2	Benzo(g,h,i)perylene	--
117-81-7	Bis(2-ethylhexyl)phthalate	1.2E+00
85-68-7	Butylbenzyl phthalate	4.1E-01
59-50-7	4-chloro-3-methylphenol	3.7E+03
132-64-9	Dibenzofuran[5]	3.2E+01
84-74-2	Di-n-butylphthalate	4.7E+01
84-66-2	Diethylphthalate	1.8E+04
105-67-9	2,4-Dimethylphenol	6.6E+02
131-11-3	Dimethylphthalate	1.1E+06
117-84-0	Di-n-octyl phthalate	--
206-44-0	Fluoranthene	1.1E+01
86-73-7	Fluorene	4.5E+01
7440-62-2	1-Methylnaphthalene	2.3E+00
91-57-6	2-Methylnaphthalene	6.4E+01
95-48-7	2-Methylphenol (o-cresol)	3.1E+03
106-44-5	4-Methylphenol (p-cresol)	3.3E+02
91-20-3	Naphthalene	2.6E+01
85-01-8	Phenanthrene	--
108-95-2	Phenol	4.1E+04
129-00-0	Pyrene	9.8E+00

Table I-2
Groundwater TMCL and FMCL
Summary for Constituents of Potential Concern

CAS	Constituent[1]	USEPA Groundwater TMCL (µg/L)
Mutagenic Cancerous Polycyclic Aromatic Hydrocarbons (cPAHs)		
56-55-3	Benzo(a) anthracene	1.8E-03
50-32-8	Benzo(a) pyrene	1.8E-04
205-99-2	Benzo (b) fluoranthene	1.8E-03
207-08-9	Benzo(k) fluoranthene	1.8E-03
218-01-9	Chrysene	1.8E-02
53-70-3	Dibenz(a,h)anthracene	1.8E-03
193-39-5	Indeno(1,2,3-cd)pyrene	1.8E-03
--	Benzo(a)pyrene TEQ[6,7]	1.8E-04
Polychlorinated Biphenyls (PCBs)		
53469-21-9	Aroclor 1016/1242	2.3E-05
12672-29-6	Aroclor 1248	2.3E-05
11097-69-1	Aroclor 1254	5.5E-06
37324-23-2	Aroclor 1260	2.3E-05
1336-36-3	Total PCBs	2.3E-05
Volatile Organic Constituents (VOCs)		
67-64-1	Acetone	1.1E+05
71-43-2	Benzene	2.0E+00
78-93-3	2-Butanone (MEK)	7.3E+04
75-15-0	Carbon Disulfide	3.9E+03
56-23-5	Carbon Tetrachloride	4.6E-01
108-90-7	Chlorobenzene	2.7E+02
75-00-3	Chloroethane	2.1E+04
67-66-3	Chloroform	9.4E+00
74-87-3	Chloromethane	1.9E+02
106-43-4	4-Chlorotoluene	2.6E+03
95-50-1	1,2-Dichlorobenzene	4.4E+02
106-46-7	1,4-Dichlorobenzene	1.7E+00
75-34-3	1,1-Dichloroethane	3.3E+01
107-06-2	1,2-Dichloroethane	3.6E+00
75-35-4	1,1-Dichloroethene	3.2E+00
156-59-2	cis-1,2-Dichloroethene	1.3E+02
156-60-5	trans-1,2-Dichloroethene	9.4E+02
78-87-5	1,2-Dichloropropane	3.7E+00
100-41-4	Ethylbenzene	1.7E+00
98-82-8	Isopropylbenzene(cumene)	2.7E+02
591-78-6	2-Hexanone	3.2E+03
75-09-2	Methylene Chloride	6.1E+01
108-10-1	Methyl Isobutyl Ketone	1.9E+04
91-20-3	Naphthalene	2.6E+01
100-42-5	Styrene	7.7E+04
79-34-5	1,1,2,2-Tetrachloroethane	3.3E-01
127-18-4	Tetrachloroethene (PCE)	5.3E+00
108-88-3	Toluene	1.3E+03
71-55-6	1,1,1-Trichloroethane	4.6E+04
79-00-5	1,1,2-Trichloroethane	2.3E+00
79-01-6	Trichloroethene (TCE)	1.4E+00
120-82-1	1,2,4-trichlorobenzene	1.3E-01
75-69-4	Trichlorofluoromethane	6.9E+03
76-13-1	1,1,2-Trichlorotrifluoroethane	5.9E+04
75-01-4	Vinyl chloride	2.4E+00
108-38-3	m-Xylene	1.3E+03
95-47-6	o-Xylene	1.6E+03
106-42-3	p-Xylene	1.6E+03
10330-20-7	Xylenes (total)	1.5E+03

Table I-2
Groundwater TMCL and FMCL
Summary for Constituents of Potential Concern

CAS	Constituent[1]	USEPA Groundwater TMCL (µg/L)
Total Petroleum Hydrocarbons (TPH)[8]		
--	TPH—Gasoline (benzene present)	8.0E+02
--	TPH—Aged gasoline and mineral spirits	1.0E+03
--	TPH—Diesel #2	5.0E+02
--	TPH—Heavy oil	5.0E+02

Notes

Pending formal approval from USEPA, these TMCLs have changed since publication of the May 26, 2011 TMCL Technical Memorandum due to updates to the USEPA RSL, IRIS toxicity factor, or selection of a more suitable bioconcentration factor.

Boeing began ongoing discussions with EPA on January 17, 2013 to use an alternative cleanup level in place of the NTR (3.2 µg/L). A likely candidate for an alternative cleanup level is the lowest of the criteria protective of Asian Pacific Islander/Tribal exposure scenarios, or 2,300 µg/L.

These TMCLs were incorrectly reversed in the TMCL Technical Memorandum. This error should be corrected in subsequent documents.

1 This table was developed from Table B.2 of the TMCL Technical Memorandum, and includes constituents identified as COCs at the point of compliance and potential COCs identified using data upgradient of the point of compliance. COCs may be added in the future depending on future sampling results.

2 Pending formal agreement from USEPA, aluminum FMCL is only applicable to dissolved aluminum concentrations in groundwater monitoring wells with turbidity of less than 5 NTU. Future sampling will require use of a 0.1 micron filter.

3 Iron may be dissolving from natural soils due to anaerobic groundwater conditions present on the Site. Iron, manganese, and other naturally occuring metals are not expected to be carried forward as COCs at Plant 2.

4 Mercuric chloride used as a surrogate.

5 The provisional toxicity factors for this chemical are semi-quantative and should be used for screening purposes only.

6 Benzo(a)pyrene TEQ calculated using one-half the reporting limit as a surrogate for non-detected constituents when at least one constituent contributing to the TEQ was detected.

7 USEPA has approved the use of Ecology's TEFs for this site.

8 Petroleum hydrocarbons have been measured at Boeing Plant 2 over the years using a variety of methods and standards. Refer to the table B.1e in the TMCL Technical Memorandum to understand how each of the measurements of TPH have been compared to the TPH TMCLs.

Abbreviations:

CAS	Chemical abstract number
COC	Constituent of concern
Ecology	Washington State Department of Ecology
FMCL	Final Media Cleanup Level
MTCA	Model Toxics Control Act
NW	Northwest
NTU	Nephelometric Turbidity Units
TEF	Toxic Equivalency Factor
TEQ	Toxic Equivalent
TMCL	Target Media Cleanup Level
USEPA	U.S. Environmental Protection Agency

Table I-3
Air TMCL and FMCL Summary Table

CAS Number	Chemical	USEPA Ambient Air TMCLs			
		Residential		Worker[1, 2]	
		TMCL (µg/m³)	Source	TMCL (µg/m³)	Source
Volatile Organic Compounds (VOCs)					
67-64-1	Acetone	3.2E+04	EPA RSL	1.4E+05	Modified EPA RSL
71-43-2	Benzene	3.1E-01	EPA RSL	1.6E+01	Modified EPA RSL
78-93-3	2-Butanone (MEK)	5.2E+03	EPA RSL	2.2E+04	Modified EPA RSL
75-15-0	Carbon Disulfide	7.3E+02	EPA RSL	3.1E+03	Modified EPA RSL
56-23-5	Carbon Tetrachloride	4.1E-01	EPA RSL	2.0E+01	Modified EPA RSL
108-90-7	Chlorobenzene	5.2E+01	EPA RSL	2.2E+02	Modified EPA RSL
75-00-3	Chloroethane	1.0E+04	EPA RSL	4.4E+04	Modified EPA RSL
67-66-3	Chloroform	1.1E-01	EPA RSL	5.3E+00	Modified EPA RSL
74-87-3	Chloromethane	9.4E+01	EPA RSL	3.9E+02	Modified EPA RSL
106-43-4	4-Chlorotoluene	--	--	--	--
95-50-1	1,2-Dichlorobenzene	2.1E+02	EPA RSL	8.8E+02	Modified EPA RSL
106-46-7	1,4-Dichlorobenzene	2.2E-01	EPA RSL	1.1E+01	Modified EPA RSL
75-34-3	1,1-Dichloroethane	1.5E+00	EPA RSL	7.7E+01	Modified EPA RSL
107-06-2	1,2-Dichloroethane	9.4E-02	EPA RSL	4.7E+00	Modified EPA RSL
75-35-4	1,1-Dichloroethene	2.1E+02	EPA RSL	8.8E+02	Modified EPA RSL
156-59-2	*cis* -1,2-Dichloroethene[3]	--	--	--	--
156-60-5	*trans* -1,2-Dichloroethene[3]	--	--	--	--
78-87-5	1,2-Dichloropropane	2.4E-01	EPA RSL	1.2E+01	Modified EPA RSL
100-41-4	Ethylbenzene	9.7E-01	EPA RSL	4.9E+01	Modified EPA RSL
98-82-8	Isopropylbenzene(cumene)	4.2E+02	EPA RSL	1.8E+03	Modified EPA RSL
591-78-6	2-Hexanone	3.1E+01	EPA RSL	1.3E+02	Modified EPA RSL
75-09-2	Methylene Chloride	9.6E+01	EPA RSL	2.6E+03	Modified EPA RSL
108-10-1	Methyl Isobutyl Ketone	3.1E+03	EPA RSL	1.3E+04	Modified EPA RSL
91-20-3	Naphthalene	7.2E-02	EPA RSL	3.6E+00	Modified EPA RSL
100-42-5	Styrene	1.0E+03	EPA RSL	4.4E+03	Modified EPA RSL
79-34-5	1,1,2,2-Tetrachloroethane	4.2E-02	EPA RSL	2.1E+00	Modified EPA RSL
127-18-4	Tetrachloroethene (PCE)	9.4E+00	EPA RSL	4.7E+02	Modified EPA RSL
108-88-3	Toluene	5.2E+03	EPA RSL	2.2E+04	Modified EPA RSL
71-55-6	1,1,1-Trichloroethane	5.2E+03	EPA RSL	2.2E+04	Modified EPA RSL
79-00-5	1,1,2-Trichloroethane	1.5E-01	EPA RSL	7.7E+00	Modified EPA RSL
79-01-6	Trichloroethene (TCE)	4.3E-01	EPA RSL	8.4E+00	EPA RSL Subchronic
120-82-1	1,2,4-trichlorobenzene[3]	--	--	--	--
75-69-4	Trichlorofluoromethane	7.3E+02	EPA RSL	3.1E+03	Modified EPA RSL
76-13-1	1,1,2-Trichlorotrifluoroethane	3.1E+02	EPA RSL	1.3E+03	Modified EPA RSL
75-01-4	Vinyl chloride[4]	1.6E-01	EPA RSL	2.8E+01	Modified EPA RSL
108-38-3	m-Xylene	7.3E+02	EPA RSL	3.1E+03	Modified EPA RSL
95-47-6	o-Xylene	7.3E+02	EPA RSL	3.1E+03	Modified EPA RSL
106-42-3	p-Xylene	7.3E+02	EPA RSL	3.1E+03	Modified EPA RSL
10330-20-7	Xylenes (total)	1.0E+02	EPA RSL	4.4E+02	Modified EPA RSL

Notes:

1 EPA Region 10 (R10) has made a risk management decision to use a 1 in 100,000 excess indiviual lifetime risk for cancer for workers at Boeing Plant 2. Calculations are based on the EPA RSL equations modified for a total

2 Ecology worker exposure was modified from full time (365 days/year x 24 hours/day) to the work week allowed under industrial soil exposure (10 hours/day x 7 days/week x 50 weeks/year).

3 No inhalation toxicity factors are available.

4 Vinyl chloride is considered mutagenic by EPA; its values are from the May 2012 EPA RSL Tables for residential

Abbreviations:

CAS Chemical abstract number
Ecology Washington State Department of Ecology
EPA U.S. Environmental Protection Agency
FMCL Final Media Cleanup Level
RSL Regional screening level
TMCL Target Media Cleanup Level

APPENDIX J

Terrestrial Ecological Evaluation Exposure Analysis

Washington State Department of Ecology
Toxics Cleanup Program

Table 749-1

Simplified Terrestrial Ecological Evaluation-Exposure Analysis Procedure

Estimate the area of contiguous (connected) undeveloped land on the site or within 500 feet of any area of the site to the nearest 1/2 acre (1/4 acre if the area is less than 0.5 acre).			
1) From the table below, find the number of points corresponding to the area and enter this number in the field to the right.			
Boeing property that is unpaved is ~0.3 acres Port property (paved but paving is in poor condition) is ~ 0.5 acres	Area (acres)	Points	6
	0.25 or less	4	
	0.5	5	
	1.0	6	
	1.5	7	
	2.0	8	
	2.5	9	
	3.0	10	
	3.5	11	
	4.0 or more	12	
2) Is this an industrial or commercial property? If yes, enter a score of 3. If no, enter a score of 1			3
3)[a] Enter a score in the box to the right for the habitat quality of the site, using the following rating system[b]. High=1, Intermediate=2, Low=3			3
4) Is the undeveloped land likely to attract wildlife? If yes, enter a score of 1 in the box to the right. If no, enter a score of 2.[c]			2
5) Are there any of the following soil contaminants present: Chlorinated dioxins/furans, PCB mixtures, DDT, DDE, DDD, aldrin, chlordane, dieldrin, endosulfan, endrin, heptachlor, benzene hexachloride, toxaphene, hexachlorobenzene, pentachlorophenol, pentachlorobenzene? If yes, enter a score of 1 in the box to the right. If no, enter a score of 4.			1
6) Add the numbers in the boxes on lines 2-5 and enter this number in the box to the right. If this number is larger than the number in the box on line 1, the simplified evaluation may be ended.			9

Notes for Table 749-1

[a] It is expected that this habitat evaluation will be undertaken by an experienced field biologist. If this is not the case, enter a conservative score of (1) for questions 3 and 4.

[b] **Habitat rating system.** Rate the quality of the habitat as high, intermediate or low based on your professional judgment as a field biologist. The following are suggested factors to consider in making this evaluation:

> **Low:** Early successional vegetative stands; vegetation predominantly noxious, nonnative, exotic plant species or weeds. Areas severely disturbed by human activity, including intensively cultivated croplands. Areas isolated from other habitat used by wildlife.

High: Area is ecologically significant for one or more of the following reasons: Late-successional native plant communities present; relatively high species diversity; used by an uncommon or rare species; priority habitat (as defined by the Washington Department of fish and Wildlife); part of a larger area of habitat where size or fragmentation may be important for the retention of some species.

Intermediate: Area does not rate as either high or low.

[c] Indicate "yes" if the area attracts wildlife or is likely to do so. Examples: Birds frequently visit the area to feed; evidence of high use b mammals (tracks, scat, etc.); habitat "island" in an industrial area; unusual features of an area that make it important for feeding animals; heavy use during seasonal migrations.

[Area Calculation Aid] [Aerial Photo with Area Designations] [TEE Table 749-1] [Index of Tables]

[Exclusions Main] [TEE Definitions] [Simplified or Site-Specific?] [Simplified Ecological Evaluation] [Site-Specific Ecological Evaluation] [WAC 173-340-7493]

[TEE Home]

APPENDIX K

Tidal Study Calculations

APPENDIX K-1
TIDAL STUDY CALCULATIONS

Transmissivity and Hydraulic Conductivity Calculations		LDW t_0 Time between Max and Min	I-205 (west-center edge of the site, at steel bulkhead) t_1 Time lag between LDW and I-205 based on min/max elevation data	MW-7 (southwest corner of site, at wooden bulkhead) t_1 Time lag between LDW and MW-7 based on min/max elevation data	MW-8 (inland) t_1 Time lag between LDW and MW-8 based on min/max elevation data	MW-10 (west-center edge of site, at steel bulkhead) t_1 Time lag between LDW and MW-10 based on min/max elevation data	MW-12 (inland) t_1 Time lag between LDW and MW-12 based on min/max elevation data	MW-20 (northwest corner of site, at wooden bulkhead) t_1 Time lag between LDW and MW-20 based on min/max elevation data
H **(b)**	1/24/12 17:26		0:36:03	0:03:57	0:45:16	0:23:06	**(a)**	0:23:41
L	1/24/12 23:50	6.4	**(a)**	0:59:57	1:52:16	0:56:06	**(a)**	1:30:41
H	1/25/12 6:32	6.7	1:28:03	0:59:57	2:13:16	1:37:06	3:26:15	1:35:41
L	1/25/12 12:22	5.8	**(a)**	0:45:57	1:15:16	1:11:06	**(a)**	1:11:41
H	1/25/12 17:46	5.4	1:08:03	0:31:57	1:07:16	1:11:06	**(a)**	0:55:41
L	1/26/12 0:08	6.4	**(a)**	1:13:57	1:41:16	1:37:06	**(a)**	1:41:41
H	1/26/12 6:52	6.7	1:22:03	1:01:57	2:17:16	1:17:06	4:02:15	1:35:41
L	1/26/12 13:14	6.4	**(a)**	0:41:57	1:35:16	1:21:06	**(a)**	1:21:41
H	1/26/12 18:36	5.4	**(a)**	0:29:57	1:03:16	0:39:06	**(a)**	1:03:41
L	1/27/12 0:48	6.2	**(a)**	1:11:57	1:49:16	0:57:06	**(a)**	1:37:41
H	1/27/12 7:40	6.9	1:12:03	0:55:57	**(a)**	1:37:06	**(a)**	1:31:41
		AVERAGE t_0:	**AVERAGE t_1:**	**AVERAGE t_1:**	**AVERAGE t_1:**	**AVERAGE t_1:**	**AVERAGE t_1:**	**AVERAGE t_1:**
Time (hours:minutes:seconds)			1:17:33	0:53:21	1:39:23	1:14:24	3:44:15	1:24:35
Time (hours)		6.22	1.29	0.89	1.66	1.24	3.74	1.41
Distance from well to LDW (x)			75	35	300	10	400	65
T (ft^2/hr) =			83	38	812	2	284	53
T (ft^2/day) =			2,001	921	19,495	39	6,807	1,263
K (ft/day) =			15	7.1	150	0.30	52	10
K (cm/sec) =			5.43E-03	2.50E-03	5.29E-02	1.05E-04	1.85E-02	3.43E-03

Transmissivity/Hydraulic Conductivity Calculations:

$T=(x^2St_0)/(4\pi t_1^2)$

T = Transmissivity

x = Distance from well to LDW (see above)

S (specific yield) = 0.05 [estimated based typcal on soil type]

t_0 = Average time between tidal max and tidal min (see above)

π = 3.14159

t_1 = Average time lag between LDW max/min and max/min at well (see above)

K=T/b

K = Hydraulic Conductivity

b (thickness of saturated aquifer, ft) = 130 ft (estimated)

(a) High or low tide was not recorded or was omitted due to the lack of a precise peak or trough

(b) Transducers installed just before this tidal maximum; this data omitted from transmissivity calculations

APPENDIX L

RI Groundwater Analytical Results

TABLE L-1
GROUNDWATER ANALYTICAL RESULTS
BOEING ISAACSON-THOMPSON
REMEDIAL INVESTIGATION

Location:		IT-I-104			IT-I-104			IT-DUP-2 (IT-I-104)			IT-I-104			IT-DUP-1 (IT-I-104)			IT-I-104		
Laboratory Sample ID:	Preliminary	UA54G/UA54P/UA55G/UA55O/UB47G/UB47O			6578917/6578918/UM31B			6578923/6578924/UM31E			6689134/6689135/6689136/UY55B			6689137/6689138/6689139/UY55C			6788036/6788037/6788038/VJ32C		
Laboratory Data Package ID:	Cleanup	UA54/UA55/UB47			1295418/UM31			1295418/UM31			1316071/UY55			1316071/UY55			1335483/VJ32		
Sample Date:	Levels	12/08/2011			3/13/2012			3/13/2012			6/14/2012			6/14/2012			9/12/2012		
		Result	Reporting Limit	Detection Limit	Result	Reporting Limit	Detection Limit	Result	Reporting Limit	Detection Limit	Result	Reporting Limit	Detection Limit	Result	Reporting Limit	Detection Limit	Result	Reporting Limit	Detection Limit
VOLATILES (µg/L)																			
Method SW8260C																			
Acetone	110,000	5.0 U	5.0	2.1	3.0 U	5.0	3.0	3.0 U	5.0	3.0	3.0 U	5.0	3.0	3.0 U	5.0	3.0	3.0 U	5.0	3.0
Acrolein	---	5.0 UJ	5.0	2.5	5.0 U	25	5.0	5.0 U	25	5.0	5.0 U	25	5.0	5.0 U	25	5.0	5.0 U	25	5.0
Acrylonitrile	0.057	1.0 U	1.0	0.60	1.0 U	5.0	1.0	1.0 U	5.0	1.0	1.0 U	5.0	1.0	1.0 U	5.0	1.0	1.0 U	5.0	1.0
Benzene	2	0.2 U	0.2	0.03	0.1 U	0.2	0.1	0.1 U	0.2	0.1	0.1 U	0.2	0.1	0.1 U	0.2	0.1	0.1 U	0.2	0.1
Bromobenzene	---	0.2 U	0.2	0.06	0.1 U	0.5	0.1	0.1 U	0.5	0.1	0.1 U	0.5	0.1	0.1 U	0.5	0.1	0.1 U	0.5	0.1
Bromochloromethane	---	0.2 U	0.2	0.06	0.1 U	0.5	0.1	0.1 U	0.5	0.1	0.1 U	0.5	0.1	0.1 U	0.5	0.1	0.1 U	0.5	0.1
Bromodichloromethane	17	0.2 U	0.2	0.05	0.1 U	0.5	0.1	0.1 U	0.5	0.1	0.1 U	0.5	0.1	0.1 U	0.5	0.1	0.1 U	0.5	0.1
Bromoform	---	0.2 U	0.2	0.06	0.1 U	0.5	0.1	0.1 U	0.5	0.1	0.1 U	0.5	0.1	0.1 U	0.5	0.1	0.1 U	0.5	0.1
Bromomethane	---	1.0 U	1.0	0.25	0.1 U	0.5	0.1	0.1 U	0.5	0.1	0.1 U	0.5	0.1	0.1 U	0.5	0.1	0.1 U	0.5	0.1
2-Butanone	73,000	5.0 UJ	5.0	0.81	1.0 U	5.0	1.0	1.0 U	5.0	1.0	1.0 U	5.0	1.0	1.0 U	5.0	1.0	1.0 U	5.0	1.0
n-Butylbenzene	780	0.2 U	0.2	0.02	0.1 U	0.5	0.1	0.1 U	0.5	0.1	0.1 U	0.5	0.1	0.1 U	0.5	0.1	0.1 U	0.5	0.1
sec-Butylbenzene	---	0.2 U	0.2	0.02	0.1 U	0.5	0.1	0.1 U	0.5	0.1	0.1 U	0.5	0.1	0.1 U	0.5	0.1	0.1 U	0.5	0.1
tert-Butylbenzene	---	0.2 U	0.2	0.03	0.1 U	0.5	0.1	0.1 U	0.5	0.1	0.1 U	0.5	0.1	0.1 U	0.5	0.1	0.1 U	0.5	0.1
Carbon Disulfide	3900	0.2 U	0.2	0.04	0.4 U	0.5	0.4	0.4 U	0.5	0.4	0.4 U	0.5	0.4	0.4 U	0.5	0.4	0.4 U	0.5	0.4
Carbon Tetrachloride	0.46	0.2 U	0.2	0.04	0.1 U	0.2	0.1	0.1 U	0.2	0.1	0.1 U	0.2	0.1	0.1 U	0.2	0.1	0.1 U	0.2	0.1
Chlorobenzene	270	0.2 U	0.2	0.02	0.1 U	0.5	0.1	0.1 U	0.5	0.1	0.1 U	0.5	0.1	0.1 U	0.5	0.1	0.1 U	0.5	0.1
Chloroethane	21,000	0.2 U	0.2	0.09	0.1 U	0.5	0.1	0.1 U	0.5	0.1	0.1 U	0.5	0.1	0.1 U	0.5	0.1	0.1 U	0.5	0.1
Chloroform	9.4	0.2 U	0.2	0.03	0.1 U	0.2	0.1	0.1 U	0.2	0.1	0.1 U	0.2	0.1	0.1 U	0.2	0.1	0.1 U	0.2	0.1
Chloromethane	10.3	0.5 U	0.5	0.10	0.2 U	0.5	0.2	0.2 U	0.5	0.2	0.2 U	0.5	0.2	0.2 U	0.5	0.2	0.2 U	0.5	0.2
2-Chlorotoluene	---	0.2 U	0.2	0.02	0.1 U	0.5	0.1	0.1 U	0.5	0.1	0.1 U	0.5	0.1	0.1 U	0.5	0.1	0.1 U	0.5	0.1
4-Chlorotoluene	2600	0.2 U	0.2	0.02	0.1 U	0.5	0.1	0.1 U	0.5	0.1	0.1 U	0.5	0.1	0.1 U	0.5	0.1	0.1 U	0.5	0.1
1,2-Dibromo-3-chloropropane	---	0.5 U	0.5	0.04	0.2 U	0.5	0.2	0.2 U	0.5	0.2	0.2 U	0.5	0.2	0.2 U	0.5	0.2	0.2 U	0.5	0.2
Dibromochloromethane	---	0.2 U	0.2	0.05	0.1 U	0.5	0.1	0.1 U	0.5	0.1	0.1 U	0.5	0.1	0.1 U	0.5	0.1	0.1 U	0.5	0.1
Dibromomethane	---	0.2 U	0.2	0.14	0.1 U	0.5	0.1	0.1 U	0.5	0.1	0.1 U	0.5	0.1	0.1 U	0.5	0.1	0.1 U	0.5	0.1
trans-1,4-Dichloro-2-butene	---	1.0 UJ	1.0	0.32	1.0 U	5.0	1.0	1.0 U	5.0	1.0	1.0 U	5.0	1.0	1.0 U	5.0	1.0	1.0 U	5.0	1.0
1,2-Dichlorobenzene	440	0.2 U	0.2	0.04	0.1 U	0.5	0.1	0.1 U	0.5	0.1	0.1 U	0.5	0.1	0.1 U	0.5	0.1	0.1 U	0.5	0.1
1,3-Dichlorobenzene	960	0.2 U	0.2	0.04	0.1 U	0.5	0.1	0.1 U	0.5	0.1	0.1 U	0.5	0.1	0.1 U	0.5	0.1	0.1 U	0.5	0.1
1,4-Dichlorobenzene	1.7	0.2 U	0.2	0.04	0.1 U	0.5	0.1	0.1 U	0.5	0.1	0.1 U	0.5	0.1	0.1 U	0.5	0.1	0.1 U	0.5	0.1
1,1-Dichloroethane	33	0.2 U	0.2	0.05	0.1 U	0.5	0.1	0.1 U	0.5	0.1	0.1 U	0.5	0.1	0.1 U	0.5	0.1	0.1 U	0.5	0.1
1,2-Dichloroethane	3.6	0.2 U	0.2	0.07	0.1 U	0.2	0.1	0.1 U	0.2	0.1	0.1 U	0.2	0.1	0.1 U	0.2	0.1	0.1 U	0.2	0.1
1,1-Dichloroethene	3.2	0.2 U	0.2	0.05	0.1 U	0.2	0.1	0.1 U	0.2	0.1	0.1 U	0.2	0.1	0.1 U	0.2	0.1	0.1 U	0.2	0.1
cis-1,2-Dichloroethene	130	**0.2** J1	0.2	0.04	**0.2** J1	0.2	0.1	**0.2**	0.2	0.1	**0.2** J1	0.2	0.1	**0.2**	0.2	0.1	**0.1** J1	0.2	0.1
trans-1,2-Dichloroethene	940	0.2 U	0.2	0.05	0.1 U	0.2	0.1	0.1 U	0.2	0.1	0.1 U	0.2	0.1	0.1 U	0.2	0.1	0.1 U	0.2	0.1
1,2-Dichloropropane	3.7	0.2 U	0.2	0.04	0.1 U	0.5	0.1	0.1 U	0.5	0.1	0.1 U	0.5	0.1	0.1 U	0.5	0.1	0.1 U	0.5	0.1
1,3-Dichloropropane	---	0.2 U	0.2	0.06	0.1 U	0.5	0.1	0.1 U	0.5	0.1	0.1 U	0.5	0.1	0.1 U	0.5	0.1	0.1 U	0.5	0.1
2,2-Dichloropropane	---	0.2 U	0.2	0.05	0.1 U	0.5	0.1	0.1 U	0.5	0.1	0.1 U	0.5	0.1	0.1 U	0.5	0.1	0.1 U	0.5	0.1
1,1-Dichloropropene	---	0.2 U	0.2	0.03	0.1 U	0.5	0.1	0.1 U	0.5	0.1	0.1 U	0.5	0.1	0.1 U	0.5	0.1	0.1 U	0.5	0.1
cis-1,3-Dichloropropene	---	0.2 U	0.2	0.06	0.1 U	0.2	0.1	0.1 U	0.2	0.1	0.1 U	0.2	0.1	0.1 U	0.2	0.1	0.1 U	0.2	0.1
trans-1,3-Dichloropropene	---	0.2 U	0.2	0.08	0.1 U	0.2	0.1	0.1 U	0.2	0.1	0.1 U	0.2	0.1	0.1 U	0.2	0.1	0.1 U	0.2	0.1
Ethylbenzene	1.7	0.2 U	0.2	0.04	0.1 U	0.5	0.1	0.1 U	0.5	0.1	0.1 U	0.5	0.1	0.1 U	0.5	0.1	0.1 U	0.5	0.1
Ethylene Dibromide	---	0.2 U	0.2	0.08	0.1 U	0.5	0.1	0.1 U	0.5	0.1	0.1 U	0.5	0.1	0.1 U	0.5	0.1	0.1 U	0.5	0.1
Hexachlorobutadiene	---	0.5 U	0.5	0.07	0.1 U	0.5	0.1	0.1 U	0.5	0.1	0.1 U	0.5	0.1	0.1 U	0.5	0.1	0.1 U	0.5	0.1
2-Hexanone	3200	5.0 U	5.0	0.90	1.0 U	5.0	1.0	1.0 U	5.0	1.0	1.0 U	5.0	1.0	1.0 U	5.0	1.0	1.0 U	5.0	1.0
Isopropylbenzene	270	0.2 U	0.2	0.02	0.1 U	0.5	0.1	0.1 U	0.5	0.1	0.1 U	0.5	0.1	0.1 U	0.5	0.1	0.1 U	0.5	0.1
4-Isopropyltoluene	---	0.2 U	0.2	0.03	0.1 U	0.5	0.1	0.1 U	0.5	0.1	0.1 U	0.5	0.1	0.1 U	0.5	0.1	0.1 U	0.5	0.1
Methyl Iodide	---	1.0 U	1.0	0.23	0.1 U	0.5	0.1	0.1 U	0.5	0.1	0.1 UJ	0.5	0.1	0.1 UJ	0.5	0.1	0.1 U	0.5	0.1
4-Methyl-2-Pentanone (MIBK)	19,000	5.0 U	5.0	0.97	1.0 U	5.0	1.0	1.0 U	5.0	1.0	1.0 U	5.0	1.0	1.0 U	5.0	1.0	1.0 U	5.0	1.0
Methylene Chloride	230	0.5 U	0.5	0.48	0.2 U	0.5	0.2	0.2 U	0.5	0.2	0.2 U	0.5	0.2	0.2 U	0.5	0.2	0.2 U	0.5	0.2
Naphthalene	26	0.5 U	0.5	0.12	0.1 U	0.5	0.1	0.1 U	0.5	0.1	0.1 U	0.5	0.1	0.1 U	0.5	0.1	0.1 U	0.5	0.1
n-Propylbenzene	530	0.2 U	0.2	0.02	0.1 U	0.5	0.1	0.1 U	0.5	0.1	0.1 U	0.5	0.1	0.1 U	0.5	0.1	0.1 U	0.5	0.1
Styrene	77,000	0.2 U	0.2	0.04	0.1 U	0.5	0.1	0.1 U	0.5	0.1	0.1 U	0.5	0.1	0.1 U	0.5	0.1	0.1 U	0.5	0.1
1,1,1,2-Tetrachloroethane	---	0.2 U	0.2	0.04	0.1 U	0.5	0.1	0.1 U	0.5	0.1	0.1 U	0.5	0.1	0.1 U	0.5	0.1	0.1 U	0.5	0.1
1,1,2,2-Tetrachloroethane	0.33	0.2 U	0.2	0.06	0.1 U	0.2	0.1	0.1 U	0.2	0.1	0.1 U	0.2	0.1	0.1 U	0.2	0.1	0.1 U	0.2	0.1
Tetrachloroethene	3.3	0.2 U	0.2	0.05	0.1 U	0.2	0.1	0.1 U	0.2	0.1	0.1 U	0.2	0.1	0.1 U	0.2	0.1	0.1 U	0.2	0.1
Toluene	1300	0.2 U	0.2	0.04	0.1 U	0.2	0.1	0.1 U	0.2	0.1	0.1 U	0.2	0.1	0.1 U	0.2	0.1	0.1 U	0.2	0.1
1,1,2-Trichloro-1,2,2-trifuoroethane	59,000	0.2 U	0.2	0.04	0.2 U	0.5	0.2	0.2 U	0.5	0.2	0.2 U	0.5	0.2	0.2 U	0.5	0.2	0.2 U	0.5	0.2
1,2,3-Trichlorobenzene	---	0.5 U	0.5	0.11	0.1 U	0.5	0.1	0.1 U	0.5	0.1	0.1 U	0.5	0.1	0.1 U	0.5	0.1	0.1 U	0.5	0.1

TABLE L-1
GROUNDWATER ANALYTICAL RESULTS
BOEING ISAACSON-THOMPSON
REMEDIAL INVESTIGATION

Location:		IT-I-104			IT-I-104			IT-DUP-2 (IT-I-104)			IT-I-104			IT-DUP-1 (IT-I-104)			IT-I-104		
Laboratory Sample ID:	Preliminary	UA54G/UA54P/UA55G/UA55O/UB47G/UB47O			6578917/6578918/UM31B			6578923/6578924/UM31E			6689134/6689135/6689136/UY55B			6689137/6689138/6689139/UY55C			6788036/6788037/6788038/VJ32C		
Laboratory Data Package ID:	Cleanup	UA54/UA55/UB47			1295418/UM31			1295418/UM31			1316071/UY55			1316071/UY55			1335483/VJ32		
Sample Date:	Levels	12/08/2011			3/13/2012			3/13/2012			6/14/2012			6/14/2012			9/12/2012		
		Result	Reporting Limit	Detection Limit	Result	Reporting Limit	Detection Limit	Result	Reporting Limit	Detection Limit	Result	Reporting Limit	Detection Limit	Result	Reporting Limit	Detection Limit	Result	Reporting Limit	Detection Limit
1,2,4-Trichlorobenzene	1.13	0.5 U	0.5	0.11	0.1 U	0.5	0.1	0.1 U	0.5	0.1	0.1 U	0.5	0.1	0.1 U	0.5	0.1	0.1 U	0.5	0.1
1,1,1-Trichloroethane	46,000	0.2 U	0.2	0.04	0.1 U	0.5	0.1	0.1 U	0.5	0.1	0.1 U	0.5	0.1	0.1 U	0.5	0.1	0.1 U	0.5	0.1
1,1,2-Trichloroethane	2.3	0.2 U	0.2	0.13	0.1 U	0.2	0.1	0.1 U	0.2	0.1	0.1 U	0.2	0.1	0.1 U	0.2	0.1	0.1 U	0.2	0.1
Trichloroethene	1.4	0.2 U	0.2	0.05	0.1 U	0.2	0.1	0.1 U	0.2	0.1	0.1 U	0.2	0.1	0.1 U	0.2	0.1	0.1 U	0.2	0.1
Trichlorofluoromethane	6900	0.2 U	0.2	0.04	0.1 U	0.5	0.1	0.1 U	0.5	0.1	0.1 U	0.5	0.1	0.1 U	0.5	0.1	0.1 U	0.5	0.1
1,2,3-Trichloropropane	---	0.5 U	0.5	0.13	0.3 U	1.0	0.3	0.3 U	1.0	0.3	0.3 U	1.0	0.3	0.3 U	1.0	0.3	0.3 U	1.0	0.3
1,2,4-Trimethylbenzene	303	0.2 U	0.2	0.02	0.1 U	0.5	0.1	0.1 U	0.5	0.1	0.1 U	0.5	0.1	0.1 U	0.5	0.1	0.1 U	0.5	0.1
1,3,5-Trimethylbenzene	303	0.2 U	0.2	0.02	0.1 U	0.5	0.1	0.1 U	0.5	0.1	0.1 U	0.5	0.1	0.1 U	0.5	0.1	0.1 U	0.5	0.1
Vinyl Acetate	---	1.0 UJ	1.0	0.07	0.2 U	0.5	0.2	0.2 U	0.5	0.2	0.2 U	0.5	0.2	0.2 U	0.5	0.2	0.2 U	0.5	0.2
Vinyl Chloride	0.53	0.2 U	0.2	0.06	0.1 U	0.2	0.1	0.1 U	0.2	0.1	0.1 U	0.2	0.1	**0.1** J1	0.2	0.1	0.1 U	0.2	0.1
m,p-Xylene	1300	0.4 U	0.4	0.05	0.1 U	0.5	0.1	0.1 U	0.5	0.1	0.1 U	0.5	0.1	0.1 U	0.5	0.1	0.1 U	0.5	0.1
o-Xylene	1600	0.2 U	0.2	0.04	0.1 U	0.5	0.1	0.1 U	0.5	0.1	0.1 U	0.5	0.1	0.1 U	0.5	0.1	0.1 U	0.5	0.1
2-Chloroethylvinylether	---	1.0 U	1.0	0.25	NA	NA	NA	NA	NA	NA	NA	NA	NA	NA	NA	NA	NA	NA	NA
Bromoethane	---	0.2 U	0.2	0.04	NA	NA	NA	NA	NA	NA	NA	NA	NA	NA	NA	NA	NA	NA	NA
VOLATILES (µg/L)																			
Method SW8260C-SIM																			
Tetrachloroethene	3.3	0.020 U	0.020	0.0036	0.010 UJ	0.020	0.010	0.010 U	0.020	0.010	**0.024**	0.020	0.010	**0.033**	0.020	0.010	0.010 U	0.020	0.010
Vinyl Chloride	0.53	**0.085**	0.020	0.0022	**0.090** J	0.020	0.010	**0.085**	0.020	0.010	**0.075**	0.020	0.010	**0.084**	0.020	0.010	**0.082**	0.020	0.010
Acrylonitrile	0.057	0.050 U	0.050	0.0158	NA	NA	NA	NA	NA	NA	NA	NA	NA	NA	NA	NA	NA	NA	NA
SEMIVOLATILES (µg/L)																			
Method SW8270D																			
Acenaphthene	120	1.0 U	1.0	0.55	0.1 U	0.5	0.1	0.09 U	0.5	0.09	0.1 U	0.5	0.1	0.1 U	0.5	0.1	0.09 U	0.5	0.09
Acenaphthylene	---	1.0 U	1.0	0.48	0.1 U	0.5	0.1	0.09 U	0.5	0.09	0.1 U	0.5	0.1	0.1 U	0.5	0.1	0.09 U	0.5	0.09
Anthracene	200	1.0 U	1.0	0.53	0.1 U	0.5	0.1	0.09 U	0.5	0.09	0.1 U	0.5	0.1	0.1 U	0.5	0.1	0.09 U	0.5	0.09
Benzo(a)anthracene	0.0018	1.0 U	1.0	0.52	0.1 U	0.5	0.1	0.09 U	0.5	0.09	0.1 U	0.5	0.1	0.1 U	0.5	0.1	0.09 U	0.5	0.09
Benzo(a)pyrene	0.00018	1.0 U	1.0	0.48	0.1 U	0.5	0.1	0.09 U	0.5	0.09	0.1 U	0.5	0.1	0.1 U	0.5	0.1	0.09 U	0.5	0.09
Benzo(b)fluoranthene	0.0018	NA	NA	NA	0.1 U	0.5	0.1	0.09 U	0.5	0.09	0.1 U	0.5	0.1	0.1 U	0.5	0.1	0.09 U	0.5	0.09
Benzo(g,h,i)perylene	---	1.0 U	1.0	0.55	0.1 U	0.5	0.1	0.09 U	0.5	0.09	0.1 U	0.5	0.1	0.1 U	0.5	0.1	0.09 U	0.5	0.09
Benzo(k)fluoranthene	0.0018	NA	NA	NA	0.1 U	0.5	0.1	0.09 U	0.5	0.09	0.1 U	0.5	0.1	0.1 U	0.5	0.1	0.09 U	0.5	0.09
Total Benzofluoranthenes	0.0018	1.0 U	1.0	0.48	NA	NA	NA	NA	NA	NA	NA	NA	NA	NA	NA	NA	NA	NA	NA
Benzoic Acid	2,240	10 U	10	5.1	6 UJ	15	6	6 UJ	14	6	6 U	15	6	6 U	15	6	6 U	14	6
Benzyl Alcohol	182	5.0 U	5.0	2.0	5 U	15	5	5 U	14	5	5 U	15	5	5 U	15	5	5 U	14	5
4-Bromophenyl-phenylether	---	1.0 U	1.0	0.42	0.5 U	1	0.5	0.5 U	0.9	0.5	0.5 U	1	0.5	0.5 U	1	0.5	0.5 U	0.9	0.5
Butylbenzylphthalate	0.41	1.0 U	1.0	0.56	2 U	5	2	2 U	5	2	2 U	5	2	2 U	5	2	2 U	5	2
Di-n-Butylphthalate	47	1.0 U	1.0	0.54	2 U	5	2	2 U	5	2	2 U	5	2	2 U	5	2	2 U	5	2
Carbazole	---	1.0 U	1.0	0.31	0.5 U	1	0.5	0.5 U	0.9	0.5	0.5 U	1	0.5	0.5 U	1	0.5	0.5 U	0.9	0.5
4-Chloro-3-methylphenol	3700	5.0 U	5.0	2.4	0.5 U	1	0.5	0.5 U	0.9	0.5	0.5 U	1	0.5	0.5 U	1	0.5	0.5 U	0.9	0.5
4-Chloroaniline	---	5.0 U	5.0	2.6	0.5 U	1	0.5	0.5 U	0.9	0.5	0.5 U	1	0.5	0.5 U	1	0.5	0.5 U	0.9	0.5
bis(2-Chloroethoxy) Methane	---	1.0 U	1.0	0.56	0.5 U	1	0.5	0.5 U	0.9	0.5	0.5 U	1	0.5	0.5 U	1	0.5	0.5 U	0.9	0.5
Bis-(2-Chloroethyl) Ether	---	1.0 U	1.0	0.58	0.5 U	1	0.5	0.5 U	0.9	0.5	0.5 U	1	0.5	0.5 U	1	0.5	0.5 U	0.9	0.5
2-Chloronaphthalene	---	1.0 U	1.0	0.48	0.4 U	1	0.4	0.4 U	0.9	0.4	0.4 U	1	0.4	0.4 U	1	0.4	0.4 U	0.9	0.4
2-Chlorophenol	---	1.0 U	1.0	0.53	0.5 U	1	0.5	0.5 U	0.9	0.5	0.5 U	1	0.5	0.5 U	1	0.5	0.5 U	0.9	0.5
4-Chlorophenyl-phenylether	---	1.0 U	1.0	0.45	0.5 U	1	0.5	0.5 U	0.9	0.5	0.5 U	1	0.5	0.5 U	1	0.5	0.5 U	0.9	0.5
2,2'-Oxybis(1-Chloropropane)	---	1.0 U	1.0	0.62	0.5 U	1	0.5	0.5 U	0.9	0.5	0.5 U	1	0.5	0.5 U	1	0.5	0.5 U	0.9	0.5
Chrysene	0.018	1.0 U	1.0	0.55	0.1 U	0.5	0.1	0.09 U	0.5	0.09	0.1 U	0.5	0.1	0.1 U	0.5	0.1	0.09 U	0.5	0.09
Dibenz(a,h)anthracene	0.0018	1.0 U	1.0	0.48	0.1 U	0.5	0.1	0.09 U	0.5	0.09	0.1 U	0.5	0.1	0.1 U	0.5	0.1	0.09 U	0.5	0.09
Dibenzofuran	1.3	1.0 U	1.0	0.48	0.5 U	1	0.5	0.5 U	0.9	0.5	0.5 U	1	0.5	0.5 U	1	0.5	0.5 U	0.9	0.5
1,2-Dichlorobenzene	440	1.0 U	1.0	0.36	0.5 U	1	0.5	0.5 U	0.9	0.5	0.5 U	1	0.5	0.5 U	1	0.5	0.5 U	0.9	0.5
1,3-Dichlorobenzene	---	1.0 U	1.0	0.36	0.5 U	1	0.5	0.5 U	0.9	0.5	0.5 U	1	0.5	0.5 U	1	0.5	0.5 U	0.9	0.5
1,4-Dichlorobenzene	1.7	1.0 U	1.0	0.40	0.5 U	1	0.5	0.5 U	0.9	0.5	0.5 U	1	0.5	0.5 U	1	0.5	0.5 U	0.9	0.5
3,3'-Dichlorobenzidine	---	5.0 U	5.0	1.5	2 U	5	2	2 U	5	2	2 U	5	2	2 U	5	2	2 U	5	2
2,4-Dichlorophenol	---	5.0 U	5.0	2.6	0.5 U	1	0.5	0.5 U	0.9	0.5	0.5 U	1	0.5	0.5 U	1	0.5	0.5 U	0.9	0.5
Diethylphthalate	4,236	1.0 U	1.0	0.58	2 U	5	2	2 U	5	2	2 U	5	2	2 U	5	2	2 U	5	2
2,4-Dimethylphenol	660	1.0 U	1.0	0.36	0.5 U	1	0.5	0.5 U	0.9	0.5	0.5 U	1	0.5	0.5 U	1	0.5	0.5 U	0.9	0.5
Dimethylphthalate	1,100,000	1.0 U	1.0	0.53	2 U	5	2	2 U	5	2	2 U	5	2	2 U	5	2	2 U	5	2
4,6-Dinitro-2-Methylphenol	---	10 U	10	3.1	5 U	15	5	5 U	14	5	5 U	15	5	5 U	15	5	5 U	14	5
2,4-Dinitrophenol	---	10 U	10	3.5	10 U	29	10	9 U	28	9	10 U	30	10	10 U	29	10	9 U	28	9
2,4-Dinitrotoluene	---	5.0 U	5.0	2.5	1 U	5	1	0.9 U	5	0.9	1 U	5	1	1 U	5	1	0.9 U	5	0.9
2,6-Dinitrotoluene	---	5.0 U	5.0	2.4	0.5 U	1	0.5	0.5 U	0.9	0.5	0.5 U	1	0.5	0.5 U	1	0.5	0.5 U	0.9	0.5
bis(2-Ethylhexyl)phthalate	1.2	1.0 U	1.0	1.9	2 U	5	2	2 U	5	2	2 U	5	2	2 U	5	2	2 U	5	2

TABLE L-1
GROUNDWATER ANALYTICAL RESULTS
BOEING ISAACSON-THOMPSON
REMEDIAL INVESTIGATION

Location:		IT-I-104			IT-I-104			IT-DUP-2 (IT-I-104)			IT-I-104			IT-DUP-1 (IT-I-104)			IT-I-104		
Laboratory Sample ID:	Preliminary	UA54G/UA54P/UA55G/UA55O/UB47G/UB47O			6578917/6578918/UM31B			6578923/6578924/UM31E			6689134/6689135/6689136/UY55B			6689137/6689138/6689139/UY55C			6788036/6788037/6788038/VJ32C		
Laboratory Data Package ID:	Cleanup	UA54/UA55/UB47			1295418/UM31			1295418/UM31			1316071/UY55			1316071/UY55			1335483/VJ32		
Sample Date:	Levels	12/08/2011			3/13/2012			3/13/2012			6/14/2012			6/14/2012			9/12/2012		
		Result	Reporting Limit	Detection Limit	Result	Reporting Limit	Detection Limit	Result	Reporting Limit	Detection Limit	Result	Reporting Limit	Detection Limit	Result	Reporting Limit	Detection Limit	Result	Reporting Limit	Detection Limit
Fluoranthene	11	1.0 U	1.0	0.52	0.1 U	0.5	0.1	0.09 U	0.5	0.09	0.1 U	0.5	0.1	0.1 U	0.5	0.1	0.09 U	0.5	0.09
Fluorene	45	1.0 U	1.0	0.56	0.1 U	0.5	0.1	0.09 U	0.5	0.09	0.1 U	0.5	0.1	0.1 U	0.5	0.1	0.09 U	0.5	0.09
Hexachlorobenzene	---	1.0 U	1.0	0.47	0.1 U	0.5	0.1	0.09 U	0.5	0.09	0.1 U	0.5	0.1	0.1 U	0.5	0.1	0.09 U	0.5	0.09
Hexachlorobutadiene	---	1.0 U	1.0	0.31	0.5 U	1	0.5	0.5 U	0.9	0.5	0.5 U	1	0.5	0.5 U	1	0.5	0.5 U	0.9	0.5
Hexachlorocyclopentadiene	---	5.0 U	5.0	1.2	5 U	15	5	5 U	14	5	5 U	15	5	5 U	15	5	5 U	14	5
Hexachloroethane	---	1.0 U	1.0	0.35	1 U	5	1	0.9 U	5	0.9	1 U	5	1	1 U	5	1	0.9 U	5	0.9
Indeno(1,2,3-cd)pyrene	0.0018	1.0 U	1.0	0.48	0.1 U	0.5	0.1	0.09 U	0.5	0.09	0.1 U	0.5	0.1	0.1 U	0.5	0.1	0.09 U	0.5	0.09
Isophorone	---	1.0 U	1.0	0.48	0.5 U	1	0.5	0.5 U	0.9	0.5	0.5 U	1	0.5	0.5 U	1	0.5	0.5 U	0.9	0.5
1-Methylnaphthalene	2.3	1.0 U	1.0	0.48	0.1 U	0.5	0.1	0.09 U	0.5	0.09	0.1 U	0.5	0.1	0.1 U	0.5	0.1	0.09 U	0.5	0.09
2-Methylnaphthalene	64	1.0 U	1.0	0.48	0.1 U	0.5	0.1	0.09 U	0.5	0.09	0.1 U	0.5	0.1	0.1 U	0.5	0.1	0.09 U	0.5	0.09
2-Methylphenol	3100	1.0 U	1.0	0.53	0.5 U	1	0.5	0.5 U	0.9	0.5	0.5 U	1	0.5	0.5 U	1	0.5	0.5 U	0.9	0.5
4-Methylphenol	330	1.0 U	1.0	0.52	0.5 U	1	0.5	0.5 U	0.9	0.5	0.5 U	1	0.5	0.5 U	1	0.5	0.5 U	0.9	0.5
Naphthalene	26	1.0 U	1.0	0.52	0.1 U	0.5	0.1	0.09 U	0.5	0.09	0.1 U	0.5	0.1	0.1 U	0.5	0.1	0.09 U	0.5	0.09
2-Nitroaniline	---	5.0 U	5.0	2.6	0.5 U	1	0.5	0.5 U	0.9	0.5	0.5 U	1	0.5	0.5 U	1	0.5	0.5 U	0.9	0.5
3-Nitroaniline	---	5.0 U	5.0	2.3	0.5 U	1	0.5	0.5 U	0.9	0.5	0.5 U	1	0.5	0.5 U	1	0.5	0.5 U	0.9	0.5
4-Nitroaniline	---	5.0 U	5.0	2.2	0.5 U	1	0.5	0.5 U	0.9	0.5	0.5 U	1	0.5	0.5 U	1	0.5	0.5 U	0.9	0.5
Nitrobenzene	---	1.0 U	1.0	0.58	0.5 U	1	0.5	0.5 U	0.9	0.5	0.5 U	1	0.5	0.5 U	1	0.5	0.5 U	0.9	0.5
2-Nitrophenol	---	5.0 U	5.0	2.0	0.5 U	1	0.5	0.5 U	0.9	0.5	0.5 U	1	0.5	0.5 U	1	0.5	0.5 U	0.9	0.5
4-Nitrophenol	---	5.0 U	5.0	2.6	10 U	29	10	9 U	28	9	10 U	30	10	10 U	29	10	9 U	28	9
N-Nitroso-Di-N-Propylamine	---	1.0 U	1.0	0.56	0.5 U	1	0.5	0.5 U	0.9	0.5	0.5 U	1	0.5	0.5 U	1	0.5	0.5 U	0.9	0.5
N-Nitrosodiphenylamine	1.96	1.0 U	1.0	0.46	0.5 U	1	0.5	0.5 U	0.9	0.5	0.5 U	1	0.5	0.5 U	1	0.5	0.5 U	0.9	0.5
Di-n-Octyl phthalate	---	1.0 U	1.0	0.51	2 U	5	2	2 U	5	2	2 U	5	2	2 U	5	2	2 U	5	2
Pentachlorophenol	---	5.0 U	5.0	2.4	1 U	5	1	0.9 U	5	0.9	1 U	5	1	1 U	5	1	0.9 U	5	0.9
Phenanthrene	---	1.0 U	1.0	0.56	0.1 U	0.5	0.1	0.09 U	0.5	0.09	0.1 U	0.5	0.1	0.1 U	0.5	0.1	0.09 U	0.5	0.09
Phenol	41,000	1.0 U	1.0	0.52	0.5 U	1	0.5	0.5 U	0.9	0.5	0.5 U	1	0.5	0.5 U	1	0.5	0.5 U	0.9	0.5
Pyrene	9.8	1.0 U	1.0	0.55	0.1 U	0.5	0.1	0.09 U	0.5	0.09	0.1 U	0.5	0.1	0.1 U	0.5	0.1	0.09 U	0.5	0.09
1,2,4-Trichlorobenzene	1.13	1.0 U	1.0	0.38	0.5 U	1	0.5	0.5 U	0.9	0.5	0.5 U	1	0.5	0.5 U	1	0.5	0.5 U	0.9	0.5
2,4,5-Trichlorophenol	---	5.0 U	5.0	2.2	0.5 U	1	0.5	0.5 U	0.9	0.5	0.5 U	1	0.5	0.5 U	1	0.5	0.5 U	0.9	0.5
2,4,6-Trichlorophenol	---	5.0 U	5.0	2.4	0.5 U	1	0.5	0.5 U	0.9	0.5	0.5 U	1	0.5	0.5 U	1	0.5	0.5 U	0.9	0.5
cPAHs (µg/L)																			
Method SW8270D-SIM																			
Benzo(a)anthracene	0.0018	0.010 U	0.010	0.0063	0.0054 U	0.011	0.0054	0.0050 U	0.0100	0.0050	0.0048 U	0.0096	0.0048	0.0048 U	0.0095	0.0048	0.0048 U	0.0095	0.0048
Benzo(a)pyrene	0.00018	0.010 U	0.010	0.0048	0.0054 U	0.011	0.0054	0.0050 U	0.0100	0.0050	0.0048 U	0.0096	0.0048	0.0048 U	0.0095	0.0048	0.0048 U	0.0095	0.0048
Benzo(b)fluoranthene	0.0018	NA	NA	NA	0.0054 U	0.011	0.0054	0.0050 U	0.0100	0.0050	0.0048 U	0.0096	0.0048	0.0048 U	0.0095	0.0048	0.0048 U	0.0095	0.0048
Benzo(k)fluoranthene	0.0018	NA	NA	NA	0.0054 U	0.011	0.0054	0.0050 U	0.0100	0.0050	0.0048 U	0.0096	0.0048	0.0048 U	0.0095	0.0048	0.0048 U	0.0095	0.0048
Total Benzofluoranthenes	0.0018	0.020 U	0.020	0.0099	NA	NA	NA	NA	NA	NA	NA	NA	NA	NA	NA	NA	NA	NA	NA
Chrysene	0.018	0.010 U	0.010	0.0046	0.0054 U	0.011	0.0054	0.0050 U	0.0100	0.0050	0.0048 U	0.0096	0.0048	0.0048 U	0.0095	0.0048	0.0048 U	0.0095	0.0048
Dibenz(a,h)anthracene	0.0018	0.010 U	0.010	0.0048	0.0043 U	0.011	0.0043	0.0040 U	0.0100	0.0040	0.0038 U	0.0096	0.0038	0.0038 U	0.0095	0.0038	0.0038 U	0.0095	0.0038
Indeno(1,2,3-cd)pyrene	0.0018	0.010 U	0.010	0.0046	0.0043 U	0.011	0.0043	0.0040 U	0.0100	0.0040	0.0038 U	0.0096	0.0038	0.0038 U	0.0095	0.0038	0.0038 U	0.0095	0.0038
Pyrene	9.8	NA	NA	NA	0.011 U	0.054	0.011	0.010 U	0.050	0.010	0.010 U	0.048	0.010	0.010 U	0.048	0.010	0.0095 U	0.047	0.0095
cPAH TEQ	0.00018	ND	NA	NA	ND	NA	NA	ND	NA	NA	ND	NA	NA	ND	NA	NA	ND	NA	NA
PCBs (µg/L)																			
Method SW8082																			
Aroclor 1016	0.000023	0.010 U	0.010	0.0025	0.0061 U	0.010	0.0061	0.0061 U	0.010	0.0061	0.0057 U	0.0095	0.0057	0.0057 U	0.0095	0.0057	0.0058 U	0.0097	0.0058
Aroclor 1221	---	0.010 U	0.010	0.0028	0.0061 U	0.010	0.0061	0.0061 U	0.010	0.0061	0.0057 U	0.0095	0.0057	0.0057 U	0.0095	0.0057	0.0058 U	0.0097	0.0058
Aroclor 1232	---	0.010 U	0.010	0.0028	0.0071 U	0.010	0.0071	0.0072 U	0.010	0.0072	0.0066 U	0.0095	0.0066	0.0067 U	0.0095	0.0067	0.0068 U	0.0097	0.0068
Aroclor 1242	0.000023	0.010 U	0.010	0.0028	0.0061 U	0.010	0.0061	0.0061 U	0.010	0.0061	0.0057 U	0.0095	0.0057	0.0057 U	0.0095	0.0057	0.0058 U	0.0097	0.0058
Aroclor 1248	0.000023	0.010 U	0.010	0.0028	0.0051 U	0.010	0.0051	0.0051 U	0.010	0.0051	0.0047 U	0.0095	0.0047	0.0048 U	0.0095	0.0048	0.0049 U	0.0097	0.0049
Aroclor 1254	0.0000055	0.010 U	0.010	0.0028	0.0051 U	0.010	0.0051	0.0051 U	0.010	0.0051	0.0047 U	0.0095	0.0047	0.0048 U	0.0095	0.0048	0.0049 U	0.0097	0.0049
Aroclor 1260	0.000023	0.010 U	0.010	0.0028	0.0051 U	0.010	0.0051	0.0051 U	0.010	0.0051	0.0047 U	0.0095	0.0047	**0.0075** J1	0.0095	0.0048	0.0049 U	0.0097	0.0049
Total PCBs	0.000023	ND	NA	NA	ND	NA	NA	ND	NA	NA	ND	NA	NA	**0.0075** J	NA	NA	ND	NA	NA

TABLE L-1
GROUNDWATER ANALYTICAL RESULTS
BOEING ISAACSON-THOMPSON
REMEDIAL INVESTIGATION

Location:		IT-I-104			IT-I-104			IT-DUP-2 (IT-I-104)			IT-I-104			IT-DUP-1 (IT-I-104)			IT-I-104		
Laboratory Sample ID:	Preliminary	UA54G/UA54P/UA55G/UA55O/UB47G/UB47O			6578917/6578918/UM31B			6578923/6578924/UM31E			6689134/6689135/6689136/UY55B			6689137/6689138/6689139/UY55C			6788036/6788037/6788038/VJ32C		
Laboratory Data Package ID:	Cleanup	UA54/UA55/UB47			1295418/UM31			1295418/UM31			1316071/UY55			1316071/UY55			1335483/VJ32		
Sample Date:	Levels	12/08/2011			3/13/2012			3/13/2012			6/14/2012			6/14/2012			9/12/2012		
		Result	Reporting Limit	Detection Limit	Result	Reporting Limit	Detection Limit	Result	Reporting Limit	Detection Limit	Result	Reporting Limit	Detection Limit	Result	Reporting Limit	Detection Limit	Result	Reporting Limit	Detection Limit
TOTAL PETROLEUM HYDROCARBONS (mg/L)																			
NWTPH-Dx																			
Diesel-Range Organics	0.5	0.10 U	0.10	0.022	0.073 U	0.26	0.073	0.067 U	0.24	0.067	0.029 U	0.097	0.029	0.025 U	0.095	0.028	0.029 U	0.097	0.029
Oil-Range Organics	0.5	0.20 U	0.20	0.044	1.0 U	3.1	1.0	0.95 U	2.9	0.95	0.068 U	0.240	0.068	0.066 U	0.240	0.066	0.068 U	0.240	0.068
NWTPH-G																			
Gasoline-Range Organics	1.0/0.8	0.25 U	0.25	0.06	0.05 U	0.25	0.05	0.05 U	0.25	0.05	0.05 U	0.25	0.05	0.05 U	0.25	0.05	0.05 U	0.25	0.05
TOTAL METALS (µg/L)																			
Method 200.8																			
Antimony	---	0.2 U	0.2	0.010	0.42 U	1.0	0.42	0.42 U	1.0	0.42	0.42 U	1.0	0.42	0.42 U	1.0	0.42	0.33 U	1.0	0.33
Arsenic	---	**2310**	5	1.20	**2900** J	10.0	4.8	**2140** J	10.0	4.8	**1140**	20.0	9.5	**988**	20.0	9.5	**1080**	10.0	2.0
Barium	---	**6.7**	0.5	0.020	**7.7**	2.0	0.69	**8.3**	2.0	0.69	**5.4**	2.0	0.69	**5.4**	2.0	0.69	**6.9**	2.0	0.41
Beryllium	---	0.2 U	0.2	0.021	0.13 U	0.50	0.13	0.13 U	0.50	0.13	0.13 U	0.50	0.13	0.13 U	0.50	0.13	**0.067** J1	0.50	0.025
Cadmium	---	0.1 U	0.1	0.010	0.20 U	0.50	0.20	0.20 U	0.50	0.20	0.20 U	0.50	0.20	0.20 U	0.50	0.20	0.082 U	0.50	0.082
Chromium	---	**2.6**	0.5	0.045	**4.4** J	2.0	0.60	**5.5** J	2.0	0.60	**3.4**	2.0	0.60	**3.8**	2.0	0.60	**2.0**	2.0	0.50
Copper	---	**18.5**	0.5	0.158	**5.4** J	2.0	0.38	**6.7** J	2.0	0.38	**10.7**	2.0	0.38	**11.9**	2.0	0.38	**4.0** J	2.0	0.40
Lead	---	**0.5**	0.1	0.046	**1.5** J	1.0	0.080	**1.9** J	1.0	0.080	**1.0**	1.0	0.080	**0.98** J1	1.0	0.080	**0.39** J1	1.0	0.034
Nickel	---	**0.9**	0.5	0.079	**0.80** J1	2.0	0.50	**0.91** J1	2.0	0.50	0.50 U	2.0	0.50	0.50 U	2.0	0.50	**0.36** J1	2.0	0.35
Selenium	---	0.5 U	0.5	0.127	0.27 U	2.0	0.27	0.27 U	2.0	0.27	0.27 U	2.0	0.27	0.27 U	2.0	0.27	0.50 U	2.0	0.50
Silver	---	0.2 U	0.2	0.008	0.098 U	0.50	0.098	0.098 U	0.50	0.098	0.098 U	0.50	0.098	0.098 U	0.50	0.098	0.10 U	0.50	0.10
Thallium	---	0.2 U	0.2	0.004	0.15 U	0.50	0.15	0.15 U	0.50	0.15	0.15 U	0.50	0.15	0.15 U	0.50	0.15	0.15 U	0.50	0.15
Zinc	---	**8**	4	0.50	**12.3** J, J1	15.0	4.0	**16.5** J	15.0	4.0	**12.3** J1	15.0	4.0	**14.8** J1	15.0	4.0	4.7 UJ2	15.0	1.1
Method SW7196A (mg/L)																			
Chromium VI	0.00058	0.010 U	0.010	0.00300	0.010 U	0.010	0.00300	0.010 U	0.010	0.00300	0.010 U	0.010	0.00300	0.010 U	0.010	0.00300	0.010 U	0.010	0.00300
Method SW7470A/EPA 1631E (ng/L)																			
Mercury	12	20.0 U	20.0	2.60	1.60 UJ	5.00	1.60	**8.08** J, J1	10.0	3.20	**12.8**	5.00	1.60	**10.6**	5.00	1.60	**5.14**	5.00	1.60
DISSOLVED METALS (µg/L)																			
Methods 200.8/SW7196A																			
Antimony	150	0.2 U	0.2	0.010	0.42 U	1.0	0.42	0.42 U	1.0	0.42	0.42 U	1.0	0.42	0.42 U	1.0	0.42	0.33 U	1.0	0.33
Arsenic	8	**2460**	5	1.20	**2180**	10.0	4.8	**2280**	10.0	4.8	**844** J	20.0	9.5	**1070** J	20.0	9.5	**1110**	10.0	2.0
Barium	770	**3.9**	0.5	0.020	**3.6**	2.0	0.69	**3.3**	2.0	0.69	**2.9**	2.0	0.69	**3.3**	2.0	0.69	**3.7**	2.0	0.41
Beryllium	12	0.2 U	0.2	0.021	0.13 U	0.50	0.13	0.13 U	0.50	0.13	0.13 U	0.50	0.13	0.13 U	0.50	0.13	**0.036** J1	0.50	0.025
Cadmium	0.25	0.1 U	0.1	0.010	0.20 U	0.50	0.20	0.20 U	0.50	0.20	0.20 U	0.50	0.20	0.20 U	0.50	0.20	0.082 U	0.50	0.082
Chromium	74	**3**	1	0.11	**3.4**	2.0	0.60	**3.2**	2.0	0.60	**3.1**	2.0	0.60	**3.0**	2.0	0.60	**2.0**	2.0	0.50
Copper	8	0.5 U	0.5	0.158	0.38 U	2.0	0.38	0.38 U	2.0	0.38	0.38 U	2.0	0.38	**2.2**	2.0	0.38	0.40 U	2.0	0.40
Lead	2.5	0.1 U	0.1	0.046	0.080 U	1.0	0.080	0.080 U	1.0	0.080	**0.66** J1	1.0	0.080	**0.15** J1	1.0	0.080	0.034 U	1.0	0.034
Nickel	8.2	**0.8**	0.5	0.079	0.50 U	2.0	0.50	0.50 U	2.0	0.50	0.50 U	2.0	0.50	0.50 U	2.0	0.50	**0.35** J1	2.0	0.35
Selenium	5	0.5 U	0.5	0.127	0.27 U	2.0	0.27	0.27 U	2.0	0.27	0.27 U	2.0	0.27	0.27 U	2.0	0.27	0.50 U	2.0	0.50
Silver	22	0.2 U	0.2	0.008	0.098 U	0.50	0.098	0.098 U	0.50	0.098	0.098 U	0.50	0.098	0.098 U	0.50	0.098	0.10 U	0.50	0.10
Thallium	0.47	0.2 U	0.2	0.004	0.15 U	0.50	0.15	0.15 U	0.50	0.15	0.15 U	0.50	0.15	0.15 U	0.50	0.15	0.15 U	0.50	0.15
Zinc	56	4 U	4	0.50	4.0 U	15.0	4.0	4.0 U	15.0	4.0	4.0 U	15.0	4.0	4.0 U	15.0	4.0	1.1 U	15.0	1.1
Method SW7470A/EPA 1631E (ng/L)																			
Mercury	12	20.0 U	20.0	2.60	**3.01** J1	5.00	1.60	1.60 U	5.00	1.60	**2.38**	5.00	1.60	**3.26** J1	5.00	1.60	**0.631**	0.500	0.160
CONVENTIONALS (mg/L)																			
Chloride (Method 300.0)	---	NA	NA	NA	NA	NA	NA	NA	NA	NA	**6.5**	2.0	1.0	**6.5**	2.0	1.0	**39.2** J	4.0	2.0
Nitrate (Method 300.0)	---	0.1 U	0.1	0.007	0.050 U	0.10	0.050	0.050 U	0.10	0.050	0.050 U	0.10	0.050	0.050 U	0.10	0.050	0.050 U	0.10	0.050
Sulfate (Method 300.0)	---	**3.8**	0.1	0.059	**0.67** J1	1.0	0.30	**0.66** J1	1.0	0.30	**0.84** J1	1.0	0.30	**0.96** J1	1.0	0.30	**4.1** J	1.0	0.30
Total Dissolved Solids (Method 160.1)	---	**412**	10.0	10.0	**409**	30.0	9.7	**411**	30.0	9.7	**370**	30.0	9.7	**358**	30.0	9.7	**368**	30.0	9.7
FIELD PARAMETERS																			
Temperature (°C)	---	14.89	NA	NA	13.35	NA	NA	13.35	NA	NA	14.07	NA	NA	14.07	NA	NA	13.54	NA	NA
Conductivity (uS/cm)	---	1494	NA	NA	527	NA	NA	527	NA	NA	373	NA	NA	373	NA	NA	535	NA	NA
Dissolved Oxygen (mg/L)	---	1.21	NA	NA	0.42	NA	NA	0.42	NA	NA	0.60	NA	NA	0.60	NA	NA	1.28	NA	NA
pH (SU)	---	6.31	NA	NA	5.42	NA	NA	5.42	NA	NA	9.01	NA	NA	9.01	NA	NA	6.67	NA	NA
ORP (mV)	---	-47.5	NA	NA	-154.0	NA	NA	-154.0	NA	NA	-98.1	NA	NA	-98.1	NA	NA	-128	NA	NA
Turbidity (NTU)	---	4.45	NA	NA	2.75	NA	NA	2.75	NA	NA	4.29	NA	NA	4.29	NA	NA	47.2	NA	NA
Ferrous Iron (mg/L)	---	NA	NA	NA	1.6	NA	NA	1.6	NA	NA	1.0	NA	NA	1.0	NA	NA	3.6	NA	NA

TABLE L-1
GROUNDWATER ANALYTICAL RESULTS
BOEING ISAACSON-THOMPSON
REMEDIAL INVESTIGATION

Location:		IT-DUP-1 (IT-I-104)			IT-I-200			IT-I-200			IT-I-200			IT-I-200			IT-I-203		
Laboratory Sample ID:	Preliminary	6788054/678805/6788056/VJ32J			UA86B/UA86F/UA87B/UA87E			6568988/6568989/UK92A			6686960/6686961/6686962/UY34B			6787989/6787990/6787991/VJ03A			UA44D/UA44L/UA45D/UA45K/UB46D/UB46K		
Laboratory Data Package ID:	Cleanup	1335483/VJ32			UA86/UA87			1293530/UK92			1315688/UY34			1335480/VJ03			UA44/UA45/UB46		
Sample Date:	Levels	9/12/2012			12/12/2011			03/06/2012			6/13/2012			9/11/2012			12/07/2011		
		Result	Reporting Limit	Detection Limit	Result	Reporting Limit	Detection Limit	Result	Reporting Limit	Detection Limit	Result	Reporting Limit	Detection Limit	Result	Reporting Limit	Detection Limit	Result	Reporting Limit	Detection Limit
VOLATILES (µg/L)																			
Method SW8260C																			
Acetone	110,000	3.0 U	5.0	3.0	5.0 U	5.0	2.1	3.0 U	5.0	3.0	3.0 U	5.0	3.0	3.0 U	5.0	3.0	5.0 U	5.0	2.1
Acrolein	---	5.0 U	25	5.0	5.0 U	5	2.5	5.0 U	25	5.0	5.0 U	25	5.0	5.0 U	25	5.0	5.0 UJ	5.0	2.5
Acrylonitrile	0.057	1.0 U	5.0	1.0	1.0 U	1.0	0.60	1.0 U	5.0	1.0	1.0 U	5.0	1.0	1.0 U	5.0	1.0	1.0 U	1.0	0.60
Benzene	2	0.1 U	0.2	0.1	0.2 U	0.2	0.03	0.1 U	0.2	0.1	0.1 U	0.2	0.1	0.1 U	0.2	0.1	0.2 U	0.2	0.03
Bromobenzene	---	0.1 U	0.5	0.1	0.2 U	0.2	0.06	0.1 U	0.5	0.1	0.1 U	0.5	0.1	0.1 U	0.5	0.1	0.2 U	0.2	0.06
Bromochloromethane	---	0.1 U	0.5	0.1	0.2 U	0.2	0.06	0.1 U	0.5	0.1	0.1 U	0.5	0.1	0.1 U	0.5	0.1	0.2 U	0.2	0.06
Bromodichloromethane	17	0.1 U	0.5	0.1	0.2 U	0.2	0.05	0.1 U	0.5	0.1	0.1 U	0.5	0.1	0.1 U	0.5	0.1	0.2 U	0.2	0.05
Bromoform	---	0.1 U	0.5	0.1	0.2 UJ	0.2	0.06	0.1 U	0.5	0.1	0.1 U	0.5	0.1	0.1 U	0.5	0.1	0.2 U	0.2	0.06
Bromomethane	---	0.1 U	0.5	0.1	1.0 U	1.0	0.25	0.1 U	0.5	0.1	0.1 U	0.5	0.1	0.1 U	0.5	0.1	1.0 U	1.0	0.25
2-Butanone	73,000	1.0 U	5.0	1.0	5.0 U	5.0	0.81	1.0 U	5.0	1.0	1.0 U	5.0	1.0	1.0 U	5.0	1.0	5.0 UJ	5.0	0.81
n-Butylbenzene	780	0.1 U	0.5	0.1	0.2 U	0.2	0.02	0.1 U	0.5	0.1	0.1 U	0.5	0.1	0.1 U	0.5	0.1	0.2 U	0.2	0.02
sec-Butylbenzene	---	0.1 U	0.5	0.1	0.2 U	0.2	0.02	0.1 U	0.5	0.1	0.1 U	0.5	0.1	0.1 U	0.5	0.1	0.2 U	0.2	0.02
tert-Butylbenzene	---	0.1 U	0.5	0.1	0.2 U	0.2	0.03	0.1 U	0.5	0.1	0.1 U	0.5	0.1	0.1 U	0.5	0.1	0.2 U	0.2	0.03
Carbon Disulfide	3900	0.4 U	0.5	0.4	0.2 U	0.2	0.04	0.4 U	0.5	0.4	0.4 U	0.5	0.4	0.4 U	0.5	0.4	**0.2**	0.2	0.04
Carbon Tetrachloride	0.46	0.1 U	0.2	0.1	0.2 U	0.2	0.04	0.1 U	0.2	0.1	0.1 U	0.2	0.1	0.1 U	0.2	0.1	0.2 U	0.2	0.04
Chlorobenzene	270	0.1 U	0.5	0.1	0.2 U	0.2	0.02	0.1 U	0.5	0.1	0.1 U	0.5	0.1	0.1 U	0.5	0.1	0.2 U	0.2	0.02
Chloroethane	21,000	0.1 U	0.5	0.1	0.2 U	0.2	0.09	0.1 U	0.5	0.1	0.1 U	0.5	0.1	0.1 U	0.5	0.1	0.2 U	0.2	0.09
Chloroform	9.4	0.1 U	0.2	0.1	0.2 U	0.2	0.03	0.1 U	0.2	0.1	0.1 U	0.2	0.1	0.1 U	0.2	0.1	0.2 U	0.2	0.03
Chloromethane	10.3	0.2 U	0.5	0.2	0.5 U	0.5	0.10	0.2 U	0.5	0.2	0.2 U	0.5	0.2	0.2 U	0.5	0.2	0.5 U	0.5	0.10
2-Chlorotoluene	---	0.1 U	0.5	0.1	0.2 U	0.2	0.02	0.1 U	0.5	0.1	0.1 U	0.5	0.1	0.1 U	0.5	0.1	0.2 U	0.2	0.02
4-Chlorotoluene	2600	0.1 U	0.5	0.1	0.2 U	0.2	0.02	0.1 U	0.5	0.1	0.1 U	0.5	0.1	0.1 U	0.5	0.1	0.2 U	0.2	0.02
1,2-Dibromo-3-chloropropane	---	0.2 U	0.5	0.2	0.5 U	0.5	0.04	0.2 U	0.5	0.2	0.2 U	0.5	0.2	0.2 U	0.5	0.2	0.5 U	0.5	0.04
Dibromochloromethane	---	0.1 U	0.5	0.1	0.2 U	0.2	0.05	0.1 U	0.5	0.1	0.1 U	0.5	0.1	0.1 U	0.5	0.1	0.2 U	0.2	0.05
Dibromomethane	---	0.1 U	0.5	0.1	0.2 U	0.2	0.14	0.1 U	0.5	0.1	0.1 U	0.5	0.1	0.1 U	0.5	0.1	0.2 U	0.2	0.14
trans-1,4-Dichloro-2-butene	---	1.0 U	5.0	1.0	1.0 UJ	1.0	0.32	1.0 U	5.0	1.0	1.0 U	5.0	1.0	1.0 U	5.0	1.0	1.0 UJ	1.0	0.32
1,2-Dichlorobenzene	440	0.1 U	0.5	0.1	0.2 U	0.2	0.04	0.1 U	0.5	0.1	0.1 U	0.5	0.1	0.1 U	0.5	0.1	0.2 U	0.2	0.04
1,3-Dichlorobenzene	960	0.1 U	0.5	0.1	0.2 U	0.2	0.04	0.1 U	0.5	0.1	0.1 U	0.5	0.1	0.1 U	0.5	0.1	0.2 U	0.2	0.04
1,4-Dichlorobenzene	1.7	0.1 U	0.5	0.1	0.2 U	0.2	0.04	0.1 U	0.5	0.1	0.1 U	0.5	0.1	0.1 U	0.5	0.1	0.2 U	0.2	0.04
1,1-Dichloroethane	33	0.1 U	0.5	0.1	0.2 U	0.2	0.05	0.1 U	0.5	0.1	0.1 U	0.5	0.1	0.1 U	0.5	0.1	0.2 U	0.2	0.05
1,2-Dichloroethane	3.6	0.1 U	0.2	0.1	0.2 U	0.2	0.07	0.1 U	0.2	0.1	0.1 U	0.2	0.1	0.1 U	0.2	0.1	0.2 U	0.2	0.07
1,1-Dichloroethene	3.2	0.1 U	0.2	0.1	0.2 U	0.2	0.05	0.1 U	0.2	0.1	0.1 U	0.2	0.1	0.1 U	0.2	0.1	0.2 U	0.2	0.05
cis-1,2-Dichloroethene	130	**0.2** J1	0.2	0.1	0.2 U	0.2	0.04	0.1 U	0.2	0.1	0.1 U	0.2	0.1	0.1 U	0.2	0.1	0.2 U	0.2	0.04
trans-1,2-Dichloroethene	940	0.1 U	0.2	0.1	0.2 U	0.2	0.05	0.1 U	0.2	0.1	0.1 U	0.2	0.1	0.1 U	0.2	0.1	0.2 U	0.2	0.05
1,2-Dichloropropane	3.7	0.1 U	0.5	0.1	0.2 U	0.2	0.04	0.1 U	0.5	0.1	0.1 U	0.5	0.1	0.1 U	0.5	0.1	0.2 U	0.2	0.04
1,3-Dichloropropane	---	0.1 U	0.5	0.1	0.2 U	0.2	0.06	0.1 U	0.5	0.1	0.1 U	0.5	0.1	0.1 U	0.5	0.1	0.2 U	0.2	0.06
2,2-Dichloropropane	---	0.1 U	0.5	0.1	0.2 U	0.2	0.05	0.1 U	0.5	0.1	0.1 U	0.5	0.1	0.1 U	0.5	0.1	0.2 U	0.2	0.05
1,1-Dichloropropene	---	0.1 U	0.5	0.1	0.2 U	0.2	0.03	0.1 U	0.5	0.1	0.1 U	0.5	0.1	0.1 U	0.5	0.1	0.2 U	0.2	0.03
cis-1,3-Dichloropropene	---	0.1 U	0.2	0.1	0.2 U	0.2	0.06	0.1 U	0.2	0.1	0.1 U	0.2	0.1	0.1 U	0.2	0.1	0.2 U	0.2	0.06
trans-1,3-Dichloropropene	---	0.1 U	0.2	0.1	0.2 U	0.2	0.08	0.1 U	0.2	0.1	0.1 U	0.2	0.1	0.1 U	0.2	0.1	0.2 U	0.2	0.08
Ethylbenzene	1.7	0.1 U	0.5	0.1	0.2 U	0.2	0.04	0.1 U	0.5	0.1	0.1 U	0.5	0.1	0.1 U	0.5	0.1	0.2 U	0.2	0.04
Ethylene Dibromide	---	0.1 U	0.5	0.1	0.2 U	0.2	0.08	0.1 U	0.5	0.1	0.1 U	0.5	0.1	0.1 U	0.5	0.1	0.2 U	0.2	0.08
Hexachlorobutadiene	---	0.1 U	0.5	0.1	0.5 U	0.5	0.07	0.1 U	0.5	0.1	0.1 U	0.5	0.1	0.1 U	0.5	0.1	0.5 U	0.5	0.07
2-Hexanone	3200	1.0 U	5.0	1.0	5.0 U	5.0	0.90	1.0 U	5.0	1.0	1.0 U	5.0	1.0	1.0 U	5.0	1.0	5.0 U	5.0	0.90
Isopropylbenzene	270	0.1 U	0.5	0.1	0.2 U	0.2	0.02	0.1 U	0.5	0.1	0.1 U	0.5	0.1	0.1 U	0.5	0.1	0.2 U	0.2	0.02
4-Isopropyltoluene	---	0.1 U	0.5	0.1	0.2 U	0.2	0.03	0.1 U	0.5	0.1	0.1 U	0.5	0.1	0.1 U	0.5	0.1	0.2 U	0.2	0.03
Methyl Iodide	---	0.1 U	0.5	0.1	1.0 U	1.0	0.23	0.1 U	0.5	0.1	0.1 U	0.5	0.1	0.1 U	0.5	0.1	1.0 U	1.0	0.23
4-Methyl-2-Pentanone (MIBK)	19,000	1.0 U	5.0	1.0	5.0 U	5.0	0.97	1.0 U	5.0	1.0	1.0 U	5.0	1.0	1.0 U	5.0	1.0	5.0 U	5.0	0.97
Methylene Chloride	230	0.2 U	0.5	0.2	0.5 U	0.5	0.48	0.2 U	0.5	0.2	0.2 U	0.5	0.2	0.2 U	0.5	0.2	0.5 U	0.5	0.48
Naphthalene	26	0.1 U	0.5	0.1	0.5 U	0.5	0.12	0.1 U	0.5	0.1	0.1 U	0.5	0.1	0.1 U	0.5	0.1	0.5 U	0.5	0.12
n-Propylbenzene	530	0.1 U	0.5	0.1	0.2 U	0.2	0.02	0.1 U	0.5	0.1	0.1 U	0.5	0.1	0.1 U	0.5	0.1	0.2 U	0.2	0.02
Styrene	77,000	0.1 U	0.5	0.1	0.2 U	0.2	0.04	0.1 U	0.5	0.1	0.1 U	0.5	0.1	0.1 U	0.5	0.1	0.2 U	0.2	0.04
1,1,1,2-Tetrachloroethane	---	0.1 U	0.5	0.1	0.2 U	0.2	0.04	0.1 U	0.5	0.1	0.1 U	0.5	0.1	0.1 U	0.5	0.1	0.2 U	0.2	0.04
1,1,2,2-Tetrachloroethane	0.33	0.1 U	0.2	0.1	0.2 U	0.2	0.06	0.1 U	0.2	0.1	0.1 U	0.2	0.1	0.1 U	0.2	0.1	0.2 U	0.2	0.06
Tetrachloroethene	3.3	0.1 U	0.2	0.1	0.2 U	0.2	0.05	0.1 U	0.2	0.1	**0.3**	0.2	0.1	0.1 U	0.2	0.1	0.2 U	0.2	0.05
Toluene	1300	0.1 U	0.2	0.1	0.2 U	0.2	0.04	0.1 U	0.2	0.1	0.1 U	0.2	0.1	0.1 U	0.2	0.1	0.2 U	0.2	0.04
1,1,2-Trichloro-1,2,2-trifuoroethane	59,000	0.2 U	0.5	0.2	0.2 U	0.2	0.04	0.2 U	0.5	0.2	0.2 U	0.5	0.2	0.2 U	0.5	0.2	0.2 U	0.2	0.04
1,2,3-Trichlorobenzene	---	0.1 U	0.5	0.1	0.5 U	0.5	0.11	0.1 U	0.5	0.1	0.1 U	0.5	0.1	0.1 U	0.5	0.1	0.5 U	0.5	0.11

TABLE L-1
GROUNDWATER ANALYTICAL RESULTS
BOEING ISAACSON-THOMPSON
REMEDIAL INVESTIGATION

Location:		IT-DUP-1 (IT-I-104)			IT-I-200			IT-I-200			IT-I-200			IT-I-200			IT-I-203		
Laboratory Sample ID:	Preliminary	6788054/678805/6788056/VJ32J			UA86B/UA86F/UA87B/UA87E			6568988/6568989/UK92A			6686960/6686961/6686962/UY34B			6787989/6787990/6787991/VJ03A			UA44D/UA44L/UA45D/UA45K/UB46D/UB46K		
Laboratory Data Package ID:	Cleanup	1335483/VJ32			UA86/UA87			1293530/UK92			1315688/UY34			1335480/VJ03			UA44/UA45/UB46		
Sample Date:	Levels	9/12/2012			12/12/2011			03/06/2012			6/13/2012			9/11/2012			12/07/2011		
		Result	Reporting Limit	Detection Limit	Result	Reporting Limit	Detection Limit	Result	Reporting Limit	Detection Limit	Result	Reporting Limit	Detection Limit	Result	Reporting Limit	Detection Limit	Result	Reporting Limit	Detection Limit
1,2,4-Trichlorobenzene	1.13	0.1 U	0.5	0.1	0.5 U	0.5	0.11	0.1 U	0.5	0.1	0.1 U	0.5	0.1	0.1 U	0.5	0.1	0.5 U	0.5	0.11
1,1,1-Trichloroethane	46,000	0.1 U	0.5	0.1	0.2 U	0.2	0.04	0.1 U	0.5	0.1	0.1 U	0.5	0.1	0.1 U	0.5	0.1	0.2 U	0.2	0.04
1,1,2-Trichloroethane	2.3	0.1 U	0.2	0.1	0.2 U	0.2	0.13	0.1 U	0.2	0.1	0.1 U	0.2	0.1	0.1 U	0.2	0.1	0.2 U	0.2	0.13
Trichloroethene	1.4	0.1 U	0.2	0.1	0.2 U	0.2	0.05	0.1 U	0.2	0.1	0.1 U	0.2	0.1	0.1 U	0.2	0.1	0.2 U	0.2	0.05
Trichlorofluoromethane	6900	0.1 U	0.5	0.1	0.2 U	0.2	0.04	0.1 U	0.5	0.1	0.1 U	0.5	0.1	0.1 U	0.5	0.1	0.2 U	0.2	0.04
1,2,3-Trichloropropane	---	0.3 U	1.0	0.3	0.5 U	0.5	0.13	0.3 U	1.0	0.3	0.3 U	1.0	0.3	0.3 U	1.0	0.3	0.5 U	0.5	0.13
1,2,4-Trimethylbenzene	303	0.1 U	0.5	0.1	0.2 U	0.2	0.02	0.1 U	0.5	0.1	0.1 U	0.5	0.1	0.1 U	0.5	0.1	0.2 U	0.2	0.02
1,3,5-Trimethylbenzene	303	0.1 U	0.5	0.1	0.2 U	0.2	0.02	0.1 U	0.5	0.1	0.1 U	0.5	0.1	0.1 U	0.5	0.1	0.2 U	0.2	0.02
Vinyl Acetate	---	0.2 U	0.5	0.2	1.0 U	1.0	0.07	0.2 U	0.5	0.2	0.2 U	0.5	0.2	0.2 U	0.5	0.2	1.0 UJ	1.0	0.07
Vinyl Chloride	0.53	0.1 U	0.2	0.1	0.2 U	0.2	0.06	0.1 U	0.2	0.1	0.1 U	0.2	0.1	0.1 U	0.2	0.1	0.2 U	0.2	0.06
m,p-Xylene	1300	0.1 U	0.5	0.1	0.4 U	0.4	0.05	0.1 U	0.5	0.1	0.1 U	0.5	0.1	0.1 U	0.5	0.1	0.4 U	0.4	0.05
o-Xylene	1600	0.1 U	0.5	0.1	0.2 U	0.2	0.04	0.1 U	0.5	0.1	0.1 U	0.5	0.1	0.1 U	0.5	0.1	0.2 U	0.2	0.04
2-Chloroethylvinylether	---	NA	NA	NA	1.0 UJ	1.0	0.25	NA	NA	NA	NA	NA	NA	NA	NA	NA	1.0 U	1.0	0.25
Bromoethane	---	NA	NA	NA	0.2 U	0.2	0.04	NA	NA	NA	NA	NA	NA	NA	NA	NA	0.2 U	0.2	0.04
VOLATILES (µg/L)																			
Method SW8260C-SIM																			
Tetrachloroethene	3.3	0.010 U	0.020	0.010	0.020 U	0.020	0.0036	0.010 U	0.020	0.010	**0.011** J1	0.020	0.010	0.010 U	0.020	0.010	0.020 U	0.020	0.0036
Vinyl Chloride	0.53	**0.091**	0.020	0.010	0.020 U	0.020	0.0022	0.010 U	0.020	0.010	0.010 U	0.020	0.010	**0.020**	0.020	0.010	0.020 U	0.020	0.0022
Acrylonitrile	0.057	NA	NA	NA	0.050 U	0.050	0.0158	NA	NA	NA	NA	NA	NA	NA	NA	NA	0.050 U	0.050	0.0158
SEMIVOLATILES (µg/L)																			
Method SW8270D																			
Acenaphthene	120	0.1 U	0.5	0.1	1.0 U	1.0	0.55	0.1 U	0.5	0.1	0.1 U	0.5	0.1	0.09 U	0.5	0.09	1.0 U	1.0	0.55
Acenaphthylene	---	0.1 U	0.5	0.1	1.0 U	1.0	0.48	0.1 U	0.5	0.1	0.1 U	0.5	0.1	0.09 U	0.5	0.09	1.0 U	1.0	0.48
Anthracene	200	0.1 U	0.5	0.1	1.0 U	1.0	0.53	0.1 U	0.5	0.1	0.1 U	0.5	0.1	0.09 U	0.5	0.09	1.0 U	1.0	0.53
Benzo(a)anthracene	0.0018	0.1 U	0.5	0.1	1.0 U	1.0	0.52	0.1 U	0.5	0.1	0.1 U	0.5	0.1	0.09 U	0.5	0.09	1.0 U	1.0	0.52
Benzo(a)pyrene	0.00018	0.1 U	0.5	0.1	1.0 U	1.0	0.48	0.1 U	0.5	0.1	0.1 U	0.5	0.1	0.09 U	0.5	0.09	1.0 U	1.0	0.48
Benzo(b)fluoranthene	0.0018	0.1 U	0.5	0.1	NA	NA	NA	0.1 U	0.5	0.1	0.1 U	0.5	0.1	0.09 U	0.5	0.09	NA	NA	NA
Benzo(g,h,i)perylene	---	0.1 U	0.5	0.1	1.0 U	1.0	0.55	0.1 U	0.5	0.1	0.1 U	0.5	0.1	0.09 U	0.5	0.09	1.0 U	1.0	0.55
Benzo(k)fluoranthene	0.0018	0.1 U	0.5	0.1	NA	NA	NA	0.1 U	0.5	0.1	0.1 U	0.5	0.1	0.09 U	0.5	0.09	NA	NA	NA
Total Benzofluoranthenes	0.0018	NA	NA	NA	1.0 U	1.0	0.48	NA	NA	NA	NA	NA	NA	NA	NA	NA	1.0 U	1.0	0.48
Benzoic Acid	2,240	6 UJ	14	6	10 U	10	5.1	6 UJ	14	6	6 U	15	6	6 U	14	6	10 U	10	5.1
Benzyl Alcohol	182	5 U	14	5	5.0 U	5.0	2.0	5 U	14	5	5 U	15	5	5 U	14	5	5.0 U	5.0	2.0
4-Bromophenyl-phenylether	---	0.5 U	1	0.5	1.0 U	1.0	0.42	0.5 U	1	0.5	0.5 U	1	0.5	0.5 U	0.9	0.5	1.0 U	1.0	0.42
Butylbenzylphthalate	0.41	2 U	5	2	1.0 U	1.0	0.56	2 U	5	2	2 U	5	2	2 U	5	2	1.0 U	1.0	0.56
Di-n-Butylphthalate	47	2 U	5	2	1.0 U	1.0	0.54	2 U	5	2	2 U	5	2	2 U	5	2	1.0 U	1.0	0.54
Carbazole	---	0.5 U	1	0.5	1.0 U	1.0	0.31	0.5 U	1	0.5	0.5 U	1	0.5	0.5 U	0.9	0.5	1.0 U	1.0	0.31
4-Chloro-3-methylphenol	3700	0.5 U	1	0.5	5.0 U	5.0	2.4	0.5 U	1	0.5	0.5 U	1	0.5	0.5 U	0.9	0.5	5.0 U	5.0	2.4
4-Chloroaniline	---	0.5 U	1	0.5	5.0 U	5.0	2.6	0.5 U	1	0.5	0.5 U	1	0.5	0.5 U	0.9	0.5	5.0 U	5.0	2.6
bis(2-Chloroethoxy) Methane	---	0.5 U	1	0.5	1.0 U	1.0	0.56	0.5 U	1	0.5	0.5 U	1	0.5	0.5 U	0.9	0.5	1.0 U	1.0	0.56
Bis-(2-Chloroethyl) Ether	---	0.5 U	1	0.5	1.0 U	1.0	0.58	0.5 U	1	0.5	0.5 U	1	0.5	0.5 U	0.9	0.5	1.0 U	1.0	0.58
2-Chloronaphthalene	---	0.4 U	1	0.4	1.0 U	1.0	0.48	0.4 U	1	0.4	0.4 U	1	0.4	0.4 U	0.9	0.4	1.0 U	1.0	0.48
2-Chlorophenol	---	0.5 U	1	0.5	1.0 U	1.0	0.53	0.5 U	1	0.5	0.5 U	1	0.5	0.5 U	0.9	0.5	1.0 U	1.0	0.53
4-Chlorophenyl-phenylether	---	0.5 U	1	0.5	1.0 U	1.0	0.45	0.5 U	1	0.5	0.5 U	1	0.5	0.5 U	0.9	0.5	1.0 U	1.0	0.45
2,2'-Oxybis(1-Chloropropane)	---	0.5 U	1	0.5	1.0 U	1.0	0.62	0.5 U	1	0.5	0.5 U	1	0.5	0.5 U	0.9	0.5	1.0 U	1.0	0.62
Chrysene	0.018	0.1 U	0.5	0.1	1.0 U	1.0	0.55	0.1 U	0.5	0.1	0.1 U	0.5	0.1	0.09 U	0.5	0.09	1.0 U	1.0	0.55
Dibenz(a,h)anthracene	0.0018	0.1 U	0.5	0.1	1.0 U	1.0	0.48	0.1 U	0.5	0.1	0.1 U	0.5	0.1	0.09 U	0.5	0.09	1.0 U	1.0	0.48
Dibenzofuran	1.3	0.5 U	1	0.5	1.0 U	1.0	0.48	0.5 U	1	0.5	0.5 U	1	0.5	0.5 U	0.9	0.5	1.0 U	1.0	0.48
1,2-Dichlorobenzene	440	0.5 U	1	0.5	1.0 U	1.0	0.36	0.5 U	1	0.5	0.5 U	1	0.5	0.5 U	0.9	0.5	1.0 U	1.0	0.36
1,3-Dichlorobenzene	---	0.5 U	1	0.5	1.0 U	1.0	0.36	0.5 U	1	0.5	0.5 U	1	0.5	0.5 U	0.9	0.5	1.0 U	1.0	0.36
1,4-Dichlorobenzene	1.7	0.5 U	1	0.5	1.0 U	1.0	0.40	0.5 U	1	0.5	0.5 U	1	0.5	0.5 U	0.9	0.5	1.0 U	1.0	0.40
3,3'-Dichlorobenzidine	---	2 U	5	2	5.0 U	5.0	1.5	2 U	5	2	2 U	5	2	2 U	5	2	5.0 U	5.0	1.5
2,4-Dichlorophenol	---	0.5 U	1	0.5	5.0 U	5.0	2.6	0.5 U	1	0.5	0.5 U	1	0.5	0.5 U	0.9	0.5	5.0 U	5.0	2.6
Diethylphthalate	4,236	2 U	5	2	1.0 U	1.0	0.58	2 U	5	2	2 U	5	2	2 U	5	2	1.0 U	1.0	0.58
2,4-Dimethylphenol	660	0.5 U	1	0.5	1.0 U	1.0	0.36	0.5 U	1	0.5	0.5 U	1	0.5	0.5 U	0.9	0.5	1.0 U	1.0	0.36
Dimethylphthalate	1,100,000	2 U	5	2	1.0 U	1.0	0.53	2 U	5	2	2 U	5	2	2 U	5	2	1.0 U	1.0	0.53
4,6-Dinitro-2-Methylphenol	---	5 U	14	5	10 U	10	3.1	5 U	14	5	5 U	15	5	5 U	14	5	10 U	10	3.1
2,4-Dinitrophenol	---	10 U	29	10	10 U	10	3.5	10 U	29	10	10 U	31	10	9 U	28	9	10 U	10	3.5
2,4-Dinitrotoluene	---	1 U	5	1	5.0 U	5.0	2.5	1 U	5	1	1 U	5	1	0.9 U	5	0.9	5.0 U	5.0	2.5
2,6-Dinitrotoluene	---	0.5 U	1	0.5	5.0 U	5.0	2.4	0.5 U	1	0.5	0.5 U	1	0.5	0.5 U	0.9	0.5	5.0 U	5.0	2.4
bis(2-Ethylhexyl)phthalate	1.2	2 U	5	2	1.0 U	1.0	1.9	2 U	5	2	2 U	5	2	2 U	5	2	1.0 U	1.0	1.9

TABLE L-1
GROUNDWATER ANALYTICAL RESULTS
BOEING ISAACSON-THOMPSON
REMEDIAL INVESTIGATION

Location:		IT-DUP-1 (IT-I-104)			IT-I-200			IT-I-200			IT-I-200			IT-I-200			IT-I-203		
Laboratory Sample ID:	Preliminary	6788054/678805/6788056/VJ32J			UA86B/UA86F/UA87B/UA87E			6568988/6568989/UK92A			6686960/6686961/6686962/UY34B			6787989/6787990/6787991/VJ03A			UA44D/UA44L/UA45D/UA45K/UB46D/UB46K		
Laboratory Data Package ID:	Cleanup	1335483/VJ32			UA86/UA87			1293530/UK92			1315688/UY34			1335480/VJ03			UA44/UA45/UB46		
Sample Date:	Levels	9/12/2012			12/12/2011			03/06/2012			6/13/2012			9/11/2012			12/07/2011		
		Result	Reporting Limit	Detection Limit	Result	Reporting Limit	Detection Limit	Result	Reporting Limit	Detection Limit	Result	Reporting Limit	Detection Limit	Result	Reporting Limit	Detection Limit	Result	Reporting Limit	Detection Limit
Fluoranthene	11	0.1 U	0.5	0.1	1.0 U	1.0	0.52	0.1 U	0.5	0.1	0.1 U	0.5	0.1	0.09 U	0.5	0.09	1.0 U	1.0	0.52
Fluorene	45	0.1 U	0.5	0.1	1.0 U	1.0	0.56	0.1 U	0.5	0.1	0.1 U	0.5	0.1	0.09 U	0.5	0.09	1.0 U	1.0	0.56
Hexachlorobenzene	---	0.1 U	0.5	0.1	1.0 U	1.0	0.47	0.1 U	0.5	0.1	0.1 U	0.5	0.1	0.09 U	0.5	0.09	1.0 U	1.0	0.47
Hexachlorobutadiene	---	0.5 U	1	0.5	1.0 U	1.0	0.31	0.5 U	1	0.5	0.5 U	1	0.5	0.5 U	0.9	0.5	1.0 U	1.0	0.31
Hexachlorocyclopentadiene	---	5 U	14	5	5.0 U	5.0	1.2	5 U	14	5	5 U	15	5	5 U	14	5	5.0 U	5.0	1.2
Hexachloroethane	---	1 U	5	1	1.0 U	1.0	0.35	1 U	5	1	1 U	5	1	0.9 U	5	0.9	1.0 U	1.0	0.35
Indeno(1,2,3-cd)pyrene	0.0018	0.1 U	0.5	0.1	1.0 U	1.0	0.48	0.1 U	0.5	0.1	0.1 U	0.5	0.1	0.09 U	0.5	0.09	1.0 U	1.0	0.48
Isophorone	---	0.5 U	1	0.5	1.0 U	1.0	0.48	0.5 U	1	0.5	0.5 U	1	0.5	0.5 U	0.9	0.5	1.0 U	1.0	0.48
1-Methylnaphthalene	2.3	0.1 U	0.5	0.1	1.0 U	1.0	0.48	0.1 U	0.5	0.1	0.1 U	0.5	0.1	0.09 U	0.5	0.09	1.0 U	1.0	0.48
2-Methylnaphthalene	64	0.1 U	0.5	0.1	1.0 U	1.0	0.48	0.1 U	0.5	0.1	0.1 U	0.5	0.1	0.09 U	0.5	0.09	1.0 U	1.0	0.48
2-Methylphenol	3100	0.5 U	1	0.5	1.0 U	1.0	0.53	0.5 U	1	0.5	0.5 U	1	0.5	0.5 U	0.9	0.5	1.0 U	1.0	0.53
4-Methylphenol	330	0.5 U	1	0.5	1.0 U	1.0	0.52	0.5 U	1	0.5	0.5 U	1	0.5	0.5 U	0.9	0.5	1.0 U	1.0	0.52
Naphthalene	26	0.1 U	0.5	0.1	1.0 U	1.0	0.52	0.1 U	0.5	0.1	0.1 U	0.5	0.1	**0.1** J1	0.5	0.09	1.0 U	1.0	0.52
2-Nitroaniline	---	0.5 U	1	0.5	5.0 U	5.0	2.6	0.5 U	1	0.5	0.5 U	1	0.5	0.5 U	0.9	0.5	5.0 U	5.0	2.6
3-Nitroaniline	---	0.5 U	1	0.5	5.0 U	5.0	2.3	0.5 U	1	0.5	0.5 U	1	0.5	0.5 U	0.9	0.5	5.0 U	5.0	2.3
4-Nitroaniline	---	0.5 U	1	0.5	5.0 U	5.0	2.2	0.5 U	1	0.5	0.5 U	1	0.5	0.5 U	0.9	0.5	5.0 U	5.0	2.2
Nitrobenzene	---	0.5 U	1	0.5	1.0 U	1.0	0.58	0.5 U	1	0.5	0.5 U	1	0.5	0.5 U	0.9	0.5	1.0 U	1.0	0.58
2-Nitrophenol	---	0.5 U	1	0.5	5.0 U	5.0	2.0	0.5 U	1	0.5	0.5 U	1	0.5	0.5 U	0.9	0.5	5.0 U	5.0	2.0
4-Nitrophenol	---	10 U	29	10	5.0 U	5.0	2.6	10 U	29	10	10 U	31	10	9 U	28	9	5.0 U	5.0	2.6
N-Nitroso-Di-N-Propylamine	---	0.5 U	1	0.5	1.0 U	1.0	0.56	0.5 U	1	0.5	0.5 U	1	0.5	0.5 U	0.9	0.5	1.0 U	1.0	0.56
N-Nitrosodiphenylamine	1.96	0.5 U	1	0.5	1.0 U	1.0	0.46	0.5 U	1	0.5	0.5 U	1	0.5	0.5 U	0.9	0.5	1.0 U	1.0	0.46
Di-n-Octyl phthalate	---	2 U	5	2	1.0 U	1.0	0.51	2 U	5	2	2 U	5	2	2 U	5	2	1.0 U	1.0	0.51
Pentachlorophenol	---	1 UJ	5	1	5.0 U	5.0	2.4	1 U	5	1	1 U	5	1	0.9 U	5	0.9	5.0 U	5.0	2.4
Phenanthrene	---	0.1 U	0.5	0.1	1.0 U	1.0	0.56	0.1 U	0.5	0.1	0.1 U	0.5	0.1	0.09 U	0.5	0.09	1.0 U	1.0	0.56
Phenol	41,000	0.5 U	1	0.5	1.0 U	1.0	0.52	0.5 U	1	0.5	0.5 U	1	0.5	0.5 U	0.9	0.5	1.0 U	1.0	0.52
Pyrene	9.8	0.1 U	0.5	0.1	1.0 U	1.0	0.55	0.1 U	0.5	0.1	0.1 U	0.5	0.1	0.09 U	0.5	0.09	1.0 U	1.0	0.55
1,2,4-Trichlorobenzene	1.13	0.5 U	1	0.5	1.0 U	1.0	0.38	0.5 U	1	0.5	0.5 U	1	0.5	0.5 U	0.9	0.5	1.0 U	1.0	0.38
2,4,5-Trichlorophenol	---	0.5 U	1	0.5	5.0 U	5.0	2.2	0.5 U	1	0.5	0.5 U	1	0.5	0.5 U	0.9	0.5	5.0 U	5.0	2.2
2,4,6-Trichlorophenol	---	0.5 U	1	0.5	5.0 U	5.0	2.4	0.5 U	1	0.5	0.5 U	1	0.5	0.5 U	0.9	0.5	5.0 U	5.0	2.4
cPAHs (µg/L)																			
Method SW8270D-SIM																			
Benzo(a)anthracene	0.0018	**0.0050** J1	0.0096	0.0048	0.010 U	0.010	0.0063	0.0049 U	0.0098	0.0049	0.010 U	0.020	0.010	0.0047 U	0.0094	0.0047	0.010 U	0.010	0.0063
Benzo(a)pyrene	0.00018	0.0048 U	0.0096	0.0048	0.010 U	0.010	0.0048	0.0049 U	0.0098	0.0049	0.010 U	0.020	0.010	0.0047 U	0.0094	0.0047	0.010 U	0.010	0.0048
Benzo(b)fluoranthene	0.0018	0.0048 U	0.0096	0.0048	NA	NA	NA	0.0049 U	0.0098	0.0049	0.010 U	0.020	0.010	0.0047 U	0.0094	0.0047	NA	NA	NA
Benzo(k)fluoranthene	0.0018	0.0048 U	0.0096	0.0048	NA	NA	NA	0.0049 U	0.0098	0.0049	0.010 U	0.020	0.010	0.0047 U	0.0094	0.0047	NA	NA	NA
Total Benzofluoranthenes	0.0018	NA	NA	NA	0.020 U	0.020	0.0099	NA	NA	NA	NA	NA	NA	NA	NA	NA	0.020 UJ	0.020	0.0099
Chrysene	0.018	0.0048 U	0.0096	0.0048	0.010 U	0.010	0.0046	0.0049 U	0.0098	0.0049	0.0100 U	0.020	0.0100	0.0047 U	0.0094	0.0047	0.010 U	0.010	0.0046
Dibenz(a,h)anthracene	0.0018	0.0038 U	0.0096	0.0038	0.010 U	0.010	0.0048	0.0039 U	0.0098	0.0039	0.0080 U	0.020	0.0080	0.0038 U	0.0094	0.0038	0.010 U	0.010	0.0048
Indeno(1,2,3-cd)pyrene	0.0018	0.0038 U	0.0096	0.0038	0.010 U	0.010	0.0046	0.0039 U	0.0098	0.0039	0.008 U	0.020	0.008	0.0038 U	0.0094	0.0038	0.010 U	0.010	0.0046
Pyrene	9.8	0.0096 U	0.048	0.0096	NA	NA	NA	0.0098 U	0.049	0.0098	0.020 U	0.10	0.020	0.0094 U	0.047	0.0094	NA	NA	NA
cPAH TEQ	0.00018	**0.0005** J	NA	NA	ND	NA	NA	ND	NA	NA	ND	NA	NA	ND	NA	NA	ND	NA	NA
PCBs (µg/L)																			
Method SW8082																			
Aroclor 1016	0.000023	0.0057 U	0.0095	0.0057	0.010 U	0.010	0.0025	0.0057 U	0.0095	0.0057	0.0061 U	0.010	0.0061	0.0057 U	0.0096	0.0057	0.010 U	0.010	0.0025
Aroclor 1221	---	0.0057 U	0.0095	0.0057	0.010 U	0.010	0.0028	0.0057 U	0.0095	0.0057	0.0061 U	0.010	0.0061	0.0057 U	0.0096	0.0057	0.010 U	0.010	0.0028
Aroclor 1232	---	0.0067 U	0.0095	0.0067	0.010 U	0.010	0.0028	0.0067 U	0.0095	0.0067	0.0072 U	0.010	0.0072	0.0067 U	0.0096	0.0067	0.010 U	0.010	0.0028
Aroclor 1242	0.000023	0.0057 U	0.0095	0.0057	0.010 U	0.010	0.0028	0.0057 U	0.0095	0.0057	0.0061 U	0.010	0.0061	0.0057 U	0.0096	0.0057	0.010 U	0.010	0.0028
Aroclor 1248	0.000023	0.0048 U	0.0095	0.0048	0.010 U	0.010	0.0028	0.0048 U	0.0095	0.0048	0.0051 U	0.010	0.0051	0.0048 U	0.0096	0.0048	0.010 U	0.010	0.0028
Aroclor 1254	0.0000055	0.0048 U	0.0095	0.0048	0.010 U	0.010	0.0028	0.0048 U	0.0095	0.0048	0.0051 U	0.010	0.0051	0.0048 U	0.0096	0.0048	**0.010**	0.010	0.0028
Aroclor 1260	0.000023	0.0048 U	0.0095	0.0048	0.010 U	0.010	0.0028	0.0048 U	0.0095	0.0048	0.0051 U	0.010	0.0051	0.0048 U	0.0096	0.0048	0.010 U	0.010	0.0028
Total PCBs	0.000023	ND	NA	NA	ND	NA	NA	ND	NA	NA	ND	NA	NA	ND	NA	NA	**0.010**	NA	NA

TABLE L-1
GROUNDWATER ANALYTICAL RESULTS
BOEING ISAACSON-THOMPSON
REMEDIAL INVESTIGATION

Location:		IT-DUP-1 (IT-I-104)			IT-I-200			IT-I-200			IT-I-200			IT-I-200			IT-I-203		
Laboratory Sample ID:	Preliminary	6788054/678805/6788056/VJ32J			UA86B/UA86F/UA87B/UA87E			6568988/6568989/UK92A			6686960/6686961/6686962/UY34B			6787989/6787990/6787991/VJ03A			UA44D/UA44L/UA45D/UA45K/UB46D/UB46K		
Laboratory Data Package ID:	Cleanup	1335483/VJ32			UA86/UA87			1293530/UK92			1315688/UY34			1335480/VJ03			UA44/UA45/UB46		
Sample Date:	Levels	9/12/2012			12/12/2011			03/06/2012			6/13/2012			9/11/2012			12/07/2011		
		Result	Reporting Limit	Detection Limit	Result	Reporting Limit	Detection Limit	Result	Reporting Limit	Detection Limit	Result	Reporting Limit	Detection Limit	Result	Reporting Limit	Detection Limit	Result	Reporting Limit	Detection Limit
TOTAL PETROLEUM HYDROCARBONS (mg/L)																			
NWTPH-Dx																			
Diesel-Range Organics	0.5	0.029 U	0.096	0.029	0.10 U	0.10	0.022	0.067 U	0.24	0.067	**0.041** J1	0.110	0.032	0.029 U	0.098	0.029	0.10 U	0.10	0.022
Oil-Range Organics	0.5	0.067 U	0.240	0.067	0.20 U	0.20	0.044	0.95 U	2.9	0.95	0.074 U	0.260	0.074	0.068 U	0.240	0.068	0.20 U	0.20	0.044
NWTPH-G																			
Gasoline-Range Organics	1.0/0.8	0.05 U	0.25	0.05	0.25 U	0.25	0.06	0.05 U	0.25	0.05	0.05 U	0.25	0.05	0.05 U	0.25	0.05	0.25 U	0.25	0.06
TOTAL METALS (µg/L)																			
Method 200.8																			
Antimony	---	0.33 U	1.0	0.33	0.2 U	0.2	0.010	0.42 U	1.0	0.42	0.42 U	1.0	0.42	0.33 U	1.0	0.33	0.2 U	0.2	0.010
Arsenic	---	**1210**	10.0	2.0	**1.1**	0.2	0.048	0.95 U	2.0	0.95	**1.8** J1	2.0	0.95	**6.2**	2.0	0.40	**3**	1	0.12
Barium	---	**5.8**	2.0	0.41	**2.4**	0.5	0.020	**1.4** J1	2.0	0.69	**11.3**	2.0	0.69	**14.2** J	2.0	0.41	**76.5**	0.5	0.020
Beryllium	---	**0.073** J1	0.50	0.025	0.2 U	0.2	0.021	0.13 U	0.50	0.13	0.13 U	0.50	0.13	0.025 U	0.50	0.025	0.2 U	0.2	0.021
Cadmium	---	0.082 U	0.50	0.082	0.1 U	0.1	0.010	0.20 U	0.50	0.20	0.20 U	0.50	0.20	0.082 U	0.50	0.082	0.1 U	0.1	0.010
Chromium	---	**2.7**	2.0	0.50	0.5 U	0.5	0.045	0.60 U	2.0	0.60	0.60 U	2.0	0.60	0.50 U	2.0	0.50	1 U	1	0.11
Copper	---	**6.1** J	2.0	0.40	0.5 U	0.5	0.158	0.38 U	2.0	0.38	0.38 U	2.0	0.38	**0.52** J1	2.0	0.40	1 U	1	0.40
Lead	---	**0.64** J1	1.0	0.034	0.1 U	0.1	0.046	0.080 U	1.0	0.080	0.080 U	1.0	0.080	0.034 U	1.0	0.034	0.1 U	0.1	0.046
Nickel	---	**0.38** J1	2.0	0.35	**2.5**	0.5	0.079	**0.93** J1	2.0	0.50	**3.2**	2.0	0.50	**2.7**	2.0	0.35	**4.2**	0.5	0.079
Selenium	---	0.50 U	2.0	0.50	0.5 U	0.5	0.127	0.27 U	2.0	0.27	0.27 U	2.0	0.27	0.50 U	2.0	0.50	**5**	5	0.32
Silver	---	0.10 U	0.50	0.10	0.2 U	0.2	0.008	0.098 U	0.50	0.098	0.098 U	0.50	0.098	0.10 U	0.50	0.10	0.2 U	0.2	0.008
Thallium	---	0.15 U	0.50	0.15	0.2 U	0.2	0.004	0.15 U	0.50	0.15	0.15 U	0.50	0.15	0.15 U	0.50	0.15	0.2 U	0.2	0.004
Zinc	---	**7.4** J1	15.0	1.1	4 U	4	0.50	4.0 U	15.0	4.0	4.0 U	15.0	4.0	2.4 UJ2	15.0	1.1	4 U	4	0.50
Method SW7196A (mg/L)																			
Chromium VI	0.00058	0.010 U	0.010	0.00300	0.010 U	0.010	0.00300	0.010 U	0.010	0.00300	0.010 U	0.010	0.00300	0.010 UJ	0.010	0.00300	0.010 U	0.010	0.00300
Method SW7470A/EPA 1631E (ng/L)																			
Mercury	12	**8.58**	5.00	1.60	20.0 U	20.0	2.60	**1.67** J1	5.00	1.60	**0.531**	0.500	0.160	1.60 U	5.00	1.60	20.0 U	20.0	2.60
DISSOLVED METALS (µg/L)																			
Methods 200.8/SW7196A																			
Antimony	150	0.33 U	1.0	0.33	0.2 U	0.2	0.010	0.42 U	1.0	0.42	0.42 U	1.0	0.42	0.33 U	1.0	0.33	0.2 U	0.2	0.010
Arsenic	8	**1180**	10.0	2.0	**0.7**	0.2	0.048	0.95 U	2.0	0.95	0.95 U	2.0	0.95	**5.6**	2.0	0.40	**3.7**	0.5	0.120
Barium	770	**3.6**	2.0	0.41	**2.0**	0.5	0.020	**1.5** J1	2.0	0.69	**9.3**	2.0	0.69	**13.0**	2.0	0.41	**81.6**	0.5	0.020
Beryllium	12	**0.043** J1	0.50	0.025	0.2 U	0.2	0.021	0.13 U	0.50	0.13	0.13 U	0.50	0.13	0.025 U	0.50	0.025	0.2 U	0.2	0.021
Cadmium	0.25	0.082 U	0.50	0.082	0.1 U	0.1	0.010	0.2 U	0.50	0.20	0.20 U	0.50	0.20	0.082 U	0.50	0.082	0.1 U	0.1	0.010
Chromium	74	**2.0** J1	2.0	0.50	**0.9**	0.5	0.045	0.60 U	2.0	0.60	0.60 U	2.0	0.60	0.50 U	2.0	0.50	**0.7**	0.5	0.045
Copper	8	**0.59** J1	2.0	0.40	**1.7**	0.5	0.158	0.38 U	2.0	0.38	0.38 U	2.0	0.38	0.40 U	2.0	0.40	**1.2**	0.5	0.158
Lead	2.5	0.034 U	1.0	0.034	0.1 U	0.1	0.046	0.080 U	1.0	0.080	**0.088** J1	1.0	0.080	0.034 U	1.0	0.034	0.1 U	0.1	0.046
Nickel	8.2	**0.50** J1	2.0	0.35	**2.4**	0.5	0.079	**0.92** J1	2.0	0.50	**3.0**	2.0	0.50	**3.3**	2.0	0.35	**4.8**	0.5	0.079
Selenium	5	0.50 U	2.0	0.50	0.5 U	0.5	0.127	0.27 U	2.0	0.27	0.27 U	2.0	0.27	0.50 U	2.0	0.50	5 U	5	0.32
Silver	22	0.10 U	0.50	0.10	0.2 U	0.2	0.008	0.098 U	0.50	0.098	0.098 U	0.50	0.098	0.10 U	0.50	0.10	0.2 U	0.2	0.008
Thallium	0.47	0.15 U	0.50	0.15	0.2 U	0.2	0.004	0.15 U	0.50	0.15	0.15 U	0.50	0.15	0.15 U	0.50	0.15	0.2 U	0.2	0.004
Zinc	56	**2.4** J1	15.0	1.1	4 U	4	0.50	4.0 U	15.0	4.0	**4.1** J1	15.0	4.0	3.9 UJ2	15.0	1.1	4 U	4	0.50
Method SW7470A/EPA 1631E (ng/L)																			
Mercury	12	1.60 U	5.00	1.60	20.0 U	20.0	2.60	**0.946**	5.00	1.60	**0.722**	0.500	0.160	**2.42** J1	5.00	1.60	20.0 U	20.0	2.60
CONVENTIONALS (mg/L)																			
Chloride (Method 300.0)	---	**48.1** J	8.0	4.0	NA	NA	NA	NA	NA	NA	**1.8**	0.40	0.20	**13.8**	2.0	1.0	NA	NA	NA
Nitrate (Method 300.0)	---	0.050 U	0.10	0.050	0.1 U	0.1	0.007	0.050 U	0.10	0.050	**0.085** J, J1	0.10	0.050	0.050 U	0.10	0.050	1.0 U	1.0	0.070
Sulfate (Method 300.0)	---	**5.2** J	1.0	0.30	**3.9**	0.1	0.059	**4.2**	1.0	0.30	**31.4**	5.0	1.5	**31.6**	5.0	1.5	**420**	20.0	11.8
Total Dissolved Solids (Method 160.1)	---	**359**	30.0	9.7	**72.0**	5.0	5.00	**45.5**	30.0	9.7	**248**	30.0	9.7	**328**	30.0	9.7	**4130**	100	100
FIELD PARAMETERS																			
Temperature (°C)	---	13.54	NA	NA	15.21	NA	NA	12.32	NA	NA	14.8	NA	NA	14.87	NA	NA	14.56	NA	NA
Conductivity (uS/cm)	---	535	NA	NA	183	NA	NA	61	NA	NA	314	NA	NA	0.625	NA	NA	6477	NA	NA
Dissolved Oxygen (mg/L)	---	1.28	NA	NA	0.93	NA	NA	0.86	NA	NA	0.66	NA	NA	8.34	NA	NA	1.28	NA	NA
pH (SU)	---	6.67	NA	NA	5.65	NA	NA	6.61	NA	NA	6.25	NA	NA	6.38	NA	NA	10.13	NA	NA
ORP (mV)	---	-128	NA	NA	29.7	NA	NA	321.3	NA	NA	-25.1	NA	NA	-98	NA	NA	-144.5	NA	NA
Turbidity (NTU)	---	47.2	NA	NA	66.69	NA	NA	10.64	NA	NA	97.36	NA	NA	29.0	NA	NA	0.95	NA	NA
Ferrous Iron (mg/L)	---	3.6	NA	NA	NA	NA	NA	0.0	NA	NA	1.8	NA	NA	4.8	NA	NA	NA	NA	NA

TABLE L-1
GROUNDWATER ANALYTICAL RESULTS
BOEING ISAACSON-THOMPSON
REMEDIAL INVESTIGATION

Location:		IT-I-203			IT-I-203			IT-I-203			IT-I-205			IT-I-205			IT-I-205		
Laboratory Sample ID:	Preliminary	6582523/6582524/UM84C			6690483/6690484/6690485/UZ00E			6789053/6789054/6789055/VJ53C			UA27F/UA27N/UA28F/UA28M/UB45F/UB45M			6582521/6582522/UM84B			6690480/6690481/6690482/UZ00D		
Laboratory Data Package ID:	Cleanup	1296009/UM84			1316296/UZ00			1335688/VJ53			UA27/UA28/UB45			1296009/UM84			1316296/UZ00		
Sample Date:	Levels	3/15/2012			6/15/2012			9/13/2012			12/06/2011			3/15/2012			6/15/2012		
		Result	Reporting Limit	Detection Limit	Result	Reporting Limit	Detection Limit	Result	Reporting Limit	Detection Limit	Result	Reporting Limit	Detection Limit	Result	Reporting Limit	Detection Limit	Result	Reporting Limit	Detection Limit
VOLATILES (µg/L)																			
Method SW8260C																			
Acetone	110,000	3.0 U	5.0	3.0	3.0 U	5.0	3.0	3.0 U	5.0	3.0	2.6 UJ2	5.0	0.72	3.0 U	5.0	3.0	3.0 U	5.0	3.0
Acrolein	---	5.0 U	25	5.0	5.0 U	25	5.0	5.0 U	25	5.0	5.0 UJ	5.0	0.29	5.0 U	25	5.0	5.0 U	25	5.0
Acrylonitrile	0.057	1.0 U	5.0	1.0	1.0 U	5.0	1.0	1.0 U	5.0	1.0	1.0 U	1.0	0.18	1.0 U	5.0	1.0	1.0 U	5.0	1.0
Benzene	2	0.1 U	0.2	0.1	0.1 U	0.2	0.1	0.1 U	0.2	0.1	0.2 U	0.2	0.06	0.1 U	0.2	0.1	0.1 U	0.2	0.1
Bromobenzene	---	0.1 U	0.5	0.1	0.1 U	0.5	0.1	0.1 U	0.5	0.1	0.2 U	0.2	0.05	0.1 U	0.5	0.1	0.1 U	0.5	0.1
Bromochloromethane	---	0.1 U	0.5	0.1	0.1 U	0.5	0.1	0.1 U	0.5	0.1	0.2 U	0.2	0.07	0.1 U	0.5	0.1	0.1 U	0.5	0.1
Bromodichloromethane	17	0.1 U	0.5	0.1	0.1 U	0.5	0.1	0.1 U	0.5	0.1	0.2 U	0.2	0.05	0.1 U	0.5	0.1	0.1 U	0.5	0.1
Bromoform	---	0.1 U	0.5	0.1	0.1 U	0.5	0.1	0.1 U	0.5	0.1	0.2 U	0.2	0.07	0.1 U	0.5	0.1	0.1 U	0.5	0.1
Bromomethane	---	0.1 U	0.5	0.1	0.1 U	0.5	0.1	0.1 U	0.5	0.1	1.0 U	1.0	0.04	0.1 U	0.5	0.1	0.1 U	0.5	0.1
2-Butanone	73,000	1.0 U	5.0	1.0	1.0 U	5.0	1.0	1.0 U	5.0	1.0	5.0 U	5.0	0.81	1.0 U	5.0	1.0	1.0 U	5.0	1.0
n-Butylbenzene	780	0.1 U	0.5	0.1	0.1 U	0.5	0.1	0.1 U	0.5	0.1	0.2 U	0.2	0.11	0.1 U	0.5	0.1	0.1 U	0.5	0.1
sec-Butylbenzene	---	0.1 U	0.5	0.1	0.1 U	0.5	0.1	0.1 U	0.5	0.1	0.2 U	0.2	0.08	0.1 U	0.5	0.1	0.1 U	0.5	0.1
tert-Butylbenzene	---	0.1 U	0.5	0.1	0.1 U	0.5	0.1	0.1 U	0.5	0.1	0.2 U	0.2	0.06	0.1 U	0.5	0.1	0.1 U	0.5	0.1
Carbon Disulfide	3900	**0.4** J1	0.5	0.4	0.4 U	0.5	0.4	0.4 U	0.5	0.4	0.2 U	0.2	0.09	0.4 U	0.5	0.4	0.4 U	0.5	0.4
Carbon Tetrachloride	0.46	0.1 U	0.2	0.1	0.1 U	0.2	0.1	0.1 U	0.2	0.1	0.2 U	0.2	0.08	0.1 U	0.2	0.1	0.1 U	0.2	0.1
Chlorobenzene	270	0.1 U	0.5	0.1	0.1 U	0.5	0.1	0.1 U	0.5	0.1	0.2 U	0.2	0.04	0.1 U	0.5	0.1	0.1 U	0.5	0.1
Chloroethane	21,000	0.1 U	0.5	0.1	0.1 U	0.5	0.1	0.1 U	0.5	0.1	0.2 U	0.2	0.15	0.1 U	0.5	0.1	0.1 U	0.5	0.1
Chloroform	9.4	0.1 U	0.2	0.1	0.1 U	0.2	0.1	0.1 U	0.2	0.1	0.2 U	0.2	0.08	0.1 U	0.2	0.1	0.1 U	0.2	0.1
Chloromethane	10.3	0.2 U	0.5	0.2	0.2 U	0.5	0.2	0.2 U	0.5	0.2	0.5 U	0.5	0.10	0.2 U	0.5	0.2	0.2 U	0.5	0.2
2-Chlorotoluene	---	0.1 U	0.5	0.1	0.1 U	0.5	0.1	0.1 U	0.5	0.1	0.2 U	0.2	0.04	0.1 U	0.5	0.1	0.1 U	0.5	0.1
4-Chlorotoluene	2600	0.1 U	0.5	0.1	0.1 U	0.5	0.1	0.1 U	0.5	0.1	0.2 U	0.2	0.07	0.1 U	0.5	0.1	0.1 U	0.5	0.1
1,2-Dibromo-3-chloropropane	---	0.2 U	0.5	0.2	0.2 U	0.5	0.2	0.2 U	0.5	0.2	0.5 UJ	0.5	0.21	0.2 U	0.5	0.2	0.2 U	0.5	0.2
Dibromochloromethane	---	0.1 U	0.5	0.1	0.1 U	0.5	0.1	0.1 U	0.5	0.1	0.2 U	0.2	0.09	0.1 U	0.5	0.1	0.1 U	0.5	0.1
Dibromomethane	---	0.1 U	0.5	0.1	0.1 U	0.5	0.1	0.1 U	0.5	0.1	0.2 U	0.2	0.08	0.1 U	0.5	0.1	0.1 U	0.5	0.1
trans-1,4-Dichloro-2-butene	---	1.0 U	5.0	1.0	1.0 U	5.0	1.0	1.0 U	5.0	1.0	1.0 UJ	1.0	0.24	1.0 U	5.0	1.0	1.0 U	5.0	1.0
1,2-Dichlorobenzene	440	0.1 U	0.5	0.1	0.1 U	0.5	0.1	0.1 U	0.5	0.1	0.2 U	0.2	0.06	0.1 U	0.5	0.1	0.1 U	0.5	0.1
1,3-Dichlorobenzene	960	0.1 U	0.5	0.1	0.1 U	0.5	0.1	0.1 U	0.5	0.1	0.2 U	0.2	0.04	0.1 U	0.5	0.1	0.1 U	0.5	0.1
1,4-Dichlorobenzene	1.7	0.1 U	0.5	0.1	0.1 U	0.5	0.1	0.1 U	0.5	0.1	0.2 U	0.2	0.06	0.1 U	0.5	0.1	0.1 U	0.5	0.1
1,1-Dichloroethane	33	0.1 U	0.5	0.1	0.1 U	0.5	0.1	0.1 U	0.5	0.1	0.2 U	0.2	0.05	0.1 U	0.5	0.1	0.1 U	0.5	0.1
1,2-Dichloroethane	3.6	0.1 U	0.2	0.1	0.1 U	0.2	0.1	0.1 U	0.2	0.1	0.2 U	0.2	0.08	0.1 U	0.2	0.1	0.1 U	0.2	0.1
1,1-Dichloroethene	3.2	0.1 U	0.2	0.1	0.1 U	0.2	0.1	0.1 U	0.2	0.1	0.2 U	0.2	0.09	0.1 U	0.2	0.1	0.1 U	0.2	0.1
cis-1,2-Dichloroethene	130	0.1 U	0.2	0.1	0.1 U	0.2	0.1	0.1 U	0.2	0.1	**0.1** J1	0.2	0.10	0.1 U	0.2	0.1	0.1 U	0.2	0.1
trans-1,2-Dichloroethene	940	0.1 U	0.2	0.1	0.1 U	0.2	0.1	0.1 U	0.2	0.1	0.2 U	0.2	0.08	0.1 U	0.2	0.1	0.1 U	0.2	0.1
1,2-Dichloropropane	3.7	0.1 U	0.5	0.1	0.1 U	0.5	0.1	0.1 U	0.5	0.1	0.2 U	0.2	0.09	0.1 U	0.5	0.1	0.1 U	0.5	0.1
1,3-Dichloropropane	---	0.1 U	0.5	0.1	0.1 U	0.5	0.1	0.1 U	0.5	0.1	0.2 U	0.2	0.02	0.1 U	0.5	0.1	0.1 U	0.5	0.1
2,2-Dichloropropane	---	0.1 U	0.5	0.1	0.1 U	0.5	0.1	0.1 U	0.5	0.1	0.2 U	0.2	0.08	0.1 U	0.5	0.1	0.1 U	0.5	0.1
1,1-Dichloropropene	---	0.1 U	0.5	0.1	0.1 U	0.5	0.1	0.1 U	0.5	0.1	0.2 U	0.2	0.09	0.1 U	0.5	0.1	0.1 U	0.5	0.1
cis-1,3-Dichloropropene	---	0.1 U	0.2	0.1	0.1 U	0.2	0.1	0.1 U	0.2	0.1	0.2 U	0.2	0.06	0.1 U	0.2	0.1	0.1 U	0.2	0.1
trans-1,3-Dichloropropene	---	0.1 U	0.2	0.1	0.1 U	0.2	0.1	0.1 U	0.2	0.1	0.2 U	0.2	0.06	0.1 U	0.2	0.1	0.1 U	0.2	0.1
Ethylbenzene	1.7	0.1 U	0.5	0.1	0.1 U	0.5	0.1	0.1 U	0.5	0.1	0.2 U	0.2	0.09	0.1 U	0.5	0.1	0.1 U	0.5	0.1
Ethylene Dibromide	---	0.1 U	0.5	0.1	0.1 U	0.5	0.1	0.1 U	0.5	0.1	0.2 U	0.2	0.08	0.1 U	0.5	0.1	0.1 U	0.5	0.1
Hexachlorobutadiene	---	0.1 U	0.5	0.1	0.1 U	0.5	0.1	0.1 U	0.5	0.1	0.5 U	0.5	0.11	0.1 U	0.5	0.1	0.1 U	0.5	0.1
2-Hexanone	3200	1.0 U	5.0	1.0	1.0 U	5.0	1.0	1.0 U	5.0	1.0	5.0 U	5.0	0.31	1.0 U	5.0	1.0	1.0 U	5.0	1.0
Isopropylbenzene	270	0.1 U	0.5	0.1	0.1 U	0.5	0.1	0.1 U	0.5	0.1	0.2 U	0.2	0.06	0.1 U	0.5	0.1	0.1 U	0.5	0.1
4-Isopropyltoluene	---	0.1 U	0.5	0.1	0.1 U	0.5	0.1	0.1 U	0.5	0.1	0.2 U	0.2	0.08	0.1 U	0.5	0.1	0.1 U	0.5	0.1
Methyl Iodide	---	0.1 U	0.5	0.1	0.1 UJ	0.5	0.1	0.1 U	0.5	0.1	1.0 U	1.0	0.04	0.1 U	0.5	0.1	0.1 UJ	0.5	0.1
4-Methyl-2-Pentanone (MIBK)	19,000	1.0 U	5.0	1.0	1.0 U	5.0	1.0	1.0 U	5.0	1.0	5.0 U	5.0	0.38	1.0 U	5.0	1.0	1.0 U	5.0	1.0
Methylene Chloride	230	0.2 U	0.5	0.2	0.2 U	0.5	0.2	0.2 U	0.5	0.2	0.5 U	0.5	0.39	0.2 U	0.5	0.2	0.2 U	0.5	0.2
Naphthalene	26	0.1 U	0.5	0.1	0.1 U	0.5	0.1	0.1 U	0.5	0.1	0.5 U	0.5	0.07	0.1 U	0.5	0.1	0.1 U	0.5	0.1
n-Propylbenzene	530	0.1 U	0.5	0.1	0.1 U	0.5	0.1	0.1 U	0.5	0.1	0.2 U	0.2	0.08	0.1 U	0.5	0.1	0.1 U	0.5	0.1
Styrene	77,000	0.1 U	0.5	0.1	0.1 U	0.5	0.1	0.1 U	0.5	0.1	0.2 U	0.2	0.07	0.1 U	0.5	0.1	0.1 U	0.5	0.1
1,1,1,2-Tetrachloroethane	---	0.1 U	0.5	0.1	0.1 U	0.5	0.1	0.1 U	0.5	0.1	0.2 U	0.2	0.07	0.1 U	0.5	0.1	0.1 U	0.5	0.1
1,1,2,2-Tetrachloroethane	0.33	0.1 U	0.2	0.1	0.1 U	0.2	0.1	0.1 U	0.2	0.1	0.2 U	0.2	0.07	0.1 U	0.2	0.1	0.1 U	0.2	0.1
Tetrachloroethene	3.3	0.1 U	0.2	0.1	0.1 U	0.2	0.1	0.1 U	0.2	0.1	0.2 U	0.2	0.09	0.1 U	0.2	0.1	0.1 U	0.2	0.1
Toluene	1300	0.1 U	0.2	0.1	0.1 U	0.2	0.1	0.1 U	0.2	0.1	0.2 U	0.2	0.06	0.1 U	0.2	0.1	0.1 U	0.2	0.1
1,1,2-Trichloro-1,2,2-trifuoroethane	59,000	0.2 U	0.5	0.2	0.2 U	0.5	0.2	0.2 U	0.5	0.2	0.2 U	0.2	0.11	0.2 U	0.5	0.2	0.2 U	0.5	0.2
1,2,3-Trichlorobenzene	---	0.1 U	0.5	0.1	0.1 U	0.5	0.1	0.1 U	0.5	0.1	0.5 U	0.5	0.09	0.1 U	0.5	0.1	0.1 U	0.5	0.1

TABLE L-1
GROUNDWATER ANALYTICAL RESULTS
BOEING ISAACSON-THOMPSON
REMEDIAL INVESTIGATION

Location:		IT-I-203			IT-I-203			IT-I-203			IT-I-205			IT-I-205			IT-I-205		
Laboratory Sample ID:	Preliminary	6582523/6582524/UM84C			6690483/6690484/6690485/UZ00E			6789053/6789054/6789055/VJ53C			UA27F/UA27N/UA28F/UA28M/UB45F/UB45M			6582521/6582522/UM84B			6690480/6690481/6690482/UZ00D		
Laboratory Data Package ID:	Cleanup	1296009/UM84			1316296/UZ00			1335688/VJ53			UA27/UA28/UB45			1296009/UM84			1316296/UZ00		
Sample Date:	Levels	3/15/2012			6/15/2012			9/13/2012			12/06/2011			3/15/2012			6/15/2012		
		Result	Reporting Limit	Detection Limit	Result	Reporting Limit	Detection Limit	Result	Reporting Limit	Detection Limit	Result	Reporting Limit	Detection Limit	Result	Reporting Limit	Detection Limit	Result	Reporting Limit	Detection Limit
1,2,4-Trichlorobenzene	1.13	0.1 U	0.5	0.1	0.1 U	0.5	0.1	0.1 U	0.5	0.1	0.5 U	0.5	0.10	0.1 U	0.5	0.1	0.1 U	0.5	0.1
1,1,1-Trichloroethane	46,000	0.1 U	0.5	0.1	0.1 U	0.5	0.1	0.1 U	0.5	0.1	0.2 U	0.2	0.09	0.1 U	0.5	0.1	0.1 U	0.5	0.1
1,1,2-Trichloroethane	2.3	0.1 U	0.2	0.1	0.1 U	0.2	0.1	0.1 U	0.2	0.1	0.2 U	0.2	0.04	0.1 U	0.2	0.1	0.1 U	0.2	0.1
Trichloroethene	1.4	0.1 U	0.2	0.1	0.1 U	0.2	0.1	0.1 U	0.2	0.1	0.2 U	0.2	0.08	0.1 U	0.2	0.1	0.1 U	0.2	0.1
Trichlorofluoromethane	6900	0.1 U	0.5	0.1	0.1 U	0.5	0.1	0.1 U	0.5	0.1	0.2 U	0.2	0.09	0.1 U	0.5	0.1	0.1 U	0.5	0.1
1,2,3-Trichloropropane	---	0.3 U	1.0	0.3	0.3 U	1.0	0.3	0.3 U	1.0	0.3	0.5 U	0.5	0.23	0.3 U	1.0	0.3	0.3 U	1.0	0.3
1,2,4-Trimethylbenzene	303	0.1 U	0.5	0.1	0.1 U	0.5	0.1	0.1 U	0.5	0.1	0.2 U	0.2	0.06	0.1 U	0.5	0.1	0.1 U	0.5	0.1
1,3,5-Trimethylbenzene	303	0.1 U	0.5	0.1	0.1 U	0.5	0.1	0.1 U	0.5	0.1	0.2 U	0.2	0.06	0.1 U	0.5	0.1	0.1 U	0.5	0.1
Vinyl Acetate	---	0.2 U	0.5	0.2	0.2 U	0.5	0.2	0.2 U	0.5	0.2	1.0 U	1.0	0.07	0.2 U	0.5	0.2	0.2 U	0.5	0.2
Vinyl Chloride	0.53	0.1 U	0.2	0.1	0.1 U	0.2	0.1	0.1 U	0.2	0.1	0.2 U	0.2	0.08	0.1 U	0.2	0.1	0.1 U	0.2	0.1
m,p-Xylene	1300	0.1 U	0.5	0.1	0.1 U	0.5	0.1	0.1 U	0.5	0.1	0.4 U	0.4	0.14	0.1 U	0.5	0.1	0.1 U	0.5	0.1
o-Xylene	1600	0.1 U	0.5	0.1	0.1 U	0.5	0.1	0.1 U	0.5	0.1	0.2 U	0.2	0.06	0.1 U	0.5	0.1	0.1 U	0.5	0.1
2-Chloroethylvinylether	---	NA	NA	NA	NA	NA	NA	NA	NA	NA	1.0 U	1.0	0.09	NA	NA	NA	NA	NA	NA
Bromoethane	---	NA	NA	NA	NA	NA	NA	NA	NA	NA	0.2 U	0.2	0.09	NA	NA	NA	NA	NA	NA
VOLATILES (µg/L)																			
Method SW8260C-SIM																			
Tetrachloroethene	3.3	0.010 U	0.020	0.010	0.019 UJ2	0.020	0.010	**0.011** J1	0.020	0.010	0.020 U	0.020	0.0036	0.010 U	0.020	0.010	0.012 UJ2	0.020	0.010
Vinyl Chloride	0.53	0.010 U	0.020	0.010	0.010 U	0.020	0.010	0.010 U	0.020	0.010	0.020 U	0.020	0.0022	0.010 U	0.020	0.010	0.010 U	0.020	0.010
Acrylonitrile	0.057	NA	NA	NA	NA	NA	NA	NA	NA	NA	0.050 U	0.050	0.0158	NA	NA	NA	NA	NA	NA
SEMIVOLATILES (µg/L)																			
Method SW8270D																			
Acenaphthene	120	0.1 U	0.5	0.1	0.1 U	0.5	0.1	0.09 U	0.5	0.09	1.0 U	1.0	0.55	0.1 U	0.5	0.1	0.1 U	0.5	0.1
Acenaphthylene	---	0.1 U	0.5	0.1	0.1 U	0.5	0.1	0.09 U	0.5	0.09	1.0 U	1.0	0.48	0.1 U	0.5	0.1	0.1 U	0.5	0.1
Anthracene	200	0.1 U	0.5	0.1	0.1 U	0.5	0.1	0.09 U	0.5	0.09	1.0 U	1.0	0.53	0.1 U	0.5	0.1	0.1 U	0.5	0.1
Benzo(a)anthracene	0.0018	0.1 U	0.5	0.1	0.1 U	0.5	0.1	0.09 U	0.5	0.09	1.0 U	1.0	0.52	0.1 U	0.5	0.1	0.1 U	0.5	0.1
Benzo(a)pyrene	0.00018	0.1 U	0.5	0.1	0.1 U	0.5	0.1	0.09 U	0.5	0.09	1.0 U	1.0	0.48	0.1 U	0.5	0.1	0.1 U	0.5	0.1
Benzo(b)fluoranthene	0.0018	0.1 U	0.5	0.1	0.1 U	0.5	0.1	0.09 U	0.5	0.09	NA	NA	NA	0.1 U	0.5	0.1	0.1 U	0.5	0.1
Benzo(g,h,i)perylene	---	0.1 U	0.5	0.1	0.1 U	0.5	0.1	0.09 U	0.5	0.09	1.0 U	1.0	0.55	0.1 U	0.5	0.1	0.1 U	0.5	0.1
Benzo(k)fluoranthene	0.0018	0.1 U	0.5	0.1	0.1 U	0.5	0.1	0.09 U	0.5	0.09	NA	NA	NA	0.1 U	0.5	0.1	0.1 U	0.5	0.1
Total Benzofluoranthenes	0.0018	NA	NA	NA	NA	NA	NA	NA	NA	NA	1.0 U	1.0	0.48	NA	NA	NA	NA	NA	NA
Benzoic Acid	2,240	6 U	15	6	6 U	14	6	6 UJ	14	6	10 UJ	10	5.1	6 U	14	6	6 U	15	6
Benzyl Alcohol	182	5 U	15	5	5 U	14	5	5 U	14	5	5.0 U	5.0	2.0	5 U	14	5	5 U	15	5
4-Bromophenyl-phenylether	---	0.5 U	1	0.5	0.5 U	1	0.5	0.5 U	0.9	0.5	1.0 U	1.0	0.42	0.5 U	1	0.5	0.5 U	1	0.5
Butylbenzylphthalate	0.41	2 U	5	2	2 U	5	2	2 U	5	2	1.0 U	1.0	0.56	2 U	5	2	2 U	5	2
Di-n-Butylphthalate	47	2 U	5	2	2 U	5	2	2 U	5	2	1.0 U	1.0	0.54	2 U	5	2	2 U	5	2
Carbazole	---	0.5 U	1	0.5	0.5 U	1	0.5	0.5 U	0.9	0.5	1.0 U	1.0	0.31	0.5 U	1	0.5	0.5 U	1	0.5
4-Chloro-3-methylphenol	3700	0.5 U	1	0.5	0.5 U	1	0.5	0.5 U	0.9	0.5	5.0 U	5.0	2.4	0.5 U	1	0.5	0.5 U	1	0.5
4-Chloroaniline	---	0.5 U	1	0.5	0.5 U	1	0.5	0.5 U	0.9	0.5	5.0 U	5.0	2.6	0.5 U	1	0.5	0.5 U	1	0.5
bis(2-Chloroethoxy) Methane	---	0.5 U	1	0.5	0.5 U	1	0.5	0.5 U	0.9	0.5	1.0 U	1.0	0.56	0.5 U	1	0.5	0.5 U	1	0.5
Bis-(2-Chloroethyl) Ether	---	0.5 U	1	0.5	0.5 U	1	0.5	0.5 U	0.9	0.5	1.0 U	1.0	0.58	0.5 U	1	0.5	0.5 U	1	0.5
2-Chloronaphthalene	---	0.4 U	1	0.4	0.4 U	1	0.4	0.4 U	0.9	0.4	1.0 U	1.0	0.48	0.4 U	1	0.4	0.4 U	1	0.4
2-Chlorophenol	---	0.5 U	1	0.5	0.5 U	1	0.5	0.5 U	0.9	0.5	1.0 U	1.0	0.53	0.5 U	1	0.5	0.5 U	1	0.5
4-Chlorophenyl-phenylether	---	0.5 U	1	0.5	0.5 U	1	0.5	0.5 U	0.9	0.5	1.0 U	1.0	0.45	0.5 U	1	0.5	0.5 U	1	0.5
2,2'-Oxybis(1-Chloropropane)	---	0.5 U	1	0.5	0.5 U	1	0.5	0.5 U	0.9	0.5	1.0 U	1.0	0.62	0.5 U	1	0.5	0.5 U	1	0.5
Chrysene	0.018	0.1 U	0.5	0.1	0.1 U	0.5	0.1	0.09 U	0.5	0.09	1.0 U	1.0	0.55	0.1 U	0.5	0.1	0.1 U	0.5	0.1
Dibenz(a,h)anthracene	0.0018	0.1 U	0.5	0.1	0.1 U	0.5	0.1	0.09 U	0.5	0.09	1.0 U	1.0	0.48	0.1 U	0.5	0.1	0.1 U	0.5	0.1
Dibenzofuran	1.3	0.5 U	1	0.5	0.5 U	1	0.5	0.5 U	0.9	0.5	1.0 U	1.0	0.48	0.5 U	1	0.5	0.5 U	1	0.5
1,2-Dichlorobenzene	440	0.5 U	1	0.5	0.5 U	1	0.5	0.5 U	0.9	0.5	1.0 U	1.0	0.36	0.5 U	1	0.5	0.5 U	1	0.5
1,3-Dichlorobenzene	---	0.5 U	1	0.5	0.5 U	1	0.5	0.5 U	0.9	0.5	1.0 U	1.0	0.36	0.5 U	1	0.5	0.5 U	1	0.5
1,4-Dichlorobenzene	1.7	0.5 U	1	0.5	0.5 U	1	0.5	0.5 U	0.9	0.5	1.0 U	1.0	0.40	0.5 U	1	0.5	0.5 U	1	0.5
3,3'-Dichlorobenzidine	---	2 U	5	2	2 U	5	2	2 U	5	2	5.0 U	5.0	1.5	2 U	5	2	2 U	5	2
2,4-Dichlorophenol	---	0.5 U	1	0.5	0.5 U	1	0.5	0.5 U	0.9	0.5	5.0 U	5.0	2.6	0.5 U	1	0.5	0.5 U	1	0.5
Diethylphthalate	4,236	2 U	5	2	2 U	5	2	2 U	5	2	1.0 U	1.0	0.58	2 U	5	2	2 U	5	2
2,4-Dimethylphenol	660	0.5 U	1	0.5	0.5 U	1	0.5	0.5 U	0.9	0.5	1.0 U	1.0	0.36	0.5 U	1	0.5	0.5 U	1	0.5
Dimethylphthalate	1,100,000	2 U	5	2	2 U	5	2	2 U	5	2	1.0 U	1.0	0.53	2 U	5	2	2 U	5	2
4,6-Dinitro-2-Methylphenol	---	5 U	15	5	5 U	14	5	5 U	14	5	10 U	10	3.1	5 U	14	5	5 U	15	5
2,4-Dinitrophenol	---	10 U	30	10	10 U	29	10	9 U	28	9	10 U	10	3.5	10 U	29	10	10 U	29	10
2,4-Dinitrotoluene	---	1 U	5	1	1 U	5	1	0.9 U	5	0.9	5.0 U	5.0	2.5	1 U	5	1	1 U	5	1
2,6-Dinitrotoluene	---	0.5 U	1	0.5	0.5 U	1	0.5	0.5 U	0.9	0.5	5.0 U	5.0	2.4	0.5 U	1	0.5	0.5 U	1	0.5
bis(2-Ethylhexyl)phthalate	1.2	2 U	5	2	2 U	5	2	2 U	5	2	1.0 U	1.0	1.9	2 U	5	2	2 U	5	2

TABLE L-1
GROUNDWATER ANALYTICAL RESULTS
BOEING ISAACSON-THOMPSON
REMEDIAL INVESTIGATION

Location:		IT-I-203			IT-I-203			IT-I-203			IT-I-205			IT-I-205			IT-I-205		
Laboratory Sample ID:	Preliminary	6582523/6582524/UM84C			6690483/6690484/6690485/UZ00E			6789053/6789054/6789055/VJ53C			UA27F/UA27N/UA28F/UA28M/UB45F/UB45M			6582521/6582522/UM84B			6690480/6690481/6690482/UZ00D		
Laboratory Data Package ID:	Cleanup	1296009/UM84			1316296/UZ00			1335688/VJ53			UA27/UA28/UB45			1296009/UM84			1316296/UZ00		
Sample Date:	Levels	3/15/2012			6/15/2012			9/13/2012			12/06/2011			3/15/2012			6/15/2012		
		Result	Reporting Limit	Detection Limit	Result	Reporting Limit	Detection Limit	Result	Reporting Limit	Detection Limit	Result	Reporting Limit	Detection Limit	Result	Reporting Limit	Detection Limit	Result	Reporting Limit	Detection Limit
Fluoranthene	11	0.1 U	0.5	0.1	0.1 U	0.5	0.1	0.09 U	0.5	0.09	1.0 U	1.0	0.52	0.1 U	0.5	0.1	0.1 U	0.5	0.1
Fluorene	45	0.1 U	0.5	0.1	0.1 U	0.5	0.1	0.09 U	0.5	0.09	1.0 U	1.0	0.56	0.1 U	0.5	0.1	0.1 U	0.5	0.1
Hexachlorobenzene	---	0.1 U	0.5	0.1	0.1 U	0.5	0.1	0.09 U	0.5	0.09	1.0 U	1.0	0.47	0.1 U	0.5	0.1	0.1 U	0.5	0.1
Hexachlorobutadiene	---	0.5 U	1	0.5	0.5 U	1	0.5	0.5 U	0.9	0.5	1.0 U	1.0	0.31	0.5 U	1	0.5	0.5 U	1	0.5
Hexachlorocyclopentadiene	---	5 U	15	5	5 U	14	5	5 U	14	5	5.0 U	5.0	1.2	5 U	14	5	5 U	15	5
Hexachloroethane	---	1 U	5	1	1 U	5	1	0.9 U	5	0.9	1.0 U	1.0	0.35	1 U	5	1	1 U	5	1
Indeno(1,2,3-cd)pyrene	0.0018	0.1 U	0.5	0.1	0.1 U	0.5	0.1	0.09 U	0.5	0.09	1.0 U	1.0	0.48	0.1 U	0.5	0.1	0.1 U	0.5	0.1
Isophorone	---	0.5 U	1	0.5	0.5 U	1	0.5	0.5 U	0.9	0.5	1.0 U	1.0	0.48	0.5 U	1	0.5	0.5 U	1	0.5
1-Methylnaphthalene	2.3	0.1 U	0.5	0.1	0.1 U	0.5	0.1	0.09 U	0.5	0.09	1.0 U	1.0	0.48	0.1 U	0.5	0.1	0.1 U	0.5	0.1
2-Methylnaphthalene	64	0.1 U	0.5	0.1	0.1 U	0.5	0.1	0.09 U	0.5	0.09	1.0 U	1.0	0.48	0.1 U	0.5	0.1	0.1 U	0.5	0.1
2-Methylphenol	3100	0.5 U	1	0.5	0.5 U	1	0.5	0.5 U	0.9	0.5	1.0 U	1.0	0.53	0.5 U	1	0.5	0.5 U	1	0.5
4-Methylphenol	330	0.5 U	1	0.5	0.5 U	1	0.5	0.5 U	0.9	0.5	1.0 U	1.0	0.52	0.5 U	1	0.5	0.5 U	1	0.5
Naphthalene	26	0.1 U	0.5	0.1	0.1 U	0.5	0.1	0.09 U	0.5	0.09	1.0 U	1.0	0.52	0.1 U	0.5	0.1	0.1 U	0.5	0.1
2-Nitroaniline	---	0.5 U	1	0.5	0.5 U	1	0.5	0.5 U	0.9	0.5	5.0 U	5.0	2.6	0.5 U	1	0.5	0.5 U	1	0.5
3-Nitroaniline	---	0.5 U	1	0.5	0.5 U	1	0.5	0.5 U	0.9	0.5	5.0 U	5.0	2.3	0.5 U	1	0.5	0.5 U	1	0.5
4-Nitroaniline	---	0.5 U	1	0.5	0.5 U	1	0.5	0.5 U	0.9	0.5	5.0 U	5.0	2.2	0.5 U	1	0.5	0.5 U	1	0.5
Nitrobenzene	---	0.5 U	1	0.5	0.5 U	1	0.5	0.5 U	0.9	0.5	1.0 U	1.0	0.58	0.5 U	1	0.5	0.5 U	1	0.5
2-Nitrophenol	---	0.5 U	1	0.5	0.5 U	1	0.5	0.5 U	0.9	0.5	5.0 U	5.0	2.0	0.5 U	1	0.5	0.5 U	1	0.5
4-Nitrophenol	---	10 U	30	10	10 U	29	10	9 U	28	9	5.0 U	5.0	2.6	10 U	29	10	10 U	29	10
N-Nitroso-Di-N-Propylamine	---	0.5 U	1	0.5	0.5 U	1	0.5	0.5 U	0.9	0.5	1.0 U	1.0	0.56	0.5 U	1	0.5	0.5 U	1	0.5
N-Nitrosodiphenylamine	1.96	0.5 U	1	0.5	0.5 U	1	0.5	0.5 U	0.9	0.5	1.0 U	1.0	0.46	0.5 U	1	0.5	0.5 U	1	0.5
Di-n-Octyl phthalate	---	2 U	5	2	2 U	5	2	2 U	5	2	1.0 U	1.0	0.51	2 U	5	2	2 U	5	2
Pentachlorophenol	---	1 U	5	1	1 U	5	1	0.9 UJ	5	0.9	5.0 U	5.0	2.4	1 U	5	1	1 U	5	1
Phenanthrene	---	0.1 U	0.5	0.1	0.1 U	0.5	0.1	0.09 U	0.5	0.09	1.0 U	1.0	0.56	0.1 U	0.5	0.1	0.1 U	0.5	0.1
Phenol	41,000	0.5 U	1	0.5	0.5 U	1	0.5	0.5 U	0.9	0.5	1.0 U	1.0	0.52	0.5 U	1	0.5	0.5 U	1	0.5
Pyrene	9.8	0.1 U	0.5	0.1	0.1 U	0.5	0.1	0.09 U	0.5	0.09	1.0 U	1.0	0.55	0.1 U	0.5	0.1	0.1 U	0.5	0.1
1,2,4-Trichlorobenzene	1.13	0.5 U	1	0.5	0.5 U	1	0.5	0.5 U	0.9	0.5	1.0 U	1.0	0.38	0.5 U	1	0.5	0.5 U	1	0.5
2,4,5-Trichlorophenol	---	0.5 U	1	0.5	0.5 U	1	0.5	0.5 U	0.9	0.5	5.0 U	5.0	2.2	0.5 U	1	0.5	0.5 U	1	0.5
2,4,6-Trichlorophenol	---	0.5 U	1	0.5	0.5 U	1	0.5	0.5 U	0.9	0.5	5.0 U	5.0	2.4	0.5 U	1	0.5	0.5 U	1	0.5
cPAHs (µg/L)																			
Method SW8270D-SIM																			
Benzo(a)anthracene	0.0018	**0.0050** J1	0.0099	0.0049	0.0048 U	0.0096	0.0048	**0.0050** J1	0.0095	0.0047	0.010 U	0.010	0.0063	0.0049 U	0.0098	0.0049	0.0049 U	0.0098	0.0049
Benzo(a)pyrene	0.00018	0.0049 U	0.0099	0.0049	0.0048 U	0.0096	0.0048	0.0047 U	0.0095	0.0047	0.010 U	0.010	0.0048	0.0049 U	0.0098	0.0049	0.0049 U	0.0098	0.0049
Benzo(b)fluoranthene	0.0018	0.0049 U	0.0099	0.0049	0.0048 U	0.0096	0.0048	0.0047 U	0.0095	0.0047	NA	NA	NA	0.0049 U	0.0098	0.0049	0.0049 U	0.0098	0.0049
Benzo(k)fluoranthene	0.0018	0.0049 U	0.0099	0.0049	0.0048 U	0.0096	0.0048	0.0047 U	0.0095	0.0047	NA	NA	NA	0.0049 U	0.0098	0.0049	0.0049 U	0.0098	0.0049
Total Benzofluoranthenes	0.0018	NA	NA	NA	NA	NA	NA	NA	NA	NA	0.020 UJ	0.020	0.0099	NA	NA	NA	NA	NA	NA
Chrysene	0.018	0.0049 U	0.0099	0.0049	0.0048 U	0.0096	0.0048	0.0047 U	0.0095	0.0047	0.010 U	0.010	0.0046	0.0049 U	0.0098	0.0049	0.0049 U	0.0098	0.0049
Dibenz(a,h)anthracene	0.0018	0.0040 U	0.0099	0.0040	0.0038 U	0.0096	0.0038	0.0038 U	0.0095	0.0038	0.010 U	0.010	0.0048	0.0039 U	0.0098	0.0039	0.0039 U	0.0098	0.0039
Indeno(1,2,3-cd)pyrene	0.0018	0.0040 U	0.0099	0.0040	0.0038 U	0.0096	0.0038	0.0038 U	0.0095	0.0038	0.010 U	0.010	0.0046	0.0039 U	0.0098	0.0039	0.0039 U	0.0098	0.0039
Pyrene	9.8	**0.018** J1	0.049	0.0099	**0.021** J1	0.048	0.010	0.026 J1	0.047	0.0095	NA	NA	NA	0.0098 U	0.049	0.0098	0.0098 U	0.049	0.0098
cPAH TEQ	0.00018	**0.001** J	NA	NA	ND	NA	NA	**0.0005** J	NA	NA	ND	NA	NA	ND	NA	NA	ND	NA	NA
PCBs (µg/L)																			
Method SW8082																			
Aroclor 1016	0.000023	0.0057 U	0.0095	0.0057	0.0057 U	0.0096	0.0057	0.0056 U	0.0094	0.0056	0.010 U	0.010	0.0025	0.0058 U	0.0096	0.0058	0.0058 U	0.0097	0.0058
Aroclor 1221	---	0.0057 U	0.0095	0.0057	0.0057 U	0.0096	0.0057	0.0056 U	0.0094	0.0056	0.010 U	0.010	0.0028	0.0058 U	0.0096	0.0058	0.0058 U	0.0097	0.0058
Aroclor 1232	---	0.0066 U	0.0095	0.0066	0.0067 U	0.0096	0.0067	0.0066 U	0.0094	0.0066	0.010 U	0.010	0.0028	0.0067 U	0.0096	0.0067	0.0068 U	0.0097	0.0068
Aroclor 1242	0.000023	0.0057 U	0.0095	0.0057	0.0057 U	0.0096	0.0057	0.0056 U	0.0094	0.0056	0.010 U	0.010	0.0028	0.0058 U	0.0096	0.0058	0.0058 U	0.0097	0.0058
Aroclor 1248	0.000023	**0.019**	0.0095	0.0047	**0.024**	0.0096	0.0048	**0.019**	0.0094	0.0047	0.010 U	0.010	0.0028	0.0048 U	0.0096	0.0048	0.0048 U	0.0097	0.0048
Aroclor 1254	0.0000055	0.0047 U	0.0095	0.0047	0.0048 U	0.0096	0.0048	0.0047 U	0.0094	0.0047	0.010 U	0.010	0.0028	0.0048 U	0.0096	0.0048	0.0048 U	0.0097	0.0048
Aroclor 1260	0.000023	0.0047 U	0.0095	0.0047	0.0048 U	0.0096	0.0048	0.0047 U	0.0094	0.0047	0.010 U	0.010	0.0028	0.0048 U	0.0096	0.0048	0.0048 U	0.0097	0.0048
Total PCBs	0.000023	**0.019**	NA	NA	**0.024**	NA	NA	**0.019**	NA	NA	ND	NA	NA	ND	NA	NA	ND	NA	NA

TABLE L-1
GROUNDWATER ANALYTICAL RESULTS
BOEING ISAACSON-THOMPSON
REMEDIAL INVESTIGATION

Location:		IT-I-203			IT-I-203			IT-I-203			IT-I-205			IT-I-205			IT-I-205		
Laboratory Sample ID:	Preliminary	6582523/6582524/UM84C			6690483/6690484/6690485/UZ00E			6789053/6789054/6789055/VJ53C			UA27F/UA27N/UA28F/UA28M/UB45F/UB45M			6582521/6582522/UM84B			6690480/6690481/6690482/UZ00D		
Laboratory Data Package ID:	Cleanup	1296009/UM84			1316296/UZ00			1335688/VJ53			UA27/UA28/UB45			1296009/UM84			1316296/UZ00		
Sample Date:	Levels	3/15/2012			6/15/2012			9/13/2012			12/06/2011			3/15/2012			6/15/2012		
		Result	Reporting Limit	Detection Limit	Result	Reporting Limit	Detection Limit	Result	Reporting Limit	Detection Limit	Result	Reporting Limit	Detection Limit	Result	Reporting Limit	Detection Limit	Result	Reporting Limit	Detection Limit
TOTAL PETROLEUM HYDROCARBONS (mg/L)																			
NWTPH-Dx																			
Diesel-Range Organics	0.5	0.070 U	0.25	0.070	0.029 U	0.096	0.029	0.028 U	0.094	0.028	0.10 U	0.10	0.022	0.070 U	0.25	0.070	0.030 U	0.099	0.030
Oil-Range Organics	0.5	1.0 U	3.0	1.0	0.067 U	0.240	0.067	0.066 U	0.240	0.066	0.20 U	0.20	0.044	1.0 U	3.0	1.0	0.070 U	0.250	0.070
NWTPH-G																			
Gasoline-Range Organics	1.0/0.8	0.05 U	0.25	0.05	0.05 U	0.25	0.05	0.05 U	0.25	0.05	0.25 U	0.25	0.06	0.05 U	0.25	0.05	0.05 U	0.25	0.05
TOTAL METALS (µg/L)																			
Method 200.8																			
Antimony	---	**0.77** J1	1.0	0.42	0.33 U	1.0	0.33	0.33 U	1.0	0.33	0.2 U	0.2	0.010	0.42 U	1.0	0.42	0.33 U	1.0	0.33
Arsenic	---	**2.4**	2.0	0.95	**1.5** J1	2.0	0.20	**2.3**	2.0	0.40	**49.3**	0.2	0.048	**31.6**	2.0	0.95	**33.7**	2.0	0.20
Barium	---	**41.2**	2.0	0.69	**31.6**	2.0	0.41	**152**	2.0	0.41	**5.1**	0.5	0.020	**2.4**	2.0	0.69	**3.3**	2.0	0.41
Beryllium	---	0.13 U	0.50	0.13	0.025 U	0.50	0.025	0.025 U	0.50	0.025	0.2 U	0.2	0.021	0.13 U	0.50	0.13	0.025 U	0.50	0.025
Cadmium	---	**0.28** J1	0.50	0.20	0.048 U	0.50	0.048	0.082 U	0.50	0.082	0.1 U	0.1	0.010	0.20 U	0.50	0.20	0.048 U	0.50	0.048
Chromium	---	0.60 U	2.0	0.60	0.10 U	2.0	0.10	0.50 U	2.0	0.50	**0.6**	0.5	0.045	**0.83** J1	2.0	0.60	**0.49** J1	2.0	0.10
Copper	---	**1.4** J1	2.0	0.38	0.15 U	2.0	0.15	**0.60** J1	2.0	0.40	**1.1**	0.5	0.158	0.38 U	2.0	0.38	0.15 U	2.0	0.15
Lead	---	**0.87** J1	1.0	0.080	0.034 U	1.0	0.034	**0.076** J1	1.0	0.034	0.1 U	0.1	0.046	0.080 U	1.0	0.080	0.034 U	1.0	0.034
Nickel	---	**0.81** J1	2.0	0.50	**0.16** J1	2.0	0.13	0.35 U	2.0	0.35	**0.5**	0.5	0.079	0.50 U	2.0	0.50	**0.15** J1	2.0	0.13
Selenium	---	0.27 U	2.0	0.27	0.18 U	2.0	0.18	0.50 U	2.0	0.50	0.5 U	0.5	0.127	0.27 U	2.0	0.27	0.18 U	2.0	0.18
Silver	---	0.098 U	0.50	0.098	0.10 U	0.50	0.10	0.10 U	0.50	0.10	0.2 U	0.2	0.008	0.098 U	0.50	0.098	0.10 U	0.50	0.10
Thallium	---	0.15 U	0.50	0.15	0.029 U	0.50	0.029	0.15 U	0.50	0.15	0.2 U	0.2	0.004	0.15 U	0.50	0.15	0.029 U	0.50	0.029
Zinc	---	**23.9**	15.0	4.0	1.1 U	15.0	1.1	**2.1** J1	15.0	1.1	4 U	4	0.50	4.0 U	15.0	4.0	1.1 U	15.0	1.1
Method SW7196A (mg/L)																			
Chromium VI	0.00058	0.010 U	0.010	0.00300	0.010 U	0.010	0.00300	0.010 U	0.010	0.00300	0.010 U	0.010	0.00300	0.010 U	0.010	0.00300	0.010 U	0.010	0.00300
Method SW7470A/EPA 1631E (ng/L)																			
Mercury	12	**2.49** J1	5.00	1.60	0.225 J1	0.500	0.160	1.60 U	5.00	1.60	20.0 U	20.0	2.60	1.60 U	5.00	1.60	0.160 U	0.500	0.160
DISSOLVED METALS (µg/L)																			
Methods 200.8/SW7196A																			
Antimony	150	**0.86** J1	1.0	0.42	0.33 U	1.0	0.33	0.33 U	1.0	0.33	0.2 U	0.2	0.010	0.42 U	1.0	0.42	0.33 U	1.0	0.33
Arsenic	8	**2.2**	2.0	0.95	**2.0** J1	2.0	0.20	**2.3**	2.0	0.40	**46.9**	0.2	0.048	**31.2**	2.0	0.95	**32.4**	2.0	0.20
Barium	770	**38.4**	2.0	0.69	**31.2**	2.0	0.41	**147**	2.0	0.41	**4.7**	0.5	0.020	**2.2**	2.0	0.69	**2.8**	2.0	0.41
Beryllium	12	0.13 U	0.50	0.13	0.025 U	0.50	0.025	0.025 U	0.50	0.025	0.2 U	0.2	0.021	0.13 U	0.50	0.13	0.025 U	0.50	0.025
Cadmium	0.25	0.20 U	0.50	0.20	0.048 U	0.50	0.048	**0.084** J1	0.50	0.082	0.1 U	0.1	0.010	0.20 U	0.50	0.20	0.048 U	0.50	0.048
Chromium	74	0.60 U	2.0	0.60	0.10 U	2.0	0.10	0.50 U	2.0	0.50	0.5 U	0.5	0.045	**0.84** J1	2.0	0.60	**0.38** J1	2.0	0.10
Copper	8	**0.42** J1	2.0	0.38	0.15 U	2.0	0.15	0.40 U	2.0	0.40	0.5 U	0.5	0.158	0.38 U	2.0	0.38	0.15 U	2.0	0.15
Lead	2.5	0.080 U	1.0	0.080	0.034 U	1.0	0.034	0.034 U	1.0	0.034	0.1 U	0.1	0.046	0.080 U	1.0	0.080	0.034 U	1.0	0.034
Nickel	8.2	0.50 U	2.0	0.50	**0.16** J1	2.0	0.13	0.35 U	2.0	0.35	**0.6**	0.5	0.079	0.50 U	2.0	0.50	0.13 U	2.0	0.13
Selenium	5	0.27 U	2.0	0.27	0.18 U	2.0	0.18	0.50 U	2.0	0.50	0.5 U	0.5	0.127	0.27 U	2.0	0.27	0.18 U	2.0	0.18
Silver	22	0.098 U	0.50	0.098	0.10 U	0.50	0.10	0.10 U	0.50	0.10	0.2 U	0.2	0.008	0.098 U	0.50	0.098	0.10 U	0.50	0.10
Thallium	0.47	0.15 U	0.50	0.15	0.029 U	0.50	0.029	0.15 U	0.50	0.15	0.2 U	0.2	0.004	0.15 U	0.50	0.15	0.029 U	0.50	0.029
Zinc	56	4.0 U	15.0	4.0	1.1 U	15.0	1.1	1.1 U	15.0	1.1	4 U	4	0.50	4.0 U	15.0	4.0	**1.5** J1	15.0	1.1
Method SW7470A/EPA 1631E (ng/L)																			
Mercury	12	**1.71** J1	5.00	1.60	**1.36**	0.500	0.160	**2.58** J1	5.00	1.60	20.0 U	20.0	2.60	**2.02** J1	5.00	1.60	0.160 U	0.500	0.160
CONVENTIONALS (mg/L)																			
Chloride (Method 300.0)	---	NA	NA	NA	**1030**	200	100	**4550**	400	200	NA	NA	NA	NA	NA	NA	**5.2**	0.40	0.20
Nitrate (Method 300.0)	---	0.050 U	0.10	0.050	0.050 U	0.10	0.050	0.050 U	0.10	0.050	0.1 U	0.1	0.007	0.050 U	0.10	0.050	0.050 U	0.10	0.050
Sulfate (Method 300.0)	---	**299**	20.0	6.0	**405**	50.0	15.0	**542**	100	30.0	**0.1**	0.1	0.059	**0.79** J1	1.0	0.30	0.30 U	1.0	0.30
Total Dissolved Solids (Method 160.1)	---	**3540**	600	194	**1770**	240	77.6	**7240**	600	194	**244**	5.0	5.00	**152**	30.0	9.7	**154**	30.0	9.7
FIELD PARAMETERS																			
Temperature (°C)	---	12.86	NA	NA	13.43	NA	NA	14.79	NA	NA	17.71	NA	NA	17.04	NA	NA	17.70	NA	NA
Conductivity (uS/cm)	---	5012	NA	NA	2229	NA	NA	9596	NA	NA	476	NA	NA	235	NA	NA	236	NA	NA
Dissolved Oxygen (mg/L)	---	0.81	NA	NA	0.32	NA	NA	0.44	NA	NA	0.46	NA	NA	1.70	NA	NA	0.32	NA	NA
pH (SU)	---	8.28	NA	NA	10.85	NA	NA	9.13	NA	NA	5.44	NA	NA	6.86	NA	NA	5.90	NA	NA
ORP (mV)	---	-271.3	NA	NA	-283.1	NA	NA	-199.3	NA	NA	-88.8	NA	NA	-101.6	NA	NA	-129.4	NA	NA
Turbidity (NTU)	---	2.50	NA	NA	0.53	NA	NA	8.39	NA	NA	3.02	NA	NA	4.63	NA	NA	1.14	NA	NA
Ferrous Iron (mg/L)	---	0.6	NA	NA	0.0	NA	NA	0.0	NA	NA	NA	NA	NA	0.8	NA	NA	5.2	NA	NA

TABLE L-1
GROUNDWATER ANALYTICAL RESULTS
BOEING ISAACSON-THOMPSON
REMEDIAL INVESTIGATION

Location:		IT-I-205			IT-I-206			IT-I-206			IT-I-206			IT-I-206			IT-MW-1		
Laboratory Sample ID:	Preliminary	6789062/6789063/6789064/VJ53F			UA27D/UA27L/UA28D/UA28K/UB45D/UB45K			6577003/6577004/UM00B			6693953/6693954/6693955/UZ37D			6790518/6790519/6790520/VJ63G			UA27B/UA27J/UA28B/UA28I/UB45B/UB45I		
Laboratory Data Package ID:	Cleanup	1335688/VJ53			UA27/UA28/UB45			1295065/UM00			1317022/UZ37			1335985/VJ63			UA27/UA28/UB45		
Sample Date:	Levels	9/13/2012			12/06/2011			03/12/2012			6/19/2012			9/14/2012			12/06/2011		
		Result	Reporting Limit	Detection Limit	Result	Reporting Limit	Detection Limit	Result	Reporting Limit	Detection Limit	Result	Reporting Limit	Detection Limit	Result	Reporting Limit	Detection Limit	Result	Reporting Limit	Detection Limit
VOLATILES (µg/L)																			
Method SW8260C																			
Acetone	110,000	3.0 U	5.0	3.0	1.9 UJ2	5.0	0.72	3.0 U	5.0	3.0	3.0 U	5.0	3.0	3.0 U	5.0	3.0	1.8 UJ2	5.0	0.72
Acrolein	---	5.0 U	25	5.0	5.0 UJ	5.0	0.29	5.0 U	25	5.0	5.0 U	25	5.0	5.0 U	25	5.0	5.0 UJ	5.0	0.29
Acrylonitrile	0.057	1.0 U	5.0	1.0	1.0 U	1.0	0.18	1.0 U	5.0	1.0	1.0 U	5.0	1.0	1.0 U	5.0	1.0	1.0 U	1.0	0.18
Benzene	2	0.1 U	0.2	0.1	0.2 U	0.2	0.06	0.1 U	0.2	0.1	0.1 U	0.2	0.1	0.1 U	0.2	0.1	0.2 U	0.2	0.06
Bromobenzene	---	0.1 U	0.5	0.1	0.2 U	0.2	0.05	0.1 U	0.5	0.1	0.1 U	0.5	0.1	0.1 U	0.5	0.1	0.2 U	0.2	0.05
Bromochloromethane	---	0.1 U	0.5	0.1	0.2 U	0.2	0.07	0.1 U	0.5	0.1	0.1 U	0.5	0.1	0.1 U	0.5	0.1	0.2 U	0.2	0.07
Bromodichloromethane	17	0.1 U	0.5	0.1	0.2 U	0.2	0.05	0.1 U	0.5	0.1	0.1 U	0.5	0.1	0.1 U	0.5	0.1	0.2 U	0.2	0.05
Bromoform	---	0.1 U	0.5	0.1	0.2 U	0.2	0.07	0.1 U	0.5	0.1	0.1 UJ	0.5	0.1	0.1 U	0.5	0.1	0.2 U	0.2	0.07
Bromomethane	---	0.1 U	0.5	0.1	1.0 U	1.0	0.04	0.1 U	0.5	0.1	0.1 U	0.5	0.1	0.1 U	0.5	0.1	1.0 U	1.0	0.04
2-Butanone	73,000	1.0 U	5.0	1.0	5.0 U	5.0	0.81	1.0 U	5.0	1.0	1.0 U	5.0	1.0	1.0 U	5.0	1.0	5.0 U	5.0	0.81
n-Butylbenzene	780	0.1 U	0.5	0.1	0.2 U	0.2	0.11	0.1 U	0.5	0.1	0.1 U	0.5	0.1	0.1 U	0.5	0.1	0.2 U	0.2	0.11
sec-Butylbenzene	---	0.1 U	0.5	0.1	0.2 U	0.2	0.08	0.1 U	0.5	0.1	0.1 U	0.5	0.1	0.1 U	0.5	0.1	0.2 U	0.2	0.08
tert-Butylbenzene	---	0.1 U	0.5	0.1	0.2 U	0.2	0.06	0.1 U	0.5	0.1	0.1 U	0.5	0.1	0.1 U	0.5	0.1	0.2 U	0.2	0.06
Carbon Disulfide	3900	0.4 U	0.5	0.4	0.2 U	0.2	0.09	0.4 U	0.5	0.4	0.4 U	0.5	0.4	0.4 U	0.5	0.4	0.2 U	0.2	0.09
Carbon Tetrachloride	0.46	0.1 U	0.2	0.1	0.2 U	0.2	0.08	0.1 U	0.2	0.1	0.1 U	0.2	0.1	0.1 U	0.2	0.1	0.2 U	0.2	0.08
Chlorobenzene	270	0.1 U	0.5	0.1	0.2 U	0.2	0.04	0.1 U	0.5	0.1	0.1 U	0.5	0.1	0.1 U	0.5	0.1	0.2 U	0.2	0.04
Chloroethane	21,000	0.1 U	0.5	0.1	0.2 U	0.2	0.15	0.1 U	0.5	0.1	0.1 U	0.5	0.1	0.1 U	0.5	0.1	0.2 U	0.2	0.15
Chloroform	9.4	0.1 U	0.2	0.1	0.2 U	0.2	0.08	0.1 U	0.2	0.1	0.1 U	0.2	0.1	0.1 U	0.2	0.1	0.2 U	0.2	0.08
Chloromethane	10.3	0.2 U	0.5	0.2	0.5 U	0.5	0.10	0.2 U	0.5	0.2	0.2 U	0.5	0.2	0.2 U	0.5	0.2	0.5 U	0.5	0.10
2-Chlorotoluene	---	0.1 U	0.5	0.1	0.2 U	0.2	0.04	0.1 U	0.5	0.1	0.1 U	0.5	0.1	0.1 U	0.5	0.1	0.2 U	0.2	0.04
4-Chlorotoluene	2600	0.1 U	0.5	0.1	0.2 U	0.2	0.07	0.1 U	0.5	0.1	0.1 U	0.5	0.1	0.1 U	0.5	0.1	0.2 U	0.2	0.07
1,2-Dibromo-3-chloropropane	---	0.2 U	0.5	0.2	0.5 UJ	0.5	0.21	0.2 U	0.5	0.2	0.2 U	0.5	0.2	0.2 U	0.5	0.2	0.5 UJ	0.5	0.21
Dibromochloromethane	---	0.1 U	0.5	0.1	0.2 U	0.2	0.09	0.1 U	0.5	0.1	0.1 U	0.5	0.1	0.1 U	0.5	0.1	0.2 U	0.2	0.09
Dibromomethane	---	0.1 U	0.5	0.1	0.2 U	0.2	0.08	0.1 U	0.5	0.1	0.1 U	0.5	0.1	0.1 U	0.5	0.1	0.2 U	0.2	0.08
trans-1,4-Dichloro-2-butene	---	1.0 U	5.0	1.0	1.0 UJ	1.0	0.24	1.0 U	5.0	1.0	1.0 UJ	5.0	1.0	1.0 U	5.0	1.0	1.0 UJ	1.0	0.24
1,2-Dichlorobenzene	440	0.1 U	0.5	0.1	0.2 U	0.2	0.06	0.1 U	0.5	0.1	0.1 U	0.5	0.1	0.1 U	0.5	0.1	0.2 U	0.2	0.06
1,3-Dichlorobenzene	960	0.1 U	0.5	0.1	0.2 U	0.2	0.04	0.1 U	0.5	0.1	0.1 U	0.5	0.1	0.1 U	0.5	0.1	0.2 U	0.2	0.04
1,4-Dichlorobenzene	1.7	0.1 U	0.5	0.1	0.2 U	0.2	0.06	0.1 U	0.5	0.1	0.1 U	0.5	0.1	0.1 U	0.5	0.1	0.2 U	0.2	0.06
1,1-Dichloroethane	33	0.1 U	0.5	0.1	0.2 U	0.2	0.05	**0.1** J1	0.5	0.1	**0.1** J1	0.5	0.1	**0.1** J1	0.5	0.1	0.2 U	0.2	0.05
1,2-Dichloroethane	3.6	0.1 U	0.2	0.1	0.2 U	0.2	0.08	0.1 U	0.2	0.1	0.1 U	0.2	0.1	0.1 U	0.2	0.1	0.2 U	0.2	0.08
1,1-Dichloroethene	3.2	0.1 U	0.2	0.1	**0.1** J1	0.2	0.09	0.1 U	0.2	0.1	0.1 U	0.2	0.1	0.1 U	0.2	0.1	0.2 U	0.2	0.09
cis-1,2-Dichloroethene	130	0.1 U	0.2	0.1	**0.2**	0.2	0.10	**0.2** J1	0.2	0.1	**0.3**	0.2	0.1	**0.2**	0.2	0.1	**0.2**	0.2	0.10
trans-1,2-Dichloroethene	940	0.1 U	0.2	0.1	0.2 U	0.2	0.08	0.1 U	0.2	0.1	0.1 U	0.2	0.1	0.1 U	0.2	0.1	0.2 U	0.2	0.08
1,2-Dichloropropane	3.7	0.1 U	0.5	0.1	0.2 U	0.2	0.09	0.1 U	0.5	0.1	0.1 U	0.5	0.1	0.1 U	0.5	0.1	0.2 U	0.2	0.09
1,3-Dichloropropane	---	0.1 U	0.5	0.1	0.2 U	0.2	0.02	0.1 U	0.5	0.1	0.1 U	0.5	0.1	0.1 U	0.5	0.1	0.2 U	0.2	0.02
2,2-Dichloropropane	---	0.1 U	0.5	0.1	0.2 U	0.2	0.08	0.1 U	0.5	0.1	0.1 U	0.5	0.1	0.1 U	0.5	0.1	0.2 U	0.2	0.08
1,1-Dichloropropene	---	0.1 U	0.5	0.1	0.2 U	0.2	0.09	0.1 U	0.5	0.1	0.1 U	0.5	0.1	0.1 U	0.5	0.1	0.2 U	0.2	0.09
cis-1,3-Dichloropropene	---	0.1 U	0.2	0.1	0.2 U	0.2	0.06	0.1 U	0.2	0.1	0.1 U	0.2	0.1	0.1 U	0.2	0.1	0.2 U	0.2	0.06
trans-1,3-Dichloropropene	---	0.1 U	0.2	0.1	0.2 U	0.2	0.06	0.1 U	0.2	0.1	0.1 U	0.2	0.1	0.1 U	0.2	0.1	0.2 U	0.2	0.06
Ethylbenzene	1.7	0.1 U	0.5	0.1	0.2 U	0.2	0.09	0.1 U	0.5	0.1	0.1 U	0.5	0.1	0.1 U	0.5	0.1	0.2 U	0.2	0.09
Ethylene Dibromide	---	0.1 U	0.5	0.1	0.2 U	0.2	0.08	0.1 U	0.5	0.1	0.1 U	0.5	0.1	0.1 U	0.5	0.1	0.2 U	0.2	0.08
Hexachlorobutadiene	---	0.1 U	0.5	0.1	0.5 U	0.5	0.11	0.1 U	0.5	0.1	0.1 U	0.5	0.1	0.1 U	0.5	0.1	0.5 U	0.5	0.11
2-Hexanone	3200	1.0 U	5.0	1.0	5.0 U	5.0	0.31	1.0 U	5.0	1.0	1.0 U	5.0	1.0	1.0 U	5.0	1.0	5.0 U	5.0	0.31
Isopropylbenzene	270	0.1 U	0.5	0.1	0.2 U	0.2	0.06	0.1 U	0.5	0.1	0.1 U	0.5	0.1	0.1 U	0.5	0.1	0.2 U	0.2	0.06
4-Isopropyltoluene	---	0.1 U	0.5	0.1	0.2 U	0.2	0.08	0.1 U	0.5	0.1	0.1 U	0.5	0.1	0.1 U	0.5	0.1	0.2 U	0.2	0.08
Methyl Iodide	---	0.1 U	0.5	0.1	1.0 U	1.0	0.04	0.1 U	0.5	0.1	0.1 U	0.5	0.1	0.1 U	0.5	0.1	1.0 U	1.0	0.04
4-Methyl-2-Pentanone (MIBK)	19,000	1.0 U	5.0	1.0	5.0 U	5.0	0.38	1.0 U	5.0	1.0	1.0 U	5.0	1.0	1.0 U	5.0	1.0	5.0 U	5.0	0.38
Methylene Chloride	230	0.2 U	0.5	0.2	0.5 U	0.5	0.39	0.2 U	0.5	0.2	0.2 U	0.5	0.2	0.2 U	0.5	0.2	0.5 U	0.5	0.39
Naphthalene	26	0.1 U	0.5	0.1	0.5 U	0.5	0.07	0.1 U	0.5	0.1	0.1 U	0.5	0.1	0.1 U	0.5	0.1	0.5 U	0.5	0.07
n-Propylbenzene	530	0.1 U	0.5	0.1	0.2 U	0.2	0.08	0.1 U	0.5	0.1	0.1 U	0.5	0.1	0.1 U	0.5	0.1	0.2 U	0.2	0.08
Styrene	77,000	0.1 U	0.5	0.1	0.2 U	0.2	0.07	0.1 U	0.5	0.1	0.1 U	0.5	0.1	0.1 U	0.5	0.1	0.2 U	0.2	0.07
1,1,1,2-Tetrachloroethane	---	0.1 U	0.5	0.1	0.2 U	0.2	0.07	0.1 U	0.5	0.1	0.1 U	0.5	0.1	0.1 U	0.5	0.1	0.2 U	0.2	0.07
1,1,2,2-Tetrachloroethane	0.33	0.1 U	0.2	0.1	0.2 U	0.2	0.07	0.1 U	0.2	0.1	0.1 U	0.2	0.1	0.1 U	0.2	0.1	0.2 U	0.2	0.07
Tetrachloroethene	3.3	0.1 U	0.2	0.1	0.2 U	0.2	0.09	0.1 U	0.2	0.1	0.1 U	0.2	0.1	0.1 U	0.2	0.1	0.2 U	0.2	0.09
Toluene	1300	0.1 U	0.2	0.1	0.2 U	0.2	0.06	0.1 U	0.2	0.1	0.1 U	0.2	0.1	0.1 U	0.2	0.1	0.2 U	0.2	0.06
1,1,2-Trichloro-1,2,2-trifuoroethane	59,000	0.2 U	0.5	0.2	0.2 U	0.2	0.11	0.2 U	0.5	0.2	0.2 U	0.5	0.2	0.2 U	0.5	0.2	0.2 U	0.2	0.11
1,2,3-Trichlorobenzene	---	0.1 U	0.5	0.1	0.5 U	0.5	0.09	0.1 U	0.5	0.1	0.1 U	0.5	0.1	0.1 U	0.5	0.1	0.5 U	0.5	0.09

TABLE L-1
GROUNDWATER ANALYTICAL RESULTS
BOEING ISAACSON-THOMPSON
REMEDIAL INVESTIGATION

Location:		IT-I-205			IT-I-206			IT-I-206			IT-I-206			IT-I-206			IT-MW-1		
Laboratory Sample ID:	Preliminary	6789062/6789063/6789064/VJ53F			UA27D/UA27L/UA28D/UA28K/UB45D/UB45K			6577003/6577004/UM00B			6693953/6693954/6693955/UZ37D			6790518/6790519/6790520/VJ63G			UA27B/UA27J/UA28B/UA28I/UB45B/UB45I		
Laboratory Data Package ID:	Cleanup	1335688/VJ53			UA27/UA28/UB45			1295065/UM00			1317022/UZ37			1335985/VJ63			UA27/UA28/UB45		
Sample Date:	Levels	9/13/2012			12/06/2011			03/12/2012			6/19/2012			9/14/2012			12/06/2011		
		Result	Reporting Limit	Detection Limit	Result	Reporting Limit	Detection Limit	Result	Reporting Limit	Detection Limit	Result	Reporting Limit	Detection Limit	Result	Reporting Limit	Detection Limit	Result	Reporting Limit	Detection Limit
1,2,4-Trichlorobenzene	1.13	0.1 U	0.5	0.1	0.5 U	0.5	0.10	0.1 U	0.5	0.1	0.1 U	0.5	0.1	0.1 U	0.5	0.1	0.5 U	0.5	0.10
1,1,1-Trichloroethane	46,000	0.1 U	0.5	0.1	0.2 U	0.2	0.09	0.1 U	0.5	0.1	0.1 U	0.5	0.1	0.1 U	0.5	0.1	0.2 U	0.2	0.09
1,1,2-Trichloroethane	2.3	0.1 U	0.2	0.1	0.2 U	0.2	0.04	0.1 U	0.2	0.1	0.1 U	0.2	0.1	0.1 U	0.2	0.1	0.2 U	0.2	0.04
Trichloroethene	1.4	0.1 U	0.2	0.1	0.2 U	0.2	0.08	0.1 U	0.2	0.1	0.1 U	0.2	0.1	0.1 U	0.2	0.1	0.2 U	0.2	0.08
Trichlorofluoromethane	6900	0.1 U	0.5	0.1	0.2 U	0.2	0.09	0.1 U	0.5	0.1	0.1 U	0.5	0.1	0.1 U	0.5	0.1	0.2 U	0.2	0.09
1,2,3-Trichloropropane	---	0.3 U	1.0	0.3	0.5 U	0.5	0.23	0.3 U	1.0	0.3	0.3 U	1.0	0.3	0.3 U	1.0	0.3	0.5 U	0.5	0.23
1,2,4-Trimethylbenzene	303	0.1 U	0.5	0.1	0.2 U	0.2	0.06	0.1 U	0.5	0.1	0.1 U	0.5	0.1	0.1 U	0.5	0.1	0.2 U	0.2	0.06
1,3,5-Trimethylbenzene	303	0.1 U	0.5	0.1	0.2 U	0.2	0.06	0.1 U	0.5	0.1	0.1 U	0.5	0.1	0.1 U	0.5	0.1	0.2 U	0.2	0.06
Vinyl Acetate	---	0.2 U	0.5	0.2	1.0 U	1.0	0.07	0.2 U	0.5	0.2	0.2 U	0.5	0.2	0.2 U	0.5	0.2	1.0 U	1.0	0.07
Vinyl Chloride	0.53	0.1 U	0.2	0.1	**0.4**	0.2	0.08	**0.5**	0.2	0.1	**0.4**	0.2	0.1	**0.3**	0.2	0.1	**0.2**	0.2	0.08
m,p-Xylene	1300	**0.1** J1	0.5	0.1	0.4 U	0.4	0.14	0.1 U	0.5	0.1	0.1 U	0.5	0.1	0.1 U	0.5	0.1	0.4 U	0.4	0.14
o-Xylene	1600	0.1 U	0.5	0.1	0.2 U	0.2	0.06	0.1 U	0.5	0.1	0.1 U	0.5	0.1	0.1 U	0.5	0.1	0.2 U	0.2	0.06
2-Chloroethylvinylether	---	NA	NA	NA	1.0 U	1.0	0.09	NA	NA	NA	NA	NA	NA	NA	NA	NA	1.0 U	1.0	0.09
Bromoethane	---	NA	NA	NA	0.2 U	0.2	0.09	NA	NA	NA	NA	NA	NA	NA	NA	NA	0.2 U	0.2	0.09
VOLATILES (µg/L)																			
Method SW8260C-SIM																			
Tetrachloroethene	3.3	0.010 U	0.020	0.010	0.020 U	0.020	0.0036	0.010 U	0.020	0.010	**0.010** J1	0.020	0.010	0.010 U	0.020	0.010	0.020 U	0.020	0.0036
Vinyl Chloride	0.53	0.010 U	0.020	0.010	**0.31**	0.020	0.0022	**0.46**	0.020	0.010	**0.37**	0.020	0.010	**0.24**	0.020	0.010	**0.17**	0.020	0.0022
Acrylonitrile	0.057	NA	NA	NA	0.050 U	0.050	0.0158	NA	NA	NA	NA	NA	NA	NA	NA	NA	0.050 U	0.050	0.0158
SEMIVOLATILES (µg/L)																			
Method SW8270D																			
Acenaphthene	120	0.1 U	0.5	0.1	1.0 U	1.0	0.55	0.1 U	0.5	0.1	0.1 U	0.5	0.1	0.1 U	0.5	0.1	**8.0**	1.0	0.55
Acenaphthylene	---	0.1 U	0.5	0.1	1.0 U	1.0	0.48	0.1 U	0.5	0.1	0.1 U	0.5	0.1	0.1 U	0.5	0.1	1.0 U	1.0	0.48
Anthracene	200	0.1 U	0.5	0.1	1.0 U	1.0	0.53	0.1 U	0.5	0.1	0.1 U	0.5	0.1	0.1 U	0.5	0.1	1.0 U	1.0	0.53
Benzo(a)anthracene	0.0018	0.1 U	0.5	0.1	1.0 U	1.0	0.52	0.1 U	0.5	0.1	0.1 U	0.5	0.1	0.1 U	0.5	0.1	1.0 U	1.0	0.52
Benzo(a)pyrene	0.00018	0.1 U	0.5	0.1	1.0 U	1.0	0.48	0.1 U	0.5	0.1	0.1 U	0.5	0.1	0.1 U	0.5	0.1	1.0 U	1.0	0.48
Benzo(b)fluoranthene	0.0018	0.1 U	0.5	0.1	NA	NA	NA	0.1 U	0.5	0.1	0.1 U	0.5	0.1	0.1 U	0.5	0.1	NA	NA	NA
Benzo(g,h,i)perylene	---	0.1 U	0.5	0.1	1.0 U	1.0	0.55	0.1 U	0.5	0.1	0.1 U	0.5	0.1	0.1 U	0.5	0.1	1.0 U	1.0	0.55
Benzo(k)fluoranthene	0.0018	0.1 U	0.5	0.1	NA	NA	NA	0.1 U	0.5	0.1	0.1 U	0.5	0.1	0.1 U	0.5	0.1	NA	NA	NA
Total Benzofluoranthenes	0.0018	NA	NA	NA	1.0 U	1.0	0.48	NA	NA	NA	NA	NA	NA	NA	NA	NA	1.0 U	1.0	0.48
Benzoic Acid	2,240	6 UJ	14	6	10 UJ	10	5.1	6 UJ	14	6	7 U	16	7	6 U	16	6	10 UJ	10	5.1
Benzyl Alcohol	182	5 U	14	5	5.0 U	5.0	2.0	5 U	14	5	5 U	16	5	5 U	16	5	5.0 U	5.0	2.0
4-Bromophenyl-phenylether	---	0.5 U	1	0.5	1.0 U	1.0	0.42	0.5 U	1	0.5	0.5 U	1	0.5	0.5 U	1	0.5	1.0 U	1.0	0.42
Butylbenzylphthalate	0.41	2 U	5	2	1.0 U	1.0	0.56	2 U	5	2	2 U	5	2	2 U	5	2	1.0 U	1.0	0.56
Di-n-Butylphthalate	47	2 U	5	2	1.0 U	1.0	0.54	2 U	5	2	2 U	5	2	2 U	5	2	1.0 U	1.0	0.54
Carbazole	---	0.5 U	1	0.5	1.0 U	1.0	0.31	0.5 U	1	0.5	0.5 U	1	0.5	0.5 U	1	0.5	1.0 U	1.0	0.31
4-Chloro-3-methylphenol	3700	0.5 U	1	0.5	5.0 U	5.0	2.4	0.5 U	1	0.5	0.5 U	1	0.5	0.5 U	1	0.5	5.0 U	5.0	2.4
4-Chloroaniline	---	0.5 U	1	0.5	5.0 U	5.0	2.6	0.5 U	1	0.5	0.5 U	1	0.5	0.5 U	1	0.5	5.0 U	5.0	2.6
bis(2-Chloroethoxy) Methane	---	0.5 U	1	0.5	1.0 U	1.0	0.56	0.5 U	1	0.5	0.5 U	1	0.5	0.5 U	1	0.5	1.0 U	1.0	0.56
Bis-(2-Chloroethyl) Ether	---	0.5 U	1	0.5	1.0 U	1.0	0.58	0.5 U	1	0.5	0.5 U	1	0.5	0.5 U	1	0.5	1.0 U	1.0	0.58
2-Chloronaphthalene	---	0.4 U	1	0.4	1.0 U	1.0	0.48	0.4 U	1	0.4	0.4 U	1	0.4	0.4 U	1	0.4	1.0 U	1.0	0.48
2-Chlorophenol	---	0.5 U	1	0.5	1.0 U	1.0	0.53	0.5 U	1	0.5	0.5 U	1	0.5	0.5 U	1	0.5	1.0 U	1.0	0.53
4-Chlorophenyl-phenylether	---	0.5 U	1	0.5	1.0 U	1.0	0.45	0.5 U	1	0.5	0.5 U	1	0.5	0.5 U	1	0.5	1.0 U	1.0	0.45
2,2'-Oxybis(1-Chloropropane)	---	0.5 U	1	0.5	1.0 U	1.0	0.62	0.5 U	1	0.5	0.5 U	1	0.5	0.5 U	1	0.5	1.0 U	1.0	0.62
Chrysene	0.018	0.1 U	0.5	0.1	1.0 U	1.0	0.55	0.1 U	0.5	0.1	0.1 U	0.5	0.1	0.1 U	0.5	0.1	1.0 U	1.0	0.55
Dibenz(a,h)anthracene	0.0018	0.1 U	0.5	0.1	1.0 U	1.0	0.48	0.1 U	0.5	0.1	0.1 U	0.5	0.1	0.1 U	0.5	0.1	1.0 U	1.0	0.48
Dibenzofuran	1.3	0.5 U	1	0.5	1.0 U	1.0	0.48	0.5 U	1	0.5	0.5 U	1	0.5	0.5 U	1	0.5	1.0 U	1.0	0.48
1,2-Dichlorobenzene	440	0.5 U	1	0.5	1.0 U	1.0	0.36	0.5 U	1	0.5	0.5 U	1	0.5	0.5 U	1	0.5	1.0 U	1.0	0.36
1,3-Dichlorobenzene	---	0.5 U	1	0.5	1.0 U	1.0	0.36	0.5 U	1	0.5	0.5 U	1	0.5	0.5 U	1	0.5	1.0 U	1.0	0.36
1,4-Dichlorobenzene	1.7	0.5 U	1	0.5	1.0 U	1.0	0.40	0.5 U	1	0.5	0.5 U	1	0.5	0.5 U	1	0.5	1.0 U	1.0	0.40
3,3'-Dichlorobenzidine	---	2 U	5	2	5.0 U	5.0	1.5	2 U	5	2	2 U	5	2	2 U	5	2	5.0 U	5.0	1.5
2,4-Dichlorophenol	---	0.5 U	1	0.5	5.0 U	5.0	2.6	0.5 U	1	0.5	0.5 U	1	0.5	0.5 U	1	0.5	5.0 U	5.0	2.6
Diethylphthalate	4,236	2 U	5	2	1.0 U	1.0	0.58	2 U	5	2	2 U	5	2	2 U	5	2	1.0 U	1.0	0.58
2,4-Dimethylphenol	660	0.5 U	1	0.5	1.0 U	1.0	0.36	0.5 U	1	0.5	0.5 U	1	0.5	**1**	1	0.5	1.0 U	1.0	0.36
Dimethylphthalate	1,100,000	2 U	5	2	1.0 U	1.0	0.53	2 U	5	2	2 U	5	2	2 U	5	2	1.0 U	1.0	0.53
4,6-Dinitro-2-Methylphenol	---	5 U	14	5	10 U	10	3.1	5 U	14	5	5 U	16	5	5 U	16	5	10 U	10	3.1
2,4-Dinitrophenol	---	10 U	29	10	10 U	10	3.5	10 U	29	10	11 U	33	11	11 U	32	11	10 U	10	3.5
2,4-Dinitrotoluene	---	1 U	5	1	5.0 U	5.0	2.5	1 U	5	1	1 U	5	1	1 U	5	1	5.0 U	5.0	2.5
2,6-Dinitrotoluene	---	0.5 U	1	0.5	5.0 U	5.0	2.4	0.5 U	1	0.5	0.5 U	1	0.5	0.5 U	1	0.5	5.0 U	5.0	2.4
bis(2-Ethylhexyl)phthalate	1.2	2 U	5	2	1.0 U	1.0	1.9	2 U	5	2	2 U	5	2	2 U	5	2	1.0 U	1.0	1.9

TABLE L-1
GROUNDWATER ANALYTICAL RESULTS
BOEING ISAACSON-THOMPSON
REMEDIAL INVESTIGATION

Location:		IT-I-205			IT-I-206			IT-I-206			IT-I-206			IT-I-206			IT-MW-1		
Laboratory Sample ID:	Preliminary	6789062/6789063/6789064/VJ53F			UA27D/UA27L/UA28D/UA28K/UB45D/UB45K			6577003/6577004/UM00B			6693953/6693954/6693955/UZ37D			6790518/6790519/6790520/VJ63G			UA27B/UA27J/UA28B/UA28I/UB45B/UB45I		
Laboratory Data Package ID:	Cleanup	1335688/VJ53			UA27/UA28/UB45			1295065/UM00			1317022/UZ37			1335985/VJ63			UA27/UA28/UB45		
Sample Date:	Levels	9/13/2012			12/06/2011			03/12/2012			6/19/2012			9/14/2012			12/06/2011		
		Result	Reporting Limit	Detection Limit	Result	Reporting Limit	Detection Limit	Result	Reporting Limit	Detection Limit	Result	Reporting Limit	Detection Limit	Result	Reporting Limit	Detection Limit	Result	Reporting Limit	Detection Limit
Fluoranthene	11	0.1 U	0.5	0.1	1.0 U	1.0	0.52	0.1 U	0.5	0.1	0.1 U	0.5	0.1	0.1 U	0.5	0.1	1.0 U	1.0	0.52
Fluorene	45	0.1 U	0.5	0.1	1.0 U	1.0	0.56	0.1 U	0.5	0.1	0.1 U	0.5	0.1	0.1 U	0.5	0.1	1.0 U	1.0	0.56
Hexachlorobenzene	---	0.1 U	0.5	0.1	1.0 U	1.0	0.47	0.1 U	0.5	0.1	0.1 U	0.5	0.1	0.1 U	0.5	0.1	1.0 U	1.0	0.47
Hexachlorobutadiene	---	0.5 U	1	0.5	1.0 U	1.0	0.31	0.5 U	1	0.5	0.5 U	1	0.5	0.5 U	1	0.5	1.0 U	1.0	0.31
Hexachlorocyclopentadiene	---	5 U	14	5	5.0 U	5.0	1.2	5 U	14	5	5 U	16	5	5 U	16	5	5.0 U	5.0	1.2
Hexachloroethane	---	1 U	5	1	1.0 U	1.0	0.35	1 U	5	1	1 U	5	1	1 U	5	1	1.0 U	1.0	0.35
Indeno(1,2,3-cd)pyrene	0.0018	0.1 U	0.5	0.1	1.0 U	1.0	0.48	0.1 U	0.5	0.1	0.1 U	0.5	0.1	0.1 U	0.5	0.1	1.0 U	1.0	0.48
Isophorone	---	0.5 U	1	0.5	1.0 U	1.0	0.48	0.5 U	1	0.5	0.5 U	1	0.5	0.5 U	1	0.5	1.0 U	1.0	0.48
1-Methylnaphthalene	2.3	0.1 U	0.5	0.1	1.0 U	1.0	0.48	0.1 U	0.5	0.1	0.1 U	0.5	0.1	0.1 U	0.5	0.1	1.0 U	1.0	0.48
2-Methylnaphthalene	64	0.1 U	0.5	0.1	1.0 U	1.0	0.48	0.1 U	0.5	0.1	0.1 U	0.5	0.1	0.1 U	0.5	0.1	1.0 U	1.0	0.48
2-Methylphenol	3100	0.5 U	1	0.5	1.0 U	1.0	0.53	0.5 U	1	0.5	0.5 U	1	0.5	0.5 U	1	0.5	1.0 U	1.0	0.53
4-Methylphenol	330	0.5 U	1	0.5	1.0 U	1.0	0.52	0.5 U	1	0.5	0.5 U	1	0.5	0.5 U	1	0.5	1.0 U	1.0	0.52
Naphthalene	26	0.1 U	0.5	0.1	1.0 U	1.0	0.52	0.1 U	0.5	0.1	0.1 U	0.5	0.1	0.1 U	0.5	0.1	1.0 U	1.0	0.52
2-Nitroaniline	---	0.5 U	1	0.5	5.0 U	5.0	2.6	0.5 U	1	0.5	0.5 U	1	0.5	0.5 U	1	0.5	5.0 U	5.0	2.6
3-Nitroaniline	---	0.5 U	1	0.5	5.0 U	5.0	2.3	0.5 U	1	0.5	0.5 U	1	0.5	0.5 U	1	0.5	5.0 U	5.0	2.3
4-Nitroaniline	---	0.5 U	1	0.5	5.0 U	5.0	2.2	0.5 U	1	0.5	0.5 U	1	0.5	0.5 U	1	0.5	5.0 U	5.0	2.2
Nitrobenzene	---	0.5 U	1	0.5	1.0 U	1.0	0.58	0.5 U	1	0.5	0.5 U	1	0.5	0.5 U	1	0.5	1.0 U	1.0	0.58
2-Nitrophenol	---	0.5 U	1	0.5	5.0 U	5.0	2.0	0.5 U	1	0.5	0.5 U	1	0.5	0.5 U	1	0.5	5.0 U	5.0	2.0
4-Nitrophenol	---	10 U	29	10	5.0 U	5.0	2.6	10 U	29	10	11 U	33	11	11 U	32	11	5.0 U	5.0	2.6
N-Nitroso-Di-N-Propylamine	---	0.5 U	1	0.5	1.0 U	1.0	0.56	0.5 U	1	0.5	0.5 U	1	0.5	0.5 U	1	0.5	1.0 U	1.0	0.56
N-Nitrosodiphenylamine	1.96	0.5 U	1	0.5	1.0 U	1.0	0.46	0.5 U	1	0.5	0.5 U	1	0.5	0.5 U	1	0.5	1.0 U	1.0	0.46
Di-n-Octyl phthalate	---	2 U	5	2	1.0 U	1.0	0.51	2 U	5	2	2 U	5	2	2 U	5	2	1.0 U	1.0	0.51
Pentachlorophenol	---	1 UJ	5	1	5.0 U	5.0	2.4	1 U	5	1	1 U	5	1	1 U	5	1	5.0 U	5.0	2.4
Phenanthrene	---	0.1 U	0.5	0.1	1.0 U	1.0	0.56	0.1 U	0.5	0.1	0.1 U	0.5	0.1	0.1 U	0.5	0.1	**4.2**	1.0	0.56
Phenol	41,000	0.5 U	1	0.5	1.0 U	1.0	0.52	0.5 U	1	0.5	0.5 U	1	0.5	0.5 U	1	0.5	1.0 U	1.0	0.52
Pyrene	9.8	0.1 U	0.5	0.1	1.0 U	1.0	0.55	0.1 U	0.5	0.1	0.1 U	0.5	0.1	0.1 U	0.5	0.1	1.0 U	1.0	0.55
1,2,4-Trichlorobenzene	1.13	0.5 U	1	0.5	1.0 U	1.0	0.38	0.5 U	1	0.5	0.5 U	1	0.5	0.5 U	1	0.5	1.0 U	1.0	0.38
2,4,5-Trichlorophenol	---	0.5 U	1	0.5	5.0 U	5.0	2.2	0.5 U	1	0.5	0.5 U	1	0.5	0.5 U	1	0.5	5.0 U	5.0	2.2
2,4,6-Trichlorophenol	---	0.5 U	1	0.5	5.0 U	5.0	2.4	0.5 U	1	0.5	0.5 U	1	0.5	0.5 U	1	0.5	5.0 U	5.0	2.4
cPAHs (µg/L)																			
Method SW8270D-SIM																			
Benzo(a)anthracene	0.0018	0.0048 U	0.0095	0.0048	0.010 U	0.010	0.0063	0.0048 U	0.0095	0.0048	0.0054 U	0.011	0.0054	0.0051 U	0.010	0.0051	0.010 U	0.010	0.0063
Benzo(a)pyrene	0.00018	0.0048 U	0.0095	0.0048	0.010 U	0.010	0.0048	0.0048 U	0.0095	0.0048	0.0054 U	0.011	0.0054	0.0051 U	0.010	0.0051	0.010 U	0.010	0.0048
Benzo(b)fluoranthene	0.0018	0.0048 U	0.0095	0.0048	NA	NA	NA	0.0048 U	0.0095	0.0048	0.0054 U	0.011	0.0054	0.0051 U	0.010	0.0051	NA	NA	NA
Benzo(k)fluoranthene	0.0018	0.0048 U	0.0095	0.0048	NA	NA	NA	0.0048 U	0.0095	0.0048	0.0054 U	0.011	0.0054	0.0051 U	0.010	0.0051	NA	NA	NA
Total Benzofluoranthenes	0.0018	NA	NA	NA	0.020 UJ	0.020	0.0099	NA	NA	NA	NA	NA	NA	NA	NA	NA	0.020 UJ	0.020	0.0099
Chrysene	0.018	0.0048 U	0.0095	0.0048	0.010 U	0.010	0.0046	0.0048 U	0.0095	0.0048	0.0054 U	0.011	0.0054	0.0051 U	0.010	0.0051	0.010 U	0.010	0.0046
Dibenz(a,h)anthracene	0.0018	0.0038 U	0.0095	0.0038	0.010 U	0.010	0.0048	0.0038 U	0.0095	0.0038	0.0044 U	0.011	0.0044	0.0041 U	0.010	0.0041	0.010 U	0.010	0.0048
Indeno(1,2,3-cd)pyrene	0.0018	0.0038 U	0.0095	0.0038	0.010 U	0.010	0.0046	0.0038 U	0.0095	0.0038	0.0044 U	0.011	0.0044	0.0041 U	0.010	0.0041	0.010 U	0.010	0.0046
Pyrene	9.8	0.0095 U	0.048	0.0095	NA	NA	NA	0.0095 U	0.048	0.0095	0.011 U	0.054	0.011	0.010 U	0.051	0.010	NA	NA	NA
cPAH TEQ	0.00018	ND	NA	NA	ND	NA	NA	ND	NA	NA	ND	NA	NA	ND	NA	NA	ND	NA	NA
PCBs (µg/L)																			
Method SW8082																			
Aroclor 1016	0.000023	0.0057 U	0.0096	0.0057	0.010 U	0.010	0.0025	0.0057 U	0.0095	0.0057	0.0064 U	0.011	0.0064	0.0060 U	0.0100	0.0060	0.010 U	0.010	0.0025
Aroclor 1221	---	0.0057 U	0.0096	0.0057	0.010 U	0.010	0.0028	0.0057 U	0.0095	0.0057	0.0064 U	0.011	0.0064	0.0060 U	0.0100	0.0060	0.010 U	0.010	0.0028
Aroclor 1232	---	0.0067 U	0.0096	0.0067	0.010 U	0.010	0.0028	0.0066 U	0.0095	0.0066	0.0074 U	0.011	0.0074	0.0070 U	0.0100	0.0070	0.010 U	0.010	0.0028
Aroclor 1242	0.000023	0.0057 U	0.0096	0.0057	0.010 U	0.010	0.0028	0.0057 U	0.0095	0.0057	0.0064 U	0.011	0.0064	0.0060 U	0.0100	0.0060	0.010 U	0.010	0.0028
Aroclor 1248	0.000023	0.0048 U	0.0096	0.0048	0.010 U	0.010	0.0028	0.0047 U	0.0095	0.0047	0.0053 U	0.011	0.0053	0.0050 U	0.0100	0.0050	0.010 U	0.010	0.0028
Aroclor 1254	0.0000055	0.0048 U	0.0096	0.0048	0.010 U	0.010	0.0028	0.0047 U	0.0095	0.0047	0.0053 U	0.011	0.0053	0.0050 U	0.0100	0.0050	0.010 U	0.010	0.0028
Aroclor 1260	0.000023	0.0048 U	0.0096	0.0048	0.010 U	0.010	0.0028	0.0047 U	0.0095	0.0047	0.0053 U	0.011	0.0053	0.0050 U	0.0100	0.0050	0.010 U	0.010	0.0028
Total PCBs	0.000023	ND	NA	NA	ND	NA	NA	ND	NA	NA	ND	NA	NA	ND	NA	NA	ND	NA	NA

TABLE L-1
GROUNDWATER ANALYTICAL RESULTS
BOEING ISAACSON-THOMPSON
REMEDIAL INVESTIGATION

Location:		IT-I-205			IT-I-206			IT-I-206			IT-I-206			IT-I-206			IT-MW-1		
Laboratory Sample ID:	Preliminary	6789062/6789063/6789064/VJ53F			UA27D/UA27L/UA28D/UA28K/UB45D/UB45K			6577003/6577004/UM00B			6693953/6693954/6693955/UZ37D			6790518/6790519/6790520/VJ63G			UA27B/UA27J/UA28B/UA28I/UB45B/UB45I		
Laboratory Data Package ID:	Cleanup	1335688/VJ53			UA27/UA28/UB45			1295065/UM00			1317022/UZ37			1335985/VJ63			UA27/UA28/UB45		
Sample Date:	Levels	9/13/2012			12/06/2011			03/12/2012			6/19/2012			9/14/2012			12/06/2011		
		Result	Reporting Limit	Detection Limit	Result	Reporting Limit	Detection Limit	Result	Reporting Limit	Detection Limit	Result	Reporting Limit	Detection Limit	Result	Reporting Limit	Detection Limit	Result	Reporting Limit	Detection Limit
TOTAL PETROLEUM HYDROCARBONS (mg/L)																			
NWTPH-Dx																			
Diesel-Range Organics	0.5	0.028 U	0.095	0.028	0.10 U	0.10	0.022	0.075 U	0.27	0.075	0.031 U	0.100	0.031	0.033 U	0.110	0.033	0.10 U	0.10	0.022
Oil-Range Organics	0.5	0.066 U	0.240	0.066	0.20 U	0.20	0.044	1.1 U	3.2	1.1	0.072 U	0.260	0.072	0.078 U	0.280	0.078	0.20 U	0.20	0.044
NWTPH-G																			
Gasoline-Range Organics	1.0/0.8	0.05 U	0.25	0.05	0.25 U	0.25	0.06	0.05 U	0.25	0.05	0.05 U	0.25	0.05	0.05 U	0.25	0.05	0.25 U	0.25	0.06
TOTAL METALS (µg/L)																			
Method 200.8																			
Antimony	---	0.33 U	1.0	0.33	0.2 U	0.2	0.010	0.42 U	1.0	0.42	0.33 U	1.0	0.33	0.33 U	1.0	0.33	0.2 U	0.2	0.010
Arsenic	---	**132**	2.0	0.40	**398**	0.5	0.120	**207**	2.0	0.95	**461**	2.0	0.20	**453**	2.0	0.40	**10.8**	0.2	0.048
Barium	---	**4.2**	2.0	0.41	**22.8**	0.5	0.020	**22.1**	2.0	0.69	**24.7**	2.0	0.41	**23.1**	2.0	0.41	**35.6**	0.5	0.020
Beryllium	---	0.025 U	0.50	0.025	0.2 U	0.2	0.021	0.13 U	0.50	0.13	0.025 U	0.50	0.025	**0.035** J1	0.50	0.025	0.2 U	0.2	0.021
Cadmium	---	0.082 U	0.50	0.082	0.1 U	0.1	0.010	0.20 U	0.50	0.20	0.048 U	0.50	0.048	0.082 U	0.50	0.082	0.1 U	0.1	0.010
Chromium	---	0.50 U	2.0	0.50	**1.1**	0.5	0.045	**0.97** J1	2.0	0.60	**1.5** J1	2.0	0.50	**1.4** J1	2.0	0.50	**1.7**	0.5	0.045
Copper	---	0.40 U	2.0	0.40	**0.6**	0.5	0.158	**1.1** J1	2.0	0.38	0.15 U	2.0	0.15	0.40 U	2.0	0.40	**1.0**	0.5	0.158
Lead	---	**0.048** J1	1.0	0.034	0.1 U	0.1	0.046	**0.31** J1	1.0	0.080	0.034 U	1.0	0.034	**0.37** J1	1.0	0.034	0.1 U	0.1	0.046
Nickel	---	0.35 U	2.0	0.35	**1.4**	0.5	0.079	**0.55** J1	2.0	0.50	**0.30** J1	2.0	0.13	**0.42** J1	2.0	0.35	**2.4**	0.5	0.079
Selenium	---	0.50 U	2.0	0.50	**0.8**	0.5	0.127	0.27 U	2.0	0.27	**0.24** J1	2.0	0.18	0.50 U	2.0	0.50	**0.7**	0.5	0.127
Silver	---	0.10 U	0.50	0.10	0.2 U	0.2	0.008	0.098 U	0.50	0.098	0.10 U	0.50	0.10	0.10 U	0.50	0.10	0.2 U	0.2	0.008
Thallium	---	0.15 U	0.50	0.15	0.2 U	0.2	0.004	0.15 U	0.50	0.15	0.029 U	0.50	0.029	0.15 U	0.50	0.15	0.2 U	0.2	0.004
Zinc	---	1.1 U	15.0	1.1	4 U	4	0.50	**20.1**	15.0	4.0	1.1 U	15.0	1.1	1.1 U	15.0	1.1	**4**	4	0.50
Method SW7196A (mg/L)																			
Chromium VI	0.00058	0.010 U	0.010	0.00300	0.010 U	0.010	0.00300	0.010 U	0.010	0.00300	0.010 U	0.010	0.00300	0.010 U	0.010	0.00300	0.010 U	0.010	0.00300
Method SW7470A/EPA 1631E (ng/L)																			
Mercury	12	**0.375** J1	0.500	0.160	20.0 U	20.0	2.60	**3.38** J1	5.00	1.60	1.60 U	5.00	1.60	**2.61** J1	5.00	1.60	20.0 U	20.0	2.60
DISSOLVED METALS (µg/L)																			
Methods 200.8/SW7196A																			
Antimony	150	0.33 U	1.0	0.33	0.2 U	0.2	0.010	0.42 U	1.0	0.42	0.33 U	1.0	0.33	0.33 U	1.0	0.33	0.2 U	0.2	0.010
Arsenic	8	**121**	2.0	0.40	**401**	0.5	0.120	**190**	2.0	0.95	**464**	2.0	0.20	**445**	2.0	0.40	**10.9**	0.2	0.048
Barium	770	**4.6**	2.0	0.41	**21.4**	0.5	0.020	**16.0**	2.0	0.69	**23.3**	2.0	0.41	**26.6**	2.0	0.41	**33.6**	0.5	0.020
Beryllium	12	0.025 U	0.50	0.025	0.2 U	0.2	0.021	0.13 U	0.50	0.13	0.025 U	0.50	0.025	**0.027** J1	0.50	0.025	0.2 U	0.2	0.021
Cadmium	0.25	0.082 U	0.50	0.082	0.1 U	0.1	0.010	0.20 U	0.50	0.20	0.048 U	0.50	0.048	0.082 U	0.50	0.082	0.1 U	0.1	0.010
Chromium	74	0.50 U	2.0	0.50	**0.9**	0.5	0.045	**0.79** J1	2.0	0.60	**1.4** J1	2.0	0.50	**1.1** J1	2.0	0.50	**1.5**	0.5	0.045
Copper	8	0.40 U	2.0	0.40	0.5 U	0.5	0.158	0.38 U	2.0	0.38	0.15 U	2.0	0.15	0.40 U	2.0	0.40	0.5 U	0.5	0.158
Lead	2.5	0.034 U	1.0	0.034	0.1 U	0.1	0.046	0.080 U	1.0	0.080	0.034 U	1.0	0.034	0.034 U	1.0	0.034	0.1 U	0.1	0.046
Nickel	8.2	0.35 U	2.0	0.35	**0.9**	0.5	0.079	**0.75** J1	2.0	0.50	**0.27** J1	2.0	0.13	**0.42** J1	2.0	0.35	**2.4**	0.5	0.079
Selenium	5	0.50 U	2.0	0.50	**0.8**	0.5	0.127	0.27 U	2.0	0.27	0.18 U	2.0	0.18	0.50 U	2.0	0.50	**0.6**	0.5	0.127
Silver	22	0.10 U	0.50	0.10	0.2 U	0.2	0.008	0.098 U	0.50	0.098	0.10 U	0.50	0.10	0.10 U	0.50	0.10	0.2 U	0.2	0.008
Thallium	0.47	0.15 U	0.50	0.15	0.2 U	0.2	0.004	0.15 U	0.50	0.15	0.029 U	0.50	0.029	0.15 U	0.50	0.15	0.2 U	0.2	0.004
Zinc	56	1.1 U	15.0	1.1	4 U	4	0.50	**24.4**	15.0	4.0	1.1 U	15.0	1.1	**1.5** J1	15.0	1.1	4 U	4	0.50
Method SW7470A/EPA 1631E (ng/L)																			
Mercury	12	**3.38** J1	10.0	3.20	20.0 U	20.0	2.60	**3.25** J1	5.00	1.60	1.60 U	5.00	1.60	**4.52** J1	5.00	1.60	20.0 U	20.0	2.60
CONVENTIONALS (mg/L)																			
Chloride (Method 300.0)	---	**7.2**	2.0	1.0	NA	NA	NA	NA	NA	NA	**38.6**	4.0	2.0	**29.5**	4.0	2.0	NA	NA	NA
Nitrate (Method 300.0)	---	0.050 U	0.10	0.050	0.1 U	0.1	0.007	0.050 UJ	0.10	0.050	0.25 U	0.50	0.25	0.050 U	0.10	0.050	0.1 U	0.1	0.007
Sulfate (Method 300.0)	---	0.30 U	1.0	0.30	**22.1**	0.5	0.295	**11.2**	5.0	1.5	**6.0**	5.0	1.5	**27.8**	10.0	3.0	0.1 U	0.1	0.059
Total Dissolved Solids (Method 160.1)	---	**183**	30.0	9.7	**508**	10.0	10.0	**488**	60.0	19.4	**499** J	60.0	19.4	**560**	60.0	19.4	**450**	10.0	10.0
FIELD PARAMETERS																			
Temperature (°C)	---	16.84	NA	NA	15.63	NA	NA	14.85	NA	NA	15.55	NA	NA	16.64	NA	NA	16.93	NA	NA
Conductivity (uS/cm)	---	509	NA	NA	1006	NA	NA	711	NA	NA	787	NA	NA	684	NA	NA	722	NA	NA
Dissolved Oxygen (mg/L)	---	1.36	NA	NA	0.52	NA	NA	1.18	NA	NA	0.45	NA	NA	0.53	NA	NA	1.39	NA	NA
pH (SU)	---	5.76	NA	NA	6.11	NA	NA	7.36	NA	NA	6.92	NA	NA	7.42	NA	NA	6.80	NA	NA
ORP (mV)	---	-65	NA	NA	-125.7	NA	NA	-115.6	NA	NA	-146.9	NA	NA	-127.8	NA	NA	-71.8	NA	NA
Turbidity (NTU)	---	87.3	NA	NA	2.45	NA	NA	41.18	NA	NA	5.56	NA	NA	3.64	NA	NA	2.91	NA	NA
Ferrous Iron (mg/L)	---	2.6	NA	NA	NA	NA	NA	1.6	NA	NA	0.6	NA	NA	2.2	NA	NA	NA	NA	NA

TABLE L-1
GROUNDWATER ANALYTICAL RESULTS
BOEING ISAACSON-THOMPSON
REMEDIAL INVESTIGATION

Location:		IT-MW-1			IT-MW-1			IT-MW-1			IT-MW-2			IT-MW-2			IT-MW-2		
Laboratory Sample ID:	Preliminary	6574126/6574127/UL60B			6697958/6697959/6697960/UZ66A			6790506/6790507/6790508/VJ63C			UA27A/UA27I/UA28A/UA28H/UB45A/UB45H			6574128/6574129/UL60C			6697967/6697968/6697969/UZ66D		
Laboratory Data Package ID:	Cleanup	1294477/UL60			1317686/UZ66			1335985/VJ63			UA27/UA28/UB45			1294477/UL60			1317686/UZ66		
Sample Date:	Levels	03/09/2012			6/21/2012			9/14/2012			12/06/2011			03/09/2012			6/21/2012		
		Result	Reporting Limit	Detection Limit	Result	Reporting Limit	Detection Limit	Result	Reporting Limit	Detection Limit	Result	Reporting Limit	Detection Limit	Result	Reporting Limit	Detection Limit	Result	Reporting Limit	Detection Limit
VOLATILES (µg/L)																			
Method SW8260C																			
Acetone	110,000	3.0 U	5.0	3.0	3.0 U	5.0	3.0	3.0 U	5.0	3.0	2.0 UJ2	5.0	0.72	3.0 U	5.0	3.0	15 U	25	15
Acrolein	---	5.0 U	25	5.0	5.0 U	25	5.0	5.0 U	25	5.0	5.0 UJ	5.0	0.29	5.0 U	25	5.0	25 U	130	25
Acrylonitrile	0.057	1.0 U	5.0	1.0	1.0 U	5.0	1.0	1.0 U	5.0	1.0	1.0 U	1.0	0.18	1.0 U	5.0	1.0	5.0 U	25	5.0
Benzene	2	0.1 U	0.2	0.1	0.1 U	0.2	0.1	0.1 U	0.2	0.1	0.2 U	0.2	0.06	0.1 U	0.2	0.1	0.5 U	1.0	0.5
Bromobenzene	---	0.1 U	0.5	0.1	0.1 U	0.5	0.1	0.1 U	0.5	0.1	0.2 U	0.2	0.05	0.1 U	0.5	0.1	0.5 U	2.5	0.5
Bromochloromethane	---	0.1 U	0.5	0.1	0.1 U	0.5	0.1	0.1 U	0.5	0.1	0.2 U	0.2	0.07	0.1 U	0.5	0.1	0.5 U	2.5	0.5
Bromodichloromethane	17	0.1 U	0.5	0.1	0.1 U	0.5	0.1	0.1 U	0.5	0.1	0.2 U	0.2	0.05	0.1 U	0.5	0.1	0.5 U	2.5	0.5
Bromoform	---	0.1 U	0.5	0.1	0.1 UJ	0.5	0.1	0.1 U	0.5	0.1	0.2 U	0.2	0.07	0.1 U	0.5	0.1	0.5 UJ	2.5	0.5
Bromomethane	---	0.1 U	0.5	0.1	0.1 U	0.5	0.1	0.1 U	0.5	0.1	1.0 U	1.0	0.04	0.1 U	0.5	0.1	0.5 U	2.5	0.5
2-Butanone	73,000	1.0 U	5.0	1.0	1.0 U	5.0	1.0	1.0 U	5.0	1.0	5.0 U	5.0	0.81	1.0 U	5.0	1.0	5.0 U	25	5.0
n-Butylbenzene	780	0.1 U	0.5	0.1	0.1 U	0.5	0.1	0.1 U	0.5	0.1	0.2 U	0.2	0.11	0.1 U	0.5	0.1	0.5 U	2.5	0.5
sec-Butylbenzene	---	0.1 U	0.5	0.1	0.1 U	0.5	0.1	0.1 U	0.5	0.1	0.2 U	0.2	0.08	0.1 U	0.5	0.1	0.5 U	2.5	0.5
tert-Butylbenzene	---	0.1 U	0.5	0.1	0.1 U	0.5	0.1	0.1 U	0.5	0.1	0.2 U	0.2	0.06	0.1 U	0.5	0.1	0.5 U	2.5	0.5
Carbon Disulfide	3900	0.4 U	0.5	0.4	0.4 U	0.5	0.4	0.4 U	0.5	0.4	0.2 U	0.2	0.09	0.4 U	0.5	0.4	2.0 U	2.5	2.0
Carbon Tetrachloride	0.46	0.1 U	0.2	0.1	0.1 U	0.2	0.1	0.1 U	0.2	0.1	0.2 U	0.2	0.08	0.1 U	0.2	0.1	0.5 U	1.0	0.5
Chlorobenzene	270	0.1 U	0.5	0.1	0.1 U	0.5	0.1	0.1 U	0.5	0.1	0.2 U	0.2	0.04	0.1 U	0.5	0.1	0.5 U	2.5	0.5
Chloroethane	21,000	0.1 U	0.5	0.1	0.1 U	0.5	0.1	0.1 U	0.5	0.1	0.2 U	0.2	0.15	0.1 U	0.5	0.1	0.5 U	2.5	0.5
Chloroform	9.4	0.1 U	0.2	0.1	0.1 U	0.2	0.1	0.1 U	0.2	0.1	0.2 U	0.2	0.08	0.1 U	0.2	0.1	0.5 U	1.0	0.5
Chloromethane	10.3	0.2 U	0.5	0.2	0.2 U	0.5	0.2	0.2 U	0.5	0.2	0.5 U	0.5	0.10	0.2 U	0.5	0.2	1.0 U	2.5	1.0
2-Chlorotoluene	---	0.1 U	0.5	0.1	0.1 U	0.5	0.1	0.1 U	0.5	0.1	0.2 U	0.2	0.04	0.1 U	0.5	0.1	0.5 U	2.5	0.5
4-Chlorotoluene	2600	0.1 U	0.5	0.1	0.1 U	0.5	0.1	0.1 U	0.5	0.1	0.2 U	0.2	0.07	0.1 U	0.5	0.1	0.5 U	2.5	0.5
1,2-Dibromo-3-chloropropane	---	0.2 U	0.5	0.2	0.2 U	0.5	0.2	0.2 U	0.5	0.2	0.5 UJ	0.5	0.21	0.2 U	0.5	0.2	1.0 U	2.5	1.0
Dibromochloromethane	---	0.1 U	0.5	0.1	0.1 U	0.5	0.1	0.1 U	0.5	0.1	0.2 U	0.2	0.09	0.1 U	0.5	0.1	0.5 U	2.5	0.5
Dibromomethane	---	0.1 U	0.5	0.1	0.1 U	0.5	0.1	0.1 U	0.5	0.1	0.2 U	0.2	0.08	0.1 U	0.5	0.1	0.5 U	2.5	0.5
trans-1,4-Dichloro-2-butene	---	1.0 U	5.0	1.0	1.0 UJ	5.0	1.0	1.0 U	5.0	1.0	1.0 UJ	1.0	0.24	1.0 U	5.0	1.0	5.0 UJ	25	5.0
1,2-Dichlorobenzene	440	0.1 U	0.5	0.1	0.1 U	0.5	0.1	0.1 U	0.5	0.1	0.2 U	0.2	0.06	0.1 U	0.5	0.1	0.5 U	2.5	0.5
1,3-Dichlorobenzene	960	0.1 U	0.5	0.1	0.1 U	0.5	0.1	0.1 U	0.5	0.1	0.2 U	0.2	0.04	0.1 U	0.5	0.1	0.5 U	2.5	0.5
1,4-Dichlorobenzene	1.7	0.1 U	0.5	0.1	0.1 U	0.5	0.1	0.1 U	0.5	0.1	0.2 U	0.2	0.06	0.1 U	0.5	0.1	0.5 U	2.5	0.5
1,1-Dichloroethane	33	0.1 U	0.5	0.1	0.1 U	0.5	0.1	0.1 U	0.5	0.1	0.2 U	0.2	0.05	0.1 U	0.5	0.1	**0.5** J1	2.5	0.5
1,2-Dichloroethane	3.6	0.1 U	0.2	0.1	0.1 U	0.2	0.1	0.1 U	0.2	0.1	0.2 U	0.2	0.08	0.1 U	0.2	0.1	0.5 U	1.0	0.5
1,1-Dichloroethene	3.2	0.1 U	0.2	0.1	0.1 U	0.2	0.1	0.1 U	0.2	0.1	0.2 U	0.2	0.09	0.1 U	0.2	0.1	0.5 U	1.0	0.5
cis-1,2-Dichloroethene	130	**0.3**	0.2	0.1	**0.2** J1	0.2	0.1	**0.2**	0.2	0.1	0.2 U	0.2	0.10	0.1 U	0.2	0.1	0.5 U	1.0	0.5
trans-1,2-Dichloroethene	940	0.1 U	0.2	0.1	0.1 U	0.2	0.1	0.1 U	0.2	0.1	0.2 U	0.2	0.08	0.1 U	0.2	0.1	0.5 U	1.0	0.5
1,2-Dichloropropane	3.7	0.1 U	0.5	0.1	0.1 U	0.5	0.1	0.1 U	0.5	0.1	0.2 U	0.2	0.09	0.1 U	0.5	0.1	0.5 U	2.5	0.5
1,3-Dichloropropane	---	0.1 U	0.5	0.1	0.1 U	0.5	0.1	0.1 U	0.5	0.1	0.2 U	0.2	0.02	0.1 U	0.5	0.1	0.5 U	2.5	0.5
2,2-Dichloropropane	---	0.1 U	0.5	0.1	0.1 U	0.5	0.1	0.1 U	0.5	0.1	0.2 U	0.2	0.08	0.1 U	0.5	0.1	0.5 U	2.5	0.5
1,1-Dichloropropene	---	0.1 U	0.5	0.1	0.1 U	0.5	0.1	0.1 U	0.5	0.1	0.2 U	0.2	0.09	0.1 U	0.5	0.1	0.5 U	2.5	0.5
cis-1,3-Dichloropropene	---	0.1 U	0.2	0.1	0.1 U	0.2	0.1	0.1 U	0.2	0.1	0.2 U	0.2	0.06	0.1 U	0.2	0.1	0.5 U	1.0	0.5
trans-1,3-Dichloropropene	---	0.1 U	0.2	0.1	0.1 U	0.2	0.1	0.1 U	0.2	0.1	0.2 U	0.2	0.06	0.1 U	0.2	0.1	0.5 U	1.0	0.5
Ethylbenzene	1.7	0.1 U	0.5	0.1	0.1 U	0.5	0.1	0.1 U	0.5	0.1	0.2 U	0.2	0.09	0.1 U	0.5	0.1	0.5 U	2.5	0.5
Ethylene Dibromide	---	0.1 U	0.5	0.1	0.1 U	0.5	0.1	0.1 U	0.5	0.1	0.2 U	0.2	0.08	0.1 U	0.5	0.1	0.5 U	2.5	0.5
Hexachlorobutadiene	---	0.1 U	0.5	0.1	0.1 U	0.5	0.1	0.1 U	0.5	0.1	0.5 U	0.5	0.11	0.1 U	0.5	0.1	0.5 U	2.5	0.5
2-Hexanone	3200	1.0 U	5.0	1.0	1.0 U	5.0	1.0	1.0 U	5.0	1.0	5.0 U	5.0	0.31	1.0 U	5.0	1.0	5.0 U	25	5.0
Isopropylbenzene	270	0.1 U	0.5	0.1	0.1 U	0.5	0.1	0.1 U	0.5	0.1	0.2 U	0.2	0.06	0.1 U	0.5	0.1	0.5 U	2.5	0.5
4-Isopropyltoluene	---	0.1 U	0.5	0.1	0.1 U	0.5	0.1	0.1 U	0.5	0.1	0.2 U	0.2	0.08	0.1 U	0.5	0.1	0.5 U	2.5	0.5
Methyl Iodide	---	0.1 U	0.5	0.1	0.1 U	0.5	0.1	0.1 U	0.5	0.1	1.0 U	1.0	0.04	0.1 U	0.5	0.1	0.5 U	2.5	0.5
4-Methyl-2-Pentanone (MIBK)	19,000	1.0 U	5.0	1.0	1.0 U	5.0	1.0	1.0 U	5.0	1.0	5.0 U	5.0	0.38	1.0 U	5.0	1.0	5.0 U	25	5.0
Methylene Chloride	230	0.2 U	0.5	0.2	0.2 U	0.5	0.2	0.2 U	0.5	0.2	0.5 U	0.5	0.39	0.2 U	0.5	0.2	1.0 U	2.5	1.0
Naphthalene	26	0.1 U	0.5	0.1	0.1 U	0.5	0.1	0.1 U	0.5	0.1	0.5 U	0.5	0.07	0.1 U	0.5	0.1	**13**	2.5	0.5
n-Propylbenzene	530	0.1 U	0.5	0.1	0.1 U	0.5	0.1	0.1 U	0.5	0.1	0.2 U	0.2	0.08	0.1 U	0.5	0.1	0.5 U	2.5	0.5
Styrene	77,000	0.1 U	0.5	0.1	0.1 U	0.5	0.1	0.1 U	0.5	0.1	0.2 U	0.2	0.07	0.1 U	0.5	0.1	0.5 U	2.5	0.5
1,1,1,2-Tetrachloroethane	---	0.1 U	0.5	0.1	0.1 U	0.5	0.1	0.1 U	0.5	0.1	0.2 U	0.2	0.07	0.1 U	0.5	0.1	0.5 U	2.5	0.5
1,1,2,2-Tetrachloroethane	0.33	0.1 U	0.2	0.1	0.1 U	0.2	0.1	0.1 U	0.2	0.1	0.2 U	0.2	0.07	0.1 U	0.2	0.1	0.5 U	1.0	0.5
Tetrachloroethene	3.3	0.1 U	0.2	0.1	0.1 U	0.2	0.1	0.1 U	0.2	0.1	0.2 U	0.2	0.09	0.1 U	0.2	0.1	0.5 U	1.0	0.5
Toluene	1300	0.1 U	0.2	0.1	0.1 U	0.2	0.1	0.1 U	0.2	0.1	**0.1** J1	0.2	0.06	0.1 U	0.2	0.1	0.5 U	1.0	0.5
1,1,2-Trichloro-1,2,2-trifuoroethane	59,000	0.2 U	0.5	0.2	0.2 U	0.5	0.2	0.2 U	0.5	0.2	0.2 U	0.2	0.11	0.2 U	0.5	0.2	1.0 U	2.5	1.0
1,2,3-Trichlorobenzene	---	0.1 U	0.5	0.1	0.1 U	0.5	0.1	0.1 U	0.5	0.1	0.5 U	0.5	0.09	0.1 U	0.5	0.1	0.5 U	2.5	0.5

TABLE L-1
GROUNDWATER ANALYTICAL RESULTS
BOEING ISAACSON-THOMPSON
REMEDIAL INVESTIGATION

Location:		IT-MW-1			IT-MW-1			IT-MW-1			IT-MW-2			IT-MW-2			IT-MW-2		
Laboratory Sample ID:	Preliminary	6574126/6574127/UL60B			6697958/6697959/6697960/UZ66A			6790506/6790507/6790508/VJ63C			UA27A/UA27I/UA28A/UA28H/UB45A/UB45H			6574128/6574129/UL60C			6697967/6697968/6697969/UZ66D		
Laboratory Data Package ID:	Cleanup	1294477/UL60			1317686/UZ66			1335985/VJ63			UA27/UA28/UB45			1294477/UL60			1317686/UZ66		
Sample Date:	Levels	03/09/2012			6/21/2012			9/14/2012			12/06/2011			03/09/2012			6/21/2012		
		Result	Reporting Limit	Detection Limit	Result	Reporting Limit	Detection Limit	Result	Reporting Limit	Detection Limit	Result	Reporting Limit	Detection Limit	Result	Reporting Limit	Detection Limit	Result	Reporting Limit	Detection Limit
1,2,4-Trichlorobenzene	1.13	0.1 U	0.5	0.1	0.1 U	0.5	0.1	0.1 U	0.5	0.1	0.5 U	0.5	0.10	0.1 U	0.5	0.1	0.5 U	2.5	0.5
1,1,1-Trichloroethane	46,000	0.1 U	0.5	0.1	0.1 U	0.5	0.1	0.1 U	0.5	0.1	0.2 U	0.2	0.09	0.1 U	0.5	0.1	0.5 U	2.5	0.5
1,1,2-Trichloroethane	2.3	0.1 U	0.2	0.1	0.1 U	0.2	0.1	0.1 U	0.2	0.1	0.2 U	0.2	0.04	0.1 U	0.2	0.1	0.5 U	1.0	0.5
Trichloroethene	1.4	0.1 U	0.2	0.1	0.1 U	0.2	0.1	0.1 U	0.2	0.1	0.2 U	0.2	0.08	0.1 U	0.2	0.1	0.5 U	1.0	0.5
Trichlorofluoromethane	6900	0.1 U	0.5	0.1	0.1 U	0.5	0.1	0.1 U	0.5	0.1	0.2 U	0.2	0.09	0.1 U	0.5	0.1	0.5 U	2.5	0.5
1,2,3-Trichloropropane	---	0.3 U	1.0	0.3	0.3 U	1.0	0.3	0.3 U	1.0	0.3	0.5 U	0.5	0.23	0.3 U	1.0	0.3	1.5 U	5.0	1.5
1,2,4-Trimethylbenzene	303	0.1 U	0.5	0.1	0.1 U	0.5	0.1	0.1 U	0.5	0.1	0.2 U	0.2	0.06	0.1 U	0.5	0.1	**0.5** J1	2.5	0.5
1,3,5-Trimethylbenzene	303	0.1 U	0.5	0.1	0.1 U	0.5	0.1	0.1 U	0.5	0.1	0.2 U	0.2	0.06	0.1 U	0.5	0.1	0.5 U	2.5	0.5
Vinyl Acetate	---	0.2 U	0.5	0.2	0.2 U	0.5	0.2	0.2 U	0.5	0.2	1.0 U	1.0	0.07	0.2 U	0.5	0.2	1.0 U	2.5	1.0
Vinyl Chloride	0.53	**0.3**	0.2	0.1	**0.3**	0.2	0.1	**0.2**	0.2	0.1	**0.3**	0.2	0.08	**0.4**	0.2	0.1	**0.7** J1	1.0	0.5
m,p-Xylene	1300	0.1 U	0.5	0.1	0.1 U	0.5	0.1	0.1 U	0.5	0.1	0.4 U	0.4	0.14	0.1 U	0.5	0.1	0.5 U	2.5	0.5
o-Xylene	1600	**0.1** J1	0.5	0.1	0.1 U	0.5	0.1	**0.1** J1	0.5	0.1	0.2 U	0.2	0.06	0.1 U	0.5	0.1	0.5 U	2.5	0.5
2-Chloroethylvinylether	---	NA	NA	NA	NA	NA	NA	NA	NA	NA	1.0 U	1.0	0.09	NA	NA	NA	NA	NA	NA
Bromoethane	---	NA	NA	NA	NA	NA	NA	NA	NA	NA	0.2 U	0.2	0.09	NA	NA	NA	NA	NA	NA
VOLATILES (µg/L)																			
Method SW8260C-SIM																			
Tetrachloroethene	3.3	0.010 U	0.020	0.010	0.010 U	0.020	0.010	0.010 U	0.020	0.010	0.020 U	0.020	0.0036	0.010 U	0.020	0.010	0.010 U	0.020	0.010
Vinyl Chloride	0.53	**0.25**	0.020	0.010	**0.33**	0.020	0.010	**0.21**	0.020	0.010	**0.30**	0.020	0.0022	**0.39**	0.020	0.010	**0.81**	0.020	0.010
Acrylonitrile	0.057	NA	NA	NA	NA	NA	NA	NA	NA	NA	0.050 U	0.050	0.0158	NA	NA	NA	NA	NA	NA
SEMIVOLATILES (µg/L)																			
Method SW8270D																			
Acenaphthene	120	**8**	0.5	0.1	**8**	0.5	0.1	**7**	0.5	0.09	**0.8** J1	1.0	0.55	**1**	0.5	0.1	**3**	0.5	0.1
Acenaphthylene	---	0.1 U	0.5	0.1	0.1 U	0.5	0.1	0.09 U	0.5	0.09	1.0 U	1.0	0.48	0.1 U	0.5	0.1	0.1 U	0.5	0.1
Anthracene	200	0.1 U	0.5	0.1	**0.2** J1	0.5	0.1	0.09 U	0.5	0.09	1.0 U	1.0	0.53	0.1 U	0.5	0.1	0.1 U	0.5	0.1
Benzo(a)anthracene	0.0018	0.1 U	0.5	0.1	0.1 U	0.5	0.1	0.09 U	0.5	0.09	1.0 U	1.0	0.52	0.1 U	0.5	0.1	0.1 U	0.5	0.1
Benzo(a)pyrene	0.00018	0.1 U	0.5	0.1	0.1 U	0.5	0.1	0.09 U	0.5	0.09	1.0 U	1.0	0.48	0.1 U	0.5	0.1	0.1 U	0.5	0.1
Benzo(b)fluoranthene	0.0018	0.1 U	0.5	0.1	0.1 U	0.5	0.1	0.09 U	0.5	0.09	NA	NA	NA	0.1 U	0.5	0.1	0.1 U	0.5	0.1
Benzo(g,h,i)perylene	---	0.1 U	0.5	0.1	0.1 U	0.5	0.1	0.09 U	0.5	0.09	1.0 U	1.0	0.55	0.1 U	0.5	0.1	0.1 U	0.5	0.1
Benzo(k)fluoranthene	0.0018	0.1 U	0.5	0.1	0.1 U	0.5	0.1	0.09 U	0.5	0.09	NA	NA	NA	0.1 U	0.5	0.1	0.1 U	0.5	0.1
Total Benzofluoranthenes	0.0018	NA	NA	NA	NA	NA	NA	NA	NA	NA	1.0 U	1.0	0.48	NA	NA	NA	NA	NA	NA
Benzoic Acid	2,240	6 R	15	6	6 U	14	6	6 U	14	6	10 UJ	10	5.1	6 R	14	6	6 U	15	6
Benzyl Alcohol	182	5 U	15	5	5 U	14	5	5 U	14	5	5.0 U	5.0	2.0	5 U	14	5	5 U	15	5
4-Bromophenyl-phenylether	---	0.5 U	1	0.5	0.5 U	1	0.5	0.5 U	0.9	0.5	1.0 U	1.0	0.42	0.5 U	1	0.5	0.5 U	1	0.5
Butylbenzylphthalate	0.41	2 U	5	2	2 U	5	2	2 U	5	2	1.0 U	1.0	0.56	2 U	5	2	2 U	5	2
Di-n-Butylphthalate	47	2 U	5	2	2 U	5	2	2 U	5	2	1.0 U	1.0	0.54	2 U	5	2	2 U	5	2
Carbazole	---	0.5 U	1	0.5	0.5 U	1	0.5	0.5 U	0.9	0.5	1.0 U	1.0	0.31	0.5 U	1	0.5	0.5 U	1	0.5
4-Chloro-3-methylphenol	3700	0.5 U	1	0.5	0.5 U	1	0.5	0.5 U	0.9	0.5	5.0 U	5.0	2.4	0.5 U	1	0.5	0.5 U	1	0.5
4-Chloroaniline	---	0.5 U	1	0.5	0.5 U	1	0.5	0.5 U	0.9	0.5	5.0 U	5.0	2.6	0.5 U	1	0.5	0.5 U	1	0.5
bis(2-Chloroethoxy) Methane	---	0.5 U	1	0.5	0.5 U	1	0.5	0.5 U	0.9	0.5	1.0 U	1.0	0.56	0.5 U	1	0.5	0.5 U	1	0.5
Bis-(2-Chloroethyl) Ether	---	0.5 U	1	0.5	0.5 U	1	0.5	0.5 U	0.9	0.5	1.0 U	1.0	0.58	0.5 U	1	0.5	0.5 U	1	0.5
2-Chloronaphthalene	---	0.4 U	1	0.4	0.4 U	1	0.4	0.4 U	0.9	0.4	1.0 U	1.0	0.48	0.4 U	1	0.4	0.4 U	1	0.4
2-Chlorophenol	---	0.5 U	1	0.5	0.5 U	1	0.5	0.5 U	0.9	0.5	1.0 U	1.0	0.53	0.5 U	1	0.5	0.5 U	1	0.5
4-Chlorophenyl-phenylether	---	0.5 U	1	0.5	0.5 U	1	0.5	0.5 U	0.9	0.5	1.0 U	1.0	0.45	0.5 U	1	0.5	0.5 U	1	0.5
2,2'-Oxybis(1-Chloropropane)	---	0.5 U	1	0.5	0.5 U	1	0.5	0.5 U	0.9	0.5	1.0 U	1.0	0.62	0.5 U	1	0.5	0.5 U	1	0.5
Chrysene	0.018	0.1 U	0.5	0.1	0.1 U	0.5	0.1	0.09 U	0.5	0.09	1.0 U	1.0	0.55	0.1 U	0.5	0.1	0.1 U	0.5	0.1
Dibenz(a,h)anthracene	0.0018	0.1 U	0.5	0.1	0.1 U	0.5	0.1	0.09 U	0.5	0.09	1.0 U	1.0	0.48	0.1 U	0.5	0.1	0.1 U	0.5	0.1
Dibenzofuran	1.3	0.5 U	1	0.5	0.5 U	1	0.5	0.5 U	0.9	0.5	1.0 U	1.0	0.48	0.5 U	1	0.5	0.5 U	1	0.5
1,2-Dichlorobenzene	440	0.5 U	1	0.5	0.5 U	1	0.5	0.5 U	0.9	0.5	1.0 U	1.0	0.36	0.5 U	1	0.5	0.5 U	1	0.5
1,3-Dichlorobenzene	---	0.5 U	1	0.5	0.5 U	1	0.5	0.5 U	0.9	0.5	1.0 U	1.0	0.36	0.5 U	1	0.5	0.5 U	1	0.5
1,4-Dichlorobenzene	1.7	0.5 U	1	0.5	0.5 U	1	0.5	0.5 U	0.9	0.5	1.0 U	1.0	0.40	0.5 U	1	0.5	0.5 U	1	0.5
3,3'-Dichlorobenzidine	---	2 U	5	2	2 U	5	2	2 U	5	2	5.0 U	5.0	1.5	2 U	5	2	2 U	5	2
2,4-Dichlorophenol	---	0.5 U	1	0.5	0.5 U	1	0.5	0.5 U	0.9	0.5	5.0 U	5.0	2.6	0.5 U	1	0.5	0.5 U	1	0.5
Diethylphthalate	4,236	2 U	5	2	2 U	5	2	2 U	5	2	1.0 U	1.0	0.58	2 U	5	2	2 U	5	2
2,4-Dimethylphenol	660	0.5 U	1	0.5	0.5 U	1	0.5	0.5 U	0.9	0.5	1.0 U	1.0	0.36	0.5 U	1	0.5	**1**	1	0.5
Dimethylphthalate	1,100,000	2 U	5	2	2 U	5	2	2 U	5	2	1.0 U	1.0	0.53	2 U	5	2	2 U	5	2
4,6-Dinitro-2-Methylphenol	---	5 U	15	5	5 U	14	5	5 U	14	5	10 U	10	3.1	5 U	14	5	5 U	15	5
2,4-Dinitrophenol	---	10 U	30	10	10 U	29	10	9 U	28	9	10 U	10	3.5	10 U	29	10	10 U	29	10
2,4-Dinitrotoluene	---	1 U	5	1	1 U	5	1	0.9 U	5	0.9	5.0 U	5.0	2.5	1 U	5	1	1 U	5	1
2,6-Dinitrotoluene	---	0.5 U	1	0.5	0.5 U	1	0.5	0.5 U	0.9	0.5	5.0 U	5.0	2.4	0.5 U	1	0.5	0.5 U	1	0.5
bis(2-Ethylhexyl)phthalate	1.2	2 U	5	2	2 U	5	2	2 U	5	2	1.0 U	1.0	1.9	2 U	5	2	2 U	5	2

TABLE L-1
GROUNDWATER ANALYTICAL RESULTS
BOEING ISAACSON-THOMPSON
REMEDIAL INVESTIGATION

Location:		IT-MW-1			IT-MW-1			IT-MW-1			IT-MW-2			IT-MW-2			IT-MW-2		
Laboratory Sample ID:	Preliminary	6574126/6574127/UL60B			6697958/6697959/6697960/UZ66A			6790506/6790507/6790508/VJ63C			UA27A/UA27I/UA28A/UA28H/UB45A/UB45H			6574128/6574129/UL60C			6697967/6697968/6697969/UZ66D		
Laboratory Data Package ID:	Cleanup	1294477/UL60			1317686/UZ66			1335985/VJ63			UA27/UA28/UB45			1294477/UL60			1317686/UZ66		
Sample Date:	Levels	03/09/2012			6/21/2012			9/14/2012			12/06/2011			03/09/2012			6/21/2012		
		Result	Reporting Limit	Detection Limit	Result	Reporting Limit	Detection Limit	Result	Reporting Limit	Detection Limit	Result	Reporting Limit	Detection Limit	Result	Reporting Limit	Detection Limit	Result	Reporting Limit	Detection Limit
Fluoranthene	11	0.1 U	0.5	0.1	0.1 U	0.5	0.1	0.09 U	0.5	0.09	1.0 U	1.0	0.52	0.1 U	0.5	0.1	0.1 U	0.5	0.1
Fluorene	45	0.1 U	0.5	0.1	0.1 U	0.5	0.1	0.09 U	0.5	0.09	1.0 U	1.0	0.56	0.1 U	0.5	0.1	0.1 U	0.5	0.1
Hexachlorobenzene	---	0.1 U	0.5	0.1	0.1 U	0.5	0.1	0.09 U	0.5	0.09	1.0 U	1.0	0.47	0.1 U	0.5	0.1	0.1 U	0.5	0.1
Hexachlorobutadiene	---	0.5 U	1	0.5	0.5 U	1	0.5	0.5 U	0.9	0.5	1.0 U	1.0	0.31	0.5 U	1	0.5	0.5 U	1	0.5
Hexachlorocyclopentadiene	---	5 U	15	5	5 U	14	5	5 U	14	5	5.0 U	5.0	1.2	5 U	14	5	5 U	15	5
Hexachloroethane	---	1 U	5	1	1 U	5	1	0.9 U	5	0.9	1.0 U	1.0	0.35	1 U	5	1	1 U	5	1
Indeno(1,2,3-cd)pyrene	0.0018	0.1 U	0.5	0.1	0.1 U	0.5	0.1	0.09 U	0.5	0.09	1.0 U	1.0	0.48	0.1 U	0.5	0.1	0.1 U	0.5	0.1
Isophorone	---	0.5 U	1	0.5	0.5 U	1	0.5	0.5 U	0.9	0.5	1.0 U	1.0	0.48	0.5 U	1	0.5	0.5 U	1	0.5
1-Methylnaphthalene	2.3	0.1 U	0.5	0.1	0.1 U	0.5	0.1	0.09 U	0.5	0.09	1.0 U	1.0	0.48	0.1 U	0.5	0.1	**2**	0.5	0.1
2-Methylnaphthalene	64	0.1 U	0.5	0.1	0.1 U	0.5	0.1	0.09 U	0.5	0.09	1.0 U	1.0	0.48	0.1 U	0.5	0.1	**1**	0.5	0.1
2-Methylphenol	3100	0.5 U	1	0.5	0.5 U	1	0.5	0.5 U	0.9	0.5	1.0 U	1.0	0.53	0.5 U	1	0.5	0.5 U	1	0.5
4-Methylphenol	330	0.5 U	1	0.5	0.5 U	1	0.5	0.5 U	0.9	0.5	1.0 U	1.0	0.52	0.5 U	1	0.5	0.5 U	1	0.5
Naphthalene	26	0.1 U	0.5	0.1	**0.1** J1	0.5	0.1	**0.1** J1	0.5	0.09	1.0 U	1.0	0.52	0.1 U	0.5	0.1	**9**	0.5	0.1
2-Nitroaniline	---	0.5 U	1	0.5	0.5 U	1	0.5	0.5 U	0.9	0.5	5.0 U	5.0	2.6	0.5 U	1	0.5	0.5 U	1	0.5
3-Nitroaniline	---	0.5 U	1	0.5	0.5 U	1	0.5	0.5 U	0.9	0.5	5.0 U	5.0	2.3	0.5 U	1	0.5	0.5 U	1	0.5
4-Nitroaniline	---	0.5 U	1	0.5	0.5 U	1	0.5	0.5 U	0.9	0.5	5.0 U	5.0	2.2	0.5 U	1	0.5	0.5 U	1	0.5
Nitrobenzene	---	0.5 U	1	0.5	0.5 U	1	0.5	0.5 U	0.9	0.5	1.0 U	1.0	0.58	0.5 U	1	0.5	0.5 U	1	0.5
2-Nitrophenol	---	0.5 U	1	0.5	0.5 U	1	0.5	0.5 U	0.9	0.5	5.0 U	5.0	2.0	0.5 U	1	0.5	0.5 U	1	0.5
4-Nitrophenol	---	10 U	30	10	10 U	29	10	9 U	28	9	5.0 U	5.0	2.6	10 U	29	10	10 UJ	29	10
N-Nitroso-Di-N-Propylamine	---	0.5 U	1	0.5	0.5 U	1	0.5	0.5 U	0.9	0.5	1.0 U	1.0	0.56	0.5 U	1	0.5	0.5 U	1	0.5
N-Nitrosodiphenylamine	1.96	0.5 U	1	0.5	0.5 U	1	0.5	0.5 U	0.9	0.5	1.0 U	1.0	0.46	0.5 U	1	0.5	0.5 U	1	0.5
Di-n-Octyl phthalate	---	2 U	5	2	2 U	5	2	2 U	5	2	1.0 U	1.0	0.51	2 U	5	2	2 U	5	2
Pentachlorophenol	---	1 U	5	1	1 U	5	1	0.9 U	5	0.9	5.0 U	5.0	2.4	1 U	5	1	1 U	5	1
Phenanthrene	---	**4**	0.5	0.1	**4**	0.5	0.1	**2**	0.5	0.09	1.0 U	1.0	0.56	0.1 U	0.5	0.1	0.1 U	0.5	0.1
Phenol	41,000	0.5 U	1	0.5	0.5 U	1	0.5	0.5 U	0.9	0.5	1.0 U	1.0	0.52	0.5 U	1	0.5	0.5 U	1	0.5
Pyrene	9.8	0.1 U	0.5	0.1	**0.1** J1	0.5	0.1	0.09 U	0.5	0.09	1.0 U	1.0	0.55	0.1 U	0.5	0.1	0.1 U	0.5	0.1
1,2,4-Trichlorobenzene	1.13	0.5 U	1	0.5	0.5 U	1	0.5	0.5 U	0.9	0.5	1.0 U	1.0	0.38	0.5 U	1	0.5	0.5 U	1	0.5
2,4,5-Trichlorophenol	---	0.5 U	1	0.5	0.5 U	1	0.5	0.5 U	0.9	0.5	5.0 U	5.0	2.2	0.5 U	1	0.5	0.5 U	1	0.5
2,4,6-Trichlorophenol	---	0.5 U	1	0.5	0.5 U	1	0.5	0.5 U	0.9	0.5	5.0 U	5.0	2.4	0.5 U	1	0.5	0.5 U	1	0.5
cPAHs (µg/L)																			
Method SW8270D-SIM																			
Benzo(a)anthracene	0.0018	0.0050 U	0.010	0.0050	0.0048 U	0.0097	0.0048	0.0048 U	0.0095	0.0048	0.010 U	0.010	0.0063	0.0048 U	0.0095	0.0048	0.0049 U	0.0098	0.0049
Benzo(a)pyrene	0.00018	0.0050 U	0.010	0.0050	0.0048 U	0.0097	0.0048	0.0048 U	0.0095	0.0048	0.010 U	0.010	0.0048	0.0048 U	0.0095	0.0048	0.0049 U	0.0098	0.0049
Benzo(b)fluoranthene	0.0018	0.0050 U	0.010	0.0050	0.0048 U	0.0097	0.0048	0.0048 U	0.0095	0.0048	NA	NA	NA	0.0048 U	0.0095	0.0048	0.0049 U	0.0098	0.0049
Benzo(k)fluoranthene	0.0018	0.0050 U	0.010	0.0050	0.0048 U	0.0097	0.0048	0.0048 U	0.0095	0.0048	NA	NA	NA	0.0048 U	0.0095	0.0048	0.0049 U	0.0098	0.0049
Total Benzofluoranthenes	0.0018	NA	NA	NA	NA	NA	NA	NA	NA	NA	0.020 UJ	0.020	0.0099	NA	NA	NA	NA	NA	NA
Chrysene	0.018	0.0050 U	0.010	0.0050	0.0048 U	0.0097	0.0048	0.0048 U	0.0095	0.0048	0.010 U	0.010	0.0046	0.0048 U	0.0095	0.0048	0.0049 U	0.0098	0.0049
Dibenz(a,h)anthracene	0.0018	0.0040 U	0.010	0.0040	0.0039 U	0.0097	0.0039	0.0038 U	0.0095	0.0038	0.010 U	0.010	0.0048	0.0038 U	0.0095	0.0038	0.0039 U	0.0098	0.0039
Indeno(1,2,3-cd)pyrene	0.0018	0.0040 U	0.010	0.0040	0.0039 U	0.0097	0.0039	0.0038 U	0.0095	0.0038	0.010 U	0.010	0.0046	0.0038 U	0.0095	0.0038	0.0039 U	0.0098	0.0039
Pyrene	9.8	0.010 U	0.050	0.010	**0.011** J1	0.048	0.010	**0.011** J1	0.047	0.0095	NA	NA	NA	0.0095 U	0.048	0.0095	0.0098 U	0.049	0.0098
cPAH TEQ	0.00018	ND	NA	NA	ND	NA	NA	ND	NA	NA	ND	NA	NA	ND	NA	NA	ND	NA	NA
PCBs (µg/L)																			
Method SW8082																			
Aroclor 1016	0.000023	0.0059 UJ	0.0098	0.0059	0.0058 U	0.0096	0.0058	0.0058 U	0.0096	0.0058	0.010 U	0.010	0.0025	0.0058 UJ	0.0097	0.0058	0.0060 U	0.010	0.0060
Aroclor 1221	---	0.0059 UJ	0.0098	0.0059	0.0058 U	0.0096	0.0058	0.0058 U	0.0096	0.0058	0.010 U	0.010	0.0028	0.0058 UJ	0.0097	0.0058	0.0060 U	0.010	0.0060
Aroclor 1232	---	0.0069 UJ	0.0098	0.0069	0.0067 U	0.0096	0.0067	0.0068 U	0.0096	0.0068	0.010 U	0.010	0.0028	0.0068 UJ	0.0097	0.0068	0.0070 U	0.010	0.0070
Aroclor 1242	0.000023	0.0059 UJ	0.0098	0.0059	0.0058 U	0.0096	0.0058	0.0058 U	0.0096	0.0058	0.010 U	0.010	0.0028	0.0058 UJ	0.0097	0.0058	0.0060 U	0.010	0.0060
Aroclor 1248	0.000023	0.0049 UJ	0.0098	0.0049	0.0048 U	0.0096	0.0048	0.0048 U	0.0096	0.0048	0.010 U	0.010	0.0028	0.0049 UJ	0.0097	0.0049	0.0050 U	0.010	0.0050
Aroclor 1254	0.0000055	0.0049 UJ	0.0098	0.0049	0.0048 U	0.0096	0.0048	0.0048 U	0.0096	0.0048	0.010 U	0.010	0.0028	0.0049 UJ	0.0097	0.0049	0.0050 U	0.010	0.0050
Aroclor 1260	0.000023	0.0049 UJ	0.0098	0.0049	0.0048 U	0.0096	0.0048	0.0048 U	0.0096	0.0048	0.010 U	0.010	0.0028	0.0049 UJ	0.0097	0.0049	0.0050 U	0.010	0.0050
Total PCBs	0.000023	ND	NA	NA	ND	NA	NA	ND	NA	NA	ND	NA	NA	ND	NA	NA	ND	NA	NA

TABLE L-1
GROUNDWATER ANALYTICAL RESULTS
BOEING ISAACSON-THOMPSON
REMEDIAL INVESTIGATION

Location:		IT-MW-1			IT-MW-1			IT-MW-1			IT-MW-2			IT-MW-2			IT-MW-2		
Laboratory Sample ID:	Preliminary	6574126/6574127/UL60B			6697958/6697959/6697960/UZ66A			6790506/6790507/6790508/VJ63C			UA27A/UA27I/UA28A/UA28H/UB45A/UB45H			6574128/6574129/UL60C			6697967/6697968/6697969/UZ66D		
Laboratory Data Package ID:	Cleanup	1294477/UL60			1317686/UZ66			1335985/VJ63			UA27/UA28/UB45			1294477/UL60			1317686/UZ66		
Sample Date:	Levels	03/09/2012			6/21/2012			9/14/2012			12/06/2011			03/09/2012			6/21/2012		
		Result	Reporting Limit	Detection Limit	Result	Reporting Limit	Detection Limit	Result	Reporting Limit	Detection Limit	Result	Reporting Limit	Detection Limit	Result	Reporting Limit	Detection Limit	Result	Reporting Limit	Detection Limit
TOTAL PETROLEUM HYDROCARBONS (mg/L)																			
NWTPH-Dx																			
Diesel-Range Organics	0.5	0.073 U	0.26	0.075	**0.037** J1	0.095	0.029	0.029 U	0.097	0.029	0.10 U	0.10	0.022	0.070 U	0.25	0.070	**0.041** J1	0.099	0.030
Oil-Range Organics	0.5	1.0 U	3.1	1.0	0.067 U	0.240	0.067	0.068 U	0.240	0.068	0.20 U	0.20	0.044	1.0 U	3.0	1.0	0.069 U	0.250	0.069
NWTPH-G																			
Gasoline-Range Organics	1.0/0.8	0.05 U	0.25	0.05	0.05 U	0.25	0.05	0.05 U	0.25	0.05	0.25 U	0.25	0.06	0.05 U	0.25	0.05	**0.083** J1	0.25	0.05
TOTAL METALS (µg/L)																			
Method 200.8																			
Antimony	---	0.42 U	1.0	0.42	0.33 U	1.0	0.33	0.33 U	1.0	0.33	0.2 U	0.2	0.010	0.42 U	1.0	0.42	0.33 U	1.0	0.33
Arsenic	---	**10.6**	2.0	0.95	**10.8**	2.0	0.20	**12.1**	2.0	0.40	**5.4**	0.2	0.048	**4.8**	2.0	0.95	**1.8** J1	2.0	0.20
Barium	---	**39.7**	2.0	0.69	**52.1**	2.0	0.41	**60.0**	2.0	0.41	**35.7**	0.5	0.020	**38.9**	2.0	0.69	**29.3** J	2.0	0.41
Beryllium	---	0.13 U	0.50	0.13	**0.056** J1	0.50	0.025	**0.054** J1	0.50	0.025	0.2 U	0.2	0.021	0.13 U	0.50	0.13	**0.059** J1	0.50	0.025
Cadmium	---	0.20 U	0.50	0.20	0.048 U	0.50	0.048	0.082 U	0.50	0.082	0.1 U	0.1	0.010	0.20 U	0.50	0.20	0.048 U	0.50	0.048
Chromium	---	**2.6**	2.0	0.60	**2.3**	2.0	0.50	2.8	2.0	0.50	**10**	2	0.22	**9.1**	2.0	0.60	**3.7**	2.0	0.50
Copper	---	0.38 U	2.0	0.38	0.15 U	2.0	0.15	0.40 U	2.0	0.40	**0.8**	0.5	0.158	0.38 U	2.0	0.38	0.15 U	2.0	0.15
Lead	---	0.080 U	1.0	0.080	0.034 U	1.0	0.034	**0.085** J1	1.0	0.034	**0.2**	0.1	0.046	0.080 U	1.0	0.080	0.034 U	1.0	0.034
Nickel	---	**2.0**	2.0	0.50	**1.8** J1	2.0	0.13	**1.9** J1	2.0	0.35	**3.0**	0.5	0.079	**2.4**	2.0	0.50	**1.6** J1	2.0	0.13
Selenium	---	0.27 U	2.0	0.27	**0.18** J1	2.0	0.18	0.50 U	2.0	0.50	**0.8**	0.5	0.127	0.27 U	2.0	0.27	**0.21** J1	2.0	0.18
Silver	---	0.098 U	0.50	0.098	0.10 U	0.50	0.10	0.10 U	0.50	0.10	0.2 U	0.2	0.008	0.098 U	0.50	0.098	0.10 U	0.50	0.10
Thallium	---	0.15 U	0.50	0.15	0.029 U	0.50	0.029	0.15 U	0.50	0.15	0.2 U	0.2	0.004	0.15 U	0.50	0.15	0.029 U	0.50	0.029
Zinc	---	4 U	15.0	4.0	4.4 UJ2	15.0	1.1	**5.1** J1	15.0	1.1	4 U	4	0.50	4.0 U	15.0	4.0	2.1 UJ2	15.0	1.1
Method SW7196A (mg/L)																			
Chromium VI	0.00058	**0.010**	0.010	0.00300	0.010 U	0.010	0.00300	0.010 U	0.010	0.00300	**0.019** J	0.010	0.00300	**0.015** J	0.010	0.00300	0.010 U	0.010	0.00300
Method SW7470A/EPA 1631E (ng/L)																			
Mercury	12	1.60 U	5.00	1.60	1.60 U	5.00	1.60	1.60 U	5.00	1.60	20.0 U	20.0	2.60	3.20 U	10.0	3.20	3.20 U	10.0	3.20
DISSOLVED METALS (µg/L)																			
Methods 200.8/SW7196A																			
Antimony	150	0.42 U	1.0	0.42	0.33 U	1.0	0.33	0.33 U	1.0	0.33	0.2 U	0.2	0.010	0.42 U	1.0	0.42	0.33 U	1.0	0.33
Arsenic	8	**11.1**	2.0	0.95	**10.7**	2.0	0.20	**11.9**	2.0	0.40	**5.1**	0.2	0.048	**5.6**	2.0	0.95	**3.6**	2.0	0.20
Barium	770	**40.2**	2.0	0.69	**54.0**	2.0	0.41	**60.2**	2.0	0.41	**33.2**	0.5	0.020	**40.5**	2.0	0.69	**59.3**	2.0	0.41
Beryllium	12	0.13 U	0.50	0.13	**0.062** J1	0.50	0.025	**0.052** J1	0.50	0.025	0.2 U	0.2	0.021	0.13 U	0.50	0.13	**0.11** J1	0.50	0.025
Cadmium	0.25	0.20 U	0.50	0.20	0.048 U	0.50	0.048	0.082 U	0.50	0.082	0.1 U	0.1	0.010	0.20 U	0.50	0.20	0.048 U	0.50	0.048
Chromium	74	**2.5**	2.0	0.60	**2.4**	2.0	0.50	**2.9**	2.0	0.50	**6.4**	0.5	0.045	**9.1**	2.0	0.60	**7.2**	2.0	0.50
Copper	8	0.38 U	2.0	0.38	**0.33** J1	2.0	0.15	**0.57** J1	2.0	0.40	0.5 U	0.5	0.158	0.38 U	2.0	0.38	0.15 U	2.0	0.15
Lead	2.5	0.080 U	1.0	0.080	**0.035** J1	1.0	0.034	0.034 U	1.0	0.034	0.1 U	0.1	0.046	**0.086** J1	1.0	0.080	**0.059** J1	1.0	0.034
Nickel	8.2	**2.1**	2.0	0.50	**2.0**	2.0	0.13	**2.1**	2.0	0.35	**2.8**	0.5	0.079	**2.2**	2.0	0.50	**2.9**	2.0	0.13
Selenium	5	0.27 U	2.0	0.27	**0.20** J1	2.0	0.18	0.50 U	2.0	0.50	**0.8**	0.5	0.127	**0.31** J1	2.0	0.27	**0.35** J1	2.0	0.18
Silver	22	0.098 U	0.50	0.098	0.10 U	0.50	0.10	0.10 U	0.50	0.10	0.2 U	0.2	0.008	0.098 U	0.50	0.098	0.10 U	0.50	0.10
Thallium	0.47	0.15 U	0.50	0.15	0.029 U	0.50	0.029	0.15 U	0.50	0.15	0.2 U	0.2	0.004	0.15 U	0.50	0.15	**0.032** J1	0.50	0.029
Zinc	56	4.0 U	15.0	4.0	5.0 UJ2	15.0	1.1	**4.3** J1	15.0	1.1	4 U	4	0.50	4.0 U	15.0	4.0	**3.0** J1	15.0	1.1
Method SW7470A/EPA 1631E (ng/L)																			
Mercury	12	**3.36** J1	5.00	1.60	1.60 U	5.00	1.60	**4.14** J1	5.00	1.60	20.0 U	20.0	2.60	3.20 U	10.0	3.20	3.20 U	10.0	3.20
CONVENTIONALS (mg/L)																			
Chloride (Method 300.0)	---	NA	NA	NA	**10.2**	2.0	1.0	**10.7**	2.0	1.0	NA	NA	NA	NA	NA	NA	**20.8** J	2.0	1.0
Nitrate (Method 300.0)	---	0.050 UJ	0.10	0.050	0.050 U	0.10	0.050	0.050 U	0.10	0.050	0.1 U	0.1	0.007	0.050 U	0.10	0.050	0.050 U	0.10	0.050
Sulfate (Method 300.0)	---	0.30 U	1.0	0.30	**0.47** J1	1.0	0.30	0.30 U	1.0	0.30	**1.8**	0.1	0.059	0.30 U	1.0	0.30	**22.3** J	5.0	1.5
Total Dissolved Solids (Method 160.1)	---	**368**	30.0	9.7	**408**	30.0	9.7	**404**	30.0	9.7	**565**	10.0	10.0	**506**	60.0	19.4	**560**	60.0	19.4
FIELD PARAMETERS																			
Temperature (°C)	---	16.90	NA	NA	16.75	NA	NA	16.97	NA	NA	17.59	NA	NA	17.21	NA	NA	17.00	NA	NA
Conductivity (uS/cm)	---	904	NA	NA	691	NA	NA	847	NA	NA	949	NA	NA	1109	NA	NA	981	NA	NA
Dissolved Oxygen (mg/L)	---	0.35	NA	NA	0.43	NA	NA	1.77	NA	NA	0.58	NA	NA	0.44	NA	NA	0.36	NA	NA
pH (SU)	---	8.48	NA	NA	7.03	NA	NA	6.63	NA	NA	6.16	NA	NA	8.54	NA	NA	7.69	NA	NA
ORP (mV)	---	-121.4	NA	NA	-104.1	NA	NA	-118	NA	NA	-15.55	NA	NA	-126.9	NA	NA	-94.6	NA	NA
Turbidity (NTU)	---	2.04	NA	NA	NA	NA	NA	5.04	NA	NA	1.83	NA	NA	4.79	NA	NA	1.54	NA	NA
Ferrous Iron (mg/L)	---	2.6	NA	NA	2.4	NA	NA	2.6	NA	NA	NA	NA	NA	3.0	NA	NA	3.0	NA	NA

TABLE L-1
GROUNDWATER ANALYTICAL RESULTS
BOEING ISAACSON-THOMPSON
REMEDIAL INVESTIGATION

Location:		IT-MW-2			IT-MW-3			IT-MW-3			IT-MW-3			IT-MW-3			IT-MW-4		
Laboratory Sample ID:	Preliminary	6790503/6790504/6790505/VJ63B			UA27C/UA27K/UA28C/UA28J/UB45C/UB45J			6574130/6574131/UL60D			6697961/6697962/6697963/UZ66B			6790500/6790501/6790502/VJ63A			UB28C/UB28I/UB29C/UB29H/UD90A		
Laboratory Data Package ID:	Cleanup	1335985/VJ63			UA27/UA28/UB45			1294477/UL60			1317686/UZ66			1335985/VJ63			UB28/UB29/UD90		
Sample Date:	Levels	9/14/2012			12/06/2011			03/09/2012			6/21/2012			9/14/2012			12/14/2011		
		Result	Reporting Limit	Detection Limit	Result	Reporting Limit	Detection Limit	Result	Reporting Limit	Detection Limit	Result	Reporting Limit	Detection Limit	Result	Reporting Limit	Detection Limit	Result	Reporting Limit	Detection Limit
VOLATILES (µg/L)																			
Method SW8260C																			
Acetone	110,000	15 U	25	15	2.2 UJ2	5.0	0.72	3.0 U	5.0	3.0	3.0 U	5.0	3.0	3.0 U	5.0	3.0	5.0 U	5.0	2.1
Acrolein	---	25 U	130	25	5.0 UJ	5.0	0.29	5.0 U	25	5.0	5.0 U	25	5.0	5.0 U	25	5.0	5.0 U	5.0	2.5
Acrylonitrile	0.057	5.0 U	25	5.0	1.0 U	1.0	0.18	1.0 U	5.0	1.0	1.0 U	5.0	1.0	1.0 U	5.0	1.0	1.0 U	1.0	0.60
Benzene	2	0.5 U	1.0	0.5	0.2 U	0.2	0.06	0.1 U	0.2	0.1	0.1 U	0.2	0.1	0.1 U	0.2	0.1	0.2 U	0.2	0.03
Bromobenzene	---	0.5 U	2.5	0.5	0.2 U	0.2	0.05	0.1 U	0.5	0.1	0.1 U	0.5	0.1	0.1 U	0.5	0.1	0.2 U	0.2	0.06
Bromochloromethane	---	0.5 U	2.5	0.5	0.2 U	0.2	0.07	0.1 U	0.5	0.1	0.1 U	0.5	0.1	0.1 U	0.5	0.1	0.2 U	0.2	0.06
Bromodichloromethane	17	0.5 U	2.5	0.5	0.2 U	0.2	0.05	0.1 U	0.5	0.1	0.1 U	0.5	0.1	0.1 U	0.5	0.1	0.2 U	0.2	0.05
Bromoform	---	0.5 U	2.5	0.5	0.2 U	0.2	0.07	0.1 U	0.5	0.1	0.1 UJ	0.5	0.1	0.1 U	0.5	0.1	0.2 UJ	0.2	0.06
Bromomethane	---	0.5 U	2.5	0.5	1.0 U	1.0	0.04	0.1 U	0.5	0.1	0.1 U	0.5	0.1	0.1 U	0.5	0.1	1.0 U	1.0	0.25
2-Butanone	73,000	5.0 U	25	5.0	5.0 U	5.0	0.81	1.0 U	5.0	1.0	1.0 U	5.0	1.0	1.0 U	5.0	1.0	5.0 U	5.0	0.81
n-Butylbenzene	780	0.5 U	2.5	0.5	0.2 U	0.2	0.11	0.1 U	0.5	0.1	0.1 U	0.5	0.1	0.1 U	0.5	0.1	0.2 U	0.2	0.02
sec-Butylbenzene	---	0.5 U	2.5	0.5	0.2 U	0.2	0.08	0.1 U	0.5	0.1	0.1 U	0.5	0.1	0.1 U	0.5	0.1	0.2 U	0.2	0.02
tert-Butylbenzene	---	0.5 U	2.5	0.5	0.2 U	0.2	0.06	0.1 U	0.5	0.1	0.1 U	0.5	0.1	0.1 U	0.5	0.1	0.2 U	0.2	0.03
Carbon Disulfide	3900	2.0 U	2.5	2.0	0.2 U	0.2	0.09	0.4 U	0.5	0.4	0.4 U	0.5	0.4	0.4 U	0.5	0.4	0.2 U	0.2	0.04
Carbon Tetrachloride	0.46	0.5 U	1.0	0.5	0.2 U	0.2	0.08	0.1 U	0.2	0.1	0.1 U	0.2	0.1	0.1 U	0.2	0.1	0.2 U	0.2	0.04
Chlorobenzene	270	0.5 U	2.5	0.5	0.2 U	0.2	0.04	0.1 U	0.5	0.1	0.1 U	0.5	0.1	0.1 U	0.5	0.1	0.2 U	0.2	0.02
Chloroethane	21,000	0.5 U	2.5	0.5	0.2 U	0.2	0.15	0.1 U	0.5	0.1	0.1 U	0.5	0.1	0.1 U	0.5	0.1	0.2 U	0.2	0.09
Chloroform	9.4	0.5 U	1.0	0.5	0.2 U	0.2	0.08	0.1 U	0.2	0.1	0.1 U	0.2	0.1	0.1 U	0.2	0.1	0.2 U	0.2	0.03
Chloromethane	10.3	1.0 U	2.5	1.0	0.5 U	0.5	0.10	0.2 U	0.5	0.2	0.2 U	0.5	0.2	0.2 U	0.5	0.2	0.5 U	0.5	0.10
2-Chlorotoluene	---	0.5 U	2.5	0.5	0.2 U	0.2	0.04	0.1 U	0.5	0.1	0.1 U	0.5	0.1	0.1 U	0.5	0.1	0.2 U	0.2	0.02
4-Chlorotoluene	2600	0.5 U	2.5	0.5	0.2 U	0.2	0.07	0.1 U	0.5	0.1	0.1 U	0.5	0.1	0.1 U	0.5	0.1	0.2 U	0.2	0.02
1,2-Dibromo-3-chloropropane	---	1.0 U	2.5	1.0	0.5 UJ	0.5	0.21	0.2 U	0.5	0.2	0.2 U	0.5	0.2	0.2 U	0.5	0.2	0.5 U	0.5	0.04
Dibromochloromethane	---	0.5 U	2.5	0.5	0.2 U	0.2	0.09	0.1 U	0.5	0.1	0.1 U	0.5	0.1	0.1 U	0.5	0.1	0.2 U	0.2	0.05
Dibromomethane	---	0.5 U	2.5	0.5	0.2 U	0.2	0.08	0.1 U	0.5	0.1	0.1 U	0.5	0.1	0.1 U	0.5	0.1	0.2 U	0.2	0.14
trans-1,4-Dichloro-2-butene	---	5.0 U	25	5.0	1.0 UJ	1.0	0.24	1.0 U	5.0	1.0	1.0 UJ	5.0	1.0	1.0 U	5.0	1.0	1.0 U	1.0	0.32
1,2-Dichlorobenzene	440	0.5 U	2.5	0.5	0.2 U	0.2	0.06	0.1 U	0.5	0.1	0.1 U	0.5	0.1	0.1 U	0.5	0.1	0.2 U	0.2	0.04
1,3-Dichlorobenzene	960	0.5 U	2.5	0.5	0.2 U	0.2	0.04	0.1 U	0.5	0.1	0.1 U	0.5	0.1	0.1 U	0.5	0.1	0.2 U	0.2	0.04
1,4-Dichlorobenzene	1.7	0.5 U	2.5	0.5	0.2 U	0.2	0.06	0.1 U	0.5	0.1	0.1 U	0.5	0.1	0.1 U	0.5	0.1	0.2 U	0.2	0.04
1,1-Dichloroethane	33	0.5 U	2.5	0.5	0.2 U	0.2	0.05	0.1 U	0.5	0.1	0.1 U	0.5	0.1	0.1 U	0.5	0.1	0.2 U	0.2	0.05
1,2-Dichloroethane	3.6	0.5 U	1.0	0.5	0.2 U	0.2	0.08	0.1 U	0.2	0.1	0.1 U	0.2	0.1	0.1 U	0.2	0.1	0.2 U	0.2	0.07
1,1-Dichloroethene	3.2	0.5 U	1.0	0.5	0.2 U	0.2	0.09	0.1 U	0.2	0.1	0.1 U	0.2	0.1	0.1 U	0.2	0.1	0.2 U	0.2	0.05
cis-1,2-Dichloroethene	130	0.5 U	1.0	0.5	**0.2** J1	0.2	0.10	**0.2** J1	0.2	0.1	0.1 U	0.2	0.1	0.1 U	0.2	0.1	0.2 U	0.2	0.04
trans-1,2-Dichloroethene	940	0.5 U	1.0	0.5	0.2 U	0.2	0.08	0.1 U	0.2	0.1	0.1 U	0.2	0.1	0.1 U	0.2	0.1	0.2 U	0.2	0.05
1,2-Dichloropropane	3.7	0.5 U	2.5	0.5	**0.1** J1	0.2	0.09	0.1 U	0.5	0.1	**0.2** J1	0.5	0.1	**0.1** J1	0.5	0.1	0.2 U	0.2	0.04
1,3-Dichloropropane	---	0.5 U	2.5	0.5	0.2 U	0.2	0.02	0.1 U	0.5	0.1	0.1 U	0.5	0.1	0.1 U	0.5	0.1	0.2 U	0.2	0.06
2,2-Dichloropropane	---	0.5 U	2.5	0.5	0.2 U	0.2	0.08	0.1 U	0.5	0.1	0.1 U	0.5	0.1	0.1 U	0.5	0.1	0.2 U	0.2	0.05
1,1-Dichloropropene	---	0.5 U	2.5	0.5	0.2 U	0.2	0.09	0.1 U	0.5	0.1	0.1 U	0.5	0.1	0.1 U	0.5	0.1	0.2 U	0.2	0.03
cis-1,3-Dichloropropene	---	0.5 U	1.0	0.5	0.2 U	0.2	0.06	0.1 U	0.2	0.1	0.1 U	0.2	0.1	0.1 U	0.2	0.1	0.2 U	0.2	0.06
trans-1,3-Dichloropropene	---	0.5 U	1.0	0.5	0.2 U	0.2	0.06	0.1 U	0.2	0.1	0.1 U	0.2	0.1	0.1 U	0.2	0.1	0.2 U	0.2	0.08
Ethylbenzene	1.7	0.5 U	2.5	0.5	0.2 U	0.2	0.09	0.1 U	0.5	0.1	0.1 U	0.5	0.1	0.1 U	0.5	0.1	0.2 U	0.2	0.04
Ethylene Dibromide	---	0.5 U	2.5	0.5	0.2 U	0.2	0.08	0.1 U	0.5	0.1	0.1 U	0.5	0.1	0.1 U	0.5	0.1	0.2 U	0.2	0.08
Hexachlorobutadiene	---	0.5 U	2.5	0.5	0.5 U	0.5	0.11	0.1 U	0.5	0.1	0.1 U	0.5	0.1	0.1 U	0.5	0.1	0.5 U	0.5	0.07
2-Hexanone	3200	5.0 U	25	5.0	5.0 U	5.0	0.31	1.0 U	5.0	1.0	1.0 U	5.0	1.0	1.0 U	5.0	1.0	5.0 U	5.0	0.90
Isopropylbenzene	270	0.5 U	2.5	0.5	0.2 U	0.2	0.06	0.1 U	0.5	0.1	0.1 U	0.5	0.1	0.1 U	0.5	0.1	0.2 U	0.2	0.02
4-Isopropyltoluene	---	0.5 U	2.5	0.5	0.2 U	0.2	0.08	0.1 U	0.5	0.1	0.1 U	0.5	0.1	0.1 U	0.5	0.1	0.2 U	0.2	0.03
Methyl Iodide	---	0.5 U	2.5	0.5	1.0 U	1.0	0.04	0.1 U	0.5	0.1	0.1 U	0.5	0.1	0.1 U	0.5	0.1	1.0 U	1.0	0.23
4-Methyl-2-Pentanone (MIBK)	19,000	5.0 U	25	5.0	5.0 U	5.0	0.38	1.0 U	5.0	1.0	1.0 U	5.0	1.0	1.0 U	5.0	1.0	5.0 U	5.0	0.97
Methylene Chloride	230	1.0 U	2.5	1.0	0.5 U	0.5	0.39	0.2 U	0.5	0.2	0.2 U	0.5	0.2	0.2 U	0.5	0.2	0.5 U	0.5	0.48
Naphthalene	26	**6.2**	2.5	0.5	0.5 U	0.5	0.07	0.1 U	0.5	0.1	0.1 U	0.5	0.1	0.1 U	0.5	0.1	0.5 U	0.5	0.12
n-Propylbenzene	530	0.5 U	2.5	0.5	0.2 U	0.2	0.08	0.1 U	0.5	0.1	0.1 U	0.5	0.1	0.1 U	0.5	0.1	0.2 U	0.2	0.02
Styrene	77,000	0.5 U	2.5	0.5	0.2 U	0.2	0.07	0.1 U	0.5	0.1	0.1 U	0.5	0.1	0.1 U	0.5	0.1	0.2 U	0.2	0.04
1,1,1,2-Tetrachloroethane	---	0.5 U	2.5	0.5	0.2 U	0.2	0.07	0.1 U	0.5	0.1	0.1 U	0.5	0.1	0.1 U	0.5	0.1	0.2 U	0.2	0.04
1,1,2,2-Tetrachloroethane	0.33	0.5 U	1.0	0.5	0.2 U	0.2	0.07	0.1 U	0.2	0.1	0.1 U	0.2	0.1	0.1 U	0.2	0.1	0.2 U	0.2	0.06
Tetrachloroethene	3.3	0.5 U	1.0	0.5	0.2 U	0.2	0.09	0.1 U	0.2	0.1	0.1 U	0.2	0.1	0.1 U	0.2	0.1	0.2 U	0.2	0.05
Toluene	1300	0.5 U	1.0	0.5	0.2 U	0.2	0.06	0.1 U	0.2	0.1	0.1 U	0.2	0.1	0.1 U	0.2	0.1	0.2 U	0.2	0.04
1,1,2-Trichloro-1,2,2-trifuoroethane	59,000	1.0 U	2.5	1.0	0.2 U	0.2	0.11	0.2 U	0.5	0.2	0.2 U	0.5	0.2	0.2 U	0.5	0.2	0.2 U	0.2	0.04
1,2,3-Trichlorobenzene	---	0.5 U	2.5	0.5	0.5 U	0.5	0.09	0.1 U	0.5	0.1	0.1 U	0.5	0.1	0.1 U	0.5	0.1	0.5 U	0.5	0.11

TABLE L-1
GROUNDWATER ANALYTICAL RESULTS
BOEING ISAACSON-THOMPSON
REMEDIAL INVESTIGATION

Location:		IT-MW-2			IT-MW-3			IT-MW-3			IT-MW-3			IT-MW-3			IT-MW-4		
Laboratory Sample ID:	Preliminary	6790503/6790504/6790505/VJ63B			UA27C/UA27K/UA28C/UA28J/UB45C/UB45J			6574130/6574131/UL60D			6697961/6697962/6697963/UZ66B			6790500/6790501/6790502/VJ63A			UB28C/UB28I/UB29C/UB29H/UD90A		
Laboratory Data Package ID:	Cleanup	1335985/VJ63			UA27/UA28/UB45			1294477/UL60			1317686/UZ66			1335985/VJ63			UB28/UB29/UD90		
Sample Date:	Levels	9/14/2012			12/06/2011			03/09/2012			6/21/2012			9/14/2012			12/14/2011		
		Result	Reporting Limit	Detection Limit	Result	Reporting Limit	Detection Limit	Result	Reporting Limit	Detection Limit	Result	Reporting Limit	Detection Limit	Result	Reporting Limit	Detection Limit	Result	Reporting Limit	Detection Limit
1,2,4-Trichlorobenzene	1.13	0.5 U	2.5	0.5	0.5 U	0.5	0.10	0.1 U	0.5	0.1	0.1 U	0.5	0.1	0.1 U	0.5	0.1	0.5 U	0.5	0.11
1,1,1-Trichloroethane	46,000	0.5 U	2.5	0.5	0.2 U	0.2	0.09	0.1 U	0.5	0.1	0.1 U	0.5	0.1	0.1 U	0.5	0.1	0.2 U	0.2	0.04
1,1,2-Trichloroethane	2.3	0.5 U	1.0	0.5	0.2 U	0.2	0.04	0.1 U	0.2	0.1	0.1 U	0.2	0.1	0.1 U	0.2	0.1	0.2 U	0.2	0.13
Trichloroethene	1.4	0.5 U	1.0	0.5	0.2 U	0.2	0.08	0.1 U	0.2	0.1	0.1 U	0.2	0.1	0.1 U	0.2	0.1	0.2 U	0.2	0.05
Trichlorofluoromethane	6900	0.5 U	2.5	0.5	0.2 U	0.2	0.09	0.1 U	0.5	0.1	0.1 U	0.5	0.1	0.1 U	0.5	0.1	0.2 U	0.2	0.04
1,2,3-Trichloropropane	---	1.5 U	5.0	1.5	0.5 U	0.5	0.23	0.3 U	1.0	0.3	0.3 U	1.0	0.3	0.3 U	1.0	0.3	0.5 U	0.5	0.13
1,2,4-Trimethylbenzene	303	0.5 U	2.5	0.5	0.2 U	0.2	0.06	0.1 U	0.5	0.1	0.1 U	0.5	0.1	0.1 U	0.5	0.1	0.2 U	0.2	0.02
1,3,5-Trimethylbenzene	303	0.5 U	2.5	0.5	0.2 U	0.2	0.06	0.1 U	0.5	0.1	0.1 U	0.5	0.1	0.1 U	0.5	0.1	0.2 U	0.2	0.02
Vinyl Acetate	---	1.0 U	2.5	1.0	1.0 U	1.0	0.07	0.2 U	0.5	0.2	0.2 U	0.5	0.2	0.2 U	0.5	0.2	1.0 U	1.0	0.07
Vinyl Chloride	0.53	0.5 U	1.0	0.5	**0.1** J1	0.2	0.08	**0.1** J1	0.2	0.1	**0.3**	0.2	0.1	**0.2** J1	0.2	0.1	0.2 U	0.2	0.06
m,p-Xylene	1300	0.5 U	2.5	0.5	0.4 U	0.4	0.14	0.1 U	0.5	0.1	0.1 U	0.5	0.1	0.1 U	0.5	0.1	0.4 U	0.4	0.05
o-Xylene	1600	0.5 U	2.5	0.5	**0.2** J1	0.2	0.06	**0.1** J1	0.5	0.1	**0.1** J1	0.5	0.1	**0.1** J1	0.5	0.1	0.2 U	0.2	0.04
2-Chloroethylvinylether	---	NA	NA	NA	1.0 U	1.0	0.09	NA	NA	NA	NA	NA	NA	NA	NA	NA	1.0 U	1.0	0.25
Bromoethane	---	NA	NA	NA	0.2 U	0.2	0.09	NA	NA	NA	NA	NA	NA	NA	NA	NA	0.2 U	0.2	0.04
VOLATILES (µg/L)																			
Method SW8260C-SIM																			
Tetrachloroethene	3.3	0.010 U	0.020	0.010	0.020 U	0.020	0.0036	0.010 U	0.020	0.010	0.010 U	0.020	0.010	0.010 U	0.020	0.010	0.020 U	0.020	0.0036
Vinyl Chloride	0.53	**0.40**	0.020	0.010	**0.12**	0.020	0.0022	**0.10**	0.020	0.010	**0.34**	0.020	0.010	**0.17**	0.020	0.010	0.020 U	0.020	0.0022
Acrylonitrile	0.057	NA	NA	NA	0.050 U	0.050	0.0158	NA	NA	NA	NA	NA	NA	NA	NA	NA	0.050 U	0.050	0.0158
SEMIVOLATILES (µg/L)																			
Method SW8270D																			
Acenaphthene	120	**3**	0.5	0.1	**9.2**	1.0	0.55	**6**	0.5	0.1	**7**	0.5	0.09	**4**	0.5	0.1	1.0 U	1.0	0.55
Acenaphthylene	---	0.1 U	0.5	0.1	1.0 U	1.0	0.48	0.1 U	0.5	0.1	0.09 U	0.5	0.09	0.1 U	0.5	0.1	1.0 U	1.0	0.48
Anthracene	200	0.1 U	0.5	0.1	1.0 U	1.0	0.53	0.1 U	0.5	0.1	0.09 U	0.5	0.09	0.1 U	0.5	0.1	1.0 U	1.0	0.53
Benzo(a)anthracene	0.0018	0.1 U	0.5	0.1	1.0 U	1.0	0.52	0.1 U	0.5	0.1	0.09 U	0.5	0.09	0.1 U	0.5	0.1	1.0 U	1.0	0.52
Benzo(a)pyrene	0.00018	0.1 U	0.5	0.1	1.0 U	1.0	0.48	0.1 U	0.5	0.1	0.09 U	0.5	0.09	0.1 U	0.5	0.1	1.0 U	1.0	0.48
Benzo(b)fluoranthene	0.0018	0.1 U	0.5	0.1	NA	NA	NA	0.1 U	0.5	0.1	0.09 U	0.5	0.09	0.1 U	0.5	0.1	NA	NA	NA
Benzo(g,h,i)perylene	---	0.1 U	0.5	0.1	1.0 U	1.0	0.55	0.1 U	0.5	0.1	0.09 U	0.5	0.09	0.1 U	0.5	0.1	1.0 U	1.0	0.55
Benzo(k)fluoranthene	0.0018	0.1 U	0.5	0.1	NA	NA	NA	0.1 U	0.5	0.1	0.09 U	0.5	0.09	0.1 U	0.5	0.1	NA	NA	NA
Total Benzofluoranthenes	0.0018	NA	NA	NA	1.0 U	1.0	0.48	NA	NA	NA	NA	NA	NA	NA	NA	NA	1.0 U	1.0	0.48
Benzoic Acid	2,240	6 U	14	6	10 UJ	10	5.1	6 R	15	6	6 U	14	6	6 U	15	6	10 UJ	10	5.1
Benzyl Alcohol	182	5 U	14	5	5.0 U	5.0	2.0	5 U	15	5	5 U	14	5	5 U	15	5	5.0 U	5.0	2.0
4-Bromophenyl-phenylether	---	0.5 U	1	0.5	1.0 U	1.0	0.42	0.5 U	1	0.5	0.5 U	0.9	0.5	0.5 U	1	0.5	1.0 U	1.0	0.42
Butylbenzylphthalate	0.41	2 U	5	2	1.0 U	1.0	0.56	2 U	5	2	2 U	5	2	2 U	5	2	1.0 U	1.0	0.56
Di-n-Butylphthalate	47	2 U	5	2	1.0 U	1.0	0.54	2 U	5	2	2 U	5	2	2 U	5	2	1.0 U	1.0	0.54
Carbazole	---	0.5 U	1	0.5	**3.5**	1.0	0.31	**3**	1	0.5	**1**	0.9	0.5	0.5 U	1	0.5	1.0 U	1.0	0.31
4-Chloro-3-methylphenol	3700	0.5 U	1	0.5	5.0 U	5.0	2.4	0.5 U	1	0.5	0.5 U	0.9	0.5	0.5 U	1	0.5	5.0 U	5.0	2.4
4-Chloroaniline	---	0.5 U	1	0.5	5.0 U	5.0	2.6	0.5 U	1	0.5	0.5 U	0.9	0.5	0.5 U	1	0.5	5.0 U	5.0	2.6
bis(2-Chloroethoxy) Methane	---	0.5 U	1	0.5	1.0 U	1.0	0.56	0.5 U	1	0.5	0.5 U	0.9	0.5	0.5 U	1	0.5	1.0 U	1.0	0.56
Bis-(2-Chloroethyl) Ether	---	0.5 U	1	0.5	1.0 U	1.0	0.58	0.5 U	1	0.5	0.5 U	0.9	0.5	0.5 U	1	0.5	1.0 U	1.0	0.58
2-Chloronaphthalene	---	0.4 U	1	0.4	1.0 U	1.0	0.48	0.4 U	1	0.4	0.4 U	0.9	0.4	0.4 U	1	0.4	1.0 U	1.0	0.48
2-Chlorophenol	---	0.5 U	1	0.5	1.0 U	1.0	0.53	0.5 U	1	0.5	0.5 U	0.9	0.5	0.5 U	1	0.5	1.0 U	1.0	0.53
4-Chlorophenyl-phenylether	---	0.5 U	1	0.5	1.0 U	1.0	0.45	0.5 U	1	0.5	0.5 U	0.9	0.5	0.5 U	1	0.5	1.0 U	1.0	0.45
2,2'-Oxybis(1-Chloropropane)	---	0.5 U	1	0.5	1.0 U	1.0	0.62	0.5 U	1	0.5	0.5 U	0.9	0.5	0.5 U	1	0.5	1.0 U	1.0	0.62
Chrysene	0.018	0.1 U	0.5	0.1	1.0 U	1.0	0.55	0.1 U	0.5	0.1	0.09 U	0.5	0.09	0.1 U	0.5	0.1	1.0 U	1.0	0.55
Dibenz(a,h)anthracene	0.0018	0.1 U	0.5	0.1	1.0 U	1.0	0.48	0.1 U	0.5	0.1	0.09 U	0.5	0.09	0.1 U	0.5	0.1	1.0 U	1.0	0.48
Dibenzofuran	1.3	0.5 U	1	0.5	1.0 U	1.0	0.48	0.5 U	1	0.5	0.5 U	0.9	0.5	0.5 U	1	0.5	1.0 U	1.0	0.48
1,2-Dichlorobenzene	440	0.5 U	1	0.5	1.0 U	1.0	0.36	0.5 U	1	0.5	0.5 U	0.9	0.5	0.5 U	1	0.5	1.0 U	1.0	0.36
1,3-Dichlorobenzene	---	0.5 U	1	0.5	1.0 U	1.0	0.36	0.5 U	1	0.5	0.5 U	0.9	0.5	0.5 U	1	0.5	1.0 U	1.0	0.36
1,4-Dichlorobenzene	1.7	0.5 U	1	0.5	1.0 U	1.0	0.40	0.5 U	1	0.5	0.5 U	0.9	0.5	0.5 U	1	0.5	1.0 U	1.0	0.40
3,3'-Dichlorobenzidine	---	2 U	5	2	5.0 U	5.0	1.5	2 U	5	2	2 U	5	2	2 U	5	2	5.0 U	5.0	1.5
2,4-Dichlorophenol	---	0.5 U	1	0.5	5.0 U	5.0	2.6	0.5 U	1	0.5	0.5 U	0.9	0.5	0.5 U	1	0.5	5.0 U	5.0	2.6
Diethylphthalate	4,236	2 U	5	2	1.0 U	1.0	0.58	2 U	5	2	2 U	5	2	2 U	5	2	1.0 U	1.0	0.58
2,4-Dimethylphenol	660	**1**	1	0.5	1.0 U	1.0	0.36	0.5 U	1	0.5	0.5 U	0.9	0.5	**0.7** J1	1	0.5	1.0 U	1.0	0.36
Dimethylphthalate	1,100,000	2 U	5	2	1.0 U	1.0	0.53	2 U	5	2	2 U	5	2	2 U	5	2	1.0 U	1.0	0.53
4,6-Dinitro-2-Methylphenol	---	5 U	14	5	10 U	10	3.1	5 U	15	5	5 U	14	5	5 U	15	5	10 U	10	3.1
2,4-Dinitrophenol	---	10 U	29	10	10 U	10	3.5	10 U	30	10	9 U	28	9	10 U	29	10	10 UJ	10	3.5
2,4-Dinitrotoluene	---	1 U	5	1	5.0 U	5.0	2.5	1 U	5	1	0.9 U	5	0.9	1 U	5	1	5.0 U	5.0	2.5
2,6-Dinitrotoluene	---	0.5 U	1	0.5	5.0 U	5.0	2.4	0.5 U	1	0.5	0.5 U	0.9	0.5	0.5 U	1	0.5	5.0 U	5.0	2.4
bis(2-Ethylhexyl)phthalate	1.2	2 U	5	2	1.0 U	1.0	1.9	2 U	5	2	2 U	5	2	2 U	5	2	1.0 U	1.0	1.9

TABLE L-1
GROUNDWATER ANALYTICAL RESULTS
BOEING ISAACSON-THOMPSON
REMEDIAL INVESTIGATION

Location:		IT-MW-2			IT-MW-3			IT-MW-3			IT-MW-3			IT-MW-3			IT-MW-4		
Laboratory Sample ID:	Preliminary	6790503/6790504/6790505/VJ63B			UA27C/UA27K/UA28C/UA28J/UB45C/UB45J			6574130/6574131/UL60D			6697961/6697962/6697963/UZ66B			6790500/6790501/6790502/VJ63A			UB28C/UB28I/UB29C/UB29H/UD90A		
Laboratory Data Package ID:	Cleanup	1335985/VJ63			UA27/UA28/UB45			1294477/UL60			1317686/UZ66			1335985/VJ63			UB28/UB29/UD90		
Sample Date:	Levels	9/14/2012			12/06/2011			03/09/2012			6/21/2012			9/14/2012			12/14/2011		
		Result	Reporting Limit	Detection Limit	Result	Reporting Limit	Detection Limit	Result	Reporting Limit	Detection Limit	Result	Reporting Limit	Detection Limit	Result	Reporting Limit	Detection Limit	Result	Reporting Limit	Detection Limit
Fluoranthene	11	0.1 U	0.5	0.1	1.0 U	1.0	0.52	0.1 U	0.5	0.1	0.09 U	0.5	0.09	0.1 U	0.5	0.1	1.0 U	1.0	0.52
Fluorene	45	0.1 U	0.5	0.1	1.0 U	1.0	0.56	0.1 J	0.5	0.1	0.09 U	0.5	0.09	0.1 U	0.5	0.1	1.0 U	1.0	0.56
Hexachlorobenzene	---	0.1 U	0.5	0.1	1.0 U	1.0	0.47	0.1 U	0.5	0.1	0.09 U	0.5	0.09	0.1 U	0.5	0.1	1.0 U	1.0	0.47
Hexachlorobutadiene	---	0.5 U	1	0.5	1.0 U	1.0	0.31	0.5 U	1	0.5	0.5 U	0.9	0.5	0.5 U	1	0.5	1.0 U	1.0	0.31
Hexachlorocyclopentadiene	---	5 U	14	5	5.0 U	5.0	1.2	5 U	15	5	5 U	14	5	5 U	15	5	5.0 U	5.0	1.2
Hexachloroethane	---	1 U	5	1	1.0 U	1.0	0.35	1 U	5	1	0.9 U	5	0.9	1 U	5	1	1.0 U	1.0	0.35
Indeno(1,2,3-cd)pyrene	0.0018	0.1 U	0.5	0.1	1.0 U	1.0	0.48	0.1 U	0.5	0.1	0.09 U	0.5	0.09	0.1 U	0.5	0.1	1.0 U	1.0	0.48
Isophorone	---	0.5 U	1	0.5	1.0 U	1.0	0.48	0.5 U	1	0.5	0.5 U	0.9	0.5	0.5 U	1	0.5	1.0 U	1.0	0.48
1-Methylnaphthalene	2.3	**2**	0.5	0.1	1.0 U	1.0	0.48	0.1 U	0.5	0.1	0.09 U	0.5	0.09	0.1 U	0.5	0.1	1.0 U	1.0	0.48
2-Methylnaphthalene	64	**1**	0.5	0.1	1.0 U	1.0	0.48	0.1 U	0.5	0.1	0.09 U	0.5	0.09	0.1 U	0.5	0.1	1.0 U	1.0	0.48
2-Methylphenol	3100	0.5 U	1	0.5	1.0 U	1.0	0.53	0.5 U	1	0.5	0.5 U	0.9	0.5	0.5 U	1	0.5	1.0 U	1.0	0.53
4-Methylphenol	330	0.5 U	1	0.5	1.0 U	1.0	0.52	0.5 U	1	0.5	0.5 U	0.9	0.5	0.5 U	1	0.5	1.0 U	1.0	0.52
Naphthalene	26	**5**	0.5	0.1	1.0 U	1.0	0.52	**0.2** J1	0.5	0.1	**0.1** J1	0.5	0.09	**0.1** J1	0.5	0.1	1.0 U	1.0	0.52
2-Nitroaniline	---	0.5 U	1	0.5	5.0 U	5.0	2.6	0.5 U	1	0.5	0.5 U	0.9	0.5	0.5 U	1	0.5	5.0 U	5.0	2.6
3-Nitroaniline	---	0.5 U	1	0.5	5.0 U	5.0	2.3	0.5 U	1	0.5	0.5 U	0.9	0.5	0.5 U	1	0.5	5.0 U	5.0	2.3
4-Nitroaniline	---	0.5 U	1	0.5	5.0 U	5.0	2.2	0.5 U	1	0.5	0.5 U	0.9	0.5	0.5 U	1	0.5	5.0 U	5.0	2.2
Nitrobenzene	---	0.5 U	1	0.5	1.0 U	1.0	0.58	0.5 U	1	0.5	0.5 U	0.9	0.5	0.5 U	1	0.5	1.0 U	1.0	0.58
2-Nitrophenol	---	0.5 U	1	0.5	5.0 U	5.0	2.0	0.5 U	1	0.5	0.5 U	0.9	0.5	0.5 U	1	0.5	5.0 U	5.0	2.0
4-Nitrophenol	---	10 U	29	10	5.0 U	5.0	2.6	10 U	30	10	9 U	28	9	10 U	29	10	5.0 U	5.0	2.6
N-Nitroso-Di-N-Propylamine	---	0.5 U	1	0.5	1.0 U	1.0	0.56	0.5 U	1	0.5	0.5 U	0.9	0.5	0.5 U	1	0.5	1.0 U	1.0	0.56
N-Nitrosodiphenylamine	1.96	0.5 U	1	0.5	1.0 U	1.0	0.46	0.5 U	1	0.5	0.5 U	0.9	0.5	0.5 U	1	0.5	1.0 U	1.0	0.46
Di-n-Octyl phthalate	---	2 U	5	2	1.0 U	1.0	0.51	2 U	5	2	2 U	5	2	2 U	5	2	1.0 U	1.0	0.51
Pentachlorophenol	---	1 U	5	1	5.0 U	5.0	2.4	1 U	5	1	0.9 U	5	0.9	1 U	5	1	5.0 U	5.0	2.4
Phenanthrene	---	0.1 U	0.5	0.1	1.0 U	1.0	0.56	**0.3** J1	0.5	0.1	**0.4** J1	0.5	0.09	**0.2** J1	0.5	0.1	1.0 U	1.0	0.56
Phenol	41,000	0.5 U	1	0.5	1.0 U	1.0	0.52	0.5 U	1	0.5	0.5 U	0.9	0.5	0.5 U	1	0.5	1.0 U	1.0	0.52
Pyrene	9.8	0.1 U	0.5	0.1	1.0 U	1.0	0.55	0.1 U	0.5	0.1	**0.1** J1	0.5	0.09	0.1 U	0.5	0.1	1.0 U	1.0	0.55
1,2,4-Trichlorobenzene	1.13	0.5 U	1	0.5	1.0 U	1.0	0.38	0.5 U	1	0.5	0.5 U	0.9	0.5	0.5 U	1	0.5	1.0 U	1.0	0.38
2,4,5-Trichlorophenol	---	0.5 U	1	0.5	5.0 U	5.0	2.2	0.5 U	1	0.5	0.5 U	0.9	0.5	0.5 U	1	0.5	5.0 U	5.0	2.2
2,4,6-Trichlorophenol	---	0.5 U	1	0.5	5.0 U	5.0	2.4	0.5 U	1	0.5	0.5 U	0.9	0.5	0.5 U	1	0.5	5.0 U	5.0	2.4
cPAHs (µg/L)																			
Method SW8270D-SIM																			
Benzo(a)anthracene	0.0018	0.0048 U	0.0096	0.0048	0.010 U	0.010	0.0063	0.0048 U	0.0097	0.0048	0.0047 U	0.0095	0.0047	0.0048 U	0.0097	0.0048	0.010 U	0.010	0.0063
Benzo(a)pyrene	0.00018	0.0048 U	0.0096	0.0048	0.010 U	0.010	0.0048	0.0048 U	0.0097	0.0048	0.0047 U	0.0095	0.0047	0.0048 U	0.0097	0.0048	0.010 U	0.010	0.0048
Benzo(b)fluoranthene	0.0018	0.0048 U	0.0096	0.0048	NA	NA	NA	0.0048 U	0.0097	0.0048	0.0047 U	0.0095	0.0047	0.0048 U	0.0097	0.0048	NA	NA	NA
Benzo(k)fluoranthene	0.0018	0.0048 U	0.0096	0.0048	NA	NA	NA	0.0048 U	0.0097	0.0048	0.0047 U	0.0095	0.0047	0.0048 U	0.0097	0.0048	NA	NA	NA
Total Benzofluoranthenes	0.0018	NA	NA	NA	0.020 UJ	0.020	0.0099	NA	NA	NA	NA	NA	NA	NA	NA	NA	0.020 U	0.020	0.0099
Chrysene	0.018	0.0048 U	0.0096	0.0048	0.010 U	0.010	0.0046	0.0048 U	0.0097	0.0048	0.0047 U	0.0095	0.0047	0.0048 U	0.0097	0.0048	0.010 U	0.010	0.0046
Dibenz(a,h)anthracene	0.0018	0.0038 U	0.0096	0.0038	0.010 U	0.010	0.0048	0.0039 U	0.0097	0.0039	0.0038 U	0.0095	0.0038	0.0039 U	0.0097	0.0039	0.010 U	0.010	0.0048
Indeno(1,2,3-cd)pyrene	0.0018	0.0038 U	0.0096	0.0038	0.010 U	0.010	0.0046	0.0039 U	0.0097	0.0039	0.0038 U	0.0095	0.0038	0.0039 U	0.0097	0.0039	0.010 U	0.010	0.0046
Pyrene	9.8	0.0096 U	0.048	0.0096	NA	NA	NA	0.0097 U	0.048	0.0097	0.0095 U	0.047	0.0095	0.0097 U	0.048	0.0097	NA	NA	NA
cPAH TEQ	0.00018	ND	NA	NA	ND	NA	NA	ND	NA	NA	ND	NA	NA	ND	NA	NA	ND	NA	NA
PCBs (µg/L)																			
Method SW8082																			
Aroclor 1016	0.000023	0.0057 U	0.0095	0.0057	0.010 U	0.010	0.0025	0.0060 UJ	0.010	0.0060	0.0057 U	0.0095	0.0057	0.0059 U	0.0099	0.0059	0.010 U	0.010	0.0025
Aroclor 1221	---	0.0057 U	0.0095	0.0057	0.010 U	0.010	0.0028	0.0060 UJ	0.010	0.0060	0.0057 U	0.0095	0.0057	0.0059 U	0.0099	0.0059	0.010 U	0.010	0.0028
Aroclor 1232	---	0.0067 U	0.0095	0.0067	0.010 U	0.010	0.0028	0.0070 UJ	0.010	0.0070	0.0067 U	0.0095	0.0067	0.0069 U	0.0099	0.0069	0.010 U	0.010	0.0028
Aroclor 1242	0.000023	0.0057 U	0.0095	0.0057	0.010 U	0.010	0.0028	0.0060 UJ	0.010	0.0060	0.0057 U	0.0095	0.0057	0.0059 U	0.0099	0.0059	0.010 U	0.010	0.0028
Aroclor 1248	0.000023	0.0048 U	0.0095	0.0048	0.010 U	0.010	0.0028	0.0050 UJ	0.010	0.0050	0.0048 U	0.0095	0.0048	0.0049 U	0.0099	0.0049	0.010 U	0.010	0.0028
Aroclor 1254	0.0000055	0.0048 U	0.0095	0.0048	0.010 U	0.010	0.0028	0.0050 UJ	0.010	0.0050	0.0048 U	0.0095	0.0048	0.0049 U	0.0099	0.0049	0.010 U	0.010	0.0028
Aroclor 1260	0.000023	0.0048 U	0.0095	0.0048	0.010 U	0.010	0.0028	0.0050 UJ	0.010	0.0050	0.0048 U	0.0095	0.0048	0.0049 U	0.0099	0.0049	0.010 U	0.010	0.0028
Total PCBs	0.000023	ND	NA	NA	ND	NA	NA	ND	NA	NA	ND	NA	NA	ND	NA	NA	ND	NA	NA

TABLE L-1
GROUNDWATER ANALYTICAL RESULTS
BOEING ISAACSON-THOMPSON
REMEDIAL INVESTIGATION

Location:		IT-MW-2			IT-MW-3			IT-MW-3			IT-MW-3			IT-MW-3			IT-MW-4		
Laboratory Sample ID:	Preliminary	6790503/6790504/6790505/VJ63B			UA27C/UA27K/UA28C/UA28J/UB45C/UB45J			6574130/6574131/UL60D			6697961/6697962/6697963/UZ66B			6790500/6790501/6790502/VJ63A			UB28C/UB28I/UB29C/UB29H/UD90A		
Laboratory Data Package ID:	Cleanup	1335985/VJ63			UA27/UA28/UB45			1294477/UL60			1317686/UZ66			1335985/VJ63			UB28/UB29/UD90		
Sample Date:	Levels	9/14/2012			12/06/2011			03/09/2012			6/21/2012			9/14/2012			12/14/2011		
		Result	Reporting Limit	Detection Limit	Result	Reporting Limit	Detection Limit	Result	Reporting Limit	Detection Limit	Result	Reporting Limit	Detection Limit	Result	Reporting Limit	Detection Limit	Result	Reporting Limit	Detection Limit
TOTAL PETROLEUM HYDROCARBONS (mg/L)																			
NWTPH-Dx																			
Diesel-Range Organics	0.5	0.028 U	0.095	0.028	0.10 U	0.10	0.022	0.072 U	0.26	0.072	0.029 U	0.096	0.029	0.029 U	0.098	0.029	0.10 U	0.10	0.022
Oil-Range Organics	0.5	0.066 U	0.240	0.066	0.20 U	0.20	0.044	1.0 U	3.1	1.0	0.067 U	0.240	0.067	0.068 U	0.240	0.068	0.20 U	0.20	0.044
NWTPH-G																			
Gasoline-Range Organics	1.0/0.8	0.05 U	0.25	0.05	0.25 U	0.25	0.06	0.05 U	0.25	0.05	0.05 U	0.25	0.05	0.05 U	0.25	0.05	0.25 U	0.25	0.06
TOTAL METALS (µg/L)																			
Method 200.8																			
Antimony	---	0.33 U	1.0	0.33	0.2 U	0.2	0.010	0.42 U	1.0	0.42	0.33 U	1.0	0.33	0.33 U	1.0	0.33	0.2 U	0.2	0.010
Arsenic	---	**5.1**	2.0	0.40	**2.0**	0.2	0.048	**3.3**	2.0	0.95	**1.2** J1	2.0	0.20	**2.0** J1	2.0	0.40	2.1U/**1.8***	0.2	0.048
Barium	---	**73.1**	2.0	0.41	**64.7**	0.5	0.020	**110**	2.0	0.69	**49.7**	2.0	0.41	**73.3**	2.0	0.41	**7.7**	0.5	0.020
Beryllium	---	**0.16** J1	0.50	0.025	0.2 U	0.2	0.021	0.13 U	0.50	0.13	**0.045** J1	0.50	0.025	**0.052** J1	0.50	0.025	0.2 U	0.2	0.021
Cadmium	---	0.082 U	0.50	0.082	0.1 U	0.1	0.010	0.20 U	0.50	0.20	0.048 U	0.50	0.048	0.082 U	0.50	0.082	0.1 U	0.1	0.010
Chromium	---	**9.9**	2.0	0.50	**1.6**	0.5	0.045	**3.2**	2.0	0.60	**1.9** J1	2.0	0.50	**2.5**	2.0	0.50	**1.2**	0.5	0.045
Copper	---	0.40 U	2.0	0.40	0.5 U	0.5	0.158	0.38 U	2.0	0.38	**0.29** J1	2.0	0.15	0.40 U	2.0	0.40	0.5 U	0.5	0.158
Lead	---	**0.067** J1	1.0	0.034	0.1 U	0.1	0.046	0.080 U	1.0	0.080	0.034 U	1.0	0.034	0.034 U	1.0	0.034	0.1 U	0.1	0.046
Nickel	---	**2.9**	2.0	0.35	**1.4**	0.5	0.079	**1.5** J1	2.0	0.50	**0.33** J1	2.0	0.13	**0.87** J1	2.0	0.35	**1.9**	0.5	0.079
Selenium	---	0.50 U	2.0	0.50	**0.7**	0.5	0.127	**0.36** J1	2.0	0.27	0.18 U	2.0	0.18	0.50 U	2.0	0.50	0.5 U	0.5	0.127
Silver	---	0.10 U	0.50	0.10	0.2 U	0.2	0.008	0.098 U	0.50	0.098	0.10 U	0.50	0.10	0.10 U	0.50	0.10	0.2 U	0.2	0.008
Thallium	---	0.15 U	0.50	0.15	0.2 U	0.2	0.004	0.15 U	0.50	0.15	0.029 U	0.50	0.029	0.15 U	0.50	0.15	0.2 U	0.2	0.004
Zinc	---	**2.1** J1	15.0	1.1	4 U	4	0.50	4.0 U	15.0	4.0	2.4 UJ2	15.0	1.1	1.1 U	15.0	1.1	4 U	4	0.50
Method SW7196A (mg/L)																			
Chromium VI	0.00058	0.010 UJ	0.010	0.00300	0.010 U	0.010	0.00300	**0.015**	0.010	0.00300	0.010 U	0.010	0.00300	0.010 U	0.010	0.00300	0.010 U	0.010	0.00300
Method SW7470A/EPA 1631E (ng/L)																			
Mercury	12	3.20 U	10.0	3.20	20.0 U	20.0	2.60	1.60 U	5.00	1.60	1.60 U	5.00	1.60	1.60 U	5.00	1.60	20.0 U	20.0	2.60
DISSOLVED METALS (µg/L)																			
Methods 200.8/SW7196A																			
Antimony	150	0.33 U	1.0	0.33	0.2 U	0.2	0.010	0.42 U	1.0	0.42	0.33 U	1.0	0.33	0.33 U	1.0	0.33	0.2 U	0.2	0.010
Arsenic	8	**4.9**	2.0	0.40	**2.2**	0.2	0.048	**3.6**	2.0	0.95	**0.98** J1	2.0	0.20	**2.3**	2.0	0.40	**1.9**	0.2	0.048
Barium	770	**76.4**	2.0	0.41	**64.8**	0.5	0.020	**112**	2.0	0.69	**50.3**	2.0	0.41	**75.5**	2.0	0.41	**7.6**	0.5	0.020
Beryllium	12	**0.17** J1	0.50	0.025	0.2 U	0.2	0.021	0.13 U	0.50	0.13	**0.037** J1	0.50	0.025	**0.055** J1	0.50	0.025	0.2 U	0.2	0.021
Cadmium	0.25	0.082 U	0.50	0.082	0.1 U	0.1	0.010	0.20 U	0.50	0.20	0.048 U	0.50	0.048	0.082 U	0.50	0.082	0.1 U	0.1	0.010
Chromium	74	**10.8**	2.0	0.50	**1.8**	0.5	0.045	**3.4**	2.0	0.60	**2.0** J1	2.0	0.50	**2.2**	2.0	0.50	**0.8**	0.5	0.045
Copper	8	0.40 U	2.0	0.40	0.5 U	0.5	0.158	0.38 U	2.0	0.38	**0.28** J1	2.0	0.15	**0.47** J1	2.0	0.40	0.5 U	0.5	0.158
Lead	2.5	**0.034** J1	1.0	0.034	0.1 U	0.1	0.046	0.080 U	1.0	0.080	0.034 U	1.0	0.034	0.034 U	1.0	0.034	0.1 U	0.1	0.046
Nickel	8.2	**2.3**	2.0	0.35	**1.4**	0.5	0.079	**1.7** J1	2.0	0.50	**0.37** J1	2.0	0.13	**0.70** J1	2.0	0.35	**2.1**	0.5	0.079
Selenium	5	0.50 U	2.0	0.50	**0.7**	0.5	0.127	**0.30** J1	2.0	0.27	0.18 U	2.0	0.18	0.50 U	2.0	0.50	0.5 U	0.5	0.127
Silver	22	0.10 U	0.50	0.10	0.2 U	0.2	0.008	0.098 U	0.50	0.098	0.10 U	0.50	0.10	0.10 U	0.50	0.10	0.2 U	0.2	0.008
Thallium	0.47	0.15 U	0.50	0.15	0.2 U	0.2	0.004	0.15 U	0.50	0.15	0.029 U	0.50	0.029	0.15 U	0.50	0.15	0.2 U	0.2	0.004
Zinc	56	**3.2** J1	15.0	1.1	4 U	4	0.50	4.0 U	15.0	4.0	5.3 UJ2	15.0	1.1	**1.9** J1	15.0	1.1	4 U	4	0.50
Method SW7470A/EPA 1631E (ng/L)																			
Mercury	12	**4.02** J1	10.0	3.20	20.0 U	20.0	2.60	**5.32** J1	5.00	1.60	**1.94** J1	5.00	1.60	**5.24**	5.00	1.60	20.0 U	20.0	2.60
CONVENTIONALS (mg/L)																			
Chloride (Method 300.0)	---	**12.6** J	2.0	1.0	NA	NA	NA	NA	NA	NA	**9.7**	2.0	1.0	**9.7**	2.0	1.0	NA	NA	NA
Nitrate (Method 300.0)	---	0.050 U	0.10	0.050	0.1 U	0.1	0.007	0.050 U	0.10	0.050	0.050 U	0.10	0.050	0.050 U	0.10	0.050	0.1 U	0.1	0.007
Sulfate (Method 300.0)	---	**1.6**	1.0	0.30	0.1 U	0.1	0.059	0.30 U	1.0	0.30	0.30 U	1.0	0.30	**0.42** J1	1.0	0.30	**25.7**	1.0	0.590
Total Dissolved Solids (Method 160.1)	---	**608**	60.0	19.4	**469**	10.0	10.0	**565**	60.0	19.4	**379**	30.0	9.7	**407**	30.0	9.7	**247**	5.0	5.00
FIELD PARAMETERS																			
Temperature (°C)	---	16.97	NA	NA	17.47	NA	NA	17.80	NA	NA	17.82	NA	NA	18.90	NA	NA	15.23	NA	NA
Conductivity (uS/cm)	---	1140	NA	NA	808	NA	NA	1341	NA	NA	609	NA	NA	7020	NA	NA	840	NA	NA
Dissolved Oxygen (mg/L)	---	1.10	NA	NA	1.12	NA	NA	0.44	NA	NA	0.32	NA	NA	0.89	NA	NA	1.33	NA	NA
pH (SU)	---	6.59	NA	NA	7.36	NA	NA	8.70	NA	NA	6.77	NA	NA	6.49	NA	NA	5.43	NA	NA
ORP (mV)	---	-119	NA	NA	-57.8	NA	NA	-110.1	NA	NA	-82.2	NA	NA	-120	NA	NA	17.9	NA	NA
Turbidity (NTU)	---	13.4	NA	NA	2.06	NA	NA	3.79	NA	NA	2.82	NA	NA	47.2	NA	NA	7.13	NA	NA
Ferrous Iron (mg/L)	---	3.8	NA	NA	NA	NA	NA	3.2	NA	NA	2.0	NA	NA	2.2	NA	NA	NA	NA	NA

TABLE L-1
GROUNDWATER ANALYTICAL RESULTS
BOEING ISAACSON-THOMPSON
REMEDIAL INVESTIGATION

Location:		IT-MW-4			IT-MW-4			IT-MW-4			IT-MW-5			IT-MW-5			IT-MW-5		
Laboratory Sample ID:	Preliminary	6572511/6572512/UL36A			6692725/6692726/6692727/UZ18C			6790509/6790510/6790511/VJ63D			UB08E/UB08J/UB09E/UB09J/UD89A			6572513/6572514/UL36B			6695720/6695721/6695722/UZ55B		
Laboratory Data Package ID:	Cleanup	1294218/UL36			1316786/UZ18			1335985/VJ63			UB08/UB09/UD89			1294218/UL36			1317333/UZ55		
Sample Date:	Levels	03/08/2012			6/18/2012			9/14/2012			12/13/2011			03/08/2012			6/20/2012		
		Result	Reporting Limit	Detection Limit	Result	Reporting Limit	Detection Limit	Result	Reporting Limit	Detection Limit	Result	Reporting Limit	Detection Limit	Result	Reporting Limit	Detection Limit	Result	Reporting Limit	Detection Limit
VOLATILES (µg/L)																			
Method SW8260C																			
Acetone	110,000	3.0 U	5.0	3.0	3.0 U	5.0	3.0	3.0 U	5.0	3.0	5.0 U	5.0	2.1	3.0 U	5.0	3.0	3.0 U	5.0	3.0
Acrolein	---	5.0 U	25	5.0	5.0 U	25	5.0	5.0 U	25	5.0	5.0 U	5.0	2.5	5.0 U	25	5.0	5.0 U	25	5.0
Acrylonitrile	0.057	1.0 U	5.0	1.0	1.0 U	5.0	1.0	1.0 U	5.0	1.0	1.0 U	1.0	0.60	1.0 U	5.0	1.0	1.0 U	5.0	1.0
Benzene	2	0.1 U	0.2	0.1	0.1 U	0.2	0.1	0.1 U	0.2	0.1	0.2 U	0.2	0.03	0.1 U	0.2	0.1	0.1 U	0.2	0.1
Bromobenzene	---	0.1 U	0.5	0.1	0.1 U	0.5	0.1	0.1 U	0.5	0.1	0.2 U	0.2	0.06	0.1 U	0.5	0.1	0.1 U	0.5	0.1
Bromochloromethane	---	0.1 U	0.5	0.1	0.1 U	0.5	0.1	0.1 U	0.5	0.1	0.2 U	0.2	0.06	0.1 U	0.5	0.1	0.1 U	0.5	0.1
Bromodichloromethane	17	0.1 U	0.5	0.1	0.1 U	0.5	0.1	0.1 U	0.5	0.1	0.2 U	0.2	0.05	0.1 U	0.5	0.1	0.1 U	0.5	0.1
Bromoform	---	0.1 U	0.5	0.1	0.1 U	0.5	0.1	0.1 U	0.5	0.1	0.2 UJ	0.2	0.06	0.1 U	0.5	0.1	0.1 UJ	0.5	0.1
Bromomethane	---	0.1 U	0.5	0.1	0.1 U	0.5	0.1	0.1 U	0.5	0.1	1.0 U	1.0	0.25	0.1 U	0.5	0.1	0.1 U	0.5	0.1
2-Butanone	73,000	1.0 U	5.0	1.0	1.0 U	5.0	1.0	1.0 U	5.0	1.0	5.0 U	5.0	0.81	1.0 U	5.0	1.0	1.0 U	5.0	1.0
n-Butylbenzene	780	0.1 U	0.5	0.1	0.1 U	0.5	0.1	0.1 U	0.5	0.1	0.2 U	0.2	0.02	0.1 U	0.5	0.1	0.1 U	0.5	0.1
sec-Butylbenzene	---	0.1 U	0.5	0.1	0.1 U	0.5	0.1	0.1 U	0.5	0.1	0.2 U	0.2	0.02	0.1 U	0.5	0.1	0.1 U	0.5	0.1
tert-Butylbenzene	---	0.1 U	0.5	0.1	0.1 U	0.5	0.1	0.1 U	0.5	0.1	0.2 U	0.2	0.03	0.1 U	0.5	0.1	0.1 U	0.5	0.1
Carbon Disulfide	3900	0.4 U	0.5	0.4	0.4 U	0.5	0.4	0.4 U	0.5	0.4	0.2 U	0.2	0.04	0.4 U	0.5	0.4	0.4 U	0.5	0.4
Carbon Tetrachloride	0.46	0.1 U	0.2	0.1	0.1 U	0.2	0.1	0.1 U	0.2	0.1	0.2 U	0.2	0.04	0.1 U	0.2	0.1	0.1 U	0.2	0.1
Chlorobenzene	270	0.1 U	0.5	0.1	0.1 U	0.5	0.1	0.1 U	0.5	0.1	0.2 U	0.2	0.02	0.1 U	0.5	0.1	0.1 U	0.5	0.1
Chloroethane	21,000	0.1 U	0.5	0.1	0.1 U	0.5	0.1	0.1 U	0.5	0.1	0.2 U	0.2	0.09	0.1 U	0.5	0.1	0.1 U	0.5	0.1
Chloroform	9.4	0.1 U	0.2	0.1	0.1 U	0.2	0.1	0.1 U	0.2	0.1	**0.2**	0.2	0.03	0.1 U	0.2	0.1	0.1 U	0.2	0.1
Chloromethane	10.3	0.2 U	0.5	0.2	0.2 U	0.5	0.2	0.2 U	0.5	0.2	0.5 U	0.5	0.10	0.2 U	0.5	0.2	0.2 U	0.5	0.2
2-Chlorotoluene	---	0.1 U	0.5	0.1	0.1 U	0.5	0.1	0.1 U	0.5	0.1	0.2 U	0.2	0.02	0.1 U	0.5	0.1	0.1 U	0.5	0.1
4-Chlorotoluene	2600	0.1 U	0.5	0.1	0.1 U	0.5	0.1	0.1 U	0.5	0.1	0.2 U	0.2	0.02	0.1 U	0.5	0.1	0.1 U	0.5	0.1
1,2-Dibromo-3-chloropropane	---	0.2 U	0.5	0.2	0.2 U	0.5	0.2	0.2 U	0.5	0.2	0.5 U	0.5	0.04	0.2 U	0.5	0.2	0.2 U	0.5	0.2
Dibromochloromethane	---	0.1 U	0.5	0.1	0.1 U	0.5	0.1	0.1 U	0.5	0.1	0.2 U	0.2	0.05	0.1 U	0.5	0.1	0.1 U	0.5	0.1
Dibromomethane	---	0.1 U	0.5	0.1	0.1 U	0.5	0.1	0.1 U	0.5	0.1	0.2 U	0.2	0.14	0.1 U	0.5	0.1	0.1 U	0.5	0.1
trans-1,4-Dichloro-2-butene	---	1.0 U	5.0	1.0	1.0 U	5.0	1.0	1.0 U	5.0	1.0	1.0 U	1.0	0.32	1.0 U	5.0	1.0	1.0 UJ	5.0	1.0
1,2-Dichlorobenzene	440	0.1 U	0.5	0.1	0.1 U	0.5	0.1	0.1 U	0.5	0.1	0.2 U	0.2	0.04	0.1 U	0.5	0.1	0.1 U	0.5	0.1
1,3-Dichlorobenzene	960	0.1 U	0.5	0.1	0.1 U	0.5	0.1	0.1 U	0.5	0.1	0.2 U	0.2	0.04	0.1 U	0.5	0.1	0.1 U	0.5	0.1
1,4-Dichlorobenzene	1.7	0.1 U	0.5	0.1	0.1 U	0.5	0.1	0.1 U	0.5	0.1	0.2 U	0.2	0.04	0.1 U	0.5	0.1	0.1 U	0.5	0.1
1,1-Dichloroethane	33	0.1 U	0.5	0.1	0.1 U	0.5	0.1	0.1 U	0.5	0.1	**0.5**	0.2	0.05	**0.1** J1	0.5	0.1	**0.1** J1	0.5	0.1
1,2-Dichloroethane	3.6	0.1 U	0.2	0.1	0.1 U	0.2	0.1	0.1 U	0.2	0.1	0.2 U	0.2	0.07	0.1 U	0.2	0.1	0.1 U	0.2	0.1
1,1-Dichloroethene	3.2	0.1 U	0.2	0.1	0.1 U	0.2	0.1	0.1 U	0.2	0.1	0.2 U	0.2	0.05	0.1 U	0.2	0.1	0.1 U	0.2	0.1
cis-1,2-Dichloroethene	130	0.1 U	0.2	0.1	0.1 U	0.2	0.1	0.1 U	0.2	0.1	0.2 U	0.2	0.04	0.1 U	0.2	0.1	0.1 U	0.2	0.1
trans-1,2-Dichloroethene	940	0.1 U	0.2	0.1	0.1 U	0.2	0.1	0.1 U	0.2	0.1	0.2 U	0.2	0.05	0.1 U	0.2	0.1	0.1 U	0.2	0.1
1,2-Dichloropropane	3.7	0.1 U	0.5	0.1	0.1 U	0.5	0.1	0.1 U	0.5	0.1	0.2 U	0.2	0.04	0.1 U	0.5	0.1	0.1 U	0.5	0.1
1,3-Dichloropropane	---	0.1 U	0.5	0.1	0.1 U	0.5	0.1	0.1 U	0.5	0.1	0.2 U	0.2	0.06	0.1 U	0.5	0.1	0.1 U	0.5	0.1
2,2-Dichloropropane	---	0.1 U	0.5	0.1	0.1 U	0.5	0.1	0.1 U	0.5	0.1	0.2 U	0.2	0.05	0.1 U	0.5	0.1	0.1 U	0.5	0.1
1,1-Dichloropropene	---	0.1 U	0.5	0.1	0.1 U	0.5	0.1	0.1 U	0.5	0.1	0.2 U	0.2	0.03	0.1 U	0.5	0.1	0.1 U	0.5	0.1
cis-1,3-Dichloropropene	---	0.1 U	0.2	0.1	0.1 U	0.2	0.1	0.1 U	0.2	0.1	0.2 U	0.2	0.06	0.1 U	0.2	0.1	0.1 U	0.2	0.1
trans-1,3-Dichloropropene	---	0.1 U	0.2	0.1	0.1 U	0.2	0.1	0.1 U	0.2	0.1	0.2 U	0.2	0.08	0.1 U	0.2	0.1	0.1 U	0.2	0.1
Ethylbenzene	1.7	0.1 U	0.5	0.1	0.1 U	0.5	0.1	0.1 U	0.5	0.1	0.2 U	0.2	0.04	0.1 U	0.5	0.1	0.1 U	0.5	0.1
Ethylene Dibromide	---	0.1 U	0.5	0.1	0.1 U	0.5	0.1	0.1 U	0.5	0.1	0.2 U	0.2	0.08	0.1 U	0.5	0.1	0.1 U	0.5	0.1
Hexachlorobutadiene	---	0.1 U	0.5	0.1	0.1 U	0.5	0.1	0.1 U	0.5	0.1	0.5 U	0.5	0.07	0.1 U	0.5	0.1	0.1 U	0.5	0.1
2-Hexanone	3200	1.0 U	5.0	1.0	1.0 U	5.0	1.0	1.0 U	5.0	1.0	5.0 U	5.0	0.90	1.0 U	5.0	1.0	1.0 U	5.0	1.0
Isopropylbenzene	270	0.1 U	0.5	0.1	0.1 U	0.5	0.1	0.1 U	0.5	0.1	0.2 U	0.2	0.02	0.1 U	0.5	0.1	0.1 U	0.5	0.1
4-Isopropyltoluene	---	0.1 U	0.5	0.1	0.1 U	0.5	0.1	0.1 U	0.5	0.1	0.2 U	0.2	0.03	0.1 U	0.5	0.1	0.1 U	0.5	0.1
Methyl Iodide	---	0.1 U	0.5	0.1	0.1 UJ	0.5	0.1	0.1 U	0.5	0.1	1.0 U	1.0	0.23	0.1 U	0.5	0.1	0.1 U	0.5	0.1
4-Methyl-2-Pentanone (MIBK)	19,000	1.0 U	5.0	1.0	1.0 U	5.0	1.0	1.0 U	5.0	1.0	5.0 U	5.0	0.97	1.0 U	5.0	1.0	1.0 U	5.0	1.0
Methylene Chloride	230	0.2 U	0.5	0.2	0.2 U	0.5	0.2	0.2 U	0.5	0.2	0.5 U	0.5	0.48	0.2 U	0.5	0.2	0.2 U	0.5	0.2
Naphthalene	26	0.1 U	0.5	0.1	0.1 U	0.5	0.1	0.1 U	0.5	0.1	0.5 U	0.5	0.12	0.1 U	0.5	0.1	0.1 U	0.5	0.1
n-Propylbenzene	530	0.1 U	0.5	0.1	0.1 U	0.5	0.1	0.1 U	0.5	0.1	0.2 U	0.2	0.02	0.1 U	0.5	0.1	0.1 U	0.5	0.1
Styrene	77,000	0.1 U	0.5	0.1	0.1 U	0.5	0.1	0.1 U	0.5	0.1	0.2 U	0.2	0.04	0.1 U	0.5	0.1	0.1 U	0.5	0.1
1,1,1,2-Tetrachloroethane	---	0.1 U	0.5	0.1	0.1 U	0.5	0.1	0.1 U	0.5	0.1	0.2 U	0.2	0.04	0.1 U	0.5	0.1	0.1 U	0.5	0.1
1,1,2,2-Tetrachloroethane	0.33	0.1 U	0.2	0.1	0.1 U	0.2	0.1	0.1 U	0.2	0.1	0.2 U	0.2	0.06	0.1 U	0.2	0.1	0.1 U	0.2	0.1
Tetrachloroethene	3.3	0.1 U	0.2	0.1	0.1 U	0.2	0.1	0.1 U	0.2	0.1	0.2 U	0.2	0.05	0.1 U	0.2	0.1	0.1 U	0.2	0.1
Toluene	1300	0.1 U	0.2	0.1	0.1 U	0.2	0.1	0.1 U	0.2	0.1	0.2 U	0.2	0.04	0.1 U	0.2	0.1	0.1 U	0.2	0.1
1,1,2-Trichloro-1,2,2-trifuoroethane	59,000	0.2 U	0.5	0.2	0.2 U	0.5	0.2	0.2 U	0.5	0.2	0.2 U	0.2	0.04	0.2 U	0.5	0.2	0.2 U	0.5	0.2
1,2,3-Trichlorobenzene	---	0.1 U	0.5	0.1	0.1 U	0.5	0.1	0.1 U	0.5	0.1	0.5 U	0.5	0.11	0.1 U	0.5	0.1	0.1 U	0.5	0.1

TABLE L-1
GROUNDWATER ANALYTICAL RESULTS
BOEING ISAACSON-THOMPSON
REMEDIAL INVESTIGATION

Location:		IT-MW-4			IT-MW-4			IT-MW-4			IT-MW-5			IT-MW-5			IT-MW-5		
Laboratory Sample ID:	Preliminary	6572511/6572512/UL36A			6692725/6692726/6692727/UZ18C			6790509/6790510/6790511/VJ63D			UB08E/UB08J/UB09E/UB09J/UD89A			6572513/6572514/UL36B			6695720/6695721/6695722/UZ55B		
Laboratory Data Package ID:	Cleanup	1294218/UL36			1316786/UZ18			1335985/VJ63			UB08/UB09/UD89			1294218/UL36			1317333/UZ55		
Sample Date:	Levels	03/08/2012			6/18/2012			9/14/2012			12/13/2011			03/08/2012			6/20/2012		
		Result	Reporting Limit	Detection Limit	Result	Reporting Limit	Detection Limit	Result	Reporting Limit	Detection Limit	Result	Reporting Limit	Detection Limit	Result	Reporting Limit	Detection Limit	Result	Reporting Limit	Detection Limit
1,2,4-Trichlorobenzene	1.13	0.1 U	0.5	0.1	0.1 U	0.5	0.1	0.1 U	0.5	0.1	0.5 U	0.5	0.11	0.1 U	0.5	0.1	0.1 U	0.5	0.1
1,1,1-Trichloroethane	46,000	0.1 U	0.5	0.1	0.1 U	0.5	0.1	0.1 U	0.5	0.1	**2.4**	0.2	0.04	**2.2**	0.5	0.1	**1.9**	0.5	0.1
1,1,2-Trichloroethane	2.3	0.1 U	0.2	0.1	0.1 U	0.2	0.1	0.1 U	0.2	0.1	0.2 U	0.2	0.13	0.1 U	0.2	0.1	0.1 U	0.2	0.1
Trichloroethene	1.4	0.1 U	0.2	0.1	0.1 U	0.2	0.1	0.1 U	0.2	0.1	0.2 U	0.2	0.05	0.1 U	0.2	0.1	0.1 U	0.2	0.1
Trichlorofluoromethane	6900	0.1 U	0.5	0.1	0.1 U	0.5	0.1	0.1 U	0.5	0.1	0.2 U	0.2	0.04	0.1 U	0.5	0.1	0.1 U	0.5	0.1
1,2,3-Trichloropropane	---	0.3 U	1.0	0.3	0.3 U	1.0	0.3	0.3 U	1.0	0.3	0.5 U	0.5	0.13	0.3 U	1.0	0.3	0.3 U	1.0	0.3
1,2,4-Trimethylbenzene	303	0.1 U	0.5	0.1	0.1 U	0.5	0.1	0.1 U	0.5	0.1	0.2 U	0.2	0.02	0.1 U	0.5	0.1	0.1 U	0.5	0.1
1,3,5-Trimethylbenzene	303	0.1 U	0.5	0.1	0.1 U	0.5	0.1	0.1 U	0.5	0.1	0.2 U	0.2	0.02	0.1 U	0.5	0.1	0.1 U	0.5	0.1
Vinyl Acetate	---	0.2 U	0.5	0.2	0.2 U	0.5	0.2	0.2 U	0.5	0.2	1.0 U	1.0	0.07	0.2 U	0.5	0.2	0.2 U	0.5	0.2
Vinyl Chloride	0.53	0.1 U	0.2	0.1	0.1 U	0.2	0.1	0.1 U	0.2	0.1	0.2 U	0.2	0.06	0.1 U	0.2	0.1	0.1 U	0.2	0.1
m,p-Xylene	1300	0.1 U	0.5	0.1	0.1 U	0.5	0.1	0.1 U	0.5	0.1	0.4 U	0.4	0.05	0.1 U	0.5	0.1	0.1 U	0.5	0.1
o-Xylene	1600	0.1 U	0.5	0.1	0.1 U	0.5	0.1	0.1 U	0.5	0.1	0.2 U	0.2	0.04	0.1 U	0.5	0.1	0.1 U	0.5	0.1
2-Chloroethylvinylether	---	NA	NA	NA	NA	NA	NA	NA	NA	NA	1.0 U	1.0	0.25	NA	NA	NA	NA	NA	NA
Bromoethane	---	NA	NA	NA	NA	NA	NA	NA	NA	NA	0.2 U	0.2	0.04	NA	NA	NA	NA	NA	NA
VOLATILES (µg/L)																			
Method SW8260C-SIM																			
Tetrachloroethene	3.3	0.010 U	0.020	0.010	0.043 U	0.020	0.010	0.010 U	0.020	0.010	0.020 U	0.020	0.0036	0.010 U	0.020	0.010	0.010 U	0.020	0.010
Vinyl Chloride	0.53	**0.088**	0.020	0.010	0.010 U	0.020	0.010	0.010 U	0.020	0.010	0.020 U	0.020	0.0022	0.010 U	0.020	0.010	0.010 U	0.020	0.010
Acrylonitrile	0.057	NA	NA	NA	NA	NA	NA	NA	NA	NA	0.050 U	0.050	0.0158	NA	NA	NA	NA	NA	NA
SEMIVOLATILES (µg/L)																			
Method SW8270D																			
Acenaphthene	120	0.09 U	0.5	0.09	0.1 U	0.5	0.1	0.1 U	0.5	0.1	1.0 U	1.0	0.55	0.1 U	0.5	0.1	0.1 U	0.5	0.1
Acenaphthylene	---	0.09 U	0.5	0.09	0.1 U	0.5	0.1	0.1 U	0.5	0.1	1.0 U	1.0	0.48	0.1 U	0.5	0.1	0.1 U	0.5	0.1
Anthracene	200	0.09 U	0.5	0.09	0.1 U	0.5	0.1	0.1 U	0.5	0.1	1.0 U	1.0	0.53	0.1 U	0.5	0.1	0.1 U	0.5	0.1
Benzo(a)anthracene	0.0018	0.09 U	0.5	0.09	0.1 U	0.5	0.1	0.1 U	0.5	0.1	1.0 U	1.0	0.52	0.1 U	0.5	0.1	0.1 U	0.5	0.1
Benzo(a)pyrene	0.00018	0.09 U	0.5	0.09	0.1 U	0.5	0.1	0.1 U	0.5	0.1	1.0 U	1.0	0.48	0.1 U	0.5	0.1	0.1 U	0.5	0.1
Benzo(b)fluoranthene	0.0018	0.09 U	0.5	0.09	0.1 U	0.5	0.1	0.1 U	0.5	0.1	NA	NA	NA	0.1 U	0.5	0.1	0.1 U	0.5	0.1
Benzo(g,h,i)perylene	---	0.09 U	0.5	0.09	0.1 U	0.5	0.1	0.1 U	0.5	0.1	1.0 U	1.0	0.55	0.1 U	0.5	0.1	0.1 U	0.5	0.1
Benzo(k)fluoranthene	0.0018	0.09 U	0.5	0.09	0.1 U	0.5	0.1	0.1 U	0.5	0.1	NA	NA	NA	0.1 U	0.5	0.1	0.1 U	0.5	0.1
Total Benzofluoranthenes	0.0018	NA	NA	NA	NA	NA	NA	NA	NA	NA	1.0 U	1.0	0.48	NA	NA	NA	NA	NA	NA
Benzoic Acid	2,240	6 UJ	14	6	6 U	16	6	6 U	14	6	10 UJ	10	5.1	6 UJ	14	6	6 U	14	6
Benzyl Alcohol	182	5 U	14	5	5 U	16	5	5 U	14	5	5.0 U	5.0	2.0	5 U	14	5	5 U	14	5
4-Bromophenyl-phenylether	---	0.5 U	0.9	0.5	0.5 U	1	0.5	0.5 U	1	0.5	1.0 U	1.0	0.42	0.5 U	1	0.5	0.5 U	1	0.5
Butylbenzylphthalate	0.41	2 U	5	2	2 U	5	2	2 U	5	2	1.0 U	1.0	0.56	2 U	5	2	2 U	5	2
Di-n-Butylphthalate	47	2 U	5	2	2 U	5	2	2 U	5	2	1.0 U	1.0	0.54	2 U	5	2	2 U	5	2
Carbazole	---	0.5 U	0.9	0.5	0.5 U	1	0.5	0.5 U	1	0.5	1.0 U	1.0	0.31	0.5 U	1	0.5	0.5 U	1	0.5
4-Chloro-3-methylphenol	3700	0.5 U	0.9	0.5	0.5 U	1	0.5	0.5 U	1	0.5	5.0 U	5.0	2.4	0.5 U	1	0.5	0.5 U	1	0.5
4-Chloroaniline	---	0.5 U	0.9	0.5	0.5 U	1	0.5	0.5 U	1	0.5	5.0 U	5.0	2.6	0.5 U	1	0.5	0.5 U	1	0.5
bis(2-Chloroethoxy) Methane	---	0.5 U	0.9	0.5	0.5 U	1	0.5	0.5 U	1	0.5	1.0 U	1.0	0.56	0.5 U	1	0.5	0.5 U	1	0.5
Bis-(2-Chloroethyl) Ether	---	0.5 U	0.9	0.5	0.5 U	1	0.5	0.5 U	1	0.5	1.0 U	1.0	0.58	0.5 U	1	0.5	0.5 U	1	0.5
2-Chloronaphthalene	---	0.4 U	0.9	0.4	0.4 U	1	0.4	0.4 U	1	0.4	1.0 U	1.0	0.48	0.4 U	1	0.4	0.4 U	1	0.4
2-Chlorophenol	---	0.5 U	0.9	0.5	0.5 U	1	0.5	0.5 U	1	0.5	1.0 U	1.0	0.53	0.5 U	1	0.5	0.5 U	1	0.5
4-Chlorophenyl-phenylether	---	0.5 U	0.9	0.5	0.5 U	1	0.5	0.5 U	1	0.5	1.0 U	1.0	0.45	0.5 U	1	0.5	0.5 U	1	0.5
2,2'-Oxybis(1-Chloropropane)	---	0.5 U	0.9	0.5	0.5 U	1	0.5	0.5 U	1	0.5	1.0 U	1.0	0.62	0.5 U	1	0.5	0.5 U	1	0.5
Chrysene	0.018	0.1 U	0.5	0.1	0.1 U	0.5	0.1	0.1 U	0.5	0.1	1.0 U	1.0	0.55	0.1 U	0.5	0.1	0.1 U	0.5	0.1
Dibenz(a,h)anthracene	0.0018	0.1 U	0.5	0.1	0.1 U	0.5	0.1	0.1 U	0.5	0.1	1.0 U	1.0	0.48	0.1 U	0.5	0.1	0.1 U	0.5	0.1
Dibenzofuran	1.3	0.5 U	0.9	0.5	0.5 U	1	0.5	0.5 U	1	0.5	1.0 U	1.0	0.48	0.5 U	1	0.5	0.5 U	1	0.5
1,2-Dichlorobenzene	440	0.5 U	0.9	0.5	0.5 U	1	0.5	0.5 U	1	0.5	1.0 U	1.0	0.36	0.5 U	1	0.5	0.5 U	1	0.5
1,3-Dichlorobenzene	---	0.5 U	0.9	0.5	0.5 U	1	0.5	0.5 U	1	0.5	1.0 U	1.0	0.36	0.5 U	1	0.5	0.5 U	1	0.5
1,4-Dichlorobenzene	1.7	0.5 U	0.9	0.5	0.5 U	1	0.5	0.5 U	1	0.5	1.0 U	1.0	0.40	0.5 U	1	0.5	0.5 U	1	0.5
3,3'-Dichlorobenzidine	---	2 U	5	2	2 U	5	2	2 U	5	2	5.0 U	5.0	1.5	2 U	5	2	2 U	5	2
2,4-Dichlorophenol	---	0.5 U	0.9	0.5	0.5 U	1	0.5	0.5 U	1	0.5	5.0 U	5.0	2.6	0.5 U	1	0.5	0.5 U	1	0.5
Diethylphthalate	4,236	2 U	5	2	2 U	5	2	2 U	5	2	1.0 U	1.0	0.58	2 U	5	2	2 U	5	2
2,4-Dimethylphenol	660	0.5 U	0.9	0.5	0.5 U	1	0.5	0.5 U	1	0.5	1.0 U	1.0	0.36	0.5 U	1	0.5	0.5 U	1	0.5
Dimethylphthalate	1,100,000	2 U	5	2	2 U	5	2	2 U	5	2	1.0 U	1.0	0.53	2 U	5	2	2 U	5	2
4,6-Dinitro-2-Methylphenol	---	5 U	14	5	5 U	16	5	5 U	14	5	10 U	10	3.1	5 U	14	5	5 U	14	5
2,4-Dinitrophenol	---	10 U	28	10	11 U	32	11	10 U	29	10	10 UJ	10	3.5	10 U	29	10	10 U	29	10
2,4-Dinitrotoluene	---	1 U	5	1	1 U	5	1	1 U	5	1	5.0 U	5.0	2.5	1 U	5	1	1 U	5	1
2,6-Dinitrotoluene	---	0.5 U	0.9	0.5	0.5 U	1	0.5	0.5 U	1	0.5	5.0 U	5.0	2.4	0.5 U	1	0.5	0.5 U	1	0.5
bis(2-Ethylhexyl)phthalate	1.2	2 U	5	2	2 U	5	2	2 U	5	2	1.0 U	1.0	1.9	2 U	5	2	2 U	5	2

TABLE L-1
GROUNDWATER ANALYTICAL RESULTS
BOEING ISAACSON-THOMPSON
REMEDIAL INVESTIGATION

Location:		IT-MW-4			IT-MW-4			IT-MW-4			IT-MW-5			IT-MW-5			IT-MW-5		
Laboratory Sample ID:	Preliminary	6572511/6572512/UL36A			6692725/6692726/6692727/UZ18C			6790509/6790510/6790511/VJ63D			UB08E/UB08J/UB09E/UB09J/UD89A			6572513/6572514/UL36B			6695720/6695721/6695722/UZ55B		
Laboratory Data Package ID:	Cleanup	1294218/UL36			1316786/UZ18			1335985/VJ63			UB08/UB09/UD89			1294218/UL36			1317333/UZ55		
Sample Date:	Levels	03/08/2012			6/18/2012			9/14/2012			12/13/2011			03/08/2012			6/20/2012		
		Result	Reporting Limit	Detection Limit	Result	Reporting Limit	Detection Limit	Result	Reporting Limit	Detection Limit	Result	Reporting Limit	Detection Limit	Result	Reporting Limit	Detection Limit	Result	Reporting Limit	Detection Limit
Fluoranthene	11	0.1 U	0.5	0.1	0.1 U	0.5	0.1	0.1 U	0.5	0.1	1.0 U	1.0	0.52	0.1 U	0.5	0.1	0.1 U	0.5	0.1
Fluorene	45	0.1 U	0.5	0.1	0.1 U	0.5	0.1	0.1 U	0.5	0.1	1.0 U	1.0	0.56	0.1 U	0.5	0.1	0.1 U	0.5	0.1
Hexachlorobenzene	---	0.1 U	0.5	0.1	0.1 U	0.5	0.1	0.1 U	0.5	0.1	1.0 U	1.0	0.47	0.1 U	0.5	0.1	0.1 U	0.5	0.1
Hexachlorobutadiene	---	0.5 U	0.9	0.5	0.5 U	1	0.5	0.5 U	1	0.5	1.0 U	1.0	0.31	0.5 U	1	0.5	0.5 U	1	0.5
Hexachlorocyclopentadiene	---	5 U	14	5	5 U	16	5	5 U	14	5	5.0 U	5.0	1.2	5 U	14	5	5 U	14	5
Hexachloroethane	---	1 U	5	1	1 U	5	1	1 U	5	1	1.0 U	1.0	0.35	1 U	5	1	1 U	5	1
Indeno(1,2,3-cd)pyrene	0.0018	0.1 U	0.5	0.1	0.1 U	0.5	0.1	0.1 U	0.5	0.1	1.0 U	1.0	0.48	0.1 U	0.5	0.1	0.1 U	0.5	0.1
Isophorone	---	0.5 U	0.9	0.5	0.5 U	1	0.5	0.5 U	1	0.5	1.0 U	1.0	0.48	0.5 U	1	0.5	0.5 U	1	0.5
1-Methylnaphthalene	2.3	0.1 U	0.5	0.1	0.1 U	0.5	0.1	0.1 U	0.5	0.1	1.0 U	1.0	0.48	0.1 U	0.5	0.1	0.1 U	0.5	0.1
2-Methylnaphthalene	64	0.1 U	0.5	0.1	0.1 U	0.5	0.1	0.1 U	0.5	0.1	1.0 U	1.0	0.48	0.1 U	0.5	0.1	0.1 U	0.5	0.1
2-Methylphenol	3100	0.5 U	0.9	0.5	0.5 U	1	0.5	0.5 U	1	0.5	1.0 U	1.0	0.53	0.5 U	1	0.5	0.5 U	1	0.5
4-Methylphenol	330	0.5 U	0.9	0.5	0.5 U	1	0.5	0.5 U	1	0.5	1.0 U	1.0	0.52	0.5 U	1	0.5	0.5 U	1	0.5
Naphthalene	26	**0.1** J1	0.5	0.1	0.1 U	0.5	0.1	0.1 U	0.5	0.1	1.0 U	1.0	0.52	0.1 U	0.5	0.1	0.1 U	0.5	0.1
2-Nitroaniline	---	0.5 U	0.9	0.5	0.5 U	1	0.5	0.5 U	1	0.5	5.0 U	5.0	2.6	0.5 U	1	0.5	0.5 U	1	0.5
3-Nitroaniline	---	0.5 U	0.9	0.5	0.5 U	1	0.5	0.5 U	1	0.5	5.0 U	5.0	2.3	0.5 U	1	0.5	0.5 U	1	0.5
4-Nitroaniline	---	0.5 U	0.9	0.5	0.5 U	1	0.5	0.5 U	1	0.5	5.0 U	5.0	2.2	0.5 U	1	0.5	0.5 U	1	0.5
Nitrobenzene	---	0.5 U	0.9	0.5	0.5 U	1	0.5	0.5 U	1	0.5	1.0 U	1.0	0.58	0.5 U	1	0.5	0.5 U	1	0.5
2-Nitrophenol	---	0.5 U	0.9	0.5	0.5 U	1	0.5	0.5 U	1	0.5	5.0 U	5.0	2.0	0.5 U	1	0.5	0.5 U	1	0.5
4-Nitrophenol	---	10 U	29	10	11 U	32	11	10 U	29	10	5.0 U	5.0	2.6	10 U	29	10	10 U	29	10
N-Nitroso-Di-N-Propylamine	---	0.5 U	0.9	0.5	0.5 U	1	0.5	0.5 U	1	0.5	1.0 U	1.0	0.56	0.5 U	1	0.5	0.5 U	1	0.5
N-Nitrosodiphenylamine	1.96	0.5 U	0.9	0.5	0.5 U	1	0.5	0.5 U	1	0.5	1.0 U	1.0	0.46	0.5 U	1	0.5	0.5 U	1	0.5
Di-n-Octyl phthalate	---	2 U	5	2	2 U	5	2	2 U	5	2	1.0 U	1.0	0.51	2 U	5	2	2 U	5	2
Pentachlorophenol	---	1 U	5	1	1 U	5	1	1 U	5	1	5.0 UJ	5.0	2.4	1 U	5	1	1 U	5	1
Phenanthrene	---	0.1 U	0.5	0.1	0.1 U	0.5	0.1	0.1 U	0.5	0.1	1.0 U	1.0	0.56	0.1 U	0.5	0.1	0.1 U	0.5	0.1
Phenol	41,000	0.5 U	0.9	0.5	0.5 U	1	0.5	0.5 U	1	0.5	1.0 U	1.0	0.52	0.5 U	1	0.5	0.5 U	1	0.5
Pyrene	9.8	0.1 U	0.5	0.1	0.1 UJ	0.5	0.1	0.1 U	0.5	0.1	1.0 U	1.0	0.55	0.1 U	0.5	0.1	0.1 U	0.5	0.1
1,2,4-Trichlorobenzene	1.13	0.5 U	0.9	0.5	0.5 U	1	0.5	0.5 U	1	0.5	1.0 U	1.0	0.38	0.5 U	1	0.5	0.5 U	1	0.5
2,4,5-Trichlorophenol	---	0.5 U	0.9	0.5	0.5 U	1	0.5	0.5 U	1	0.5	5.0 U	5.0	2.2	0.5 U	1	0.5	0.5 U	1	0.5
2,4,6-Trichlorophenol	---	0.5 U	0.9	0.5	0.5 U	1	0.5	0.5 U	1	0.5	5.0 U	5.0	2.4	0.5 U	1	0.5	0.5 U	1	0.5
cPAHs (µg/L)																			
Method SW8270D-SIM																			
Benzo(a)anthracene	0.0018	0.0047 U	0.0095	0.0047	0.0054 U	0.011	0.0054	0.0048 U	0.0095	0.0048	0.010 U	0.010	0.0063	0.0054 U	0.011	0.0054	0.0048 U	0.0095	0.0048
Benzo(a)pyrene	0.00018	0.0047 U	0.0095	0.0047	0.0054 U	0.011	0.0054	0.0048 U	0.0095	0.0048	0.010 U	0.010	0.0048	0.0054 U	0.011	0.0054	0.0048 U	0.0095	0.0048
Benzo(b)fluoranthene	0.0018	0.0047 U	0.0095	0.0047	0.0054 U	0.011	0.0054	0.0048 U	0.0095	0.0048	NA	NA	NA	**0.0070** J1	0.011	0.0054	0.0048 U	0.0095	0.0048
Benzo(k)fluoranthene	0.0018	0.0047 U	0.0095	0.0047	0.0054 U	0.011	0.0054	0.0048 U	0.0095	0.0048	NA	NA	NA	0.0054 U	0.011	0.0054	0.0048 U	0.0095	0.0048
Total Benzofluoranthenes	0.0018	NA	NA	NA	NA	NA	NA	NA	NA	NA	0.020 U	0.020	0.0099	NA	NA	NA	NA	NA	NA
Chrysene	0.018	0.0047 U	0.0095	0.0047	0.0054 U	0.011	0.0054	0.0048 U	0.0095	0.0048	0.010 U	0.010	0.0046	0.0054 U	0.011	0.0054	0.0048 U	0.0095	0.0048
Dibenz(a,h)anthracene	0.0018	0.0038 U	0.0095	0.0038	0.0043 U	0.011	0.0043	0.0038 U	0.0095	0.0038	0.010 U	0.010	0.0048	0.0043 U	0.011	0.0043	0.0038 U	0.0095	0.0038
Indeno(1,2,3-cd)pyrene	0.0018	0.0038 U	0.0095	0.0038	0.0043 U	0.011	0.0043	0.0038 U	0.0095	0.0038	0.010 U	0.010	0.0046	0.0043 U	0.011	0.0043	0.0038 U	0.0095	0.0038
Pyrene	9.8	0.0095 U	0.047	0.0095	0.011 U	0.054	0.011	0.0095 U	0.048	0.0095	NA	NA	NA	0.011 U	0.054	0.011	0.0095 U	0.048	0.0095
cPAH TEQ	0.00018	ND	NA	NA	ND	NA	NA	ND	NA	NA	ND	NA	NA	**0.0007** J	NA	NA	ND	NA	NA
PCBs (µg/L)																			
Method SW8082																			
Aroclor 1016	0.000023	0.0057 U	0.0095	0.0057	0.0059 U	0.0099	0.0059	0.0059 U	0.0098	0.0059	0.010 U	0.010	0.0025	0.0058 U	0.0096	0.0058	0.0058 U	0.0097	0.0058
Aroclor 1221	---	0.0057 U	0.0095	0.0057	0.0059 U	0.0099	0.0059	0.0059 U	0.0098	0.0059	0.010 U	0.010	0.0028	0.0058 U	0.0096	0.0058	0.0058 U	0.0097	0.0058
Aroclor 1232	---	0.0066 U	0.0095	0.0066	0.0069 U	0.0099	0.0069	0.0068 U	0.0098	0.0068	0.010 U	0.010	0.0028	0.0067 U	0.0096	0.0067	0.0068 U	0.0097	0.0068
Aroclor 1242	0.000023	0.0057 U	0.0095	0.0057	0.0059 U	0.0099	0.0059	0.0059 U	0.0098	0.0059	0.010 U	0.010	0.0028	0.0058 U	0.0096	0.0058	0.0058 U	0.0097	0.0058
Aroclor 1248	0.000023	0.0047 U	0.0095	0.0047	0.0049 U	0.0099	0.0049	0.0049 U	0.0098	0.0049	0.010 U	0.010	0.0028	0.0048 U	0.0096	0.0048	0.0049 U	0.0097	0.0049
Aroclor 1254	0.0000055	0.0047 U	0.0095	0.0047	0.0049 U	0.0099	0.0049	0.0049 U	0.0098	0.0049	0.010 U	0.010	0.0028	0.0048 U	0.0096	0.0048	0.0049 U	0.0097	0.0049
Aroclor 1260	0.000023	0.0047 U	0.0095	0.0047	0.0049 U	0.0099	0.0049	0.0049 U	0.0098	0.0049	0.010 U	0.010	0.0028	0.0048 U	0.0096	0.0048	0.0049 U	0.0097	0.0049
Total PCBs	0.000023	ND	NA	NA	ND	NA	NA	ND	NA	NA	ND	NA	NA	ND	NA	NA	ND	NA	NA

TABLE L-1
GROUNDWATER ANALYTICAL RESULTS
BOEING ISAACSON-THOMPSON
REMEDIAL INVESTIGATION

Location:		IT-MW-4			IT-MW-4			IT-MW-4			IT-MW-5			IT-MW-5			IT-MW-5		
Laboratory Sample ID:	Preliminary	6572511/6572512/UL36A			6692725/6692726/6692727/UZ18C			6790509/6790510/6790511/VJ63D			UB08E/UB08J/UB09E/UB09J/UD89A			6572513/6572514/UL36B			6695720/6695721/6695722/UZ55B		
Laboratory Data Package ID:	Cleanup	1294218/UL36			1316786/UZ18			1335985/VJ63			UB08/UB09/UD89			1294218/UL36			1317333/UZ55		
Sample Date:	Levels	03/08/2012			6/18/2012			9/14/2012			12/13/2011			03/08/2012			6/20/2012		
		Result	Reporting Limit	Detection Limit	Result	Reporting Limit	Detection Limit	Result	Reporting Limit	Detection Limit	Result	Reporting Limit	Detection Limit	Result	Reporting Limit	Detection Limit	Result	Reporting Limit	Detection Limit
TOTAL PETROLEUM HYDROCARBONS (mg/L)																			
NWTPH-Dx																			
Diesel-Range Organics	0.5	0.067 U	0.24	0.067	0.028 U	0.095	0.028	0.030 U	0.100	0.030	0.10 U	0.10	0.022	0.067 U	0.24	0.067	0.029 U	0.098	0.029
Oil-Range Organics	0.5	0.95 U	2.9	0.95	0.066 U	0.240	0.066	0.070 U	0.250	0.070	0.20 U	0.20	0.044	0.95 U	2.9	0.95	0.068 U	0.240	0.068
NWTPH-G																			
Gasoline-Range Organics	1.0/0.8	0.05 U	0.25	0.05	0.05 U	0.25	0.05	0.05 U	0.25	0.05	0.25 U	0.25	0.06	0.05 U	0.25	0.05	0.05 U	0.25	0.05
TOTAL METALS (µg/L)																			
Method 200.8																			
Antimony	---	0.42 U	1.0	0.42	0.33 U	1.0	0.33	0.33 U	1.0	0.33	0.2 U	0.2	0.010	0.42 U	1.0	0.42	0.42 U	1.0	0.42
Arsenic	---	**1.1** J1	2.0	0.95	**4.6**	2.0	0.20	**2.0** J1	2.0	0.40	0.6U/**0.4***	0.2	0.048	0.95 U	2.0	0.95	0.95 U	2.0	0.95
Barium	---	**4.6**	2.0	0.69	**2.8**	2.0	0.41	**2.9**	2.0	0.41	**130**	0.5	0.020	**80.3**	2.0	0.69	**40.7**	2.0	0.69
Beryllium	---	0.13 U	0.50	0.13	0.025 U	0.50	0.025	0.025 U	0.50	0.025	0.2 U	0.2	0.021	0.13 U	0.50	0.13	0.13 U	0.50	0.13
Cadmium	---	0.20 U	0.50	0.20	0.048 U	0.50	0.048	0.082 U	0.50	0.082	0.1 U	0.1	0.010	0.20 U	0.50	0.20	0.20 U	0.50	0.20
Chromium	---	**0.84** J1	2.0	0.60	**2.1**	2.0	0.10	**1.8** J1	2.0	0.50	0.5 U	0.5	0.045	0.60 U	2.0	0.60	0.60 U	2.0	0.60
Copper	---	0.38 U	2.0	0.38	**0.34** J1	2.0	0.15	0.40 U	2.0	0.40	**1.8**	0.5	0.158	**1.1** J1	2.0	0.38	**1.3** J1	2.0	0.38
Lead	---	0.080 U	1.0	0.080	0.034 U	1.0	0.034	0.034 U	1.0	0.034	0.1 U	0.1	0.046	0.080 U	1.0	0.080	0.080 U	1.0	0.080
Nickel	---	**0.75** J1	2.0	0.50	**1.4** J1	2.0	0.13	**0.81** J1	2.0	0.35	**10.2**	0.5	0.079	**6.9**	2.0	0.50	**2.6**	2.0	0.50
Selenium	---	0.27 U	2.0	0.27	0.18 U	2.0	0.18	0.50 U	2.0	0.50	**0.6**	0.5	0.127	**0.53** J1	2.0	0.27	0.27 U	2.0	0.27
Silver	---	0.098 U	0.50	0.098	0.10 U	0.50	0.10	0.10 U	0.50	0.10	0.2 U	0.2	0.008	0.098 U	0.50	0.098	0.098 U	0.50	0.098
Thallium	---	0.15 U	0.50	0.15	0.029 U	0.50	0.029	0.15 U	0.50	0.15	0.2 U	0.2	0.004	0.15 U	0.50	0.15	0.15 U	0.50	0.15
Zinc	---	4.0 U	15.0	4.0	**1.2** J1	15.0	1.1	**1.4** J1	15.0	1.1	**31**	4	0.50	**14.8** J1	15.0	4.0	**7.4** J1	15.0	4.0
Method SW7196A (mg/L)																			
Chromium VI	0.00058	0.010 U	0.010	0.00300	0.010 U	0.010	0.00300	0.010 U	0.010	0.00300	0.010 U	0.010	0.00300	0.010 U	0.010	0.00300	0.010 U	0.010	0.00300
Method SW7470A/EPA 1631E (ng/L)																			
Mercury	12	**0.575**	5.00	1.60	**1.56**	0.500	0.160	**1.16**	0.500	0.160	20.0 U	20.0	2.60	**0.397** J1	5.00	1.60	**0.772**	0.500	0.160
DISSOLVED METALS (µg/L)																			
Methods 200.8/SW7196A																			
Antimony	150	0.42 U	1.0	0.42	0.33 U	1.0	0.33	0.33 U	1.0	0.33	0.2 U	0.2	0.010	0.42 U	1.0	0.42	0.42 U	1.0	0.42
Arsenic	8	**1.4** J1	2.0	0.95	**3.0**	2.0	0.20	**1.4** J1	2.0	0.40	**0.5**	0.2	0.048	0.95 U	2.0	0.95	0.95 U	2.0	0.95
Barium	770	**5.0**	2.0	0.69	**3.2**	2.0	0.41	**2.9**	2.0	0.41	**137**	0.5	0.020	**83.7**	2.0	0.69	**40.3**	2.0	0.69
Beryllium	12	0.13 U	0.50	0.13	0.025 U	0.50	0.025	0.025 U	0.50	0.025	0.2 U	0.2	0.021	0.13 U	0.50	0.13	0.13 U	0.50	0.13
Cadmium	0.25	0.20 U	0.50	0.20	0.048 U	0.50	0.048	0.082 U	0.50	0.082	0.1 U	0.1	0.010	0.20 U	0.50	0.20	0.20 U	0.50	0.20
Chromium	74	**0.93** J1	2.0	0.60	**2.0**	2.0	0.10	**2.0**	2.0	0.50	0.5 U	0.5	0.045	0.60 U	2.0	0.60	0.60 U	2.0	0.60
Copper	8	0.38 U	2.0	0.38	**0.30** J1	2.0	0.15	0.40 U	2.0	0.40	**1.7**	0.5	0.158	**1.4** J1	2.0	0.38	**1.5** J1	2.0	0.38
Lead	2.5	0.080 U	1.0	0.080	0.034 U	1.0	0.034	0.034 U	1.0	0.034	0.1 U	0.1	0.046	0.080 U	1.0	0.080	0.080 U	1.0	0.080
Nickel	8.2	**0.64** J1	2.0	0.50	**1.1** J1	2.0	0.13	**0.42** J1	2.0	0.35	**10.3**	0.5	0.079	**7.9**	2.0	0.50	**2.5**	2.0	0.50
Selenium	5	0.27 U	2.0	0.27	**0.20** J1	2.0	0.18	0.50 U	2.0	0.50	**0.7**	0.5	0.127	**0.57** J1	2.0	0.27	0.27 U	2.0	0.27
Silver	22	0.098 U	0.50	0.098	0.10 U	0.50	0.10	0.10 U	0.50	0.10	0.2 U	0.2	0.008	0.098 U	0.50	0.098	0.098 U	0.50	0.098
Thallium	0.47	0.15 U	0.50	0.15	0.029 U	0.50	0.029	0.15 U	0.50	0.15	0.2 U	0.2	0.004	0.15 U	0.50	0.15	0.15 U	0.50	0.15
Zinc	56	**4.0** J1	15.0	4.0	**1.6** J1	15.0	1.1	1.1 U	15.0	1.1	**33**	4	0.50	**18.0**	15.0	4.0	**7.5** J1	15.0	4.0
Method SW7470A/EPA 1631E (ng/L)																			
Mercury	12	**1.12**	5.00	1.60	**1.53**	0.500	0.160	**2.09**	0.500	0.160	20.0 U	20.0	2.60	**0.716**	5.00	1.60	**0.676**	0.500	0.160
CONVENTIONALS (mg/L)																			
Chloride (Method 300.0)	---	NA	NA	NA	**2.2**	0.40	0.20	**2.3**	0.40	0.20	NA	NA	NA	NA	NA	NA	**3.9**	0.40	0.20
Nitrate (Method 300.0)	---	0.050 U	0.10	0.050	0.050 U	0.10	0.050	0.050 U	0.10	0.050	**56.8**	2.0	0.140	**70.1**	5.0	2.5	**25.4**	2.0	1.0
Sulfate (Method 300.0)	---	**21.9**	5.0	1.5	**26.9**	5.0	1.5	**23.5**	5.0	1.5	**97.3**	2.0	1.18	**76.1**	50.0	15.0	**48.0**	20.0	6.0
Total Dissolved Solids (Method 160.1)	---	**225**	30.0	9.7	**299** J	30.0	9.7	**267**	30.0	9.7	**573**	10.0	10.0	**657**	60.0	19.4	**430**	30.0	9.7
FIELD PARAMETERS																			
Temperature (°C)	---	14.05	NA	NA	14.33	NA	NA	14.71	NA	NA	16.46	NA	NA	15.34	NA	NA	16.40	NA	NA
Conductivity (uS/cm)	---	421	NA	NA	327	NA	NA	3803	NA	NA	20248	NA	NA	1207	NA	NA	494	NA	NA
Dissolved Oxygen (mg/L)	---	0.63	NA	NA	0.61	NA	NA	1.24	NA	NA	1.07	NA	NA	0.49	NA	NA	2.41	NA	NA
pH (SU)	---	7.05	NA	NA	6.10	NA	NA	5.97	NA	NA	5.97	NA	NA	6.30	NA	NA	8.38	NA	NA
ORP (mV)	---	-56.1	NA	NA	-17.6	NA	NA	-57	NA	NA	-165.6	NA	NA	87.4	NA	NA	2	NA	NA
Turbidity (NTU)	---	3.74	NA	NA	9.97	NA	NA	60.1	NA	NA	3.97	NA	NA	4.07	NA	NA	12.46	NA	NA
Ferrous Iron (mg/L)	---	1.8	NA	NA	3.1	NA	NA	2.8	NA	NA	NA	NA	NA	0.2	NA	NA	0.0	NA	NA

TABLE L-1
GROUNDWATER ANALYTICAL RESULTS
BOEING ISAACSON-THOMPSON
REMEDIAL INVESTIGATION

Location:		IT-MW-5			IT-MW-6			IT-DUP-1 (IT-MW-6)			IT-MW-6			IT-DUP-1 (IT-MW-6)			IT-MW-6		
Laboratory Sample ID:	Preliminary	6789068/6789069/6789070/VJ53H			UA44A/UA44I/UA45A/UA45H/UB46A/UB46H			UA44G/UA44O/UA45G/UA45N/UB46G/UB46N			6572517/6572518/UL36D			6572521/UL36F			6697970/6697971/6697972/UZ66E		
Laboratory Data Package ID:	Cleanup	1335688/VJ53			UA44/UA45/UB46			UA44/UA45/UB46			1294218/UL36			1294218/UL36			1317686/UZ66		
Sample Date:	Levels	9/13/2012			12/07/2011			12/07/2011			03/08/2012			03/08/2012			6/21/2012		
		Result	Reporting Limit	Detection Limit	Result	Reporting Limit	Detection Limit	Result	Reporting Limit	Detection Limit	Result	Reporting Limit	Detection Limit	Result	Reporting Limit	Detection Limit	Result	Reporting Limit	Detection Limit
VOLATILES (µg/L)																			
Method SW8260C																			
Acetone	110,000	3.0 U	5.0	3.0	5.0 U	5.0	2.1	5.0 U	5.0	2.1	6 U	10	6.0	6.0 U	10	6.0	3.0 U	5.0	3.0
Acrolein	---	5.0 U	25	5.0	5.0 UJ	5.0	2.5	5.0 UJ	5.0	2.5	10 U	50	10	10 U	50	10	5.0 U	25	5.0
Acrylonitrile	0.057	1.0 U	5.0	1.0	1.0 U	1.0	0.60	1.0 U	1.0	0.60	2.0 U	10	2.0	2.0 U	10	2.0	1.0 U	5.0	1.0
Benzene	2	0.1 U	0.2	0.1	0.2 U	0.2	0.03	0.2 U	0.2	0.03	0.2 U	0.4	0.2	0.2 U	0.4	0.2	**0.1** J1	0.2	0.1
Bromobenzene	---	0.1 U	0.5	0.1	0.2 U	0.2	0.06	0.2 U	0.2	0.06	0.2 U	1.0	0.2	0.2 U	1.0	0.2	0.1 U	0.5	0.1
Bromochloromethane	---	0.1 U	0.5	0.1	0.2 U	0.2	0.06	0.2 U	0.2	0.06	0.2 U	1.0	0.2	0.2 U	1.0	0.2	0.1 U	0.5	0.1
Bromodichloromethane	17	0.1 U	0.5	0.1	0.2 U	0.2	0.05	0.2 U	0.2	0.05	0.2 U	1.0	0.2	0.2 U	1.0	0.2	0.1 U	0.5	0.1
Bromoform	---	0.1 U	0.5	0.1	0.2 U	0.2	0.06	0.2 U	0.2	0.06	0.2 U	1.0	0.2	0.2 U	1.0	0.2	0.1 UJ	0.5	0.1
Bromomethane	---	0.1 U	0.5	0.1	1.0 U	1.0	0.25	1.0 U	1.0	0.25	0.2 U	1.0	0.2	0.2 U	1.0	0.2	0.1 U	0.5	0.1
2-Butanone	73,000	1.0 U	5.0	1.0	5.0 UJ	5.0	0.81	5.0 UJ	5.0	0.81	2.0 U	10	2.0	2.0 U	10	2.0	1.0 U	5.0	1.0
n-Butylbenzene	780	0.1 U	0.5	0.1	0.2 U	0.2	0.02	0.2 U	0.2	0.02	0.2 U	1.0	0.2	0.2 U	1.0	0.2	0.1 U	0.5	0.1
sec-Butylbenzene	---	0.1 U	0.5	0.1	0.2 U	0.2	0.02	0.2 U	0.2	0.02	0.2 U	1.0	0.2	0.2 U	1.0	0.2	**0.2** J1	0.5	0.1
tert-Butylbenzene	---	0.1 U	0.5	0.1	0.2 U	0.2	0.03	0.2 U	0.2	0.03	0.2 U	1.0	0.2	0.2 U	1.0	0.2	0.1 U	0.5	0.1
Carbon Disulfide	3900	0.4 U	0.5	0.4	0.2 U	0.2	0.04	0.2 U	0.2	0.04	0.8 U	1.0	0.8	0.8 U	1.0	0.8	0.4 U	0.5	0.4
Carbon Tetrachloride	0.46	0.1 U	0.2	0.1	0.2 U	0.2	0.04	0.2 U	0.2	0.04	0.2 U	0.4	0.2	0.2 U	0.4	0.2	0.1 U	0.2	0.1
Chlorobenzene	270	0.1 U	0.5	0.1	0.2 U	0.2	0.02	0.2 U	0.2	0.02	0.2 U	1.0	0.2	0.2 U	1.0	0.2	0.1 U	0.5	0.1
Chloroethane	21,000	0.1 U	0.5	0.1	0.2 U	0.2	0.09	0.2 U	0.2	0.09	**0.2** J1	1.0	0.2	**0.2** J1	1.0	0.2	**1**	0.5	0.1
Chloroform	9.4	0.1 U	0.2	0.1	**0.3**	0.2	0.03	**0.3**	0.2	0.03	0.2 U	0.4	0.2	0.2 U	0.4	0.2	**0.2** J1	0.2	0.1
Chloromethane	10.3	0.2 U	0.5	0.2	0.5 U	0.5	0.10	0.5 U	0.5	0.10	0.4 U	1.0	0.4	0.4 U	1.0	0.4	0.2 U	0.5	0.2
2-Chlorotoluene	---	0.1 U	0.5	0.1	0.2 U	0.2	0.02	0.2 U	0.2	0.02	0.2 U	1.0	0.2	0.2 U	1.0	0.2	0.1 U	0.5	0.1
4-Chlorotoluene	2600	0.1 U	0.5	0.1	0.2 U	0.2	0.02	0.2 U	0.2	0.02	0.2 U	1.0	0.2	0.2 U	1.0	0.2	0.1 U	0.5	0.1
1,2-Dibromo-3-chloropropane	---	0.2 U	0.5	0.2	0.5 U	0.5	0.04	0.5 U	0.5	0.04	0.4 U	1.0	0.4	0.4 U	1.0	0.4	0.2 U	0.5	0.2
Dibromochloromethane	---	0.1 U	0.5	0.1	0.2 U	0.2	0.05	0.2 U	0.2	0.05	0.2 U	1.0	0.2	0.2 U	1.0	0.2	0.1 U	0.5	0.1
Dibromomethane	---	0.1 U	0.5	0.1	0.2 U	0.2	0.14	0.2 U	0.2	0.14	0.2 U	1.0	0.2	0.2 U	1.0	0.2	0.1 U	0.5	0.1
trans-1,4-Dichloro-2-butene	---	1.0 U	5.0	1.0	1.0 UJ	1.0	0.32	1.0 UJ	1.0	0.32	2.0 U	10	2.0	2.0 U	10	2.0	1.0 UJ	5.0	1.0
1,2-Dichlorobenzene	440	0.1 U	0.5	0.1	0.2 U	0.2	0.04	0.2 U	0.2	0.04	0.2 U	1.0	0.2	0.2 U	1.0	0.2	0.1 U	0.5	0.1
1,3-Dichlorobenzene	960	0.1 U	0.5	0.1	0.2 U	0.2	0.04	0.2 U	0.2	0.04	0.2 U	1.0	0.2	0.2 U	1.0	0.2	0.1 U	0.5	0.1
1,4-Dichlorobenzene	1.7	0.1 U	0.5	0.1	0.2 U	0.2	0.04	0.2 U	0.2	0.04	0.2 U	1.0	0.2	0.2 U	1.0	0.2	0.1 U	0.5	0.1
1,1-Dichloroethane	33	**0.1** J1	0.5	0.1	**1.2**	0.2	0.05	**1.3**	0.2	0.05	**1.7**	1.0	0.2	**1.7**	1.0	0.2	**3.3**	0.5	0.1
1,2-Dichloroethane	3.6	0.1 U	0.2	0.1	0.2 U	0.2	0.07	0.2 U	0.2	0.07	0.2 U	0.4	0.2	0.2 U	0.4	0.2	0.1 U	0.2	0.1
1,1-Dichloroethene	3.2	0.1 U	0.2	0.1	**0.6**	0.2	0.05	**0.6**	0.2	0.05	**0.7**	0.4	0.2	**0.7**	0.4	0.2	**4.3**	0.2	0.1
cis-1,2-Dichloroethene	130	0.1 U	0.2	0.1	**130**	1.0	0.22	**140**	1.0	0.22	**150**	4.0	2.0	**160**	4.0	2.0	**240**	4.0	2.0
trans-1,2-Dichloroethene	940	0.1 U	0.2	0.1	**2.1**	0.2	0.05	**2.2**	0.2	0.05	**2.6**	0.4	0.2	**2.6**	0.4	0.2	**4**	0.2	0.1
1,2-Dichloropropane	3.7	0.1 U	0.5	0.1	0.2 U	0.2	0.04	0.2 U	0.2	0.04	0.2 U	1.0	0.2	0.2 U	1.0	0.2	0.1 U	0.5	0.1
1,3-Dichloropropane	---	0.1 U	0.5	0.1	0.2 U	0.2	0.06	0.2 U	0.2	0.06	0.2 U	1.0	0.2	0.2 U	1.0	0.2	0.1 U	0.5	0.1
2,2-Dichloropropane	---	0.1 U	0.5	0.1	0.2 U	0.2	0.05	0.2 U	0.2	0.05	0.2 U	1.0	0.2	0.2 U	1.0	0.2	0.1 U	0.5	0.1
1,1-Dichloropropene	---	0.1 U	0.5	0.1	0.2 U	0.2	0.03	0.2 U	0.2	0.03	0.2 U	1.0	0.2	0.2 U	1.0	0.2	0.1 U	0.5	0.1
cis-1,3-Dichloropropene	---	0.1 U	0.2	0.1	0.2 U	0.2	0.06	0.2 U	0.2	0.06	0.2 U	0.4	0.2	0.2 U	0.4	0.2	0.1 U	0.2	0.1
trans-1,3-Dichloropropene	---	0.1 U	0.2	0.1	0.2 U	0.2	0.08	0.2 U	0.2	0.08	0.2 U	0.4	0.2	0.2 U	0.4	0.2	0.1 U	0.2	0.1
Ethylbenzene	1.7	0.1 U	0.5	0.1	0.2 U	0.2	0.04	0.2 U	0.2	0.04	0.2 U	1.0	0.2	0.2 U	1.0	0.2	0.1 U	0.5	0.1
Ethylene Dibromide	---	0.1 U	0.5	0.1	0.2 U	0.2	0.08	0.2 U	0.2	0.08	0.2 U	1.0	0.2	0.2 U	1.0	0.2	0.1 U	0.5	0.1
Hexachlorobutadiene	---	0.1 U	0.5	0.1	0.5 U	0.5	0.07	0.5 U	0.5	0.07	0.2 U	1.0	0.2	0.2 U	1.0	0.2	0.1 U	0.5	0.1
2-Hexanone	3200	1.0 U	5.0	1.0	5.0 U	5.0	0.90	5.0 U	5.0	0.90	2.0 U	10	2.0	2.0 U	10	2.0	1.0 U	5.0	1.0
Isopropylbenzene	270	0.1 U	0.5	0.1	0.2 U	0.2	0.02	0.2 U	0.2	0.02	0.2 U	1.0	0.2	0.2 U	1.0	0.2	0.1 U	0.5	0.1
4-Isopropyltoluene	---	0.1 U	0.5	0.1	0.2 U	0.2	0.03	0.2 U	0.2	0.03	0.2 U	1.0	0.2	0.2 U	1.0	0.2	0.1 U	0.5	0.1
Methyl Iodide	---	0.1 U	0.5	0.1	1.0 U	1.0	0.23	1.0 U	1.0	0.23	0.2 U	1.0	0.2	0.2 U	1.0	0.2	0.1 U	0.5	0.1
4-Methyl-2-Pentanone (MIBK)	19,000	1.0 U	5.0	1.0	5.0 U	5.0	0.97	5.0 U	5.0	0.97	2.0 U	10	2.0	2.0 U	10	2.0	1.0 U	5.0	1.0
Methylene Chloride	230	0.2 U	0.5	0.2	0.5 U	0.5	0.48	0.5 U	0.5	0.48	0.4 U	1.0	0.4	0.4 U	1.0	0.4	0.2 U	0.5	0.2
Naphthalene	26	0.1 U	0.5	0.1	0.5 U	0.5	0.12	0.5 U	0.5	0.12	0.2 U	1.0	0.2	0.2 U	1.0	0.2	0.1 U	0.5	0.1
n-Propylbenzene	530	0.1 U	0.5	0.1	0.2 U	0.2	0.02	0.2 U	0.2	0.02	0.2 U	1.0	0.2	0.2 U	1.0	0.2	0.1 U	0.5	0.1
Styrene	77,000	0.1 U	0.5	0.1	0.2 U	0.2	0.04	0.2 U	0.2	0.04	0.2 U	1.0	0.2	0.2 U	1.0	0.2	0.1 U	0.5	0.1
1,1,1,2-Tetrachloroethane	---	0.1 U	0.5	0.1	0.2 U	0.2	0.04	0.2 U	0.2	0.04	0.2 U	1.0	0.2	0.2 U	1.0	0.2	0.1 U	0.5	0.1
1,1,2,2-Tetrachloroethane	0.33	0.1 U	0.2	0.1	0.2 U	0.2	0.06	0.2 U	0.2	0.06	0.2 U	0.4	0.2	0.2 U	0.4	0.2	0.1 U	0.2	0.1
Tetrachloroethene	3.3	0.1 U	0.2	0.1	**0.7**	0.2	0.05	**0.6**	0.2	0.05	**0.8**	0.4	0.2	**0.8**	0.4	0.2	**0.9**	0.2	0.1
Toluene	1300	0.1 U	0.2	0.1	0.2 U	0.2	0.04	0.2 U	0.2	0.04	0.2 U	0.4	0.2	0.2 U	0.4	0.2	0.1 U	0.2	0.1
1,1,2-Trichloro-1,2,2-trifuoroethane	59,000	0.2 U	0.5	0.2	0.2 U	0.2	0.04	0.2 U	0.2	0.04	0.4 U	1.0	0.4	0.4 U	1.0	0.4	0.2 U	0.5	0.2
1,2,3-Trichlorobenzene	---	0.1 U	0.5	0.1	0.5 U	0.5	0.11	0.5 U	0.5	0.11	0.2 U	1.0	0.2	0.2 U	1.0	0.2	0.1 U	0.5	0.1

TABLE L-1
GROUNDWATER ANALYTICAL RESULTS
BOEING ISAACSON-THOMPSON
REMEDIAL INVESTIGATION

Location:		IT-MW-5			IT-MW-6			IT-DUP-1 (IT-MW-6)			IT-MW-6			IT-DUP-1 (IT-MW-6)			IT-MW-6		
Laboratory Sample ID:	Preliminary	6789068/6789069/6789070/VJ53H			UA44A/UA44I/UA45A/UA45H/UB46A/UB46H			UA44G/UA44O/UA45G/UA45N/UB46G/UB46N			6572517/6572518/UL36D			6572521/UL36F			6697970/6697971/6697972/UZ66E		
Laboratory Data Package ID:	Cleanup	1335688/VJ53			UA44/UA45/UB46			UA44/UA45/UB46			1294218/UL36			1294218/UL36			1317686/UZ66		
Sample Date:	Levels	9/13/2012			12/07/2011			12/07/2011			03/08/2012			03/08/2012			6/21/2012		
		Result	Reporting Limit	Detection Limit	Result	Reporting Limit	Detection Limit	Result	Reporting Limit	Detection Limit	Result	Reporting Limit	Detection Limit	Result	Reporting Limit	Detection Limit	Result	Reporting Limit	Detection Limit
1,2,4-Trichlorobenzene	1.13	0.1 U	0.5	0.1	0.5 U	0.5	0.11	0.5 U	0.5	0.11	0.2 U	1.0	0.2	0.2 U	1.0	0.2	0.1 U	0.5	0.1
1,1,1-Trichloroethane	46,000	**2.0**	0.5	0.1	**0.3**	0.2	0.04	**0.3**	0.2	0.04	**0.4** J1	1.0	0.2	**0.4** J1	1.0	0.2	**0.4** J1	0.5	0.1
1,1,2-Trichloroethane	2.3	0.1 U	0.2	0.1	0.2 U	0.2	0.13	0.2 U	0.2	0.13	0.2 U	0.4	0.2	0.2 U	0.4	0.2	0.1 U	0.2	0.1
Trichloroethene	1.4	0.1 U	0.2	0.1	**71**	1.0	0.24	**76**	1.0	0.24	**110**	4.0	2.0	**120**	4.0	2.0	**150**	4.0	2.0
Trichlorofluoromethane	6900	0.1 U	0.5	0.1	0.2 U	0.2	0.04	0.2 U	0.2	0.04	0.2 U	1.0	0.2	0.2 U	1.0	0.2	0.1 U	0.5	0.1
1,2,3-Trichloropropane	---	0.3 U	1.0	0.3	0.5 U	0.5	0.13	0.5 U	0.5	0.13	0.6 U	2.0	0.6	0.6 U	2.0	0.6	0.3 U	1.0	0.3
1,2,4-Trimethylbenzene	303	0.1 U	0.5	0.1	0.2 U	0.2	0.02	0.2 U	0.2	0.02	0.2 U	1.0	0.2	0.2 U	1.0	0.2	0.1 U	0.5	0.1
1,3,5-Trimethylbenzene	303	0.1 U	0.5	0.1	0.2 U	0.2	0.02	0.2 U	0.2	0.02	0.2 U	1.0	0.2	0.2 U	1.0	0.2	0.1 U	0.5	0.1
Vinyl Acetate	---	0.2 U	0.5	0.2	1.0 UJ	1.0	0.07	1.0 UJ	1.0	0.07	0.4 U	1.0	0.4	0.4 U	1.0	0.4	0.2 U	0.5	0.2
Vinyl Chloride	0.53	0.1 U	0.2	0.1	**94**	1.0	0.28	**100**	1.0	0.28	**110**	4.0	2.0	**110**	4.0	2.0	**120**	4.0	2.0
m,p-Xylene	1300	0.1 U	0.5	0.1	**0.2** J1	0.4	0.05	**0.2** J1	0.4	0.05	0.2 U	1.0	0.2	0.2 U	1.0	0.2	0.1 U	0.5	0.1
o-Xylene	1600	0.1 U	0.5	0.1	**0.2** J1	0.2	0.04	**0.1** J1	0.2	0.04	0.2 U	1.0	0.2	0.2 U	1.0	0.2	**0.9**	0.5	0.1
2-Chloroethylvinylether	---	NA	NA	NA	1.0 U	1.0	0.25	1.0 U	1.0	0.25	NA	NA	NA	NA	NA	NA	NA	NA	NA
Bromoethane	---	NA	NA	NA	0.2 U	0.2	0.04	0.2 U	0.2	0.04	NA	NA	NA	NA	NA	NA	NA	NA	NA
VOLATILES (µg/L)																			
Method SW8260C-SIM																			
Tetrachloroethene	3.3	0.010 U	0.020	0.010	**0.56**	0.020	0.0036	**0.58**	0.020	0.0036	**1.1**	0.020	0.010	**0.95**	0.020	0.010	**0.77** J	0.020	0.010
Vinyl Chloride	0.53	0.010 U	0.020	0.010	**42** ES	0.020	0.0022	**43** ES	0.020	0.0022	**96**	0.40	0.20	**94**	0.40	0.20	**140**	0.40	0.20
Acrylonitrile	0.057	NA	NA	NA	**0.16** J	0.050	0.0158	**0.16** J	0.050	0.0158	NA	NA	NA	NA	NA	NA	NA	NA	NA
SEMIVOLATILES (µg/L)																			
Method SW8270D																			
Acenaphthene	120	0.1 U	0.5	0.1	1.0 U	1.0	0.55	**0.6** J1	1.0	0.55	**0.1** J1	0.5	0.1	**0.2** J1	0.5	0.1	0.1 U	0.5	0.1
Acenaphthylene	---	0.1 U	0.5	0.1	1.0 U	1.0	0.48	1.0 U	1.0	0.48	0.1 U	0.5	0.1	0.1 U	0.5	0.1	0.1 U	0.5	0.1
Anthracene	200	0.1 U	0.5	0.1	1.0 U	1.0	0.53	1.0 U	1.0	0.53	0.1 U	0.5	0.1	0.1 U	0.5	0.1	0.1 U	0.5	0.1
Benzo(a)anthracene	0.0018	0.1 U	0.5	0.1	1.0 U	1.0	0.52	1.0 U	1.0	0.52	0.1 U	0.5	0.1	0.1 U	0.5	0.1	0.1 U	0.5	0.1
Benzo(a)pyrene	0.00018	0.1 U	0.5	0.1	1.0 U	1.0	0.48	1.0 U	1.0	0.48	0.1 U	0.5	0.1	0.1 U	0.5	0.1	0.1 U	0.5	0.1
Benzo(b)fluoranthene	0.0018	0.1 U	0.5	0.1	NA	NA	NA	NA	NA	NA	0.1 U	0.5	0.1	0.1 U	0.5	0.1	0.1 U	0.5	0.1
Benzo(g,h,i)perylene	---	0.1 U	0.5	0.1	1.0 U	1.0	0.55	1.0 U	1.0	0.55	0.1 U	0.5	0.1	0.1 U	0.5	0.1	0.1 U	0.5	0.1
Benzo(k)fluoranthene	0.0018	0.1 U	0.5	0.1	NA	NA	NA	NA	NA	NA	0.1 U	0.5	0.1	0.1 U	0.5	0.1	0.1 U	0.5	0.1
Total Benzofluoranthenes	0.0018	NA	NA	NA	1.0 U	1.0	0.48	1.0 U	1.0	0.48	NA	NA	NA	NA	NA	NA	NA	NA	NA
Benzoic Acid	2,240	6 UJ	15	6	10 UJ	10	5.1	10 U	10	5.1	6 UJ	14	6	6 UJ	14	6	6 U	15	6
Benzyl Alcohol	182	5 U	15	5	5.0 U	5.0	2.0	5.0 U	5.0	2.0	5 U	14	5	5 U	14	5	5 U	15	5
4-Bromophenyl-phenylether	---	0.5 U	1	0.5	1.0 U	1.0	0.42	1.0 U	1.0	0.42	0.5 U	1	0.5	0.5 U	1	0.5	0.5 U	1	0.5
Butylbenzylphthalate	0.41	2 U	5	2	1.0 U	1.0	0.56	1.0 U	1.0	0.56	2 U	5	2	2 U	5	2	2 U	5	2
Di-n-Butylphthalate	47	2 U	5	2	1.0 U	1.0	0.54	1.0 U	1.0	0.54	2 U	5	2	2 U	5	2	2 U	5	2
Carbazole	---	0.5 U	1	0.5	1.0 U	1.0	0.31	1.0 U	1.0	0.31	0.5 U	1	0.5	0.5 U	1	0.5	0.5 U	1	0.5
4-Chloro-3-methylphenol	3700	0.5 U	1	0.5	5.0 U	5.0	2.4	5.0 U	5.0	2.4	0.5 U	1	0.5	0.5 U	1	0.5	0.5 U	1	0.5
4-Chloroaniline	---	0.5 U	1	0.5	5.0 U	5.0	2.6	5.0 U	5.0	2.6	0.5 U	1	0.5	0.5 U	1	0.5	0.5 U	1	0.5
bis(2-Chloroethoxy) Methane	---	0.5 U	1	0.5	1.0 U	1.0	0.56	1.0 U	1.0	0.56	0.5 U	1	0.5	0.5 U	1	0.5	0.5 U	1	0.5
Bis-(2-Chloroethyl) Ether	---	0.5 U	1	0.5	1.0 U	1.0	0.58	1.0 U	1.0	0.58	0.5 U	1	0.5	0.5 U	1	0.5	0.5 U	1	0.5
2-Chloronaphthalene	---	0.4 U	1	0.4	1.0 U	1.0	0.48	1.0 U	1.0	0.48	0.4 U	1	0.4	0.4 U	1	0.4	0.4 U	1	0.4
2-Chlorophenol	---	0.5 U	1	0.5	1.0 U	1.0	0.53	1.0 U	1.0	0.53	0.5 U	1	0.5	0.5 U	1	0.5	0.5 U	1	0.5
4-Chlorophenyl-phenylether	---	0.5 U	1	0.5	1.0 U	1.0	0.45	1.0 U	1.0	0.45	0.5 U	1	0.5	0.5 U	1	0.5	0.5 U	1	0.5
2,2'-Oxybis(1-Chloropropane)	---	0.5 U	1	0.5	1.0 U	1.0	0.62	1.0 U	1.0	0.62	0.5 U	1	0.5	0.5 U	1	0.5	0.5 U	1	0.5
Chrysene	0.018	0.1 U	0.5	0.1	1.0 U	1.0	0.55	1.0 U	1.0	0.55	0.1 U	0.5	0.1	0.1 U	0.5	0.1	0.1 U	0.5	0.1
Dibenz(a,h)anthracene	0.0018	0.1 U	0.5	0.1	1.0 U	1.0	0.48	1.0 U	1.0	0.48	0.1 U	0.5	0.1	0.1 U	0.5	0.1	0.1 U	0.5	0.1
Dibenzofuran	1.3	0.5 U	1	0.5	1.0 U	1.0	0.48	1.0 U	1.0	0.48	0.5 U	1	0.5	0.5 U	1	0.5	0.5 U	1	0.5
1,2-Dichlorobenzene	440	0.5 U	1	0.5	1.0 U	1.0	0.36	1.0 U	1.0	0.36	0.5 U	1	0.5	0.5 U	1	0.5	0.5 U	1	0.5
1,3-Dichlorobenzene	---	0.5 U	1	0.5	1.0 U	1.0	0.36	1.0 U	1.0	0.36	0.5 U	1	0.5	0.5 U	1	0.5	0.5 U	1	0.5
1,4-Dichlorobenzene	1.7	0.5 U	1	0.5	1.0 U	1.0	0.40	1.0 U	1.0	0.40	0.5 U	1	0.5	0.5 U	1	0.5	0.5 U	1	0.5
3,3'-Dichlorobenzidine	---	2 U	5	2	5.0 U	5.0	1.5	5.0 U	5.0	1.5	2 U	5	2	2 U	5	2	2 U	5	2
2,4-Dichlorophenol	---	0.5 U	1	0.5	5.0 U	5.0	2.6	5.0 U	5.0	2.6	0.5 U	1	0.5	0.5 U	1	0.5	0.5 U	1	0.5
Diethylphthalate	4,236	2 U	5	2	1.0 U	1.0	0.58	1.0 U	1.0	0.58	2 U	5	2	2 U	5	2	2 U	5	2
2,4-Dimethylphenol	660	0.5 U	1	0.5	1.0 U	1.0	0.36	1.0 U	1.0	0.36	0.5 U	1	0.5	0.5 U	1	0.5	0.5 U	1	0.5
Dimethylphthalate	1,100,000	2 U	5	2	1.0 U	1.0	0.53	1.0 U	1.0	0.53	2 U	5	2	2 U	5	2	2 U	5	2
4,6-Dinitro-2-Methylphenol	---	5 U	15	5	10 U	10	3.1	10 U	10	3.1	5 U	14	5	5 U	14	5	5 U	15	5
2,4-Dinitrophenol	---	10 U	30	10	10.0 U	10	3.5	10 U	10	3.5	10 U	29	10	10 U	29	10	10 U	30	10
2,4-Dinitrotoluene	---	1 U	5	1	5.0 U	5.0	2.5	5.0 U	5.0	2.5	1 U	5	1	1 U	5	1	1 U	5	1
2,6-Dinitrotoluene	---	0.5 U	1	0.5	5.0 U	5.0	2.4	5.0 U	5.0	2.4	0.5 U	1	0.5	0.5 U	1	0.5	0.5 U	1	0.5
bis(2-Ethylhexyl)phthalate	1.2	2 U	5	2	2.0 U	1.0	1.9	1.0 U	1.0	1.9	2 U	5	2	2 U	5	2	2 U	5	2

TABLE L-1
GROUNDWATER ANALYTICAL RESULTS
BOEING ISAACSON-THOMPSON
REMEDIAL INVESTIGATION

Location:		IT-MW-5			IT-MW-6			IT-DUP-1 (IT-MW-6)			IT-MW-6			IT-DUP-1 (IT-MW-6)			IT-MW-6		
Laboratory Sample ID:	Preliminary	6789068/6789069/6789070/VJ53H			UA44A/UA44I/UA45A/UA45H/UB46A/UB46H			UA44G/UA44O/UA45G/UA45N/UB46G/UB46N			6572517/6572518/UL36D			6572521/UL36F			6697970/6697971/6697972/UZ66E		
Laboratory Data Package ID:	Cleanup	1335688/VJ53			UA44/UA45/UB46			UA44/UA45/UB46			1294218/UL36			1294218/UL36			1317686/UZ66		
Sample Date:	Levels	9/13/2012			12/07/2011			12/07/2011			03/08/2012			03/08/2012			6/21/2012		
		Result	Reporting Limit	Detection Limit	Result	Reporting Limit	Detection Limit	Result	Reporting Limit	Detection Limit	Result	Reporting Limit	Detection Limit	Result	Reporting Limit	Detection Limit	Result	Reporting Limit	Detection Limit
Fluoranthene	11	0.1 U	0.5	0.1	1.0 U	1.0	0.52	1.0 U	1.0	0.52	0.1 U	0.5	0.1	0.1 U	0.5	0.1	0.1 U	0.5	0.1
Fluorene	45	0.1 U	0.5	0.1	1.0 U	1.0	0.56	1.0 U	1.0	0.56	0.1 U	0.5	0.1	0.1 U	0.5	0.1	0.1 U	0.5	0.1
Hexachlorobenzene	---	0.1 U	0.5	0.1	1.0 U	1.0	0.47	1.0 U	1.0	0.47	0.1 U	0.5	0.1	0.1 U	0.5	0.1	0.1 U	0.5	0.1
Hexachlorobutadiene	---	0.5 U	1	0.5	1.0 U	1.0	0.31	1.0 U	1.0	0.31	0.5 U	1	0.5	0.5 U	1	0.5	0.5 U	1	0.5
Hexachlorocyclopentadiene	---	5 U	15	5	5.0 U	5.0	1.2	5.0 U	5.0	1.2	5 U	14	5	5 U	14	5	5 U	15	5
Hexachloroethane	---	1 U	5	1	1.0 U	1.0	0.35	1.0 U	1.0	0.35	1 U	5	1	1 U	5	1	1 U	5	1
Indeno(1,2,3-cd)pyrene	0.0018	0.1 U	0.5	0.1	1.0 U	1.0	0.48	1.0 U	1.0	0.48	0.1 U	0.5	0.1	0.1 U	0.5	0.1	0.1 U	0.5	0.1
Isophorone	---	0.5 U	1	0.5	1.0 U	1.0	0.48	1.0 U	1.0	0.48	0.5 U	1	0.5	0.5 U	1	0.5	0.5 U	1	0.5
1-Methylnaphthalene	2.3	0.1 U	0.5	0.1	1.0 U	1.0	0.48	1.0 U	1.0	0.48	0.1 U	0.5	0.1	0.1 U	0.5	0.1	0.1 U	0.5	0.1
2-Methylnaphthalene	64	0.1 U	0.5	0.1	1.0 U	1.0	0.48	1.0 U	1.0	0.48	0.1 U	0.5	0.1	0.1 U	0.5	0.1	0.1 U	0.5	0.1
2-Methylphenol	3100	0.5 U	1	0.5	1.0 U	1.0	0.53	1.0 U	1.0	0.53	0.5 U	1	0.5	0.5 U	1	0.5	0.5 U	1	0.5
4-Methylphenol	330	0.5 U	1	0.5	1.0 U	1.0	0.52	1.0 U	1.0	0.52	0.5 U	1	0.5	0.5 U	1	0.5	0.5 U	1	0.5
Naphthalene	26	0.1 U	0.5	0.1	1.0 U	1.0	0.52	1.0 U	1.0	0.52	0.1 U	0.5	0.1	0.1 U	0.5	0.1	**0.1** J1	0.5	0.1
2-Nitroaniline	---	0.5 U	1	0.5	5.0 U	5.0	2.6	5.0 U	5.0	2.6	0.5 U	1	0.5	0.5 U	1	0.5	0.5 U	1	0.5
3-Nitroaniline	---	0.5 U	1	0.5	5.0 U	5.0	2.3	5.0 U	5.0	2.3	0.5 U	1	0.5	0.5 U	1	0.5	0.5 U	1	0.5
4-Nitroaniline	---	0.5 U	1	0.5	5.0 U	5.0	2.2	5.0 U	5.0	2.2	0.5 U	1	0.5	0.5 U	1	0.5	0.5 U	1	0.5
Nitrobenzene	---	0.5 U	1	0.5	1.0 U	1.0	0.58	1.0 U	1.0	0.58	0.5 U	1	0.5	0.5 U	1	0.5	0.5 U	1	0.5
2-Nitrophenol	---	0.5 U	1	0.5	5.0 U	5.0	2.0	5.0 U	5.0	2.0	0.5 U	1	0.5	0.5 U	1	0.5	0.5 U	1	0.5
4-Nitrophenol	---	10 U	30	10	5.0 U	5.0	2.6	5.0 U	5.0	2.6	10 U	29	10	10 U	29	10	10 U	30	10
N-Nitroso-Di-N-Propylamine	---	0.5 U	1	0.5	1.0 U	1.0	0.56	1.0 U	1.0	0.56	0.5 U	1	0.5	0.5 U	1	0.5	0.5 U	1	0.5
N-Nitrosodiphenylamine	1.96	0.5 U	1	0.5	1.0 U	1.0	0.46	1.0 U	1.0	0.46	0.5 U	1	0.5	0.5 U	1	0.5	0.5 U	1	0.5
Di-n-Octyl phthalate	---	2 U	5	2	1.0 U	1.0	0.51	1.0 U	1.0	0.51	2 U	5	2	2 U	5	2	2 U	5	2
Pentachlorophenol	---	1 UJ	5	1	5.0 U	5.0	2.4	5.0 U	5.0	2.4	1 U	5	1	1 U	5	1	1 U	5	1
Phenanthrene	---	0.1 U	0.5	0.1	1.0 U	1.0	0.56	1.0 U	1.0	0.56	0.1 U	0.5	0.1	0.1 U	0.5	0.1	0.1 U	0.5	0.1
Phenol	41,000	0.5 U	1	0.5	1.0 U	1.0	0.52	1.0 U	1.0	0.52	0.5 U	1	0.5	0.5 U	1	0.5	0.5 U	1	0.5
Pyrene	9.8	0.1 U	0.5	0.1	1.0 U	1.0	0.55	1.0 U	1.0	0.55	0.1 U	0.5	0.1	0.1 U	0.5	0.1	0.1 U	0.5	0.1
1,2,4-Trichlorobenzene	1.13	0.5 U	1	0.5	1.0 U	1.0	0.38	1.0 U	1.0	0.38	0.5 U	1	0.5	0.5 U	1	0.5	0.5 U	1	0.5
2,4,5-Trichlorophenol	---	0.5 U	1	0.5	5.0 U	5.0	2.2	5.0 U	5.0	2.2	0.5 U	1	0.5	0.5 U	1	0.5	0.5 U	1	0.5
2,4,6-Trichlorophenol	---	0.5 U	1	0.5	5.0 U	5.0	2.4	5.0 U	5.0	2.4	0.5 U	1	0.5	0.5 U	1	0.5	0.5 U	1	0.5
cPAHs (µg/L)																			
Method SW8270D-SIM																			
Benzo(a)anthracene	0.0018	0.0050 U	0.010	0.0050	0.010 U	0.010	0.0063	0.010 U	0.010	0.0063	0.0047 U	0.0094	0.0047	0.0047 U	0.0095	0.0047	0.0051 U	0.010	0.0051
Benzo(a)pyrene	0.00018	0.0050 U	0.010	0.0050	0.010 U	0.010	0.0048	0.010 U	0.010	0.0048	0.0047 U	0.0094	0.0047	0.0047 U	0.0095	0.0047	0.0051 U	0.010	0.0051
Benzo(b)fluoranthene	0.0018	0.0050 U	0.010	0.0050	NA	NA	NA	NA	NA	NA	0.0047 U	0.0094	0.0047	0.0047 U	0.0095	0.0047	0.0051 U	0.010	0.0051
Benzo(k)fluoranthene	0.0018	0.0050 U	0.010	0.0050	NA	NA	NA	NA	NA	NA	0.0047 U	0.0094	0.0047	0.0047 U	0.0095	0.0047	0.0051 U	0.010	0.0051
Total Benzofluoranthenes	0.0018	NA	NA	NA	0.020 UJ	0.020	0.0099	0.020 UJ	0.020	0.0099	NA	NA	NA	NA	NA	NA	NA	NA	NA
Chrysene	0.018	0.0050 U	0.010	0.0050	0.010 U	0.010	0.0046	0.010 U	0.010	0.0046	0.0047 U	0.0094	0.0047	0.0047 U	0.0095	0.0047	0.0051 U	0.010	0.0051
Dibenz(a,h)anthracene	0.0018	0.0040 U	0.010	0.0040	0.010 U	0.010	0.0048	0.010 U	0.010	0.0048	0.0038 U	0.0094	0.0038	0.0038 U	0.0095	0.0038	0.0041 U	0.010	0.0041
Indeno(1,2,3-cd)pyrene	0.0018	0.0040 U	0.010	0.0040	0.010 U	0.010	0.0046	0.010 U	0.010	0.0046	0.0038 U	0.0094	0.0038	0.0038 U	0.0095	0.0038	0.0041 U	0.010	0.0041
Pyrene	9.8	0.010 U	0.050	0.010	NA	NA	NA	NA	NA	NA	0.0094 U	0.047	0.0094	0.0095 U	0.047	0.0095	0.010 U	0.051	0.010
cPAH TEQ	0.00018	ND	NA	NA	ND	NA	NA	ND	NA	NA	ND	NA	NA	ND	NA	NA	ND	NA	NA
PCBs (µg/L)																			
Method SW8082																			
Aroclor 1016	0.000023	0.0061 U	0.010	0.0061	0.010 U	0.010	0.0025	0.010 U	0.010	0.0025	0.0057 U	0.0096	0.0057	0.0057 U	0.0095	0.0057	0.0059 U	0.0098	0.0059
Aroclor 1221	---	0.0061 U	0.010	0.0061	0.010 U	0.010	0.0028	0.010 U	0.010	0.0028	0.0057 U	0.0096	0.0057	0.0057 U	0.0095	0.0057	0.0059 U	0.0098	0.0059
Aroclor 1232	---	0.0072 U	0.010	0.0072	0.010 U	0.010	0.0028	0.010 U	0.010	0.0028	0.0067 U	0.0096	0.0067	0.0067 U	0.0095	0.0067	0.0069 U	0.0098	0.0069
Aroclor 1242	0.000023	0.0061 U	0.010	0.0061	0.010 U	0.010	0.0028	0.010 U	0.010	0.0028	0.0057 U	0.0096	0.0057	0.0057 U	0.0095	0.0057	0.0059 U	0.0098	0.0059
Aroclor 1248	0.000023	0.0051 U	0.010	0.0051	0.010 U	0.010	0.0028	0.010 U	0.010	0.0028	0.0048 U	0.0096	0.0048	0.0048 U	0.0095	0.0048	0.0049 U	0.0098	0.0049
Aroclor 1254	0.0000055	0.0051 U	0.010	0.0051	0.010 U	0.010	0.0028	0.010 U	0.010	0.0028	0.0048 U	0.0096	0.0048	0.0048 U	0.0095	0.0048	0.0049 U	0.0098	0.0049
Aroclor 1260	0.000023	0.0051 U	0.010	0.0051	0.010 U	0.010	0.0028	0.010 U	0.010	0.0028	0.0048 U	0.0096	0.0048	0.0048 U	0.0095	0.0048	0.0049 U	0.0098	0.0049
Total PCBs	0.000023	ND	NA	NA	ND	NA	NA	ND	NA	NA	ND	NA	NA	ND	NA	NA	ND	NA	NA

TABLE L-1
GROUNDWATER ANALYTICAL RESULTS
BOEING ISAACSON-THOMPSON
REMEDIAL INVESTIGATION

Location:		IT-MW-5			IT-MW-6			IT-DUP-1 (IT-MW-6)			IT-MW-6			IT-DUP-1 (IT-MW-6)			IT-MW-6		
Laboratory Sample ID:	Preliminary	6789068/6789069/6789070/VJ53H			UA44A/UA44I/UA45A/UA45H/UB46A/UB46H			UA44G/UA44O/UA45G/UA45N/UB46G/UB46N			6572517/6572518/UL36D			6572521/UL36F			6697970/6697971/6697972/UZ66E		
Laboratory Data Package ID:	Cleanup	1335688/VJ53			UA44/UA45/UB46			UA44/UA45/UB46			1294218/UL36			1294218/UL36			1317686/UZ66		
Sample Date:	Levels	9/13/2012			12/07/2011			12/07/2011			03/08/2012			03/08/2012			6/21/2012		
		Result	Reporting Limit	Detection Limit	Result	Reporting Limit	Detection Limit	Result	Reporting Limit	Detection Limit	Result	Reporting Limit	Detection Limit	Result	Reporting Limit	Detection Limit	Result	Reporting Limit	Detection Limit
TOTAL PETROLEUM HYDROCARBONS (mg/L)																			
NWTPH-Dx																			
Diesel-Range Organics	0.5	0.029 U	0.097	0.029	0.10 U	0.10	0.022	0.10 U	0.10	0.022	0.068 U	0.24	0.068	0.067 U	0.24	0.067	0.031 U	0.100	0.031
Oil-Range Organics	0.5	0.068 U	0.240	0.068	0.20 U	0.20	0.044	0.20 U	0.20	0.044	0.97 U	2.9	0.970	0.95 U	2.9	0.950	0.073 U	0.260	0.073
NWTPH-G																			
Gasoline-Range Organics	1.0/0.8	0.05 U	0.25	0.05	0.25 U	0.25	0.06	0.25 U	0.25	0.06	0.05 U	0.25	0.05	0.05 U	0.25	0.05	**0.057** J1	0.250	0.05
TOTAL METALS (µg/L)																			
Method 200.8																			
Antimony	---	0.33 U	1.0	0.33	0.2 U	0.2	0.010	0.2 U	0.2	0.010	0.42 U	1.0	0.42	0.42 U	1.0	0.42	0.33 U	1.0	0.33
Arsenic	---	**0.52** J1	2.0	0.40	2.2	0.2	0.048	**2.1**	0.2	0.048	0.95 U	2.0	0.95	0.95 U	2.0	0.95	**0.68** J1	2.0	0.20
Barium	---	**53.7**	2.0	0.41	**91.3**	0.5	0.020	**92.0**	0.5	0.020	**80.6**	2.0	0.69	**80.5**	2.0	0.69	**45.0**	2.0	0.41
Beryllium	---	**0.043** J1	0.50	0.025	0.2 U	0.2	0.021	0.2 U	0.2	0.021	0.13 U	0.50	0.13	0.13 U	0.50	0.13	**0.029** J1	0.50	0.025
Cadmium	---	0.082 U	0.50	0.082	0.1 U	0.1	0.010	0.1 U	0.1	0.010	0.20 U	0.50	0.20	0.20 U	0.50	0.20	0.048 U	0.50	0.048
Chromium	---	0.50 U	2.0	0.50	**0.5**	0.5	0.045	**0.5**	0.5	0.045	0.60 U	2.0	0.60	**0.61** J1	2.0	0.60	**0.54** J1	2.0	0.50
Copper	---	**1.2** J1	2.0	0.40	**0.9**	0.5	0.158	0.5 U	0.5	0.158	**1.5** J1	2.0	0.38	**1.6** J1	2.0	0.38	**0.98** J1	2.0	0.15
Lead	---	0.034 U	1.0	0.034	0.1 U	0.1	0.046	0.1 U	0.1	0.046	0.080 U	1.0	0.080	0.080 U	1.0	0.080	0.034 U	1.0	0.034
Nickel	---	**5.6**	2.0	0.35	**2.5** J	0.5	0.079	**3.1** J	0.5	0.079	**1.8** J1	2.0	0.50	**1.7** J1	2.0	0.50	**2.6**	2.0	0.13
Selenium	---	0.50 U	2.0	0.50	**0.6**	0.5	0.127	**0.8**	0.5	0.127	0.27 U	2.0	0.27	0.27 U	2.0	0.27	0.18 U	2.0	0.18
Silver	---	0.10 U	0.50	0.10	0.2 U	0.2	0.008	0.2 U	0.2	0.008	0.098 U	0.50	0.098	0.098 U	0.50	0.098	0.10 U	0.50	0.10
Thallium	---	0.15 U	0.50	0.15	0.2 U	0.2	0.004	0.2 U	0.2	0.004	0.15 U	0.50	0.15	0.15 U	0.50	0.15	0.029 U	0.50	0.029
Zinc	---	**14.3** J1	15.0	1.1	**10**	4	0.50	**10**	4	0.50	**5.4** J1	15.0	4.0	**6.1** J1	15.0	4.0	**6.9** J1	15.0	1.1
Method SW7196A (mg/L)																			
Chromium VI	0.00058	0.010 U	0.010	0.00300	0.010 U	0.010	0.00300	0.010 U	0.010	0.00300	0.010 U	0.010	0.00300	0.010 U	0.010	0.00300	0.010 U	0.010	0.00300
Method SW7470A/EPA 1631E (ng/L)																			
Mercury	12	**0.669**	0.500	0.160	20.0 U	20.0	2.60	20.0 U	20.0	2.60	**9.97** J, J1	10.0	3.20	**37.4** J	10	3.20	**1.23**	0.500	0.160
DISSOLVED METALS (µg/L)																			
Methods 200.8/SW7196A																			
Antimony	150	0.33 U	1.0	0.33	0.2 U	0.2	0.010	0.2 U	0.2	0.010	0.42 U	1.0	0.42	0.42 U	1.0	0.42	0.33 U	1.0	0.33
Arsenic	8	**0.48** J1	2.0	7.00	**2.1**	0.2	0.048	**2.2**	0.5	0.120	0.95 U	2.0	0.95	0.95 U	2.0	0.95	**0.66** J1	2.0	0.20
Barium	770	**55.3**	2.0	0.41	**89.9**	0.5	0.020	**89.2**	0.5	0.020	**84.9**	2.0	0.69	**92.4**	2.0	0.69	**46.6**	2.0	0.41
Beryllium	12	**0.030** J1	0.50	0.025	0.2 U	0.2	0.021	0.2 U	0.2	0.021	0.13 U	0.50	0.13	0.13 U	0.50	0.13	0.025 U	0.50	0.025
Cadmium	0.25	**0.11** J1	0.50	0.082	0.1 U	0.1	0.010	0.1 U	0.1	0.010	0.20 U	0.50	0.20	0.20 U	0.50	0.20	0.048 U	0.50	0.048
Chromium	74	0.50 U	2.0	0.50	**1**	1	0.11	1 U	1	0.11	**0.61** J1	2.0	0.60	0.60 U	2.0	0.60	**0.60** J1	2.0	0.50
Copper	8	**1.4** J1	2.0	0.40	**1.3**	0.5	0.158	**0.7**	0.5	0.158	**1.5** J, J1	2.0	0.38	0.38 UJ	2.0	0.38	**0.54** J1	2.0	0.15
Lead	2.5	0.034 U	1.0	0.034	0.1 U	0.1	0.046	0.1 U	0.1	0.046	0.080 U	1.0	0.080	0.080 U	1.0	0.080	0.034 U	1.0	0.034
Nickel	8.2	**5.8**	2.0	0.35	**3.1**	0.5	0.079	**2.9**	0.5	0.079	**2.0** J	2.0	0.50	0.50 UJ	2.0	0.50	**2.1**	2.0	0.13
Selenium	5	**0.55** J1	2.0	0.50	**0.6**	0.5	0.127	**0.7**	0.5	0.127	0.27 U	2.0	0.27	0.27 U	2.0	0.27	0.18 U	2.0	0.18
Silver	22	0.10 U	0.50	0.10	0.2 U	0.2	0.008	0.2 U	0.2	0.008	0.098 U	0.50	0.098	0.098 U	0.50	0.098	0.10 U	0.50	0.10
Thallium	0.47	0.15 U	0.50	0.15	0.2 U	0.2	0.004	0.2 U	0.2	0.004	0.15 U	0.50	0.15	0.15 U	0.50	0.15	0.029 U	0.50	0.029
Zinc	56	**12.8** J1	15.0	1.1	**10**	4	0.50	**10**	4	0.50	**6.8** J1	15.0	4.0	4.0 U	15.0	4.0	**8.3** J1	15.0	1.1
Method SW7470A/EPA 1631E (ng/L)																			
Mercury	12	**1.07**	0.500	0.160	20.0 U	20.0	2.60	20.0 U	20.0	2.60	1.60 U	5.00	1.60	1.60 U	5.00	1.60	**1.01**	0.500	0.160
CONVENTIONALS (mg/L)																			
Chloride (Method 300.0)	---	**4.8**	0.40	0.20	NA	NA	NA	NA	NA	NA	NA	NA	NA	NA	NA	NA	**4.4**	0.40	0.20
Nitrate (Method 300.0)	---	**57.9** J	2.0	1.0	**0.1**	0.1	0.007	**0.1**	0.1	0.007	**0.83** J	0.10	0.050	**1.2** J	0.10	0.050	0.050 U	0.10	0.050
Sulfate (Method 300.0)	---	**85.6**	20.0	6.0	**10.1**	0.5	0.295	**10.1**	0.5	0.295	**14.4** J	1.0	0.3	**18.6** J	5.0	1.5	**15.5** J	5.0	1.5
Total Dissolved Solids (Method 160.1)	---	**553**	60.0	19.4	**334**	5.0	5.00	**334**	5.0	5.00	**319**	30.0	9.7	**359**	30.0	9.7	**332**	30.0	9.7
FIELD PARAMETERS																			
Temperature (°C)	---	16.83	NA	NA	16.43	NA	NA	16.43	NA	NA	15.94	NA	NA	15.94	NA	NA	16.01	NA	NA
Conductivity (uS/cm)	---	625	NA	NA	1186	NA	NA	1186	NA	NA	577	NA	NA	577	NA	NA	408	NA	NA
Dissolved Oxygen (mg/L)	---	0.47	NA	NA	1.54	NA	NA	1.54	NA	NA	0.53	NA	NA	0.53	NA	NA	0.47	NA	NA
pH (SU)	---	6.10	NA	NA	5.59	NA	NA	5.59	NA	NA	7.35	NA	NA	7.35	NA	NA	7.43	NA	NA
ORP (mV)	---	32.6	NA	NA	4.8	NA	NA	4.8	NA	NA	38.1	NA	NA	38.1	NA	NA	59.2	NA	NA
Turbidity (NTU)	---	4.71	NA	NA	3.16	NA	NA	3.16	NA	NA	5.86	NA	NA	5.86	NA	NA	3.75	NA	NA
Ferrous Iron (mg/L)	---	0.0	NA	NA	NA	NA	NA	NA	NA	NA	0.8	NA	NA	0.8	NA	NA	0.6	NA	NA

TABLE L-1
GROUNDWATER ANALYTICAL RESULTS
BOEING ISAACSON-THOMPSON
REMEDIAL INVESTIGATION

Location:		IT-DUP-2 (IT-MW-6)			IT-MW-6			IT-DUP-2 (IT-MW-6)			IT-MW-7			IT-MW-7			IT-MW-7		
Laboratory Sample ID:	Preliminary	6697973/6697974/6697975/UZ66F			6789074/6789075/6789076/VJ53J			6789077/6789078/6789079/VJ53K			TZ99A/TZ99D/UA00A/UA00C/UB44A/UB44C			6577001/6577002/UM00A			6693950/6693951/6693952/UZ37C		
Laboratory Data Package ID:	Cleanup	1317686/UZ66			1335688/VJ53			1335688/VJ53			TZ99/UA00/UB44			1295065/UM00			1317022/UZ37		
Sample Date:	Levels	6/21/2012			9/13/2012			9/13/2012			12/05/2011			03/12/2012			6/19/2012		
		Result	Reporting Limit	Detection Limit	Result	Reporting Limit	Detection Limit	Result	Reporting Limit	Detection Limit	Result	Reporting Limit	Detection Limit	Result	Reporting Limit	Detection Limit	Result	Reporting Limit	Detection Limit
VOLATILES (µg/L)																			
Method SW8260C																			
Acetone	110,000	3.0 U	5.0	3.0	3.0 U	5.0	3.0	3.0 U	5.0	3.0	2.0 UJ2	5.0	0.72	3.0 U	5.0	3.0	3.0 U	5.0	3.0
Acrolein	---	5.0 U	25	5.0	5.0 U	25	5.0	5.0 U	25	5.0	5.0 UJ	5.0	0.29	5.0 U	25	5.0	5.0 U	25	5.0
Acrylonitrile	0.057	1.0 U	5.0	1.0	1.0 U	5.0	1.0	1.0 U	5.0	1.0	1.0 U	1.0	0.18	1.0 U	5.0	1.0	1.0 U	5.0	1.0
Benzene	2	**0.1** J1	0.2	0.1	0.1 U	0.2	0.1	0.1 U	0.2	0.1	0.2 U	0.2	0.06	0.1 U	0.2	0.1	0.1 U	0.2	0.1
Bromobenzene	---	0.1 U	0.5	0.1	0.1 U	0.5	0.1	0.1 U	0.5	0.1	0.2 U	0.2	0.05	0.1 U	0.5	0.1	0.1 U	0.5	0.1
Bromochloromethane	---	0.1 U	0.5	0.1	0.1 U	0.5	0.1	0.1 U	0.5	0.1	0.2 U	0.2	0.07	0.1 U	0.5	0.1	0.1 U	0.5	0.1
Bromodichloromethane	17	0.1 U	0.5	0.1	0.1 U	0.5	0.1	0.1 U	0.5	0.1	0.2 U	0.2	0.05	0.1 U	0.5	0.1	0.1 U	0.5	0.1
Bromoform	---	0.1 UJ	0.5	0.1	0.1 U	0.5	0.1	0.1 U	0.5	0.1	0.2 U	0.2	0.07	0.1 U	0.5	0.1	0.1 UJ	0.5	0.1
Bromomethane	---	0.1 U	0.5	0.1	0.1 U	0.5	0.1	0.1 U	0.5	0.1	1.0 U	1.0	0.04	0.1 U	0.5	0.1	0.1 U	0.5	0.1
2-Butanone	73,000	1.0 U	5.0	1.0	1.0 U	5.0	1.0	1.0 U	5.0	1.0	5.0 U	5.0	0.81	1.0 U	5.0	1.0	1.0 U	5.0	1.0
n-Butylbenzene	780	0.1 U	0.5	0.1	0.1 U	0.5	0.1	0.1 U	0.5	0.1	0.2 U	0.2	0.11	0.1 U	0.5	0.1	0.1 U	0.5	0.1
sec-Butylbenzene	---	**0.2** J1	0.5	0.1	0.1 U	0.5	0.1	0.1 U	0.5	0.1	0.2 U	0.2	0.08	0.1 U	0.5	0.1	0.1 U	0.5	0.1
tert-Butylbenzene	---	0.1 U	0.5	0.1	0.1 U	0.5	0.1	0.1 U	0.5	0.1	0.2 U	0.2	0.06	0.1 U	0.5	0.1	0.1 U	0.5	0.1
Carbon Disulfide	3900	0.4 U	0.5	0.4	0.4 U	0.5	0.4	0.4 U	0.5	0.4	0.2 U	0.2	0.09	0.4 U	0.5	0.4	0.4 U	0.5	0.4
Carbon Tetrachloride	0.46	0.1 U	0.2	0.1	0.1 U	0.2	0.1	0.1 U	0.2	0.1	0.2 U	0.2	0.08	0.1 U	0.2	0.1	0.1 U	0.2	0.1
Chlorobenzene	270	0.1 U	0.5	0.1	0.1 U	0.5	0.1	0.1 U	0.5	0.1	0.2 U	0.2	0.04	0.1 U	0.5	0.1	0.1 U	0.5	0.1
Chloroethane	21,000	**1.1**	0.5	0.1	0.1 U	0.5	0.1	**0.1** J1	0.5	0.1	0.2 U	0.2	0.15	0.1 U	0.5	0.1	0.1 U	0.5	0.1
Chloroform	9.4	**0.1** J1	0.2	0.1	**0.2** J1	0.2	0.1	**0.2** J1	0.2	0.1	0.2 U	0.2	0.08	0.1 U	0.2	0.1	0.1 U	0.2	0.1
Chloromethane	10.3	0.2 U	0.5	0.2	0.2 U	0.5	0.2	0.2 U	0.5	0.2	0.5 U	0.5	0.10	0.2 U	0.5	0.2	0.2 U	0.5	0.2
2-Chlorotoluene	---	0.1 U	0.5	0.1	0.1 U	0.5	0.1	0.1 U	0.5	0.1	0.2 U	0.2	0.04	0.1 U	0.5	0.1	0.1 U	0.5	0.1
4-Chlorotoluene	2600	0.1 U	0.5	0.1	0.1 U	0.5	0.1	0.1 U	0.5	0.1	0.2 U	0.2	0.07	0.1 U	0.5	0.1	0.1 U	0.5	0.1
1,2-Dibromo-3-chloropropane	---	0.2 U	0.5	0.2	0.2 U	0.5	0.2	0.2 U	0.5	0.2	0.5 UJ	0.5	0.21	0.2 U	0.5	0.2	0.2 U	0.5	0.2
Dibromochloromethane	---	0.1 U	0.5	0.1	0.1 U	0.5	0.1	0.1 U	0.5	0.1	0.2 U	0.2	0.09	0.1 U	0.5	0.1	0.1 U	0.5	0.1
Dibromomethane	---	0.1 U	0.5	0.1	0.1 U	0.5	0.1	0.1 U	0.5	0.1	0.2 U	0.2	0.08	0.1 U	0.5	0.1	0.1 U	0.5	0.1
trans-1,4-Dichloro-2-butene	---	1.0 UJ	5.0	1.0	1.0 U	5.0	1.0	1.0 U	5.0	1.0	1.0 UJ	1.0	0.24	1.0 U	5.0	1.0	1.0 UJ	5.0	1.0
1,2-Dichlorobenzene	440	0.1 U	0.5	0.1	0.1 U	0.5	0.1	0.1 U	0.5	0.1	0.2 U	0.2	0.06	0.1 U	0.5	0.1	0.1 U	0.5	0.1
1,3-Dichlorobenzene	960	0.1 U	0.5	0.1	0.1 U	0.5	0.1	0.1 U	0.5	0.1	0.2 U	0.2	0.04	0.1 U	0.5	0.1	0.1 U	0.5	0.1
1,4-Dichlorobenzene	1.7	0.1 U	0.5	0.1	0.1 U	0.5	0.1	0.1 U	0.5	0.1	0.2 U	0.2	0.06	0.1 U	0.5	0.1	0.1 U	0.5	0.1
1,1-Dichloroethane	33	**3.2**	0.5	0.1	**2.9**	0.5	0.1	**2.8**	0.5	0.1	0.2 U	0.2	0.05	0.1 U	0.5	0.1	0.1 U	0.5	0.1
1,2-Dichloroethane	3.6	0.1 U	0.2	0.1	0.1 U	0.2	0.1	0.1 U	0.2	0.1	0.2 U	0.2	0.08	0.1 U	0.2	0.1	0.1 U	0.2	0.1
1,1-Dichloroethene	3.2	**4.0**	0.2	0.1	**1.6**	0.2	0.1	**1.6**	0.2	0.1	0.2 U	0.2	0.09	0.1 U	0.2	0.1	0.1 U	0.2	0.1
cis-1,2-Dichloroethene	130	**260**	4.0	2.0	**200**	2.0	1.0	**200**	2.0	1.0	**1.7**	0.2	0.10	**2.8**	0.2	0.1	**2.3**	0.2	0.1
trans-1,2-Dichloroethene	940	**3.9**	0.2	0.1	**4.3**	0.2	0.1	**4.2**	0.2	0.1	0.2 U	0.2	0.08	**0.1** J1	0.2	0.1	**0.1** J1	0.2	0.1
1,2-Dichloropropane	3.7	0.1 U	0.5	0.1	0.1 U	0.5	0.1	0.1 U	0.5	0.1	0.2 U	0.2	0.09	0.1 U	0.5	0.1	0.1 U	0.5	0.1
1,3-Dichloropropane	---	0.1 U	0.5	0.1	0.1 U	0.5	0.1	0.1 U	0.5	0.1	0.2 U	0.2	0.02	0.1 U	0.5	0.1	0.1 U	0.5	0.1
2,2-Dichloropropane	---	0.1 U	0.5	0.1	0.1 U	0.5	0.1	0.1 U	0.5	0.1	0.2 U	0.2	0.08	0.1 U	0.5	0.1	0.1 U	0.5	0.1
1,1-Dichloropropene	---	0.1 U	0.5	0.1	0.1 U	0.5	0.1	0.1 U	0.5	0.1	0.2 U	0.2	0.09	0.1 U	0.5	0.1	0.1 U	0.5	0.1
cis-1,3-Dichloropropene	---	0.1 U	0.2	0.1	0.1 U	0.2	0.1	0.1 U	0.2	0.1	0.2 U	0.2	0.06	0.1 U	0.2	0.1	0.1 U	0.2	0.1
trans-1,3-Dichloropropene	---	0.1 U	0.2	0.1	0.1 U	0.2	0.1	0.1 U	0.2	0.1	0.2 U	0.2	0.06	0.1 U	0.2	0.1	0.1 U	0.2	0.1
Ethylbenzene	1.7	0.1 U	0.5	0.1	0.1 U	0.5	0.1	0.1 U	0.5	0.1	0.2 U	0.2	0.09	0.1 U	0.5	0.1	0.1 U	0.5	0.1
Ethylene Dibromide	---	0.1 U	0.5	0.1	0.1 U	0.5	0.1	0.1 U	0.5	0.1	0.2 U	0.2	0.08	0.1 U	0.5	0.1	0.1 U	0.5	0.1
Hexachlorobutadiene	---	0.1 U	0.5	0.1	0.1 U	0.5	0.1	0.1 U	0.5	0.1	0.5 U	0.5	0.11	0.1 U	0.5	0.1	0.1 U	0.5	0.1
2-Hexanone	3200	1.0 U	5.0	1.0	1.0 U	5.0	1.0	1.0 U	5.0	1.0	5.0 U	5.0	0.31	1.0 U	5.0	1.0	1.0 U	5.0	1.0
Isopropylbenzene	270	0.1 U	0.5	0.1	0.1 U	0.5	0.1	0.1 U	0.5	0.1	0.2 U	0.2	0.06	0.1 U	0.5	0.1	0.1 U	0.5	0.1
4-Isopropyltoluene	---	0.1 U	0.5	0.1	0.1 U	0.5	0.1	0.1 U	0.5	0.1	0.2 U	0.2	0.08	0.1 U	0.5	0.1	0.1 U	0.5	0.1
Methyl Iodide	---	0.1 U	0.5	0.1	0.1 U	0.5	0.1	0.1 U	0.5	0.1	1.0 U	1.0	0.04	0.1 U	0.5	0.1	0.1 U	0.5	0.1
4-Methyl-2-Pentanone (MIBK)	19,000	1.0 U	5.0	1.0	1.0 U	5.0	1.0	1.0 U	5.0	1.0	5.0 U	5.0	0.38	1.0 U	5.0	1.0	1.0 U	5.0	1.0
Methylene Chloride	230	0.2 U	0.5	0.2	0.2 U	0.5	0.2	0.2 U	0.5	0.2	**0.3** J1	0.5	0.39	0.2 U	0.5	0.2	0.2 U	0.5	0.2
Naphthalene	26	0.1 U	0.5	0.1	0.1 U	0.5	0.1	0.1 U	0.5	0.1	0.5 U	0.5	0.07	0.1 U	0.5	0.1	0.1 U	0.5	0.1
n-Propylbenzene	530	0.1 U	0.5	0.1	0.1 U	0.5	0.1	0.1 U	0.5	0.1	0.2 U	0.2	0.08	0.1 U	0.5	0.1	0.1 U	0.5	0.1
Styrene	77,000	0.1 U	0.5	0.1	0.1 U	0.5	0.1	0.1 U	0.5	0.1	0.2 U	0.2	0.07	0.1 U	0.5	0.1	0.1 U	0.5	0.1
1,1,1,2-Tetrachloroethane	---	0.1 U	0.5	0.1	0.1 U	0.5	0.1	0.1 U	0.5	0.1	0.2 U	0.2	0.07	0.1 U	0.5	0.1	0.1 U	0.5	0.1
1,1,2,2-Tetrachloroethane	0.33	0.1 U	0.2	0.1	0.1 U	0.2	0.1	0.1 U	0.2	0.1	0.2 U	0.2	0.07	0.1 U	0.2	0.1	0.1 U	0.2	0.1
Tetrachloroethene	3.3	**0.9**	0.2	0.1	**1.3**	0.2	0.1	**1.3**	0.2	0.1	**0.5**	0.2	0.09	**0.3**	0.2	0.1	**0.4**	0.2	0.1
Toluene	1300	0.1 U	0.2	0.1	0.1 U	0.2	0.1	0.1 U	0.2	0.1	0.2 U	0.2	0.06	0.1 U	0.2	0.1	0.1 U	0.2	0.1
1,1,2-Trichloro-1,2,2-trifuoroethane	59,000	0.2 U	0.5	0.2	0.2 U	0.5	0.2	0.2 U	0.5	0.2	0.2 U	0.2	0.11	0.2 U	0.5	0.2	0.2 U	0.5	0.2
1,2,3-Trichlorobenzene	---	0.1 U	0.5	0.1	0.1 U	0.5	0.1	0.1 U	0.5	0.1	0.5 U	0.5	0.09	0.1 U	0.5	0.1	0.1 U	0.5	0.1

TABLE L-1
GROUNDWATER ANALYTICAL RESULTS
BOEING ISAACSON-THOMPSON
REMEDIAL INVESTIGATION

Location:		IT-DUP-2 (IT-MW-6)			IT-MW-6			IT-DUP-2 (IT-MW-6)			IT-MW-7			IT-MW-7			IT-MW-7		
Laboratory Sample ID:	Preliminary	6697973/6697974/6697975/UZ66F			6789074/6789075/6789076/VJ53J			6789077/6789078/6789079/VJ53K			TZ99A/TZ99D/UA00A/UA00C/UB44A/UB44C			6577001/6577002/UM00A			6693950/6693951/6693952/UZ37C		
Laboratory Data Package ID:	Cleanup	1317686/UZ66			1335688/VJ53			1335688/VJ53			TZ99/UA00/UB44			1295065/UM00			1317022/UZ37		
Sample Date:	Levels	6/21/2012			9/13/2012			9/13/2012			12/05/2011			03/12/2012			6/19/2012		
		Result	Reporting Limit	Detection Limit	Result	Reporting Limit	Detection Limit	Result	Reporting Limit	Detection Limit	Result	Reporting Limit	Detection Limit	Result	Reporting Limit	Detection Limit	Result	Reporting Limit	Detection Limit
1,2,4-Trichlorobenzene	1.13	0.1 U	0.5	0.1	0.1 U	0.5	0.1	0.1 U	0.5	0.1	0.5 U	0.5	0.10	0.1 U	0.5	0.1	0.1 U	0.5	0.1
1,1,1-Trichloroethane	46,000	**0.4** J1	0.5	0.1	**0.6**	0.5	0.1	**0.6**	0.5	0.1	0.2 U	0.2	0.09	0.1 U	0.5	0.1	0.1 U	0.5	0.1
1,1,2-Trichloroethane	2.3	0.1 U	0.2	0.1	0.1 U	0.2	0.1	0.1 U	0.2	0.1	0.2 U	0.2	0.04	0.1 U	0.2	0.1	0.1 U	0.2	0.1
Trichloroethene	1.4	**150**	4.0	2.0	**150**	2.0	1.0	**150**	2.0	1.0	**1.8**	0.2	0.08	**1.4**	0.2	0.1	**1.4**	0.2	0.1
Trichlorofluoromethane	6900	0.1 U	0.5	0.1	0.1 U	0.5	0.1	0.1 U	0.5	0.1	0.2 U	0.2	0.09	0.1 U	0.5	0.1	0.1 U	0.5	0.1
1,2,3-Trichloropropane	---	0.3 U	1.0	0.3	0.3 U	**1.0**	0.3	0.3 U	1.0	0.3	0.5 U	0.5	0.23	0.3 U	1.0	0.3	0.3 U	1.0	0.3
1,2,4-Trimethylbenzene	303	0.1 U	0.5	0.1	0.1 U	0.5	0.1	0.1 U	0.5	0.1	0.2 U	0.2	0.06	0.1 U	0.5	0.1	0.1 U	0.5	0.1
1,3,5-Trimethylbenzene	303	0.1 U	0.5	0.1	0.1 U	0.5	0.1	0.1 U	0.5	0.1	0.2 U	0.2	0.06	0.1 U	0.5	0.1	0.1 U	0.5	0.1
Vinyl Acetate	---	0.2 U	0.5	0.2	0.2 U	0.5	0.2	0.2 U	0.5	0.2	1.0 U	1.0	0.07	0.2 U	0.5	0.2	0.2 U	0.5	0.2
Vinyl Chloride	0.53	**130**	4.0	2.0	**97**	2.0	1.0	**100**	2.0	1.0	0.2 U	0.2	0.08	0.1 U	0.2	0.1	0.1 U	0.2	0.1
m,p-Xylene	1300	0.1 U	0.5	0.1	0.1 U	0.5	0.1	0.1 U	0.5	0.1	0.4 U	0.4	0.14	0.1 U	0.5	0.1	0.1 U	0.5	0.1
o-Xylene	1600	**0.7**	0.5	0.1	0.1 U	0.5	0.1	0.1 U	0.5	0.1	0.2 U	0.2	0.06	0.1 U	0.5	0.1	0.1 U	0.5	0.1
2-Chloroethylvinylether	---	NA	NA	NA	NA	NA	NA	NA	NA	NA	1.0 U	1.0	0.09	NA	NA	NA	NA	NA	NA
Bromoethane	---	NA	NA	NA	NA	NA	NA	NA	NA	NA	0.2 U	0.2	0.09	NA	NA	NA	NA	NA	NA
VOLATILES (µg/L)																			
Method SW8260C-SIM																			
Tetrachloroethene	3.3	**1.0** J	0.020	0.010	**1.3**	0.020	0.010	**1.4**	0.020	0.010	**0.44**	0.020	0.0036	**0.36**	0.020	0.010	**0.38**	0.020	0.010
Vinyl Chloride	0.53	**140**	0.40	0.20	**110**	0.40	0.20	**110**	0.40	0.20	0.020 U	0.020	0.0022	**0.012** J1	0.020	0.010	0.010 U	0.020	0.010
Acrylonitrile	0.057	NA	NA	NA	NA	NA	NA	NA	NA	NA	0.050 U	0.050	0.0158	NA	NA	NA	NA	NA	NA
SEMIVOLATILES (µg/L)																			
Method SW8270D																			
Acenaphthene	120	0.1 U	0.5	0.1	0.1 U	0.5	0.1	0.1 U	0.5	0.1	1.0 U	1.0	0.55	0.1 U	0.5	0.1	0.1 U	0.5	0.1
Acenaphthylene	---	0.1 U	0.5	0.1	0.1 U	0.5	0.1	0.1 U	0.5	0.1	1.0 U	1.0	0.48	0.1 U	0.5	0.1	0.1 U	0.5	0.1
Anthracene	200	0.1 U	0.5	0.1	0.1 U	0.5	0.1	0.1 U	0.5	0.1	1.0 U	1.0	0.53	0.1 U	0.5	0.1	0.1 U	0.5	0.1
Benzo(a)anthracene	0.0018	0.1 U	0.5	0.1	0.1 U	0.5	0.1	0.1 U	0.5	0.1	1.0 U	1.0	0.52	0.1 U	0.5	0.1	0.1 U	0.5	0.1
Benzo(a)pyrene	0.00018	0.1 U	0.5	0.1	0.1 U	0.5	0.1	0.1 U	0.5	0.1	1.0 U	1.0	0.48	0.1 U	0.5	0.1	0.1 U	0.5	0.1
Benzo(b)fluoranthene	0.0018	0.1 U	0.5	0.1	0.1 U	0.5	0.1	0.1 U	0.5	0.1	NA	NA	NA	0.1 U	0.5	0.1	0.1 U	0.5	0.1
Benzo(g,h,i)perylene	---	0.1 U	0.5	0.1	0.1 U	0.5	0.1	0.1 U	0.5	0.1	1.0 U	1.0	0.55	0.1 U	0.5	0.1	0.1 U	0.5	0.1
Benzo(k)fluoranthene	0.0018	0.1 U	0.5	0.1	0.1 U	0.5	0.1	0.1 U	0.5	0.1	NA	NA	NA	0.1 U	0.5	0.1	0.1 U	0.5	0.1
Total Benzofluoranthenes	0.0018	NA	NA	NA	NA	NA	NA	NA	NA	NA	1.0 U	1.0	0.48	NA	NA	NA	NA	NA	NA
Benzoic Acid	2,240	6 U	15	6	6 UJ	15	6	6 UJ	14	6	10 UJ	10	5.1	6 UJ	15	6	6 U	15	6
Benzyl Alcohol	182	5 U	15	5	5 U	15	5	5 U	14	5	5.0 U	5.0	2.0	5 U	15	5	5 U	15	5
4-Bromophenyl-phenylether	---	0.5 U	1	0.5	0.5 U	1	0.5	0.5 U	1	0.5	1.0 U	1.0	0.42	0.5 U	1	0.5	0.5 U	1	0.5
Butylbenzylphthalate	0.41	2 U	5	2	2 U	5	2	2 U	5	2	1.0 U	1.0	0.56	2 U	5	2	2 U	5	2
Di-n-Butylphthalate	47	2 U	5	2	2 U	5	2	2 U	5	2	1.0 U	1.0	0.54	2 U	5	2	2 U	5	2
Carbazole	---	0.5 U	1	0.5	0.5 U	1	0.5	0.5 U	1	0.5	1.0 U	1.0	0.31	0.5 U	1	0.5	0.5 U	1	0.5
4-Chloro-3-methylphenol	3700	0.5 U	1	0.5	0.5 U	1	0.5	0.5 U	1	0.5	5.0 U	5.0	2.4	0.5 U	1	0.5	0.5 U	1	0.5
4-Chloroaniline	---	0.5 U	1	0.5	0.5 U	1	0.5	0.5 U	1	0.5	5.0 U	5.0	2.6	0.5 U	1	0.5	0.5 U	1	0.5
bis(2-Chloroethoxy) Methane	---	0.5 U	1	0.5	0.5 U	1	0.5	0.5 U	1	0.5	1.0 U	1.0	0.56	0.5 U	1	0.5	0.5 U	1	0.5
Bis-(2-Chloroethyl) Ether	---	0.5 U	1	0.5	0.5 U	1	0.5	0.5 U	1	0.5	1.0 U	1.0	0.58	0.5 U	1	0.5	0.5 U	1	0.5
2-Chloronaphthalene	---	0.4 U	1	0.4	0.4 U	1	0.4	0.4 U	1	0.4	1.0 U	1.0	0.48	0.4 U	1	0.4	0.4 U	1	0.4
2-Chlorophenol	---	0.5 U	1	0.5	0.5 U	1	0.5	0.5 U	1	0.5	1.0 U	1.0	0.53	0.5 U	1	0.5	0.5 U	1	0.5
4-Chlorophenyl-phenylether	---	0.5 U	1	0.5	0.5 U	1	0.5	0.5 U	1	0.5	1.0 U	1.0	0.45	0.5 U	1	0.5	0.5 U	1	0.5
2,2'-Oxybis(1-Chloropropane)	---	0.5 U	1	0.5	0.5 U	1	0.5	0.5 U	1	0.5	1.0 U	1.0	0.62	0.5 U	1	0.5	0.5 U	1	0.5
Chrysene	0.018	0.1 U	0.5	0.1	0.1 U	0.5	0.1	0.1 U	0.5	0.1	1.0 U	1.0	0.55	0.1 U	0.5	0.1	0.1 U	0.5	0.1
Dibenz(a,h)anthracene	0.0018	0.1 U	0.5	0.1	0.1 U	0.5	0.1	0.1 U	0.5	0.1	1.0 U	1.0	0.48	0.1 U	0.5	0.1	0.1 U	0.5	0.1
Dibenzofuran	1.3	0.5 U	1	0.5	0.5 U	1	0.5	0.5 U	1	0.5	1.0 U	1.0	0.48	0.5 U	1	0.5	0.5 U	1	0.5
1,2-Dichlorobenzene	440	0.5 U	1	0.5	0.5 U	1	0.5	0.5 U	1	0.5	1.0 U	1.0	0.36	0.5 U	1	0.5	0.5 U	1	0.5
1,3-Dichlorobenzene	---	0.5 U	1	0.5	0.5 U	1	0.5	0.5 U	1	0.5	1.0 U	1.0	0.36	0.5 U	1	0.5	0.5 U	1	0.5
1,4-Dichlorobenzene	1.7	0.5 U	1	0.5	0.5 U	1	0.5	0.5 U	1	0.5	1.0 U	1.0	0.40	0.5 U	1	0.5	0.5 U	1	0.5
3,3'-Dichlorobenzidine	---	2 U	5	2	2 U	5	2	2 U	5	2	5.0 U	5.0	1.5	2 U	5	2	2 U	5	2
2,4-Dichlorophenol	---	0.5 U	1	0.5	0.5 U	1	0.5	0.5 U	1	0.5	5.0 U	5.0	2.6	0.5 U	1	0.5	0.5 U	1	0.5
Diethylphthalate	4,236	2 U	5	2	2 U	5	2	2 U	5	2	1.0 U	1.0	0.58	2 U	5	2	2 U	5	2
2,4-Dimethylphenol	660	0.5 U	1	0.5	0.5 U	1	0.5	0.5 U	1	0.5	1.0 U	1.0	0.36	0.5 U	1	0.5	0.5 U	1	0.5
Dimethylphthalate	1,100,000	2 U	5	2	2 U	5	2	2 U	5	2	1.0 U	1.0	0.53	2 U	5	2	2 U	5	2
4,6-Dinitro-2-Methylphenol	---	5 U	15	5	5 U	15	5	5 U	14	5	10 U	10	3.1	5 U	15	5	5 U	15	5
2,4-Dinitrophenol	---	10 U	31	10	10 U	29	10	10 U	29	10	10 U	10	3.5	10 U	29	10	10 U	30	10
2,4-Dinitrotoluene	---	1 U	5	1	1 U	5	1	1 U	5	1	5.0 U	5.0	2.5	1 U	5	1	1 U	5	1
2,6-Dinitrotoluene	---	0.5 U	1	0.5	0.5 U	1	0.5	0.5 U	1	0.5	5.0 U	5.0	2.4	0.5 U	1	0.5	0.5 U	1	0.5
bis(2-Ethylhexyl)phthalate	1.2	2 U	5	2	2 U	5	2	2 U	5	2	1.0 U	1.0	1.9	2 U	5	2	2 U	5	2

TABLE L-1
GROUNDWATER ANALYTICAL RESULTS
BOEING ISAACSON-THOMPSON
REMEDIAL INVESTIGATION

Location:		IT-DUP-2 (IT-MW-6)			IT-MW-6			IT-DUP-2 (IT-MW-6)			IT-MW-7			IT-MW-7			IT-MW-7		
Laboratory Sample ID:	Preliminary	6697973/6697974/6697975/UZ66F			6789074/6789075/6789076/VJ53J			6789077/6789078/6789079/VJ53K			TZ99A/TZ99D/UA00A/UA00C/UB44A/UB44C			6577001/6577002/UM00A			6693950/6693951/6693952/UZ37C		
Laboratory Data Package ID:	Cleanup	1317686/UZ66			1335688/VJ53			1335688/VJ53			TZ99/UA00/UB44			1295065/UM00			1317022/UZ37		
Sample Date:	Levels	6/21/2012			9/13/2012			9/13/2012			12/05/2011			03/12/2012			6/19/2012		
		Result	Reporting Limit	Detection Limit	Result	Reporting Limit	Detection Limit	Result	Reporting Limit	Detection Limit	Result	Reporting Limit	Detection Limit	Result	Reporting Limit	Detection Limit	Result	Reporting Limit	Detection Limit
Fluoranthene	11	0.1 U	0.5	0.1	0.1 U	0.5	0.1	0.1 U	0.5	0.1	1.0 U	1.0	0.52	0.1 U	0.5	0.1	0.1 U	0.5	0.1
Fluorene	45	0.1 U	0.5	0.1	0.1 U	0.5	0.1	0.1 U	0.5	0.1	1.0 U	1.0	0.56	0.1 U	0.5	0.1	0.1 U	0.5	0.1
Hexachlorobenzene	---	0.1 U	0.5	0.1	0.1 U	0.5	0.1	0.1 U	0.5	0.1	1.0 U	1.0	0.47	0.1 U	0.5	0.1	0.1 U	0.5	0.1
Hexachlorobutadiene	---	0.5 U	1	0.5	0.5 U	1	0.5	0.5 U	1	0.5	1.0 U	1.0	0.31	0.5 U	1	0.5	0.5 U	1	0.5
Hexachlorocyclopentadiene	---	5 U	15	5	5 U	15	5	5 U	14	5	5.0 U	5.0	1.2	5 U	15	5	5 U	15	5
Hexachloroethane	---	1 U	5	1	1 U	5	1	1 U	5	1	1.0 U	1.0	0.35	1 U	5	1	1 U	5	1
Indeno(1,2,3-cd)pyrene	0.0018	0.1 U	0.5	0.1	0.1 U	0.5	0.1	0.1 U	0.5	0.1	1.0 U	1.0	0.48	0.1 U	0.5	0.1	0.1 U	0.5	0.1
Isophorone	---	0.5 U	1	0.5	0.5 U	1	0.5	0.5 U	1	0.5	1.0 U	1.0	0.48	0.5 U	1	0.5	0.5 U	1	0.5
1-Methylnaphthalene	2.3	0.1 U	0.5	0.1	0.1 U	0.5	0.1	0.1 U	0.5	0.1	1.0 U	1.0	0.48	0.1 U	0.5	0.1	0.1 U	0.5	0.1
2-Methylnaphthalene	64	0.1 U	0.5	0.1	0.1 U	0.5	0.1	0.1 U	0.5	0.1	1.0 U	1.0	0.48	0.1 U	0.5	0.1	0.1 U	0.5	0.1
2-Methylphenol	3100	0.5 U	1	0.5	0.5 U	1	0.5	0.5 U	1	0.5	1.0 U	1.0	0.53	0.5 U	1	0.5	0.5 U	1	0.5
4-Methylphenol	330	0.5 U	1	0.5	0.5 U	1	0.5	0.5 U	1	0.5	1.0 U	1.0	0.52	0.5 U	1	0.5	0.5 U	1	0.5
Naphthalene	26	0.1 U	0.5	0.1	0.1 U	0.5	0.1	**0.1** J1	0.5	0.1	1.0 U	1.0	0.52	0.1 U	0.5	0.1	0.1 U	0.5	0.1
2-Nitroaniline	---	0.5 U	1	0.5	0.5 U	1	0.5	0.5 U	1	0.5	5.0 U	5.0	2.6	0.5 U	1	0.5	0.5 U	1	0.5
3-Nitroaniline	---	0.5 U	1	0.5	0.5 U	1	0.5	0.5 U	1	0.5	5.0 U	5.0	2.3	0.5 U	1	0.5	0.5 U	1	0.5
4-Nitroaniline	---	0.5 U	1	0.5	0.5 U	1	0.5	0.5 U	1	0.5	5.0 U	5.0	2.2	0.5 U	1	0.5	0.5 U	1	0.5
Nitrobenzene	---	0.5 U	1	0.5	0.5 U	1	0.5	0.5 U	1	0.5	1.0 U	1.0	0.58	0.5 U	1	0.5	0.5 U	1	0.5
2-Nitrophenol	---	0.5 U	1	0.5	0.5 U	1	0.5	0.5 U	1	0.5	5.0 U	5.0	2.0	0.5 U	1	0.5	0.5 U	1	0.5
4-Nitrophenol	---	10 U	31	10	10 U	29	10	10 U	29	10	5.0 U	5.0	2.6	10 U	29	10	10 U	30	10
N-Nitroso-Di-N-Propylamine	---	0.5 U	1	0.5	0.5 U	1	0.5	0.5 U	1	0.5	1.0 U	1.0	0.56	0.5 U	1	0.5	0.5 U	1	0.5
N-Nitrosodiphenylamine	1.96	0.5 U	1	0.5	0.5 U	1	0.5	0.5 U	1	0.5	1.0 U	1.0	0.46	0.5 U	1	0.5	0.5 U	1	0.5
Di-n-Octyl phthalate	---	2 U	5	2	2 U	5	2	2 U	5	2	1.0 U	1.0	0.51	2 U	5	2	2 U	5	2
Pentachlorophenol	---	1 U	5	1	1 UJ	5	1	1 UJ	5	1	5.0 U	5.0	2.4	1 U	5	1	1 U	5	1
Phenanthrene	---	0.1 U	0.5	0.1	0.1 U	0.5	0.1	0.1 U	0.5	0.1	1.0 U	1.0	0.56	0.1 U	0.5	0.1	0.1 U	0.5	0.1
Phenol	41,000	0.5 U	1	0.5	0.5 U	1	0.5	0.5 U	1	0.5	1.0 U	1.0	0.52	0.5 U	1	0.5	0.5 U	1	0.5
Pyrene	9.8	0.1 U	0.5	0.1	0.1 U	0.5	0.1	0.1 U	0.5	0.1	1.0 U	1.0	0.55	0.1 U	0.5	0.1	0.1 U	0.5	0.1
1,2,4-Trichlorobenzene	1.13	0.5 U	1	0.5	0.5 U	1	0.5	0.5 U	1	0.5	1.0 U	1.0	0.38	0.5 U	1	0.5	0.5 U	1	0.5
2,4,5-Trichlorophenol	---	0.5 U	1	0.5	0.5 U	1	0.5	0.5 U	1	0.5	5.0 U	5.0	2.2	0.5 U	1	0.5	0.5 U	1	0.5
2,4,6-Trichlorophenol	---	0.5 U	1	0.5	0.5 U	1	0.5	0.5 U	1	0.5	5.0 U	5.0	2.4	0.5 U	1	0.5	0.5 U	1	0.5
cPAHs (µg/L)																			
Method SW8270D-SIM																			
Benzo(a)anthracene	0.0018	0.0052 U	0.010	0.0052	0.0049 U	0.0097	0.0049	0.0048 U	0.0095	0.0048	0.010 U	0.010	0.0063	0.0048 U	0.0096	0.0048	0.0050 U	0.010	0.0050
Benzo(a)pyrene	0.00018	0.0052 U	0.010	0.0052	0.0049 U	0.0097	0.0049	0.0048 U	0.0095	0.0048	0.010 U	0.010	0.0048	0.0048 U	0.0096	0.0048	0.0050 U	0.010	0.0050
Benzo(b)fluoranthene	0.0018	0.0052 U	0.010	0.0052	0.0049 U	0.0097	0.0049	0.0048 U	0.0095	0.0048	NA	NA	NA	0.0048 U	0.0096	0.0048	0.0050 U	0.010	0.0050
Benzo(k)fluoranthene	0.0018	0.0052 U	0.010	0.0052	0.0049 U	0.0097	0.0049	0.0048 U	0.0095	0.0048	NA	NA	NA	0.0048 U	0.0096	0.0048	0.0050 U	0.010	0.0050
Total Benzofluoranthenes	0.0018	NA	NA	NA	NA	NA	NA	NA	NA	NA	0.020 UJ	0.020	0.0099	NA	NA	NA	NA	NA	NA
Chrysene	0.018	0.0052 U	0.010	0.0052	0.0049 U	0.0097	0.0049	0.0048 U	0.0095	0.0048	0.010 U	0.010	0.0046	0.0048 U	0.0096	0.0048	0.0050 U	0.010	0.0050
Dibenz(a,h)anthracene	0.0018	0.0041 U	0.010	0.0041	0.0039 U	0.0097	0.0039	0.0038 U	0.0095	0.0038	0.010 U	0.010	0.0048	0.0039 U	0.0096	0.0039	0.0040 U	0.010	0.0040
Indeno(1,2,3-cd)pyrene	0.0018	0.004 U	0.01	0.004	0.0039 U	0.0097	0.0039	0.0038 U	0.0095	0.0038	0.010 U	0.010	0.0046	0.0039 U	0.0096	0.0039	0.0040 U	0.010	0.0040
Pyrene	9.8	0.010 U	0.051	0.010	0.0097 U	0.049	0.0097	0.0095 U	0.048	0.0095	NA	NA	NA	0.0096 U	0.048	0.0096	0.010 U	0.050	0.010
cPAH TEQ	0.00018	ND	NA	NA	ND	NA	NA	ND	NA	NA	ND	NA	NA	ND	NA	NA	ND	NA	NA
PCBs (µg/L)																			
Method SW8082																			
Aroclor 1016	0.000023	0.0063 U	0.010	0.0063	0.0058 U	0.0097	0.0058	0.0059 U	0.0099	0.0059	0.010 U	0.010	0.0025	0.0059 U	0.0098	0.0059	0.0059 U	0.0099	0.0059
Aroclor 1221	---	0.0063 U	0.010	0.0063	0.0058 U	0.0097	0.0058	0.0059 U	0.0099	0.0059	0.010 U	0.010	0.0028	0.0059 U	0.0098	0.0059	0.0059 U	0.0099	0.0059
Aroclor 1232	---	0.0073 U	0.010	0.0073	0.0068 U	0.0097	0.0068	0.0069 U	0.0099	0.0069	0.010 U	0.010	0.0028	0.0069 U	0.0098	0.0069	0.0069 U	0.0099	0.0069
Aroclor 1242	0.000023	0.0063 U	0.010	0.0063	0.0058 U	0.0097	0.0058	0.0059 U	0.0099	0.0059	0.010 U	0.010	0.0028	0.0059 U	0.0098	0.0059	0.0059 U	0.0099	0.0059
Aroclor 1248	0.000023	0.0052 U	0.010	0.0052	0.0048 U	0.0097	0.0048	0.0049 U	0.0099	0.0049	0.010 U	0.010	0.0028	0.0049 U	0.0098	0.0049	0.0050 U	0.0099	0.0050
Aroclor 1254	0.0000055	0.0052 U	0.010	0.0052	0.0048 U	0.0097	0.0048	0.0049 U	0.0099	0.0049	0.010 U	0.010	0.0028	0.0049 U	0.0098	0.0049	0.0050 U	0.0099	0.0050
Aroclor 1260	0.000023	0.0052 U	0.010	0.0052	0.0048 U	0.0097	0.0048	0.0049 U	0.0099	0.0049	0.010 U	0.010	0.0028	0.0049 U	0.0098	0.0049	0.0050 U	0.0099	0.0050
Total PCBs	0.000023	ND	NA	NA	ND	NA	NA	ND	NA	NA	ND	NA	NA	ND	NA	NA	ND	NA	NA

TABLE L-1
GROUNDWATER ANALYTICAL RESULTS
BOEING ISAACSON-THOMPSON
REMEDIAL INVESTIGATION

Location:		IT-DUP-2 (IT-MW-6)			IT-MW-6			IT-DUP-2 (IT-MW-6)			IT-MW-7			IT-MW-7			IT-MW-7		
Laboratory Sample ID:	Preliminary	6697973/6697974/6697975/UZ66F			6789074/6789075/6789076/VJ53J			6789077/6789078/6789079/VJ53K			TZ99A/TZ99D/UA00A/UA00C/UB44A/UB44C			6577001/6577002/UM00A			6693950/6693951/6693952/UZ37C		
Laboratory Data Package ID:	Cleanup	1317686/UZ66			1335688/VJ53			1335688/VJ53			TZ99/UA00/UB44			1295065/UM00			1317022/UZ37		
Sample Date:	Levels	6/21/2012			9/13/2012			9/13/2012			12/05/2011			03/12/2012			6/19/2012		
		Result	Reporting Limit	Detection Limit	Result	Reporting Limit	Detection Limit	Result	Reporting Limit	Detection Limit	Result	Reporting Limit	Detection Limit	Result	Reporting Limit	Detection Limit	Result	Reporting Limit	Detection Limit
TOTAL PETROLEUM HYDROCARBONS (mg/L)																			
NWTPH-Dx																			
Diesel-Range Organics	0.5	0.030 U	0.10	0.03	0.028 U	0.095	0.028	0.029 U	0.098	0.029	0.10 U	0.10	0.022	0.068 U	0.24	0.068	0.030 U	0.099	0.030
Oil-Range Organics	0.5	0.071 U	0.25	0.071	0.066 U	0.240	0.066	0.068 U	0.240	0.068	0.20 U	0.20	0.044	0.97 U	2.9	0.97	0.070 U	0.250	0.070
NWTPH-G																			
Gasoline-Range Organics	1.0/0.8	0.05 U	0.25	0.05	0.05 U	0.25	0.05	0.05 U	0.25	0.05	0.25 U	0.25	0.06	0.05 U	0.25	0.05	0.05 U	0.25	0.05
TOTAL METALS (µg/L)																			
Method 200.8																			
Antimony	---	0.33 U	1.0	0.33	0.33 U	1.0	0.33	0.33 U	1.0	0.33	0.2 U	0.2	0.010	0.42 U	1.0	0.42	0.33 U	1.0	0.33
Arsenic	---	**0.99** J1	2.0	0.20	**1.0** J1	2.0	0.40	**0.68** J1	2.0	0.40	**3.5**	0.2	0.048	**9.0**	2.0	0.95	**3.1**	2.0	0.20
Barium	---	**44.4**	2.0	0.41	**52.6**	2.0	0.41	**56.0**	2.0	0.41	**30.0**	0.5	0.020	**9.1**	2.0	0.69	**13.6**	2.0	0.41
Beryllium	---	**0.035** J1	0.50	0.025	**0.027** J1	0.50	0.025	**0.031** J1	0.50	0.025	0.2 U	0.2	0.021	0.13 U	0.50	0.13	**0.026** J1	0.50	0.025
Cadmium	---	0.048 U	0.50	0.048	0.082 U	0.50	0.082	0.082 U	0.50	0.082	0.1 U	0.1	0.010	0.20 U	0.50	0.20	0.048 U	0.50	0.048
Chromium	---	**0.52** J1	2.0	0.50	**0.62** J1	2.0	0.50	**0.73** J1	2.0	0.50	0.5 U	0.5	0.045	0.60 U	2.0	0.60	0.50 U	2.0	0.50
Copper	---	**1.1** J1	2.0	0.15	**0.45** J1	2.0	0.40	**0.46** J1	2.0	0.40	**2.0**	0.5	0.158	**2.4**	2.0	0.38	**1.5** J1	2.0	0.15
Lead	---	0.034 U	1.0	0.034	0.034 U	1.0	0.034	**0.035** J1	1.0	0.034	0.1 U	0.1	0.046	**0.094** J1	1.0	0.080	**0.042** J1	1.0	0.034
Nickel	---	**2.4**	2.0	0.13	**2.6**	2.0	0.35	**3.9**	2.0	0.35	**2.9**	0.5	0.079	**1.9** J1	2.0	0.50	**2.6**	2.0	0.13
Selenium	---	**0.21** J1	2.0	0.18	0.50 U	2.0	0.50	0.50 U	2.0	0.50	**0.5**	0.5	0.127	**0.42** J1	2.0	0.27	**0.75** J1	2.0	0.18
Silver	---	0.10 U	0.50	0.10	0.10 U	0.50	0.10	0.10 U	0.50	0.10	0.2 U	0.2	0.008	0.098 U	0.50	0.098	0.10 U	0.50	0.10
Thallium	---	0.029 U	0.50	0.029	0.15 U	0.50	0.15	0.15 U	0.50	0.15	0.2 U	0.2	0.004	0.15 U	0.50	0.15	**0.050** J1	0.50	0.029
Zinc	---	**7.2** J1	15.0	1.1	**8.6** J1	15.0	1.1	**9.4** J1	15.0	1.1	**4**	4	0.50	4.0 U	15.0	4.0	**2.1** J1	15.0	1.1
Method SW7196A (mg/L)																			
Chromium VI	0.00058	0.010 U	0.010	0.00300	0.010 U	0.010	0.00300	0.010 U	0.010	0.00300	0.010 UJ	0.010	0.00300	0.010 U	0.010	0.00300	0.010 U	0.010	0.00300
Method SW7470A/EPA 1631E (ng/L)																			
Mercury	12	**1.12**	0.500	0.160	**0.950**	0.500	0.160	1.60 U	5.00	1.60	20.0 U	20.0	2.60	**4.29**	5.00	1.60	**1.77**	0.500	0.160
DISSOLVED METALS (µg/L)																			
Methods 200.8/SW7196A																			
Antimony	150	0.33 U	1.0	0.33	0.33 U	1.0	0.33	0.33 U	1.0	0.33	0.2 U	0.2	0.010	0.42 U	1.0	0.42	0.33 U	1.0	0.33
Arsenic	8	**0.64** J1	2.0	0.20	**2.7**	2.0	0.40	**0.74** J1	2.0	0.40	**3.6**	0.2	0.048	**8.7**	2.0	0.95	**3.6**	2.0	0.20
Barium	770	**46.4**	2.0	0.41	**50.8**	2.0	0.41	**56.1**	2.0	0.41	**29.0**	0.5	0.020	**8.6**	2.0	0.69	**12.2**	2.0	0.41
Beryllium	12	0.025 U	0.50	0.025	**0.027** J1	0.50	0.025	**0.044** J1	0.50	0.025	0.2 U	0.2	0.021	0.13 U	0.50	0.13	**0.027** J1	0.50	0.025
Cadmium	0.25	0.048 U	0.50	0.048	0.082 U	0.50	0.082	0.082 U	0.50	0.082	0.1 U	0.1	0.010	0.20 U	0.50	0.20	0.048 U	0.50	0.048
Chromium	74	**0.57** J1	2.0	0.50	**0.65** J1	2.0	0.50	**0.59** J1	2.0	0.50	0.5 U	0.5	0.045	0.60 U	2.0	0.60	0.50 U	2.0	0.50
Copper	8	**0.68** J1	2.0	0.15	0.40 U	2.0	0.40	0.40 U	2.0	0.40	**2.1** J	0.5	0.158	**2.6**	2.0	0.38	**2.0**	2.0	0.15
Lead	2.5	0.034 U	1.0	0.034	0.034 U	1.0	0.034	**0.17** J1	1.0	0.034	0.1 U	0.1	0.046	0.080 U	1.0	0.080	0.034 U	1.0	0.034
Nickel	8.2	**2.3**	2.0	0.13	**3.1**	2.0	0.35	**3.5**	2.0	0.35	**2.6**	0.5	0.079	**1.7** J1	2.0	0.50	**2.6**	2.0	0.13
Selenium	5	0.18 U	2.0	0.18	0.50 U	2.0	0.50	0.50 U	2.0	0.50	0.5 U	0.5	0.127	**0.43** J1	2.0	0.27	**0.69** J1	2.0	0.18
Silver	22	0.10 U	0.50	0.10	0.10 U	0.50	0.10	0.10 U	0.50	0.10	0.2 U	0.2	0.008	0.098 U	0.50	0.098	0.10 U	0.50	0.10
Thallium	0.47	0.029 U	0.50	0.029	0.15 U	0.50	0.15	0.15 U	0.50	0.15	0.2 U	0.2	0.004	0.15 U	0.50	0.15	0.029 U	0.50	0.029
Zinc	56	**9.3** J1	15.0	1.1	**8.5** J1	15.0	1.1	**8.1** J1	15.0	1.1	**10**	4	0.50	**4.3** J1	15.0	4.0	**4.5** J1	15.0	1.1
Method SW7470A/EPA 1631E (ng/L)																			
Mercury	12	**0.791**	0.500	0.160	**3.62** J1	5.00	1.60	**1.98** J1	5.00	1.60	20.0 U	20.0	2.60	**4.09**	5.00	1.60	**2.20**	0.500	0.160
CONVENTIONALS (mg/L)																			
Chloride (Method 300.0)	---	**4.4**	0.40	0.20	**4.8**	0.40	0.20	**4.8**	0.40	0.20	NA	NA	NA	NA	NA	NA	**18.4**	2.0	1.0
Nitrate (Method 300.0)	---	0.050 U	0.10	0.050	**0.060** J1	0.10	0.050	**0.052** J1	0.10	0.050	**1.2**	0.1	0.007	**1.2**	0.10	0.050	**0.97**	0.10	0.050
Sulfate (Method 300.0)	---	**22.9** J	5.0	1.5	**30.4**	5.0	1.5	**30.7**	5.0	1.5	**22.7**	1.0	0.590	**20.9** J	5.0	1.5	**34.2**	5.0	1.5
Total Dissolved Solids (Method 160.1)	---	**325**	30.0	9.7	**302**	30.0	9.7	**304**	30.0	9.7	**194**	5.0	5.00	**167**	30.0	9.7	**230** J	30.0	9.7
FIELD PARAMETERS																			
Temperature (°C)	---	16.01	NA	NA	20.96	NA	NA	20.96	NA	NA	14.47	NA	NA	12.95	NA	NA	13.13	NA	NA
Conductivity (uS/cm)	---	408	NA	NA	3985	NA	NA	3985	NA	NA	517	NA	NA	176	NA	NA	243	NA	NA
Dissolved Oxygen (mg/L)	---	0.47	NA	NA	0.74	NA	NA	0.74	NA	NA	1.36	NA	NA	1.81	NA	NA	3.19	NA	NA
pH (SU)	---	7.43	NA	NA	6.17	NA	NA	6.17	NA	NA	5.15	NA	NA	6.99	NA	NA	5.48	NA	NA
ORP (mV)	---	59.2	NA	NA	33	NA	NA	33	NA	NA	112.68	NA	NA	-67.7	NA	NA	9.1	NA	NA
Turbidity (NTU)	---	3.75	NA	NA	64.7	NA	NA	64.7	NA	NA	1.71	NA	NA	9.9	NA	NA	3.18	NA	NA
Ferrous Iron (mg/L)	---	0.6	NA	NA	1.6	NA	NA	1.6	NA	NA	NA	NA	NA	0.6	NA	NA	0.0	NA	NA

TABLE L-1
GROUNDWATER ANALYTICAL RESULTS
BOEING ISAACSON-THOMPSON
REMEDIAL INVESTIGATION

Location:		IT-MW-7			IT-MW-8			IT-MW-8			IT-MW-8			IT-MW-8			IT-MW-9		
Laboratory Sample ID:	Preliminary	6790515/6790516/6790517/VJ63F			UA54C/UA54L/UA55C/UA55K/UB47C/UB47K			6572519/6572520/UL36E			6690477/6690478/6690479/UZ00C			6788024/6788025/6788026/VJ32H			UA27E/UA27M/UA28E/UA28L/UB45E/UB45L		
Laboratory Data Package ID:	Cleanup	1335985/VJ63			UA54/UA55/UB47			1294218/UL36			1316296/UZ00			1335483/VJ32			UA27/UA28/UB45		
Sample Date:	Levels	9/14/2012			12/08/2011			03/08/2012			6/15/2012			9/12/2012			12/06/2011		
		Result	Reporting Limit	Detection Limit	Result	Reporting Limit	Detection Limit	Result	Reporting Limit	Detection Limit	Result	Reporting Limit	Detection Limit	Result	Reporting Limit	Detection Limit	Result	Reporting Limit	Detection Limit
VOLATILES (µg/L)																			
Method SW8260C																			
Acetone	110,000	3.0 U	5.0	3.0	5.0 U	5.0	2.1	3.0 U	5.0	3.0	3.0 U	5.0	3.0	3.0 U	5.0	3.0	1.7 UJ2	5.0	0.72
Acrolein	---	5.0 U	25	5.0	5.0 UJ	5.0	2.5	5.0 U	25	5.0	5.0 U	25	5.0	5.0 U	25	5.0	5.0 UJ	5.0	0.29
Acrylonitrile	0.057	1.0 U	5.0	1.0	1.0 U	1.0	0.60	1.0 U	5.0	1.0	1.0 U	5.0	1.0	1.0 U	5.0	1.0	1.0 U	1.0	0.18
Benzene	2	0.1 U	0.2	0.1	0.2 U	0.2	0.03	0.1 U	0.2	0.1	0.1 U	0.2	0.1	0.1 U	0.2	0.1	0.2 U	0.2	0.06
Bromobenzene	---	0.1 U	0.5	0.1	0.2 U	0.2	0.06	0.1 U	0.5	0.1	0.1 U	0.5	0.1	0.1 U	0.5	0.1	0.2 U	0.2	0.05
Bromochloromethane	---	0.1 U	0.5	0.1	0.2 U	0.2	0.06	0.1 U	0.5	0.1	0.1 U	0.5	0.1	0.1 U	0.5	0.1	0.2 U	0.2	0.07
Bromodichloromethane	17	0.1 U	0.5	0.1	0.2 U	0.2	0.05	0.1 U	0.5	0.1	0.1 U	0.5	0.1	0.1 U	0.5	0.1	0.2 U	0.2	0.05
Bromoform	---	0.1 U	0.5	0.1	0.2 U	0.2	0.06	0.1 U	0.5	0.1	0.1 U	0.5	0.1	0.1 U	0.5	0.1	0.2 U	0.2	0.07
Bromomethane	---	0.1 U	0.5	0.1	1.0 U	1.0	0.25	0.1 U	0.5	0.1	0.1 UJ	0.5	0.1	0.1 U	0.5	0.1	1.0 U	1.0	0.04
2-Butanone	73,000	1.0 U	5.0	1.0	5.0 UJ	5.0	0.81	1.0 U	5.0	1.0	1.0 U	5.0	1.0	1.0 U	5.0	1.0	5.0 U	5.0	0.81
n-Butylbenzene	780	0.1 U	0.5	0.1	0.2 U	0.2	0.02	0.1 U	0.5	0.1	0.1 U	0.5	0.1	0.1 U	0.5	0.1	0.2 U	0.2	0.11
sec-Butylbenzene	---	0.1 U	0.5	0.1	0.2 U	0.2	0.02	0.1 U	0.5	0.1	0.1 U	0.5	0.1	0.1 U	0.5	0.1	0.2 U	0.2	0.08
tert-Butylbenzene	---	0.1 U	0.5	0.1	0.2 U	0.2	0.03	0.1 U	0.5	0.1	0.1 U	0.5	0.1	0.1 U	0.5	0.1	0.2 U	0.2	0.06
Carbon Disulfide	3900	0.4 U	0.5	0.4	0.2 U	0.2	0.04	0.4 U	0.5	0.4	0.4 U	0.5	0.4	0.4 U	0.5	0.4	0.2 U	0.2	0.09
Carbon Tetrachloride	0.46	0.1 U	0.2	0.1	0.2 U	0.2	0.04	0.1 U	0.2	0.1	0.1 U	0.2	0.1	0.1 U	0.2	0.1	0.2 U	0.2	0.08
Chlorobenzene	270	0.1 U	0.5	0.1	0.2 U	0.2	0.02	0.1 U	0.5	0.1	0.1 U	0.5	0.1	0.1 U	0.5	0.1	0.2 U	0.2	0.04
Chloroethane	21,000	0.1 U	0.5	0.1	0.2 U	0.2	0.09	0.1 U	0.5	0.1	0.1 U	0.5	0.1	0.1 U	0.5	0.1	0.2 U	0.2	0.15
Chloroform	9.4	0.1 U	0.2	0.1	0.2 U	0.2	0.03	0.1 U	0.2	0.1	0.1 U	0.2	0.1	0.1 U	0.2	0.1	0.2 U	0.2	0.08
Chloromethane	10.3	0.2 U	0.5	0.2	0.5 U	0.5	0.10	0.2 U	0.5	0.2	0.2 U	0.5	0.2	0.2 U	0.5	0.2	0.5 U	0.5	0.10
2-Chlorotoluene	---	0.1 U	0.5	0.1	0.2 U	0.2	0.02	0.1 U	0.5	0.1	0.1 U	0.5	0.1	0.1 U	0.5	0.1	0.2 U	0.2	0.04
4-Chlorotoluene	2600	0.1 U	0.5	0.1	0.2 U	0.2	0.02	0.1 U	0.5	0.1	0.1 U	0.5	0.1	0.1 U	0.5	0.1	0.2 U	0.2	0.07
1,2-Dibromo-3-chloropropane	---	0.2 U	0.5	0.2	0.5 U	0.5	0.04	0.2 U	0.5	0.2	0.2 U	0.5	0.2	0.2 U	0.5	0.2	0.5 UJ	0.5	0.21
Dibromochloromethane	---	0.1 U	0.5	0.1	0.2 U	0.2	0.05	0.1 U	0.5	0.1	0.1 U	0.5	0.1	0.1 U	0.5	0.1	0.2 U	0.2	0.09
Dibromomethane	---	0.1 U	0.5	0.1	0.2 U	0.2	0.14	0.1 U	0.5	0.1	0.1 U	0.5	0.1	0.1 U	0.5	0.1	0.2 U	0.2	0.08
trans-1,4-Dichloro-2-butene	---	1.0 U	5.0	1.0	1.0 UJ	1.0	0.32	1.0 U	5.0	1.0	1.0 U	5.0	1.0	1.0 U	5.0	1.0	1.0 UJ	1.0	0.24
1,2-Dichlorobenzene	440	0.1 U	0.5	0.1	0.2 U	0.2	0.04	0.1 U	0.5	0.1	0.1 U	0.5	0.1	0.1 U	0.5	0.1	0.2 U	0.2	0.06
1,3-Dichlorobenzene	960	0.1 U	0.5	0.1	0.2 U	0.2	0.04	0.1 U	0.5	0.1	0.1 U	0.5	0.1	0.1 U	0.5	0.1	0.2 U	0.2	0.04
1,4-Dichlorobenzene	1.7	0.1 U	0.5	0.1	0.2 U	0.2	0.04	0.1 U	0.5	0.1	0.1 U	0.5	0.1	0.1 U	0.5	0.1	0.2 U	0.2	0.06
1,1-Dichloroethane	33	0.1 U	0.5	0.1	0.2 U	0.2	0.05	0.1 U	0.5	0.1	0.1 U	0.5	0.1	0.1 U	0.5	0.1	0.2 U	0.2	0.05
1,2-Dichloroethane	3.6	0.1 U	0.2	0.1	0.2 U	0.2	0.07	0.1 U	0.2	0.1	0.1 U	0.2	0.1	0.1 U	0.2	0.1	0.2 U	0.2	0.08
1,1-Dichloroethene	3.2	0.1 U	0.2	0.1	0.2 U	0.2	0.05	0.1 U	0.2	0.1	0.1 U	0.2	0.1	0.1 U	0.2	0.1	0.2 U	0.2	0.09
cis-1,2-Dichloroethene	130	**1.2**	0.2	0.1	0.2 U	0.2	0.04	0.1 U	0.2	0.1	0.1 U	0.2	0.1	0.1 U	0.2	0.1	0.2 U	0.2	0.10
trans-1,2-Dichloroethene	940	0.1 U	0.2	0.1	0.2 U	0.2	0.05	0.1 U	0.2	0.1	0.1 U	0.2	0.1	0.1 U	0.2	0.1	0.2 U	0.2	0.08
1,2-Dichloropropane	3.7	0.1 U	0.5	0.1	0.2 U	0.2	0.04	0.1 U	0.5	0.1	0.1 U	0.5	0.1	0.1 U	0.5	0.1	0.2 U	0.2	0.09
1,3-Dichloropropane	---	0.1 U	0.5	0.1	0.2 U	0.2	0.06	0.1 U	0.5	0.1	0.1 U	0.5	0.1	0.1 U	0.5	0.1	0.2 U	0.2	0.02
2,2-Dichloropropane	---	0.1 U	0.5	0.1	0.2 U	0.2	0.05	0.1 U	0.5	0.1	0.1 U	0.5	0.1	0.1 U	0.5	0.1	0.2 U	0.2	0.08
1,1-Dichloropropene	---	0.1 U	0.5	0.1	0.2 U	0.2	0.03	0.1 U	0.5	0.1	0.1 U	0.5	0.1	0.1 U	0.5	0.1	0.2 U	0.2	0.09
cis-1,3-Dichloropropene	---	0.1 U	0.2	0.1	0.2 U	0.2	0.06	0.1 U	0.2	0.1	0.1 U	0.2	0.1	0.1 U	0.2	0.1	0.2 U	0.2	0.06
trans-1,3-Dichloropropene	---	0.1 U	0.2	0.1	0.2 U	0.2	0.08	0.1 U	0.2	0.1	0.1 U	0.2	0.1	0.1 U	0.2	0.1	0.2 U	0.2	0.06
Ethylbenzene	1.7	0.1 U	0.5	0.1	0.2 U	0.2	0.04	0.1 U	0.5	0.1	0.1 U	0.5	0.1	0.1 U	0.5	0.1	0.2 U	0.2	0.09
Ethylene Dibromide	---	0.1 U	0.5	0.1	0.2 U	0.2	0.08	0.1 U	0.5	0.1	0.1 U	0.5	0.1	0.1 U	0.5	0.1	0.2 U	0.2	0.08
Hexachlorobutadiene	---	0.1 U	0.5	0.1	0.5 U	0.5	0.07	0.1 U	0.5	0.1	0.1 U	0.5	0.1	0.1 U	0.5	0.1	0.5 U	0.5	0.11
2-Hexanone	3200	1.0 U	5.0	1.0	5.0 U	5.0	0.90	1.0 U	5.0	1.0	1.0 U	5.0	1.0	1.0 U	5.0	1.0	5.0 U	5.0	0.31
Isopropylbenzene	270	0.1 U	0.5	0.1	0.2 U	0.2	0.02	0.1 U	0.5	0.1	0.1 U	0.5	0.1	0.1 U	0.5	0.1	0.2 U	0.2	0.06
4-Isopropyltoluene	---	0.1 U	0.5	0.1	0.2 U	0.2	0.03	0.1 U	0.5	0.1	0.1 U	0.5	0.1	0.1 U	0.5	0.1	0.2 U	0.2	0.08
Methyl Iodide	---	0.1 U	0.5	0.1	1.0 U	1.0	0.23	0.1 U	0.5	0.1	0.1 UJ	0.5	0.1	0.1 U	0.5	0.1	1.0 U	1.0	0.04
4-Methyl-2-Pentanone (MIBK)	19,000	1.0 U	5.0	1.0	5.0 U	5.0	0.97	1.0 U	5.0	1.0	1.0 U	5.0	1.0	1.0 U	5.0	1.0	5.0 U	5.0	0.38
Methylene Chloride	230	0.2 U	0.5	0.2	0.5 U	0.5	0.48	0.2 U	0.5	0.2	0.2 U	0.5	0.2	0.2 U	0.5	0.2	0.5 U	0.5	0.39
Naphthalene	26	0.1 U	0.5	0.1	0.5 U	0.5	0.12	0.1 U	0.5	0.1	0.1 U	0.5	0.1	0.1 U	0.5	0.1	0.5 U	0.5	0.07
n-Propylbenzene	530	0.1 U	0.5	0.1	0.2 U	0.2	0.02	0.1 U	0.5	0.1	0.1 U	0.5	0.1	0.1 U	0.5	0.1	0.2 U	0.2	0.08
Styrene	77,000	0.1 U	0.5	0.1	0.2 U	0.2	0.04	0.1 U	0.5	0.1	0.1 U	0.5	0.1	0.1 U	0.5	0.1	0.2 U	0.2	0.07
1,1,1,2-Tetrachloroethane	---	0.1 U	0.5	0.1	0.2 U	0.2	0.04	0.1 U	0.5	0.1	0.1 U	0.5	0.1	0.1 U	0.5	0.1	0.2 U	0.2	0.07
1,1,2,2-Tetrachloroethane	0.33	0.1 U	0.2	0.1	0.2 U	0.2	0.06	0.1 U	0.2	0.1	0.1 U	0.2	0.1	0.1 U	0.2	0.1	0.2 U	0.2	0.07
Tetrachloroethene	3.3	**0.4**	0.2	0.1	0.2 U	0.2	0.05	0.1 U	0.2	0.1	0.1 U	0.2	0.1	0.1 U	0.2	0.1	0.2 U	0.2	0.09
Toluene	1300	0.1 U	0.2	0.1	0.2 U	0.2	0.04	0.1 U	0.2	0.1	0.1 U	0.2	0.1	0.1 U	0.2	0.1	0.2 U	0.2	0.06
1,1,2-Trichloro-1,2,2-trifuoroethane	59,000	0.2 U	0.5	0.2	0.2 U	0.2	0.04	0.2 U	0.5	0.2	0.2 U	0.5	0.2	0.2 U	0.5	0.2	0.2 U	0.2	0.11
1,2,3-Trichlorobenzene	---	0.1 U	0.5	0.1	0.5 U	0.5	0.11	0.1 U	0.5	0.1	0.1 U	0.5	0.1	0.1 U	0.5	0.1	0.5 U	0.5	0.09

TABLE L-1
GROUNDWATER ANALYTICAL RESULTS
BOEING ISAACSON-THOMPSON
REMEDIAL INVESTIGATION

Location:		IT-MW-7			IT-MW-8			IT-MW-8			IT-MW-8			IT-MW-8			IT-MW-9		
Laboratory Sample ID:	Preliminary	6790515/6790516/6790517/VJ63F			UA54C/UA54L/UA55C/UA55K/UB47C/UB47K			6572519/6572520/UL36E			6690477/6690478/6690479/UZ00C			6788024/6788025/6788026/VJ32H			UA27E/UA27M/UA28E/UA28L/UB45E/UB45L		
Laboratory Data Package ID:	Cleanup	1335985/VJ63			UA54/UA55/UB47			1294218/UL36			1316296/UZ00			1335483/VJ32			UA27/UA28/UB45		
Sample Date:	Levels	9/14/2012			12/08/2011			03/08/2012			6/15/2012			9/12/2012			12/06/2011		
		Result	Reporting Limit	Detection Limit	Result	Reporting Limit	Detection Limit	Result	Reporting Limit	Detection Limit	Result	Reporting Limit	Detection Limit	Result	Reporting Limit	Detection Limit	Result	Reporting Limit	Detection Limit
1,2,4-Trichlorobenzene	1.13	0.1 U	0.5	0.1	0.5 U	0.5	0.11	0.1 U	0.5	0.1	0.1 U	0.5	0.1	0.1 U	0.5	0.1	0.5 U	0.5	0.10
1,1,1-Trichloroethane	46,000	0.1 U	0.5	0.1	0.2 U	0.2	0.04	0.1 U	0.5	0.1	0.1 U	0.5	0.1	0.1 U	0.5	0.1	0.2 U	0.2	0.09
1,1,2-Trichloroethane	2.3	0.1 U	0.2	0.1	0.2 U	0.2	0.13	0.1 U	0.2	0.1	0.1 U	0.2	0.1	0.1 U	0.2	0.1	0.2 U	0.2	0.04
Trichloroethene	1.4	**1.3**	0.2	0.1	0.2 U	0.2	0.05	0.1 U	0.2	0.1	0.1 U	0.2	0.1	0.1 U	0.2	0.1	0.2 U	0.2	0.08
Trichlorofluoromethane	6900	0.1 U	0.5	0.1	0.2 U	0.2	0.04	0.1 U	0.5	0.1	0.1 U	0.5	0.1	0.1 U	0.5	0.1	0.2 U	0.2	0.09
1,2,3-Trichloropropane	---	0.3 U	1.0	0.3	0.5 U	0.5	0.13	0.3 U	1.0	0.3	0.3 U	1.0	0.3	0.3 U	1.0	0.3	0.5 U	0.5	0.23
1,2,4-Trimethylbenzene	303	0.1 U	0.5	0.1	0.2 U	0.2	0.02	0.1 U	0.5	0.1	0.1 U	0.5	0.1	0.1 U	0.5	0.1	0.2 U	0.2	0.06
1,3,5-Trimethylbenzene	303	0.1 U	0.5	0.1	0.2 U	0.2	0.02	0.1 U	0.5	0.1	0.1 U	0.5	0.1	0.1 U	0.5	0.1	0.2 U	0.2	0.06
Vinyl Acetate	---	0.2 U	0.5	0.2	1.0 UJ	1.0	0.07	0.2 U	0.5	0.2	0.2 U	0.5	0.2	0.2 U	0.5	0.2	1.0 U	1.0	0.07
Vinyl Chloride	0.53	0.1 U	0.2	0.1	0.2 U	0.2	0.06	0.1 U	0.2	0.1	0.1 U	0.2	0.1	0.1 U	0.2	0.1	0.2 U	0.2	0.08
m,p-Xylene	1300	0.1 U	0.5	0.1	0.4 U	0.4	0.05	0.1 U	0.5	0.1	0.1 U	0.5	0.1	0.1 U	0.5	0.1	0.4 U	0.4	0.14
o-Xylene	1600	0.1 U	0.5	0.1	0.2 U	0.2	0.04	0.1 U	0.5	0.1	0.1 U	0.5	0.1	0.1 U	0.5	0.1	0.2 U	0.2	0.06
2-Chloroethylvinylether	---	NA	NA	NA	1.0 U	1.0	0.25	NA	NA	NA	NA	NA	NA	NA	NA	NA	1.0 U	1.0	0.09
Bromoethane	---	NA	NA	NA	0.2 U	0.2	0.04	NA	NA	NA	NA	NA	NA	NA	NA	NA	0.2 U	0.2	0.09
VOLATILES (µg/L)																			
Method SW8260C-SIM																			
Tetrachloroethene	3.3	**0.41**	0.020	0.010	0.020 U	0.020	0.0036	0.010 U	0.020	0.010	0.019 UJ2	0.020	0.010	0.010 U	0.020	0.010	0.020 U	0.020	0.0036
Vinyl Chloride	0.53	0.010 U	0.020	0.010	0.020 U	0.020	0.0022	0.010 U	0.020	0.010	0.010 U	0.020	0.010	0.010 U	0.020	0.010	0.020 U	0.020	0.0022
Acrylonitrile	0.057	NA	NA	NA	0.050 U	0.050	0.0158	NA	NA	NA	NA	NA	NA	NA	NA	NA	0.050 U	0.050	0.0158
SEMIVOLATILES (µg/L)																			
Method SW8270D																			
Acenaphthene	120	0.1 U	0.5	0.1	**1.2**	1.0	0.55	**0.4** J1	0.5	0.1	**0.2** J1	0.5	0.1	0.1 U	0.5	0.1	1.0 U	1.0	0.55
Acenaphthylene	---	0.1 U	0.5	0.1	1.0 U	1.0	0.48	0.1 U	0.5	0.1	0.1 U	0.5	0.1	0.1 U	0.5	0.1	1.0 U	1.0	0.48
Anthracene	200	0.1 U	0.5	0.1	1.0 U	1.0	0.53	0.1 U	0.5	0.1	0.1 U	0.5	0.1	0.1 U	0.5	0.1	1.0 U	1.0	0.53
Benzo(a)anthracene	0.0018	0.1 U	0.5	0.1	1.0 U	1.0	0.52	0.1 U	0.5	0.1	0.1 U	0.5	0.1	0.1 U	0.5	0.1	1.0 U	1.0	0.52
Benzo(a)pyrene	0.00018	0.1 U	0.5	0.1	1.0 U	1.0	0.48	0.1 U	0.5	0.1	0.1 U	0.5	0.1	0.1 U	0.5	0.1	1.0 U	1.0	0.48
Benzo(b)fluoranthene	0.0018	0.1 U	0.5	0.1	NA	NA	NA	0.1 U	0.5	0.1	0.1 U	0.5	0.1	0.1 U	0.5	0.1	NA	NA	NA
Benzo(g,h,i)perylene	---	0.1 U	0.5	0.1	1.0 U	1.0	0.55	0.1 U	0.5	0.1	0.1 U	0.5	0.1	0.1 U	0.5	0.1	1.0 U	1.0	0.55
Benzo(k)fluoranthene	0.0018	0.1 U	0.5	0.1	NA	NA	NA	0.1 U	0.5	0.1	0.1 U	0.5	0.1	0.1 U	0.5	0.1	NA	NA	NA
Total Benzofluoranthenes	0.0018	NA	NA	NA	1.0 U	1.0	0.48	NA	NA	NA	NA	NA	NA	NA	NA	NA	1.0 U	1.0	0.48
Benzoic Acid	2,240	6 U	15	6	10 U	10	5.1	6 UJ	15	6	6 U	15	6	6 U	15	6	10 UJ	10	5.1
Benzyl Alcohol	182	5 U	15	5	5.0 U	5.0	2.0	5 U	15	5	5 U	15	5	5 U	15	5	5.0 U	5.0	2.0
4-Bromophenyl-phenylether	---	0.5 U	1	0.5	1.0 U	1.0	0.42	0.5 U	1	0.5	0.5 U	1	0.5	0.5 U	1	0.5	1.0 U	1.0	0.42
Butylbenzylphthalate	0.41	2 U	5	2	1.0 U	1.0	0.56	2 U	5	2	2 U	5	2	2 U	5	2	1.0 U	1.0	0.56
Di-n-Butylphthalate	47	2 U	5	2	1.0 U	1.0	0.54	2 U	5	2	2 U	5	2	2 U	5	2	1.0 U	1.0	0.54
Carbazole	---	0.5 U	1	0.5	1.0 U	1.0	0.31	0.5 U	1	0.5	0.5 U	1	0.5	0.5 U	1	0.5	1.0 U	1.0	0.31
4-Chloro-3-methylphenol	3700	0.5 U	1	0.5	5.0 U	5.0	2.4	0.5 U	1	0.5	0.5 U	1	0.5	0.5 U	1	0.5	5.0 U	5.0	2.4
4-Chloroaniline	---	0.5 U	1	0.5	5.0 U	5.0	2.6	0.5 U	1	0.5	0.5 U	1	0.5	0.5 U	1	0.5	5.0 U	5.0	2.6
bis(2-Chloroethoxy) Methane	---	0.5 U	1	0.5	1.0 U	1.0	0.56	0.5 U	1	0.5	0.5 U	1	0.5	0.5 U	1	0.5	1.0 U	1.0	0.56
Bis-(2-Chloroethyl) Ether	---	0.5 U	1	0.5	1.0 U	1.0	0.58	0.5 U	1	0.5	0.5 U	1	0.5	0.5 U	1	0.5	1.0 U	1.0	0.58
2-Chloronaphthalene	---	0.4 U	1	0.4	1.0 U	1.0	0.48	0.4 U	1	0.4	0.4 U	1	0.4	0.4 U	1	0.4	1.0 U	1.0	0.48
2-Chlorophenol	---	0.5 U	1	0.5	1.0 U	1.0	0.53	0.5 U	1	0.5	0.5 U	1	0.5	0.5 U	1	0.5	1.0 U	1.0	0.53
4-Chlorophenyl-phenylether	---	0.5 U	1	0.5	1.0 U	1.0	0.45	0.5 U	1	0.5	0.5 U	1	0.5	0.5 U	1	0.5	1.0 U	1.0	0.45
2,2'-Oxybis(1-Chloropropane)	---	0.5 U	1	0.5	1.0 U	1.0	0.62	0.5 U	1	0.5	0.5 U	1	0.5	0.5 U	1	0.5	1.0 U	1.0	0.62
Chrysene	0.018	0.1 U	0.5	0.1	1.0 U	1.0	0.55	0.1 U	0.5	0.1	0.1 U	0.5	0.1	0.1 U	0.5	0.1	1.0 U	1.0	0.55
Dibenz(a,h)anthracene	0.0018	0.1 U	0.5	0.1	1.0 U	1.0	0.48	0.1 U	0.5	0.1	0.1 U	0.5	0.1	0.1 U	0.5	0.1	1.0 U	1.0	0.48
Dibenzofuran	1.3	0.5 U	1	0.5	1.0 U	1.0	0.48	0.5 U	1	0.5	0.5 U	1	0.5	0.5 U	1	0.5	1.0 U	1.0	0.48
1,2-Dichlorobenzene	440	0.5 U	1	0.5	1.0 U	1.0	0.36	0.5 U	1	0.5	0.5 U	1	0.5	0.5 U	1	0.5	1.0 U	1.0	0.36
1,3-Dichlorobenzene	---	0.5 U	1	0.5	1.0 U	1.0	0.36	0.5 U	1	0.5	0.5 U	1	0.5	0.5 U	1	0.5	1.0 U	1.0	0.36
1,4-Dichlorobenzene	1.7	0.5 U	1	0.5	1.0 U	1.0	0.40	0.5 U	1	0.5	0.5 U	1	0.5	0.5 U	1	0.5	1.0 U	1.0	0.40
3,3'-Dichlorobenzidine	---	2 U	5	2	5.0 U	5.0	1.5	2 U	5	2	2 U	5	2	2 U	5	2	5.0 U	5.0	1.5
2,4-Dichlorophenol	---	0.5 U	1	0.5	5.0 U	5.0	2.6	0.5 U	1	0.5	0.5 U	1	0.5	0.5 U	1	0.5	5.0 U	5.0	2.6
Diethylphthalate	4,236	2 U	5	2	1.0 U	1.0	0.58	2 U	5	2	2 U	5	2	2 U	5	2	1.0 U	1.0	0.58
2,4-Dimethylphenol	660	0.5 U	1	0.5	1.0 U	1.0	0.36	0.5 U	1	0.5	0.5 U	1	0.5	0.5 U	1	0.5	1.0 U	1.0	0.36
Dimethylphthalate	1,100,000	2 U	5	2	1.0 U	1.0	0.53	2 U	5	2	2 U	5	2	2 U	5	2	1.0 U	1.0	0.53
4,6-Dinitro-2-Methylphenol	---	5 U	15	5	10 U	10	3.1	5 U	15	5	5 U	15	5	5 U	15	5	10 U	10	3.1
2,4-Dinitrophenol	---	10 U	29	10	10 U	10	3.5	10 U	30	10	10 U	30	10	10 U	29	10	10 U	10	3.5
2,4-Dinitrotoluene	---	1 U	5	1	5.0 U	5.0	2.5	1 U	5	1	1 U	5	1	1 U	5	1	5.0 U	5.0	2.5
2,6-Dinitrotoluene	---	0.5 U	1	0.5	5.0 U	5.0	2.4	0.5 U	1	0.5	0.5 U	1	0.5	0.5 U	1	0.5	5.0 U	5.0	2.4
bis(2-Ethylhexyl)phthalate	1.2	2 U	5	2	1.0 U	1.0	1.9	2 U	5	2	2 U	5	2	2 U	5	2	1.0 U	1.0	1.9

TABLE L-1
GROUNDWATER ANALYTICAL RESULTS
BOEING ISAACSON-THOMPSON
REMEDIAL INVESTIGATION

Location:		IT-MW-7			IT-MW-8			IT-MW-8			IT-MW-8			IT-MW-8			IT-MW-9		
Laboratory Sample ID:	Preliminary	6790515/6790516/6790517/VJ63F			UA54C/UA54L/UA55C/UA55K/UB47C/UB47K			6572519/6572520/UL36E			6690477/6690478/6690479/UZ00C			6788024/6788025/6788026/VJ32H			UA27E/UA27M/UA28E/UA28L/UB45E/UB45L		
Laboratory Data Package ID:	Cleanup	1335985/VJ63			UA54/UA55/UB47			1294218/UL36			1316296/UZ00			1335483/VJ32			UA27/UA28/UB45		
Sample Date:	Levels	9/14/2012			12/08/2011			03/08/2012			6/15/2012			9/12/2012			12/06/2011		
		Result	Reporting Limit	Detection Limit	Result	Reporting Limit	Detection Limit	Result	Reporting Limit	Detection Limit	Result	Reporting Limit	Detection Limit	Result	Reporting Limit	Detection Limit	Result	Reporting Limit	Detection Limit
Fluoranthene	11	0.1 U	0.5	0.1	1.0 U	1.0	0.52	0.1 U	0.5	0.1	0.1 U	0.5	0.1	0.1 U	0.5	0.1	1.0 U	1.0	0.52
Fluorene	45	0.1 U	0.5	0.1	1.0 U	1.0	0.56	0.1 U	0.5	0.1	0.1 U	0.5	0.1	0.1 U	0.5	0.1	1.0 U	1.0	0.56
Hexachlorobenzene	---	0.1 U	0.5	0.1	1.0 U	1.0	0.47	0.1 U	0.5	0.1	0.1 U	0.5	0.1	0.1 U	0.5	0.1	1.0 U	1.0	0.47
Hexachlorobutadiene	---	0.5 U	1	0.5	1.0 U	1.0	0.31	0.5 U	1	0.5	0.5 U	1	0.5	0.5 U	1	0.5	1.0 U	1.0	0.31
Hexachlorocyclopentadiene	---	5 U	15	5	5.0 U	5.0	1.2	5 U	15	5	5 U	15	5	5 U	15	5	5.0 U	5.0	1.2
Hexachloroethane	---	1 U	5	1	1.0 U	1.0	0.35	1 U	5	1	1 U	5	1	1 U	5	1	1.0 U	1.0	0.35
Indeno(1,2,3-cd)pyrene	0.0018	0.1 U	0.5	0.1	1.0 U	1.0	0.48	0.1 U	0.5	0.1	0.1 U	0.5	0.1	0.1 U	0.5	0.1	1.0 U	1.0	0.48
Isophorone	---	0.5 U	1	0.5	1.0 U	1.0	0.48	0.5 U	1	0.5	0.5 U	1	0.5	0.5 U	1	0.5	1.0 U	1.0	0.48
1-Methylnaphthalene	2.3	0.1 U	0.5	0.1	1.0 U	1.0	0.48	0.1 U	0.5	0.1	0.1 U	0.5	0.1	0.1 U	0.5	0.1	1.0 U	1.0	0.48
2-Methylnaphthalene	64	0.1 U	0.5	0.1	1.0 U	1.0	0.48	0.1 U	0.5	0.1	0.1 U	0.5	0.1	0.1 U	0.5	0.1	1.0 U	1.0	0.48
2-Methylphenol	3100	0.5 U	1	0.5	1.0 U	1.0	0.53	0.5 U	1	0.5	0.5 U	1	0.5	0.5 U	1	0.5	1.0 U	1.0	0.53
4-Methylphenol	330	0.5 U	1	0.5	1.0 U	1.0	0.52	0.5 U	1	0.5	0.5 U	1	0.5	0.5 U	1	0.5	1.0 U	1.0	0.52
Naphthalene	26	0.1 U	0.5	0.1	1.0 U	1.0	0.52	**0.1** J1	0.5	0.1	0.1 U	0.5	0.1	0.1 U	0.5	0.1	1.0 U	1.0	0.52
2-Nitroaniline	---	0.5 U	1	0.5	5.0 U	5.0	2.6	0.5 U	1	0.5	0.5 U	1	0.5	0.5 U	1	0.5	5.0 U	5.0	2.6
3-Nitroaniline	---	0.5 U	1	0.5	5.0 U	5.0	2.3	0.5 U	1	0.5	0.5 U	1	0.5	0.5 U	1	0.5	5.0 U	5.0	2.3
4-Nitroaniline	---	0.5 U	1	0.5	5.0 U	5.0	2.2	0.5 U	1	0.5	0.5 U	1	0.5	0.5 U	1	0.5	5.0 U	5.0	2.2
Nitrobenzene	---	0.5 U	1	0.5	1.0 U	1.0	0.58	0.5 U	1	0.5	0.5 U	1	0.5	0.5 U	1	0.5	1.0 U	1.0	0.58
2-Nitrophenol	---	0.5 U	1	0.5	5.0 U	5.0	2.0	0.5 U	1	0.5	0.5 U	1	0.5	0.5 U	1	0.5	5.0 U	5.0	2.0
4-Nitrophenol	---	10 U	29	10	5.0 U	5.0	2.6	10 U	30	10	10 U	30	10	10 U	29	10	5.0 U	5.0	2.6
N-Nitroso-Di-N-Propylamine	---	0.5 U	1	0.5	1.0 U	1.0	0.56	0.5 U	1	0.5	0.5 U	1	0.5	0.5 U	1	0.5	1.0 U	1.0	0.56
N-Nitrosodiphenylamine	1.96	0.5 U	1	0.5	1.0 U	1.0	0.46	0.5 U	1	0.5	0.5 U	1	0.5	0.5 U	1	0.5	1.0 U	1.0	0.46
Di-n-Octyl phthalate	---	2 U	5	2	1.0 U	1.0	0.51	2 U	5	2	2 U	5	2	2 U	5	2	1.0 U	1.0	0.51
Pentachlorophenol	---	1 U	5	1	5.0 U	5.0	2.4	1 U	5	1	1 U	5	1	1 U	5	1	5.0 U	5.0	2.4
Phenanthrene	---	0.1 U	0.5	0.1	1.0 U	1.0	0.56	0.1 U	0.5	0.1	0.1 U	0.5	0.1	0.1 U	0.5	0.1	1.0 U	1.0	0.56
Phenol	41,000	0.5 U	1	0.5	1.0 U	1.0	0.52	0.5 U	1	0.5	0.5 U	1	0.5	0.5 U	1	0.5	1.0 U	1.0	0.52
Pyrene	9.8	0.1 U	0.5	0.1	1.0 U	1.0	0.55	0.1 U	0.5	0.1	0.1 U	0.5	0.1	0.1 U	0.5	0.1	1.0 U	1.0	0.55
1,2,4-Trichlorobenzene	1.13	0.5 U	1	0.5	1.0 U	1.0	0.38	0.5 U	1	0.5	0.5 U	1	0.5	0.5 U	1	0.5	1.0 U	1.0	0.38
2,4,5-Trichlorophenol	---	0.5 U	1	0.5	5.0 U	5.0	2.2	0.5 U	1	0.5	0.5 U	1	0.5	0.5 U	1	0.5	5.0 U	5.0	2.2
2,4,6-Trichlorophenol	---	0.5 U	1	0.5	5.0 U	5.0	2.4	0.5 U	1	0.5	0.5 U	1	0.5	0.5 U	1	0.5	5.0 U	5.0	2.4
cPAHs (µg/L)																			
Method SW8270D-SIM																			
Benzo(a)anthracene	0.0018	0.0048 U	0.0096	0.0048	0.010 U	0.010	0.0063	0.0050 U	0.010	0.0050	0.0050 U	0.0099	0.0050	0.0049 U	0.0097	0.0049	0.010 U	0.010	0.0063
Benzo(a)pyrene	0.00018	0.0048 U	0.0096	0.0048	0.010 U	0.010	0.0048	0.0050 U	0.010	0.0050	0.0050 U	0.0099	0.0050	0.0049 U	0.0097	0.0049	0.010 U	0.010	0.0048
Benzo(b)fluoranthene	0.0018	0.0048 U	0.0096	0.0048	NA	NA	NA	0.0050 U	0.010	0.0050	0.0050 U	0.0099	0.0050	0.0049 U	0.0097	0.0049	NA	NA	NA
Benzo(k)fluoranthene	0.0018	0.0048 U	0.0096	0.0048	NA	NA	NA	0.0050 U	0.010	0.0050	0.0050 U	0.0099	0.0050	0.0049 U	0.0097	0.0049	NA	NA	NA
Total Benzofluoranthenes	0.0018	NA	NA	NA	0.020 U	0.020	0.0099	NA	NA	NA	NA	NA	NA	NA	NA	NA	0.020 UJ	0.020	0.0099
Chrysene	0.018	0.0048 U	0.0096	0.0048	0.010 U	0.010	0.0046	0.0050 U	0.010	0.0050	0.0050 U	0.0099	0.0050	0.0049 U	0.0097	0.0049	0.010 U	0.010	0.0046
Dibenz(a,h)anthracene	0.0018	0.0038 U	0.0096	0.0038	0.010 U	0.010	0.0048	0.0040 U	0.010	0.0040	0.0040 U	0.0099	0.0040	0.0039 U	0.0097	0.0039	0.010 U	0.010	0.0048
Indeno(1,2,3-cd)pyrene	0.0018	0.0038 U	0.0096	0.0038	0.010 U	0.010	0.0046	0.0040 U	0.010	0.0040	0.0040 U	0.0099	0.0040	0.0039 U	0.0097	0.0039	0.010 U	0.010	0.0046
Pyrene	9.8	0.0096 U	0.048	0.0096	NA	NA	NA	0.010 U	0.050	0.010	0.0099 U	0.050	0.0099	0.0097 U	0.049	0.0097	NA	NA	NA
cPAH TEQ	0.00018	ND	NA	NA	ND	NA	NA	ND	NA	NA	ND	NA	NA	ND	NA	NA	ND	NA	NA
PCBs (µg/L)																			
Method SW8082																			
Aroclor 1016	0.000023	0.0061 U	0.010	0.0061	0.010 U	0.010	0.0025	0.0059 U	0.0099	0.0059	0.0058 U	0.0097	0.0058	0.0057 U	0.0095	0.0057	0.010 U	0.010	0.0025
Aroclor 1221	---	0.0061 U	0.010	0.0061	0.010 U	0.010	0.0028	0.0059 U	0.0099	0.0059	0.0058 U	0.0097	0.0058	0.0057 U	0.0095	0.0057	0.010 U	0.010	0.0028
Aroclor 1232	---	0.0071 U	0.010	0.0071	0.010 U	0.010	0.0028	0.0069 U	0.0099	0.0069	0.0068 U	0.0097	0.0068	0.0067 U	0.0095	0.0067	0.010 U	0.010	0.0028
Aroclor 1242	0.000023	0.0061 U	0.010	0.0061	0.010 U	0.010	0.0028	0.0059 U	0.0099	0.0059	0.0058 U	0.0097	0.0058	0.0057 U	0.0095	0.0057	0.010 U	0.010	0.0028
Aroclor 1248	0.000023	0.0051 U	0.010	0.0051	0.010 U	0.010	0.0028	0.0049 U	0.0099	0.0049	0.0049 U	0.0097	0.0049	0.0048 U	0.0095	0.0048	0.010 U	0.010	0.0028
Aroclor 1254	0.0000055	0.0051 U	0.010	0.0051	0.010 U	0.010	0.0028	0.0049 U	0.0099	0.0049	0.0049 U	0.0097	0.0049	0.0048 U	0.0095	0.0048	0.010 U	0.010	0.0028
Aroclor 1260	0.000023	0.0051 U	0.010	0.0051	0.010 U	0.010	0.0028	0.0049 U	0.0099	0.0049	0.0049 U	0.0097	0.0049	0.0048 U	0.0095	0.0048	0.010 U	0.010	0.0028
Total PCBs	0.000023	ND	NA	NA	ND	NA	NA	ND	NA	NA	ND	NA	NA	ND	NA	NA	ND	NA	NA

TABLE L-1
GROUNDWATER ANALYTICAL RESULTS
BOEING ISAACSON-THOMPSON
REMEDIAL INVESTIGATION

Location:		IT-MW-7			IT-MW-8			IT-MW-8			IT-MW-8			IT-MW-8			IT-MW-9		
Laboratory Sample ID:	Preliminary	6790515/6790516/6790517/VJ63F			UA54C/UA54L/UA55C/UA55K/UB47C/UB47K			6572519/6572520/UL36E			6690477/6690478/6690479/UZ00C			6788024/6788025/6788026/VJ32H			UA27E/UA27M/UA28E/UA28L/UB45E/UB45L		
Laboratory Data Package ID:	Cleanup	1335985/VJ63			UA54/UA55/UB47			1294218/UL36			1316296/UZ00			1335483/VJ32			UA27/UA28/UB45		
Sample Date:	Levels	9/14/2012			12/08/2011			03/08/2012			6/15/2012			9/12/2012			12/06/2011		
		Result	Reporting Limit	Detection Limit	Result	Reporting Limit	Detection Limit	Result	Reporting Limit	Detection Limit	Result	Reporting Limit	Detection Limit	Result	Reporting Limit	Detection Limit	Result	Reporting Limit	Detection Limit
TOTAL PETROLEUM HYDROCARBONS (mg/L)																			
NWTPH-Dx																			
Diesel-Range Organics	0.5	0.030 U	0.100	0.030	0.10 U	0.10	0.022	0.070 U	0.25	0.070	0.029 U	0.097	0.029	0.029 U	0.097	0.029	0.10 U	0.10	0.022
Oil-Range Organics	0.5	0.071 U	0.250	0.071	0.20 U	0.20	0.044	1.0 U	3.0	1.0	0.068 U	0.240	0.068	0.068 U	0.240	0.068	0.20 U	0.20	0.044
NWTPH-G																			
Gasoline-Range Organics	1.0/0.8	0.05 U	0.25	0.05	0.25 U	0.25	0.06	0.05 U	0.25	0.05	0.05 U	0.25	0.05	0.05 U	0.25	0.05	0.25 U	0.25	0.06
TOTAL METALS (µg/L)																			
Method 200.8																			
Antimony	---	0.33 U	1.0	0.33	0.2 U	0.2	0.010	0.42 U	1.0	0.42	0.42 U	1.0	0.42	0.33 U	1.0	0.33	**0.2**	0.2	0.010
Arsenic	---	**4.7**	2.0	0.40	**88.5**	0.5	0.120	**1.6** J1	2.0	0.95	**1.9** J1	2.0	0.95	**3.0**	2.0	0.40	**7.6**	0.5	0.048
Barium	---	**10.6**	2.0	0.41	**37.4**	0.5	0.020	**44.1**	2.0	0.69	**30.0**	2.0	0.69	**32.7**	2.0	0.41	**37.0**	0.5	0.020
Beryllium	---	**0.027** J1	0.50	0.025	0.2 U	0.2	0.021	0.13 U	0.50	0.13	0.13 U	0.50	0.13	0.025 U	0.50	0.025	0.2 U	0.2	0.021
Cadmium	---	0.082 U	0.50	0.082	0.1 U	0.1	0.010	0.20 U	0.50	0.20	0.20 U	0.50	0.20	0.082 U	0.50	0.082	0.1 U	0.1	0.010
Chromium	---	0.50 U	2.0	0.50	0.5 U	0.5	0.045	0.60 U	2.0	0.60	0.60 U	2.0	0.60	0.50 U	2.0	0.50	0.5 U	0.5	0.045
Copper	---	**2.2**	2.0	0.40	**0.7**	0.5	0.158	**0.57** J1	2.0	0.38	**0.56** J1	2.0	0.38	**0.50** J1	2.0	0.40	**1.2**	0.5	0.158
Lead	---	0.034 U	1.0	0.034	0.1 U	0.1	0.046	0.080 U	1.0	0.080	0.080 U	1.0	0.080	0.034 U	1.0	0.034	0.1 U	0.1	0.046
Nickel	---	**1.7** J1	2.0	0.35	**4.4**	0.5	0.079	**1.2** J1	2.0	0.50	**1.2** J1	2.0	0.50	**0.82** J1	2.0	0.35	**1.8**	0.5	0.079
Selenium	---	**0.63** J1	2.0	0.50	**0.7**	0.5	0.127	0.27 U	2.0	0.27	0.27 U	2.0	0.27	0.50 U	2.0	0.50	**4**	2	0.13
Silver	---	0.10 U	0.50	0.10	0.2 U	0.2	0.008	0.098 U	0.50	0.098	0.098 U	0.50	0.098	0.10 U	0.50	0.10	0.2 U	0.2	0.008
Thallium	---	0.15 U	0.50	0.15	0.2 U	0.2	0.004	0.15 U	0.50	0.15	0.15 U	0.50	0.15	0.15 U	0.50	0.15	0.2 U	0.2	0.004
Zinc	---	**1.5** J1	15.0	1.1	4 U	4	0.50	4.0 U	15.0	4.0	4.0 U	15.0	4.0	1.4 UJ2	15.0	1.1	**6**	4	0.50
Method SW7196A (mg/L)																			
Chromium VI	0.00058	0.010 U	0.010	0.00300	0.010 U	0.010	0.00300	0.010 U	0.010	0.00300	0.010 UJ	0.010	0.00300	0.010 UJ	0.010	0.00300	0.010 U	0.010	0.00300
Method SW7470A/EPA 1631E (ng/L)																			
Mercury	12	**2.06**	0.500	0.160	20.0 U	20.0	2.60	**1.60** J1	5.00	1.60	1.60 U	5.00	1.60	1.60 U	5.00	1.60	20.0 U	20.0	2.60
DISSOLVED METALS (µg/L)																			
Methods 200.8/SW7196A																			
Antimony	150	0.33 U	1.0	0.33	0.2 U	0.2	0.010	0.42 U	1.0	0.42	**0.10** J1	1.0	0.10	0.33 U	1.0	0.33	**0.2**	0.2	0.010
Arsenic	8	**3.2**	2.0	0.40	**2.8**	0.2	0.048	**1.5** J1	2.0	0.95	**1.5** J1	2.0	0.20	**2.1**	2.0	0.40	**6.6**	0.5	0.048
Barium	770	**10.8**	2.0	0.41	**36.9**	0.5	0.020	**44.8**	2.0	0.69	**31.7**	2.0	0.41	**32.8**	2.0	0.41	**35.0**	0.5	0.020
Beryllium	12	0.025 U	0.50	0.025	0.2 U	0.2	0.021	0.13 U	0.50	0.13	0.025 U	0.50	0.025	0.025 U	0.50	0.025	0.2 U	0.2	0.021
Cadmium	0.25	0.082 U	0.50	0.082	0.1 U	0.1	0.010	0.20 U	0.50	0.20	0.048 U	0.50	0.048	0.082 U	0.50	0.082	0.1 U	0.1	0.010
Chromium	74	0.50 U	2.0	0.50	1 U	1	0.11	0.60 U	2.0	0.60	**0.70** J1	2.0	0.10	0.50 U	2.0	0.50	**0.6**	0.5	0.045
Copper	8	**2.3**	2.0	0.40	**1.3**	0.5	0.158	**0.54** J1	2.0	0.38	**0.56** J1	2.0	0.15	0.44 UJ2	2.0	0.40	**1.5**	0.5	0.158
Lead	2.5	0.034 U	1.0	0.034	0.1 U	0.1	0.046	0.080 U	1.0	0.080	0.034 U	1.0	0.034	0.034 U	1.0	0.034	0.1 U	0.1	0.046
Nickel	8.2	**1.7** J1	2.0	0.35	**4.2**	0.5	0.079	**1.5** J1	2.0	0.50	**1.5** J1	2.0	0.13	**1.0** J1	2.0	0.35	**1.8**	0.5	0.079
Selenium	5	**1.0** J1	2.0	0.50	0.5 U	0.5	0.127	0.27 U	2.0	0.27	**0.19** J1	2.0	0.18	0.50 U	2.0	0.50	**3**	2	0.13
Silver	22	0.10 U	0.50	0.10	0.2 U	0.2	0.008	0.098 U	0.50	0.098	0.046 U	0.50	0.046	0.10 U	0.50	0.10	0.2 U	0.2	0.008
Thallium	0.47	0.15 U	0.50	0.15	0.2 U	0.2	0.004	0.15 U	0.50	0.15	0.029 U	0.50	0.029	0.15 U	0.50	0.15	0.2 U	0.2	0.004
Zinc	56	**2.5** J1	15.0	1.1	4 U	4	0.50	4.0 U	15.0	4.0	**1.2** J1	15.0	1.1	**2.6** J1	15.0	1.1	**7**	4	0.50
Method SW7470A/EPA 1631E (ng/L)																			
Mercury	12	**2.81**	0.500	0.160	20.0 U	20.0	2.60	1.60 U	5.00	1.60	**1.61** J1	5.00	1.60	1.60 U	5.00	1.60	20.0 U	20.0	2.60
CONVENTIONALS (mg/L)																			
Chloride (Method 300.0)	---	**13.4**	2.0	1.0	NA	NA	NA	NA	NA	NA	**17.6**	4.0	2.0	**16.3**	4.0	2.0	NA	NA	NA
Nitrate (Method 300.0)	---	**1.5**	0.10	0.050	0.1 U	0.1	0.007	**0.12**	0.10	0.050	**0.11**	0.10	0.050	0.050 U	0.10	0.050	**0.1**	0.1	0.007
Sulfate (Method 300.0)	---	**35.7**	5.0	1.5	**153**	5.0	2.95	**176**	50.0	15.0	**95.1** J	10.0	3.0	**88.1**	10.0	3.0	**155**	5.0	2.95
Total Dissolved Solids (Method 160.1)	---	**207**	30.0	9.7	**891**	13.3	13.3	**948**	120	38.8	**784**	120	38.8	**687**	60.0	19.4	**1820**	20.0	20.0
FIELD PARAMETERS																			
Temperature (°C)	---	15.56	NA	NA	14.76	NA	NA	14.46	NA	NA	14.89	NA	NA	16.04	NA	NA	14.29	NA	NA
Conductivity (uS/cm)	---	192	NA	NA	3082	NA	NA	1862	NA	NA	948	NA	NA	864	NA	NA	3764	NA	NA
Dissolved Oxygen (mg/L)	---	1.13	NA	NA	1.13	NA	NA	0.54	NA	NA	0.26	NA	NA	0.53	NA	NA	1.82	NA	NA
pH (SU)	---	6.61	NA	NA	6.71	NA	NA	8.11	NA	NA	7.11	NA	NA	7.72	NA	NA	8.40	NA	NA
ORP (mV)	---	76.2	NA	NA	-23.9	NA	NA	21.5	NA	NA	1.6	NA	NA	9.1	NA	NA	35.0	NA	NA
Turbidity (NTU)	---	7.64	NA	NA	2.52	NA	NA	2.94	NA	NA	0.61	NA	NA	16.7	NA	NA	16.58	NA	NA
Ferrous Iron (mg/L)	---	2.2	NA	NA	NA	NA	NA	0.8	NA	NA	0.6	NA	NA	2.2	NA	NA	NA	NA	NA

TABLE L-1
GROUNDWATER ANALYTICAL RESULTS
BOEING ISAACSON-THOMPSON
REMEDIAL INVESTIGATION

Location:		IT-MW-9			IT-MW-9			IT-MW-9			IT-MW-10			IT-MW-10			IT-MW-10		
Laboratory Sample ID:	Preliminary	6577007/6577008/UM00D			6690471/6690472/6690473/UZ00A			6789056/6789057/6789058/VJ53D			UA27G/UA27O/UA28G/UA28N/UB45G/UB45N			65825256582526/UM84D			6689140/6689141/6689142/UY55D		
Laboratory Data Package ID:	Cleanup	1295065/UM00			1316296/UZ00			1335688/VJ53			UA27/UA28/UB45			1296009/UM84			1316071/UY55		
Sample Date:	Levels	03/12/2012			6/15/2012			9/13/2012			12/06/2011			3/15/2012			6/14/2012		
		Result	Reporting Limit	Detection Limit	Result	Reporting Limit	Detection Limit	Result	Reporting Limit	Detection Limit	Result	Reporting Limit	Detection Limit	Result	Reporting Limit	Detection Limit	Result	Reporting Limit	Detection Limit
VOLATILES (µg/L)																			
Method SW8260C																			
Acetone	110,000	3.0 U	5.0	3.0	3.0 U	5.0	3.0	3.0 U	5.0	3.0	2.8 UJ2	5.0	0.72	3.0 U	5.0	3.0	3.0 U	5.0	3.0
Acrolein	---	5.0 U	25	5.0	5.0 U	25	5.0	5.0 U	25	5.0	5.0 UJ	5.0	0.29	5.0 U	25	5.0	5.0 U	25	5.0
Acrylonitrile	0.057	1.0 U	5.0	1.0	1.0 U	5.0	1.0	1.0 U	5.0	1.0	1.0 U	1.0	0.18	1.0 U	5.0	1.0	1.0 U	5.0	1.0
Benzene	2	0.1 U	0.2	0.1	0.1 U	0.2	0.1	0.1 U	0.2	0.1	0.2 U	0.2	0.06	0.1 U	0.2	0.1	0.1 U	0.2	0.1
Bromobenzene	---	0.1 U	0.5	0.1	0.1 U	0.5	0.1	0.1 U	0.5	0.1	0.2 U	0.2	0.05	0.1 U	0.5	0.1	0.1 U	0.5	0.1
Bromochloromethane	---	0.1 U	0.5	0.1	0.1 U	0.5	0.1	0.1 U	0.5	0.1	0.2 U	0.2	0.07	0.1 U	0.5	0.1	0.1 U	0.5	0.1
Bromodichloromethane	17	0.1 U	0.5	0.1	0.1 U	0.5	0.1	0.1 U	0.5	0.1	0.2 U	0.2	0.05	**0.2** J1	0.5	0.1	0.1 U	0.5	0.1
Bromoform	---	0.1 U	0.5	0.1	0.1 U	0.5	0.1	0.1 U	0.5	0.1	0.2 U	0.2	0.07	0.1 U	0.5	0.1	0.1 U	0.5	0.1
Bromomethane	---	0.1 U	0.5	0.1	0.1 U	0.5	0.1	0.1 U	0.5	0.1	1.0 U	1.0	0.04	0.1 U	0.5	0.1	0.1 U	0.5	0.1
2-Butanone	73,000	1.0 U	5.0	1.0	1.0 U	5.0	1.0	1.0 U	5.0	1.0	5.0 U	5.0	0.81	1.0 U	5.0	1.0	1.0 U	5.0	1.0
n-Butylbenzene	780	0.1 U	0.5	0.1	0.1 U	0.5	0.1	0.1 U	0.5	0.1	0.2 U	0.2	0.11	0.1 U	0.5	0.1	0.1 U	0.5	0.1
sec-Butylbenzene	---	0.1 U	0.5	0.1	0.1 U	0.5	0.1	0.1 U	0.5	0.1	0.2 U	0.2	0.08	0.1 U	0.5	0.1	0.1 U	0.5	0.1
tert-Butylbenzene	---	0.1 U	0.5	0.1	0.1 U	0.5	0.1	0.1 U	0.5	0.1	0.2 U	0.2	0.06	0.1 U	0.5	0.1	0.1 U	0.5	0.1
Carbon Disulfide	3900	0.4 U	0.5	0.4	0.4 U	0.5	0.4	0.4 U	0.5	0.4	0.2 U	0.2	0.09	0.4 U	0.5	0.4	0.4 U	0.5	0.4
Carbon Tetrachloride	0.46	0.1 U	0.2	0.1	0.1 U	0.2	0.1	0.1 U	0.2	0.1	0.2 U	0.2	0.08	0.1 U	0.2	0.1	0.1 U	0.2	0.1
Chlorobenzene	270	0.1 U	0.5	0.1	0.1 U	0.5	0.1	0.1 U	0.5	0.1	0.2 U	0.2	0.04	0.1 U	0.5	0.1	0.1 U	0.5	0.1
Chloroethane	21,000	0.1 U	0.5	0.1	0.1 U	0.5	0.1	0.1 U	0.5	0.1	0.2 U	0.2	0.15	0.1 U	0.5	0.1	0.1 U	0.5	0.1
Chloroform	9.4	0.1 U	0.2	0.1	0.1 U	0.2	0.1	0.1 U	0.2	0.1	**1.9**	0.2	0.08	**4.5**	0.2	0.1	0.1 U	0.2	0.1
Chloromethane	10.3	0.2 U	0.5	0.2	0.2 U	0.5	0.2	0.2 U	0.5	0.2	0.5 U	0.5	0.10	0.2 U	0.5	0.2	0.2 U	0.5	0.2
2-Chlorotoluene	---	0.1 U	0.5	0.1	0.1 U	0.5	0.1	0.1 U	0.5	0.1	0.2 U	0.2	0.04	0.1 U	0.5	0.1	0.1 U	0.5	0.1
4-Chlorotoluene	2600	0.1 U	0.5	0.1	0.1 U	0.5	0.1	0.1 U	0.5	0.1	0.2 U	0.2	0.07	0.1 U	0.5	0.1	0.1 U	0.5	0.1
1,2-Dibromo-3-chloropropane	---	0.2 U	0.5	0.2	0.2 U	0.5	0.2	0.2 U	0.5	0.2	0.5 UJ	0.5	0.21	0.2 U	0.5	0.2	0.2 U	0.5	0.2
Dibromochloromethane	---	0.1 U	0.5	0.1	0.1 U	0.5	0.1	0.1 U	0.5	0.1	0.2 U	0.2	0.09	0.1 U	0.5	0.1	0.1 U	0.5	0.1
Dibromomethane	---	0.1 U	0.5	0.1	0.1 U	0.5	0.1	0.1 U	0.5	0.1	0.2 U	0.2	0.08	0.1 U	0.5	0.1	0.1 U	0.5	0.1
trans-1,4-Dichloro-2-butene	---	1.0 U	5.0	1.0	1.0 U	5.0	1.0	1.0 U	5.0	1.0	1.0 UJ	1.0	0.24	1.0 U	5.0	1.0	1.0 U	5.0	1.0
1,2-Dichlorobenzene	440	0.1 U	0.5	0.1	0.1 U	0.5	0.1	0.1 U	0.5	0.1	0.2 U	0.2	0.06	0.1 U	0.5	0.1	0.1 U	0.5	0.1
1,3-Dichlorobenzene	960	0.1 U	0.5	0.1	0.1 U	0.5	0.1	0.1 U	0.5	0.1	0.2 U	0.2	0.04	0.1 U	0.5	0.1	0.1 U	0.5	0.1
1,4-Dichlorobenzene	1.7	0.1 U	0.5	0.1	0.1 U	0.5	0.1	0.1 U	0.5	0.1	0.2 U	0.2	0.06	0.1 U	0.5	0.1	0.1 U	0.5	0.1
1,1-Dichloroethane	33	0.1 U	0.5	0.1	0.1 U	0.5	0.1	0.1 U	0.5	0.1	0.2 U	0.2	0.05	0.1 U	0.5	0.1	0.1 U	0.5	0.1
1,2-Dichloroethane	3.6	0.1 U	0.2	0.1	0.1 U	0.2	0.1	0.1 U	0.2	0.1	0.2 U	0.2	0.08	0.1 U	0.2	0.1	0.1 U	0.2	0.1
1,1-Dichloroethene	3.2	0.1 U	0.2	0.1	0.1 U	0.2	0.1	0.1 U	0.2	0.1	0.2 U	0.2	0.09	0.1 U	0.2	0.1	0.1 U	0.2	0.1
cis-1,2-Dichloroethene	130	0.1 U	0.2	0.1	0.1 U	0.2	0.1	0.1 U	0.2	0.1	0.2 U	0.2	0.10	0.1 U	0.2	0.1	0.1 U	0.2	0.1
trans-1,2-Dichloroethene	940	0.1 U	0.2	0.1	0.1 U	0.2	0.1	0.1 U	0.2	0.1	0.2 U	0.2	0.08	0.1 U	0.2	0.1	0.1 U	0.2	0.1
1,2-Dichloropropane	3.7	0.1 U	0.5	0.1	0.1 U	0.5	0.1	0.1 U	0.5	0.1	0.2 U	0.2	0.09	0.1 U	0.5	0.1	0.1 U	0.5	0.1
1,3-Dichloropropane	---	0.1 U	0.5	0.1	0.1 U	0.5	0.1	0.1 U	0.5	0.1	0.2 U	0.2	0.02	0.1 U	0.5	0.1	0.1 U	0.5	0.1
2,2-Dichloropropane	---	0.1 U	0.5	0.1	0.1 U	0.5	0.1	0.1 U	0.5	0.1	0.2 U	0.2	0.08	0.1 U	0.5	0.1	0.1 U	0.5	0.1
1,1-Dichloropropene	---	0.1 U	0.5	0.1	0.1 U	0.5	0.1	0.1 U	0.5	0.1	0.2 U	0.2	0.09	0.1 U	0.5	0.1	0.1 U	0.5	0.1
cis-1,3-Dichloropropene	---	0.1 U	0.2	0.1	0.1 U	0.2	0.1	0.1 U	0.2	0.1	0.2 U	0.2	0.06	0.1 U	0.2	0.1	0.1 U	0.2	0.1
trans-1,3-Dichloropropene	---	0.1 U	0.2	0.1	0.1 U	0.2	0.1	0.1 U	0.2	0.1	0.2 U	0.2	0.06	0.1 U	0.2	0.1	0.1 U	0.2	0.1
Ethylbenzene	1.7	0.1 U	0.5	0.1	0.1 U	0.5	0.1	0.1 U	0.5	0.1	0.2 U	0.2	0.09	0.1 U	0.5	0.1	0.1 U	0.5	0.1
Ethylene Dibromide	---	0.1 U	0.5	0.1	0.1 U	0.5	0.1	0.1 U	0.5	0.1	0.2 U	0.2	0.08	0.1 U	0.5	0.1	0.1 U	0.5	0.1
Hexachlorobutadiene	---	0.1 U	0.5	0.1	0.1 U	0.5	0.1	0.1 U	0.5	0.1	0.5 U	0.5	0.11	0.1 U	0.5	0.1	0.1 U	0.5	0.1
2-Hexanone	3200	1.0 U	5.0	1.0	1.0 U	5.0	1.0	1.0 U	5.0	1.0	5.0 U	5.0	0.31	1.0 U	5.0	1.0	1.0 U	5.0	1.0
Isopropylbenzene	270	0.1 U	0.5	0.1	0.1 U	0.5	0.1	0.1 U	0.5	0.1	0.2 U	0.2	0.06	0.1 U	0.5	0.1	0.1 U	0.5	0.1
4-Isopropyltoluene	---	0.1 U	0.5	0.1	0.1 U	0.5	0.1	0.1 U	0.5	0.1	0.2 U	0.2	0.08	0.1 U	0.5	0.1	0.1 U	0.5	0.1
Methyl Iodide	---	0.1 U	0.5	0.1	0.1 UJ	0.5	0.1	0.1 U	0.5	0.1	1.0 U	1.0	0.04	0.1 U	0.5	0.1	0.1 UJ	0.5	0.1
4-Methyl-2-Pentanone (MIBK)	19,000	1.0 U	5.0	1.0	1.0 U	5.0	1.0	1.0 U	5.0	1.0	5.0 U	5.0	0.38	1.0 U	5.0	1.0	1.0 U	5.0	1.0
Methylene Chloride	230	0.2 U	0.5	0.2	0.2 U	0.5	0.2	0.2 U	0.5	0.2	0.5 U	0.5	0.39	0.2 U	0.5	0.2	0.2 U	0.5	0.2
Naphthalene	26	0.1 U	0.5	0.1	0.1 U	0.5	0.1	0.1 U	0.5	0.1	0.5 U	0.5	0.07	0.1 U	0.5	0.1	0.1 U	0.5	0.1
n-Propylbenzene	530	0.1 U	0.5	0.1	0.1 U	0.5	0.1	0.1 U	0.5	0.1	0.2 U	0.2	0.08	0.1 U	0.5	0.1	0.1 U	0.5	0.1
Styrene	77,000	0.1 U	0.5	0.1	0.1 U	0.5	0.1	0.1 U	0.5	0.1	0.2 U	0.2	0.07	0.1 U	0.5	0.1	0.1 U	0.5	0.1
1,1,1,2-Tetrachloroethane	---	0.1 U	0.5	0.1	0.1 U	0.5	0.1	0.1 U	0.5	0.1	0.2 U	0.2	0.07	0.1 U	0.5	0.1	0.1 U	0.5	0.1
1,1,2,2-Tetrachloroethane	0.33	0.1 U	0.2	0.1	0.1 U	0.2	0.1	0.1 U	0.2	0.1	0.2 U	0.2	0.07	0.1 U	0.2	0.1	0.1 U	0.2	0.1
Tetrachloroethene	3.3	0.1 U	0.2	0.1	0.1 U	0.2	0.1	0.1 U	0.2	0.1	0.2 U	0.2	0.09	0.1 U	0.2	0.1	0.1 U	0.2	0.1
Toluene	1300	0.1 U	0.2	0.1	0.1 U	0.2	0.1	0.1 U	0.2	0.1	0.2 U	0.2	0.06	0.1 U	0.2	0.1	**0.2**	0.2	0.1
1,1,2-Trichloro-1,2,2-trifuoroethane	59,000	0.2 U	0.5	0.2	0.2 U	0.5	0.2	0.2 U	0.5	0.2	0.2 U	0.2	0.11	0.2 U	0.5	0.2	0.2 U	0.5	0.2
1,2,3-Trichlorobenzene	---	0.1 U	0.5	0.1	0.1 U	0.5	0.1	0.1 U	0.5	0.1	0.5 U	0.5	0.09	0.1 U	0.5	0.1	0.1 U	0.5	0.1

TABLE L-1
GROUNDWATER ANALYTICAL RESULTS
BOEING ISAACSON-THOMPSON
REMEDIAL INVESTIGATION

Location:		IT-MW-9			IT-MW-9			IT-MW-9			IT-MW-10			IT-MW-10			IT-MW-10		
Laboratory Sample ID:	Preliminary	6577007/6577008/UM00D			6690471/6690472/6690473/UZ00A			6789056/6789057/6789058/VJ53D			UA27G/UA27O/UA28G/UA28N/UB45G/UB45N			65825256582526/UM84D			6689140/6689141/6689142/UY55D		
Laboratory Data Package ID:	Cleanup	1295065/UM00			1316296/UZ00			1335688/VJ53			UA27/UA28/UB45			1296009/UM84			1316071/UY55		
Sample Date:	Levels	03/12/2012			6/15/2012			9/13/2012			12/06/2011			3/15/2012			6/14/2012		
		Result	Reporting Limit	Detection Limit	Result	Reporting Limit	Detection Limit	Result	Reporting Limit	Detection Limit	Result	Reporting Limit	Detection Limit	Result	Reporting Limit	Detection Limit	Result	Reporting Limit	Detection Limit
1,2,4-Trichlorobenzene	1.13	0.1 U	0.5	0.1	0.1 U	0.5	0.1	0.1 U	0.5	0.1	0.5 U	0.5	0.10	0.1 U	0.5	0.1	0.1 U	0.5	0.1
1,1,1-Trichloroethane	46,000	0.1 U	0.5	0.1	0.1 U	0.5	0.1	0.1 U	0.5	0.1	0.2 U	0.2	0.09	0.1 U	0.5	0.1	0.1 U	0.5	0.1
1,1,2-Trichloroethane	2.3	0.1 U	0.2	0.1	0.1 U	0.2	0.1	0.1 U	0.2	0.1	0.2 U	0.2	0.04	0.1 U	0.2	0.1	0.1 U	0.2	0.1
Trichloroethene	1.4	0.1 U	0.2	0.1	0.1 U	0.2	0.1	0.1 U	0.2	0.1	0.2 U	0.2	0.08	0.1 U	0.2	0.1	0.1 U	0.2	0.1
Trichlorofluoromethane	6900	0.1 U	0.5	0.1	0.1 U	0.5	0.1	0.1 U	0.5	0.1	0.2 U	0.2	0.09	0.1 U	0.5	0.1	0.1 U	0.5	0.1
1,2,3-Trichloropropane	---	0.3 U	1.0	0.3	0.3 U	1.0	0.3	0.3 U	1.0	0.3	0.5 U	0.5	0.23	0.3 U	1.0	0.3	0.3 U	1.0	0.3
1,2,4-Trimethylbenzene	303	0.1 U	0.5	0.1	0.1 U	0.5	0.1	0.1 U	0.5	0.1	0.2 U	0.2	0.06	0.1 U	0.5	0.1	0.1 U	0.5	0.1
1,3,5-Trimethylbenzene	303	0.1 U	0.5	0.1	0.1 U	0.5	0.1	0.1 U	0.5	0.1	0.2 U	0.2	0.06	0.1 U	0.5	0.1	0.1 U	0.5	0.1
Vinyl Acetate	---	0.2 U	0.5	0.2	0.2 U	0.5	0.2	0.2 U	0.5	0.2	1.0 U	1.0	0.07	0.2 U	0.5	0.2	0.2 U	0.5	0.2
Vinyl Chloride	0.53	0.1 U	0.2	0.1	0.1 U	0.2	0.1	0.1 U	0.2	0.1	0.2 U	0.2	0.08	0.1 U	0.2	0.1	0.1 U	0.2	0.1
m,p-Xylene	1300	0.1 U	0.5	0.1	0.1 U	0.5	0.1	0.1 U	0.5	0.1	0.4 U	0.4	0.14	0.1 U	0.5	0.1	0.1 U	0.5	0.1
o-Xylene	1600	0.1 U	0.5	0.1	0.1 U	0.5	0.1	0.1 U	0.5	0.1	0.2 U	0.2	0.06	0.1 U	0.5	0.1	0.1 U	0.5	0.1
2-Chloroethylvinylether	---	NA	NA	NA	NA	NA	NA	NA	NA	NA	1.0 U	1.0	0.09	NA	NA	NA	NA	NA	NA
Bromoethane	---	NA	NA	NA	NA	NA	NA	NA	NA	NA	0.2 U	0.2	0.09	NA	NA	NA	NA	NA	NA
VOLATILES (µg/L)																			
Method SW8260C-SIM																			
Tetrachloroethene	3.3	**0.012** J1	0.020	0.010	0.021 U	0.020	0.010	**0.018** J1	0.020	0.010	0.020 U	0.020	0.0036	0.010 U	0.020	0.010	**0.014** J1	0.020	0.010
Vinyl Chloride	0.53	0.010 U	0.020	0.010	0.010 U	0.020	0.010	0.010 U	0.020	0.010	0.020 U	0.020	0.0022	0.010 U	0.020	0.010	0.010 U	0.020	0.010
Acrylonitrile	0.057	NA	NA	NA	NA	NA	NA	NA	NA	NA	0.050 U	0.050	0.0158	NA	NA	NA	NA	NA	NA
SEMIVOLATILES (µg/L)																			
Method SW8270D																			
Acenaphthene	120	0.1 U	0.5	0.1	0.1 U	0.5	0.1	0.1 U	0.5	0.1	1.0 U	1.0	0.55	0.1 U	0.5	0.1	**0.1** J1	0.5	0.1
Acenaphthylene	---	0.1 U	0.5	0.1	0.1 U	0.5	0.1	0.1 U	0.5	0.1	1.0 U	1.0	0.48	0.1 U	0.5	0.1	0.1 U	0.5	0.1
Anthracene	200	0.1 U	0.5	0.1	0.1 U	0.5	0.1	0.1 U	0.5	0.1	1.0 U	1.0	0.53	0.1 U	0.5	0.1	0.1 U	0.5	0.1
Benzo(a)anthracene	0.0018	0.1 U	0.5	0.1	0.1 U	0.5	0.1	0.1 U	0.5	0.1	1.0 U	1.0	0.52	0.1 U	0.5	0.1	0.1 U	0.5	0.1
Benzo(a)pyrene	0.00018	0.1 U	0.5	0.1	0.1 U	0.5	0.1	0.1 U	0.5	0.1	1.0 U	1.0	0.48	0.1 U	0.5	0.1	0.1 U	0.5	0.1
Benzo(b)fluoranthene	0.0018	0.1 U	0.5	0.1	0.1 U	0.5	0.1	0.1 U	0.5	0.1	NA	NA	NA	0.1 U	0.5	0.1	0.1 U	0.5	0.1
Benzo(g,h,i)perylene	---	0.1 U	0.5	0.1	0.1 U	0.5	0.1	0.1 U	0.5	0.1	1.0 U	1.0	0.55	0.1 U	0.5	0.1	0.1 U	0.5	0.1
Benzo(k)fluoranthene	0.0018	0.1 U	0.5	0.1	0.1 U	0.5	0.1	0.1 U	0.5	0.1	NA	NA	NA	0.1 U	0.5	0.1	0.1 U	0.5	0.1
Total Benzofluoranthenes	0.0018	NA	NA	NA	NA	NA	NA	NA	NA	NA	1.0 U	1.0	0.48	NA	NA	NA	NA	NA	NA
Benzoic Acid	2,240	6 UJ	14	6	6 U	14	6	6 UJ	15	6	10 UJ	10	5.1	6 U	14	6	6 U	15	6
Benzyl Alcohol	182	5 U	14	5	5 U	14	5	5 U	15	5	5.0 U	5.0	2.0	5 U	14	5	5 U	15	5
4-Bromophenyl-phenylether	---	0.5 U	1	0.5	0.5 U	1	0.5	0.5 U	1	0.5	1.0 U	1.0	0.42	0.5 U	1	0.5	0.5 U	1	0.5
Butylbenzylphthalate	0.41	2 U	5	2	2 U	5	2	2 U	5	2	1.0 U	1.0	0.56	2 U	5	2	2 U	5	2
Di-n-Butylphthalate	47	2 U	5	2	2 U	5	2	2 U	5	2	1.0 U	1.0	0.54	2 U	5	2	2 U	5	2
Carbazole	---	0.5 U	1	0.5	0.5 U	1	0.5	0.5 U	1	0.5	1.0 U	1.0	0.31	0.5 U	1	0.5	0.5 U	1	0.5
4-Chloro-3-methylphenol	3700	0.5 U	1	0.5	0.5 U	1	0.5	0.5 U	1	0.5	5.0 U	5.0	2.4	0.5 U	1	0.5	0.5 U	1	0.5
4-Chloroaniline	---	0.5 U	1	0.5	0.5 U	1	0.5	0.5 U	1	0.5	5.0 U	5.0	2.6	0.5 U	1	0.5	0.5 U	1	0.5
bis(2-Chloroethoxy) Methane	---	0.5 U	1	0.5	0.5 U	1	0.5	0.5 U	1	0.5	1.0 U	1.0	0.56	0.5 U	1	0.5	0.5 U	1	0.5
Bis-(2-Chloroethyl) Ether	---	0.5 U	1	0.5	0.5 U	1	0.5	0.5 U	1	0.5	1.0 U	1.0	0.58	0.5 U	1	0.5	0.5 U	1	0.5
2-Chloronaphthalene	---	0.4 U	1	0.4	0.4 U	1	0.4	0.4 U	1	0.4	1.0 U	1.0	0.48	0.4 U	1	0.4	0.4 U	1	0.4
2-Chlorophenol	---	0.5 U	1	0.5	0.5 U	1	0.5	0.5 U	1	0.5	1.0 U	1.0	0.53	0.5 U	1	0.5	0.5 U	1	0.5
4-Chlorophenyl-phenylether	---	0.5 U	1	0.5	0.5 U	1	0.5	0.5 U	1	0.5	1.0 U	1.0	0.45	0.5 U	1	0.5	0.5 U	1	0.5
2,2'-Oxybis(1-Chloropropane)	---	0.5 U	1	0.5	0.5 U	1	0.5	0.5 U	1	0.5	1.0 U	1.0	0.62	0.5 U	1	0.5	0.5 U	1	0.5
Chrysene	0.018	0.1 U	0.5	0.1	0.1 U	0.5	0.1	0.1 U	0.5	0.1	1.0 U	1.0	0.55	0.1 U	0.5	0.1	0.1 U	0.5	0.1
Dibenz(a,h)anthracene	0.0018	0.1 U	0.5	0.1	0.1 U	0.5	0.1	0.1 U	0.5	0.1	1.0 U	1.0	0.48	0.1 U	0.5	0.1	0.1 U	0.5	0.1
Dibenzofuran	1.3	0.5 U	1	0.5	0.5 U	1	0.5	0.5 U	1	0.5	1.0 U	1.0	0.48	0.5 U	1	0.5	0.5 U	1	0.5
1,2-Dichlorobenzene	440	0.5 U	1	0.5	0.5 U	1	0.5	0.5 U	1	0.5	1.0 U	1.0	0.36	0.5 U	1	0.5	0.5 U	1	0.5
1,3-Dichlorobenzene	---	0.5 U	1	0.5	0.5 U	1	0.5	0.5 U	1	0.5	1.0 U	1.0	0.36	0.5 U	1	0.5	0.5 U	1	0.5
1,4-Dichlorobenzene	1.7	0.5 U	1	0.5	0.5 U	1	0.5	0.5 U	1	0.5	1.0 U	1.0	0.40	0.5 U	1	0.5	0.5 U	1	0.5
3,3'-Dichlorobenzidine	---	2 U	5	2	2 U	5	2	2 U	5	2	5.0 U	5.0	1.5	2 U	5	2	2 U	5	2
2,4-Dichlorophenol	---	0.5 U	1	0.5	0.5 U	1	0.5	0.5 U	1	0.5	5.0 U	5.0	2.6	0.5 U	1	0.5	0.5 U	1	0.5
Diethylphthalate	4,236	2 U	5	2	2 U	5	2	2 U	5	2	1.0 U	1.0	0.58	2 U	5	2	2 U	5	2
2,4-Dimethylphenol	660	0.5 U	1	0.5	0.5 U	1	0.5	0.5 U	1	0.5	1.0 U	1.0	0.36	0.5 U	1	0.5	0.5 U	1	0.5
Dimethylphthalate	1,100,000	2 U	5	2	2 U	5	2	2 U	5	2	1.0 U	1.0	0.53	2 U	5	2	2 U	5	2
4,6-Dinitro-2-Methylphenol	---	5 U	14	5	5 U	14	5	5 U	15	5	10 U	10	3.1	5 U	14	5	5 U	15	5
2,4-Dinitrophenol	---	10 U	29	10	10 U	29	10	10 U	29	10	10 U	10	3.5	10 U	29	10	10 U	30	10
2,4-Dinitrotoluene	---	1 U	5	1	1 U	5	1	1 U	5	1	5.0 U	5.0	2.5	1 U	5	1	1 U	5	1
2,6-Dinitrotoluene	---	0.5 U	1	0.5	0.5 U	1	0.5	0.5 U	1	0.5	5.0 U	5.0	2.4	0.5 U	1	0.5	0.5 U	1	0.5
bis(2-Ethylhexyl)phthalate	1.2	2 U	5	2	2 U	5	2	2 U	5	2	1.0 U	1.0	1.9	2 U	5	2	2 U	5	2

TABLE L-1
GROUNDWATER ANALYTICAL RESULTS
BOEING ISAACSON-THOMPSON
REMEDIAL INVESTIGATION

Location:		IT-MW-9			IT-MW-9			IT-MW-9			IT-MW-10			IT-MW-10			IT-MW-10		
Laboratory Sample ID:	Preliminary	6577007/6577008/UM00D			6690471/6690472/6690473/UZ00A			6789056/6789057/6789058/VJ53D			UA27G/UA27O/UA28G/UA28N/UB45G/UB45N			65825256582526/UM84D			6689140/6689141/6689142/UY55D		
Laboratory Data Package ID:	Cleanup	1295065/UM00			1316296/UZ00			1335688/VJ53			UA27/UA28/UB45			1296009/UM84			1316071/UY55		
Sample Date:	Levels	03/12/2012			6/15/2012			9/13/2012			12/06/2011			3/15/2012			6/14/2012		
		Result	Reporting Limit	Detection Limit	Result	Reporting Limit	Detection Limit	Result	Reporting Limit	Detection Limit	Result	Reporting Limit	Detection Limit	Result	Reporting Limit	Detection Limit	Result	Reporting Limit	Detection Limit
Fluoranthene	11	0.1 U	0.5	0.1	0.1 U	0.5	0.1	0.1 U	0.5	0.1	1.0 U	1.0	0.52	0.1 U	0.5	0.1	0.1 U	0.5	0.1
Fluorene	45	0.1 U	0.5	0.1	0.1 U	0.5	0.1	0.1 U	0.5	0.1	1.0 U	1.0	0.56	0.1 U	0.5	0.1	0.1 U	0.5	0.1
Hexachlorobenzene	---	0.1 U	0.5	0.1	0.1 U	0.5	0.1	0.1 U	0.5	0.1	1.0 U	1.0	0.47	0.1 U	0.5	0.1	0.1 U	0.5	0.1
Hexachlorobutadiene	---	0.5 U	1	0.5	0.5 U	1	0.5	0.5 U	1	0.5	1.0 U	1.0	0.31	0.5 U	1	0.5	0.5 U	1	0.5
Hexachlorocyclopentadiene	---	5 U	14	5	5 U	14	5	5 U	15	5	5.0 U	5.0	1.2	5 U	14	5	5 U	15	5
Hexachloroethane	---	1 U	5	1	1 U	5	1	1 U	5	1	1.0 U	1.0	0.35	1 U	5	1	1 U	5	1
Indeno(1,2,3-cd)pyrene	0.0018	0.1 U	0.5	0.1	0.1 U	0.5	0.1	0.1 U	0.5	0.1	1.0 U	1.0	0.48	0.1 U	0.5	0.1	0.1 U	0.5	0.1
Isophorone	---	0.5 U	1	0.5	0.5 U	1	0.5	0.5 U	1	0.5	1.0 U	1.0	0.48	0.5 U	1	0.5	0.5 U	1	0.5
1-Methylnaphthalene	2.3	0.1 U	0.5	0.1	0.1 U	0.5	0.1	0.1 U	0.5	0.1	1.0 U	1.0	0.48	0.1 U	0.5	0.1	0.1 U	0.5	0.1
2-Methylnaphthalene	64	0.1 U	0.5	0.1	0.1 U	0.5	0.1	0.1 U	0.5	0.1	1.0 U	1.0	0.48	0.1 U	0.5	0.1	0.1 U	0.5	0.1
2-Methylphenol	3100	0.5 U	1	0.5	0.5 U	1	0.5	0.5 U	1	0.5	1.0 U	1.0	0.53	0.5 U	1	0.5	0.5 U	1	0.5
4-Methylphenol	330	0.5 U	1	0.5	0.5 U	1	0.5	0.5 U	1	0.5	**1.8**	1.0	0.52	0.5 U	1	0.5	**71**	1	0.5
Naphthalene	26	**0.2** J1	0.5	0.1	**0.1** J1	0.5	0.1	0.1 U	0.5	0.1	1.0 U	1.0	0.52	0.1 U	0.5	0.1	**0.1** J1	0.5	0.1
2-Nitroaniline	---	0.5 U	1	0.5	0.5 U	1	0.5	0.5 U	1	0.5	5.0 U	5.0	2.6	0.5 U	1	0.5	0.5 U	1	0.5
3-Nitroaniline	---	0.5 U	1	0.5	0.5 U	1	0.5	0.5 U	1	0.5	5.0 U	5.0	2.3	0.5 U	1	0.5	0.5 U	1	0.5
4-Nitroaniline	---	0.5 U	1	0.5	0.5 U	1	0.5	0.5 U	1	0.5	5.0 U	5.0	2.2	0.5 U	1	0.5	0.5 U	1	0.5
Nitrobenzene	---	0.5 U	1	0.5	0.5 U	1	0.5	0.5 U	1	0.5	1.0 U	1.0	0.58	0.5 U	1	0.5	0.5 U	1	0.5
2-Nitrophenol	---	0.5 U	1	0.5	0.5 U	1	0.5	0.5 U	1	0.5	5.0 U	5.0	2.0	0.5 U	1	0.5	0.5 U	1	0.5
4-Nitrophenol	---	10 U	29	10	10 U	29	10	10 U	29	10	5.0 U	5.0	2.6	10 U	29	10	10 U	30	10
N-Nitroso-Di-N-Propylamine	---	0.5 U	1	0.5	0.5 U	1	0.5	0.5 U	1	0.5	1.0 U	1.0	0.56	0.5 U	1	0.5	0.5 U	1	0.5
N-Nitrosodiphenylamine	1.96	0.5 U	1	0.5	0.5 U	1	0.5	0.5 U	1	0.5	1.0 U	1.0	0.46	0.5 U	1	0.5	0.5 U	1	0.5
Di-n-Octyl phthalate	---	2 U	5	2	2 U	5	2	2 U	5	2	1.0 U	1.0	0.51	2 U	5	2	2 U	5	2
Pentachlorophenol	---	1 U	5	1	1 U	5	1	1 UJ	5	1	5.0 U	5.0	2.4	1 U	5	1	1 U	5	1
Phenanthrene	---	0.1 U	0.5	0.1	0.1 U	0.5	0.1	0.1 U	0.5	0.1	1.0 U	1.0	0.56	0.1 U	0.5	0.1	0.1 U	0.5	0.1
Phenol	41,000	0.5 U	1	0.5	0.5 U	1	0.5	0.5 U	1	0.5	1.0 U	1.0	0.52	0.5 U	1	0.5	0.5 U	1	0.5
Pyrene	9.8	0.1 U	0.5	0.1	0.1 U	0.5	0.1	0.1 U	0.5	0.1	1.0 U	1.0	0.55	0.1 U	0.5	0.1	0.1 U	0.5	0.1
1,2,4-Trichlorobenzene	1.13	0.5 U	1	0.5	0.5 U	1	0.5	0.5 U	1	0.5	1.0 U	1.0	0.38	0.5 U	1	0.5	0.5 U	1	0.5
2,4,5-Trichlorophenol	---	0.5 U	1	0.5	0.5 U	1	0.5	0.5 U	1	0.5	5.0 U	5.0	2.2	0.5 U	1	0.5	0.5 U	1	0.5
2,4,6-Trichlorophenol	---	0.5 U	1	0.5	0.5 U	1	0.5	0.5 U	1	0.5	5.0 U	5.0	2.4	0.5 U	1	0.5	0.5 U	1	0.5
cPAHs (µg/L)																			
Method SW8270D-SIM																			
Benzo(a)anthracene	0.0018	0.0048 U	0.0095	0.0048	0.0048 U	0.0096	0.0048	0.0049 U	0.0098	0.0049	0.012 U	0.012	0.0074	**0.0080** J1	0.0099	0.0049	0.0049 U	0.0099	0.0049
Benzo(a)pyrene	0.00018	0.0048 U	0.0095	0.0048	0.0048 U	0.0096	0.0048	0.0049 U	0.0098	0.0049	0.012 U	0.012	0.0056	**0.010**	0.0099	0.0049	0.0049 U	0.0099	0.0049
Benzo(b)fluoranthene	0.0018	0.0048 U	0.0095	0.0048	0.0048 U	0.0096	0.0048	0.0049 U	0.0098	0.0049	NA	NA	NA	**0.011**	0.0099	0.0049	0.0049 U	0.0099	0.0049
Benzo(k)fluoranthene	0.0018	0.0048 U	0.0095	0.0048	0.0048 U	0.0096	0.0048	0.0049 U	0.0098	0.0049	NA	NA	NA	**0.0050** J1	0.0099	0.0049	0.0049 U	0.0099	0.0049
Total Benzofluoranthenes	0.0018	NA	NA	NA	NA	NA	NA	NA	NA	NA	0.024 UJ	0.024	0.012	**0.016** J	NA	NA	NA	NA	NA
Chrysene	0.018	0.0048 U	0.0095	0.0048	0.0048 U	0.0096	0.0048	0.0049 U	0.0098	0.0049	0.012 U	0.012	0.0054	**0.0090** J1	0.0099	0.0049	0.0049 U	0.0099	0.0049
Dibenz(a,h)anthracene	0.0018	0.0038 U	0.0095	0.0038	0.0038 U	0.0096	0.0038	0.0039 U	0.0098	0.0039	0.012 U	0.012	0.0057	0.0039 U	0.0099	0.0039	0.0039 U	0.0099	0.0039
Indeno(1,2,3-cd)pyrene	0.0018	0.0038 U	0.0095	0.0038	0.0038 U	0.0096	0.0038	0.0039 U	0.0098	0.0039	0.012 U	0.012	0.0054	**0.0060** J1	0.0099	0.0039	0.0039 U	0.0099	0.0039
Pyrene	9.8	0.0095 U	0.048	0.0095	0.0096 U	0.048	0.0096	0.0098 U	0.049	0.0098	NA	NA	NA	**0.016** J1	0.049	0.0099	0.010 U	0.049	0.010
cPAH TEQ	0.00018	ND	NA	NA	ND	NA	NA	ND	NA	NA	ND	NA	NA	**0.0131** J	NA	NA	ND	NA	NA
PCBs (µg/L)																			
Method SW8082																			
Aroclor 1016	0.000023	0.0059 U	0.0099	0.0059	0.0057 U	0.0095	0.0057	0.0057 U	0.0095	0.0057	0.010 U	0.010	0.0025	0.0057 U	0.0095	0.0057	0.0058 U	0.0097	0.0058
Aroclor 1221	---	0.0059 U	0.0099	0.0059	0.0057 U	0.0095	0.0057	0.0057 U	0.0095	0.0057	0.010 U	0.010	0.0028	0.0057 U	0.0095	0.0057	0.0058 U	0.0097	0.0058
Aroclor 1232	---	0.0069 U	0.0099	0.0069	0.0066 U	0.0095	0.0066	0.0066 U	0.0095	0.0066	0.010 U	0.010	0.0028	0.0067 U	0.0095	0.0067	0.0068 U	0.0097	0.0068
Aroclor 1242	0.000023	0.0059 U	0.0099	0.0059	0.0057 U	0.0095	0.0057	0.0057 U	0.0095	0.0057	0.010 U	0.010	0.0028	0.0057 U	0.0095	0.0057	0.0058 U	0.0097	0.0058
Aroclor 1248	0.000023	0.0049 U	0.0099	0.0049	0.0047 U	0.0095	0.0047	0.0047 U	0.0095	0.0047	0.010 U	0.010	0.0028	0.0048 U	0.0095	0.0048	0.0048 U	0.0097	0.0048
Aroclor 1254	0.0000055	0.0049 U	0.0099	0.0049	0.0047 U	0.0095	0.0047	0.0047 U	0.0095	0.0047	0.010 U	0.010	0.0028	0.0048 U	0.0095	0.0048	0.0048 U	0.0097	0.0048
Aroclor 1260	0.000023	0.0049 U	0.0099	0.0049	0.0047 U	0.0095	0.0047	0.0047 U	0.0095	0.0047	0.010 U	0.010	0.0028	0.0048 U	0.0095	0.0048	0.0065 J	0.0097	0.0048
Total PCBs	0.000023	ND	NA	NA	ND	NA	NA	ND	NA	NA	ND	NA	NA	ND	NA	NA	ND	NA	NA

TABLE L-1
GROUNDWATER ANALYTICAL RESULTS
BOEING ISAACSON-THOMPSON
REMEDIAL INVESTIGATION

Location:		IT-MW-9			IT-MW-9			IT-MW-9			IT-MW-10			IT-MW-10			IT-MW-10		
Laboratory Sample ID:	Preliminary	6577007/6577008/UM00D			6690471/6690472/6690473/UZ00A			6789056/6789057/6789058/VJ53D			UA27G/UA27O/UA28G/UA28N/UB45G/UB45N			65825256582526/UM84D			6689140/6689141/6689142/UY55D		
Laboratory Data Package ID:	Cleanup	1295065/UM00			1316296/UZ00			1335688/VJ53			UA27/UA28/UB45			1296009/UM84			1316071/UY55		
Sample Date:	Levels	03/12/2012			6/15/2012			9/13/2012			12/06/2011			3/15/2012			6/14/2012		
		Result	Reporting Limit	Detection Limit	Result	Reporting Limit	Detection Limit	Result	Reporting Limit	Detection Limit	Result	Reporting Limit	Detection Limit	Result	Reporting Limit	Detection Limit	Result	Reporting Limit	Detection Limit
TOTAL PETROLEUM HYDROCARBONS (mg/L)																			
NWTPH-Dx																			
Diesel-Range Organics	0.5	0.067 U	0.24	0.067	0.029 U	0.095	0.029	0.029 U	0.098	0.029	0.10 U	0.10	0.022	0.070 U	0.25	0.070	0.029 U	0.097	0.029
Oil-Range Organics	0.5	0.95 U	2.9	0.95	0.067 U	0.240	0.067	0.069 U	0.250	0.069	0.20 U	0.20	0.044	1.0 U	3.0	1.0	0.068 U	0.240	0.068
NWTPH-G																			
Gasoline-Range Organics	1.0/0.8	0.05 U	0.25	0.05	0.05 U	0.25	0.05	0.05 U	0.25	0.05	0.25 U	0.25	0.06	0.05 U	0.25	0.05	0.05 U	0.25	0.05
TOTAL METALS (µg/L)																			
Method 200.8																			
Antimony	---	0.42 U	1.0	0.42	0.33 U	1.0	0.33	0.33 U	1.0	0.33	**0.4**	0.2	0.010	**0.45** J1	1.0	0.42	0.42 U	1.0	0.42
Arsenic	---	**6.8**	2.0	0.95	**3.7**	2.0	0.20	**5.7**	2.0	0.40	**8.6**	0.2	0.048	0.95 U	2.0	0.95	**169**	2.0	0.95
Barium	---	**18.4**	2.0	0.69	**7.7**	2.0	0.41	**59.7**	2.0	0.41	**4.0**	0.5	0.020	**2.7**	2.0	0.69	**12.4**	2.0	0.69
Beryllium	---	0.13 U	0.50	0.13	0.025 U	0.50	0.025	**0.031** J1	0.50	0.025	0.2 U	0.2	0.021	0.13 U	0.50	0.13	0.13 U	0.50	0.13
Cadmium	---	0.20 U	0.50	0.20	0.048 U	0.50	0.048	**0.45** J1	0.50	0.082	0.1 U	0.1	0.010	0.20 U	0.50	0.20	**0.28** J1	0.50	0.20
Chromium	---	0.60 U	2.0	0.60	**0.20** J1	2.0	0.10	0.50 U	2.0	0.50	0.5 U	0.5	0.045	**1.7** J1	2.0	0.60	**1.8** J1	2.0	0.60
Copper	---	**1.1** J1	2.0	0.38	**1.2** J1	2.0	0.15	**1.7** J1	2.0	0.40	**1.7**	0.5	0.158	**1.0** J1	2.0	0.38	**1.3** J1	2.0	0.38
Lead	---	0.080 U	1.0	0.080	**0.099** J1	1.0	0.034	**0.035** J1	1.0	0.034	**0.2**	0.1	0.046	**0.26** J1	1.0	0.080	**0.66** J1	1.0	0.080
Nickel	---	**1.1** J1	2.0	0.50	**1.7** J1	2.0	0.13	**9.9**	2.0	0.35	**1.4**	0.5	0.079	**0.63** J1	2.0	0.50	**4.1**	2.0	0.50
Selenium	---	0.27 U	2.0	0.27	0.18 U	2.0	0.18	0.50 U	2.0	0.50	0.5 U	0.5	0.127	0.27 U	2.0	0.27	0.27 U	2.0	0.27
Silver	---	0.098 U	0.50	0.098	0.10 U	0.50	0.10	0.10 U	0.50	0.10	0.2 U	0.2	0.008	0.098 U	0.50	0.098	0.098 U	0.50	0.098
Thallium	---	0.15 U	0.50	0.15	0.029 U	0.50	0.029	0.15 U	0.50	0.15	0.2 U	0.2	0.004	0.15 U	0.50	0.15	0.15 U	0.50	0.15
Zinc	---	4.0 U	15.0	4.0	**2.0** J1	15.0	1.1	**18.5**	15.0	1.1	4 U	4	0.50	4.0 U	15.0	4.0	4.0 U	15.0	4.0
Method SW7196A (mg/L)																			
Chromium VI	0.00058	0.010 U	0.010	0.00300	0.010 U	0.010	0.00300	0.010 U	0.010	0.00300	0.010 U	0.010	0.00300	0.010 U	0.010	0.00300	0.010 U	0.010	0.00300
Method SW7470A/EPA 1631E (ng/L)																			
Mercury	12	**0.932**	5.00	1.60	**2.07**	0.500	0.160	1.60 U	5.00	1.60	20.0 U	20.0	2.60	**7.08**	5.00	1.60	3.75	0.500	0.160
DISSOLVED METALS (µg/L)																			
Methods 200.8/SW7196A																			
Antimony	150	0.42 U	1.0	0.42	0.33 U	1.0	0.33	0.33 U	1.0	0.33	**0.4**	0.2	0.010	0.42 U	1.0	0.42	0.42 U	1.0	0.42
Arsenic	8	**5.5**	2.0	0.95	**2.9**	2.0	0.20	**1.4** J1	2.0	0.40	**8.0**	0.2	0.048	**1.0** J1	2.0	0.95	**140**	2.0	0.95
Barium	770	**18.2**	2.0	0.69	**7.1**	2.0	0.41	**64.7**	2.0	0.41	**3.6**	0.5	0.020	**1.6** J1	2.0	0.69	**12.7**	2.0	0.69
Beryllium	12	0.13 U	0.50	0.13	0.025 U	0.50	0.025	**0.040** J1	0.50	0.025	0.2 U	0.2	0.021	0.13 U	0.50	0.13	0.13 U	0.50	0.13
Cadmium	0.25	0.20 U	0.50	0.20	0.048 U	0.50	0.048	**0.47** J1	0.50	0.082	0.1 U	0.1	0.010	0.20 U	0.50	0.20	0.20 U	0.50	0.20
Chromium	74	0.60 U	2.0	0.60	**0.20** J1	2.0	0.10	0.50 U	2.0	0.50	**0.7**	0.5	0.045	**1.4** J1	2.0	0.60	**1.7** J1	2.0	0.60
Copper	8	**0.92** J1	2.0	0.38	**0.88** J1	2.0	0.15	**1.1** J1	2.0	0.40	**2.4**	0.5	0.158	**0.76** J1	2.0	0.38	**0.55** J1	2.0	0.38
Lead	2.5	0.080 U	1.0	0.080	0.034 U	1.0	0.034	0.034 U	1.0	0.034	**0.1**	0.1	0.046	0.080 U	1.0	0.080	0.080 U	1.0	0.080
Nickel	8.2	**1.2** J1	2.0	0.50	**1.9** J1	2.0	0.13	**9.1**	2.0	0.35	**1.6**	0.5	0.079	0.50 U	2.0	0.50	**3.6**	2.0	0.50
Selenium	5	0.27 U	2.0	0.27	0.18 U	2.0	0.18	0.50 U	2.0	0.50	0.5 U	0.5	0.127	0.27 U	2.0	0.27	0.27 U	2.0	0.27
Silver	22	0.098 U	0.50	0.098	0.10 U	0.50	0.10	0.10 U	0.50	0.10	0.2 U	0.2	0.008	0.098 U	0.50	0.098	0.098 U	0.50	0.098
Thallium	0.47	0.15 U	0.50	0.15	0.029 U	0.50	0.029	0.15 U	0.50	0.15	0.2 U	0.2	0.004	0.15 U	0.50	0.15	0.15 U	0.50	0.15
Zinc	56	**5.1** J1	15.0	4.0	**2.6** J1	15.0	1.1	**17.9**	15.0	1.1	4 U	4	0.50	4.0 U	15.0	4.0	4.0 U	15.0	4.0
Method SW7470A/EPA 1631E (ng/L)																			
Mercury	12	**0.853**	5.00	1.60	**1.30**	0.500	0.160	1.60 U	5.00	1.60	20.0 U	20.0	2.60	**2.51**	5.00	1.60	3.20 U	10.0	3.20
CONVENTIONALS (mg/L)																			
Chloride (Method 300.0)	---	NA	NA	NA	**275**	40.0	20.0	**2810**	200	100	NA	NA	NA	NA	NA	NA	**2.6**	0.40	0.20
Nitrate (Method 300.0)	---	0.05 U	0.10	0.050	**0.088** J1	0.10	0.050	**0.050** J1	0.10	0.050	**0.1**	0.1	0.007	**0.32**	0.10	0.050	0.050 U	0.10	0.050
Sulfate (Method 300.0)	---	**75.6**	20.0	6.0	**51.3**	10.0	3.0	**305**	50.0	15.0	**4.9**	0.2	0.118	**3.2**	1.0	0.30	0.30 U	1.0	0.30
Total Dissolved Solids (Method 160.1)	---	**1140**	240	77.6	**552**	120	38.8	**3890**	600	194	**116**	5.0	5.00	**53.5**	30.0	9.7	**137**	30.0	9.7
FIELD PARAMETERS																			
Temperature (°C)	---	10.27	NA	NA	10.35	NA	NA	14.49	NA	NA	13.36	NA	NA	9.34	NA	NA	13.19	NA	NA
Conductivity (uS/cm)	---	1590	NA	NA	748	NA	NA	5572	NA	NA	188	NA	NA	52	NA	NA	157	NA	NA
Dissolved Oxygen (mg/L)	---	3.23	NA	NA	2.98	NA	NA	0.63	NA	NA	1.51	NA	NA	8.33	NA	NA	0.60	NA	NA
pH (SU)	---	6.01	NA	NA	7.40	NA	NA	6.00	NA	NA	8.53	NA	NA	8.35	NA	NA	5.80	NA	NA
ORP (mV)	---	82.5	NA	NA	66.3	NA	NA	64.5	NA	NA	35.3	NA	NA	33.9	NA	NA	-17.7	NA	NA
Turbidity (NTU)	---	37.39	NA	NA	19.58	NA	NA	6.15	NA	NA	4.78	NA	NA	8.83	NA	NA	7.08	NA	NA
Ferrous Iron (mg/L)	---	1.0	NA	NA	0.8	NA	NA	1.2	NA	NA	NA	NA	NA	0.0	NA	NA	1.8	NA	NA

TABLE L-1
GROUNDWATER ANALYTICAL RESULTS
BOEING ISAACSON-THOMPSON
REMEDIAL INVESTIGATION

Location:		IT-MW-10			IT-MW-11			IT-MW-11			IT-MW-11			IT-MW-11			IT-MW-12		
Laboratory Sample ID:	Preliminary	6789059/6789060/6789061/VJ53E			UA44C/UA44K/UA45C/UA45J/UB46C/UB46J			6582519/6582520/UM84A			6693947/6693948/6693949/UZ37B			6789047/6789048/6789049/VJ53A			UA86C/UA86G/UA87C/UA87F		
Laboratory Data Package ID:	Cleanup	1335688/VJ53			UA44/UA45/UB46			1296009/UM84			1317022/UZ37			1335688/VJ53			UA86/UA87		
Sample Date:	Levels	9/13/2012			12/07/2011			3/15/2012			6/19/2012			9/13/2012			12/12/2011		
		Result	Reporting Limit	Detection Limit	Result	Reporting Limit	Detection Limit	Result	Reporting Limit	Detection Limit	Result	Reporting Limit	Detection Limit	Result	Reporting Limit	Detection Limit	Result	Reporting Limit	Detection Limit
VOLATILES (µg/L)																			
Method SW8260C																			
Acetone	110,000	**7.1**	5.0	3.0	5.0 U	5.0	2.1	3.0 U	5.0	3.0	3.0 U	5.0	3.0	3.0 U	5.0	3.0	5.0 U	5.0	2.1
Acrolein	---	5.0 U	25	5.0	5.0 UJ	5.0	2.5	5.0 U	25	5.0	5.0 U	25	5.0	5.0 U	25	5.0	5.0 U	5.0	2.5
Acrylonitrile	0.057	1.0 U	5.0	1.0	1.0 U	1.0	0.60	1.0 U	5.0	1.0	1.0 U	5.0	1.0	1.0 U	5.0	1.0	1.0 U	1.0	0.60
Benzene	2	0.1 U	0.2	0.1	0.2 U	0.2	0.03	0.1 U	0.2	0.1	0.1 U	0.2	0.1	0.1 U	0.2	0.1	0.2 U	0.2	0.03
Bromobenzene	---	0.1 U	0.5	0.1	0.2 U	0.2	0.06	0.1 U	0.5	0.1	0.1 U	0.5	0.1	0.1 U	0.5	0.1	0.2 U	0.2	0.06
Bromochloromethane	---	0.1 U	0.5	0.1	0.2 U	0.2	0.06	0.1 U	0.5	0.1	0.1 U	0.5	0.1	0.1 U	0.5	0.1	0.2 U	0.2	0.06
Bromodichloromethane	17	0.1 U	0.5	0.1	0.2 U	0.2	0.05	0.1 U	0.5	0.1	0.1 U	0.5	0.1	0.1 U	0.5	0.1	0.2 U	0.2	0.05
Bromoform	---	0.1 U	0.5	0.1	0.2 U	0.2	0.06	0.1 U	0.5	0.1	0.1 UJ	0.5	0.1	0.1 U	0.5	0.1	0.2 UJ	0.2	0.06
Bromomethane	---	0.1 U	0.5	0.1	1.0 U	1.0	0.25	0.1 U	0.5	0.1	0.1 U	0.5	0.1	0.1 U	0.5	0.1	1.0 U	1.0	0.25
2-Butanone	73,000	1.0 U	5.0	1.0	5.0 UJ	5.0	0.81	1.0 U	5.0	1.0	1.0 U	5.0	1.0	1.0 U	5.0	1.0	5.0 U	5.0	0.81
n-Butylbenzene	780	0.1 U	0.5	0.1	0.2 U	0.2	0.02	0.1 U	0.5	0.1	0.1 U	0.5	0.1	0.1 U	0.5	0.1	0.2 U	0.2	0.02
sec-Butylbenzene	---	0.1 U	0.5	0.1	0.2 U	0.2	0.02	0.1 U	0.5	0.1	0.1 U	0.5	0.1	0.1 U	0.5	0.1	0.2 U	0.2	0.02
tert-Butylbenzene	---	0.1 U	0.5	0.1	0.2 U	0.2	0.03	0.1 U	0.5	0.1	0.1 U	0.5	0.1	0.1 U	0.5	0.1	0.2 U	0.2	0.03
Carbon Disulfide	3900	0.4 U	0.5	0.4	0.2 U	0.2	0.04	0.4 U	0.5	0.4	**0.6**	0.5	0.4	0.4 U	0.5	0.4	0.2 U	0.2	0.04
Carbon Tetrachloride	0.46	0.1 U	0.2	0.1	0.2 U	0.2	0.04	0.1 U	0.2	0.1	0.1 U	0.2	0.1	0.1 U	0.2	0.1	0.2 U	0.2	0.04
Chlorobenzene	270	0.1 U	0.5	0.1	0.2 U	0.2	0.02	0.1 U	0.5	0.1	0.1 U	0.5	0.1	0.1 U	0.5	0.1	0.2 U	0.2	0.02
Chloroethane	21,000	0.1 U	0.5	0.1	0.2 U	0.2	0.09	0.1 U	0.5	0.1	0.1 U	0.5	0.1	0.1 U	0.5	0.1	0.2 U	0.2	0.09
Chloroform	9.4	0.1 U	0.2	0.1	0.2 U	0.2	0.03	0.1 U	0.2	0.1	0.1 U	0.2	0.1	0.1 U	0.2	0.1	0.2 U	0.2	0.03
Chloromethane	10.3	0.2 U	0.5	0.2	0.5 U	0.5	0.10	0.2 U	0.5	0.2	0.2 U	0.5	0.2	0.2 U	0.5	0.2	0.5 U	0.5	0.10
2-Chlorotoluene	---	0.1 U	0.5	0.1	0.2 U	0.2	0.02	0.1 U	0.5	0.1	0.1 U	0.5	0.1	0.1 U	0.5	0.1	0.2 U	0.2	0.02
4-Chlorotoluene	2600	0.1 U	0.5	0.1	0.2 U	0.2	0.02	0.1 U	0.5	0.1	0.1 U	0.5	0.1	0.1 U	0.5	0.1	0.2 U	0.2	0.02
1,2-Dibromo-3-chloropropane	---	0.2 U	0.5	0.2	0.5 U	0.5	0.04	0.2 U	0.5	0.2	0.2 U	0.5	0.2	0.2 U	0.5	0.2	0.5 U	0.5	0.04
Dibromochloromethane	---	0.1 U	0.5	0.1	0.2 U	0.2	0.05	0.1 U	0.5	0.1	0.1 U	0.5	0.1	0.1 U	0.5	0.1	0.2 U	0.2	0.05
Dibromomethane	---	0.1 U	0.5	0.1	0.2 U	0.2	0.14	0.1 U	0.5	0.1	0.1 U	0.5	0.1	0.1 U	0.5	0.1	0.2 U	0.2	0.14
trans-1,4-Dichloro-2-butene	---	1.0 U	5.0	1.0	1.0 UJ	1.0	0.32	1.0 U	5.0	1.0	1.0 UJ	5.0	1.0	1.0 U	5.0	1.0	1.0 UJ	1.0	0.32
1,2-Dichlorobenzene	440	0.1 U	0.5	0.1	0.2 U	0.2	0.04	0.1 U	0.5	0.1	0.1 U	0.5	0.1	0.1 U	0.5	0.1	0.2 U	0.2	0.04
1,3-Dichlorobenzene	960	0.1 U	0.5	0.1	0.2 U	0.2	0.04	0.1 U	0.5	0.1	0.1 U	0.5	0.1	0.1 U	0.5	0.1	0.2 U	0.2	0.04
1,4-Dichlorobenzene	1.7	0.1 U	0.5	0.1	0.2 U	0.2	0.04	0.1 U	0.5	0.1	0.1 U	0.5	0.1	0.1 U	0.5	0.1	0.2 U	0.2	0.04
1,1-Dichloroethane	33	0.1 U	0.5	0.1	**0.2** J1	0.2	0.05	**0.2** J1	0.5	0.1	**0.2** J1	0.5	0.1	**0.2** J1	0.5	0.1	0.2 U	0.2	0.05
1,2-Dichloroethane	3.6	0.1 U	0.2	0.1	0.2 U	0.2	0.07	0.1 U	0.2	0.1	0.1 U	0.2	0.1	0.1 U	0.2	0.1	0.2 U	0.2	0.07
1,1-Dichloroethene	3.2	0.1 U	0.2	0.1	0.2 U	0.2	0.05	0.1 U	0.2	0.1	0.1 U	0.2	0.1	0.1 U	0.2	0.1	0.2 U	0.2	0.05
cis-1,2-Dichloroethene	130	**0.2** J1	0.2	0.1	0.2 U	0.2	0.04	0.1 U	0.2	0.1	0.1 U	0.2	0.1	0.1 U	0.2	0.1	0.2 U	0.2	0.04
trans-1,2-Dichloroethene	940	0.1 U	0.2	0.1	0.2 U	0.2	0.05	0.1 U	0.2	0.1	0.1 U	0.2	0.1	0.1 U	0.2	0.1	0.2 U	0.2	0.05
1,2-Dichloropropane	3.7	0.1 U	0.5	0.1	0.2 U	0.2	0.04	0.1 U	0.5	0.1	0.1 U	0.5	0.1	0.1 U	0.5	0.1	0.2 U	0.2	0.04
1,3-Dichloropropane	---	0.1 U	0.5	0.1	0.2 U	0.2	0.06	0.1 U	0.5	0.1	0.1 U	0.5	0.1	0.1 U	0.5	0.1	0.2 U	0.2	0.06
2,2-Dichloropropane	---	0.1 U	0.5	0.1	0.2 U	0.2	0.05	0.1 U	0.5	0.1	0.1 U	0.5	0.1	0.1 U	0.5	0.1	0.2 U	0.2	0.05
1,1-Dichloropropene	---	0.1 U	0.5	0.1	0.2 U	0.2	0.03	0.1 U	0.5	0.1	0.1 U	0.5	0.1	0.1 U	0.5	0.1	0.2 U	0.2	0.03
cis-1,3-Dichloropropene	---	0.1 U	0.2	0.1	0.2 U	0.2	0.06	0.1 U	0.2	0.1	0.1 U	0.2	0.1	0.1 U	0.2	0.1	0.2 U	0.2	0.06
trans-1,3-Dichloropropene	---	0.1 U	0.2	0.1	0.2 U	0.2	0.08	0.1 U	0.2	0.1	0.1 U	0.2	0.1	0.1 U	0.2	0.1	0.2 U	0.2	0.08
Ethylbenzene	1.7	0.1 U	0.5	0.1	0.2 U	0.2	0.04	0.1 U	0.5	0.1	0.1 U	0.5	0.1	0.1 U	0.5	0.1	0.2 U	0.2	0.04
Ethylene Dibromide	---	0.1 U	0.5	0.1	0.2 U	0.2	0.08	0.1 U	0.5	0.1	0.1 U	0.5	0.1	0.1 U	0.5	0.1	0.2 U	0.2	0.08
Hexachlorobutadiene	---	0.1 U	0.5	0.1	0.5 U	0.5	0.07	0.1 U	0.5	0.1	0.1 U	0.5	0.1	0.1 U	0.5	0.1	0.5 U	0.5	0.07
2-Hexanone	3200	1.0 U	5.0	1.0	5.0 U	5.0	0.90	1.0 U	5.0	1.0	1.0 U	5.0	1.0	1.0 U	5.0	1.0	5.0 U	5.0	0.90
Isopropylbenzene	270	0.1 U	0.5	0.1	0.2 U	0.2	0.02	0.1 U	0.5	0.1	0.1 U	0.5	0.1	0.1 U	0.5	0.1	0.2 U	0.2	0.02
4-Isopropyltoluene	---	**0.2** J1	0.5	0.1	0.2 U	0.2	0.03	0.1 U	0.5	0.1	0.1 U	0.5	0.1	0.1 U	0.5	0.1	0.2 U	0.2	0.03
Methyl Iodide	---	0.1 U	0.5	0.1	1.0 U	1.0	0.23	0.1 U	0.5	0.1	0.1 U	0.5	0.1	0.1 U	0.5	0.1	1.0 U	1.0	0.23
4-Methyl-2-Pentanone (MIBK)	19,000	1.0 U	5.0	1.0	5.0 U	5.0	0.97	1.0 U	5.0	1.0	1.0 U	5.0	1.0	1.0 U	5.0	1.0	5.0 U	5.0	0.97
Methylene Chloride	230	0.2 U	0.5	0.2	0.5 U	0.5	0.48	0.2 U	0.5	0.2	0.2 U	0.5	0.2	0.2 U	0.5	0.2	0.5 U	0.5	0.48
Naphthalene	26	**0.1** J1	0.5	0.1	0.5 U	0.5	0.12	0.1 U	0.5	0.1	0.1 U	0.5	0.1	0.1 U	0.5	0.1	0.5 U	0.5	0.12
n-Propylbenzene	530	0.1 U	0.5	0.1	0.2 U	0.2	0.02	0.1 U	0.5	0.1	0.1 U	0.5	0.1	0.1 U	0.5	0.1	0.2 U	0.2	0.02
Styrene	77,000	0.1 U	0.5	0.1	0.2 U	0.2	0.04	0.1 U	0.5	0.1	0.1 U	0.5	0.1	0.1 U	0.5	0.1	0.2 U	0.2	0.04
1,1,1,2-Tetrachloroethane	---	0.1 U	0.5	0.1	0.2 U	0.2	0.04	0.1 U	0.5	0.1	0.1 U	0.5	0.1	0.1 U	0.5	0.1	0.2 U	0.2	0.04
1,1,2,2-Tetrachloroethane	0.33	0.1 U	0.2	0.1	0.2 U	0.2	0.06	0.1 U	0.2	0.1	0.1 U	0.2	0.1	0.1 U	0.2	0.1	0.2 U	0.2	0.06
Tetrachloroethene	3.3	0.1 U	0.2	0.1	0.2 U	0.2	0.05	0.1 U	0.2	0.1	0.1 U	0.2	0.1	0.1 U	0.2	0.1	0.2 U	0.2	0.05
Toluene	1300	**2.0**	0.2	0.1	0.2 U	0.2	0.04	0.1 U	0.2	0.1	0.1 U	0.2	0.1	0.1 U	0.2	0.1	0.2 U	0.2	0.04
1,1,2-Trichloro-1,2,2-trifuoroethane	59,000	0.2 U	0.5	0.2	0.2 U	0.2	0.04	0.2 U	0.5	0.2	0.2 U	0.5	0.2	0.2 U	0.5	0.2	0.2 U	0.2	0.04
1,2,3-Trichlorobenzene	---	0.1 U	0.5	0.1	0.5 U	0.5	0.11	0.1 U	0.5	0.1	0.1 U	0.5	0.1	0.1 U	0.5	0.1	0.5 U	0.5	0.11

TABLE L-1
GROUNDWATER ANALYTICAL RESULTS
BOEING ISAACSON-THOMPSON
REMEDIAL INVESTIGATION

Location:		IT-MW-10			IT-MW-11			IT-MW-11			IT-MW-11			IT-MW-11			IT-MW-12		
Laboratory Sample ID:	Preliminary	6789059/6789060/6789061/VJ53E			UA44C/UA44K/UA45C/UA45J/UB46C/UB46J			6582519/6582520/UM84A			6693947/6693948/6693949/UZ37B			6789047/6789048/6789049/VJ53A			UA86C/UA86G/UA87C/UA87F		
Laboratory Data Package ID:	Cleanup	1335688/VJ53			UA44/UA45/UB46			1296009/UM84			1317022/UZ37			1335688/VJ53			UA86/UA87		
Sample Date:	Levels	9/13/2012			12/07/2011			3/15/2012			6/19/2012			9/13/2012			12/12/2011		
		Result	Reporting Limit	Detection Limit	Result	Reporting Limit	Detection Limit	Result	Reporting Limit	Detection Limit	Result	Reporting Limit	Detection Limit	Result	Reporting Limit	Detection Limit	Result	Reporting Limit	Detection Limit
1,2,4-Trichlorobenzene	1.13	0.1 U	0.5	0.1	0.5 U	0.5	0.11	0.1 U	0.5	0.1	0.1 U	0.5	0.1	0.1 U	0.5	0.1	0.5 U	0.5	0.11
1,1,1-Trichloroethane	46,000	0.1 U	0.5	0.1	0.2 U	0.2	0.04	0.1 U	0.5	0.1	0.1 U	0.5	0.1	0.1 U	0.5	0.1	0.2 U	0.2	0.04
1,1,2-Trichloroethane	2.3	0.1 U	0.2	0.1	0.2 U	0.2	0.13	0.1 U	0.2	0.1	0.1 U	0.2	0.1	0.1 U	0.2	0.1	0.2 U	0.2	0.13
Trichloroethene	1.4	0.1 U	0.2	0.1	0.2 U	0.2	0.05	0.1 U	0.2	0.1	0.1 U	0.2	0.1	0.1 U	0.2	0.1	0.2 U	0.2	0.05
Trichlorofluoromethane	6900	0.1 U	0.5	0.1	0.2 U	0.2	0.04	0.1 U	0.5	0.1	0.1 U	0.5	0.1	0.1 U	0.5	0.1	0.2 U	0.2	0.04
1,2,3-Trichloropropane	---	0.3 U	1.0	0.3	0.5 U	0.5	0.13	0.3 U	1	0.3	0.3 U	1.0	0.3	0.3 U	1.0	0.3	0.5 U	0.5	0.13
1,2,4-Trimethylbenzene	303	0.1 U	0.5	0.1	0.2 U	0.2	0.02	0.1 U	0.5	0.1	0.1 U	0.5	0.1	0.1 U	0.5	0.1	0.2 U	0.2	0.02
1,3,5-Trimethylbenzene	303	0.1 U	0.5	0.1	0.2 U	0.2	0.02	0.1 U	0.5	0.1	0.1 U	0.5	0.1	0.1 U	0.5	0.1	0.2 U	0.2	0.02
Vinyl Acetate	---	0.2 U	0.5	0.2	1.0 UJ	1.0	0.07	0.2 U	0.5	0.2	0.2 U	0.5	0.2	0.2 U	0.5	0.2	1.0 U	1.0	0.07
Vinyl Chloride	0.53	0.1 U	0.2	0.1	0.2 U	0.2	0.06	0.1 U	0.2	0.1	0.1 U	0.2	0.1	0.1 U	0.2	0.1	0.2 U	0.2	0.06
m,p-Xylene	1300	0.1 U	0.5	0.1	0.4 U	0.4	0.05	0.1 U	0.5	0.1	0.1 U	0.5	0.1	0.1 U	0.5	0.1	0.4 U	0.4	0.05
o-Xylene	1600	0.1 U	0.5	0.1	0.2 U	0.2	0.04	0.1 U	0.5	0.1	0.1 U	0.5	0.1	0.1 U	0.5	0.1	0.2 U	0.2	0.04
2-Chloroethylvinylether	---	NA	NA	NA	1.0 U	1.0	0.25	NA	NA	NA	NA	NA	NA	NA	NA	NA	1.0 UJ	1.0	0.25
Bromoethane	---	NA	NA	NA	0.2 U	0.2	0.04	NA	NA	NA	NA	NA	NA	NA	NA	NA	0.2 U	0.2	0.04
VOLATILES (µg/L)																			
Method SW8260C-SIM																			
Tetrachloroethene	3.3	0.010 U	0.020	0.010	0.020 U	0.020	0.0036	0.010 U	0.020	0.010	0.010 U	0.020	0.010	0.010 U	0.020	0.010	0.020 U	0.020	0.0036
Vinyl Chloride	0.53	**0.011** J1	0.020	0.010	0.020 U	0.020	0.0022	0.010 U	0.020	0.010	0.010 U	0.020	0.010	0.010 U	0.020	0.010	0.020 U	0.020	0.0022
Acrylonitrile	0.057	NA	NA	NA	0.050 U	0.050	0.0158	NA	NA	NA	NA	NA	NA	NA	NA	NA	0.050 U	0.050	0.0158
SEMIVOLATILES (µg/L)																			
Method SW8270D																			
Acenaphthene	120	**0.2** J1	0.5	0.1	1.0 U	1.0	0.55	0.1 U	0.5	0.1	0.1 U	0.5	0.1	0.1 U	0.5	0.1	1.0 U	1.0	0.57
Acenaphthylene	---	0.1 U	0.5	0.1	1.0 U	1.0	0.48	0.1 U	0.5	0.1	0.1 U	0.5	0.1	0.1 U	0.5	0.1	1.0 U	1.0	0.51
Anthracene	200	0.1 U	0.5	0.1	1.0 U	1.0	0.53	0.1 U	0.5	0.1	0.1 U	0.5	0.1	0.1 U	0.5	0.1	1.0 U	1.0	0.56
Benzo(a)anthracene	0.0018	0.1 U	0.5	0.1	1.0 U	1.0	0.52	0.1 U	0.5	0.1	0.1 U	0.5	0.1	0.1 U	0.5	0.1	1.0 U	1.0	0.55
Benzo(a)pyrene	0.00018	0.1 U	0.5	0.1	1.0 U	1.0	0.48	0.1 U	0.5	0.1	0.1 U	0.5	0.1	0.1 U	0.5	0.1	1.0 U	1.0	0.51
Benzo(b)fluoranthene	0.0018	0.1 U	0.5	0.1	NA	NA	NA	0.1 U	0.5	0.1	0.1 U	0.5	0.1	0.1 U	0.5	0.1	NA	NA	NA
Benzo(g,h,i)perylene	---	0.1 U	0.5	0.1	1.0 U	1.0	0.55	0.1 U	0.5	0.1	0.1 U	0.5	0.1	0.1 U	0.5	0.1	1.0 U	1.0	0.57
Benzo(k)fluoranthene	0.0018	0.1 U	0.5	0.1	NA	NA	NA	0.1 U	0.5	0.1	0.1 U	0.5	0.1	0.1 U	0.5	0.1	NA	NA	NA
Total Benzofluoranthenes	0.0018	NA	NA	NA	1.0 U	1.0	0.48	NA	NA	NA	NA	NA	NA	NA	NA	NA	1.0 U	1.0	0.51
Benzoic Acid	2,240	6 UJ	14	6	10 U	10	5.1	6 U	15	6	6 U	14	6	6 UJ	15	6	10 U	10	5.4
Benzyl Alcohol	182	5 U	14	5	5.0 U	5.0	2.0	5 U	15	5	5 U	14	5	5 U	15	5	5.3 U	5.3	2.1
4-Bromophenyl-phenylether	---	0.5 U	1	0.5	1.0 U	1.0	0.42	0.5 U	1	0.5	0.5 U	1	0.5	0.5 U	1	0.5	1.0 U	1.0	0.45
Butylbenzylphthalate	0.41	2 U	5	2	1.0 U	1.0	0.56	2 U	5	2	2 U	5	2	2 U	5	2	1.0 U	1.0	0.59
Di-n-Butylphthalate	47	2 U	5	2	1.0 U	1.0	0.54	2 U	5	2	2 U	5	2	2 U	5	2	1.0 U	1.0	0.57
Carbazole	---	0.5 U	1	0.5	1.0 U	1.0	0.31	0.5 U	1	0.5	0.5 U	1	0.5	0.5 U	1	0.5	1.0 U	1.0	0.32
4-Chloro-3-methylphenol	3700	0.5 U	1	0.5	5.0 U	5.0	2.4	0.5 U	1	0.5	0.5 U	1	0.5	0.5 U	1	0.5	5.3 U	5.3	2.5
4-Chloroaniline	---	0.5 U	1	0.5	5.0 U	5.0	2.6	0.5 U	1	0.5	0.5 U	1	0.5	0.5 U	1	0.5	5.3 U	5.3	2.7
bis(2-Chloroethoxy) Methane	---	0.5 U	1	0.5	1.0 U	1.0	0.56	0.5 U	1	0.5	0.5 U	1	0.5	0.5 U	1	0.5	1.0 U	1.0	0.59
Bis-(2-Chloroethyl) Ether	---	0.5 U	1	0.5	1.0 U	1.0	0.58	0.5 U	1	0.5	0.5 U	1	0.5	0.5 U	1	0.5	1.0 U	1.0	0.61
2-Chloronaphthalene	---	0.4 U	1	0.4	1.0 U	1.0	0.48	0.4 U	1	0.4	0.4 U	1	0.4	0.4 U	1	0.4	1.0 U	1.0	0.50
2-Chlorophenol	---	0.5 U	1	0.5	1.0 U	1.0	0.53	0.5 U	1	0.5	0.5 U	1	0.5	0.5 U	1	0.5	1.0 U	1.0	0.56
4-Chlorophenyl-phenylether	---	0.5 U	1	0.5	1.0 U	1.0	0.45	0.5 U	1	0.5	0.5 U	1	0.5	0.5 U	1	0.5	1.0 U	1.0	0.47
2,2'-Oxybis(1-Chloropropane)	---	0.5 U	1	0.5	1.0 U	1.0	0.62	0.5 U	1	0.5	0.5 U	1	0.5	0.5 U	1	0.5	1.0 U	1.0	0.66
Chrysene	0.018	0.1 U	0.5	0.1	1.0 U	1.0	0.55	0.1 U	0.5	0.1	0.1 U	0.5	0.1	0.1 U	0.5	0.1	1.0 U	1.0	0.58
Dibenz(a,h)anthracene	0.0018	0.1 U	0.5	0.1	1.0 U	1.0	0.48	0.1 U	0.5	0.1	0.1 U	0.5	0.1	0.1 U	0.5	0.1	1.0 U	1.0	0.51
Dibenzofuran	1.3	0.5 U	1	0.5	1.0 U	1.0	0.48	0.5 U	1	0.5	0.5 U	1	0.5	0.5 U	1	0.5	1.0 U	1.0	0.50
1,2-Dichlorobenzene	440	0.5 U	1	0.5	1.0 U	1.0	0.36	0.5 U	1	0.5	0.5 U	1	0.5	0.5 U	1	0.5	1.0 U	1.0	0.38
1,3-Dichlorobenzene	---	0.5 U	1	0.5	1.0 U	1.0	0.36	0.5 U	1	0.5	0.5 U	1	0.5	0.5 U	1	0.5	1.0 U	1.0	0.38
1,4-Dichlorobenzene	1.7	0.5 U	1	0.5	1.0 U	1.0	0.40	0.5 U	1	0.5	0.5 U	1	0.5	0.5 U	1	0.5	1.0 U	1.0	0.42
3,3'-Dichlorobenzidine	---	2 U	5	2	5.0 U	5.0	1.5	2 U	5	2	2 U	5	2	2 U	5	2	5.3 U	5.3	1.6
2,4-Dichlorophenol	---	0.5 U	1	0.5	5.0 U	5.0	2.6	0.5 U	1	0.5	0.5 U	1	0.5	0.5 U	1	0.5	5.3 U	5.3	2.7
Diethylphthalate	4,236	2 U	5	2	1.0 U	1.0	0.58	2 U	5	2	2 U	5	2	2 U	5	2	1.0 U	1.0	0.61
2,4-Dimethylphenol	660	0.5 U	1	0.5	1.0 U	1.0	0.36	0.5 U	1	0.5	0.5 U	1	0.5	0.5 U	1	0.5	1.0 U	1.0	0.38
Dimethylphthalate	1,100,000	2 U	5	2	1.0 U	1.0	0.53	2 U	5	2	2 U	5	2	2 U	5	2	1.0 U	1.0	0.56
4,6-Dinitro-2-Methylphenol	---	5 U	14	5	10 U	10	3.1	5 U	15	5	5 U	14	5	5 U	15	5	10 U	10	3.3
2,4-Dinitrophenol	---	10 U	29	10	10 U	10	3.5	10 U	29	10	10 U	29	10	10 U	29	10	10 U	10	3.7
2,4-Dinitrotoluene	---	1 U	5	1	5.0 U	5.0	2.5	1 U	5	1	1 U	5	1	1 U	5	1	5.3 U	5.3	2.7
2,6-Dinitrotoluene	---	0.5 U	1	0.5	5.0 U	5.0	2.4	0.5 U	1	0.5	0.5 U	1	0.5	0.5 U	1	0.5	5.3 U	5.3	2.5
bis(2-Ethylhexyl)phthalate	1.2	2 U	5	2	1.0 U	1.0	1.9	2 U	5	2	2 U	5	2	2 U	5	2	1.5	1.0	2.0

TABLE L-1
GROUNDWATER ANALYTICAL RESULTS
BOEING ISAACSON-THOMPSON
REMEDIAL INVESTIGATION

Location:		IT-MW-10			IT-MW-11			IT-MW-11			IT-MW-11			IT-MW-11			IT-MW-12		
Laboratory Sample ID:	Preliminary	6789059/6789060/6789061/VJ53E			UA44C/UA44K/UA45C/UA45J/UB46C/UB46J			6582519/6582520/UM84A			6693947/6693948/6693949/UZ37B			6789047/6789048/6789049/VJ53A			UA86C/UA86G/UA87C/UA87F		
Laboratory Data Package ID:	Cleanup	1335688/VJ53			UA44/UA45/UB46			1296009/UM84			1317022/UZ37			1335688/VJ53			UA86/UA87		
Sample Date:	Levels	9/13/2012			12/07/2011			3/15/2012			6/19/2012			9/13/2012			12/12/2011		
		Result	Reporting Limit	Detection Limit	Result	Reporting Limit	Detection Limit	Result	Reporting Limit	Detection Limit	Result	Reporting Limit	Detection Limit	Result	Reporting Limit	Detection Limit	Result	Reporting Limit	Detection Limit
Fluoranthene	11	0.1 U	0.5	0.1	1.0 U	1.0	0.52	0.1 U	0.5	0.1	0.1 U	0.5	0.1	0.1 U	0.5	0.1	1.0 U	1.0	0.54
Fluorene	45	0.1 U	0.5	0.1	1.0 U	1.0	0.56	0.1 U	0.5	0.1	0.1 U	0.5	0.1	0.1 U	0.5	0.1	1.0 U	1.0	0.59
Hexachlorobenzene	---	0.1 U	0.5	0.1	1.0 U	1.0	0.47	0.1 U	0.5	0.1	0.1 U	0.5	0.1	0.1 U	0.5	0.1	1.0 U	1.0	0.49
Hexachlorobutadiene	---	0.5 U	1	0.5	1.0 U	1.0	0.31	0.5 U	1	0.5	0.5 U	1	0.5	0.5 U	1	0.5	1.0 U	1.0	0.32
Hexachlorocyclopentadiene	---	5 U	14	5	5.0 U	5.0	1.2	5 U	15	5	5 U	14	5	5 U	15	5	5.3 U	5.3	1.2
Hexachloroethane	---	1 U	5	1	1.0 U	1.0	0.35	1 U	5	1	1 U	5	1	1 U	5	1	1.0 U	1.0	0.37
Indeno(1,2,3-cd)pyrene	0.0018	0.1 U	0.5	0.1	1.0 U	1.0	0.48	0.1 U	0.5	0.1	0.1 U	0.5	0.1	0.1 U	0.5	0.1	1.0 U	1.0	0.51
Isophorone	---	0.5 U	1	0.5	1.0 U	1.0	0.48	0.5 U	1	0.5	0.5 U	1	0.5	0.5 U	1	0.5	1.0 U	1.0	0.51
1-Methylnaphthalene	2.3	0.1 U	0.5	0.1	1.0 U	1.0	0.48	0.1 U	0.5	0.1	0.1 U	0.5	0.1	0.1 U	0.5	0.1	1.0 U	1.0	0.50
2-Methylnaphthalene	64	0.1 U	0.5	0.1	1.0 U	1.0	0.48	0.1 U	0.5	0.1	0.1 U	0.5	0.1	0.1 U	0.5	0.1	1.0 U	1.0	0.50
2-Methylphenol	3100	0.5 U	1	0.5	1.0 U	1.0	0.53	0.5 U	1	0.5	0.5 U	1	0.5	0.5 U	1	0.5	1.0 U	1.0	0.56
4-Methylphenol	330	**44**	1	0.5	**0.5** J1	1.0	0.52	0.5 U	1	0.5	0.5 U	1	0.5	0.5 U	1	0.5	1.0 U	1.0	0.55
Naphthalene	26	**0.1** J1	0.5	0.1	1.0 U	1.0	0.52	0.1 U	0.5	0.1	**0.1** J1	0.5	0.1	0.1 U	0.5	0.1	1.0 U	1.0	0.55
2-Nitroaniline	---	0.5 U	1	0.5	5.0 U	5.0	2.6	0.5 U	1	0.5	0.5 U	1	0.5	0.5 U	1	0.5	5.3 U	5.3	2.8
3-Nitroaniline	---	0.5 U	1	0.5	5.0 U	5.0	2.3	0.5 U	1	0.5	0.5 U	1	0.5	0.5 U	1	0.5	5.3 U	5.3	2.4
4-Nitroaniline	---	0.5 U	1	0.5	5.0 U	5.0	2.2	0.5 U	1	0.5	0.5 U	1	0.5	0.5 U	1	0.5	5.3 U	5.3	2.4
Nitrobenzene	---	0.5 U	1	0.5	1.0 U	1.0	0.58	0.5 U	1	0.5	0.5 U	1	0.5	0.5 U	1	0.5	1.0 U	1.0	0.61
2-Nitrophenol	---	0.5 U	1	0.5	5.0 U	5.0	2.0	0.5 U	1	0.5	0.5 U	1	0.5	0.5 U	1	0.5	5.3 U	5.3	2.1
4-Nitrophenol	---	10 U	29	10	5 U	5.0	2.6	10 U	29	10	10 U	29	10	10 U	29	10	5.3 U	5.3	2.7
N-Nitroso-Di-N-Propylamine	---	0.5 U	1	0.5	1.0 U	1.0	0.56	0.5 U	1	0.5	0.5 U	1	0.5	0.5 U	1	0.5	1.0 U	1.0	0.59
N-Nitrosodiphenylamine	1.96	0.5 U	1	0.5	1.0 U	1.0	0.46	0.5 U	1	0.5	0.5 U	1	0.5	0.5 U	1	0.5	1.0 U	1.0	0.48
Di-n-Octyl phthalate	---	2 U	5	2	1.0 U	1.0	0.51	2 U	5	2	2 U	5	2	2 U	5	2	1.0 U	1.0	0.53
Pentachlorophenol	---	1 UJ	5	1	5.0 U	5.0	2.4	1 U	5	1	1 U	5	1	1 UJ	5	1	5.3 U	5.3	2.5
Phenanthrene	---	0.1 U	0.5	0.1	1.0 U	1.0	0.56	0.1 U	0.5	0.1	0.1 U	0.5	0.1	0.1 U	0.5	0.1	1.0 U	1.0	0.59
Phenol	41,000	0.5 U	1	0.5	1.0 U	1.0	0.52	0.5 U	1	0.5	0.5 U	1	0.5	0.5 U	1	0.5	1.0 U	1.0	0.55
Pyrene	9.8	0.1 U	0.5	0.1	1.0 U	1.0	0.55	0.1 U	0.5	0.1	0.1 U	0.5	0.1	0.1 U	0.5	0.1	1.0 U	1.0	0.58
1,2,4-Trichlorobenzene	1.13	0.5 U	1	0.5	1.0 U	1.0	0.38	0.5 U	1	0.5	0.5 U	1	0.5	0.5 U	1	0.5	1.0 U	1.0	0.40
2,4,5-Trichlorophenol	---	0.5 U	1	0.5	5.0 U	5.0	2.2	0.5 U	1	0.5	0.5 U	1	0.5	0.5 U	1	0.5	5.3 U	5.3	2.3
2,4,6-Trichlorophenol	---	0.5 U	1	0.5	5.0 U	5.0	2.4	0.5 U	1	0.5	0.5 U	1	0.5	0.5 U	1	0.5	5.3 U	5.3	2.5
cPAHs (µg/L)																			
Method SW8270D-SIM																			
Benzo(a)anthracene	0.0018	**0.0050** J1	0.0096	0.0048	0.011 U	0.011	0.0069	0.0049 U	0.0098	0.0049	0.0048 UJ	0.0095	0.0048	0.0049 U	0.0098	0.0049	0.010 U	0.010	0.0063
Benzo(a)pyrene	0.00018	0.0048 U	0.0096	0.0048	0.011 U	0.011	0.0052	0.0049 U	0.0098	0.0049	0.0048 UJ	0.0095	0.0048	0.0049 U	0.0098	0.0049	0.010 U	0.010	0.0048
Benzo(b)fluoranthene	0.0018	0.0048 U	0.0096	0.0048	NA	NA	NA	0.0049 U	0.0098	0.0049	0.0048 UJ	0.0095	0.0048	0.0049 U	0.0098	0.0049	NA	NA	NA
Benzo(k)fluoranthene	0.0018	0.0048 U	0.0096	0.0048	NA	NA	NA	0.0049 U	0.0098	0.0049	0.0048 UJ	0.0095	0.0048	0.0049 U	0.0098	0.0049	NA	NA	NA
Total Benzofluoranthenes	0.0018	NA	NA	NA	0.022 UJ	0.022	0.011	NA	NA	NA	NA	NA	NA	NA	NA	NA	0.020 U	0.020	0.0099
Chrysene	0.018	0.0048 U	0.0096	0.0048	0.011 U	0.011	0.0050	0.0049 U	0.0098	0.0049	0.0048 UJ	0.0095	0.0048	0.0049 U	0.0098	0.0049	0.010 U	0.010	0.0046
Dibenz(a,h)anthracene	0.0018	0.0038 U	0.0096	0.0038	0.011 U	0.011	0.0053	0.0039 U	0.0098	0.0039	0.0038 UJ	0.0095	0.0038	0.0039 U	0.0098	0.0039	0.010 U	0.010	0.0048
Indeno(1,2,3-cd)pyrene	0.0018	0.0038 U	0.0096	0.0038	0.011 U	0.011	0.0051	0.0039 U	0.0098	0.0039	0.0038 UJ	0.0095	0.0038	0.0039 U	0.0098	0.0039	0.010 U	0.010	0.0046
Pyrene	9.8	0.0096 U	0.048	0.0096	NA	NA	NA	0.0098 U	0.049	0.0098	0.010 UJ	0.048	0.010	0.0098 U	0.049	0.0098	NA	NA	NA
cPAH TEQ	0.00018	**0.0005** J	NA	NA	ND	NA	NA	ND	NA	NA	ND	NA	NA	ND	NA	NA	ND	NA	NA
PCBs (µg/L)																			
Method SW8082																			
Aroclor 1016	0.000023	0.0057 U	0.0095	0.0057	0.010 U	0.010	0.0025	0.0058 U	0.0096	0.0058	0.0058 U	0.0096	0.0058	0.0058 U	0.0097	0.0058	0.010 U	0.010	0.0025
Aroclor 1221	---	0.0057 U	0.0095	0.0057	0.010 U	0.010	0.0028	0.0058 U	0.0096	0.0058	0.0058 U	0.0096	0.0058	0.0058 U	0.0097	0.0058	0.010 U	0.010	0.0028
Aroclor 1232	---	0.0066 U	0.0095	0.0066	0.010 U	0.010	0.0028	0.0067 U	0.0096	0.0067	0.0067 U	0.0096	0.0067	0.0068 U	0.0097	0.0068	0.010 U	0.010	0.0028
Aroclor 1242	0.000023	0.0057 U	0.0095	0.0057	0.010 U	0.010	0.0028	0.0058 U	0.0096	0.0058	0.0058 U	0.0096	0.0058	0.0058 U	0.0097	0.0058	0.010 U	0.010	0.0028
Aroclor 1248	0.000023	0.0047 U	0.0095	0.0047	0.010 U	0.010	0.0028	0.0048 U	0.0096	0.0048	0.0048 U	0.0096	0.0048	0.0049 U	0.0097	0.0049	0.010 U	0.010	0.0028
Aroclor 1254	0.0000055	0.0047 U	0.0095	0.0047	0.010 U	0.010	0.0028	0.0048 U	0.0096	0.0048	0.0048 U	0.0096	0.0048	0.0049 U	0.0097	0.0049	**0.0080** J1	0.010	0.0028
Aroclor 1260	0.000023	**0.0060** J1	0.0095	0.0047	0.010 U	0.010	0.0028	0.0048 U	0.0096	0.0048	0.0048 U	0.0096	0.0048	0.0049 U	0.0097	0.0049	0.010 U	0.010	0.0028
Total PCBs	0.000023	**0.0060** J	NA	NA	ND	NA	NA	ND	NA	NA	ND	NA	NA	ND	NA	NA	**0.0080** J	NA	NA

TABLE L-1
GROUNDWATER ANALYTICAL RESULTS
BOEING ISAACSON-THOMPSON
REMEDIAL INVESTIGATION

Location:		IT-MW-10			IT-MW-11			IT-MW-11			IT-MW-11			IT-MW-11			IT-MW-12		
Laboratory Sample ID:	Preliminary	6789059/6789060/6789061/VJ53E			UA44C/UA44K/UA45C/UA45J/UB46C/UB46J			6582519/6582520/UM84A			6693947/6693948/6693949/UZ37B			6789047/6789048/6789049/VJ53A			UA86C/UA86G/UA87C/UA87F		
Laboratory Data Package ID:	Cleanup	1335688/VJ53			UA44/UA45/UB46			1296009/UM84			1317022/UZ37			1335688/VJ53			UA86/UA87		
Sample Date:	Levels	9/13/2012			12/07/2011			3/15/2012			6/19/2012			9/13/2012			12/12/2011		
		Result	Reporting Limit	Detection Limit	Result	Reporting Limit	Detection Limit	Result	Reporting Limit	Detection Limit	Result	Reporting Limit	Detection Limit	Result	Reporting Limit	Detection Limit	Result	Reporting Limit	Detection Limit
TOTAL PETROLEUM HYDROCARBONS (mg/L)																			
NWTPH-Dx																			
Diesel-Range Organics	0.5	0.031 U	0.100	0.031	0.10 U	0.10	0.022	0.070 U	0.25	0.070	0.029 U	0.096	0.029	0.029 U	0.096	0.029	0.10 U	0.10	0.022
Oil-Range Organics	0.5	0.073 U	0.260	0.073	0.20 U	0.20	0.044	1.0 U	3.0	1.0	0.067 U	0.240	0.067	0.067 U	0.240	0.067	0.20 U	0.20	0.044
NWTPH-G																			
Gasoline-Range Organics	1.0/0.8	0.05 U	0.25	0.05	0.25 U	0.25	0.06	0.05 U	0.25	0.05	0.05 U	0.25	0.05	0.05 U	0.25	0.05	0.25 U	0.25	0.06
TOTAL METALS (µg/L)																			
Method 200.8																			
Antimony	---	0.33 U	1.0	0.33	0.2 U	0.2	0.010	0.42 U	1.0	0.42	0.33 U	1.0	0.33	0.33 U	1.0	0.33	0.2 U	0.2	0.01
Arsenic	---	**272**	2.0	0.40	**7.6**	0.2	0.048	**7.2**	2.0	0.95	**2.0**	2.0	0.20	**2.4**	2.0	0.20	**66.1**	0.5	0.048
Barium	---	**23.5**	2.0	0.41	**8.0**	0.5	0.020	**5.0**	2.0	0.69	**4.3**	2.0	0.41	**3.6**	2.0	0.41	**169**	0.5	0.02
Beryllium	---	0.025 U	0.50	0.025	0.2 U	0.2	0.021	0.13 U	0.50	0.13	0.025 U	0.50	0.025	0.025 U	0.50	0.025	0.2 U	0.2	0.021
Cadmium	---	0.082 U	0.50	0.082	0.1 U	0.1	0.010	0.20 U	0.50	0.20	0.048 U	0.50	0.048	0.082 U	0.50	0.082	0.1 U	0.1	0.01
Chromium	---	**2.5**	2.0	0.50	0.5 U	0.5	0.045	0.60 U	2.0	0.60	0.50 U	2.0	0.50	0.50 U	2.0	0.50	**0.8**	0.5	0.045
Copper	---	**0.78** J1	2.0	0.40	**0.6**	0.5	0.158	0.38 U	2.0	0.38	0.39 UJ2	2.0	0.15	0.40 U	2.0	0.40	**1.2**	0.5	0.158
Lead	---	**0.18** J1	1.0	0.034	**0.2**	0.1	0.046	**0.12** J1	1.0	0.080	0.034 U	1.0	0.034	**0.14** J1	1.0	0.034	**0.3**	0.1	0.046
Nickel	---	**1.5** J1	2.0	0.35	**0.7**	0.5	0.079	0.50 U	2.0	0.50	**0.20** J1	2.0	0.13	0.35 U	2.0	0.35	**2.9** J	0.5	0.079
Selenium	---	0.50 U	2.0	0.50	0.5 U	0.5	0.127	0.27 U	2.0	0.27	0.18 U	2.0	0.18	0.50 U	2.0	0.50	**2**	2	0.13
Silver	---	0.10 U	0.50	0.10	0.2 U	0.2	0.008	0.098 U	0.50	0.098	0.10 U	0.50	0.10	0.10 U	0.50	0.10	0.2 U	0.2	0.008
Thallium	---	0.15 U	0.50	0.15	0.2 U	0.2	0.004	0.15 U	0.50	0.15	0.029 U	0.50	0.029	0.15 U	0.50	0.15	0.2 U	0.2	0.004
Zinc	---	**1.7** J1	15.0	1.1	4 U	4	0.50	**5.5** J1	15.0	4.0	**1.5** J1	15.0	1.1	**2.1** J1	15.0	1.1	4 U	4	0.50
Method SW7196A (mg/L)																			
Chromium VI	0.00058	0.010 U	0.010	0.00300	0.010 U	0.010	0.00300	0.010 U	0.010	0.00300	0.010 U	0.010	0.00300	0.010 UJ	0.010	0.00300	0.010 U	0.010	0.00300
Method SW7470A/EPA 1631E (ng/L)																			
Mercury	12	**3.12** J1	5.00	1.60	20.0 U	20.0	2.60	**0.833**	5.00	1.60	1.60 U	5.00	1.60	**0.704**	0.500	0.160	20.0 U	20.0	2.60
DISSOLVED METALS (µg/L)																			
Methods 200.8/SW7196A																			
Antimony	150	0.33 U	1.0	0.33	0.2 U	0.2	0.010	0.42 U	1.0	0.42	0.33 U	1.0	0.33	0.33 U	1.0	0.33	0.2 U	0.2	0.010
Arsenic	8	**226**	2.0	0.40	**9.4**	0.5	0.120	**7.7**	2.0	0.95	**2.1**	2.0	0.20	**2.2**	2.0	0.40	**65.8**	0.5	0.048
Barium	770	**19.5**	2.0	0.41	**7.9**	0.5	0.020	**5.3**	2.0	0.69	**5.3**	2.0	0.41	**3.9**	2.0	0.41	**171**	0.5	0.020
Beryllium	12	0.025 U	0.50	0.025	0.2 U	0.2	0.021	0.13 U	0.50	0.13	0.025 U	0.50	0.025	0.025 U	0.50	0.025	0.2 U	0.2	0.021
Cadmium	0.25	0.082 U	0.50	0.082	0.1 U	0.1	0.010	0.20 U	0.50	0.20	0.048 U	0.50	0.048	0.082 U	0.50	0.082	0.1 U	0.1	0.010
Chromium	74	**2.0** J1	2.0	0.50	1 U	1	0.11	0.60 U	2.0	0.60	0.50 U	2.0	0.50	0.50 U	2.0	0.50	0.5 U	0.5	0.045
Copper	8	0.40 U	2.0	0.40	0.5 U	0.5	0.158	0.38 U	2.0	0.38	0.46 UJ2	2.0	0.15	0.40 U	2.0	0.40	**0.6**	0.5	0.158
Lead	2.5	0.034 U	1.0	0.034	0.1 U	0.1	0.046	0.080 U	1.0	0.080	**0.25** J1	1.0	0.034	0.034 U	1.0	0.034	0.1 U	0.1	0.046
Nickel	8.2	**1.2** J1	2.0	0.35	0.5 U	0.5	0.079	0.50 U	2.0	0.50	**0.41** J1	2.0	0.13	0.35 U	2.0	0.35	**2.4**	0.5	0.079
Selenium	5	0.50 U	2.0	0.50	0.5 U	0.5	0.127	0.27 U	2.0	0.27	0.18 U	2.0	0.18	0.50 U	2.0	0.50	**2**	2	0.13
Silver	22	0.10 U	0.50	0.10	0.2 U	0.2	0.008	0.098 U	0.50	0.098	0.10 U	0.50	0.10	0.10 U	0.50	0.10	0.2 U	0.2	0.008
Thallium	0.47	0.15 U	0.50	0.15	0.2 U	0.2	0.004	0.15 U	0.50	0.15	0.029 U	0.50	0.029	0.15 U	0.50	0.15	0.2 U	0.2	0.004
Zinc	56	**2.4** J1	15.0	1.1	4 U	4	0.50	4.0 U	15.0	4.0	**2.4** J1	15.0	1.1	1.1 U	15.0	1.1	4 U	4	0.50
Method SW7470A/EPA 1631E (ng/L)																			
Mercury	12	**3.24** J1	10.0	3.20	20.0 U	20.0	2.60	1.60 U	5.00	1.60	**1.53**	0.500	0.160	**2.11** J1	5.00	1.60	20.0 U	20.0	2.60
CONVENTIONALS (mg/L)																			
Chloride (Method 300.0)	---	**5.5**	2.0	1.0	NA	NA	NA	NA	NA	NA	**3.9**	2.0	1.0	**3.3**	0.40	0.20	NA	NA	NA
Nitrate (Method 300.0)	---	0.050 U	0.10	0.050	**0.1**	0.1	0.007	0.050 U	0.10	0.050	0.25 U	0.10	0.050	0.050 U	0.10	0.050	0.1 U	0.1	0.007
Sulfate (Method 300.0)	---	0.30 U	1.0	0.30	**5.1**	0.2	0.118	**3.2**	1.0	0.30	**2.8**	1.0	0.30	**2.0**	1.0	0.30	**106**	5.0	2.95
Total Dissolved Solids (Method 160.1)	---	**165**	30.0	9.7	**196**	5.0	5.00	**189**	30.0	9.7	**175** J	30.0	9.7	**160**	30.0	9.7	**1700**	20.0	20.0
FIELD PARAMETERS																			
Temperature (°C)	---	15.77	NA	NA	14.47	NA	NA	11.61	NA	NA	13.16	NA	NA	16.17	NA	NA	15.61	NA	NA
Conductivity (uS/cm)	---	4555	NA	NA	840	NA	NA	229	NA	NA	196	NA	NA	3250	NA	NA	6232	NA	NA
Dissolved Oxygen (mg/L)	---	1.85	NA	NA	1.44	NA	NA	0.63	NA	NA	0.33	NA	NA	1.17	NA	NA	0.98	NA	NA
pH (SU)	---	6.45	NA	NA	5.95	NA	NA	6.49	NA	NA	6.68	NA	NA	6.57	NA	NA	7.05	NA	NA
ORP (mV)	---	-113	NA	NA	-27.4	NA	NA	-143.0	NA	NA	-5.5	NA	NA	-61	NA	NA	-99.9	NA	NA
Turbidity (NTU)	---	20.4	NA	NA	5.07	NA	NA	3.09	NA	NA	4.92	NA	NA	5.25	NA	NA	13.89	NA	NA
Ferrous Iron (mg/L)	---	3.0	NA	NA	NA	NA	NA	1.4	NA	NA	1.6	NA	NA	3.2	NA	NA	NA	NA	NA

TABLE L-1
GROUNDWATER ANALYTICAL RESULTS
BOEING ISAACSON-THOMPSON
REMEDIAL INVESTIGATION

Location:		IT-DUP-2 (IT-MW-12)			IT-MW-12			IT-MW-12			IT-MW-12			IT-MW-13			IT-MW-13		
Laboratory Sample ID:	Preliminary	UA86A/UA86E/UA87A/UA87D			6571479/6571480/UL18H			6690486/6690487/6690488/UZ00F			6788051/6788052/6788053/VJ32K			UB08D/UB08I/UB09D/UB09I			6571481/6571482/UL18I		
Laboratory Data Package ID:	Cleanup	UA86/UA87			1293989/UL18			1316296/UZ00			1335483/VJ32			UB08/UB09			1293989/UL18		
Sample Date:	Levels	12/12/2011			03/07/2012			6/15/2012			9/12/2012			12/13/2011			03/07/2012		
		Result	Reporting Limit	Detection Limit	Result	Reporting Limit	Detection Limit	Result	Reporting Limit	Detection Limit	Result	Reporting Limit	Detection Limit	Result	Reporting Limit	Detection Limit	Result	Reporting Limit	Detection Limit
VOLATILES (µg/L)																			
Method SW8260C																			
Acetone	110,000	5.0 U	5.0	2.1	3.0 U	5.0	3.0	3.0 U	5.0	3.0	3.0 U	5.0	3.0	5.0 U	5.0	2.1	3.0 U	5.0	3.0
Acrolein	---	5.0 U	5.0	2.5	5.0 U	25	5.0	5.0 U	25	5.0	5.0 U	25	5.0	5.0 U	5.0	2.5	5.0 U	25	5.0
Acrylonitrile	0.057	1.0 U	1.0	0.60	1.0 U	5.0	1.0	1.0 U	5.0	1.0	1.0 U	5.0	1.0	1.0 U	1.0	0.60	1.0 U	5.0	1.0
Benzene	2	0.2 U	0.2	0.03	0.1 U	0.2	0.1	0.1 U	0.2	0.1	0.1 U	0.2	0.1	0.2 U	0.2	0.03	0.1 U	0.2	0.1
Bromobenzene	---	0.2 U	0.2	0.06	0.1 U	0.5	0.1	0.1 U	0.5	0.1	0.1 U	0.5	0.1	0.2 U	0.2	0.06	0.1 U	0.5	0.1
Bromochloromethane	---	0.2 U	0.2	0.06	0.1 U	0.5	0.1	0.1 U	0.5	0.1	0.1 U	0.5	0.1	0.2 U	0.2	0.06	0.1 U	0.5	0.1
Bromodichloromethane	17	0.2 U	0.2	0.05	0.1 U	0.5	0.1	0.1 U	0.5	0.1	0.1 U	0.5	0.1	0.2 U	0.2	0.05	0.1 U	0.5	0.1
Bromoform	---	0.2 UJ	0.2	0.06	0.1 U	0.5	0.1	0.1 U	0.5	0.1	0.1 U	0.5	0.1	0.2 UJ	0.2	0.06	0.1 U	0.5	0.1
Bromomethane	---	1.0 U	1.0	0.25	0.1 U	0.5	0.1	0.1 U	0.5	0.1	0.1 U	0.5	0.1	1.0 U	1.0	0.25	0.1 U	0.5	0.1
2-Butanone	73,000	5.0 U	5.0	0.81	1.0 U	5.0	1.0	1.0 U	5.0	1.0	1.0 U	5.0	1.0	5.0 U	5.0	0.81	1.0 U	5.0	1.0
n-Butylbenzene	780	0.2 U	0.2	0.02	0.1 U	0.5	0.1	0.1 U	0.5	0.1	0.1 U	0.5	0.1	0.2 U	0.2	0.02	0.1 U	0.5	0.1
sec-Butylbenzene	---	0.2 U	0.2	0.02	0.1 U	0.5	0.1	0.1 U	0.5	0.1	0.1 U	0.5	0.1	0.2 U	0.2	0.02	0.1 U	0.5	0.1
tert-Butylbenzene	---	0.2 U	0.2	0.03	0.1 U	0.5	0.1	0.1 U	0.5	0.1	0.1 U	0.5	0.1	0.2 U	0.2	0.03	0.1 U	0.5	0.1
Carbon Disulfide	3900	0.2 U	0.2	0.04	0.4 U	0.5	0.4	0.4 U	0.5	0.4	0.4 U	0.5	0.4	0.2 U	0.2	0.04	0.4 U	0.5	0.4
Carbon Tetrachloride	0.46	0.2 U	0.2	0.04	0.1 U	0.2	0.1	0.1 U	0.2	0.1	0.1 U	0.2	0.1	0.2 U	0.2	0.04	0.1 U	0.2	0.1
Chlorobenzene	270	0.2 U	0.2	0.02	0.1 U	0.5	0.1	0.1 U	0.5	0.1	0.1 U	0.5	0.1	0.2 U	0.2	0.02	0.1 U	0.5	0.1
Chloroethane	21,000	0.2 U	0.2	0.09	0.1 U	0.5	0.1	0.1 U	0.5	0.1	0.1 U	0.5	0.1	0.2 U	0.2	0.09	0.1 U	0.5	0.1
Chloroform	9.4	0.2 U	0.2	0.03	0.1 U	0.2	0.1	0.1 U	0.2	0.1	0.1 U	0.2	0.1	0.2 U	0.2	0.03	0.1 U	0.2	0.1
Chloromethane	10.3	0.5 U	0.5	0.10	0.2 U	0.5	0.2	0.2 U	0.5	0.2	0.2 U	0.5	0.2	0.5 U	0.5	0.10	0.2 U	0.5	0.2
2-Chlorotoluene	---	0.2 U	0.2	0.02	0.1 U	0.5	0.1	0.1 U	0.5	0.1	0.1 U	0.5	0.1	0.2 U	0.2	0.02	0.1 U	0.5	0.1
4-Chlorotoluene	2600	0.2 U	0.2	0.02	0.1 U	0.5	0.1	0.1 U	0.5	0.1	0.1 U	0.5	0.1	0.2 U	0.2	0.02	0.1 U	0.5	0.1
1,2-Dibromo-3-chloropropane	---	0.5 U	0.5	0.04	0.2 U	0.5	0.2	0.2 U	0.5	0.2	0.2 U	0.5	0.2	0.5 U	0.5	0.04	0.2 U	0.5	0.2
Dibromochloromethane	---	0.2 U	0.2	0.05	0.1 U	0.5	0.1	0.1 U	0.5	0.1	0.1 U	0.5	0.1	0.2 U	0.2	0.05	0.1 U	0.5	0.1
Dibromomethane	---	0.2 U	0.2	0.14	0.1 U	0.5	0.1	0.1 U	0.5	0.1	0.1 U	0.5	0.1	0.2 U	0.2	0.14	0.1 U	0.5	0.1
trans-1,4-Dichloro-2-butene	---	1.0 UJ	1.0	0.32	1.0 U	5.0	1.0	1.0 U	5.0	1.0	1.0 U	5.0	1.0	1.0 U	1.0	0.32	1.0 U	5.0	1.0
1,2-Dichlorobenzene	440	0.2 U	0.2	0.04	0.1 U	0.5	0.1	0.1 U	0.5	0.1	0.1 U	0.5	0.1	0.2 U	0.2	0.04	0.1 U	0.5	0.1
1,3-Dichlorobenzene	960	0.2 U	0.2	0.04	0.1 U	0.5	0.1	0.1 U	0.5	0.1	0.1 U	0.5	0.1	0.2 U	0.2	0.04	0.1 U	0.5	0.1
1,4-Dichlorobenzene	1.7	0.2 U	0.2	0.04	0.1 U	0.5	0.1	0.1 U	0.5	0.1	0.1 U	0.5	0.1	0.2 U	0.2	0.04	0.1 U	0.5	0.1
1,1-Dichloroethane	33	0.2 U	0.2	0.05	0.1 U	0.5	0.1	0.1 U	0.5	0.1	0.1 U	0.5	0.1	0.2 U	0.2	0.05	0.1 U	0.5	0.1
1,2-Dichloroethane	3.6	0.2 U	0.2	0.07	0.1 U	0.2	0.1	0.1 U	0.2	0.1	0.1 U	0.2	0.1	0.2 U	0.2	0.07	0.1 U	0.2	0.1
1,1-Dichloroethene	3.2	0.2 U	0.2	0.05	0.1 U	0.2	0.1	0.1 U	0.2	0.1	0.1 U	0.2	0.1	0.2 U	0.2	0.05	0.1 U	0.2	0.1
cis-1,2-Dichloroethene	130	0.2 U	0.2	0.04	0.1 U	0.2	0.1	0.1 U	0.2	0.1	0.1 U	0.2	0.1	0.2 U	0.2	0.04	0.1 U	0.2	0.1
trans-1,2-Dichloroethene	940	0.2 U	0.2	0.05	0.1 U	0.2	0.1	0.1 U	0.2	0.1	0.1 U	0.2	0.1	0.2 U	0.2	0.05	0.1 U	0.2	0.1
1,2-Dichloropropane	3.7	0.2 U	0.2	0.04	0.1 U	0.5	0.1	0.1 U	0.5	0.1	0.1 U	0.5	0.1	0.2 U	0.2	0.04	0.1 U	0.5	0.1
1,3-Dichloropropane	---	0.2 U	0.2	0.06	0.1 U	0.5	0.1	0.1 U	0.5	0.1	0.1 U	0.5	0.1	0.2 U	0.2	0.06	0.1 U	0.5	0.1
2,2-Dichloropropane	---	0.2 U	0.2	0.05	0.1 U	0.5	0.1	0.1 U	0.5	0.1	0.1 U	0.5	0.1	0.2 U	0.2	0.05	0.1 U	0.5	0.1
1,1-Dichloropropene	---	0.2 U	0.2	0.03	0.1 U	0.5	0.1	0.1 U	0.5	0.1	0.1 U	0.5	0.1	0.2 U	0.2	0.03	0.1 U	0.5	0.1
cis-1,3-Dichloropropene	---	0.2 U	0.2	0.06	0.1 U	0.2	0.1	0.1 U	0.2	0.1	0.1 U	0.2	0.1	0.2 U	0.2	0.06	0.1 U	0.2	0.1
trans-1,3-Dichloropropene	---	0.2 U	0.2	0.08	0.1 U	0.2	0.1	0.1 U	0.2	0.1	0.1 U	0.2	0.1	0.2 U	0.2	0.08	0.1 U	0.2	0.1
Ethylbenzene	1.7	0.2 U	0.2	0.04	0.1 U	0.5	0.1	0.1 U	0.5	0.1	0.1 U	0.5	0.1	0.2 U	0.2	0.04	0.1 U	0.5	0.1
Ethylene Dibromide	---	0.2 U	0.2	0.08	0.1 U	0.5	0.1	0.1 U	0.5	0.1	0.1 U	0.5	0.1	0.2 U	0.2	0.08	0.1 U	0.5	0.1
Hexachlorobutadiene	---	0.5 U	0.5	0.07	0.1 U	0.5	0.1	0.1 U	0.5	0.1	0.1 U	0.5	0.1	0.5 U	0.5	0.07	0.1 U	0.5	0.1
2-Hexanone	3200	5.0 U	5.0	0.90	1.0 U	5.0	1.0	1.0 U	5.0	1.0	1.0 U	5.0	1.0	5.0 U	5.0	0.90	1.0 U	5.0	1.0
Isopropylbenzene	270	0.2 U	0.2	0.02	0.1 U	0.5	0.1	0.1 U	0.5	0.1	0.1 U	0.5	0.1	0.2 U	0.2	0.02	0.1 U	0.5	0.1
4-Isopropyltoluene	---	0.2 U	0.2	0.03	0.1 U	0.5	0.1	0.1 U	0.5	0.1	0.1 U	0.5	0.1	0.2 U	0.2	0.03	0.1 U	0.5	0.1
Methyl Iodide	---	1.0 U	1.0	0.23	0.1 U	0.5	0.1	0.1 UJ	0.5	0.1	0.1 U	0.5	0.1	1.0 U	1.0	0.23	0.1 U	0.5	0.1
4-Methyl-2-Pentanone (MIBK)	19,000	5.0 U	5.0	0.97	1.0 U	5.0	1.0	1.0 U	5.0	1.0	1.0 U	5.0	1.0	5.0 U	5.0	0.97	1.0 U	5.0	1.0
Methylene Chloride	230	0.5 U	0.5	0.48	0.2 U	0.5	0.2	0.2 U	0.5	0.2	0.2 U	0.5	0.2	0.5 U	0.5	0.48	0.2 U	0.5	0.2
Naphthalene	26	0.5 U	0.5	0.12	0.1 U	0.5	0.1	0.1 U	0.5	0.1	0.1 U	0.5	0.1	0.5 U	0.5	0.12	0.1 U	0.5	0.1
n-Propylbenzene	530	0.2 U	0.2	0.02	0.1 U	0.5	0.1	0.1 U	0.5	0.1	0.1 U	0.5	0.1	0.2 U	0.2	0.02	0.1 U	0.5	0.1
Styrene	77,000	0.2 U	0.2	0.04	0.1 U	0.5	0.1	0.1 U	0.5	0.1	0.1 U	0.5	0.1	0.2 U	0.2	0.04	0.1 U	0.5	0.1
1,1,1,2-Tetrachloroethane	---	0.2 U	0.2	0.04	0.1 U	0.5	0.1	0.1 U	0.5	0.1	0.1 U	0.5	0.1	0.2 U	0.2	0.04	0.1 U	0.5	0.1
1,1,2,2-Tetrachloroethane	0.33	0.2 U	0.2	0.06	0.1 U	0.2	0.1	0.1 U	0.2	0.1	0.1 U	0.2	0.1	0.2 U	0.2	0.06	0.1 U	0.2	0.1
Tetrachloroethene	3.3	0.2 U	0.2	0.05	0.1 U	0.2	0.1	0.1 U	0.2	0.1	0.1 U	0.2	0.1	0.2 U	0.2	0.05	0.1 U	0.2	0.1
Toluene	1300	0.2 U	0.2	0.04	0.1 U	0.2	0.1	0.1 U	0.2	0.1	0.1 U	0.2	0.1	0.2 U	0.2	0.04	0.1 U	0.2	0.1
1,1,2-Trichloro-1,2,2-trifuoroethane	59,000	0.2 U	0.2	0.04	0.2 U	0.5	0.2	0.2 U	0.5	0.2	0.2 U	0.5	0.2	0.2 U	0.2	0.04	0.2 U	0.5	0.2
1,2,3-Trichlorobenzene	---	0.5 U	0.5	0.11	0.1 U	0.5	0.1	0.1 U	0.5	0.1	0.1 U	0.5	0.1	0.5 U	0.5	0.11	0.1 U	0.5	0.1

TABLE L-1
GROUNDWATER ANALYTICAL RESULTS
BOEING ISAACSON-THOMPSON
REMEDIAL INVESTIGATION

Location:		IT-DUP-2 (IT-MW-12)			IT-MW-12			IT-MW-12			IT-MW-12			IT-MW-13			IT-MW-13		
Laboratory Sample ID:	Preliminary	UA86A/UA86E/UA87A/UA87D			6571479/6571480/UL18H			6690486/6690487/6690488/UZ00F			6788051/6788052/6788053/VJ32K			UB08D/UB08I/UB09D/UB09I			6571481/6571482/UL18I		
Laboratory Data Package ID:	Cleanup	UA86/UA87			1293989/UL18			1316296/UZ00			1335483/VJ32			UB08/UB09			1293989/UL18		
Sample Date:	Levels	12/12/2011			03/07/2012			6/15/2012			9/12/2012			12/13/2011			03/07/2012		
		Result	Reporting Limit	Detection Limit	Result	Reporting Limit	Detection Limit	Result	Reporting Limit	Detection Limit	Result	Reporting Limit	Detection Limit	Result	Reporting Limit	Detection Limit	Result	Reporting Limit	Detection Limit
1,2,4-Trichlorobenzene	1.13	0.5 U	0.5	0.11	0.1 U	0.5	0.1	0.1 U	0.5	0.1	0.1 U	0.5	0.1	0.5 U	0.5	0.11	0.1 U	0.5	0.1
1,1,1-Trichloroethane	46,000	0.2 U	0.2	0.04	0.1 U	0.5	0.1	0.1 U	0.5	0.1	0.1 U	0.5	0.1	0.2 U	0.2	0.04	0.1 U	0.5	0.1
1,1,2-Trichloroethane	2.3	0.2 U	0.2	0.13	0.1 U	0.2	0.1	0.1 U	0.2	0.1	0.1 U	0.2	0.1	0.2 U	0.2	0.13	0.1 U	0.2	0.1
Trichloroethene	1.4	0.2 U	0.2	0.05	0.1 U	0.2	0.1	0.1 U	0.2	0.1	0.1 U	0.2	0.1	0.2 U	0.2	0.05	0.1 U	0.2	0.1
Trichlorofluoromethane	6900	0.2 U	0.2	0.04	0.1 U	0.5	0.1	0.1 U	0.5	0.1	0.1 U	0.5	0.1	0.2 U	0.2	0.04	0.1 U	0.5	0.1
1,2,3-Trichloropropane	---	0.5 U	0.5	0.13	0.3 U	1.0	0.3	0.3 U	1.0	0.3	0.3 U	1.0	0.3	0.5 U	0.5	0.13	0.3 U	1.0	0.3
1,2,4-Trimethylbenzene	303	0.2 U	0.2	0.02	0.1 U	0.5	0.1	0.1 U	0.5	0.1	0.1 U	0.5	0.1	0.2 U	0.2	0.02	0.1 U	0.5	0.1
1,3,5-Trimethylbenzene	303	0.2 U	0.2	0.02	0.1 U	0.5	0.1	0.1 U	0.5	0.1	0.1 U	0.5	0.1	0.2 U	0.2	0.02	0.1 U	0.5	0.1
Vinyl Acetate	---	1.0 U	1.0	0.07	0.2 U	0.5	0.2	0.2 U	0.5	0.2	0.2 U	0.5	0.2	1.0 U	1.0	0.07	0.2 U	0.5	0.2
Vinyl Chloride	0.53	0.2 U	0.2	0.06	0.1 U	0.2	0.1	0.1 U	0.2	0.1	0.1 U	0.2	0.1	0.2 U	0.2	0.06	0.1 U	0.2	0.1
m,p-Xylene	1300	0.4 U	0.4	0.05	0.1 U	0.5	0.1	0.1 U	0.5	0.1	0.1 U	0.5	0.1	0.4 U	0.4	0.05	0.1 U	0.5	0.1
o-Xylene	1600	0.2 U	0.2	0.04	0.1 U	0.5	0.1	0.1 U	0.5	0.1	0.1 U	0.5	0.1	0.2 U	0.2	0.04	0.1 U	0.5	0.1
2-Chloroethylvinylether	---	1.0 UJ	1.0	0.25	NA	NA	NA	NA	NA	NA	NA	NA	NA	1.0 U	1.0	0.25	NA	NA	NA
Bromoethane	---	0.2 U	0.2	0.04	NA	NA	NA	NA	NA	NA	NA	NA	NA	0.2 U	0.2	0.04	NA	NA	NA
VOLATILES (µg/L)																			
Method SW8260C-SIM																			
Tetrachloroethene	3.3	0.020 U	0.020	0.0036	0.010 U	0.020	0.010	0.028 U	0.020	0.010	0.010 U	0.020	0.010	0.020 U	0.020	0.0036	0.010 U	0.020	0.010
Vinyl Chloride	0.53	0.020 U	0.020	0.0022	0.010 U	0.020	0.010	0.010 U	0.020	0.010	0.010 U	0.020	0.010	0.020 U	0.020	0.0022	0.010 U	0.020	0.010
Acrylonitrile	0.057	0.050 U	0.050	0.0158	NA	NA	NA	NA	NA	NA	NA	NA	NA	0.050 U	0.050	0.0158	NA	NA	NA
SEMIVOLATILES (µg/L)																			
Method SW8270D																			
Acenaphthene	120	1.0 U	1.0	0.55	0.1 U	0.5	0.1	0.1 U	0.5	0.1	0.1 U	0.5	0.1	1.0 U	1.0	0.55	0.1 U	0.5	0.1
Acenaphthylene	---	1.0 U	1.0	0.48	0.1 U	0.5	0.1	0.1 U	0.5	0.1	0.1 U	0.5	0.1	1.0 U	1.0	0.48	0.1 U	0.5	0.1
Anthracene	200	1.0 U	1.0	0.53	0.1 U	0.5	0.1	0.1 U	0.5	0.1	0.1 U	0.5	0.1	1.0 U	1.0	0.53	0.1 U	0.5	0.1
Benzo(a)anthracene	0.0018	1.0 U	1.0	0.52	0.1 U	0.5	0.1	0.1 U	0.5	0.1	0.1 U	0.5	0.1	1.0 U	1.0	0.52	0.1 U	0.5	0.1
Benzo(a)pyrene	0.00018	1.0 U	1.0	0.48	0.1 U	0.5	0.1	0.1 U	0.5	0.1	0.1 U	0.5	0.1	1.0 U	1.0	0.48	0.1 U	0.5	0.1
Benzo(b)fluoranthene	0.0018	NA	NA	NA	0.1 U	0.5	0.1	0.1 U	0.5	0.1	0.1 U	0.5	0.1	NA	NA	NA	0.1 U	0.5	0.1
Benzo(g,h,i)perylene	---	1.0 U	1.0	0.55	0.1 U	0.5	0.1	0.1 U	0.5	0.1	0.1 U	0.5	0.1	1.0 U	1.0	0.55	0.1 U	0.5	0.1
Benzo(k)fluoranthene	0.0018	NA	NA	NA	0.1 U	0.5	0.1	0.1 U	0.5	0.1	0.1 U	0.5	0.1	NA	NA	NA	0.1 U	0.5	0.1
Total Benzofluoranthenes	0.0018	1.0 U	1.0	0.48	NA	NA	NA	NA	NA	NA	NA	NA	NA	1.0 U	1.0	0.48	NA	NA	NA
Benzoic Acid	2,240	10 U	10	5.1	6 UJ	14	6	6 UJ	15	6	6 UJ	14	6	10 UJ	10	5.1	6 UJ	15	6
Benzyl Alcohol	182	5.0 U	5.0	2.0	5 U	14	5	5 U	15	5	5 U	14	5	5.0 U	5.0	2.0	5 U	15	5
4-Bromophenyl-phenylether	---	1.0 U	1.0	0.42	0.5 U	1	0.5	0.5 U	1	0.5	0.5 U	1	0.5	1.0 U	1.0	0.42	0.5 U	1	0.5
Butylbenzylphthalate	0.41	1.0 U	1.0	0.56	2 U	5	2	2 U	5	2	2 U	5	2	1.0 U	1.0	0.56	2 U	5	2
Di-n-Butylphthalate	47	1.0 U	1.0	0.54	2 U	5	2	2 U	5	2	2 U	5	2	1.0 U	1.0	0.54	2 U	5	2
Carbazole	---	1.0 U	1.0	0.31	0.5 U	1	0.5	0.5 U	1	0.5	0.5 U	1	0.5	1.0 U	1.0	0.31	0.5 U	1	0.5
4-Chloro-3-methylphenol	3700	5.0 U	5.0	2.4	0.5 U	1	0.5	0.5 UJ	1	0.5	0.5 UJ	1	0.5	5.0 U	5.0	2.4	0.5 U	1	0.5
4-Chloroaniline	---	5.0 U	5.0	2.6	0.5 U	1	0.5	0.5 U	1	0.5	0.5 U	1	0.5	5.0 U	5.0	2.6	0.5 U	1	0.5
bis(2-Chloroethoxy) Methane	---	1.0 U	1.0	0.56	0.5 U	1	0.5	0.5 U	1	0.5	0.5 U	1	0.5	1.0 U	1.0	0.56	0.5 U	1	0.5
Bis-(2-Chloroethyl) Ether	---	1.0 U	1.0	0.58	0.5 U	1	0.5	0.5 U	1	0.5	0.5 U	1	0.5	1.0 U	1.0	0.58	0.5 U	1	0.5
2-Chloronaphthalene	---	1.0 U	1.0	0.48	0.4 U	1	0.4	0.4 U	1	0.4	0.4 U	1	0.4	1.0 U	1.0	0.48	0.4 U	1	0.4
2-Chlorophenol	---	1.0 U	1.0	0.53	0.5 U	1	0.5	0.5 UJ	1	0.5	0.5 UJ	1	0.5	1.0 U	1.0	0.53	0.5 U	1	0.5
4-Chlorophenyl-phenylether	---	1.0 U	1.0	0.45	0.5 U	1	0.5	0.5 U	1	0.5	0.5 U	1	0.5	1.0 U	1.0	0.45	0.5 U	1	0.5
2,2'-Oxybis(1-Chloropropane)	---	1.0 U	1.0	0.62	0.5 U	1	0.5	0.5 U	1	0.5	0.5 U	1	0.5	1.0 U	1.0	0.62	0.5 U	1	0.5
Chrysene	0.018	1.0 U	1.0	0.55	0.1 U	0.5	0.1	0.1 U	0.5	0.1	0.1 U	0.5	0.1	1.0 U	1.0	0.55	0.1 U	0.5	0.1
Dibenz(a,h)anthracene	0.0018	1.0 U	1.0	0.48	0.1 U	0.5	0.1	0.1 U	0.5	0.1	0.1 U	0.5	0.1	1.0 U	1.0	0.48	0.1 U	0.5	0.1
Dibenzofuran	1.3	1.0 U	1.0	0.48	0.5 U	1	0.5	0.5 U	1	0.5	0.5 U	1	0.5	1.0 U	1.0	0.48	0.5 U	1	0.5
1,2-Dichlorobenzene	440	1.0 U	1.0	0.36	0.5 U	1	0.5	0.5 U	1	0.5	0.5 U	1	0.5	1.0 U	1.0	0.36	0.5 U	1	0.5
1,3-Dichlorobenzene	---	1.0 U	1.0	0.36	0.5 U	1	0.5	0.5 U	1	0.5	0.5 U	1	0.5	1.0 U	1.0	0.36	0.5 U	1	0.5
1,4-Dichlorobenzene	1.7	1.0 U	1.0	0.40	0.5 U	1	0.5	0.5 U	1	0.5	0.5 U	1	0.5	1.0 U	1.0	0.40	0.5 U	1	0.5
3,3'-Dichlorobenzidine	---	5.0 U	5.0	1.5	2 U	5	2	2 U	5	2	2 U	5	2	5.0 U	5.0	1.5	2 U	5	2
2,4-Dichlorophenol	---	5.0 U	5.0	2.6	0.5 U	1	0.5	0.5 UJ	1	0.5	0.5 UJ	1	0.5	5.0 U	5.0	2.6	0.5 U	1	0.5
Diethylphthalate	4,236	1.0 U	1.0	0.58	2 U	5	2	2 U	5	2	2 U	5	2	1.0 U	1.0	0.58	2 U	5	2
2,4-Dimethylphenol	660	1.0 U	1.0	0.36	0.5 U	1	0.5	0.5 UJ	1	0.5	0.5 UJ	1	0.5	1.0 U	1.0	0.36	0.5 U	1	0.5
Dimethylphthalate	1,100,000	1.0 U	1.0	0.53	2 U	5	2	2 U	5	2	2 U	5	2	1.0 U	1.0	0.53	2 U	5	2
4,6-Dinitro-2-Methylphenol	---	10 U	10	3.1	5 U	14	5	5 UJ	15	5	5 UJ	14	5	10 U	10	3.1	5 U	15	5
2,4-Dinitrophenol	---	10 U	10	3.5	10 U	29	10	10 UJ	29	10	10 UJ	29	10	10 UJ	10	3.5	10 U	30	10
2,4-Dinitrotoluene	---	5.0 U	5.0	2.5	1 U	5	1	1 U	5	1	1 U	5	1	5.0 U	5.0	2.5	1 U	5	1
2,6-Dinitrotoluene	---	5.0 U	5.0	2.4	0.5 U	1	0.5	0.5 U	1	0.5	0.5 U	1	0.5	5.0 U	5.0	2.4	0.5 U	1	0.5
bis(2-Ethylhexyl)phthalate	1.2	1.0 U	1.0	1.9	2 U	5	2	2 U	5	2	2 U	5	2	**3.3**	1.0	1.9	2 U	5	2

TABLE L-1
GROUNDWATER ANALYTICAL RESULTS
BOEING ISAACSON-THOMPSON
REMEDIAL INVESTIGATION

Location:		IT-DUP-2 (IT-MW-12)			IT-MW-12			IT-MW-12			IT-MW-12			IT-MW-13			IT-MW-13		
Laboratory Sample ID:	Preliminary	UA86A/UA86E/UA87A/UA87D			6571479/6571480/UL18H			6690486/6690487/6690488/UZ00F			6788051/6788052/6788053/VJ32K			UB08D/UB08I/UB09D/UB09I			6571481/6571482/UL18I		
Laboratory Data Package ID:	Cleanup	UA86/UA87			1293989/UL18			1316296/UZ00			1335483/VJ32			UB08/UB09			1293989/UL18		
Sample Date:	Levels	12/12/2011			03/07/2012			6/15/2012			9/12/2012			12/13/2011			03/07/2012		
		Result	Reporting Limit	Detection Limit	Result	Reporting Limit	Detection Limit	Result	Reporting Limit	Detection Limit	Result	Reporting Limit	Detection Limit	Result	Reporting Limit	Detection Limit	Result	Reporting Limit	Detection Limit
Fluoranthene	11	1.0 U	1.0	0.52	0.1 U	0.5	0.1	0.1 U	0.5	0.1	0.1 U	0.5	0.1	1.0 U	1.0	0.52	0.1 U	0.5	0.1
Fluorene	45	1.0 U	1.0	0.56	0.1 U	0.5	0.1	0.1 U	0.5	0.1	0.1 U	0.5	0.1	1.0 U	1.0	0.56	0.1 U	0.5	0.1
Hexachlorobenzene	---	1.0 U	1.0	0.47	0.1 U	0.5	0.1	0.1 U	0.5	0.1	0.1 U	0.5	0.1	1.0 U	1.0	0.47	0.1 U	0.5	0.1
Hexachlorobutadiene	---	1.0 U	1.0	0.31	0.5 U	1	0.5	0.5 U	1	0.5	0.5 U	1	0.5	1.0 U	1.0	0.31	0.5 U	1	0.5
Hexachlorocyclopentadiene	---	5.0 U	5.0	1.2	5 U	14	5	5 U	15	5	5 U	14	5	5.0 U	5.0	1.2	5 U	15	5
Hexachloroethane	---	1.0 U	1.0	0.35	1 U	5	1	1 U	5	1	1 U	5	1	1.0 U	1.0	0.35	1 U	5	1
Indeno(1,2,3-cd)pyrene	0.0018	1.0 U	1.0	0.48	0.1 U	0.5	0.1	0.1 U	0.5	0.1	0.1 U	0.5	0.1	1.0 U	1.0	0.48	0.1 U	0.5	0.1
Isophorone	---	1.0 U	1.0	0.48	0.5 U	1	0.5	0.5 U	1	0.5	0.5 U	1	0.5	1.0 U	1.0	0.48	0.5 U	1	0.5
1-Methylnaphthalene	2.3	1.0 U	1.0	0.48	0.1 U	0.5	0.1	0.1 U	0.5	0.1	0.1 U	0.5	0.1	1.0 U	1.0	0.48	0.1 U	0.5	0.1
2-Methylnaphthalene	64	1.0 U	1.0	0.48	0.1 U	0.5	0.1	0.1 U	0.5	0.1	0.1 U	0.5	0.1	1.0 U	1.0	0.48	0.1 U	0.5	0.1
2-Methylphenol	3100	1.0 U	1.0	0.53	0.5 U	1	0.5	0.5 UJ	1	0.5	0.5 UJ	1	0.5	1.0 U	1.0	0.53	0.5 U	1	0.5
4-Methylphenol	330	1.0 U	1.0	0.52	0.5 U	1	0.5	0.5 UJ	1	0.5	0.5 UJ	1	0.5	1.0 U	1.0	0.52	0.5 U	1	0.5
Naphthalene	26	1.0 U	1.0	0.52	**0.2** J1	0.5	0.1	0.1 U	0.5	0.1	**0.1** J1	0.5	0.1	1.0 U	1.0	0.52	**0.1** J1	0.5	0.1
2-Nitroaniline	---	5.0 U	5.0	2.6	0.5 U	1	0.5	0.5 U	1	0.5	0.5 U	1	0.5	5.0 U	5.0	2.6	0.5 U	1	0.5
3-Nitroaniline	---	5.0 U	5.0	2.3	0.5 U	1	0.5	0.5 U	1	0.5	0.5 U	1	0.5	5.0 U	5.0	2.3	0.5 U	1	0.5
4-Nitroaniline	---	5.0 U	5.0	2.2	0.5 U	1	0.5	0.5 U	1	0.5	0.5 U	1	0.5	5.0 U	5.0	2.2	0.5 U	1	0.5
Nitrobenzene	---	1.0 U	1.0	0.58	0.5 U	1	0.5	0.5 U	1	0.5	0.5 U	1	0.5	1.0 U	1.0	0.58	0.5 U	1	0.5
2-Nitrophenol	---	5.0 U	5.0	2.0	0.5 U	1	0.5	0.5 UJ	1	0.5	0.5 UJ	1	0.5	5.0 U	5.0	2.0	0.5 U	1	0.5
4-Nitrophenol	---	5.0 U	5.0	2.6	10 U	29	10	10 UJ	29	10	10 UJ	29	10	5.0 U	5.0	2.6	10 U	30	10
N-Nitroso-Di-N-Propylamine	---	1.0 U	1.0	0.56	0.5 U	1	0.5	0.5 U	1	0.5	0.5 U	1	0.5	1.0 U	1.0	0.56	0.5 U	1	0.5
N-Nitrosodiphenylamine	1.96	1.0 U	1.0	0.46	0.5 U	1	0.5	0.5 U	1	0.5	0.5 U	1	0.5	1.0 U	1.0	0.46	0.5 U	1	0.5
Di-n-Octyl phthalate	---	1.0 U	1.0	0.51	2 U	5	2	2 U	5	2	2 U	5	2	1.0 U	1.0	0.51	2 U	5	2
Pentachlorophenol	---	5.0 U	5.0	2.4	1 U	5	1	1 UJ	5	1	1 UJ	5	1	5.0 UJ	5.0	2.4	1 U	5	1
Phenanthrene	---	1.0 U	1.0	0.56	0.1 U	0.5	0.1	0.1 U	0.5	0.1	0.1 U	0.5	0.1	1.0 U	1.0	0.56	0.1 U	0.5	0.1
Phenol	41,000	1.0 U	1.0	0.52	0.5 U	1	0.5	0.5 UJ	1	0.5	0.5 U	1	0.5	1.0 U	1.0	0.52	0.5 U	1	0.5
Pyrene	9.8	1.0 U	1.0	0.55	0.1 U	0.5	0.1	0.1 U	0.5	0.1	0.1 U	0.5	0.1	1.0 U	1.0	0.55	0.1 U	0.5	0.1
1,2,4-Trichlorobenzene	1.13	1.0 U	1.0	0.38	0.5 U	1	0.5	0.5 U	1	0.5	0.5 U	1	0.5	1.0 U	1.0	0.38	0.5 U	1	0.5
2,4,5-Trichlorophenol	---	5.0 U	5.0	2.2	0.5 U	1	0.5	0.5 UJ	1	0.5	0.5 UJ	1	0.5	5.0 U	5.0	2.2	0.5 U	1	0.5
2,4,6-Trichlorophenol	---	5.0 U	5.0	2.4	0.5 U	1	0.5	0.5 UJ	1	0.5	0.5 UJ	1	0.5	5.0 U	5.0	2.4	0.5 U	1	0.5
cPAHs (µg/L)																			
Method SW8270D-SIM																			
Benzo(a)anthracene	0.0018	0.010 U	0.010	0.0063	0.0047 U	0.0095	0.0047	0.0048 U	0.0097	0.0048	0.0048 U	0.0097	0.0048	0.010 U	0.010	0.0063	0.0048 U	0.0097	0.0048
Benzo(a)pyrene	0.00018	0.010 U	0.010	0.0048	0.0047 U	0.0095	0.0047	0.0048 U	0.0097	0.0048	0.0048 U	0.0097	0.0048	0.010 U	0.010	0.0048	0.0048 U	0.0097	0.0048
Benzo(b)fluoranthene	0.0018	NA	NA	NA	0.0047 U	0.0095	0.0047	**0.005** J1	0.0097	0.0048	0.0048 U	0.0097	0.0048	NA	NA	NA	0.0048 U	0.0097	0.0048
Benzo(k)fluoranthene	0.0018	NA	NA	NA	0.0047 U	0.0095	0.0047	0.0048 U	0.0097	0.0048	0.0048 U	0.0097	0.0048	NA	NA	NA	0.0048 U	0.0097	0.0048
Total Benzofluoranthenes	0.0018	0.020 U	0.020	0.0099	NA	NA	NA	NA	NA	NA	NA	NA	NA	0.020 U	0.020	0.0099	NA	NA	NA
Chrysene	0.018	0.010 U	0.010	0.0046	0.0047 U	0.0095	0.0047	0.0048 U	0.0097	0.0048	0.0048 U	0.0097	0.0048	0.010 U	0.010	0.0046	0.0048 U	0.0097	0.0048
Dibenz(a,h)anthracene	0.0018	0.010 U	0.010	0.0048	0.0038 U	0.0095	0.0038	**0.005** J1	0.0097	0.0039	0.0039 U	0.0097	0.0039	0.010 U	0.010	0.0048	0.0039 U	0.0097	0.0039
Indeno(1,2,3-cd)pyrene	0.0018	0.010 U	0.010	0.0046	0.0038 U	0.0095	0.0038	**0.006** J1	0.0097	0.0039	0.0039 U	0.0097	0.0039	0.010 U	0.010	0.0046	0.0039 U	0.0097	0.0039
Pyrene	9.8	NA	NA	NA	0.0095 U	0.047	0.0095	0.010 U	0.048	0.010	0.0097 U	0.048	0.0097	NA	NA	NA	0.0097 U	0.048	0.0097
cPAH TEQ	0.00018	ND	NA	NA	ND	NA	NA	**0.0016** J	NA	NA	ND	NA	NA	ND	NA	NA	ND	NA	NA
PCBs (µg/L)																			
Method SW8082																			
Aroclor 1016	0.000023	0.010 U	0.010	0.0025	0.0057 U	0.0095	0.0057	0.0060 U	0.010	0.0060	0.0058 U	0.0097	0.0058	0.010 U	0.010	0.0025	0.0060 U	0.010	0.0060
Aroclor 1221	---	0.010 U	0.010	0.0028	0.0057 U	0.0095	0.0057	0.0060 U	0.010	0.0060	0.0058 U	0.0097	0.0058	0.010 U	0.010	0.0028	0.0060 U	0.010	0.0060
Aroclor 1232	---	0.010 U	0.010	0.0028	0.0067 U	0.0095	0.0067	0.0070 U	0.010	0.0070	0.0068 U	0.0097	0.0068	0.010 U	0.010	0.0028	0.0070 U	0.010	0.0070
Aroclor 1242	0.000023	0.010 U	0.010	0.0028	0.0057 U	0.0095	0.0057	0.0060 U	0.010	0.0060	0.0058 U	0.0097	0.0058	0.010 U	0.010	0.0028	0.0060 U	0.010	0.0060
Aroclor 1248	0.000023	0.010 U	0.010	0.0028	0.0048 U	0.0095	0.0048	0.0050 U	0.010	0.0050	0.0048 U	0.0097	0.0048	0.010 U	0.010	0.0028	0.0050 U	0.010	0.0050
Aroclor 1254	0.0000055	**0.0080** J1	0.010	0.0028	0.0048 U	0.0095	0.0048	0.0050 U	0.010	0.0050	0.0048 U	0.0097	0.0048	**0.015**	0.010	0.0028	**0.014**	0.010	0.0050
Aroclor 1260	0.000023	0.010 U	0.010	0.0028	0.0048 U	0.0095	0.0048	0.0050 U	0.010	0.0050	0.0048 U	0.0097	0.0048	0.010 U	0.010	0.0028	0.0050 U	0.010	0.0050
Total PCBs	0.000023	**0.0080** J	NA	NA	ND	NA	NA	ND	NA	NA	ND	NA	NA	**0.015**	NA	NA	**0.014**	NA	NA

TABLE L-1
GROUNDWATER ANALYTICAL RESULTS
BOEING ISAACSON-THOMPSON
REMEDIAL INVESTIGATION

Location:		IT-DUP-2 (IT-MW-12)			IT-MW-12			IT-MW-12			IT-MW-12			IT-MW-13			IT-MW-13		
Laboratory Sample ID:	Preliminary	UA86A/UA86E/UA87A/UA87D			6571479/6571480/UL18H			6690486/6690487/6690488/UZ00F			6788051/6788052/6788053/VJ32K			UB08D/UB08I/UB09D/UB09I			6571481/6571482/UL18I		
Laboratory Data Package ID:	Cleanup	UA86/UA87			1293989/UL18			1316296/UZ00			1335483/VJ32			UB08/UB09			1293989/UL18		
Sample Date:	Levels	12/12/2011			03/07/2012			6/15/2012			9/12/2012			12/13/2011			03/07/2012		
		Result	Reporting Limit	Detection Limit	Result	Reporting Limit	Detection Limit	Result	Reporting Limit	Detection Limit	Result	Reporting Limit	Detection Limit	Result	Reporting Limit	Detection Limit	Result	Reporting Limit	Detection Limit
TOTAL PETROLEUM HYDROCARBONS (mg/L)																			
NWTPH-Dx																			
Diesel-Range Organics	0.5	0.10 U	0.10	0.022	0.068 U	0.24	0.068	0.028 U	0.095	0.028	0.029 U	0.096	0.029	0.10 U	0.10	0.022	0.073 U	0.26	0.073
Oil-Range Organics	0.5	0.20 U	0.20	0.044	0.97 U	2.9	0.97	0.066 U	0.240	0.066	0.067 U	0.240	0.067	0.20 U	0.20	0.044	1.0 U	3.1	1.0
NWTPH-G																			
Gasoline-Range Organics	1.0/0.8	0.25 U	0.25	0.06	0.05 U	0.25	0.05	0.05 U	0.25	0.05	0.05 U	0.25	0.05	0.25 U	0.25	0.06	0.05 U	0.25	0.05
TOTAL METALS (µg/L)																			
Method 200.8																			
Antimony	---	0.2 U	0.2	0.010	0.42 U	1.0	0.42	0.33 U	1.0	0.33	0.33 U	1.0	0.33	0.2 U	0.2	0.010	0.42 U	1.0	0.42
Arsenic	---	**66.3**	0.5	0.048	**27.9**	2.0	0.95	**13.7**	2.0	0.20	**16.8**	2.0	0.40	**14.5**	0.2	0.048	**11.2**	2.0	0.95
Barium	---	**162**	0.5	0.020	**42.4**	2.0	0.69	**15.6**	2.0	0.41	**20.6**	2.0	0.41	**18.3**	0.5	0.020	**15.0**	2.0	0.69
Beryllium	---	0.2 U	0.2	0.021	0.13 U	0.50	0.13	0.025 U	0.50	0.025	**0.039** J1	0.50	0.025	0.2 U	0.2	0.021	0.13 U	0.50	0.13
Cadmium	---	0.1 U	0.1	0.010	0.20 U	0.50	0.20	**0.051** J1	0.50	0.048	0.082 U	0.50	0.082	0.1 U	0.1	0.010	0.20 U	0.50	0.20
Chromium	---	**0.9**	0.5	0.045	0.60 U	2.0	0.60	**0.16** J1	2.0	0.10	0.50 U	2.0	0.50	**0.8**	0.5	0.045	**1.5** J1	2.0	0.60
Copper	---	**1.3**	0.5	0.158	0.38 U	2.0	0.38	0.15 U	2.0	0.15	0.40 U	2.0	0.40	**4.8**	0.5	0.158	**3.2**	2.0	0.38
Lead	---	**0.2**	0.1	0.046	0.080 U	1.0	0.080	**0.093** J1	1.0	0.034	0.034 U	1.0	0.034	**0.3**	0.1	0.046	**0.093** J1	1.0	0.080
Nickel	---	**3.6** J	0.5	0.079	**0.70** J1	2.0	0.50	**0.64** J1	2.0	0.13	0.35 U	2.0	0.35	**8**	1	0.20	**7.5**	2.0	0.50
Selenium	---	2 U	2	0.13	0.27 U	2.0	0.27	0.18 U	2.0	0.18	0.50 U	2.0	0.50	**2.2**	0.5	0.127	**0.87** J1	2.0	0.27
Silver	---	0.2 U	0.2	0.008	0.098 U	0.50	0.098	0.10 U	0.50	0.10	0.10 U	0.50	0.10	0.2 U	0.2	0.008	0.098 U	0.50	0.098
Thallium	---	0.2 U	0.2	0.004	0.15 U	0.50	0.15	0.029 U	0.50	0.029	0.15 U	0.50	0.15	0.2 U	0.2	0.004	0.15 U	0.50	0.15
Zinc	---	4 U	4	0.50	4.0 U	15.0	4.0	1.1 U	15.0	1.1	1.1 U	15.0	1.1	**6**	4	0.50	4.0 U	15.0	4.0
Method SW7196A (mg/L)																			
Chromium VI	0.00058	0.010 U	0.010	0.00300	0.010 U	0.010	0.00300	0.010 U	0.010	0.00300	0.010 U	0.010	0.00300	0.010 U	0.010	0.00300	0.010 U	0.010	0.00300
Method SW7470A/EPA 1631E (ng/L)																			
Mercury	12	20.0 U	20.0	2.60	1.60 U	5.00	1.60	**0.259** J1	0.500	0.160	**0.299** J1	0.500	0.160	20.0 U	20.0	2.60	**4.73** J1	10.0	3.2
DISSOLVED METALS (µg/L)																			
Methods 200.8/SW7196A																			
Antimony	150	0.2 U	0.2	0.010	0.42 U	1.0	0.42	0.33 U	1.0	0.33	0.33 U	1.0	0.33	0.2 U	0.2	0.010	0.42 U	1.0	0.42
Arsenic	8	**66.9**	0.5	0.048	**25.4**	2.0	0.95	**12.6**	2.0	0.20	**18.1**	2.0	0.40	**13.6**	0.5	0.048	**12.3**	2.0	0.95
Barium	770	**175**	0.5	0.020	**43.8**	2.0	0.69	**17.9**	2.0	0.41	**21.5**	2.0	0.41	**17.8**	0.5	0.020	**14.9**	2.0	0.69
Beryllium	12	0.2 U	0.2	0.021	0.13 U	0.50	0.13	0.025 U	0.50	0.025	0.025 U	0.50	0.025	0.2 U	0.2	0.021	0.13 U	0.50	0.13
Cadmium	0.25	0.1 U	0.1	0.010	0.20 U	0.50	0.20	**0.13** J1	0.50	0.048	0.082 U	0.50	0.082	0.1 U	0.1	0.010	0.20 U	0.50	0.20
Chromium	74	0.5 U	0.5	0.045	0.60 U	2.0	0.60	**0.13** J1	2.0	0.10	0.50 U	2.0	0.50	**1.0**	0.5	0.045	**1.5** J1	2.0	0.60
Copper	8	**0.9**	0.5	0.158	0.38 U	2.0	0.38	0.15 U	2.0	0.15	0.40 U	2.0	0.40	**4.1**	0.5	0.158	**2.9**	2.0	0.38
Lead	2.5	0.1 U	0.1	0.046	0.080 U	1.0	0.080	**0.19** J1	1.0	0.034	0.034 U	1.0	0.034	0.1 U	0.1	0.046	0.080 U	1.0	0.080
Nickel	8.2	**2.4**	0.5	0.079	**0.61** J1	2.0	0.50	**0.40** J1	2.0	0.13	**0.46** J1	2.0	0.35	**7.9**	0.5	0.079	**7.6**	2.0	0.50
Selenium	5	**2**	2	0.13	0.27 U	2.0	0.27	0.18 U	2.0	0.18	0.50 U	2.0	0.50	**2.1**	0.5	0.127	**0.75** J1	2.0	0.27
Silver	22	0.2 U	0.2	0.008	0.098 U	0.50	0.098	0.10 U	0.50	0.10	0.10 U	0.50	0.10	0.2 U	0.2	0.008	0.098 U	0.50	0.098
Thallium	0.47	0.2 U	0.2	0.004	0.15 U	0.50	0.15	0.029 U	0.50	0.029	0.15 U	0.50	0.15	0.2 U	0.2	0.004	0.15 U	0.50	0.15
Zinc	56	4 U	4	0.50	4.0 U	15.0	4.0	**1.5** J1	15.0	1.1	1.1 U	15.0	1.1	**6**	4	0.50	**6.4** J1	15.0	4.0
Method SW7470A/EPA 1631E (ng/L)																			
Mercury	12	20.0 U	20.0	2.60	**1.11**	5.00	1.60	**1.75**	0.500	0.160	**1.10**	0.500	0.160	20.0 U	20.0	2.60	**4.02** J1	10.0	3.2
CONVENTIONALS (mg/L)																			
Chloride (Method 300.0)	---	NA	NA	NA	NA	NA	NA	**36.0**	4.0	2.0	**70.0**	8.0	4.0	NA	NA	NA	NA	NA	NA
Nitrate (Method 300.0)	---	0.1 U	0.1	0.007	0.050 U	0.10	0.050	0.050 U	0.10	0.050	0.050 U	0.10	0.050	0.1 U	0.1	0.007	0.050 U	0.10	0.050
Sulfate (Method 300.0)	---	**104**	5.0	2.95	**18.3**	5.0	1.5	**6.0**	1.0	0.30	**8.4**	1.0	0.30	**76.7**	5.0	2.95	**105**	20.0	6.0
Total Dissolved Solids (Method 160.1)	---	**1720**	20.0	20.0	**611**	60.0	19.4	**330**	30.0	9.7	**330**	30.0	9.7	**616**	10.0	10.0	**604**	60.0	19.4
FIELD PARAMETERS																			
Temperature (°C)	---	15.61	NA	NA	13.65	NA	NA	15.1	NA	NA	16.98	NA	NA	15.93	NA	NA	14.73	NA	NA
Conductivity (uS/cm)	---	6232	NA	NA	675	NA	NA	428	NA	NA	605	NA	NA	22255	NA	NA	592	NA	NA
Dissolved Oxygen (mg/L)	---	0.98	NA	NA	0.40	NA	NA	0.46	NA	NA	2.40	NA	NA	0.86	NA	NA	0.39	NA	NA
pH (SU)	---	7.05	NA	NA	8.84	NA	NA	NA	NA	NA	6.39	NA	NA	6.69	NA	NA	8.54	NA	NA
ORP (mV)	---	-99.9	NA	NA	-123.5	NA	NA	-113.0	NA	NA	-105	NA	NA	-151.8	NA	NA	-62.0	NA	NA
Turbidity (NTU)	---	13.89	NA	NA	5.81	NA	NA	9.18	NA	NA	48.7	NA	NA	5.72	NA	NA	2.9	NA	NA
Ferrous Iron (mg/L)	---	NA	NA	NA	1.8	NA	NA	4.8	NA	NA	2.2	NA	NA	NA	NA	NA	1.8	NA	NA

TABLE L-1
GROUNDWATER ANALYTICAL RESULTS
BOEING ISAACSON-THOMPSON
REMEDIAL INVESTIGATION

Location:		IT-MW-13			IT-MW-13			IT-MW-14			IT-MW-14			IT-MW-14			IT-MW-14		
Laboratory Sample ID:	Preliminary	6689156/6689157/6689158/UY55H			6788027/6788028/6788029/VJ32L			UB08C/UB08H/UB09C/UB09H			6571467/6571468/UL18B			6697964/6697965/6697966/UZ66C			6788010/6788011/6788012/VJ03H		
Laboratory Data Package ID:	Cleanup	1316071/UY55			1335483/VJ32			UB08/UB09			1293989/UL18			1317686/UZ66			1335480/VJ03		
Sample Date:	Levels	6/14/2012			9/12/2012			12/13/2011			03/07/2012			6/21/2012			9/11/2012		
		Result	Reporting Limit	Detection Limit	Result	Reporting Limit	Detection Limit	Result	Reporting Limit	Detection Limit	Result	Reporting Limit	Detection Limit	Result	Reporting Limit	Detection Limit	Result	Reporting Limit	Detection Limit
VOLATILES (µg/L)																			
Method SW8260C																			
Acetone	110,000	3.0 U	5.0	3.0	**3.1** J1	5.0	3.0	5.0 U	5.0	2.1	3.0 U	5.0	3.0	3.0 U	5.0	3.0	3.0 U	5.0	3.0
Acrolein	---	5.0 U	25	5.0	5.0 U	25	5.0	5.0 U	5.0	2.5	5.0 U	25	5.0	5.0 U	25	5.0	5.0 U	25	5.0
Acrylonitrile	0.057	1.0 U	5.0	1.0	1.0 U	5.0	1.0	1.0 U	1.0	0.60	1.0 U	5.0	1.0	1.0 U	5.0	1.0	1.0 U	5.0	1.0
Benzene	2	0.1 U	0.2	0.1	0.1 U	0.2	0.1	0.2 U	0.2	0.03	0.1 U	0.2	0.1	0.1 U	0.2	0.1	0.1 U	0.2	0.1
Bromobenzene	---	0.1 U	0.5	0.1	0.1 U	0.5	0.1	0.2 U	0.2	0.06	0.1 U	0.5	0.1	0.1 U	0.5	0.1	0.1 U	0.5	0.1
Bromochloromethane	---	0.1 U	0.5	0.1	0.1 U	0.5	0.1	0.2 U	0.2	0.06	0.1 U	0.5	0.1	0.1 U	0.5	0.1	0.1 U	0.5	0.1
Bromodichloromethane	17	0.1 U	0.5	0.1	0.1 U	0.5	0.1	0.2 U	0.2	0.05	0.1 U	0.5	0.1	0.1 U	0.5	0.1	0.1 U	0.5	0.1
Bromoform	---	0.1 U	0.5	0.1	0.1 U	0.5	0.1	0.2 UJ	0.2	0.06	0.1 U	0.5	0.1	0.1 UJ	0.5	0.1	0.1 U	0.5	0.1
Bromomethane	---	0.1 U	0.5	0.1	0.1 U	0.5	0.1	1.0 U	1.0	0.25	0.1 U	0.5	0.1	0.1 U	0.5	0.1	0.1 U	0.5	0.1
2-Butanone	73,000	1.0 U	5.0	1.0	1.0 U	5.0	1.0	5.0 U	5.0	0.81	1.0 U	5.0	1.0	1.0 U	5.0	1.0	1.0 U	5.0	1.0
n-Butylbenzene	780	0.1 U	0.5	0.1	0.1 U	0.5	0.1	0.2 U	0.2	0.02	0.1 U	0.5	0.1	0.1 U	0.5	0.1	0.1 U	0.5	0.1
sec-Butylbenzene	---	0.1 U	0.5	0.1	0.1 U	0.5	0.1	0.2 U	0.2	0.02	0.1 U	0.5	0.1	0.1 U	0.5	0.1	0.1 U	0.5	0.1
tert-Butylbenzene	---	0.1 U	0.5	0.1	0.1 U	0.5	0.1	0.2 U	0.2	0.03	0.1 U	0.5	0.1	0.1 U	0.5	0.1	0.1 U	0.5	0.1
Carbon Disulfide	3900	0.4 U	0.5	0.4	0.4 U	0.5	0.4	0.2 U	0.2	0.04	0.4 U	0.5	0.4	0.4 U	0.5	0.4	0.4 U	0.5	0.4
Carbon Tetrachloride	0.46	0.1 U	0.2	0.1	0.1 U	0.2	0.1	0.2 U	0.2	0.04	0.1 U	0.2	0.1	0.1 U	0.2	0.1	0.1 U	0.2	0.1
Chlorobenzene	270	0.1 U	0.5	0.1	0.1 U	0.5	0.1	0.2 U	0.2	0.02	0.1 U	0.5	0.1	0.1 U	0.5	0.1	0.1 U	0.5	0.1
Chloroethane	21,000	0.1 U	0.5	0.1	0.1 U	0.5	0.1	0.2 U	0.2	0.09	0.1 U	0.5	0.1	0.1 U	0.5	0.1	0.1 U	0.5	0.1
Chloroform	9.4	0.1 U	0.2	0.1	0.1 U	0.2	0.1	0.2 U	0.2	0.03	0.1 U	0.2	0.1	0.1 U	0.2	0.1	0.1 U	0.2	0.1
Chloromethane	10.3	0.2 U	0.5	0.2	0.2 U	0.5	0.2	0.5 U	0.5	0.10	0.2 U	0.5	0.2	0.2 U	0.5	0.2	0.2 U	0.5	0.2
2-Chlorotoluene	---	0.1 U	0.5	0.1	0.1 U	0.5	0.1	0.2 U	0.2	0.02	0.1 U	0.5	0.1	0.1 U	0.5	0.1	0.1 U	0.5	0.1
4-Chlorotoluene	2600	0.1 U	0.5	0.1	0.1 U	0.5	0.1	0.2 U	0.2	0.02	0.1 U	0.5	0.1	0.1 U	0.5	0.1	0.1 U	0.5	0.1
1,2-Dibromo-3-chloropropane	---	0.2 U	0.5	0.2	0.2 U	0.5	0.2	0.5 U	0.5	0.04	0.2 U	0.5	0.2	0.2 U	0.5	0.2	0.2 U	0.5	0.2
Dibromochloromethane	---	0.1 U	0.5	0.1	0.1 U	0.5	0.1	0.2 U	0.2	0.05	0.1 U	0.5	0.1	0.1 U	0.5	0.1	0.1 U	0.5	0.1
Dibromomethane	---	0.1 U	0.5	0.1	0.1 U	0.5	0.1	0.2 U	0.2	0.14	0.1 U	0.5	0.1	0.1 U	0.5	0.1	0.1 U	0.5	0.1
trans-1,4-Dichloro-2-butene	---	1.0 U	5.0	1.0	1.0 U	5.0	1.0	1.0 U	1.0	0.32	1.0 U	5.0	1.0	1.0 UJ	5.0	1.0	1.0 U	5.0	1.0
1,2-Dichlorobenzene	440	0.1 U	0.5	0.1	0.1 U	0.5	0.1	0.2 U	0.2	0.04	0.1 U	0.5	0.1	0.1 U	0.5	0.1	0.1 U	0.5	0.1
1,3-Dichlorobenzene	960	0.1 U	0.5	0.1	0.1 U	0.5	0.1	0.2 U	0.2	0.04	0.1 U	0.5	0.1	0.1 U	0.5	0.1	0.1 U	0.5	0.1
1,4-Dichlorobenzene	1.7	0.1 U	0.5	0.1	0.1 U	0.5	0.1	0.2 U	0.2	0.04	0.1 U	0.5	0.1	0.1 U	0.5	0.1	0.1 U	0.5	0.1
1,1-Dichloroethane	33	0.1 U	0.5	0.1	0.1 U	0.5	0.1	0.2 U	0.2	0.05	0.1 U	0.5	0.1	0.1 U	0.5	0.1	0.1 U	0.5	0.1
1,2-Dichloroethane	3.6	0.1 U	0.2	0.1	0.1 U	0.2	0.1	0.2 U	0.2	0.07	0.1 U	0.2	0.1	0.1 U	0.2	0.1	0.1 U	0.2	0.1
1,1-Dichloroethene	3.2	0.1 U	0.2	0.1	0.1 U	0.2	0.1	0.2 U	0.2	0.05	0.1 U	0.2	0.1	0.1 U	0.2	0.1	0.1 U	0.2	0.1
cis-1,2-Dichloroethene	130	0.1 U	0.2	0.1	0.1 U	0.2	0.1	0.2 U	0.2	0.04	0.1 U	0.2	0.1	0.1 U	0.2	0.1	0.1 U	0.2	0.1
trans-1,2-Dichloroethene	940	0.1 U	0.2	0.1	0.1 U	0.2	0.1	0.2 U	0.2	0.05	0.1 U	0.2	0.1	0.1 U	0.2	0.1	0.1 U	0.2	0.1
1,2-Dichloropropane	3.7	0.1 U	0.5	0.1	0.1 U	0.5	0.1	0.2 U	0.2	0.04	0.1 U	0.5	0.1	0.1 U	0.5	0.1	0.1 U	0.5	0.1
1,3-Dichloropropane	---	0.1 U	0.5	0.1	0.1 U	0.5	0.1	0.2 U	0.2	0.06	0.1 U	0.5	0.1	0.1 U	0.5	0.1	0.1 U	0.5	0.1
2,2-Dichloropropane	---	0.1 U	0.5	0.1	0.1 U	0.5	0.1	0.2 U	0.2	0.05	0.1 U	0.5	0.1	0.1 U	0.5	0.1	0.1 U	0.5	0.1
1,1-Dichloropropene	---	0.1 U	0.5	0.1	0.1 U	0.5	0.1	0.2 U	0.2	0.03	0.1 U	0.5	0.1	0.1 U	0.5	0.1	0.1 U	0.5	0.1
cis-1,3-Dichloropropene	---	0.1 U	0.2	0.1	0.1 U	0.2	0.1	0.2 U	0.2	0.06	0.1 U	0.2	0.1	0.1 U	0.2	0.1	0.1 U	0.2	0.1
trans-1,3-Dichloropropene	---	0.1 U	0.2	0.1	0.1 U	0.2	0.1	0.2 U	0.2	0.08	0.1 U	0.2	0.1	0.1 U	0.2	0.1	0.1 U	0.2	0.1
Ethylbenzene	1.7	0.1 U	0.5	0.1	0.1 U	0.5	0.1	0.2 U	0.2	0.04	0.1 U	0.5	0.1	0.1 U	0.5	0.1	0.1 U	0.5	0.1
Ethylene Dibromide	---	0.1 U	0.5	0.1	0.1 U	0.5	0.1	0.2 U	0.2	0.08	0.1 U	0.5	0.1	0.1 U	0.5	0.1	0.1 U	0.5	0.1
Hexachlorobutadiene	---	0.1 U	0.5	0.1	0.1 U	0.5	0.1	0.5 U	0.5	0.07	0.1 U	0.5	0.1	0.1 U	0.5	0.1	0.1 U	0.5	0.1
2-Hexanone	3200	1.0 U	5.0	1.0	1.0 U	5.0	1.0	5.0 U	5.0	0.90	1.0 U	5.0	1.0	1.0 U	5.0	1.0	1.0 U	5.0	1.0
Isopropylbenzene	270	0.1 U	0.5	0.1	0.1 U	0.5	0.1	0.2 U	0.2	0.02	0.1 U	0.5	0.1	0.1 U	0.5	0.1	0.1 U	0.5	0.1
4-Isopropyltoluene	---	0.1 U	0.5	0.1	0.1 U	0.5	0.1	0.2 U	0.2	0.03	0.1 U	0.5	0.1	0.1 U	0.5	0.1	0.1 U	0.5	0.1
Methyl Iodide	---	0.1 UJ	0.5	0.1	0.1 U	0.5	0.1	1.0 U	1.0	0.23	0.1 U	0.5	0.1	0.1 U	0.5	0.1	0.1 U	0.5	0.1
4-Methyl-2-Pentanone (MIBK)	19,000	1.0 U	5.0	1.0	1.0 U	5.0	1.0	5.0 U	5.0	0.97	1.0 U	5.0	1.0	1.0 U	5.0	1.0	1.0 U	5.0	1.0
Methylene Chloride	230	0.2 U	0.5	0.2	0.2 U	0.5	0.2	0.5 U	0.5	0.48	0.2 U	0.5	0.2	0.2 U	0.5	0.2	0.2 U	0.5	0.2
Naphthalene	26	0.1 U	0.5	0.1	0.1 U	0.5	0.1	0.5 U	0.5	0.12	0.1 U	0.5	0.1	0.1 U	0.5	0.1	0.1 U	0.5	0.1
n-Propylbenzene	530	0.1 U	0.5	0.1	0.1 U	0.5	0.1	0.2 U	0.2	0.02	0.1 U	0.5	0.1	0.1 U	0.5	0.1	0.1 U	0.5	0.1
Styrene	77,000	0.1 U	0.5	0.1	0.1 U	0.5	0.1	0.2 U	0.2	0.04	0.1 U	0.5	0.1	0.1 U	0.5	0.1	0.1 U	0.5	0.1
1,1,1,2-Tetrachloroethane	---	0.1 U	0.5	0.1	0.1 U	0.5	0.1	0.2 U	0.2	0.04	0.1 U	0.5	0.1	0.1 U	0.5	0.1	0.1 U	0.5	0.1
1,1,2,2-Tetrachloroethane	0.33	0.1 U	0.2	0.1	0.1 U	0.2	0.1	0.2 U	0.2	0.06	0.1 U	0.2	0.1	0.1 U	0.2	0.1	0.1 U	0.2	0.1
Tetrachloroethene	3.3	0.1 U	0.2	0.1	0.1 U	0.2	0.1	0.2 U	0.2	0.05	0.1 U	0.2	0.1	0.1 U	0.2	0.1	0.1 U	0.2	0.1
Toluene	1300	0.1 U	0.2	0.1	0.1 U	0.2	0.1	0.2 U	0.2	0.04	0.1 U	0.2	0.1	0.1 U	0.2	0.1	0.1 U	0.2	0.1
1,1,2-Trichloro-1,2,2-trifuoroethane	59,000	0.2 U	0.5	0.2	0.2 U	0.5	0.2	0.2 U	0.2	0.04	0.2 U	0.5	0.2	0.2 U	0.5	0.2	0.2 U	0.5	0.2
1,2,3-Trichlorobenzene	---	0.1 U	0.5	0.1	0.1 U	0.5	0.1	0.5 U	0.5	0.11	0.1 U	0.5	0.1	0.1 U	0.5	0.1	0.1 U	0.5	0.1

TABLE L-1
GROUNDWATER ANALYTICAL RESULTS
BOEING ISAACSON-THOMPSON
REMEDIAL INVESTIGATION

Location:		IT-MW-13			IT-MW-13			IT-MW-14			IT-MW-14			IT-MW-14			IT-MW-14		
Laboratory Sample ID:	Preliminary	6689156/6689157/6689158/UY55H			6788027/6788028/6788029/VJ32L			UB08C/UB08H/UB09C/UB09H			6571467/6571468/UL18B			6697964/6697965/6697966/UZ66C			6788010/6788011/6788012/VJ03H		
Laboratory Data Package ID:	Cleanup	1316071/UY55			1335483/VJ32			UB08/UB09			1293989/UL18			1317686/UZ66			1335480/VJ03		
Sample Date:	Levels	6/14/2012			9/12/2012			12/13/2011			03/07/2012			6/21/2012			9/11/2012		
		Result	Reporting Limit	Detection Limit	Result	Reporting Limit	Detection Limit	Result	Reporting Limit	Detection Limit	Result	Reporting Limit	Detection Limit	Result	Reporting Limit	Detection Limit	Result	Reporting Limit	Detection Limit
1,2,4-Trichlorobenzene	1.13	0.1 U	0.5	0.1	0.1 U	0.5	0.1	0.5 U	0.5	0.11	0.1 U	0.5	0.1	0.1 U	0.5	0.1	0.1 U	0.5	0.1
1,1,1-Trichloroethane	46,000	0.1 U	0.5	0.1	0.1 U	0.5	0.1	0.2 U	0.2	0.04	0.1 U	0.5	0.1	0.1 U	0.5	0.1	0.1 U	0.5	0.1
1,1,2-Trichloroethane	2.3	0.1 U	0.2	0.1	0.1 U	0.2	0.1	0.2 U	0.2	0.13	0.1 U	0.2	0.1	0.1 U	0.2	0.1	0.1 U	0.2	0.1
Trichloroethene	1.4	0.1 U	0.2	0.1	0.1 U	0.2	0.1	0.2 U	0.2	0.05	0.1 U	0.2	0.1	0.1 U	0.2	0.1	0.1 U	0.2	0.1
Trichlorofluoromethane	6900	0.1 U	0.5	0.1	0.1 U	0.5	0.1	0.2 U	0.2	0.04	0.1 U	0.5	0.1	0.1 U	0.5	0.1	0.1 U	0.5	0.1
1,2,3-Trichloropropane	---	0.3 U	1.0	0.3	0.3 U	1.0	0.3	0.5 U	0.5	0.13	0.3 U	1.0	0.3	0.3 U	1.0	0.3	0.3 U	1.0	0.3
1,2,4-Trimethylbenzene	303	0.1 U	0.5	0.1	0.1 U	0.5	0.1	0.2 U	0.2	0.02	0.1 U	0.5	0.1	0.1 U	0.5	0.1	0.1 U	0.5	0.1
1,3,5-Trimethylbenzene	303	0.1 U	0.5	0.1	0.1 U	0.5	0.1	0.2 U	0.2	0.02	0.1 U	0.5	0.1	0.1 U	0.5	0.1	0.1 U	0.5	0.1
Vinyl Acetate	---	0.2 U	0.5	0.2	0.2 U	0.5	0.2	1.0 U	1.0	0.07	0.2 U	0.5	0.2	0.2 U	0.5	0.2	0.2 U	0.5	0.2
Vinyl Chloride	0.53	0.1 U	0.2	0.1	0.1 U	0.2	0.1	0.2 U	0.2	0.06	0.1 U	0.2	0.1	0.1 U	0.2	0.1	0.1 U	0.2	0.1
m,p-Xylene	1300	0.1 U	0.5	0.1	0.1 U	0.5	0.1	0.4 U	0.4	0.05	0.1 U	0.5	0.1	0.1 U	0.5	0.1	0.1 U	0.5	0.1
o-Xylene	1600	0.1 U	0.5	0.1	0.1 U	0.5	0.1	0.2 U	0.2	0.04	0.1 U	0.5	0.1	0.1 U	0.5	0.1	0.1 U	0.5	0.1
2-Chloroethylvinylether	---	NA	NA	NA	NA	NA	NA	1.0 U	1.0	0.25	NA	NA	NA	NA	NA	NA	NA	NA	NA
Bromoethane	---	NA	NA	NA	NA	NA	NA	0.2 U	0.2	0.04	NA	NA	NA	NA	NA	NA	NA	NA	NA
VOLATILES (µg/L)																			
Method SW8260C-SIM																			
Tetrachloroethene	3.3	0.010 U	0.020	0.010	0.010 U	0.020	0.010	0.020 U	0.020	0.0036	0.010 U	0.020	0.010	0.010 U	0.020	0.010	0.010 U	0.020	0.010
Vinyl Chloride	0.53	0.010 U	0.020	0.010	0.010 U	0.020	0.010	0.020 U	0.020	0.0022	0.010 U	0.020	0.010	0.010 U	0.020	0.010	0.010 U	0.020	0.010
Acrylonitrile	0.057	NA	NA	NA	NA	NA	NA	0.050 U	0.050	0.0158	NA	NA	NA	NA	NA	NA	NA	NA	NA
SEMIVOLATILES (µg/L)																			
Method SW8270D																			
Acenaphthene	120	0.1 U	0.5	0.1	0.1 U	0.5	0.1	1.0 U	1.0	0.55	0.1 U	0.5	0.1	0.1 U	0.5	0.1	0.1 U	0.5	0.1
Acenaphthylene	---	0.1 U	0.5	0.1	0.1 U	0.5	0.1	1.0 U	1.0	0.48	0.1 U	0.5	0.1	0.1 U	0.5	0.1	0.1 U	0.5	0.1
Anthracene	200	0.1 U	0.5	0.1	0.1 U	0.5	0.1	1.0 U	1.0	0.53	0.1 U	0.5	0.1	0.1 U	0.5	0.1	0.1 U	0.5	0.1
Benzo(a)anthracene	0.0018	0.1 U	0.5	0.1	0.1 U	0.5	0.1	1.0 U	1.0	0.52	0.1 U	0.5	0.1	0.1 U	0.5	0.1	0.1 U	0.5	0.1
Benzo(a)pyrene	0.00018	0.1 U	0.5	0.1	0.1 U	0.5	0.1	1.0 U	1.0	0.48	0.1 U	0.5	0.1	0.1 U	0.5	0.1	0.1 U	0.5	0.1
Benzo(b)fluoranthene	0.0018	0.1 U	0.5	0.1	0.1 U	0.5	0.1	NA	NA	NA	0.1 U	0.5	0.1	0.1 U	0.5	0.1	0.1 U	0.5	0.1
Benzo(g,h,i)perylene	---	0.1 U	0.5	0.1	0.1 U	0.5	0.1	1.0 U	1.0	0.55	0.1 U	0.5	0.1	0.1 U	0.5	0.1	0.1 U	0.5	0.1
Benzo(k)fluoranthene	0.0018	0.1 U	0.5	0.1	0.1 U	0.5	0.1	NA	NA	NA	0.1 U	0.5	0.1	0.1 U	0.5	0.1	0.1 U	0.5	0.1
Total Benzofluoranthenes	0.0018	NA	NA	NA	NA	NA	NA	1.0 U	1.0	0.48	NA	NA	NA	NA	NA	NA	NA	NA	NA
Benzoic Acid	2,240	6 U	15	6	6 U	15	6	10 UJ	10	5.1	6 UJ	14	6	6 U	15	6	6 U	14	6
Benzyl Alcohol	182	5 U	15	5	5 U	15	5	5.0 U	5.0	2.0	5 U	14	5	5 U	15	5	5 U	14	5
4-Bromophenyl-phenylether	---	0.5 U	1	0.5	0.5 U	1	0.5	1.0 U	1.0	0.42	0.5 U	1	0.5	0.5 U	1	0.5	0.5 U	1	0.5
Butylbenzylphthalate	0.41	2 U	5	2	2 U	5	2	1.0 U	1.0	0.56	2 U	5	2	2 U	5	2	2 U	5	2
Di-n-Butylphthalate	47	2 U	5	2	2 U	5	2	1.0 U	1.0	0.54	2 U	5	2	2 U	5	2	2 U	5	2
Carbazole	---	0.5 U	1	0.5	0.5 U	1	0.5	1.0 U	1.0	0.31	0.5 U	1	0.5	0.5 U	1	0.5	0.5 U	1	0.5
4-Chloro-3-methylphenol	3700	0.5 U	1	0.5	0.5 U	1	0.5	5.0 U	5.0	2.4	0.5 U	1	0.5	0.5 U	1	0.5	0.5 U	1	0.5
4-Chloroaniline	---	0.5 U	1	0.5	0.5 U	1	0.5	5.0 U	5.0	2.6	0.5 U	1	0.5	0.5 U	1	0.5	0.5 U	1	0.5
bis(2-Chloroethoxy) Methane	---	0.5 U	1	0.5	0.5 U	1	0.5	1.0 U	1.0	0.56	0.5 U	1	0.5	0.5 U	1	0.5	0.5 U	1	0.5
Bis-(2-Chloroethyl) Ether	---	0.5 U	1	0.5	0.5 U	1	0.5	1.0 U	1.0	0.58	0.5 U	1	0.5	0.5 U	1	0.5	0.5 U	1	0.5
2-Chloronaphthalene	---	0.4 U	1	0.4	0.4 U	1	0.4	1.0 U	1.0	0.48	0.4 U	1	0.4	0.4 U	1	0.4	0.4 U	1	0.4
2-Chlorophenol	---	0.5 U	1	0.5	0.5 U	1	0.5	1.0 U	1.0	0.53	0.5 U	1	0.5	0.5 U	1	0.5	0.5 U	1	0.5
4-Chlorophenyl-phenylether	---	0.5 U	1	0.5	0.5 U	1	0.5	1.0 U	1.0	0.45	0.5 U	1	0.5	0.5 U	1	0.5	0.5 U	1	0.5
2,2'-Oxybis(1-Chloropropane)	---	0.5 U	1	0.5	0.5 U	1	0.5	1.0 U	1.0	0.62	0.5 U	1	0.5	0.5 U	1	0.5	0.5 U	1	0.5
Chrysene	0.018	0.1 U	0.5	0.1	0.1 U	0.5	0.1	1.0 U	1.0	0.55	0.1 U	0.5	0.1	**0.1** J1	0.5	0.1	0.1 U	0.5	0.1
Dibenz(a,h)anthracene	0.0018	0.1 U	0.5	0.1	0.1 U	0.5	0.1	1.0 U	1.0	0.48	0.1 U	0.5	0.1	0.1 U	0.5	0.1	0.1 U	0.5	0.1
Dibenzofuran	1.3	0.5 U	1	0.5	0.5 U	1	0.5	1.0 U	1.0	0.48	0.5 U	1	0.5	0.5 U	1	0.5	0.5 U	1	0.5
1,2-Dichlorobenzene	440	0.5 U	1	0.5	0.5 U	1	0.5	1.0 U	1.0	0.36	0.5 U	1	0.5	0.5 U	1	0.5	0.5 U	1	0.5
1,3-Dichlorobenzene	---	0.5 U	1	0.5	0.5 U	1	0.5	1.0 U	1.0	0.36	0.5 U	1	0.5	0.5 U	1	0.5	0.5 U	1	0.5
1,4-Dichlorobenzene	1.7	0.5 U	1	0.5	0.5 U	1	0.5	1.0 U	1.0	0.40	0.5 U	1	0.5	0.5 U	1	0.5	0.5 U	1	0.5
3,3'-Dichlorobenzidine	---	2 U	5	2	2 U	5	2	5.0 U	5.0	1.5	2 U	5	2	2 U	5	2	2 U	5	2
2,4-Dichlorophenol	---	0.5 U	1	0.5	0.5 U	1	0.5	5.0 U	5.0	2.6	0.5 U	1	0.5	0.5 U	1	0.5	**0.9** J1	1	0.5
Diethylphthalate	4,236	2 U	5	2	2 U	5	2	1.0 U	1.0	0.58	2 U	5	2	2 U	5	2	2 U	5	2
2,4-Dimethylphenol	660	0.5 U	1	0.5	0.5 U	1	0.5	1.0 U	1.0	0.36	0.5 U	1	0.5	0.5 U	1	0.5	0.5 U	1	0.5
Dimethylphthalate	1,100,000	2 U	5	2	2 U	5	2	1.0 U	1.0	0.53	2 U	5	2	2 U	5	2	2 U	5	2
4,6-Dinitro-2-Methylphenol	---	5 U	15	5	5 U	15	5	10 U	10	3.1	5 U	14	5	5 U	15	5	5 U	14	5
2,4-Dinitrophenol	---	10 U	30	10	10 U	29	10	10 UJ	10	3.5	10 U	29	10	10 U	30	10	10 U	29	10
2,4-Dinitrotoluene	---	1 U	5	1	1 U	5	1	5.0 U	5.0	2.5	1 U	5	1	1 U	5	1	1 U	5	1
2,6-Dinitrotoluene	---	0.5 U	1	0.5	0.5 U	1	0.5	5.0 U	5.0	2.4	0.5 U	1	0.5	0.5 U	1	0.5	0.5 U	1	0.5
bis(2-Ethylhexyl)phthalate	1.2	2 U	5	2	2 U	5	2	1.0 U	1.0	1.9	2 U	5	2	2 U	5	2	2 U	5	2

TABLE L-1
GROUNDWATER ANALYTICAL RESULTS
BOEING ISAACSON-THOMPSON
REMEDIAL INVESTIGATION

Location:		IT-MW-13			IT-MW-13			IT-MW-14			IT-MW-14			IT-MW-14			IT-MW-14		
Laboratory Sample ID:	Preliminary	6689156/6689157/6689158/UY55H			6788027/6788028/6788029/VJ32L			UB08C/UB08H/UB09C/UB09H			6571467/6571468/UL18B			6697964/6697965/6697966/UZ66C			6788010/6788011/6788012/VJ03H		
Laboratory Data Package ID:	Cleanup	1316071/UY55			1335483/VJ32			UB08/UB09			1293989/UL18			1317686/UZ66			1335480/VJ03		
Sample Date:	Levels	6/14/2012			9/12/2012			12/13/2011			03/07/2012			6/21/2012			9/11/2012		
		Result	Reporting Limit	Detection Limit	Result	Reporting Limit	Detection Limit	Result	Reporting Limit	Detection Limit	Result	Reporting Limit	Detection Limit	Result	Reporting Limit	Detection Limit	Result	Reporting Limit	Detection Limit
Fluoranthene	11	0.1 U	0.5	0.1	0.1 U	0.5	0.1	1.0 U	1.0	0.52	0.1 U	0.5	0.1	0.1 U	0.5	0.1	0.1 U	0.5	0.1
Fluorene	45	0.1 U	0.5	0.1	0.1 U	0.5	0.1	1.0 U	1.0	0.56	0.1 U	0.5	0.1	0.1 U	0.5	0.1	0.1 U	0.5	0.1
Hexachlorobenzene	---	0.1 U	0.5	0.1	0.1 U	0.5	0.1	1.0 U	1.0	0.47	0.1 U	0.5	0.1	0.1 U	0.5	0.1	0.1 U	0.5	0.1
Hexachlorobutadiene	---	0.5 U	1	0.5	0.5 U	1	0.5	1.0 U	1.0	0.31	0.5 U	1	0.5	0.5 U	1	0.5	0.5 U	1	0.5
Hexachlorocyclopentadiene	---	5 U	15	5	5 U	15	5	5.0 U	5.0	1.2	5 U	14	5	5 U	15	5	5 U	14	5
Hexachloroethane	---	1 U	5	1	1 U	5	1	1.0 U	1.0	0.35	1 U	5	1	1 U	5	1	1 U	5	1
Indeno(1,2,3-cd)pyrene	0.0018	0.1 U	0.5	0.1	0.1 U	0.5	0.1	1.0 U	1.0	0.48	0.1 U	0.5	0.1	0.1 U	0.5	0.1	0.1 U	0.5	0.1
Isophorone	---	0.5 U	1	0.5	0.5 U	1	0.5	1.0 U	1.0	0.48	0.5 U	1	0.5	0.5 U	1	0.5	0.5 U	1	0.5
1-Methylnaphthalene	2.3	0.1 U	0.5	0.1	0.1 U	0.5	0.1	1.0 U	1.0	0.48	0.1 U	0.5	0.1	0.1 U	0.5	0.1	0.1 U	0.5	0.1
2-Methylnaphthalene	64	0.1 U	0.5	0.1	0.1 U	0.5	0.1	1.0 U	1.0	0.48	0.1 U	0.5	0.1	0.1 U	0.5	0.1	0.1 U	0.5	0.1
2-Methylphenol	3100	0.5 U	1	0.5	0.5 U	1	0.5	1.0 U	1.0	0.53	0.5 U	1	0.5	0.5 U	1	0.5	0.5 U	1	0.5
4-Methylphenol	330	0.5 U	1	0.5	0.5 U	1	0.5	1.0 U	1.0	0.52	0.5 U	1	0.5	0.5 U	1	0.5	0.5 U	1	0.5
Naphthalene	26	0.1 U	0.5	0.1	0.1 U	0.5	0.1	1.0 U	1.0	0.52	0.1 U	0.5	0.1	0.1 U	0.5	0.1	**0.1** J1	0.5	0.1
2-Nitroaniline	---	0.5 U	1	0.5	0.5 U	1	0.5	5.0 U	5.0	2.6	0.5 U	1	0.5	0.5 U	1	0.5	0.5 U	1	0.5
3-Nitroaniline	---	0.5 U	1	0.5	0.5 U	1	0.5	5.0 U	5.0	2.3	0.5 U	1	0.5	0.5 U	1	0.5	0.5 U	1	0.5
4-Nitroaniline	---	0.5 U	1	0.5	0.5 U	1	0.5	5.0 U	5.0	2.2	0.5 U	1	0.5	0.5 U	1	0.5	0.5 U	1	0.5
Nitrobenzene	---	0.5 U	1	0.5	0.5 U	1	0.5	1.0 U	1.0	0.58	0.5 U	1	0.5	0.5 U	1	0.5	0.5 U	1	0.5
2-Nitrophenol	---	0.5 U	1	0.5	0.5 U	1	0.5	5.0 U	5.0	2.0	0.5 U	1	0.5	0.5 U	1	0.5	0.5 U	1	0.5
4-Nitrophenol	---	10 U	30	10	10 U	29	10	5.0 U	5.0	2.6	10 U	29	10	10 U	30	10	10 U	29	10
N-Nitroso-Di-N-Propylamine	---	0.5 U	1	0.5	0.5 U	1	0.5	1.0 U	1.0	0.56	0.5 U	1	0.5	0.5 U	1	0.5	0.5 U	1	0.5
N-Nitrosodiphenylamine	1.96	0.5 U	1	0.5	0.5 U	1	0.5	1.0 U	1.0	0.46	0.5 U	1	0.5	0.5 U	1	0.5	0.5 U	1	0.5
Di-n-Octyl phthalate	---	2 U	5	2	2 U	5	2	1.0 U	1.0	0.51	2 U	5	2	2 U	5	2	2 U	5	2
Pentachlorophenol	---	1 U	5	1	1 U	5	1	5.0 UJ	5.0	2.4	1 U	5	1	1 U	5	1	1 U	5	1
Phenanthrene	---	0.1 U	0.5	0.1	0.1 U	0.5	0.1	1.0 U	1.0	0.56	0.1 U	0.5	0.1	0.1 U	0.5	0.1	0.1 U	0.5	0.1
Phenol	41,000	0.5 U	1	0.5	0.5 U	1	0.5	1.0 U	1.0	0.52	0.5 U	1	0.5	0.5 U	1	0.5	0.5 U	1	0.5
Pyrene	9.8	0.1 U	0.5	0.1	0.1 U	0.5	0.1	1.0 U	1.0	0.55	0.1 U	0.5	0.1	0.1 U	0.5	0.1	0.1 U	0.5	0.1
1,2,4-Trichlorobenzene	1.13	0.5 U	1	0.5	0.5 U	1	0.5	1.0 U	1.0	0.38	0.5 U	1	0.5	0.5 U	1	0.5	0.5 U	1	0.5
2,4,5-Trichlorophenol	---	0.5 U	1	0.5	0.5 U	1	0.5	5.0 U	5.0	2.2	0.5 U	1	0.5	0.5 U	1	0.5	0.5 U	1	0.5
2,4,6-Trichlorophenol	---	0.5 U	1	0.5	0.5 U	1	0.5	5.0 U	5.0	2.4	0.5 U	1	0.5	0.5 U	1	0.5	0.5 U	1	0.5
cPAHs (µg/L)																			
Method SW8270D-SIM																			
Benzo(a)anthracene	0.0018	0.0053 U	0.011	0.0053	0.0048 U	0.0097	0.0048	0.010 U	0.010	0.0063	0.0047 U	0.0095	0.0047	0.0050 U	0.0099	0.0050	0.0047 U	0.0094	0.0047
Benzo(a)pyrene	0.00018	0.0053 U	0.011	0.0053	0.0048 U	0.0097	0.0048	0.010 U	0.010	0.0048	0.0047 U	0.0095	0.0047	0.0050 U	0.0099	0.0050	0.0047 U	0.0094	0.0047
Benzo(b)fluoranthene	0.0018	0.0053 U	0.011	0.0053	0.0048 U	0.0097	0.0048	NA	NA	NA	0.0047 U	0.0095	0.0047	0.0050 U	0.0099	0.0050	0.0047 U	0.0094	0.0047
Benzo(k)fluoranthene	0.0018	0.0053 U	0.011	0.0053	0.0048 U	0.0097	0.0048	NA	NA	NA	0.0047 U	0.0095	0.0047	0.0050 U	0.0099	0.0050	0.0047 U	0.0094	0.0047
Total Benzofluoranthenes	0.0018	NA	NA	NA	NA	NA	NA	0.020 U	0.020	0.0099	NA	NA	NA	NA	NA	NA	NA	NA	NA
Chrysene	0.018	0.0053 U	0.011	0.0053	0.0048 U	0.0097	0.0048	0.010 U	0.010	0.0046	0.0047 U	0.0095	0.0047	0.0050 U	0.0099	0.0050	0.0047 U	0.0094	0.0047
Dibenz(a,h)anthracene	0.0018	0.0042 U	0.011	0.0042	0.0039 U	0.0097	0.0039	0.010 U	0.010	0.0048	0.0038 U	0.0095	0.0038	0.0040 U	0.0099	0.0040	0.0038 U	0.0094	0.0038
Indeno(1,2,3-cd)pyrene	0.0018	0.0042 U	0.011	0.0042	0.0039 U	0.0097	0.0039	0.010 U	0.010	0.0046	0.0038 U	0.0095	0.0038	0.0040 U	0.0099	0.0040	0.0038 U	0.0094	0.0038
Pyrene	9.8	0.011 U	0.053	0.011	0.0097 U	0.048	0.0097	NA	NA	NA	0.0095 U	0.047	0.0095	0.0099 U	0.049	0.0099	0.0094 U	0.047	0.0094
cPAH TEQ	0.00018	ND	NA	NA	ND	NA	NA	ND	NA	NA	ND	NA	NA	ND	NA	NA	ND	NA	NA
PCBs (µg/L)																			
Method SW8082																			
Aroclor 1016	0.000023	0.0057 U	0.0095	0.0057	0.0058 U	0.0097	0.0058	0.010 U	0.010	0.0025	0.0057 U	0.0095	0.0057	0.0057 U	0.0095	0.0057	0.0059 U	0.0098	0.0059
Aroclor 1221	---	0.0057 U	0.0095	0.0057	0.0058 U	0.0097	0.0058	0.010 U	0.010	0.0028	0.0057 U	0.0095	0.0057	0.0057 U	0.0095	0.0057	0.0059 U	0.0098	0.0059
Aroclor 1232	---	0.0066 U	0.0095	0.0066	0.0068 U	0.0097	0.0068	0.010 U	0.010	0.0028	0.0067 U	0.0095	0.0067	0.0067 U	0.0095	0.0067	0.0068 U	0.0098	0.0068
Aroclor 1242	0.000023	0.0057 U	0.0095	0.0057	0.0058 U	0.0097	0.0058	0.010 U	0.010	0.0028	0.0057 U	0.0095	0.0057	0.0057 U	0.0095	0.0057	0.0059 U	0.0098	0.0059
Aroclor 1248	0.000023	0.0047 U	0.0095	0.0047	0.0048 U	0.0097	0.0048	0.010 U	0.010	0.0028	0.0048 U	0.0095	0.0048	0.0048 U	0.0095	0.0048	0.0049 U	0.0098	0.0049
Aroclor 1254	0.0000055	**0.014**	0.0095	0.0047	**0.011**	0.0097	0.0048	0.010 U	0.010	0.0028	0.0048 U	0.0095	0.0048	0.0048 U	0.0095	0.0048	0.0049 U	0.0098	0.0049
Aroclor 1260	0.000023	0.0047 U	0.0095	0.0047	0.0048 U	0.0097	0.0048	0.010 U	0.010	0.0028	0.0048 U	0.0095	0.0048	0.0048 U	0.0095	0.0048	0.0049 U	0.0098	0.0049
Total PCBs	0.000023	**0.014**	NA	NA	**0.011**	NA	NA	ND	NA	NA	ND	NA	NA	ND	NA	NA	ND	NA	NA

TABLE L-1
GROUNDWATER ANALYTICAL RESULTS
BOEING ISAACSON-THOMPSON
REMEDIAL INVESTIGATION

Location:		IT-MW-13			IT-MW-13			IT-MW-14			IT-MW-14			IT-MW-14			IT-MW-14		
Laboratory Sample ID:	Preliminary	6689156/6689157/6689158/UY55H			6788027/6788028/6788029/VJ32L			UB08C/UB08H/UB09C/UB09H			6571467/6571468/UL18B			6697964/6697965/6697966/UZ66C			6788010/6788011/6788012/VJ03H		
Laboratory Data Package ID:	Cleanup	1316071/UY55			1335483/VJ32			UB08/UB09			1293989/UL18			1317686/UZ66			1335480/VJ03		
Sample Date:	Levels	6/14/2012			9/12/2012			12/13/2011			03/07/2012			6/21/2012			9/11/2012		
		Result	Reporting Limit	Detection Limit	Result	Reporting Limit	Detection Limit	Result	Reporting Limit	Detection Limit	Result	Reporting Limit	Detection Limit	Result	Reporting Limit	Detection Limit	Result	Reporting Limit	Detection Limit
TOTAL PETROLEUM HYDROCARBONS (mg/L)																			
NWTPH-Dx																			
Diesel-Range Organics	0.5	0.029 U	0.097	0.029	0.029 U	0.097	0.029	0.10 U	0.10	0.022	0.067 U	0.24	0.067	0.029 U	0.097	0.029	0.028 U	0.094	0.028
Oil-Range Organics	0.5	0.068 U	0.240	0.068	0.068 U	0.240	0.068	0.20 U	0.20	0.044	0.95 U	2.9	0.95	0.068 U	0.240	0.068	0.066 U	0.240	0.066
NWTPH-G																			
Gasoline-Range Organics	1.0/0.8	0.05 U	0.25	0.05	0.05 U	0.25	0.05	0.25 U	0.25	0.06	0.05 U	0.25	0.05	0.05 U	0.25	0.05	0.05 U	0.25	0.05
TOTAL METALS (µg/L)																			
Method 200.8																			
Antimony	---	**0.21** J1	1.0	0.10	0.33 U	1.0	0.33	**1.1**	0.2	0.010	**1.1**	1.0	0.42	**0.49** J1	1.0	0.33	**0.85** J1	1.0	0.33
Arsenic	---	**10.2**	2.0	0.20	**12.4**	2.0	0.40	**5.3**	0.2	0.048	**4.2**	2.0	0.95	**4.8**	2.0	0.20	**15.3**	2.0	0.40
Barium	---	**13.8**	2.0	0.41	**14.2**	2.0	0.41	**9.5**	0.5	0.020	**10.6**	2.0	0.69	**21.3**	2.0	0.41	**22.1**	2.0	0.41
Beryllium	---	0.025 U	0.50	0.025	0.025 U	0.50	0.025	0.2 U	0.2	0.021	0.13 U	0.50	0.13	0.025 U	0.50	0.025	0.025 U	0.50	0.025
Cadmium	---	0.048 U	0.50	0.048	0.082 U	0.50	0.082	**0.4**	0.1	0.010	**0.44** J1	0.50	0.20	**0.20** J1	0.50	0.048	**0.31** J1	0.50	0.082
Chromium	---	**1.6** J1	2.0	0.10	**1.3** J1	2.0	0.50	1 U	1	0.11	**1.2** J1	2.0	0.60	**0.72** J1	2.0	0.50	**0.65** J1	2.0	0.50
Copper	---	**5.1**	2.0	0.15	**2.6**	2.0	0.40	**1.7**	0.5	0.158	**2.1**	2.0	0.38	**1.2** J1	2.0	0.15	**0.81** J1	2.0	0.40
Lead	---	**0.35** J1	1.0	0.034	0.034 U	1.0	0.034	**0.1**	0.1	0.046	0.080 U	1.0	0.080	0.034 U	1.0	0.034	**0.052** J1	1.0	0.034
Nickel	---	**8.5**	2.0	0.13	**7.2**	2.0	0.35	**3.6**	0.5	0.079	**2.2**	2.0	0.50	**1.6** J1	2.0	0.13	**2.4**	2.0	0.35
Selenium	---	**0.76** J1	2.0	0.18	**0.62** J1	2.0	0.50	0.5 U	0.5	0.127	0.27 U	2.0	0.27	**0.19** J1	2.0	0.18	0.50 UJ	2.0	0.50
Silver	---	0.046 U	0.50	0.046	0.10 U	0.50	0.10	0.2 U	0.2	0.008	0.098 U	0.50	0.098	0.10 U	0.50	0.10	0.10 U	0.50	0.10
Thallium	---	0.029 U	0.50	0.029	0.15 U	0.50	0.15	0.2 U	0.2	0.004	0.15 U	0.50	0.15	0.029 U	0.50	0.029	0.15 U	0.50	0.15
Zinc	---	**5.8** J1	15.0	1.1	2.5 UJ2	15.0	1.1	**22**	4	0.50	**18.2**	15.0	4.0	**24.5**	15.0	1.1	**34.5**	15.0	1.1
Method SW7196A (mg/L)																			
Chromium VI	0.00058	0.010 U	0.010	0.00300	0.010 U	0.010	0.00300	0.010 U	0.010	0.00300	0.010 U	0.010	0.00300	0.010 U	0.010	0.00300	0.010 U	0.010	0.00300
Method SW7470A/EPA 1631E (ng/L)																			
Mercury	12	**4.48** J1	10.0	3.2	**4.00** J1	10.0	3.20	20.0 U	20.0	2.60	**2.33**	5.00	1.60	**2.83** J1	5.00	1.60	1.60 U	5.00	1.60
DISSOLVED METALS (µg/L)																			
Methods 200.8/SW7196A																			
Antimony	150	**0.33** J1	1.0	0.10	0.33 U	1.0	0.33	**1.1**	0.2	0.010	**0.92** J1	1.0	0.42	**0.44** J1	1.0	0.33	**0.77** J1	1.0	0.33
Arsenic	8	**10**	2.0	0.20	**11.7**	2.0	0.40	**5.2**	0.2	0.048	**4.4**	2.0	0.95	**5.6**	2.0	0.20	**6.7**	2.0	0.40
Barium	770	**15.1**	2.0	0.41	**16.0**	2.0	0.41	**9.4**	0.5	0.020	**10.8**	2.0	0.69	**19.5**	2.0	0.41	**22.1**	2.0	0.41
Beryllium	12	0.025 U	0.50	0.025	**0.029** J1	0.50	0.025	0.2 U	0.2	0.021	0.13 U	0.50	0.13	0.025 U	0.50	0.025	0.025 U	0.50	0.025
Cadmium	0.25	0.048 U	0.50	0.048	0.082 U	0.50	0.082	**0.4**	0.1	0.010	**0.34** J1	0.50	0.20	**0.24** J1	0.50	0.048	**0.36** J1	0.50	0.082
Chromium	74	**1.3** J1	2.0	0.10	**1.4** J1	2.0	0.50	**0.6**	0.5	0.045	**1.0** J1	2.0	0.60	**0.64** J1	2.0	0.50	**0.76** J1	2.0	0.50
Copper	8	**4.9**	2.0	0.15	**3.0**	2.0	0.40	**1.8**	0.5	0.158	**1.9** J1	2.0	0.38	**1.9** J1	2.0	0.15	**0.76** J1	2.0	0.40
Lead	2.5	**0.045** J1	1.0	0.034	0.034 U	1.0	0.034	0.1 U	0.1	0.046	0.080 U	1.0	0.080	0.034 U	1.0	0.034	**0.089** J1	1.0	0.034
Nickel	8.2	**7.4**	2.0	0.13	**7.7**	2.0	0.35	**3.6**	0.5	0.079	**2.1**	2.0	0.50	**1.9** J1	2.0	0.13	**2.0** J1	2.0	0.35
Selenium	5	**0.80** J1	2.0	0.18	**0.83** J1	2.0	0.50	0.5 U	0.5	0.127	0.27 U	2.0	0.27	0.18 U	2.0	0.18	0.50 UJ	2.0	0.50
Silver	22	0.046 U	0.50	0.046	0.1 U	0.50	0.10	0.2 U	0.2	0.008	0.098 U	0.50	0.098	0.10 U	0.50	0.10	0.10 U	0.50	0.10
Thallium	0.47	0.029 U	0.50	0.029	0.15 U	0.50	0.15	0.2 U	0.2	0.004	0.15 U	0.50	0.15	0.029 U	0.50	0.029	0.15 U	0.50	0.15
Zinc	56	**5.0** J1	15.0	1.1	2.3 UJ2	15.0	1.1	**22**	4	0.50	**17.9**	15.0	4.0	**29.3**	15.0	1.1	**31.4**	15.0	1.1
Method SW7470A/EPA 1631E (ng/L)																			
Mercury	12	**7.18** J1	10.0	3.2	**4.02** J1	10.0	3.20	20.0 U	20.0	2.60	**3.25** J1	5.00	1.60	**3.80** J1	5.00	1.60	**4.42** J1	5.00	1.60
CONVENTIONALS (mg/L)																			
Chloride (Method 300.0)	---	**19.2**	4.0	2.0	**26.6**	2.0	1.0	NA	NA	NA	NA	NA	NA	**3.8**	0.40	0.20	**3.9**	0.40	0.20
Nitrate (Method 300.0)	---	0.050 U	0.10	0.050	0.050 U	0.10	0.050	**0.2**	0.1	0.007	**1.4**	0.10	0.050	0.050 U	0.10	0.050	0.050 U	0.10	0.050
Sulfate (Method 300.0)	---	72.6	10.0	3.0	**63.9**	5.0	1.5	**12.2**	0.5	0.295	**17.8**	5.0	1.5	**42.9**	5.0	1.5	**68.9**	10.0	3.0
Total Dissolved Solids (Method 160.1)	---	704	60.0	19.4	**638**	60.0	19.4	**281**	5.0	5.00	**345**	30.0	9.7	**425**	30.0	9.7	**435**	30.0	9.7
FIELD PARAMETERS																			
Temperature (°C)	---	15.07	NA	NA	16.77	NA	NA	15.72	NA	NA	13.73	NA	NA	14.41	NA	NA	14.89	NA	NA
Conductivity (uS/cm)	---	716	NA	NA	1020	NA	NA	876	NA	NA	314	NA	NA	569	NA	NA	720	NA	NA
Dissolved Oxygen (mg/L)	---	0.52	NA	NA	1.13	NA	NA	1.23	NA	NA	1.07	NA	NA	0.35	NA	NA	1.15	NA	NA
pH (SU)	---	6.29	NA	NA	6.85	NA	NA	6.68	NA	NA	7.53	NA	NA	7.52	NA	NA	6.39	NA	NA
ORP (mV)	---	14.5	NA	NA	-44	NA	NA	32.5	NA	NA	-8.1	NA	NA	46.7	NA	NA	-3	NA	NA
Turbidity (NTU)	---	106.44	NA	NA	6.65	NA	NA	2.53	NA	NA	3.2	NA	NA	10.95	NA	NA	6.61	NA	NA
Ferrous Iron (mg/L)	---	2.2	NA	NA	2.8	NA	NA	NA	NA	NA	0.1	NA	NA	0.1	NA	NA	1.8	NA	NA

TABLE L-1
GROUNDWATER ANALYTICAL RESULTS
BOEING ISAACSON-THOMPSON
REMEDIAL INVESTIGATION

Location:		IT-MW-15			IT-MW-15			IT-MW-15			IT-MW-15			IT-MW-16			IT-MW-16		
Laboratory Sample ID:	Preliminary	UB28A/UB28G/UB29A/UB29F			6568990/6568991/UK92B			6686966/6686967/6686968/UY34D			6787998/6787999/6788000/VJ03D			UB08A/UB08F/UB09A/UB09F			6571471/6571472/UL18D		
Laboratory Data Package ID:	Cleanup	UB28/UB29			1293530/UK92			1315688/UY34			1335480/VJ03			UB08/UB09			1293989/UL18		
Sample Date:	Levels	12/14/2011			03/06/2012			6/13/2012			9/11/2012			12/13/2011			03/07/2012		
		Result	Reporting Limit	Detection Limit	Result	Reporting Limit	Detection Limit	Result	Reporting Limit	Detection Limit	Result	Reporting Limit	Detection Limit	Result	Reporting Limit	Detection Limit	Result	Reporting Limit	Detection Limit
VOLATILES (µg/L)																			
Method SW8260C																			
Acetone	110,000	5.0 U	5.0	2.1	3.0 U	5.0	3.0	3.0 U	5.0	3.0	3.0 U	5.0	3.0	5.0 U	5.0	2.1	3.0 U	5.0	3.0
Acrolein	---	5.0 U	5.0	2.5	5.0 U	25	5.0	5.0 U	25	5.0	5.0 U	25	5.0	5.0 U	5.0	2.5	5.0 U	25	5.0
Acrylonitrile	0.057	1.0 U	1.0	0.60	1.0 U	5.0	1.0	1.0 U	5.0	1.0	1.0 U	5.0	1.0	1.0 U	1.0	0.60	1.0 U	5.0	1.0
Benzene	2	0.2 U	0.2	0.03	0.1 U	0.2	0.1	0.1 U	0.2	0.1	0.1 U	0.2	0.1	0.2 U	0.2	0.03	0.1 U	0.2	0.1
Bromobenzene	---	0.2 U	0.2	0.06	0.1 U	0.5	0.1	0.1 U	0.5	0.1	0.1 U	0.5	0.1	0.2 U	0.2	0.06	0.1 U	0.5	0.1
Bromochloromethane	---	0.2 U	0.2	0.06	0.1 U	0.5	0.1	0.1 U	0.5	0.1	0.1 U	0.5	0.1	0.2 U	0.2	0.06	0.1 U	0.5	0.1
Bromodichloromethane	17	0.2 U	0.2	0.05	0.1 U	0.5	0.1	0.1 U	0.5	0.1	0.1 U	0.5	0.1	0.2 U	0.2	0.05	0.1 U	0.5	0.1
Bromoform	---	0.2 UJ	0.2	0.06	0.1 U	0.5	0.1	0.1 U	0.5	0.1	0.1 U	0.5	0.1	0.2 UJ	0.2	0.06	0.1 U	0.5	0.1
Bromomethane	---	1.0 U	1.0	0.25	0.1 U	0.5	0.1	0.1 U	0.5	0.1	0.1 U	0.5	0.1	1.0 U	1.0	0.25	0.1 U	0.5	0.1
2-Butanone	73,000	5.0 U	5.0	0.81	1.0 U	5.0	1.0	1.0 U	5.0	1.0	1.0 U	5.0	1.0	5.0 U	5.0	0.81	1.0 U	5.0	1.0
n-Butylbenzene	780	0.2 U	0.2	0.02	0.1 U	0.5	0.1	0.1 U	0.5	0.1	0.1 U	0.5	0.1	0.2 U	0.2	0.02	0.1 U	0.5	0.1
sec-Butylbenzene	---	0.2 U	0.2	0.02	0.1 U	0.5	0.1	0.1 U	0.5	0.1	0.1 U	0.5	0.1	0.2 U	0.2	0.02	0.1 U	0.5	0.1
tert-Butylbenzene	---	0.2 U	0.2	0.03	0.1 U	0.5	0.1	0.1 U	0.5	0.1	0.1 U	0.5	0.1	0.2 U	0.2	0.03	0.1 U	0.5	0.1
Carbon Disulfide	3900	0.2 U	0.2	0.04	0.4 U	0.5	0.4	0.4 U	0.5	0.4	0.4 U	0.5	0.4	0.2 U	0.2	0.04	0.4 U	0.5	0.4
Carbon Tetrachloride	0.46	0.2 U	0.2	0.04	0.1 U	0.2	0.1	0.1 U	0.2	0.1	0.1 U	0.2	0.1	0.2 U	0.2	0.04	0.1 U	0.2	0.1
Chlorobenzene	270	0.2 U	0.2	0.02	0.1 U	0.5	0.1	0.1 U	0.5	0.1	0.1 U	0.5	0.1	0.2 U	0.2	0.02	0.1 U	0.5	0.1
Chloroethane	21,000	0.2 U	0.2	0.09	0.1 U	0.5	0.1	0.1 U	0.5	0.1	0.1 U	0.5	0.1	0.2 U	0.2	0.09	0.1 U	0.5	0.1
Chloroform	9.4	0.2 U	0.2	0.03	0.1 U	0.2	0.1	0.1 U	0.2	0.1	0.1 U	0.2	0.1	0.2 U	0.2	0.03	0.1 U	0.2	0.1
Chloromethane	10.3	0.5 U	0.5	0.10	0.2 U	0.5	0.2	0.2 U	0.5	0.2	0.2 U	0.5	0.2	0.5 U	0.5	0.10	0.2 U	0.5	0.2
2-Chlorotoluene	---	0.2 U	0.2	0.02	0.1 U	0.5	0.1	0.1 U	0.5	0.1	0.1 U	0.5	0.1	0.2 U	0.2	0.02	0.1 U	0.5	0.1
4-Chlorotoluene	2600	0.2 U	0.2	0.02	0.1 U	0.5	0.1	0.1 U	0.5	0.1	0.1 U	0.5	0.1	0.2 U	0.2	0.02	0.1 U	0.5	0.1
1,2-Dibromo-3-chloropropane	---	0.5 U	0.5	0.04	0.2 U	0.5	0.2	0.2 U	0.5	0.2	0.2 U	0.5	0.2	0.5 U	0.5	0.04	0.2 U	0.5	0.2
Dibromochloromethane	---	0.2 U	0.2	0.05	0.1 U	0.5	0.1	0.1 U	0.5	0.1	0.1 U	0.5	0.1	0.2 U	0.2	0.05	0.1 U	0.5	0.1
Dibromomethane	---	0.2 U	0.2	0.14	0.1 U	0.5	0.1	0.1 U	0.5	0.1	0.1 U	0.5	0.1	0.2 U	0.2	0.14	0.1 U	0.5	0.1
trans-1,4-Dichloro-2-butene	---	1.0 U	1.0	0.32	1.0 U	5.0	1.0	1.0 U	5.0	1.0	1.0 U	5.0	1.0	1.0 U	1.0	0.32	1.0 U	5.0	1.0
1,2-Dichlorobenzene	440	0.2 U	0.2	0.04	0.1 U	0.5	0.1	0.1 U	0.5	0.1	0.1 U	0.5	0.1	0.2 U	0.2	0.04	0.1 U	0.5	0.1
1,3-Dichlorobenzene	960	0.2 U	0.2	0.04	0.1 U	0.5	0.1	0.1 U	0.5	0.1	0.1 U	0.5	0.1	0.2 U	0.2	0.04	0.1 U	0.5	0.1
1,4-Dichlorobenzene	1.7	0.2 U	0.2	0.04	0.1 U	0.5	0.1	0.1 U	0.5	0.1	0.1 U	0.5	0.1	0.2 U	0.2	0.04	0.1 U	0.5	0.1
1,1-Dichloroethane	33	0.2 U	0.2	0.05	0.1 U	0.5	0.1	0.1 U	0.5	0.1	0.1 U	0.5	0.1	0.2 U	0.2	0.05	0.1 U	0.5	0.1
1,2-Dichloroethane	3.6	0.2 U	0.2	0.07	0.1 U	0.2	0.1	0.1 U	0.2	0.1	0.1 U	0.2	0.1	0.2 U	0.2	0.07	0.1 U	0.2	0.1
1,1-Dichloroethene	3.2	0.2 U	0.2	0.05	0.1 U	0.2	0.1	0.1 U	0.2	0.1	0.1 U	0.2	0.1	0.2 U	0.2	0.05	0.1 U	0.2	0.1
cis-1,2-Dichloroethene	130	0.2 U	0.2	0.04	0.1 U	0.2	0.1	0.1 U	0.2	0.1	0.1 U	0.2	0.1	**1.0**	0.2	0.04	**0.3**	0.2	0.1
trans-1,2-Dichloroethene	940	0.2 U	0.2	0.05	0.1 U	0.2	0.1	0.1 U	0.2	0.1	0.1 U	0.2	0.1	0.2 U	0.2	0.05	0.1 U	0.2	0.1
1,2-Dichloropropane	3.7	0.2 U	0.2	0.04	0.1 U	0.5	0.1	0.1 U	0.5	0.1	0.1 U	0.5	0.1	0.2 U	0.2	0.04	0.1 U	0.5	0.1
1,3-Dichloropropane	---	0.2 U	0.2	0.06	0.1 U	0.5	0.1	0.1 U	0.5	0.1	0.1 U	0.5	0.1	0.2 U	0.2	0.06	0.1 U	0.5	0.1
2,2-Dichloropropane	---	0.2 U	0.2	0.05	0.1 U	0.5	0.1	0.1 U	0.5	0.1	0.1 U	0.5	0.1	0.2 U	0.2	0.05	0.1 U	0.5	0.1
1,1-Dichloropropene	---	0.2 U	0.2	0.03	0.1 U	0.5	0.1	0.1 U	0.5	0.1	0.1 U	0.5	0.1	0.2 U	0.2	0.03	0.1 U	0.5	0.1
cis-1,3-Dichloropropene	---	0.2 U	0.2	0.06	0.1 U	0.2	0.1	0.1 U	0.2	0.1	0.1 U	0.2	0.1	0.2 U	0.2	0.06	0.1 U	0.2	0.1
trans-1,3-Dichloropropene	---	0.2 U	0.2	0.08	0.1 U	0.2	0.1	0.1 U	0.2	0.1	0.1 U	0.2	0.1	0.2 U	0.2	0.08	0.1 U	0.2	0.1
Ethylbenzene	1.7	0.2 U	0.2	0.04	0.1 U	0.5	0.1	0.1 U	0.5	0.1	0.1 U	0.5	0.1	0.2 U	0.2	0.04	0.1 U	0.5	0.1
Ethylene Dibromide	---	0.2 U	0.2	0.08	0.1 U	0.5	0.1	0.1 U	0.5	0.1	0.1 U	0.5	0.1	0.2 U	0.2	0.08	0.1 U	0.5	0.1
Hexachlorobutadiene	---	0.5 U	0.5	0.07	0.1 U	0.5	0.1	0.1 U	0.5	0.1	0.1 U	0.5	0.1	0.5 U	0.5	0.07	0.1 U	0.5	0.1
2-Hexanone	3200	5.0 U	5.0	0.90	1.0 U	5.0	1.0	1.0 U	5.0	1.0	1.0 U	5.0	1.0	5.0 U	5.0	0.90	1.0 U	5.0	1.0
Isopropylbenzene	270	0.2 U	0.2	0.02	0.1 U	0.5	0.1	0.1 U	0.5	0.1	0.1 U	0.5	0.1	0.2 U	0.2	0.02	0.1 U	0.5	0.1
4-Isopropyltoluene	---	0.2 U	0.2	0.03	0.1 U	0.5	0.1	0.1 U	0.5	0.1	0.1 U	0.5	0.1	0.2 U	0.2	0.03	0.1 U	0.5	0.1
Methyl Iodide	---	1.0 U	1.0	0.23	0.1 U	0.5	0.1	0.1 U	0.5	0.1	0.1 U	0.5	0.1	1.0 U	1.0	0.23	0.1 U	0.5	0.1
4-Methyl-2-Pentanone (MIBK)	19,000	5.0 U	5.0	0.97	1.0 U	5.0	1.0	1.0 U	5.0	1.0	1.0 U	5.0	1.0	5.0 U	5.0	0.97	1.0 U	5.0	1.0
Methylene Chloride	230	0.5 U	0.5	0.48	0.2 U	0.5	0.2	0.2 U	0.5	0.2	0.2 U	0.5	0.2	0.5 U	0.5	0.48	0.2 U	0.5	0.2
Naphthalene	26	0.5 U	0.5	0.12	0.1 U	0.5	0.1	0.1 U	0.5	0.1	0.1 U	0.5	0.1	0.5 U	0.5	0.12	0.1 U	0.5	0.1
n-Propylbenzene	530	0.2 U	0.2	0.02	0.1 U	0.5	0.1	0.1 U	0.5	0.1	0.1 U	0.5	0.1	0.2 U	0.2	0.02	0.1 U	0.5	0.1
Styrene	77,000	0.2 U	0.2	0.04	0.1 U	0.5	0.1	0.1 U	0.5	0.1	0.1 U	0.5	0.1	0.2 U	0.2	0.04	0.1 U	0.5	0.1
1,1,1,2-Tetrachloroethane	---	0.2 U	0.2	0.04	0.1 U	0.5	0.1	0.1 U	0.5	0.1	0.1 U	0.5	0.1	0.2 U	0.2	0.04	0.1 U	0.5	0.1
1,1,2,2-Tetrachloroethane	0.33	0.2 U	0.2	0.06	0.1 U	0.2	0.1	0.1 U	0.2	0.1	0.1 U	0.2	0.1	0.2 U	0.2	0.06	0.1 U	0.2	0.1
Tetrachloroethene	3.3	0.2 U	0.2	0.05	0.1 U	0.2	0.1	0.1 U	0.2	0.1	0.1 U	0.2	0.1	0.2 U	0.2	0.05	**0.2** J1	0.2	0.1
Toluene	1300	**0.1** J	0.2	0.04	0.1 U	0.2	0.1	0.1 U	0.2	0.1	0.1 U	0.2	0.1	0.2 U	0.2	0.04	0.1 U	0.2	0.1
1,1,2-Trichloro-1,2,2-trifuoroethane	59,000	0.2 U	0.2	0.04	0.2 U	0.5	0.2	0.2 U	0.5	0.2	0.2 U	0.5	0.2	0.2 U	0.2	0.04	0.2 U	0.5	0.2
1,2,3-Trichlorobenzene	---	0.5 U	0.5	0.11	0.1 U	0.5	0.1	0.1 U	0.5	0.1	0.1 U	0.5	0.1	0.5 U	0.5	0.11	0.1 U	0.5	0.1

TABLE L-1
GROUNDWATER ANALYTICAL RESULTS
BOEING ISAACSON-THOMPSON
REMEDIAL INVESTIGATION

Location:		IT-MW-15			IT-MW-15			IT-MW-15			IT-MW-15			IT-MW-16			IT-MW-16		
Laboratory Sample ID:	Preliminary	UB28A/UB28G/UB29A/UB29F			6568990/6568991/UK92B			6686966/6686967/6686968/UY34D			6787998/6787999/6788000/VJ03D			UB08A/UB08F/UB09A/UB09F			6571471/6571472/UL18D		
Laboratory Data Package ID:	Cleanup	UB28/UB29			1293530/UK92			1315688/UY34			1335480/VJ03			UB08/UB09			1293989/UL18		
Sample Date:	Levels	12/14/2011			03/06/2012			6/13/2012			9/11/2012			12/13/2011			03/07/2012		
		Result	Reporting Limit	Detection Limit	Result	Reporting Limit	Detection Limit	Result	Reporting Limit	Detection Limit	Result	Reporting Limit	Detection Limit	Result	Reporting Limit	Detection Limit	Result	Reporting Limit	Detection Limit
1,2,4-Trichlorobenzene	1.13	0.5 U	0.5	0.11	0.1 U	0.5	0.1	0.1 U	0.5	0.1	0.1 U	0.5	0.1	0.5 U	0.5	0.11	0.1 U	0.5	0.1
1,1,1-Trichloroethane	46,000	0.2 U	0.2	0.04	0.1 U	0.5	0.1	0.1 U	0.5	0.1	0.1 U	0.5	0.1	0.2 U	0.2	0.04	0.1 U	0.5	0.1
1,1,2-Trichloroethane	2.3	0.2 U	0.2	0.13	0.1 U	0.2	0.1	0.1 U	0.2	0.1	0.1 U	0.2	0.1	0.2 U	0.2	0.13	0.1 U	0.2	0.1
Trichloroethene	1.4	0.2 U	0.2	0.05	0.1 U	0.2	0.1	0.1 U	0.2	0.1	0.1 U	0.2	0.1	**0.2**	0.2	0.05	**0.2** J1	0.2	0.1
Trichlorofluoromethane	6900	0.2 U	0.2	0.04	0.1 U	0.5	0.1	0.1 U	0.5	0.1	0.1 U	0.5	0.1	0.2 U	0.2	0.04	0.1 U	0.5	0.1
1,2,3-Trichloropropane	---	0.5 U	0.5	0.13	0.3 U	1.0	0.3	0.3 U	1.0	0.3	0.3 U	1.0	0.3	0.5 U	0.5	0.13	0.3 U	1.0	0.3
1,2,4-Trimethylbenzene	303	0.2 U	0.2	0.02	0.1 U	0.5	0.1	0.1 U	0.5	0.1	0.1 U	0.5	0.1	0.2 U	0.2	0.02	0.1 U	0.5	0.1
1,3,5-Trimethylbenzene	303	0.2 U	0.2	0.02	0.1 U	0.5	0.1	0.1 U	0.5	0.1	0.1 U	0.5	0.1	0.2 U	0.2	0.02	0.1 U	0.5	0.1
Vinyl Acetate	---	1.0 U	1.0	0.07	0.2 U	0.5	0.2	0.2 U	0.5	0.2	0.2 U	0.5	0.2	1.0 U	1.0	0.07	0.2 U	0.5	0.2
Vinyl Chloride	0.53	0.2 U	0.2	0.06	0.1 U	0.2	0.1	0.1 U	0.2	0.1	0.1 U	0.2	0.1	**0.3**	0.2	0.06	0.1 U	0.2	0.1
m,p-Xylene	1300	0.4 U	0.4	0.05	0.1 U	0.5	0.1	0.1 U	0.5	0.1	0.1 U	0.5	0.1	0.4 U	0.4	0.05	0.1 U	0.5	0.1
o-Xylene	1600	**0.1** J	0.2	0.04	0.1 U	0.5	0.1	**0.1** J1	0.5	0.1	0.1 U	0.5	0.1	0.2 U	0.2	0.04	0.1 U	0.5	0.1
2-Chloroethylvinylether	---	1.0 U	1.0	0.25	NA	NA	NA	NA	NA	NA	NA	NA	NA	1.0 U	1.0	0.25	NA	NA	NA
Bromoethane	---	0.2 U	0.2	0.04	NA	NA	NA	NA	NA	NA	NA	NA	NA	0.2 U	0.2	0.04	NA	NA	NA
VOLATILES (µg/L)																			
Method SW8260C-SIM																			
Tetrachloroethene	3.3	0.020 U	0.020	0.0036	0.010 U	0.020	0.010	**0.013** J1	0.020	0.010	0.010 U	0.020	0.010	**0.20**	0.020	0.0036	**0.18**	0.020	0.010
Vinyl Chloride	0.53	0.020 U	0.020	0.0022	0.010 U	0.020	0.010	0.010 U	0.020	0.010	0.010 U	0.020	0.010	**0.25**	0.020	0.0022	**0.051**	0.020	0.010
Acrylonitrile	0.057	0.050 U	0.050	0.0158	NA	NA	NA	NA	NA	NA	NA	NA	NA	0.050 U	0.050	0.0158	NA	NA	NA
SEMIVOLATILES (µg/L)																			
Method SW8270D																			
Acenaphthene	120	1.0 U	1.0	0.55	0.1 U	0.5	0.1	0.1 U	0.5	0.1	0.1 U	0.5	0.1	1.0 U	1.0	0.55	0.1 U	0.5	0.1
Acenaphthylene	---	1.0 U	1.0	0.48	0.1 U	0.5	0.1	0.1 U	0.5	0.1	0.1 U	0.5	0.1	1.0 U	1.0	0.48	0.1 U	0.5	0.1
Anthracene	200	1.0 U	1.0	0.53	0.1 U	0.5	0.1	0.1 U	0.5	0.1	0.1 U	0.5	0.1	1.0 U	1.0	0.53	0.1 U	0.5	0.1
Benzo(a)anthracene	0.0018	1.0 U	1.0	0.52	0.1 U	0.5	0.1	0.1 U	0.5	0.1	0.1 U	0.5	0.1	1.0 U	1.0	0.52	0.1 U	0.5	0.1
Benzo(a)pyrene	0.00018	1.0 U	1.0	0.48	0.1 U	0.5	0.1	0.1 U	0.5	0.1	0.1 U	0.5	0.1	1.0 U	1.0	0.48	0.1 U	0.5	0.1
Benzo(b)fluoranthene	0.0018	NA	NA	NA	0.1 U	0.5	0.1	0.1 U	0.5	0.1	0.1 U	0.5	0.1	NA	NA	NA	0.1 U	0.5	0.1
Benzo(g,h,i)perylene	---	1.0 U	1.0	0.55	0.1 U	0.5	0.1	0.1 U	0.5	0.1	0.1 U	0.5	0.1	1.0 U	1.0	0.55	0.1 U	0.5	0.1
Benzo(k)fluoranthene	0.0018	NA	NA	NA	0.1 U	0.5	0.1	0.1 U	0.5	0.1	0.1 U	0.5	0.1	NA	NA	NA	0.1 U	0.5	0.1
Total Benzofluoranthenes	0.0018	1.0 U	1.0	0.48	NA	NA	NA	NA	NA	NA	NA	NA	NA	1.0 U	1.0	0.48	NA	NA	NA
Benzoic Acid	2,240	10 UJ	10	5.1	6 UJ	15	6	6 U	14	6	6 U	15	6	10 UJ	10	5.1	6 UJ	16	6
Benzyl Alcohol	182	5.0 U	5.0	2.0	5 U	15	5	5 U	14	5	5 U	15	5	5.0 U	5.0	2.0	5 U	16	5
4-Bromophenyl-phenylether	---	1.0 U	1.0	0.42	0.5 U	1	0.5	0.5 U	1	0.5	0.5 U	1	0.5	1.0 U	1.0	0.42	0.5 U	1	0.5
Butylbenzylphthalate	0.41	1.0 U	1.0	0.56	2 U	5	2	2 U	5	2	2 U	5	2	1.0 U	1.0	0.56	2 U	5	2
Di-n-Butylphthalate	47	1.0 U	1.0	0.54	2 U	5	2	2 U	5	2	2 U	5	2	1.0 U	1.0	0.54	2 U	5	2
Carbazole	---	1.0 U	1.0	0.31	0.5 U	1	0.5	0.5 U	1	0.5	0.5 U	1	0.5	1.0 U	1.0	0.31	0.5 U	1	0.5
4-Chloro-3-methylphenol	3700	5.0 U	5.0	2.4	0.5 U	1	0.5	0.5 U	1	0.5	0.5 U	1	0.5	5.0 U	5.0	2.4	0.5 U	1	0.5
4-Chloroaniline	---	5.0 U	5.0	2.6	0.5 U	1	0.5	0.5 U	1	0.5	0.5 U	1	0.5	5.0 U	5.0	2.6	0.5 U	1	0.5
bis(2-Chloroethoxy) Methane	---	1.0 U	1.0	0.56	0.5 U	1	0.5	0.5 U	1	0.5	0.5 U	1	0.5	1.0 U	1.0	0.56	0.5 U	1	0.5
Bis-(2-Chloroethyl) Ether	---	1.0 U	1.0	0.58	0.5 U	1	0.5	0.5 U	1	0.5	0.5 U	1	0.5	1.0 U	1.0	0.58	0.5 U	1	0.5
2-Chloronaphthalene	---	1.0 U	1.0	0.48	0.4 U	1	0.4	0.4 U	1	0.4	0.4 U	1	0.4	1.0 U	1.0	0.48	0.4 U	1	0.4
2-Chlorophenol	---	1.0 U	1.0	0.53	0.5 U	1	0.5	0.5 U	1	0.5	0.5 U	1	0.5	1.0 U	1.0	0.53	0.5 U	1	0.5
4-Chlorophenyl-phenylether	---	1.0 U	1.0	0.45	0.5 U	1	0.5	0.5 U	1	0.5	0.5 U	1	0.5	1.0 U	1.0	0.45	0.5 U	1	0.5
2,2'-Oxybis(1-Chloropropane)	---	1.0 U	1.0	0.62	0.5 U	1	0.5	0.5 U	1	0.5	0.5 U	1	0.5	1.0 U	1.0	0.62	0.5 U	1	0.5
Chrysene	0.018	1.0 U	1.0	0.55	0.1 U	0.5	0.1	0.1 U	0.5	0.1	0.1 U	0.5	0.1	1.0 U	1.0	0.55	0.1 U	0.5	0.1
Dibenz(a,h)anthracene	0.0018	1.0 U	1.0	0.48	0.1 U	0.5	0.1	0.1 U	0.5	0.1	0.1 U	0.5	0.1	1.0 U	1.0	0.48	0.1 U	0.5	0.1
Dibenzofuran	1.3	1.0 U	1.0	0.48	0.5 U	1	0.5	0.5 U	1	0.5	0.5 U	1	0.5	1.0 U	1.0	0.48	0.5 U	1	0.5
1,2-Dichlorobenzene	440	1.0 U	1.0	0.36	0.5 U	1	0.5	0.5 U	1	0.5	0.5 U	1	0.5	1.0 U	1.0	0.36	0.5 U	1	0.5
1,3-Dichlorobenzene	---	1.0 U	1.0	0.36	0.5 U	1	0.5	0.5 U	1	0.5	0.5 U	1	0.5	1.0 U	1.0	0.36	0.5 U	1	0.5
1,4-Dichlorobenzene	1.7	1.0 U	1.0	0.40	0.5 U	1	0.5	0.5 U	1	0.5	0.5 U	1	0.5	1.0 U	1.0	0.40	0.5 U	1	0.5
3,3'-Dichlorobenzidine	---	5.0 U	5.0	1.5	2 U	5	2	2 U	5	2	2 U	5	2	5.0 U	5.0	1.5	2 U	5	2
2,4-Dichlorophenol	---	5.0 U	5.0	2.6	0.5 U	1	0.5	0.5 U	1	0.5	0.5 U	1	0.5	5.0 U	5.0	2.6	0.5 U	1	0.5
Diethylphthalate	4,236	1.0 U	1.0	0.58	2 U	5	2	2 U	5	2	2 U	5	2	1.0 U	1.0	0.58	2 U	5	2
2,4-Dimethylphenol	660	1.0 U	1.0	0.36	0.5 U	1	0.5	0.5 U	1	0.5	0.5 U	1	0.5	1.0 U	1.0	0.36	0.5 U	1	0.5
Dimethylphthalate	1,100,000	1.0 U	1.0	0.53	2 U	5	2	2 U	5	2	2 U	5	2	1.0 U	1.0	0.53	2 U	5	2
4,6-Dinitro-2-Methylphenol	---	10 U	10	3.1	5 U	15	5	5 U	14	5	5 U	15	5	10 U	10	3.1	5 U	16	5
2,4-Dinitrophenol	---	10 UJ	10	3.5	10 U	30	10	10 U	29	10	10 U	30	10	10 UJ	10	3.5	10 U	29	10
2,4-Dinitrotoluene	---	5.0 U	5.0	2.5	1 U	5	1	1 U	5	1	1 U	5	1	5.0 U	5.0	2.5	1 U	5	1
2,6-Dinitrotoluene	---	5.0 U	5.0	2.4	0.5 U	1	0.5	0.5 U	1	0.5	0.5 U	1	0.5	5.0 U	5.0	2.4	0.5 U	1	0.5
bis(2-Ethylhexyl)phthalate	1.2	1.0 U	1.0	1.9	2 U	5	2	2 U	5	2	2 U	5	2	1.0 U	1.0	1.9	2 U	5	2

TABLE L-1
GROUNDWATER ANALYTICAL RESULTS
BOEING ISAACSON-THOMPSON
REMEDIAL INVESTIGATION

Location:		IT-MW-15			IT-MW-15			IT-MW-15			IT-MW-15			IT-MW-16			IT-MW-16		
Laboratory Sample ID:	Preliminary	UB28A/UB28G/UB29A/UB29F			6568990/6568991/UK92B			6686966/6686967/6686968/UY34D			6787998/6787999/6788000/VJ03D			UB08A/UB08F/UB09A/UB09F			6571471/6571472/UL18D		
Laboratory Data Package ID:	Cleanup	UB28/UB29			1293530/UK92			1315688/UY34			1335480/VJ03			UB08/UB09			1293989/UL18		
Sample Date:	Levels	12/14/2011			03/06/2012			6/13/2012			9/11/2012			12/13/2011			03/07/2012		
		Result	Reporting Limit	Detection Limit	Result	Reporting Limit	Detection Limit	Result	Reporting Limit	Detection Limit	Result	Reporting Limit	Detection Limit	Result	Reporting Limit	Detection Limit	Result	Reporting Limit	Detection Limit
Fluoranthene	11	1.0 U	1.0	0.52	0.1 U	0.5	0.1	0.1 U	0.5	0.1	0.1 U	0.5	0.1	1.0 U	1.0	0.52	0.1 U	0.5	0.1
Fluorene	45	1.0 U	1.0	0.56	0.1 U	0.5	0.1	0.1 U	0.5	0.1	0.1 U	0.5	0.1	1.0 U	1.0	0.56	0.1 U	0.5	0.1
Hexachlorobenzene	---	1.0 U	1.0	0.47	0.1 U	0.5	0.1	0.1 U	0.5	0.1	0.1 U	0.5	0.1	1.0 U	1.0	0.47	0.1 U	0.5	0.1
Hexachlorobutadiene	---	1.0 U	1.0	0.31	0.5 U	1	0.5	0.5 U	1	0.5	0.5 U	1	0.5	1.0 U	1.0	0.31	0.5 U	1	0.5
Hexachlorocyclopentadiene	---	5.0 U	5.0	1.2	5 U	15	5	5 U	14	5	5 U	15	5	5.0 U	5.0	1.2	5 U	16	5
Hexachloroethane	---	1.0 U	1.0	0.35	1 U	5	1	1 U	5	1	1 U	5	1	1.0 U	1.0	0.35	1 U	5	1
Indeno(1,2,3-cd)pyrene	0.0018	1.0 U	1.0	0.48	0.1 U	0.5	0.1	0.1 U	0.5	0.1	0.1 U	0.5	0.1	1.0 U	1.0	0.48	0.1 U	0.5	0.1
Isophorone	---	1.0 U	1.0	0.48	0.5 U	1	0.5	0.5 U	1	0.5	0.5 U	1	0.5	1.0 U	1.0	0.48	0.5 U	1	0.5
1-Methylnaphthalene	2.3	1.0 U	1.0	0.48	0.1 U	0.5	0.1	0.1 U	0.5	0.1	0.1 U	0.5	0.1	1.0 U	1.0	0.48	0.1 U	0.5	0.1
2-Methylnaphthalene	64	1.0 U	1.0	0.48	0.1 U	0.5	0.1	0.1 U	0.5	0.1	0.1 U	0.5	0.1	1.0 U	1.0	0.48	0.1 U	0.5	0.1
2-Methylphenol	3100	1.0 U	1.0	0.53	0.5 U	1	0.5	0.5 U	1	0.5	0.5 U	1	0.5	1.0 U	1.0	0.53	0.5 U	1	0.5
4-Methylphenol	330	1.0 U	1.0	0.52	0.5 U	1	0.5	0.5 U	1	0.5	0.5 U	1	0.5	1.0 U	1.0	0.52	0.5 U	1	0.5
Naphthalene	26	1.0 U	1.0	0.52	0.1 U	0.5	0.1	**0.1** J1	0.5	0.1	0.1 U	0.5	0.1	1.0 U	1.0	0.52	0.1 U	0.5	0.1
2-Nitroaniline	---	5.0 U	5.0	2.6	0.5 U	1	0.5	0.5 U	1	0.5	0.5 U	1	0.5	5.0 U	5.0	2.6	0.5 U	1	0.5
3-Nitroaniline	---	5.0 U	5.0	2.3	0.5 U	1	0.5	0.5 U	1	0.5	0.5 U	1	0.5	5.0 U	5.0	2.3	0.5 U	1	0.5
4-Nitroaniline	---	5.0 U	5.0	2.2	0.5 U	1	0.5	0.5 U	1	0.5	0.5 U	1	0.5	5.0 U	5.0	2.2	0.5 U	1	0.5
Nitrobenzene	---	1.0 U	1.0	0.58	0.5 U	1	0.5	0.5 U	1	0.5	0.5 U	1	0.5	1.0 U	1.0	0.58	0.5 U	1	0.5
2-Nitrophenol	---	5.0 U	5.0	2.0	0.5 U	1	0.5	0.5 U	1	0.5	0.5 U	1	0.5	5.0 U	5.0	2.0	0.5 U	1	0.5
4-Nitrophenol	---	5.0 U	5.0	2.6	10 U	30	10	10 U	29	10	10 U	30	10	5.0 U	5.0	2.6	10 U	29	10
N-Nitroso-Di-N-Propylamine	---	1.0 U	1.0	0.56	0.5 U	1	0.5	0.5 U	1	0.5	0.5 U	1	0.5	1.0 U	1.0	0.56	0.5 U	1	0.5
N-Nitrosodiphenylamine	1.96	1.0 U	1.0	0.46	0.5 U	1	0.5	0.5 U	1	0.5	0.5 U	1	0.5	1.0 U	1.0	0.46	0.5 U	1	0.5
Di-n-Octyl phthalate	---	1.0 U	1.0	0.51	2 U	5	2	2 U	5	2	2 U	5	2	1.0 U	1.0	0.51	2 U	5	2
Pentachlorophenol	---	5.0 U	5.0	2.4	1 U	5	1	1 U	5	1	1 U	5	1	5.0 UJ	5.0	2.4	1 U	5	1
Phenanthrene	---	1.0 U	1.0	0.56	0.1 U	0.5	0.1	0.1 U	0.5	0.1	0.1 U	0.5	0.1	1.0 U	1.0	0.56	0.1 U	0.5	0.1
Phenol	41,000	1.0 U	1.0	0.52	0.5 U	1	0.5	0.5 U	1	0.5	0.5 U	1	0.5	1.0 U	1.0	0.52	0.5 U	1	0.5
Pyrene	9.8	1.0 U	1.0	0.55	0.1 U	0.5	0.1	0.1 U	0.5	0.1	0.1 U	0.5	0.1	1.0 U	1.0	0.55	0.1 U	0.5	0.1
1,2,4-Trichlorobenzene	1.13	1.0 U	1.0	0.38	0.5 U	1	0.5	0.5 U	1	0.5	0.5 U	1	0.5	1.0 U	1.0	0.38	0.5 U	1	0.5
2,4,5-Trichlorophenol	---	5.0 U	5.0	2.2	0.5 U	1	0.5	0.5 U	1	0.5	0.5 U	1	0.5	5.0 U	5.0	2.2	0.5 U	1	0.5
2,4,6-Trichlorophenol	---	5.0 U	5.0	2.4	0.5 U	1	0.5	0.5 U	1	0.5	0.5 U	1	0.5	5.0 U	5.0	2.4	0.5 U	1	0.5
cPAHs (µg/L)																			
Method SW8270D-SIM																			
Benzo(a)anthracene	0.0018	0.010 U	0.010	0.0063	0.0053 U	0.011	0.0053	0.0048 U	0.0096	0.0048	0.0047 U	0.0094	0.0047	0.010 U	0.010	0.0063	0.0050 U	0.010	0.0050
Benzo(a)pyrene	0.00018	0.010 U	0.010	0.0048	0.0053 U	0.011	0.0053	0.0048 U	0.0096	0.0048	0.0047 U	0.0094	0.0047	0.010 U	0.010	0.0048	0.0050 U	0.010	0.0050
Benzo(b)fluoranthene	0.0018	NA	NA	NA	0.0053 U	0.011	0.0053	0.0048 U	0.0096	0.0048	0.0047 U	0.0094	0.0047	NA	NA	NA	0.0050 U	0.010	0.0050
Benzo(k)fluoranthene	0.0018	NA	NA	NA	0.0053 U	0.011	0.0053	0.0048 U	0.0096	0.0048	0.0047 U	0.0094	0.0047	NA	NA	NA	0.0050 U	0.010	0.0050
Total Benzofluoranthenes	0.0018	0.020 U	0.020	0.0099	NA	NA	NA	NA	NA	NA	NA	NA	NA	0.020 U	0.020	0.0099	NA	NA	NA
Chrysene	0.018	0.010 U	0.010	0.0046	0.0053 U	0.011	0.0053	0.0048 U	0.0096	0.0048	0.0047 U	0.0094	0.0047	0.010 U	0.010	0.0046	0.0050 U	0.010	0.0050
Dibenz(a,h)anthracene	0.0018	0.010 U	0.010	0.0048	0.0042 U	0.011	0.0042	0.0039 U	0.0096	0.0039	0.0038 U	0.0094	0.0038	0.010 U	0.010	0.0048	0.0040 U	0.010	0.0040
Indeno(1,2,3-cd)pyrene	0.0018	0.010 U	0.010	0.0046	0.0042 U	0.011	0.0042	0.0039 U	0.0096	0.0039	0.0038 U	0.0094	0.0038	0.010 U	0.010	0.0046	0.0040 U	0.010	0.0040
Pyrene	9.8	NA	NA	NA	0.011 U	0.053	0.011	0.010 U	0.048	0.010	0.0094 U	0.047	0.0094	NA	NA	NA	0.010 U	0.050	0.010
cPAH TEQ	0.00018	ND	NA	NA	ND	NA	NA	ND	NA	NA	ND	NA	NA	ND	NA	NA	ND	NA	NA
PCBs (µg/L)																			
Method SW8082																			
Aroclor 1016	0.000023	0.010 U	0.010	0.0025	0.0059 U	0.0098	0.0059	0.0057 U	0.0095	0.0057	0.0057 U	0.0096	0.0057	0.010 U	0.010	0.0025	0.0059 U	0.0098	0.0059
Aroclor 1221	---	0.010 U	0.010	0.0028	0.0059 U	0.0098	0.0059	0.0057 U	0.0095	0.0057	0.0057 U	0.0096	0.0057	0.010 U	0.010	0.0028	0.0059 U	0.0098	0.0059
Aroclor 1232	---	0.010 U	0.010	0.0028	0.0069 U	0.0098	0.0069	0.0066 U	0.0095	0.0066	0.0067 U	0.0096	0.0067	0.010 U	0.010	0.0028	0.0069 U	0.0098	0.0069
Aroclor 1242	0.000023	0.010 U	0.010	0.0028	0.0059 U	0.0098	0.0059	0.0057 U	0.0095	0.0057	0.0057 U	0.0096	0.0057	0.010 U	0.010	0.0028	0.0059 U	0.0098	0.0059
Aroclor 1248	0.000023	0.010 U	0.010	0.0028	0.0049 U	0.0098	0.0049	0.0047 U	0.0095	0.0047	0.0048 U	0.0096	0.0048	0.010 U	0.010	0.0028	0.0049 U	0.0098	0.0049
Aroclor 1254	0.0000055	0.010 U	0.010	0.0028	0.0049 U	0.0098	0.0049	0.0047 U	0.0095	0.0047	0.0048 U	0.0096	0.0048	0.010 U	0.010	0.0028	0.0049 U	0.0098	0.0049
Aroclor 1260	0.000023	0.010 U	0.010	0.0028	0.0049 U	0.0098	0.0049	0.0047 U	0.0095	0.0047	0.0048 U	0.0096	0.0048	0.010 U	0.010	0.0028	0.0049 U	0.0098	0.0049
Total PCBs	0.000023	ND	NA	NA	ND	NA	NA	ND	NA	NA	ND	NA	NA	ND	NA	NA	ND	NA	NA

TABLE L-1
GROUNDWATER ANALYTICAL RESULTS
BOEING ISAACSON-THOMPSON
REMEDIAL INVESTIGATION

Location:		IT-MW-15			IT-MW-15			IT-MW-15			IT-MW-15			IT-MW-16			IT-MW-16		
Laboratory Sample ID:	Preliminary	UB28A/UB28G/UB29A/UB29F			6568990/6568991/UK92B			6686966/6686967/6686968/UY34D			6787998/6787999/6788000/VJ03D			UB08A/UB08F/UB09A/UB09F			6571471/6571472/UL18D		
Laboratory Data Package ID:	Cleanup	UB28/UB29			1293530/UK92			1315688/UY34			1335480/VJ03			UB08/UB09			1293989/UL18		
Sample Date:	Levels	12/14/2011			03/06/2012			6/13/2012			9/11/2012			12/13/2011			03/07/2012		
		Result	Reporting Limit	Detection Limit	Result	Reporting Limit	Detection Limit	Result	Reporting Limit	Detection Limit	Result	Reporting Limit	Detection Limit	Result	Reporting Limit	Detection Limit	Result	Reporting Limit	Detection Limit
TOTAL PETROLEUM HYDROCARBONS (mg/L)																			
NWTPH-Dx																			
Diesel-Range Organics	0.5	0.10 U	0.10	0.022	0.066 U	0.24	0.066	0.029 U	0.095	0.029	0.028 U	0.095	0.028	0.10 U	0.10	0.022	0.072 U	0.26	0.072
Oil-Range Organics	0.5	0.20 U	0.20	0.044	0.94 U	2.8	0.94	0.067 U	0.240	0.067	0.066 U	0.240	0.066	0.20 U	0.20	0.044	1.0 U	3.1	1.0
NWTPH-G																			
Gasoline-Range Organics	1.0/0.8	0.25 U	0.25	0.06	0.05 U	0.25	0.05	0.05 U	0.25	0.05	0.05 U	0.25	0.05	0.25 U	0.25	0.06	0.05 U	0.25	0.05
TOTAL METALS (µg/L)																			
Method 200.8																			
Antimony	---	0.2 U	0.2	0.010	0.42 U	1.0	0.42	0.42 U	1.0	0.42	0.33 U	1.0	0.33	0.2 U	0.2	0.010	0.42 U	1.0	0.42
Arsenic	---	**43.3**	0.2	0.048	**17.9**	2.0	0.95	**52.2**	2.0	0.95	**47.4**	2.0	0.40	**17.7**	0.2	0.048	**5.1**	2.0	0.95
Barium	---	**19.0**	0.5	0.020	**14.4**	2.0	0.69	**15.4**	2.0	0.69	**24.8**	2.0	0.41	**59.3**	0.5	0.020	**57.7**	2.0	0.69
Beryllium	---	0.2 U	0.2	0.021	0.13 U	0.50	0.13	0.13 U	0.50	0.13	0.025 U	0.50	0.025	0.2 U	0.2	0.021	0.13 U	0.50	0.13
Cadmium	---	0.1 U	0.1	0.010	0.20 U	0.50	0.20	0.20 U	0.50	0.20	0.082 U	0.50	0.082	0.1 U	0.1	0.010	0.20 U	0.50	0.20
Chromium	---	1 U	1	0.11	0.60 U	2.0	0.60	**1.2** J1	2.0	0.60	0.50 U	2.0	0.50	0.5 U	0.5	0.045	0.60 U	2.0	0.60
Copper	---	**1.0**	0.5	0.158	**0.64** J1	2.0	0.38	**0.50** J1	2.0	0.38	**1.1** J1	2.0	0.40	**7.6**	0.5	0.158	**8.4**	2.0	0.38
Lead	---	0.1 U	0.1	0.046	0.080 U	1.0	0.080	0.080 U	1.0	0.080	0.13 UJ2	1.0	0.034	0.1 U	0.1	0.046	0.080 U	1.0	0.080
Nickel	---	**3.7**	0.5	0.079	**2.3**	2.0	0.50	**1.8** J1	2.0	0.50	**5.1**	2.0	0.35	**6.1**	0.5	0.079	**4.1**	2.0	0.50
Selenium	---	0.5 U	0.5	0.127	0.27 U	2.0	0.27	0.27 U	2.0	0.27	0.50 U	2.0	0.50	**0.6**	0.5	0.127	0.27 U	2.0	0.27
Silver	---	0.2 U	0.2	0.008	0.098 U	0.50	0.098	0.098 U	0.50	0.098	0.10 U	0.50	0.10	0.2 U	0.2	0.008	0.098 U	0.50	0.098
Thallium	---	0.2 U	0.2	0.004	0.15 U	0.50	0.15	0.15 U	0.50	0.15	0.15 U	0.50	0.15	0.2 U	0.2	0.004	0.15 U	0.50	0.15
Zinc	---	**15**	4	0.50	**15.5**	15.0	4.0	**24.8**	15.0	4.0	**16.8**	15.0	1.1	**62**	4	0.50	**107**	15.0	4.0
Method SW7196A (mg/L)																			
Chromium VI	0.00058	0.010 U	0.010	0.00300	0.010 U	0.010	0.00300	0.010 U	0.010	0.00300	0.010 U	0.010	0.00300	0.010 U	0.010	0.00300	0.010 U	0.010	0.00300
Method SW7470A/EPA 1631E (ng/L)																			
Mercury	12	20.0 U	20.0	2.60	**2.23**	5.00	1.60	**0.880**	0.500	0.160	**2.80**	0.500	0.160	20.0 U	20.0	2.60	**5.72** J1	10.0	3.2
DISSOLVED METALS (µg/L)																			
Methods 200.8/SW7196A																			
Antimony	150	0.2 U	0.2	0.010	0.42 U	1.0	0.42	0.42 U	1.0	0.42	0.33 U	1.0	0.33	0.2 U	0.2	0.010	0.42 U	1.0	0.42
Arsenic	8	**53.3**	0.2	0.048	**20.0**	2.0	0.95	**53.2**	2.0	0.95	**76.8**	2.0	0.40	**17.1**	0.2	0.048	**4.2**	2.0	0.95
Barium	770	**17.5**	0.5	0.020	**16.1**	2.0	0.69	**15.7**	2.0	0.69	**19.1**	2.0	0.41	**59.1**	0.5	0.020	**60.8**	2.0	0.69
Beryllium	12	0.2 U	0.2	0.021	0.13 U	0.50	0.13	0.13 U	0.50	0.13	0.025 U	0.50	0.025	0.2 U	0.2	0.021	0.13 U	0.50	0.13
Cadmium	0.25	0.1 U	0.1	0.010	0.20 U	0.50	0.20	0.20 U	0.50	0.20	0.082 U	0.50	0.082	0.1 U	0.1	0.010	0.20 U	0.50	0.20
Chromium	74	**0.6**	0.5	0.045	0.60 U	2.0	0.60	**1.1** J1	2.0	0.60	0.50 U	2.0	0.50	0.5 U	0.5	0.045	0.60 U	2.0	0.60
Copper	8	**1.3**	0.5	0.158	**0.44** J1	2.0	0.38	0.38 U	2.0	0.38	0.40 U	2.0	0.40	**8.0**	0.5	0.158	**8.4**	2.0	0.38
Lead	2.5	0.1 U	0.1	0.046	**0.11** J1	1.0	0.080	0.080 U	1.0	0.080	0.034 U	1.0	0.034	0.1 U	0.1	0.046	0.080 U	1.0	0.080
Nickel	8.2	**2.5**	0.5	0.079	**2.5**	2.0	0.50	**2.1**	2.0	0.50	**2.8**	2.0	0.35	**6.1**	0.5	0.079	**4.0**	2.0	0.50
Selenium	5	0.5 U	0.5	0.127	0.27 U	2.0	0.27	0.27 U	2.0	0.27	0.50 U	2.0	0.50	**0.6**	0.5	0.127	0.27 U	2.0	0.27
Silver	22	0.2 U	0.2	0.008	0.098 U	0.50	0.098	0.098 U	0.50	0.098	0.10 U	0.50	0.10	0.2 U	0.2	0.008	0.098 U	0.50	0.098
Thallium	0.47	0.2 U	0.2	0.004	0.15 U	0.50	0.15	0.15 U	0.50	0.15	0.15 U	0.50	0.15	0.2 U	0.2	0.004	0.15 U	0.50	0.15
Zinc	56	**13**	4	0.50	**18.9**	15.0	4.0	**25.4**	15.0	4.0	**20.0**	15.0	1.1	**62**	4	0.50	**109**	15.0	4.0
Method SW7470A/EPA 1631E (ng/L)																			
Mercury	12	20.0 U	20.0	2.60	**1.67**	5.00	1.60	**0.673**	0.500	0.160	**2.27**	0.500	0.160	20.0 U	20.0	2.60	3.20 U	10.0	3.2
CONVENTIONALS (mg/L)																			
Chloride (Method 300.0)	---	NA	NA	NA	NA	NA	NA	**1.7**	0.40	0.20	**2.3**	0.40	0.20	NA	NA	NA	NA	NA	NA
Nitrate (Method 300.0)	---	0.1 U	0.1	0.007	**0.30**	0.10	0.050	0.050 UJ	0.10	0.050	**0.12**	0.10	0.050	**7.6**	0.2	0.014	**8.2**	0.50	0.25
Sulfate (Method 300.0)	---	**6.0**	0.2	0.118	**7.6**	1.0	0.30	**1.5**	1.0	0.30	**66.2**	10.0	3.0	**141**	5.0	2.95	**153**	20.0	6.0
Total Dissolved Solids (Method 160.1)	---	**298**	10.0	10.0	**317**	30.0	9.7	**361**	30.0	9.7	**318**	30.0	9.7	**614**	10.0	10.0	**336**	60.0	19.4
FIELD PARAMETERS																			
Temperature (°C)	---	14.83	NA	NA	14.05	NA	NA	14.99	NA	NA	13.82	NA	NA	15.93	NA	NA	14.18	NA	NA
Conductivity (uS/cm)	---	1279	NA	NA	394	NA	NA	349	NA	NA	473	NA	NA	1853	NA	NA	597	NA	NA
Dissolved Oxygen (mg/L)	---	0.92	NA	NA	0.39	NA	NA	0.42	NA	NA	1.14	NA	NA	1.15	NA	NA	0.71	NA	NA
pH (SU)	---	6.46	NA	NA	6.84	NA	NA	5.97	NA	NA	6.08	NA	NA	6.50	NA	NA	8.21	NA	NA
ORP (mV)	---	-201.2	NA	NA	354.4	NA	NA	-3.9	NA	NA	-82	NA	NA	30.4	NA	NA	17.4	NA	NA
Turbidity (NTU)	---	4.38	NA	NA	29.11	NA	NA	8.50	NA	NA	91.2	NA	NA	2.45	NA	NA	2.67	NA	NA
Ferrous Iron (mg/L)	---	NA	NA	NA	1.2	NA	NA	2.2	NA	NA	4.0	NA	NA	NA	NA	NA	1.0	NA	NA

TABLE L-1
GROUNDWATER ANALYTICAL RESULTS
BOEING ISAACSON-THOMPSON
REMEDIAL INVESTIGATION

Location:		IT-MW-16			IT-MW-16			IT-MW-17			IT-MW-17			IT-MW-17			IT-MW-17		
Laboratory Sample ID:	Preliminary	6692740/6692741/6692742/UZ18H			6787995/6787996/6787997/VJ03C			UA90A/UA90D/UA91A/UA91C			6580630/6580631/UM54A			6692719/6692720/6692721/UZ18A			6788033/6788034/6788035/VJ32B		
Laboratory Data Package ID:	Cleanup	1316786/UZ18			1335480/VJ03			UA90/UA91			1295735/UM54			1316786/UZ18			1335483/VJ32		
Sample Date:	Levels	6/18/2012			9/11/2012			12/12/2011			3/14/2012			6/18/2012			9/12/2012		
		Result	Reporting Limit	Detection Limit	Result	Reporting Limit	Detection Limit	Result	Reporting Limit	Detection Limit	Result	Reporting Limit	Detection Limit	Result	Reporting Limit	Detection Limit	Result	Reporting Limit	Detection Limit
VOLATILES (µg/L)																			
Method SW8260C																			
Acetone	110,000	3.0 U	5.0	3.0	3.0 U	5.0	3.0	5.0 UJ	5.0	2.1	3.0 U	5.0	3.0	3.0 U	5.0	3.0	3.0 U	5.0	3.0
Acrolein	---	5.0 U	25	5.0	5.0 U	25	5.0	5.0 UJ	5.0	2.5	5.0 U	25	5.0	5.0 U	25	5.0	5.0 U	25	5.0
Acrylonitrile	0.057	1.0 U	5.0	1.0	1.0 U	5.0	1.0	1.0 UJ	1.0	0.60	1.0 U	5.0	1.0	1.0 U	5.0	1.0	1.0 U	5.0	1.0
Benzene	2	**0.1** J1	0.2	0.1	0.1 U	0.2	0.1	0.2 UJ	0.2	0.03	0.1 U	0.2	0.1	0.1 U	0.2	0.1	0.1 U	0.2	0.1
Bromobenzene	---	0.1 U	0.5	0.1	0.1 U	0.5	0.1	0.2 UJ	0.2	0.06	0.1 U	0.5	0.1	0.1 U	0.5	0.1	0.1 U	0.5	0.1
Bromochloromethane	---	0.1 U	0.5	0.1	0.1 U	0.5	0.1	0.2 UJ	0.2	0.06	0.1 U	0.5	0.1	0.1 U	0.5	0.1	0.1 U	0.5	0.1
Bromodichloromethane	17	0.1 U	0.5	0.1	0.1 U	0.5	0.1	0.2 UJ	0.2	0.05	0.1 U	0.5	0.1	0.1 U	0.5	0.1	0.1 U	0.5	0.1
Bromoform	---	0.1 UJ	0.5	0.1	0.1 U	0.5	0.1	0.2 UJ	0.2	0.06	0.1 U	0.5	0.1	0.1 U	0.5	0.1	0.1 U	0.5	0.1
Bromomethane	---	0.1 U	0.5	0.1	0.1 U	0.5	0.1	1.0 UJ	1.0	0.25	0.1 U	0.5	0.1	0.1 U	0.5	0.1	0.1 U	0.5	0.1
2-Butanone	73,000	1.0 U	5.0	1.0	1.0 U	5.0	1.0	5.0 UJ	5.0	0.81	1.0 U	5.0	1.0	1.0 U	5.0	1.0	1.0 U	5.0	1.0
n-Butylbenzene	780	0.1 U	0.5	0.1	0.1 U	0.5	0.1	0.2 UJ	0.2	0.02	0.1 U	0.5	0.1	0.1 U	0.5	0.1	0.1 U	0.5	0.1
sec-Butylbenzene	---	0.1 U	0.5	0.1	0.1 U	0.5	0.1	0.2 UJ	0.2	0.02	0.1 U	0.5	0.1	0.1 U	0.5	0.1	0.1 U	0.5	0.1
tert-Butylbenzene	---	0.1 U	0.5	0.1	0.1 U	0.5	0.1	0.2 UJ	0.2	0.03	0.1 U	0.5	0.1	0.1 U	0.5	0.1	0.1 U	0.5	0.1
Carbon Disulfide	3900	0.4 U	0.5	0.4	0.4 U	0.5	0.4	0.2 UJ	0.2	0.04	0.4 U	0.5	0.4	0.4 U	0.5	0.4	0.4 U	0.5	0.4
Carbon Tetrachloride	0.46	0.1 U	0.2	0.1	0.1 U	0.2	0.1	0.2 UJ	0.2	0.04	0.1 U	0.2	0.1	0.1 U	0.2	0.1	0.1 U	0.2	0.1
Chlorobenzene	270	0.1 U	0.5	0.1	0.1 U	0.5	0.1	0.2 UJ	0.2	0.02	0.1 U	0.5	0.1	0.1 U	0.5	0.1	0.1 U	0.5	0.1
Chloroethane	21,000	0.1 U	0.5	0.1	0.1 U	0.5	0.1	0.2 UJ	0.2	0.09	0.1 U	0.5	0.1	0.1 U	0.5	0.1	0.1 U	0.5	0.1
Chloroform	9.4	0.1 U	0.2	0.1	0.1 U	0.2	0.1	0.2 UJ	0.2	0.03	0.1 U	0.2	0.1	0.1 U	0.2	0.1	0.1 U	0.2	0.1
Chloromethane	10.3	0.2 U	0.5	0.2	0.2 U	0.5	0.2	0.5 UJ	0.5	0.10	0.2 U	0.5	0.2	0.2 U	0.5	0.2	0.2 U	0.5	0.2
2-Chlorotoluene	---	0.1 U	0.5	0.1	0.1 U	0.5	0.1	0.2 UJ	0.2	0.02	0.1 U	0.5	0.1	0.1 U	0.5	0.1	0.1 U	0.5	0.1
4-Chlorotoluene	2600	0.1 U	0.5	0.1	0.1 U	0.5	0.1	0.2 UJ	0.2	0.02	0.1 U	0.5	0.1	0.1 U	0.5	0.1	0.1 U	0.5	0.1
1,2-Dibromo-3-chloropropane	---	0.2 U	0.5	0.2	0.2 U	0.5	0.2	0.5 UJ	0.5	0.04	0.2 U	0.5	0.2	0.2 U	0.5	0.2	0.2 U	0.5	0.2
Dibromochloromethane	---	0.1 U	0.5	0.1	0.1 U	0.5	0.1	0.2 UJ	0.2	0.05	0.1 U	0.5	0.1	0.1 U	0.5	0.1	0.1 U	0.5	0.1
Dibromomethane	---	0.1 U	0.5	0.1	0.1 U	0.5	0.1	0.2 UJ	0.2	0.14	0.1 U	0.5	0.1	0.1 U	0.5	0.1	0.1 U	0.5	0.1
trans-1,4-Dichloro-2-butene	---	1.0 UJ	5.0	1.0	1.0 U	5.0	1.0	1.0 UJ	1.0	0.32	1.0 U	5.0	1.0	1.0 U	5.0	1.0	1.0 U	5.0	1.0
1,2-Dichlorobenzene	440	0.1 U	0.5	0.1	0.1 U	0.5	0.1	0.2 UJ	0.2	0.04	0.1 U	0.5	0.1	0.1 U	0.5	0.1	0.1 U	0.5	0.1
1,3-Dichlorobenzene	960	0.1 U	0.5	0.1	0.1 U	0.5	0.1	0.2 UJ	0.2	0.04	0.1 U	0.5	0.1	0.1 U	0.5	0.1	0.1 U	0.5	0.1
1,4-Dichlorobenzene	1.7	0.1 U	0.5	0.1	0.1 U	0.5	0.1	0.2 UJ	0.2	0.04	0.1 U	0.5	0.1	0.1 U	0.5	0.1	0.1 U	0.5	0.1
1,1-Dichloroethane	33	**0.3** J1	0.5	0.1	**0.3** J1	0.5	0.1	0.2 UJ	0.2	0.05	0.1 U	0.5	0.1	0.1 U	0.5	0.1	0.1 U	0.5	0.1
1,2-Dichloroethane	3.6	0.1 U	0.2	0.1	0.1 U	0.2	0.1	0.2 UJ	0.2	0.07	0.1 U	0.2	0.1	0.1 U	0.2	0.1	0.1 U	0.2	0.1
1,1-Dichloroethene	3.2	**0.1** J1	0.2	0.1	0.1 U	0.2	0.1	0.2 UJ	0.2	0.05	0.1 U	0.2	0.1	0.1 U	0.2	0.1	0.1 U	0.2	0.1
cis-1,2-Dichloroethene	130	**2.8**	0.2	0.1	**3.3**	0.2	0.1	0.2 UJ	0.2	0.04	0.1 U	0.2	0.1	0.1 U	0.2	0.1	0.1 U	0.2	0.1
trans-1,2-Dichloroethene	940	**0.4**	0.2	0.1	**0.5**	0.2	0.1	0.2 UJ	0.2	0.05	0.1 U	0.2	0.1	0.1 U	0.2	0.1	0.1 U	0.2	0.1
1,2-Dichloropropane	3.7	0.1 U	0.5	0.1	0.1 U	0.5	0.1	0.2 UJ	0.2	0.04	0.1 U	0.5	0.1	0.1 U	0.5	0.1	0.1 U	0.5	0.1
1,3-Dichloropropane	---	0.1 U	0.5	0.1	0.1 U	0.5	0.1	0.2 UJ	0.2	0.06	0.1 U	0.5	0.1	0.1 U	0.5	0.1	0.1 U	0.5	0.1
2,2-Dichloropropane	---	0.1 U	0.5	0.1	0.1 U	0.5	0.1	0.2 UJ	0.2	0.05	0.1 U	0.5	0.1	0.1 U	0.5	0.1	0.1 U	0.5	0.1
1,1-Dichloropropene	---	0.1 U	0.5	0.1	0.1 U	0.5	0.1	0.2 UJ	0.2	0.03	0.1 U	0.5	0.1	0.1 U	0.5	0.1	0.1 U	0.5	0.1
cis-1,3-Dichloropropene	---	0.1 U	0.2	0.1	0.1 U	0.2	0.1	0.2 UJ	0.2	0.06	0.1 U	0.2	0.1	0.1 U	0.2	0.1	0.1 U	0.2	0.1
trans-1,3-Dichloropropene	---	0.1 U	0.2	0.1	0.1 U	0.2	0.1	0.2 UJ	0.2	0.08	0.1 U	0.2	0.1	0.1 U	0.2	0.1	0.1 U	0.2	0.1
Ethylbenzene	1.7	0.1 U	0.5	0.1	0.1 U	0.5	0.1	0.2 UJ	0.2	0.04	0.1 U	0.5	0.1	0.1 U	0.5	0.1	0.1 U	0.5	0.1
Ethylene Dibromide	---	0.1 U	0.5	0.1	0.1 U	0.5	0.1	0.2 UJ	0.2	0.08	0.1 U	0.5	0.1	0.1 U	0.5	0.1	0.1 U	0.5	0.1
Hexachlorobutadiene	---	0.1 U	0.5	0.1	0.1 U	0.5	0.1	0.5 UJ	0.5	0.07	0.1 U	0.5	0.1	0.1 U	0.5	0.1	0.1 U	0.5	0.1
2-Hexanone	3200	1.0 U	5.0	1.0	1.0 U	5.0	1.0	5.0 UJ	5.0	0.90	1.0 U	5.0	1.0	1.0 U	5.0	1.0	1.0 U	5.0	1.0
Isopropylbenzene	270	0.1 U	0.5	0.1	0.1 U	0.5	0.1	0.2 UJ	0.2	0.02	0.1 U	0.5	0.1	0.1 U	0.5	0.1	0.1 U	0.5	0.1
4-Isopropyltoluene	---	0.1 U	0.5	0.1	0.1 U	0.5	0.1	0.2 UJ	0.2	0.03	0.1 U	0.5	0.1	0.1 U	0.5	0.1	0.1 U	0.5	0.1
Methyl Iodide	---	0.1 U	0.5	0.1	0.1 U	0.5	0.1	1.0 UJ	1.0	0.23	0.1 U	0.5	0.1	0.1 UJ	0.5	0.1	0.1 U	0.5	0.1
4-Methyl-2-Pentanone (MIBK)	19,000	1.0 U	5.0	1.0	1.0 U	5.0	1.0	5.0 UJ	5.0	0.97	1.0 U	5.0	1.0	1.0 U	5.0	1.0	1.0 U	5.0	1.0
Methylene Chloride	230	0.2 U	0.5	0.2	0.2 U	0.5	0.2	0.5 UJ	0.5	0.48	0.2 U	0.5	0.2	0.2 U	0.5	0.2	**0.3** J1	0.5	0.2
Naphthalene	26	0.1 U	0.5	0.1	0.1 U	0.5	0.1	0.5 UJ	0.5	0.12	0.1 U	0.5	0.1	**0.2** J1	0.5	0.1	**0.2** J1	0.5	0.1
n-Propylbenzene	530	0.1 U	0.5	0.1	0.1 U	0.5	0.1	0.2 UJ	0.2	0.02	0.1 U	0.5	0.1	0.1 U	0.5	0.1	0.1 U	0.5	0.1
Styrene	77,000	0.1 U	0.5	0.1	0.1 U	0.5	0.1	0.2 UJ	0.2	0.04	0.1 U	0.5	0.1	0.1 U	0.5	0.1	0.1 U	0.5	0.1
1,1,1,2-Tetrachloroethane	---	0.1 U	0.5	0.1	0.1 U	0.5	0.1	0.2 UJ	0.2	0.04	0.1 U	0.5	0.1	0.1 U	0.5	0.1	0.1 U	0.5	0.1
1,1,2,2-Tetrachloroethane	0.33	0.1 U	0.2	0.1	0.1 U	0.2	0.1	0.2 UJ	0.2	0.06	0.1 U	0.2	0.1	0.1 U	0.2	0.1	0.1 U	0.2	0.1
Tetrachloroethene	3.3	**0.1** J1	0.2	0.1	**0.1** J1	0.2	0.1	0.2 UJ	0.2	0.05	0.1 U	0.2	0.1	0.1 U	0.2	0.1	0.1 U	0.2	0.1
Toluene	1300	0.1 U	0.2	0.1	0.1 U	0.2	0.1	0.2 UJ	0.2	0.04	0.1 U	0.2	0.1	0.1 U	0.2	0.1	0.1 U	0.2	0.1
1,1,2-Trichloro-1,2,2-trifuoroethane	59,000	0.2 U	0.5	0.2	0.2 U	0.5	0.2	0.2 UJ	0.2	0.04	0.2 U	0.5	0.2	0.2 U	0.5	0.2	0.2 U	0.5	0.2
1,2,3-Trichlorobenzene	---	0.1 U	0.5	0.1	0.1 U	0.5	0.1	0.5 UJ	0.5	0.11	0.1 U	0.5	0.1	0.1 U	0.5	0.1	0.1 U	0.5	0.1

TABLE L-1
GROUNDWATER ANALYTICAL RESULTS
BOEING ISAACSON-THOMPSON
REMEDIAL INVESTIGATION

Location:		IT-MW-16			IT-MW-16			IT-MW-17			IT-MW-17			IT-MW-17			IT-MW-17		
Laboratory Sample ID:	Preliminary	6692740/6692741/6692742/UZ18H			6787995/6787996/6787997/VJ03C			UA90A/UA90D/UA91A/UA91C			6580630/6580631/UM54A			6692719/6692720/6692721/UZ18A			6788033/6788034/6788035/VJ32B		
Laboratory Data Package ID:	Cleanup	1316786/UZ18			1335480/VJ03			UA90/UA91			1295735/UM54			1316786/UZ18			1335483/VJ32		
Sample Date:	Levels	6/18/2012			9/11/2012			12/12/2011			3/14/2012			6/18/2012			9/12/2012		
		Result	Reporting Limit	Detection Limit	Result	Reporting Limit	Detection Limit	Result	Reporting Limit	Detection Limit	Result	Reporting Limit	Detection Limit	Result	Reporting Limit	Detection Limit	Result	Reporting Limit	Detection Limit
1,2,4-Trichlorobenzene	1.13	0.1 U	0.5	0.1	0.1 U	0.5	0.1	0.5 UJ	0.5	0.11	0.1 U	0.5	0.1	0.1 U	0.5	0.1	0.1 U	0.5	0.1
1,1,1-Trichloroethane	46,000	0.1 U	0.5	0.1	0.1 U	0.5	0.1	0.2 UJ	0.2	0.04	0.1 U	0.5	0.1	0.1 U	0.5	0.1	0.1 U	0.5	0.1
1,1,2-Trichloroethane	2.3	0.1 U	0.2	0.1	0.1 U	0.2	0.1	0.2 UJ	0.2	0.13	0.1 U	0.2	0.1	0.1 U	0.2	0.1	0.1 U	0.2	0.1
Trichloroethene	1.4	**0.2**	0.2	0.1	**0.2**	0.2	0.1	0.2 UJ	0.2	0.05	0.1 U	0.2	0.1	0.1 U	0.2	0.1	0.1 U	0.2	0.1
Trichlorofluoromethane	6900	0.1 U	0.5	0.1	0.1 U	0.5	0.1	0.2 UJ	0.2	0.04	0.1 U	0.5	0.1	0.1 U	0.5	0.1	0.1 U	0.5	0.1
1,2,3-Trichloropropane	---	0.3 U	1.0	0.3	0.3 U	1.0	0.3	0.5 UJ	0.5	0.13	0.3 U	1.0	0.3	0.3 U	1.0	0.3	0.3 U	1.0	0.3
1,2,4-Trimethylbenzene	303	0.1 U	0.5	0.1	0.1 U	0.5	0.1	0.2 UJ	0.2	0.02	0.1 U	0.5	0.1	0.1 U	0.5	0.1	0.1 U	0.5	0.1
1,3,5-Trimethylbenzene	303	0.1 U	0.5	0.1	0.1 U	0.5	0.1	0.2 UJ	0.2	0.02	0.1 U	0.5	0.1	0.1 U	0.5	0.1	0.1 U	0.5	0.1
Vinyl Acetate	---	0.2 U	0.5	0.2	0.2 U	0.5	0.2	1.0 UJ	1.0	0.07	0.2 U	0.5	0.2	0.2 U	0.5	0.2	0.2 U	0.5	0.2
Vinyl Chloride	0.53	**0.8**	0.2	0.1	0.1 U	0.2	0.1	0.2 UJ	0.2	0.06	0.1 U	0.2	0.1	0.1 U	0.2	0.1	0.1 U	0.2	0.1
m,p-Xylene	1300	0.1 U	0.5	0.1	0.1 U	0.5	0.1	0.4 UJ	0.4	0.05	0.1 U	0.5	0.1	0.1 U	0.5	0.1	0.1 U	0.5	0.1
o-Xylene	1600	0.1 U	0.5	0.1	0.1 U	0.5	0.1	0.2 UJ	0.2	0.04	0.1 U	0.5	0.1	0.1 U	0.5	0.1	0.1 U	0.5	0.1
2-Chloroethylvinylether	---	NA	NA	NA	NA	NA	NA	1.0 UJ	1.0	0.25	NA	NA	NA	NA	NA	NA	NA	NA	NA
Bromoethane	---	NA	NA	NA	NA	NA	NA	0.2 UJ	0.2	0.04	NA	NA	NA	NA	NA	NA	NA	NA	NA
VOLATILES (µg/L)																			
Method SW8260C-SIM																			
Tetrachloroethene	3.3	0.18 U	0.020	0.010	**0.15**	0.020	0.010	0.020 UJ	0.020	0.0036	0.010 U	0.020	0.010	0.026 U	0.020	0.010	**0.011** J1	0.020	0.010
Vinyl Chloride	0.53	**0.80**	0.020	0.010	**0.035**	0.020	0.010	0.020 UJ	0.020	0.0022	0.010 U	0.020	0.010	0.010 U	0.020	0.010	**0.14**	0.020	0.010
Acrylonitrile	0.057	NA	NA	NA	NA	NA	NA	0.050 UJ	0.050	0.0158	NA	NA	NA	NA	NA	NA	NA	NA	NA
SEMIVOLATILES (µg/L)																			
Method SW8270D																			
Acenaphthene	120	**0.2** J1	0.5	0.09	0.1 U	0.5	0.1	1.0 U	1.0	0.55	0.1 U	0.5	0.1	**0.1** J1	0.5	0.09	0.1 U	0.5	0.1
Acenaphthylene	---	0.09 U	0.5	0.09	0.1 U	0.5	0.1	1.0 U	1.0	0.48	0.1 U	0.5	0.1	0.09 U	0.5	0.09	0.1 U	0.5	0.1
Anthracene	200	0.09 U	0.5	0.09	0.1 U	0.5	0.1	1.0 U	1.0	0.53	0.1 U	0.5	0.1	0.09 U	0.5	0.09	0.1 U	0.5	0.1
Benzo(a)anthracene	0.0018	0.09 U	0.5	0.09	0.1 U	0.5	0.1	1.0 U	1.0	0.52	0.1 U	0.5	0.1	0.09 U	0.5	0.09	0.1 U	0.5	0.1
Benzo(a)pyrene	0.00018	0.09 U	0.5	0.09	0.1 U	0.5	0.1	1.0 U	1.0	0.48	0.1 U	0.5	0.1	0.09 U	0.5	0.09	0.1 U	0.5	0.1
Benzo(b)fluoranthene	0.0018	0.09 U	0.5	0.09	0.1 U	0.5	0.1	NA	NA	NA	0.1 U	0.5	0.1	0.09 U	0.5	0.09	0.1 U	0.5	0.1
Benzo(g,h,i)perylene	---	0.09 U	0.5	0.09	0.1 U	0.5	0.1	1.0 U	1.0	0.55	0.1 U	0.5	0.1	0.09 U	0.5	0.09	0.1 U	0.5	0.1
Benzo(k)fluoranthene	0.0018	0.09 U	0.5	0.09	0.1 U	0.5	0.1	NA	NA	NA	0.1 U	0.5	0.1	0.09 U	0.5	0.09	0.1 U	0.5	0.1
Total Benzofluoranthenes	0.0018	NA	NA	NA	NA	NA	NA	1.0 U	1.0	0.48	NA	NA	NA	NA	NA	NA	NA	NA	NA
Benzoic Acid	2,240	6 U	14	6	6 U	14	6	10 U	10	5.1	6 UJ	14	6	6 U	14	6	6 U	15	6
Benzyl Alcohol	182	5 U	14	5	5 U	14	5	5.0 U	5.0	2.0	5 U	14	5	5 U	14	5	5 U	15	5
4-Bromophenyl-phenylether	---	0.5 U	0.9	0.5	0.5 U	1	0.5	1.0 U	1.0	0.42	0.5 U	0.9	0.5	0.5 U	0.9	0.5	0.5 U	1	0.5
Butylbenzylphthalate	0.41	2 U	5	2	2 U	5	2	1.0 U	1.0	0.56	2 U	5	2	2 U	5	2	2 U	5	2
Di-n-Butylphthalate	47	2 U	5	2	2 U	5	2	1.0 U	1.0	0.54	2 U	5	2	2 U	5	2	2 U	5	2
Carbazole	---	0.5 U	0.9	0.5	0.5 U	1	0.5	1.0 U	1.0	0.31	0.5 U	0.9	0.5	0.5 U	0.9	0.5	0.5 U	1	0.5
4-Chloro-3-methylphenol	3700	0.5 U	0.9	0.5	0.5 U	1	0.5	5.0 U	5.0	2.4	0.5 U	0.9	0.5	0.5 U	0.9	0.5	0.5 U	1	0.5
4-Chloroaniline	---	0.5 U	0.9	0.5	0.5 U	1	0.5	5.0 U	5.0	2.6	0.5 U	0.9	0.5	0.5 U	0.9	0.5	0.5 U	1	0.5
bis(2-Chloroethoxy) Methane	---	0.5 U	0.9	0.5	0.5 U	1	0.5	1.0 U	1.0	0.56	0.5 U	0.9	0.5	0.5 U	0.9	0.5	0.5 U	1	0.5
Bis-(2-Chloroethyl) Ether	---	0.5 U	0.9	0.5	0.5 U	1	0.5	1.0 U	1.0	0.58	0.5 U	0.9	0.5	0.5 U	0.9	0.5	0.5 U	1	0.5
2-Chloronaphthalene	---	0.4 U	0.9	0.4	0.4 U	1	0.4	1.0 U	1.0	0.48	0.4 U	0.9	0.4	0.4 U	0.9	0.4	0.4 U	1	0.4
2-Chlorophenol	---	0.5 U	0.9	0.5	0.5 U	1	0.5	1.0 U	1.0	0.53	0.5 U	0.9	0.5	0.5 U	0.9	0.5	0.5 U	1	0.5
4-Chlorophenyl-phenylether	---	0.5 U	0.9	0.5	0.5 U	1	0.5	1.0 U	1.0	0.45	0.5 U	0.9	0.5	0.5 U	0.9	0.5	0.5 U	1	0.5
2,2'-Oxybis(1-Chloropropane)	---	0.5 U	0.9	0.5	0.5 U	1	0.5	1.0 U	1.0	0.62	0.5 U	0.9	0.5	0.5 U	0.9	0.5	0.5 U	1	0.5
Chrysene	0.018	0.09 U	0.5	0.09	0.1 U	0.5	0.1	1.0 U	1.0	0.55	0.1 U	0.5	0.1	0.09 U	0.5	0.09	0.1 U	0.5	0.1
Dibenz(a,h)anthracene	0.0018	0.09 U	0.5	0.09	0.1 U	0.5	0.1	1.0 U	1.0	0.48	0.1 U	0.5	0.1	0.09 U	0.5	0.09	0.1 U	0.5	0.1
Dibenzofuran	1.3	0.5 U	0.9	0.5	0.5 U	1	0.5	1.0 U	1.0	0.48	0.5 U	0.9	0.5	0.5 U	0.9	0.5	0.5 U	1	0.5
1,2-Dichlorobenzene	440	0.5 U	0.9	0.5	0.5 U	1	0.5	1.0 U	1.0	0.36	0.5 U	0.9	0.5	0.5 U	0.9	0.5	0.5 U	1	0.5
1,3-Dichlorobenzene	---	0.5 U	0.9	0.5	0.5 U	1	0.5	1.0 U	1.0	0.36	0.5 U	0.9	0.5	0.5 U	0.9	0.5	0.5 U	1	0.5
1,4-Dichlorobenzene	1.7	0.5 U	0.9	0.5	0.5 U	1	0.5	1.0 U	1.0	0.40	0.5 U	0.9	0.5	0.5 U	0.9	0.5	0.5 U	1	0.5
3,3'-Dichlorobenzidine	---	2 U	5	2	2 U	5	2	5.0 U	5.0	1.5	2 U	5	2	2 U	5	2	2 U	5	2
2,4-Dichlorophenol	---	0.5 U	0.9	0.5	0.5 U	1	0.5	5.0 U	5.0	2.6	0.5 U	0.9	0.5	0.5 U	0.9	0.5	0.5 U	1	0.5
Diethylphthalate	4,236	2 U	5	2	2 U	5	2	1.0 U	1.0	0.58	2 U	5	2	2 U	5	2	2 U	5	2
2,4-Dimethylphenol	660	0.5 U	0.9	0.5	0.5 U	1	0.5	1.0 U	1.0	0.36	0.5 U	0.9	0.5	0.5 U	0.9	0.5	0.5 U	1	0.5
Dimethylphthalate	1,100,000	2 U	5	2	2 U	5	2	1.0 U	1.0	0.53	2 U	5	2	2 U	5	2	2 U	5	2
4,6-Dinitro-2-Methylphenol	---	5 U	14	5	5 U	14	5	10 U	10	3.1	5 U	14	5	5 U	14	5	5 U	15	5
2,4-Dinitrophenol	---	9 U	28	9	10 U	29	10	10 U	10	3.5	10 U	30	10	9 U	28	9	10 U	29	10
2,4-Dinitrotoluene	---	0.9 U	5	0.9	1 U	5	1	5.0 U	5.0	2.5	1 U	5	1	0.9 U	5	0.9	1 U	5	1
2,6-Dinitrotoluene	---	0.5 U	0.9	0.5	0.5 U	1	0.5	5.0 U	5.0	2.4	0.5 U	0.9	0.5	0.5 U	0.9	0.5	0.5 U	1	0.5
bis(2-Ethylhexyl)phthalate	1.2	2 U	5	2	2 U	5	2	**3.7**	1.0	1.9	2 U	5	2	2 U	5	2	2 U	5	2

TABLE L-1
GROUNDWATER ANALYTICAL RESULTS
BOEING ISAACSON-THOMPSON
REMEDIAL INVESTIGATION

Location:		IT-MW-16			IT-MW-16			IT-MW-17			IT-MW-17			IT-MW-17			IT-MW-17		
Laboratory Sample ID:	Preliminary	6692740/6692741/6692742/UZ18H			6787995/6787996/6787997/VJ03C			UA90A/UA90D/UA91A/UA91C			6580630/6580631/UM54A			6692719/6692720/6692721/UZ18A			6788033/6788034/6788035/VJ32B		
Laboratory Data Package ID:	Cleanup	1316786/UZ18			1335480/VJ03			UA90/UA91			1295735/UM54			1316786/UZ18			1335483/VJ32		
Sample Date:	Levels	6/18/2012			9/11/2012			12/12/2011			3/14/2012			6/18/2012			9/12/2012		
		Result	Reporting Limit	Detection Limit	Result	Reporting Limit	Detection Limit	Result	Reporting Limit	Detection Limit	Result	Reporting Limit	Detection Limit	Result	Reporting Limit	Detection Limit	Result	Reporting Limit	Detection Limit
Fluoranthene	11	0.09 U	0.5	0.09	0.1 U	0.5	0.1	1.0 U	1.0	0.52	0.1 U	0.5	0.1	**0.2** J1	0.5	0.09	**0.1** J1	0.5	0.1
Fluorene	45	0.09 U	0.5	0.09	0.1 U	0.5	0.1	1.0 U	1.0	0.56	0.1 U	0.5	0.1	**0.1** J1	0.5	0.09	0.1 U	0.5	0.1
Hexachlorobenzene	---	0.09 U	0.5	0.09	0.1 U	0.5	0.1	1.0 U	1.0	0.47	0.1 U	0.5	0.1	0.09 U	0.5	0.09	0.1 U	0.5	0.1
Hexachlorobutadiene	---	0.5 U	0.9	0.5	0.5 U	1	0.5	1.0 U	1.0	0.31	0.5 U	0.9	0.5	0.5 U	0.9	0.5	0.5 U	1	0.5
Hexachlorocyclopentadiene	---	5 U	14	5	5 U	14	5	5.0 U	5.0	1.2	5 U	14	5	5 U	14	5	5 U	15	5
Hexachloroethane	---	0.9 U	5	0.9	1 U	5	1	1.0 U	1.0	0.35	1 U	5	1	0.9 U	5	0.9	1 U	5	1
Indeno(1,2,3-cd)pyrene	0.0018	0.09 U	0.5	0.09	0.1 U	0.5	0.1	1.0 U	1.0	0.48	0.1 U	0.5	0.1	0.09 U	0.5	0.09	0.1 U	0.5	0.1
Isophorone	---	0.5 U	0.9	0.5	0.5 U	1	0.5	1.0 U	1.0	0.48	0.5 U	0.9	0.5	0.5 U	0.9	0.5	0.5 U	1	0.5
1-Methylnaphthalene	2.3	0.09 U	0.5	0.09	0.1 U	0.5	0.1	1.0 U	1.0	0.48	**0.1** J1	0.5	0.09	**0.3** J1	0.5	0.09	**0.3** J1	0.5	0.1
2-Methylnaphthalene	64	0.09 U	0.5	0.09	0.1 U	0.5	0.1	1.0 U	1.0	0.48	0.1 U	0.5	0.1	**0.2** J1	0.5	0.09	**0.3** J1	0.5	0.1
2-Methylphenol	3100	0.5 U	0.9	0.5	0.5 U	1	0.5	1.0 U	1.0	0.53	0.5 U	0.9	0.5	0.5 U	0.9	0.5	0.5 U	1	0.5
4-Methylphenol	330	0.5 U	0.9	0.5	0.5 U	1	0.5	1.0 U	1.0	0.52	0.5 U	0.9	0.5	0.5 U	0.9	0.5	0.5 U	1	0.5
Naphthalene	26	0.09 U	0.5	0.09	0.1 U	0.5	0.1	1.0 U	1.0	0.52	0.1 U	0.5	0.1	**0.2** J1	0.5	0.09	**0.2** J1	0.5	0.1
2-Nitroaniline	---	0.5 U	0.9	0.5	0.5 U	1	0.5	5.0 U	5.0	2.6	0.5 U	0.9	0.5	0.5 U	0.9	0.5	0.5 U	1	0.5
3-Nitroaniline	---	0.5 U	0.9	0.5	0.5 U	1	0.5	5.0 U	5.0	2.3	0.5 U	0.9	0.5	0.5 U	0.9	0.5	0.5 U	1	0.5
4-Nitroaniline	---	0.5 U	0.9	0.5	0.5 U	1	0.5	5.0 U	5.0	2.2	0.5 U	0.9	0.5	0.5 U	0.9	0.5	0.5 U	1	0.5
Nitrobenzene	---	0.5 U	0.9	0.5	0.5 U	1	0.5	1.0 U	1.0	0.58	0.5 U	0.9	0.5	0.5 U	0.9	0.5	0.5 U	1	0.5
2-Nitrophenol	---	0.5 U	0.9	0.5	0.5 U	1	0.5	5.0 U	5.0	2.0	0.5 U	0.9	0.5	0.5 U	0.9	0.5	0.5 U	1	0.5
4-Nitrophenol	---	9 U	28	9	10 U	29	10	5.0 U	5.0	2.6	10 U	30	10	9 U	28	9	10 U	29	10
N-Nitroso-Di-N-Propylamine	---	0.5 U	0.9	0.5	0.5 U	1	0.5	1.0 U	1.0	0.56	0.5 U	0.9	0.5	0.5 U	0.9	0.5	0.5 U	1	0.5
N-Nitrosodiphenylamine	1.96	0.5 U	0.9	0.5	0.5 U	1	0.5	1.0 U	1.0	0.46	0.5 U	0.9	0.5	0.5 U	0.9	0.5	0.5 U	1	0.5
Di-n-Octyl phthalate	---	2 U	5	2	2 U	5	2	1.0 U	1.0	0.51	2 U	5	2	2 U	5	2	2 U	5	2
Pentachlorophenol	---	0.9 U	5	0.9	1 U	5	1	5.0 U	5.0	2.4	1 U	5	1	0.9 U	5	0.9	1 U	5	1
Phenanthrene	---	0.09 U	0.5	0.09	0.1 U	0.5	0.1	1.0 U	1.0	0.56	**0.2** J1	0.5	0.09	**0.5**	0.5	0.09	**0.6**	0.5	0.1
Phenol	41,000	0.5 U	0.9	0.5	0.5 U	1	0.5	1.0 U	1.0	0.52	0.5 U	0.9	0.5	0.5 U	0.9	0.5	**1**	1	0.5
Pyrene	9.8	0.09 UJ	0.5	0.09	0.1 U	0.5	0.1	1.0 U	1.0	0.55	0.1 U	0.5	0.1	0.2 UJ2	0.5	0.09	**0.2** J1	0.5	0.1
1,2,4-Trichlorobenzene	1.13	0.5 U	0.9	0.5	0.5 U	1	0.5	1.0 U	1.0	0.38	0.5 U	0.9	0.5	0.5 U	0.9	0.5	0.5 U	1	0.5
2,4,5-Trichlorophenol	---	0.5 U	0.9	0.5	0.5 U	1	0.5	5.0 U	5.0	2.2	0.5 U	0.9	0.5	0.5 U	0.9	0.5	0.5 U	1	0.5
2,4,6-Trichlorophenol	---	0.5 U	0.9	0.5	0.5 U	1	0.5	5.0 U	5.0	2.4	0.5 U	0.9	0.5	0.5 U	0.9	0.5	0.5 U	1	0.5
cPAHs (µg/L)																			
Method SW8270D-SIM																			
Benzo(a)anthracene	0.0018	0.0047 U	0.0094	0.0047	0.0048 U	0.0097	0.0048	0.010 U	0.010	0.0063	0.0049 U	0.0098	0.0049	**0.0070** J1	0.0095	0.0047	**0.0060** J1	0.0098	0.0049
Benzo(a)pyrene	0.00018	0.0047 U	0.0094	0.0047	0.0048 U	0.0097	0.0048	0.010 U	0.010	0.0048	0.0049 U	0.0098	0.0049	0.0047 U	0.0095	0.0047	0.0049 U	0.0098	0.0049
Benzo(b)fluoranthene	0.0018	0.0047 U	0.0094	0.0047	0.0048 U	0.0097	0.0048	NA	NA	NA	0.0049 U	0.0098	0.0049	0.0047 U	0.0095	0.0047	0.0049 U	0.0098	0.0049
Benzo(k)fluoranthene	0.0018	0.0047 U	0.0094	0.0047	0.0048 U	0.0097	0.0048	NA	NA	NA	0.0049 U	0.0098	0.0049	0.0047 U	0.0095	0.0047	0.0049 U	0.0098	0.0049
Total Benzofluoranthenes	0.0018	NA	NA	NA	NA	NA	NA	0.020 U	0.020	0.0099	NA	NA	NA	NA	NA	NA	NA	NA	NA
Chrysene	0.018	0.0047 U	0.0094	0.0047	0.0048 U	0.0097	0.0048	0.010 U	0.010	0.0046	0.0049 U	0.0098	0.0049	**0.010**	0.0095	0.0047	0.0049 U	0.0098	0.0049
Dibenz(a,h)anthracene	0.0018	0.0038 U	0.0094	0.0038	0.0039 U	0.0097	0.0039	0.010 U	0.010	0.0048	0.0039 U	0.0098	0.0039	0.0038 U	0.0095	0.0038	0.0039 U	0.0098	0.0039
Indeno(1,2,3-cd)pyrene	0.0018	0.0038 U	0.0094	0.0038	0.0039 U	0.0097	0.0039	0.010 U	0.010	0.0046	0.0039 U	0.0098	0.0039	0.0038 U	0.0095	0.0038	0.0039 U	0.0098	0.0039
Pyrene	9.8	0.0094 U	0.047	0.0094	0.0097 U	0.048	0.0097	NA	NA	NA	**0.048** J1	0.049	0.0098	**0.18**	0.047	0.010	0.14	0.049	0.0098
cPAH TEQ	0.00018	ND	NA	NA	ND	NA	NA	ND	NA	NA	ND	NA	NA	**0.0008** J	NA	NA	**0.0006** J	NA	NA
PCBs (µg/L)																			
Method SW8082																			
Aroclor 1016	0.000023	0.0057 U	0.0095	0.0057	0.0058 U	0.0097	0.0058	0.010 U	0.010	0.0025	0.0057 U	0.0096	0.0057	0.0057 U	0.0095	0.0057	0.0059 U	0.0098	0.0059
Aroclor 1221	---	0.0057 U	0.0095	0.0057	0.0058 U	0.0097	0.0058	0.010 U	0.010	0.0028	0.0057 U	0.0096	0.0057	0.0057 U	0.0095	0.0057	0.0059 U	0.0098	0.0059
Aroclor 1232	---	0.0067 U	0.0095	0.0067	0.0068 U	0.0097	0.0068	0.010 U	0.010	0.0028	0.0067 U	0.0096	0.0067	0.0067 U	0.0095	0.0067	0.0069 U	0.0098	0.0069
Aroclor 1242	0.000023	0.0057 U	0.0095	0.0057	0.0058 U	0.0097	0.0058	0.010 U	0.010	0.0028	0.0057 U	0.0096	0.0057	0.0057 U	0.0095	0.0057	0.0059 U	0.0098	0.0059
Aroclor 1248	0.000023	0.0048 U	0.0095	0.0048	0.0048 U	0.0097	0.0048	0.010 U	0.010	0.0028	0.0048 U	0.0096	0.0048	**0.016**	0.0095	0.0048	0.0049 U	0.0098	0.0049
Aroclor 1254	0.0000055	0.0048 U	0.0095	0.0048	0.0048 U	0.0097	0.0048	0.010 U	0.010	0.0028	**0.012**	0.0096	0.0048	0.0048 U	0.0095	0.0048	0.0049 U	0.0098	0.0049
Aroclor 1260	0.000023	0.0048 U	0.0095	0.0048	0.0048 U	0.0097	0.0048	0.010 U	0.010	0.0028	0.0048 U	0.0096	0.0048	0.0048 U	0.0095	0.0048	0.0049 U	0.0098	0.0049
Total PCBs	0.000023	ND	NA	NA	ND	NA	NA	ND	NA	NA	**0.012**	NA	NA	**0.016**	NA	NA	ND	NA	NA

TABLE L-1
GROUNDWATER ANALYTICAL RESULTS
BOEING ISAACSON-THOMPSON
REMEDIAL INVESTIGATION

Location:		IT-MW-16			IT-MW-16			IT-MW-17			IT-MW-17			IT-MW-17			IT-MW-17		
Laboratory Sample ID:	Preliminary	6692740/6692741/6692742/UZ18H			6787995/6787996/6787997/VJ03C			UA90A/UA90D/UA91A/UA91C			6580630/6580631/UM54A			6692719/6692720/6692721/UZ18A			6788033/6788034/6788035/VJ32B		
Laboratory Data Package ID:	Cleanup	1316786/UZ18			1335480/VJ03			UA90/UA91			1295735/UM54			1316786/UZ18			1335483/VJ32		
Sample Date:	Levels	6/18/2012			9/11/2012			12/12/2011			3/14/2012			6/18/2012			9/12/2012		
		Result	Reporting Limit	Detection Limit	Result	Reporting Limit	Detection Limit	Result	Reporting Limit	Detection Limit	Result	Reporting Limit	Detection Limit	Result	Reporting Limit	Detection Limit	Result	Reporting Limit	Detection Limit
TOTAL PETROLEUM HYDROCARBONS (mg/L)																			
NWTPH-Dx																			
Diesel-Range Organics	0.5	0.031 U	0.100	0.031	0.029 U	0.097	0.029	0.10 U	0.10	0.022	0.070 U	0.25	0.070	0.029 U	0.096	0.029	0.029 U	0.097	0.029
Oil-Range Organics	0.5	0.072 U	0.260	0.072	0.068 U	0.240	0.068	0.20 U	0.20	0.044	1.0 U	3.0	1.0	0.067 U	0.240	0.067	0.068 U	0.240	0.068
NWTPH-G																			
Gasoline-Range Organics	1.0/0.8	0.05 U	0.25	0.05	0.05 U	0.25	0.05	0.25 U	0.25	0.06	0.05 U	0.25	0.05	0.05 U	0.25	0.05	0.05 U	0.25	0.05
TOTAL METALS (µg/L)																			
Method 200.8																			
Antimony	---	0.33 U	1.0	0.33	0.33 U	1.0	0.33	1 U	1	0.05	**0.73** J1	1.0	0.42	**1.4**	1.0	0.33	0.33 U	1.0	0.33
Arsenic	---	**2.3**	2.0	0.20	**1070**	10.0	2.0	**16**	2	0.24	**9.2**	2.0	0.95	**63.1**	2.0	0.20	**5.5** J1	10.0	2.0
Barium	---	**43.1**	2.0	0.41	**18.6**	2.0	0.41	**77**	2	0.10	**34.3**	2.0	0.69	**75.7**	2.0	0.41	**104**	2.0	0.41
Beryllium	---	0.025 U	0.50	0.025	**0.042** J1	0.50	0.025	1 U	1	0.10	0.13 U	0.50	0.13	0.025 U	0.50	0.025	0.025 U	0.50	0.025
Cadmium	---	**0.11** J1	0.50	0.048	**0.12** J1	0.50	0.082	0.5 U	0.5	0.050	0.20 U	0.50	0.20	0.048 U	0.50	0.048	0.082 U	0.50	0.082
Chromium	---	**0.70** J1	2.0	0.50	**1.2** J1	2.0	0.50	2 U	2	0.22	**1.5** J1	2.0	0.60	**0.50** J1	2.0	0.10	0.50 U	2.0	0.50
Copper	---	**7.5**	2.0	0.15	**21.8**	2.0	0.40	2 U	2	0.79	1.6 UJ2	2.0	0.38	**6.2**	2.0	0.15	**0.68** J1	2.0	0.40
Lead	---	0.034 U	1.0	0.034	0.049 UJ2	1.0	0.034	0.5 U	0.5	0.230	**0.59** J1	1.0	0.080	**2.9**	1.0	0.034	**0.12** J1	1.0	0.034
Nickel	---	**7.7**	2.0	0.13	**7.3**	2.0	0.35	**5**	2	0.40	**1.0** J1	2.0	0.50	**2.0**	2.0	0.13	**0.63** J1	2.0	0.35
Selenium	---	**0.20** J1	2.0	0.18	0.50 U	2.0	0.50	10 U	10	0.6	0.27 UJ	2.0	0.27	**0.69** J1	2.0	0.18	**0.66** J1	2.0	0.50
Silver	---	0.10 U	0.50	0.10	0.10 U	0.50	0.10	1 U	1	0.04	0.098 U	0.50	0.098	0.10 U	0.50	0.10	0.10 U	0.50	0.10
Thallium	---	0.029 U	0.50	0.029	0.15 U	0.50	0.15	1 U	1	0.02	0.15 U	0.50	0.15	0.029 U	0.50	0.029	0.15 U	0.50	0.15
Zinc	---	**48.8**	15.0	1.1	**56.4**	15.0	1.1	20 U	20	2.5	4.0 U	15.0	4.0	**12.8** J1	15.0	1.1	1.1 U	15.0	1.1
Method SW7196A (mg/L)																			
Chromium VI	0.00058	0.010 U	0.010	0.00300	0.010 U	0.010	0.00300	0.010 UJ	0.010	0.00300	0.010 U	0.010	0.00300	0.010 UJ	0.010	0.00300	0.010 U	0.010	0.00300
Method SW7470A/EPA 1631E (ng/L)																			
Mercury	12	**2.47** J1	5.00	1.60	**22.9**	5.00	1.60	20.0 U	20.0	2.60	1.60 U	5.00	1.60	**3.25** J1	5.00	1.60	3.20 U	10.0	3.20
DISSOLVED METALS (µg/L)																			
Methods 200.8/SW7196A																			
Antimony	150	0.33 U	1.0	0.33	0.33 U	1.0	0.33	1 U	1	0.05	**0.61** J1	1.0	0.42	**0.97** J1	1.0	0.33	0.33 U	1.0	0.33
Arsenic	8	**5.0**	2.0	0.20	**1040**	10.0	2.0	**23**	2	0.24	**9.6**	2.0	0.95	**12.5**	2.0	0.20	**4.3** J1	10.0	2.0
Barium	770	**38.9**	2.0	0.41	**18.2**	2.0	0.41	**76**	2	0.10	**34.8**	2.0	0.69	**56.3**	2.0	0.41	**112**	2.0	0.41
Beryllium	12	**0.038** J1	0.50	0.025	0.025 U	0.50	0.025	1 U	1	0.10	0.13 U	0.50	0.13	0.025 U	0.50	0.025	0.025 U	0.50	0.025
Cadmium	0.25	**0.11** J1	0.50	0.048	0.082 U	0.50	0.082	0.5 U	0.5	0.050	0.20 U	0.50	0.20	0.048 U	0.50	0.048	0.082 U	0.50	0.082
Chromium	74	**1.4** J1	2.0	0.50	**1.2** J1	2.0	0.50	2 U	2	0.22	**0.80** J1	2.0	0.60	**0.15** J1	2.0	0.10	0.50 U	2.0	0.50
Copper	8	**11.5**	2.0	0.15	**18.7**	2.0	0.40	2 U	2	0.79	**0.62** J1	2.0	0.38	**0.39** J1	2.0	0.15	0.40 U	2.0	0.40
Lead	2.5	0.034 U	1.0	0.034	0.038 UJ2	1.0	0.034	0.5 U	0.5	0.230	0.080 U	1.0	0.080	0.034 U	1.0	0.034	0.034 U	1.0	0.034
Nickel	8.2	**9.1**	2.0	0.13	**7.3**	2.0	0.35	**5**	2	0.40	**0.68** J1	2.0	0.50	**0.40** J1	2.0	0.13	**0.73** J1	2.0	0.35
Selenium	5	**0.23** J1	2.0	0.18	0.50 U	2.0	0.50	10 U	10	0.6	0.27 UJ	2.0	0.27	**0.69** J1	2.0	0.18	**0.82** J1	2.0	0.50
Silver	22	0.10 U	0.50	0.10	0.10 U	0.50	0.10	1 U	1	0.04	0.098 U	0.50	0.098	0.10 U	0.50	0.10	0.10 U	0.50	0.10
Thallium	0.47	0.029 U	0.50	0.029	0.15 U	0.50	0.15	1 U	1	0.02	0.15 U	0.50	0.15	0.029 U	0.50	0.029	0.15 U	0.50	0.15
Zinc	56	**55.2**	15.0	1.1	**55.8**	15.0	1.1	20 U	20	2.5	4.0 U	15.0	4.0	**1.5** J1	15.0	1.1	1.1 U	15.0	1.1
Method SW7470A/EPA 1631E (ng/L)																			
Mercury	12	**0.223**	0.500	0.160	**9.96**	5.00	1.60	20.0 U	20.0	2.60	1.60 U	5.00	1.60	1.60 U	5.00	1.60	**3.97** J1	5.00	1.60
CONVENTIONALS (mg/L)																			
Chloride (Method 300.0)	---	**12.7**	2.0	1.0	**5.7**	0.40	0.20	NA	NA	NA	NA	NA	NA	**2290**	200	100	**6800**	2000	1000
Nitrate (Method 300.0)	---	**2.3**	0.10	0.050	**3.2**	0.20	0.10	0.1 U	0.1	0.007	**0.25**	0.10	0.050	**0.12**	0.10	0.050	0.050 U	0.10	0.050
Sulfate (Method 300.0)	---	**140**	20.0	6.0	**65.6**	10.0	3.0	**648**	20.0	11.8	**286**	100	30.0	**326**	50.0	15.0	**1360**	200	60.0
Total Dissolved Solids (Method 160.1)	---	**544**	60.0	19.4	**485**	30.0	9.7	**8210**	100	100	**3950**	600	194	**3820** J	600	194	**11,200**	2400	776
FIELD PARAMETERS																			
Temperature (°C)	---	15.02	NA	NA	20.10	NA	NA	12.11	NA	NA	9.69	NA	NA	12.78	NA	NA	16.63	NA	NA
Conductivity (uS/cm)	---	557	NA	NA	634	NA	NA	26823	NA	NA	4351	NA	NA	5620	NA	NA	2230	NA	NA
Dissolved Oxygen (mg/L)	---	0.44	NA	NA	0.64	NA	NA	0.80	NA	NA	2.29	NA	NA	0.41	NA	NA	0.99	NA	NA
pH (SU)	---	6.83	NA	NA	6.31	NA	NA	9.07	NA	NA	10.40	NA	NA	10.09	NA	NA	9.63	NA	NA
ORP (mV)	---	-36.6	NA	NA	25	NA	NA	-29.9	NA	NA	-181.8	NA	NA	-191.9	NA	NA	-262	NA	NA
Turbidity (NTU)	---	3.98	NA	NA	53.7	NA	NA	0.00	NA	NA	3.71	NA	NA	7.95	NA	NA	21.25	NA	NA
Ferrous Iron (mg/L)	---	0.8	NA	NA	0.0	NA	NA	NA	NA	NA	0.0	NA	NA	0.0	NA	NA	0.0	NA	NA

TABLE L-1
GROUNDWATER ANALYTICAL RESULTS
BOEING ISAACSON-THOMPSON
REMEDIAL INVESTIGATION

Location:		IT-MW-18			IT-MW-18			IT-MW-18			IT-MW-18			IT-MW-19			IT-MW-19		
Laboratory Sample ID:	Preliminary	UA45H/UA54Q/UA55H/UA55P/UB47H/UB47P			6580636/6580637/UM54D			6692731/6692732/6692733/UZ18E			6788045/6788046/6788047/VJ32F			UA44F/UA44N/UA45F/UA45M/UB46F/UB46M			6578919/6578920/UM31C		
Laboratory Data Package ID:	Cleanup	UA45/UA55/UB47			1295735/UM54			1316786/UZ18			1335483/VJ32			UA44/UA45/UB46			1295418/UM31		
Sample Date:	Levels	12/08/2011			3/14/2012			6/18/2012			9/12/2012			12/07/2011			3/13/2012		
		Result	Reporting Limit	Detection Limit	Result	Reporting Limit	Detection Limit	Result	Reporting Limit	Detection Limit	Result	Reporting Limit	Detection Limit	Result	Reporting Limit	Detection Limit	Result	Reporting Limit	Detection Limit
VOLATILES (µg/L)																			
Method SW8260C																			
Acetone	110,000	5.0 U	5.0	2.1	3.0 U	5.0	3.0	15 U	25	15	3.0 U	5.0	3.0	5.0 U	5.0	2.1	3.0 U	5.0	3.0
Acrolein	---	5.0 UJ	5.0	2.5	5.0 U	25	5.0	25 U	130	25	5.0 U	25	5.0	5.0 UJ	5.0	2.5	5.0 U	25	5.0
Acrylonitrile	0.057	1.0 U	1.0	0.60	1.0 U	5.0	1.0	5.0 U	25	5.0	1.0 U	5.0	1.0	1.0 U	1.0	0.60	1.0 U	5.0	1.0
Benzene	2	0.2 U	0.2	0.03	0.1 U	0.2	0.1	0.5 U	1.0	0.5	0.1 U	0.2	0.1	0.2 U	0.2	0.03	0.1 U	0.2	0.1
Bromobenzene	---	0.2 U	0.2	0.06	0.1 U	0.5	0.1	0.5 U	2.5	0.5	0.1 U	0.5	0.1	0.2 U	0.2	0.06	0.1 U	0.5	0.1
Bromochloromethane	---	0.2 U	0.2	0.06	0.1 U	0.5	0.1	0.5 U	2.5	0.5	0.1 U	0.5	0.1	0.2 U	0.2	0.06	0.1 U	0.5	0.1
Bromodichloromethane	17	0.2 U	0.2	0.05	0.1 U	0.5	0.1	0.5 U	2.5	0.5	0.1 U	0.5	0.1	0.2 U	0.2	0.05	0.1 U	0.5	0.1
Bromoform	---	0.2 U	0.2	0.06	0.1 U	0.5	0.1	0.5 UJ	2.5	0.5	0.1 U	0.5	0.1	0.2 U	0.2	0.06	0.1 U	0.5	0.1
Bromomethane	---	1.0 U	1.0	0.25	0.1 U	0.5	0.1	0.5 U	2.5	0.5	0.1 U	0.5	0.1	1.0 U	1.0	0.25	0.1 U	0.5	0.1
2-Butanone	73,000	5.0 UJ	5.0	0.81	1.0 U	5.0	1.0	5.0 U	25	5.0	1.0 U	5.0	1.0	5.0 UJ	5.0	0.81	1.0 U	5.0	1.0
n-Butylbenzene	780	0.2 U	0.2	0.02	0.1 U	0.5	0.1	0.5 U	2.5	0.5	0.1 U	0.5	0.1	0.2 U	0.2	0.02	0.1 U	0.5	0.1
sec-Butylbenzene	---	0.2 U	0.2	0.02	0.1 U	0.5	0.1	0.5 U	2.5	0.5	0.1 U	0.5	0.1	0.2 U	0.2	0.02	0.1 U	0.5	0.1
tert-Butylbenzene	---	0.2 U	0.2	0.03	0.1 U	0.5	0.1	0.5 U	2.5	0.5	0.1 U	0.5	0.1	0.2 U	0.2	0.03	0.1 U	0.5	0.1
Carbon Disulfide	3900	0.2 U	0.2	0.04	0.4 U	0.5	0.4	2.0 U	2.5	2.0	0.4 U	0.5	0.4	0.2 U	0.2	0.04	0.4 U	0.5	0.4
Carbon Tetrachloride	0.46	0.2 U	0.2	0.04	0.1 U	0.2	0.1	0.5 U	1.0	0.5	0.1 U	0.2	0.1	0.2 U	0.2	0.04	0.1 U	0.2	0.1
Chlorobenzene	270	0.2 U	0.2	0.02	0.1 U	0.5	0.1	0.5 U	2.5	0.5	0.1 U	0.5	0.1	0.2 U	0.2	0.02	0.1 U	0.5	0.1
Chloroethane	21,000	0.2 U	0.2	0.09	0.1 U	0.5	0.1	0.5 U	2.5	0.5	0.1 U	0.5	0.1	0.2 U	0.2	0.09	0.1 U	0.5	0.1
Chloroform	9.4	0.2 U	0.2	0.03	0.1 U	0.2	0.1	0.5 U	1.0	0.5	0.1 U	0.2	0.1	0.2 U	0.2	0.03	0.1 U	0.2	0.1
Chloromethane	10.3	0.5 U	0.5	0.10	0.2 U	0.5	0.2	1.0 U	2.5	1.0	0.2 U	0.5	0.2	0.5 U	0.5	0.10	0.2 U	0.5	0.2
2-Chlorotoluene	---	0.2 U	0.2	0.02	0.1 U	0.5	0.1	0.5 U	2.5	0.5	0.1 U	0.5	0.1	0.2 U	0.2	0.02	0.1 U	0.5	0.1
4-Chlorotoluene	2600	0.2 U	0.2	0.02	0.1 U	0.5	0.1	0.5 U	2.5	0.5	0.1 U	0.5	0.1	0.2 U	0.2	0.02	0.1 U	0.5	0.1
1,2-Dibromo-3-chloropropane	---	0.5 U	0.5	0.04	0.2 U	0.5	0.2	1.0 U	2.5	1.0	0.2 U	0.5	0.2	0.5 U	0.5	0.04	0.2 U	0.5	0.2
Dibromochloromethane	---	0.2 U	0.2	0.05	0.1 U	0.5	0.1	0.5 U	2.5	0.5	0.1 U	0.5	0.1	0.2 U	0.2	0.05	0.1 U	0.5	0.1
Dibromomethane	---	0.2 U	0.2	0.14	0.1 U	0.5	0.1	0.5 U	2.5	0.5	0.1 U	0.5	0.1	0.2 U	0.2	0.14	0.1 U	0.5	0.1
trans-1,4-Dichloro-2-butene	---	1.0 UJ	1.0	0.32	1.0 U	5.0	1.0	5.0 UJ	25	5.0	1.0 U	5.0	1.0	1.0 UJ	1.0	0.32	1.0 U	5.0	1.0
1,2-Dichlorobenzene	440	0.2 U	0.2	0.04	0.1 U	0.5	0.1	0.5 U	2.5	0.5	0.1 U	0.5	0.1	0.2 U	0.2	0.04	0.1 U	0.5	0.1
1,3-Dichlorobenzene	960	0.2 U	0.2	0.04	0.1 U	0.5	0.1	0.5 U	2.5	0.5	0.1 U	0.5	0.1	0.2 U	0.2	0.04	0.1 U	0.5	0.1
1,4-Dichlorobenzene	1.7	0.2 U	0.2	0.04	0.1 U	0.5	0.1	0.5 U	2.5	0.5	0.1 U	0.5	0.1	0.2 U	0.2	0.04	0.1 U	0.5	0.1
1,1-Dichloroethane	33	0.2 U	0.2	0.05	0.1 U	0.5	0.1	0.5 U	2.5	0.5	0.1 U	0.5	0.1	0.2 U	0.2	0.05	0.1 U	0.5	0.1
1,2-Dichloroethane	3.6	0.2 U	0.2	0.07	0.1 U	0.2	0.1	0.5 U	1.0	0.5	0.1 U	0.2	0.1	0.2 U	0.2	0.07	0.1 U	0.2	0.1
1,1-Dichloroethene	3.2	0.2 U	0.2	0.05	0.1 U	0.2	0.1	0.5 U	1.0	0.5	0.1 U	0.2	0.1	0.2 U	0.2	0.05	0.1 U	0.2	0.1
cis-1,2-Dichloroethene	130	**1.0**	0.2	0.04	**0.3**	0.2	0.1	**0.7** J1	1.0	0.5	**0.6**	0.2	0.1	0.2 U	0.2	0.04	0.1 U	0.2	0.1
trans-1,2-Dichloroethene	940	0.2 U	0.2	0.05	0.1 U	0.2	0.1	0.5 U	1.0	0.5	0.1 U	0.2	0.1	0.2 U	0.2	0.05	0.1 U	0.2	0.1
1,2-Dichloropropane	3.7	0.2 U	0.2	0.04	0.1 U	0.5	0.1	0.5 U	2.5	0.5	0.1 U	0.5	0.1	0.2 U	0.2	0.04	0.1 U	0.5	0.1
1,3-Dichloropropane	---	0.2 U	0.2	0.06	0.1 U	0.5	0.1	0.5 U	2.5	0.5	0.1 U	0.5	0.1	0.2 U	0.2	0.06	0.1 U	0.5	0.1
2,2-Dichloropropane	---	0.2 U	0.2	0.05	0.1 U	0.5	0.1	0.5 U	2.5	0.5	0.1 U	0.5	0.1	0.2 U	0.2	0.05	0.1 U	0.5	0.1
1,1-Dichloropropene	---	0.2 U	0.2	0.03	0.1 U	0.5	0.1	0.5 U	2.5	0.5	0.1 U	0.5	0.1	0.2 U	0.2	0.03	0.1 U	0.5	0.1
cis-1,3-Dichloropropene	---	0.2 U	0.2	0.06	0.1 U	0.2	0.1	0.5 U	1.0	0.5	0.1 U	0.2	0.1	0.2 U	0.2	0.06	0.1 U	0.2	0.1
trans-1,3-Dichloropropene	---	0.2 U	0.2	0.08	0.1 U	0.2	0.1	0.5 U	1.0	0.5	0.1 U	0.2	0.1	0.2 U	0.2	0.08	0.1 U	0.2	0.1
Ethylbenzene	1.7	0.2 U	0.2	0.04	0.1 U	0.5	0.1	0.5 U	2.5	0.5	0.1 U	0.5	0.1	0.2 U	0.2	0.04	0.1 U	0.5	0.1
Ethylene Dibromide	---	0.2 U	0.2	0.08	0.1 U	0.5	0.1	0.5 U	2.5	0.5	0.1 U	0.5	0.1	0.2 U	0.2	0.08	0.1 U	0.5	0.1
Hexachlorobutadiene	---	0.5 U	0.5	0.07	0.1 U	0.5	0.1	0.5 U	2.5	0.5	0.1 U	0.5	0.1	0.5 U	0.5	0.07	0.1 U	0.5	0.1
2-Hexanone	3200	5.0 U	5.0	0.90	1.0 U	5.0	1.0	5.0 U	25	5.0	1.0 U	5.0	1.0	5.0 U	5.0	0.90	1.0 U	5.0	1.0
Isopropylbenzene	270	0.2 U	0.2	0.02	0.1 U	0.5	0.1	0.5 U	2.5	0.5	0.1 U	0.5	0.1	0.2 U	0.2	0.02	0.1 U	0.5	0.1
4-Isopropyltoluene	---	0.2 U	0.2	0.03	0.1 U	0.5	0.1	0.5 U	2.5	0.5	0.1 U	0.5	0.1	0.2 U	0.2	0.03	0.1 U	0.5	0.1
Methyl Iodide	---	1.0 U	1.0	0.23	0.1 U	0.5	0.1	0.5 U	2.5	0.5	0.1 U	0.5	0.1	1.0 U	1.0	0.23	0.1 U	0.5	0.1
4-Methyl-2-Pentanone (MIBK)	19,000	5.0 U	5.0	0.97	1.0 U	5.0	1.0	5.0 U	25	5.0	1.0 U	5.0	1.0	5.0 U	5.0	0.97	1.0 U	5.0	1.0
Methylene Chloride	230	0.5 U	0.5	0.48	0.2 U	0.5	0.2	1.0 U	2.5	1.0	0.2 U	0.5	0.2	0.5 U	0.5	0.48	0.2 U	0.5	0.2
Naphthalene	26	0.5 U	0.5	0.12	0.1 U	0.5	0.1	0.5 U	2.5	0.5	0.1 U	0.5	0.1	0.5 U	0.5	0.12	0.1 U	0.5	0.1
n-Propylbenzene	530	0.2 U	0.2	0.02	0.1 U	0.5	0.1	0.5 U	2.5	0.5	0.1 U	0.5	0.1	0.2 U	0.2	0.02	0.1 U	0.5	0.1
Styrene	77,000	0.2 U	0.2	0.04	0.1 U	0.5	0.1	0.5 U	2.5	0.5	0.1 U	0.5	0.1	0.2 U	0.2	0.04	0.1 U	0.5	0.1
1,1,1,2-Tetrachloroethane	---	0.2 U	0.2	0.04	0.1 U	0.5	0.1	0.5 U	2.5	0.5	0.1 U	0.5	0.1	0.2 U	0.2	0.04	0.1 U	0.5	0.1
1,1,2,2-Tetrachloroethane	0.33	0.2 U	0.2	0.06	0.1 U	0.2	0.1	0.5 U	1.0	0.5	0.1 U	0.2	0.1	0.2 U	0.2	0.06	0.1 U	0.2	0.1
Tetrachloroethene	3.3	0.2 U	0.2	0.05	0.1 U	0.2	0.1	0.5 U	1.0	0.5	0.1 U	0.2	0.1	0.2 U	0.2	0.05	0.1 U	0.2	0.1
Toluene	1300	0.2 U	0.2	0.04	0.1 U	0.2	0.1	0.5 U	1.0	0.5	0.1 U	0.2	0.1	0.2 U	0.2	0.04	0.1 U	0.2	0.1
1,1,2-Trichloro-1,2,2-trifuoroethane	59,000	0.2 U	0.2	0.04	0.2 U	0.5	0.2	1.0 U	2.5	1.0	0.2 U	0.5	0.2	0.2 U	0.2	0.04	0.2 U	0.5	0.2
1,2,3-Trichlorobenzene	---	0.5 U	0.5	0.11	0.1 U	0.5	0.1	0.5 U	2.5	0.5	0.1 U	0.5	0.1	0.5 U	0.5	0.11	0.1 U	0.5	0.1

TABLE L-1
GROUNDWATER ANALYTICAL RESULTS
BOEING ISAACSON-THOMPSON
REMEDIAL INVESTIGATION

Location:		IT-MW-18			IT-MW-18			IT-MW-18			IT-MW-18			IT-MW-19			IT-MW-19		
Laboratory Sample ID:	Preliminary	UA45H/UA54Q/UA55H/UA55P/UB47H/UB47P			6580636/6580637/UM54D			6692731/6692732/6692733/UZ18E			6788045/6788046/6788047/VJ32F			UA44F/UA44N/UA45F/UA45M/UB46F/UB46M			6578919/6578920/UM31C		
Laboratory Data Package ID:	Cleanup	UA45/UA55/UB47			1295735/UM54			1316786/UZ18			1335483/VJ32			UA44/UA45/UB46			1295418/UM31		
Sample Date:	Levels	12/08/2011			3/14/2012			6/18/2012			9/12/2012			12/07/2011			3/13/2012		
		Result	Reporting Limit	Detection Limit	Result	Reporting Limit	Detection Limit	Result	Reporting Limit	Detection Limit	Result	Reporting Limit	Detection Limit	Result	Reporting Limit	Detection Limit	Result	Reporting Limit	Detection Limit
1,2,4-Trichlorobenzene	1.13	0.5 U	0.5	0.11	0.1 U	0.5	0.1	0.5 U	2.5	0.5	0.1 U	0.5	0.1	0.5 U	0.5	0.11	0.1 U	0.5	0.1
1,1,1-Trichloroethane	46,000	0.2 U	0.2	0.04	0.1 U	0.5	0.1	0.5 U	2.5	0.5	0.1 U	0.5	0.1	0.2 U	0.2	0.04	0.1 U	0.5	0.1
1,1,2-Trichloroethane	2.3	0.2 U	0.2	0.13	0.1 U	0.2	0.1	0.5 U	1.0	0.5	0.1 U	0.2	0.1	0.2 U	0.2	0.13	0.1 U	0.2	0.1
Trichloroethene	1.4	0.2 U	0.2	0.05	0.1 U	0.2	0.1	0.5 U	1.0	0.5	0.1 U	0.2	0.1	0.2 U	0.2	0.05	0.1 U	0.2	0.1
Trichlorofluoromethane	6900	0.2 U	0.2	0.04	0.1 U	0.5	0.1	0.5 U	2.5	0.5	0.1 U	0.5	0.1	0.2 U	0.2	0.04	0.1 U	0.5	0.1
1,2,3-Trichloropropane	---	0.5 U	0.5	0.13	0.3 U	1.0	0.3	1.5 U	5.0	1.5	0.3 U	1.0	0.3	0.5 U	0.5	0.13	0.3 U	1.0	0.3
1,2,4-Trimethylbenzene	303	0.2 U	0.2	0.02	0.1 U	0.5	0.1	0.5 U	2.5	0.5	0.1 U	0.5	0.1	0.2 U	0.2	0.02	0.1 U	0.5	0.1
1,3,5-Trimethylbenzene	303	0.2 U	0.2	0.02	0.1 U	0.5	0.1	0.5 U	2.5	0.5	0.1 U	0.5	0.1	0.2 U	0.2	0.02	0.1 U	0.5	0.1
Vinyl Acetate	---	1.0 UJ	1.0	0.07	0.2 U	0.5	0.2	1.0 U	2.5	1.0	0.2 U	0.5	0.2	1.0 UJ	1.0	0.07	0.2 U	0.5	0.2
Vinyl Chloride	0.53	**0.8**	0.2	0.06	**0.3**	0.2	0.1	**0.5** J1	1.0	0.5	**0.2**	0.2	0.1	0.2 U	0.2	0.06	0.1 U	0.2	0.1
m,p-Xylene	1300	0.4 U	0.4	0.05	0.1 U	0.5	0.1	0.5 U	2.5	0.5	0.1 U	0.5	0.1	0.4 U	0.4	0.05	0.1 U	0.5	0.1
o-Xylene	1600	0.2 U	0.2	0.04	0.1 U	0.5	0.1	0.5 U	2.5	0.5	0.1 U	0.5	0.1	0.2 U	0.2	0.04	0.1 U	0.5	0.1
2-Chloroethylvinylether	---	1.0 U	1.0	0.25	NA	NA	NA	NA	NA	NA	NA	NA	NA	1.0 U	1.0	0.25	NA	NA	NA
Bromoethane	---	0.2 U	0.2	0.04	NA	NA	NA	NA	NA	NA	NA	NA	NA	0.2 U	0.2	0.04	NA	NA	NA
VOLATILES (µg/L)																			
Method SW8260C-SIM																			
Tetrachloroethene	3.3	0.020 U	0.020	0.0036	0.010 U	0.020	0.010	0.013 UJ2	0.020	0.010	0.010 U	0.020	0.010	0.020 U	0.020	0.0036	0.010 U	0.020	0.010
Vinyl Chloride	0.53	**0.87**	0.020	0.0022	**0.20**	0.020	0.010	**0.53**	0.020	0.010	**0.27**	0.020	0.010	0.020 U	0.020	0.0022	0.010 U	0.020	0.010
Acrylonitrile	0.057	**0.059** M	0.050	0.0158	NA	NA	NA	NA	NA	NA	NA	NA	NA	0.050 U	0.050	0.0158	NA	NA	NA
SEMIVOLATILES (µg/L)																			
Method SW8270D																			
Acenaphthene	120	1.0 U	1.0	0.55	0.09 U	0.5	0.09	0.09 U	0.5	0.09	0.1 U	0.5	0.1	1.0 U	1.0	0.55	0.1 U	0.5	0.1
Acenaphthylene	---	1.0 U	1.0	0.48	0.09 U	0.5	0.09	0.09 U	0.5	0.09	0.1 U	0.5	0.1	1.0 U	1.0	0.48	0.1 U	0.5	0.1
Anthracene	200	1.0 U	1.0	0.53	0.09 U	0.5	0.09	0.09 U	0.5	0.09	0.1 U	0.5	0.1	1.0 U	1.0	0.53	0.1 U	0.5	0.1
Benzo(a)anthracene	0.0018	1.0 U	1.0	0.52	0.09 U	0.5	0.09	0.09 U	0.5	0.09	0.1 U	0.5	0.1	1.0 U	1.0	0.52	0.1 U	0.5	0.1
Benzo(a)pyrene	0.00018	1.0 U	1.0	0.48	0.09 U	0.5	0.09	0.09 U	0.5	0.09	0.1 U	0.5	0.1	1.0 U	1.0	0.48	0.1 U	0.5	0.1
Benzo(b)fluoranthene	0.0018	NA	NA	NA	0.09 U	0.5	0.09	0.09 U	0.5	0.09	0.1 U	0.5	0.1	NA	NA	NA	0.1 U	0.5	0.1
Benzo(g,h,i)perylene	---	1.0 U	1.0	0.55	0.09 U	0.5	0.09	0.09 U	0.5	0.09	0.1 U	0.5	0.1	1.0 U	1.0	0.55	0.1 U	0.5	0.1
Benzo(k)fluoranthene	0.0018	NA	NA	NA	0.09 U	0.5	0.09	0.09 U	0.5	0.09	0.1 U	0.5	0.1	NA	NA	NA	0.1 U	0.5	0.1
Total Benzofluoranthenes	0.0018	1.0 U	1.0	0.48	NA	NA	NA	NA	NA	NA	NA	NA	NA	1.0 U	1.0	0.48	NA	NA	NA
Benzoic Acid	2,240	10 U	10	5.1	6 UJ	14	6	6 U	14	6	6 U	15	6	10 U	10	5.1	6 UJ	14	6
Benzyl Alcohol	182	5.0 U	5.0	2.0	5 U	14	5	5 U	14	5	5 U	15	5	5.0 U	5.0	2.0	5 U	14	5
4-Bromophenyl-phenylether	---	1.0 U	1.0	0.42	0.5 U	1	0.5	0.5 U	0.9	0.5	0.5 U	1	0.5	1.0 U	1.0	0.42	0.5 U	1	0.5
Butylbenzylphthalate	0.41	1.0 U	1.0	0.56	2 U	5	2	2 U	5	2	2 U	5	2	1.0 U	1.0	0.56	2 U	5	2
Di-n-Butylphthalate	47	1.0 U	1.0	0.54	2 U	5	2	2 U	5	2	2 U	5	2	1.0 U	1.0	0.54	2 U	5	2
Carbazole	---	1.0 U	1.0	0.31	0.5 U	1	0.5	0.5 U	0.9	0.5	0.5 U	1	0.5	1.0 U	1.0	0.31	0.5 U	1	0.5
4-Chloro-3-methylphenol	3700	5.0 U	5.0	2.4	0.5 U	1	0.5	0.5 U	0.9	0.5	0.5 U	1	0.5	5.0 U	5.0	2.4	0.5 U	1	0.5
4-Chloroaniline	---	5.0 U	5.0	2.6	0.5 U	1	0.5	0.5 U	0.9	0.5	0.5 U	1	0.5	5.0 U	5.0	2.6	0.5 U	1	0.5
bis(2-Chloroethoxy) Methane	---	1.0 U	1.0	0.56	0.5 U	1	0.5	0.5 U	0.9	0.5	0.5 U	1	0.5	1.0 U	1.0	0.56	0.5 U	1	0.5
Bis-(2-Chloroethyl) Ether	---	1.0 U	1.0	0.58	0.5 U	1	0.5	0.5 U	0.9	0.5	0.5 U	1	0.5	1.0 U	1.0	0.58	0.5 U	1	0.5
2-Chloronaphthalene	---	1.0 U	1.0	0.48	0.4 U	1	0.4	0.4 U	0.9	0.4	0.4 U	1	0.4	1.0 U	1.0	0.48	0.4 U	1	0.4
2-Chlorophenol	---	1.0 U	1.0	0.53	0.5 U	1	0.5	0.5 U	0.9	0.5	0.5 U	1	0.5	1.0 U	1.0	0.53	0.5 U	1	0.5
4-Chlorophenyl-phenylether	---	1.0 U	1.0	0.45	0.5 U	1	0.5	0.5 U	0.9	0.5	0.5 U	1	0.5	1.0 U	1.0	0.45	0.5 U	1	0.5
2,2'-Oxybis(1-Chloropropane)	---	1.0 U	1.0	0.62	0.5 U	1	0.5	0.5 U	0.9	0.5	0.5 U	1	0.5	1.0 U	1.0	0.62	0.5 U	1	0.5
Chrysene	0.018	1.0 U	1.0	0.55	0.09 U	0.5	0.09	0.09 U	0.5	0.09	0.1 U	0.5	0.1	1.0 U	1.0	0.55	0.1 U	0.5	0.1
Dibenz(a,h)anthracene	0.0018	1.0 U	1.0	0.48	0.09 U	0.5	0.09	0.09 U	0.5	0.09	0.1 U	0.5	0.1	1.0 U	1.0	0.48	0.1 U	0.5	0.1
Dibenzofuran	1.3	1.0 U	1.0	0.48	0.5 U	1	0.5	0.5 U	0.9	0.5	0.5 U	1	0.5	1.0 U	1.0	0.48	0.5 U	1	0.5
1,2-Dichlorobenzene	440	1.0 U	1.0	0.36	0.5 U	1	0.5	0.5 U	0.9	0.5	0.5 U	1	0.5	1.0 U	1.0	0.36	0.5 U	1	0.5
1,3-Dichlorobenzene	---	1.0 U	1.0	0.36	0.5 U	1	0.5	0.5 U	0.9	0.5	0.5 U	1	0.5	1.0 U	1.0	0.36	0.5 U	1	0.5
1,4-Dichlorobenzene	1.7	1.0 U	1.0	0.40	0.5 U	1	0.5	0.5 U	0.9	0.5	0.5 U	1	0.5	1.0 U	1.0	0.40	0.5 U	1	0.5
3,3'-Dichlorobenzidine	---	5.0 U	5.0	1.5	2 U	5	2	2 U	5	2	2 U	5	2	5.0 U	5.0	1.5	2 U	5	2
2,4-Dichlorophenol	---	5.0 U	5.0	2.6	0.5 U	1	0.5	0.5 U	0.9	0.5	0.5 U	1	0.5	5.0 U	5.0	2.6	0.5 U	1	0.5
Diethylphthalate	4,236	1.0 U	1.0	0.58	2 U	5	2	2 U	5	2	2 U	5	2	1.0 U	1.0	0.58	2 U	5	2
2,4-Dimethylphenol	660	1.0 U	1.0	0.36	0.5 U	1	0.5	0.5 U	0.9	0.5	0.5 U	1	0.5	1.0 U	1.0	0.36	0.5 U	1	0.5
Dimethylphthalate	1,100,000	1.0 U	1.0	0.53	2 U	5	2	2 U	5	2	2 U	5	2	1.0 U	1.0	0.53	2 U	5	2
4,6-Dinitro-2-Methylphenol	---	10 U	10	3.1	5 U	14	5	5 U	14	5	5 U	15	5	10 U	10	3.1	5 U	14	5
2,4-Dinitrophenol	---	10 U	10	3.5	9 U	28	9	9 U	28	9	10 U	29	10	10 U	10	3.5	10 U	29	10
2,4-Dinitrotoluene	---	5.0 U	5.0	2.5	0.9 U	5	0.9	0.9 U	5	0.9	1 U	5	1	5.0 U	5.0	2.5	1 U	5	1
2,6-Dinitrotoluene	---	5.0 U	5.0	2.4	0.5 U	1	0.5	0.5 U	0.9	0.5	0.5 U	1	0.5	5.0 U	5.0	2.4	0.5 U	1	0.5
bis(2-Ethylhexyl)phthalate	1.2	**1.8**	1.0	1.9	2 U	5	2	2 U	5	2	2 U	5	2	1.0 U	1.0	1.9	2 U	5	2

TABLE L-1
GROUNDWATER ANALYTICAL RESULTS
BOEING ISAACSON-THOMPSON
REMEDIAL INVESTIGATION

Location:		IT-MW-18			IT-MW-18			IT-MW-18			IT-MW-18			IT-MW-19			IT-MW-19		
Laboratory Sample ID:	Preliminary	UA45H/UA54Q/UA55H/UA55P/UB47H/UB47P			6580636/6580637/UM54D			6692731/6692732/6692733/UZ18E			6788045/6788046/6788047/VJ32F			UA44F/UA44N/UA45F/UA45M/UB46F/UB46M			6578919/6578920/UM31C		
Laboratory Data Package ID:	Cleanup	UA45/UA55/UB47			1295735/UM54			1316786/UZ18			1335483/VJ32			UA44/UA45/UB46			1295418/UM31		
Sample Date:	Levels	12/08/2011			3/14/2012			6/18/2012			9/12/2012			12/07/2011			3/13/2012		
		Result	Reporting Limit	Detection Limit	Result	Reporting Limit	Detection Limit	Result	Reporting Limit	Detection Limit	Result	Reporting Limit	Detection Limit	Result	Reporting Limit	Detection Limit	Result	Reporting Limit	Detection Limit
Fluoranthene	11	1.0 U	1.0	0.52	0.09 U	0.5	0.09	0.09 U	0.5	0.09	0.1 U	0.5	0.1	1.0 U	1.0	0.52	0.1 U	0.5	0.1
Fluorene	45	1.0 U	1.0	0.56	0.09 U	0.5	0.09	0.09 U	0.5	0.09	0.1 U	0.5	0.1	1.0 U	1.0	0.56	0.1 U	0.5	0.1
Hexachlorobenzene	---	1.0 U	1.0	0.47	0.09 U	0.5	0.09	0.09 U	0.5	0.09	0.1 U	0.5	0.1	1.0 U	1.0	0.47	0.1 U	0.5	0.1
Hexachlorobutadiene	---	1.0 U	1.0	0.31	0.5 U	1	0.5	0.5 U	0.9	0.5	0.5 U	1	0.5	1.0 U	1.0	0.31	0.5 U	1	0.5
Hexachlorocyclopentadiene	---	5.0 U	5.0	1.2	5 U	14	5	5 U	14	5	5 U	15	5	5.0 U	5.0	1.2	5 U	14	5
Hexachloroethane	---	1.0 U	1.0	0.35	0.9 U	5	0.9	0.9 U	5	0.9	1 U	5	1	1.0 U	1.0	0.35	1 U	5	1
Indeno(1,2,3-cd)pyrene	0.0018	1.0 U	1.0	0.48	0.09 U	0.5	0.09	0.09 U	0.5	0.09	0.1 U	0.5	0.1	1.0 U	1.0	0.48	0.1 U	0.5	0.1
Isophorone	---	1.0 U	1.0	0.48	0.5 U	1	0.5	0.5 U	0.9	0.5	0.5 U	1	0.5	1.0 U	1.0	0.48	0.5 U	1	0.5
1-Methylnaphthalene	2.3	1.0 U	1.0	0.48	0.09 U	0.5	0.09	0.09 U	0.5	0.09	0.1 U	0.5	0.1	1.0 U	1.0	0.48	0.1 U	0.5	0.1
2-Methylnaphthalene	64	1.0 U	1.0	0.48	0.09 U	0.5	0.09	0.09 U	0.5	0.09	0.1 U	0.5	0.1	1.0 U	1.0	0.48	0.1 U	0.5	0.1
2-Methylphenol	3100	1.0 U	1.0	0.53	0.5 U	1	0.5	0.5 U	0.9	0.5	0.5 U	1	0.5	1.0 U	1.0	0.53	0.5 U	1	0.5
4-Methylphenol	330	1.0 U	1.0	0.52	0.5 U	1	0.5	0.5 U	0.9	0.5	0.5 U	1	0.5	1.0 U	1.0	0.52	0.5 U	1	0.5
Naphthalene	26	1.0 U	1.0	0.52	**0.1** J	0.5	0.09	0.09 U	0.5	0.09	**0.2** J1	0.5	0.1	1.0 U	1.0	0.52	0.1 U	0.5	0.1
2-Nitroaniline	---	5.0 U	5.0	2.6	0.5 U	1	0.5	0.5 U	0.9	0.5	0.5 U	1	0.5	5.0 U	5.0	2.6	0.5 U	1	0.5
3-Nitroaniline	---	5.0 U	5.0	2.3	0.5 U	1	0.5	0.5 U	0.9	0.5	0.5 U	1	0.5	5.0 U	5.0	2.3	0.5 U	1	0.5
4-Nitroaniline	---	5.0 U	5.0	2.2	0.5 U	1	0.5	0.5 U	0.9	0.5	0.5 U	1	0.5	5.0 U	5.0	2.2	0.5 U	1	0.5
Nitrobenzene	---	1.0 U	1.0	0.58	0.5 U	1	0.5	0.5 U	0.9	0.5	0.5 U	1	0.5	1.0 U	1.0	0.58	0.5 U	1	0.5
2-Nitrophenol	---	5.0 U	5.0	2.0	0.5 U	1	0.5	0.5 U	0.9	0.5	0.5 U	1	0.5	5.0 U	5.0	2.0	0.5 U	1	0.5
4-Nitrophenol	---	5.0 U	5.0	2.6	9 U	28	9	9 U	28	9	10 U	29	10	5.0 U	5.0	2.6	10 U	29	10
N-Nitroso-Di-N-Propylamine	---	1.0 U	1.0	0.56	0.5 U	1	0.5	0.5 U	0.9	0.5	0.5 U	1	0.5	1.0 U	1.0	0.56	0.5 U	1	0.5
N-Nitrosodiphenylamine	1.96	1.0 U	1.0	0.46	0.5 U	1	0.5	0.5 U	0.9	0.5	0.5 U	1	0.5	1.0 U	1.0	0.46	0.5 U	1	0.5
Di-n-Octyl phthalate	---	1.0 U	1.0	0.51	2 U	5	2	2 U	5	2	2 U	5	2	1.0 U	1.0	0.51	2 U	5	2
Pentachlorophenol	---	5.0 U	5.0	2.4	0.9 U	5	0.9	0.9 U	5	0.9	1 U	5	1	5.0 U	5.0	2.4	1 U	5	1
Phenanthrene	---	1.0 U	1.0	0.56	0.09 U	0.5	0.09	0.09 U	0.5	0.09	0.1 U	0.5	0.1	1.0 U	1.0	0.56	0.1 U	0.5	0.1
Phenol	41,000	1.0 U	1.0	0.52	0.5 U	1	0.5	0.5 U	0.9	0.5	0.5 U	1	0.5	1.0 U	1.0	0.52	0.5 U	1	0.5
Pyrene	9.8	1.0 U	1.0	0.55	0.09 U	0.5	0.09	0.09 UJ	0.5	0.09	0.1 U	0.5	0.1	1.0 U	1.0	0.55	0.1 U	0.5	0.1
1,2,4-Trichlorobenzene	1.13	1.0 U	1.0	0.38	0.5 U	1	0.5	0.5 U	0.9	0.5	0.5 U	1	0.5	1.0 U	1.0	0.38	0.5 U	1	0.5
2,4,5-Trichlorophenol	---	5.0 U	5.0	2.2	0.5 U	1	0.5	0.5 U	0.9	0.5	0.5 U	1	0.5	5.0 U	5.0	2.2	0.5 U	1	0.5
2,4,6-Trichlorophenol	---	5.0 U	5.0	2.4	0.5 U	1	0.5	0.5 U	0.9	0.5	0.5 U	1	0.5	5.0 U	5.0	2.4	0.5 U	1	0.5
cPAHs (µg/L)																			
Method SW8270D-SIM																			
Benzo(a)anthracene	0.0018	0.010 U	0.010	0.0063	0.0049 U	0.0099	0.0049	0.0048 UJ	0.0095	0.0048	0.0049 U	0.0098	0.0049	0.010 U	0.010	0.0063	0.0049 U	0.0099	0.0049
Benzo(a)pyrene	0.00018	0.010 U	0.010	0.0048	0.0049 U	0.0099	0.0049	0.0048 UJ	0.0095	0.0048	0.0049 U	0.0098	0.0049	0.010 U	0.010	0.0048	0.0049 U	0.0099	0.0049
Benzo(b)fluoranthene	0.0018	NA	NA	NA	0.0049 U	0.0099	0.0049	0.0048 UJ	0.0095	0.0048	0.0049 U	0.0098	0.0049	NA	NA	NA	0.0049 U	0.0099	0.0049
Benzo(k)fluoranthene	0.0018	NA	NA	NA	0.0049 U	0.0099	0.0049	0.0048 UJ	0.0095	0.0048	0.0049 U	0.0098	0.0049	NA	NA	NA	0.0049 U	0.0099	0.0049
Total Benzofluoranthenes	0.0018	0.020 U	0.020	0.0099	NA	NA	NA	NA	NA	NA	NA	NA	NA	0.020 UJ	0.020	0.0099	NA	NA	NA
Chrysene	0.018	0.010 U	0.010	0.0046	0.0049 U	0.0099	0.0049	0.0048 UJ	0.0095	0.0048	0.0049 U	0.0098	0.0049	0.010 U	0.010	0.0046	0.0049 U	0.0099	0.0049
Dibenz(a,h)anthracene	0.0018	0.010 U	0.010	0.0048	0.0040 U	0.0099	0.0040	0.0038 UJ	0.0095	0.0038	0.0039 U	0.0098	0.0039	0.010 U	0.010	0.0048	0.0040 U	0.0099	0.0040
Indeno(1,2,3-cd)pyrene	0.0018	0.010 U	0.010	0.0046	0.0040 U	0.0099	0.0040	0.0038 UJ	0.0095	0.0038	0.0039 U	0.0098	0.0039	0.010 U	0.010	0.0046	0.0040 U	0.0099	0.0040
Pyrene	9.8	NA	NA	NA	0.0099 U	0.049	0.0099	0.0095 UJ	0.047	0.0095	0.0098 U	0.049	0.0098	NA	NA	NA	0.0099 U	0.049	0.0099
cPAH TEQ	0.00018	ND	NA	NA	ND	NA	NA	ND	NA	NA	ND	NA	NA	ND	NA	NA	ND	NA	NA
PCBs (µg/L)																			
Method SW8082																			
Aroclor 1016	0.000023	0.010 U	0.010	0.0025	0.0057 U	0.0095	0.0057	0.0057 U	0.0095	0.0057	0.0058 U	0.0096	0.0058	0.010 U	0.010	0.0025	0.0057 U	0.0095	0.0057
Aroclor 1221	---	0.010 U	0.010	0.0028	0.0057 U	0.0095	0.0057	0.0057 U	0.0095	0.0057	0.0058 U	0.0096	0.0058	0.010 U	0.010	0.0028	0.0057 U	0.0095	0.0057
Aroclor 1232	---	0.010 U	0.010	0.0028	0.0067 U	0.0095	0.0067	0.0066 U	0.0095	0.0066	0.0067 U	0.0096	0.0067	0.010 U	0.010	0.0028	0.0067 U	0.0095	0.0067
Aroclor 1242	0.000023	0.010 U	0.010	0.0028	0.0057 U	0.0095	0.0057	0.0057 U	0.0095	0.0057	0.0058 U	0.0096	0.0058	0.010 U	0.010	0.0028	0.0057 U	0.0095	0.0057
Aroclor 1248	0.000023	0.010 U	0.010	0.0028	0.0048 U	0.0095	0.0048	0.0047 U	0.0095	0.0047	0.0048 U	0.0096	0.0048	0.010 U	0.010	0.0028	0.0048 U	0.0095	0.0048
Aroclor 1254	0.0000055	0.010 U	0.010	0.0028	0.0048 U	0.0095	0.0048	0.0047 U	0.0095	0.0047	0.0048 U	0.0096	0.0048	0.010 U	0.010	0.0028	0.0048 U	0.0095	0.0048
Aroclor 1260	0.000023	0.010 U	0.010	0.0028	0.0048 U	0.0095	0.0048	0.0047 U	0.0095	0.0047	0.0048 U	0.0096	0.0048	0.010 U	0.010	0.0028	0.0048 U	0.0095	0.0048
Total PCBs	0.000023	ND	NA	NA	ND	NA	NA	ND	NA	NA	ND	NA	NA	ND	NA	NA	ND	NA	NA

TABLE L-1
GROUNDWATER ANALYTICAL RESULTS
BOEING ISAACSON-THOMPSON
REMEDIAL INVESTIGATION

Location:		IT-MW-18			IT-MW-18			IT-MW-18			IT-MW-18			IT-MW-19			IT-MW-19		
Laboratory Sample ID:	Preliminary	UA45H/UA54Q/UA55H/UA55P/UB47H/UB47P			6580636/6580637/UM54D			6692731/6692732/6692733/UZ18E			6788045/6788046/6788047/VJ32F			UA44F/UA44N/UA45F/UA45M/UB46F/UB46M			6578919/6578920/UM31C		
Laboratory Data Package ID:	Cleanup	UA45/UA55/UB47			1295735/UM54			1316786/UZ18			1335483/VJ32			UA44/UA45/UB46			1295418/UM31		
Sample Date:	Levels	12/08/2011			3/14/2012			6/18/2012			9/12/2012			12/07/2011			3/13/2012		
		Result	Reporting Limit	Detection Limit	Result	Reporting Limit	Detection Limit	Result	Reporting Limit	Detection Limit	Result	Reporting Limit	Detection Limit	Result	Reporting Limit	Detection Limit	Result	Reporting Limit	Detection Limit
TOTAL PETROLEUM HYDROCARBONS (mg/L)																			
NWTPH-Dx																			
Diesel-Range Organics	0.5	0.10 U	0.10	0.022	0.069 U	0.25	0.069	0.028 U	0.095	0.025	0.029 U	0.095	0.029	0.10 U	0.10	0.022	0.067 U	0.24	0.067
Oil-Range Organics	0.5	0.20 U	0.20	0.044	0.99 U	3.0	0.99	0.066 U	0.240	0.066	0.067 U	0.240	0.067	0.20 U	0.20	0.044	0.96 U	2.9	0.96
NWTPH-G																			
Gasoline-Range Organics	1.0/0.8	0.25 U	0.25	0.06	0.05 U	0.25	0.05	0.05 U	0.25	0.05	0.05 U	0.25	0.05	0.25 U	0.25	0.06	0.05 U	0.25	0.05
TOTAL METALS (µg/L)																			
Method 200.8																			
Antimony	---	0.2 U	0.2	0.010	0.42 U	1.0	0.42	0.33 U	1.0	0.33	0.33 U	1.0	0.33	**0.8**	0.2	0.010	0.42 U	1.0	0.42
Arsenic	---	**3600**	10	2.4	**2490**	2.0	0.95	**4890**	2.0	2.0	**6610**	20.0	4.0	**154**	0.2	0.048	**49.1**	2.0	0.95
Barium	---	**12.9**	0.5	0.020	**14.4**	2.0	0.69	**14.0**	2.0	0.41	**11.0**	2.0	0.41	**18.4**	0.5	0.020	**15.1**	2.0	0.69
Beryllium	---	0.2 U	0.2	0.021	0.13 U	0.50	0.13	**0.11** J1	0.50	0.025	**0.15** J1	0.50	0.025	0.2 U	0.2	0.021	0.13 U	0.50	0.13
Cadmium	---	0.1 U	0.1	0.010	0.20 U	0.50	0.20	0.048 U	0.50	0.048	0.082 U	0.50	0.082	0.1 U	0.1	0.010	0.20 U	0.50	0.20
Chromium	---	**2.1**	0.5	0.045	**4.4**	2.0	0.60	**6.8**	2.0	0.10	**7.1**	2.0	0.50	0.5 U	0.5	0.045	0.60 U	2.0	0.60
Copper	---	**8.2**	0.5	0.158	**6.4**	2.0	0.38	**6.2**	2.0	0.15	**13.0**	2.0	0.40	**3.0**	0.5	0.158	**3.5**	2.0	0.38
Lead	---	**0.2**	0.1	0.046	**0.64** J1	1.0	0.080	**0.56** J1	1.0	0.034	**0.78** J1	1.0	0.034	0.1 U	0.1	0.046	0.080 U	1.0	0.080
Nickel	---	**3.4**	0.5	0.079	**1.7** J1	2.0	0.50	**3.0**	2.0	0.13	**2.8**	2.0	0.35	**3.8**	0.5	0.079	**2.2** J	2.0	0.50
Selenium	---	0.5 U	0.5	0.127	0.27 U	2.0	0.27	**0.23** J1	2.0	0.18	0.50 U	2.0	0.50	**0.6**	0.5	0.127	0.27 U	2.0	0.27
Silver	---	0.2 U	0.2	0.008	0.098 U	0.50	0.098	0.10 U	0.50	0.10	0.10 U	0.50	0.10	0.2 U	0.2	0.008	0.098 U	0.50	0.098
Thallium	---	0.2 U	0.2	0.004	0.15 U	0.50	0.15	0.029 U	0.50	0.029	0.15 U	0.50	0.15	0.2 U	0.2	0.004	0.15 U	0.50	0.15
Zinc	---	**122**	4	0.50	**75.0**	15.0	4.0	**56.4**	15.0	1.1	**31.3**	15.0	1.1	**8**	4	0.50	4.0 U	15.0	4.0
Method SW7196A (mg/L)																			
Chromium VI	0.00058	0.010 U	0.010	0.00300	0.010 U	0.010	0.00300	0.010 U	0.010	0.00300	0.010 U	0.010	0.00300	0.010 U	0.010	0.00300	0.010 U	0.010	0.00300
Method SW7470A/EPA 1631E (ng/L)																			
Mercury	12	20.0 U	20.0	2.60	**5.60**	5.00	1.60	**9.25** J1	10.0	3.2	**10.7**	10.0	3.20	20.0 U	20.0	2.60	1.60 U	5.00	1.60
DISSOLVED METALS (µg/L)																			
Methods 200.8/SW7196A																			
Antimony	150	0.2 U	0.2	0.010	0.42 U	1.0	0.42	0.33 U	1.0	0.33	0.33 U	1.0	0.33	**0.8**	0.2	0.010	**0.43** J1	1.0	0.42
Arsenic	8	**3870**	10	2.4	**2980**	2.0	0.95	**5770**	2.0	2.0	**6650**	20.0	4.0	**179**	0.5	0.120	**45.4**	2.0	0.95
Barium	770	**12.2**	0.5	0.020	**9.9**	2.0	0.69	**12.7**	2.0	0.41	**12.4**	2.0	0.41	**17.8**	0.5	0.020	**15.7**	2.0	0.69
Beryllium	12	0.2 U	0.2	0.021	0.13 U	0.50	0.13	**0.079** J1	0.50	0.025	**0.10** J1	0.50	0.025	0.2 U	0.2	0.021	0.13 U	0.50	0.13
Cadmium	0.25	0.1 U	0.1	0.010	0.20 U	0.50	0.20	0.048 U	0.50	0.048	0.082 U	0.50	0.082	0.1 U	0.1	0.010	0.20 U	0.50	0.20
Chromium	74	**2**	1	0.11	**3.6**	2.0	0.60	**7.0**	2.0	0.10	**6.7**	2.0	0.50	**0.8**	0.5	0.045	0.60 U	2.0	0.60
Copper	8	**0.8**	0.5	0.158	0.38 U	2.0	0.38	**0.30** J1	2.0	0.15	0.91 UJ2	2.0	0.40	**2.6**	0.5	0.158	**3.3**	2.0	0.38
Lead	2.5	0.1 U	0.1	0.046	0.080 U	1.0	0.080	**0.038** J1	1.0	0.034	**0.080** J1	1.0	0.034	0.1 U	0.1	0.046	0.080 U	1.0	0.080
Nickel	8.2	**3.3**	0.5	0.079	**1.3** J1	2.0	0.50	**3.1**	2.0	0.13	**2.6**	2.0	0.35	**4.3**	0.5	0.079	**1.9** J, J1	2.0	0.50
Selenium	5	0.5 U	0.5	0.127	0.27 U	2.0	0.27	**0.19** J1	2.0	0.18	0.50 U	2.0	0.50	0.5 U	0.5	0.127	0.27 U	2.0	0.27
Silver	22	0.2 U	0.2	0.008	0.098 U	0.50	0.098	0.10 U	0.50	0.10	0.10 U	0.50	0.10	0.2 U	0.2	0.008	0.098 U	0.50	0.098
Thallium	0.47	0.2 U	0.2	0.004	0.15 U	0.50	0.15	0.029 U	0.50	0.029	0.15 U	0.50	0.15	0.2 U	0.2	0.004	0.15 U	0.50	0.15
Zinc	56	**126**	4	0.50	**58.7**	15.0	4.0	**58.4**	15.0	1.1	**17.6**	15.0	1.1	**9**	4	0.50	4.0 U	15.0	4.0
Method SW7470A/EPA 1631E (ng/L)																			
Mercury	12	20.0 U	20.0	2.60	**1.68** J1	5.00	1.60	3.20 U	10.0	3.2	3.20 U	10.0	3.20	20.0 U	20.0	2.60	3.20 U	10.0	3.20
CONVENTIONALS (mg/L)																			
Chloride (Method 300.0)	---	NA	NA	NA	NA	NA	NA	**6.7**	2.0	1.0	**7.3**	2.0	1.0	NA	NA	NA	NA	NA	NA
Nitrate (Method 300.0)	---	**0.3**	0.1	0.007	0.050 U	0.10	0.050	0.050 U	0.10	0.050	0.050 U	0.10	0.050	**0.1**	0.1	0.007	**0.084** J1	0.10	0.050
Sulfate (Method 300.0)	---	**1.4**	0.1	0.059	**49.9**	5.0	1.5	**32.2**	5.0	1.5	**43.5**	5.0	1.5	**133**	5.0	2.95	**81.2**	25.0	7.5
Total Dissolved Solids (Method 160.1)	---	**360**	5.0	5.00	**580**	60.0	19.4	**480** J	60.0	19.4	**510**	60.0	19.4	**718**	10.0	10.0	**674**	120	38.8
FIELD PARAMETERS																			
Temperature (°C)	---	15.26	NA	NA	13.04	NA	NA	14.49	NA	NA	16.08	NA	NA	14.97	NA	NA	13.10	NA	NA
Conductivity (uS/cm)	---	634	NA	NA	847	NA	NA	580	NA	NA	607	NA	NA	727	NA	NA	903	NA	NA
Dissolved Oxygen (mg/L)	---	0.69	NA	NA	0.50	NA	NA	0.53	NA	NA	0.39	NA	NA	1.74	NA	NA	4.00	NA	NA
pH (SU)	---	6.23	NA	NA	5.30	NA	NA	7.04	NA	NA	7.22	NA	NA	7.49	NA	NA	6.57	NA	NA
ORP (mV)	---	-65.2	NA	NA	-158.3	NA	NA	-108.8	NA	NA	-127.2	NA	NA	8.9	NA	NA	145.7	NA	NA
Turbidity (NTU)	---	6.64	NA	NA	10	NA	NA	299.9	NA	NA	9.09	NA	NA	0.42	NA	NA	2.81	NA	NA
Ferrous Iron (mg/L)	---	NA	NA	NA	1.6	NA	NA	2.6	NA	NA	2.6	NA	NA	NA	NA	NA	0.0	NA	NA

TABLE L-1
GROUNDWATER ANALYTICAL RESULTS
BOEING ISAACSON-THOMPSON
REMEDIAL INVESTIGATION

Location:		IT-MW-19			IT-MW-19			IT-MW-20			IT-MW-20			IT-MW-20			IT-MW-20		
Laboratory Sample ID:	Preliminary	6689143/6689144/6689145/UY55I			6788039/6788040/6788041/VJ32D			UA54E/UA54N/UA55E/UA55M/UB47E/UB47M			6578915/6578916/UM31A			6689131/6689132/6689133/UY55A			6788030/6788031/6788032/VJ32A		
Laboratory Data Package ID:	Cleanup	1316071/UY55			1335483/VJ32			UA54/UA55/UB47			1295418/UM31			1316071/UY55			1335483/VJ32		
Sample Date:	Levels	6/14/2012			9/12/2012			12/08/2011			3/13/2012			6/14/2012			9/12/2012		
		Result	Reporting Limit	Detection Limit	Result	Reporting Limit	Detection Limit	Result	Reporting Limit	Detection Limit	Result	Reporting Limit	Detection Limit	Result	Reporting Limit	Detection Limit	Result	Reporting Limit	Detection Limit
VOLATILES (µg/L)																			
Method SW8260C																			
Acetone	110,000	3.0 U	5.0	3.0	3.0 U	5.0	3.0	5.0 U	5.0	2.1	3.0 U	5.0	3.0	3.0 U	5.0	3.0	3.0 U	5.0	3.0
Acrolein	---	5.0 U	25	5.0	5.0 U	25	5.0	5.0 UJ	5.0	2.5	5.0 U	25	5.0	5.0 U	25	5.0	5.0 U	25	5.0
Acrylonitrile	0.057	1.0 U	5.0	1.0	1.0 U	5.0	1.0	1.0 U	1.0	0.60	1.0 U	5.0	1.0	1.0 U	5.0	1.0	1.0 U	5.0	1.0
Benzene	2	0.1 U	0.2	0.1	0.1 U	0.2	0.1	0.2 U	0.2	0.03	0.1 U	0.2	0.1	0.1 U	0.2	0.1	0.1 U	0.2	0.1
Bromobenzene	---	0.1 U	0.5	0.1	0.1 U	0.5	0.1	0.2 U	0.2	0.06	0.1 U	0.5	0.1	0.1 U	0.5	0.1	0.1 U	0.5	0.1
Bromochloromethane	---	0.1 U	0.5	0.1	0.1 U	0.5	0.1	0.2 U	0.2	0.06	0.1 U	0.5	0.1	0.1 U	0.5	0.1	0.1 U	0.5	0.1
Bromodichloromethane	17	0.1 U	0.5	0.1	0.1 U	0.5	0.1	0.2 U	0.2	0.05	0.1 U	0.5	0.1	0.1 U	0.5	0.1	0.1 U	0.5	0.1
Bromoform	---	0.1 U	0.5	0.1	0.1 U	0.5	0.1	0.2 U	0.2	0.06	0.1 U	0.5	0.1	0.1 U	0.5	0.1	0.1 U	0.5	0.1
Bromomethane	---	0.1 U	0.5	0.1	0.1 U	0.5	0.1	1.0 U	1.0	0.25	0.1 U	0.5	0.1	0.1 U	0.5	0.1	0.1 U	0.5	0.1
2-Butanone	73,000	1.0 U	5.0	1.0	1.0 U	5.0	1.0	5.0 UJ	5.0	0.81	1.0 U	5.0	1.0	1.0 U	5.0	1.0	1.0 U	5.0	1.0
n-Butylbenzene	780	0.1 U	0.5	0.1	0.1 U	0.5	0.1	0.2 U	0.2	0.02	0.1 U	0.5	0.1	0.1 U	0.5	0.1	0.1 U	0.5	0.1
sec-Butylbenzene	---	0.1 U	0.5	0.1	0.1 U	0.5	0.1	0.2 U	0.2	0.02	0.1 U	0.5	0.1	0.1 U	0.5	0.1	0.1 U	0.5	0.1
tert-Butylbenzene	---	0.1 U	0.5	0.1	0.1 U	0.5	0.1	0.2 U	0.2	0.03	0.1 U	0.5	0.1	0.1 U	0.5	0.1	0.1 U	0.5	0.1
Carbon Disulfide	3900	0.4 U	0.5	0.4	0.4 U	0.5	0.4	0.2 U	0.2	0.04	0.4 U	0.5	0.4	0.4 U	0.5	0.4	0.4 U	0.5	0.4
Carbon Tetrachloride	0.46	0.1 U	0.2	0.1	0.1 U	0.2	0.1	0.2 U	0.2	0.04	0.1 U	0.2	0.1	0.1 U	0.2	0.1	0.1 U	0.2	0.1
Chlorobenzene	270	0.1 U	0.5	0.1	0.1 U	0.5	0.1	0.2 U	0.2	0.02	0.1 U	0.5	0.1	0.1 U	0.5	0.1	0.1 U	0.5	0.1
Chloroethane	21,000	0.1 U	0.5	0.1	0.1 U	0.5	0.1	0.2 U	0.2	0.09	0.1 U	0.5	0.1	0.1 U	0.5	0.1	0.1 U	0.5	0.1
Chloroform	9.4	0.1 U	0.2	0.1	0.1 U	0.2	0.1	0.2 U	0.2	0.03	0.1 U	0.2	0.1	0.1 U	0.2	0.1	0.1 U	0.2	0.1
Chloromethane	10.3	0.2 U	0.5	0.2	0.2 U	0.5	0.2	0.5 U	0.5	0.10	0.2 U	0.5	0.2	0.2 U	0.5	0.2	0.2 U	0.5	0.2
2-Chlorotoluene	---	0.1 U	0.5	0.1	0.1 U	0.5	0.1	0.2 U	0.2	0.02	0.1 U	0.5	0.1	0.1 U	0.5	0.1	0.1 U	0.5	0.1
4-Chlorotoluene	2600	0.1 U	0.5	0.1	0.1 U	0.5	0.1	0.2 U	0.2	0.02	0.1 U	0.5	0.1	0.1 U	0.5	0.1	0.1 U	0.5	0.1
1,2-Dibromo-3-chloropropane	---	0.2 U	0.5	0.2	0.2 U	0.5	0.2	0.5 U	0.5	0.04	0.2 U	0.5	0.2	0.2 U	0.5	0.2	0.2 U	0.5	0.2
Dibromochloromethane	---	0.1 U	0.5	0.1	0.1 U	0.5	0.1	0.2 U	0.2	0.05	0.1 U	0.5	0.1	0.1 U	0.5	0.1	0.1 U	0.5	0.1
Dibromomethane	---	0.1 U	0.5	0.1	0.1 U	0.5	0.1	0.2 U	0.2	0.14	0.1 U	0.5	0.1	0.1 U	0.5	0.1	0.1 U	0.5	0.1
trans-1,4-Dichloro-2-butene	---	1.0 U	5.0	1.0	1.0 U	5.0	1.0	1.0 UJ	1.0	0.32	1.0 U	5.0	1.0	1.0 U	5.0	1.0	1.0 U	5.0	1.0
1,2-Dichlorobenzene	440	0.1 U	0.5	0.1	0.1 U	0.5	0.1	0.2 U	0.2	0.04	0.1 U	0.5	0.1	0.1 U	0.5	0.1	0.1 U	0.5	0.1
1,3-Dichlorobenzene	960	0.1 U	0.5	0.1	0.1 U	0.5	0.1	0.2 U	0.2	0.04	0.1 U	0.5	0.1	0.1 U	0.5	0.1	0.1 U	0.5	0.1
1,4-Dichlorobenzene	1.7	0.1 U	0.5	0.1	0.1 U	0.5	0.1	0.2 U	0.2	0.04	0.1 U	0.5	0.1	0.1 U	0.5	0.1	0.1 U	0.5	0.1
1,1-Dichloroethane	33	0.1 U	0.5	0.1	0.1 U	0.5	0.1	0.2 U	0.2	0.05	0.1 U	0.5	0.1	0.1 U	0.5	0.1	0.1 U	0.5	0.1
1,2-Dichloroethane	3.6	0.1 U	0.2	0.1	0.1 U	0.2	0.1	0.2 U	0.2	0.07	0.1 U	0.2	0.1	0.1 U	0.2	0.1	0.1 U	0.2	0.1
1,1-Dichloroethene	3.2	0.1 U	0.2	0.1	0.1 U	0.2	0.1	0.2 U	0.2	0.05	0.1 U	0.2	0.1	0.1 U	0.2	0.1	0.1 U	0.2	0.1
cis-1,2-Dichloroethene	130	0.1 U	0.2	0.1	0.1 U	0.2	0.1	0.2 U	0.2	0.04	0.1 U	0.2	0.1	0.1 U	0.2	0.1	0.1 U	0.2	0.1
trans-1,2-Dichloroethene	940	0.1 U	0.2	0.1	0.1 U	0.2	0.1	0.2 U	0.2	0.05	0.1 U	0.2	0.1	0.1 U	0.2	0.1	0.1 U	0.2	0.1
1,2-Dichloropropane	3.7	0.1 U	0.5	0.1	0.1 U	0.5	0.1	0.2 U	0.2	0.04	0.1 U	0.5	0.1	0.1 U	0.5	0.1	0.1 U	0.5	0.1
1,3-Dichloropropane	---	0.1 U	0.5	0.1	0.1 U	0.5	0.1	0.2 U	0.2	0.06	0.1 U	0.5	0.1	0.1 U	0.5	0.1	0.1 U	0.5	0.1
2,2-Dichloropropane	---	0.1 U	0.5	0.1	0.1 U	0.5	0.1	0.2 U	0.2	0.05	0.1 U	0.5	0.1	0.1 U	0.5	0.1	0.1 U	0.5	0.1
1,1-Dichloropropene	---	0.1 U	0.5	0.1	0.1 U	0.5	0.1	0.2 U	0.2	0.03	0.1 U	0.5	0.1	0.1 U	0.5	0.1	0.1 U	0.5	0.1
cis-1,3-Dichloropropene	---	0.1 U	0.2	0.1	0.1 U	0.2	0.1	0.2 U	0.2	0.06	0.1 U	0.2	0.1	0.1 U	0.2	0.1	0.1 U	0.2	0.1
trans-1,3-Dichloropropene	---	0.1 U	0.2	0.1	0.1 U	0.2	0.1	0.2 U	0.2	0.08	0.1 U	0.2	0.1	0.1 U	0.2	0.1	0.1 U	0.2	0.1
Ethylbenzene	1.7	0.1 U	0.5	0.1	0.1 U	0.5	0.1	0.2 U	0.2	0.04	0.1 U	0.5	0.1	0.1 U	0.5	0.1	0.1 U	0.5	0.1
Ethylene Dibromide	---	0.1 U	0.5	0.1	0.1 U	0.5	0.1	0.2 U	0.2	0.08	0.1 U	0.5	0.1	0.1 U	0.5	0.1	0.1 U	0.5	0.1
Hexachlorobutadiene	---	0.1 U	0.5	0.1	0.1 U	0.5	0.1	0.5 U	0.5	0.07	0.1 U	0.5	0.1	0.1 U	0.5	0.1	0.1 U	0.5	0.1
2-Hexanone	3200	1.0 U	5.0	1.0	1.0 U	5.0	1.0	5.0 U	5.0	0.90	1.0 U	5.0	1.0	1.0 U	5.0	1.0	1.0 U	5.0	1.0
Isopropylbenzene	270	0.1 U	0.5	0.1	0.1 U	0.5	0.1	0.2 U	0.2	0.02	0.1 U	0.5	0.1	0.1 U	0.5	0.1	0.1 U	0.5	0.1
4-Isopropyltoluene	---	0.1 U	0.5	0.1	0.1 U	0.5	0.1	0.2 U	0.2	0.03	0.1 U	0.5	0.1	0.1 U	0.5	0.1	0.1 U	0.5	0.1
Methyl Iodide	---	0.1 UJ	0.5	0.1	0.1 U	0.5	0.1	1.0 U	1.0	0.23	0.1 U	0.5	0.1	0.1 UJ	0.5	0.1	0.1 U	0.5	0.1
4-Methyl-2-Pentanone (MIBK)	19,000	1.0 U	5.0	1.0	1.0 U	5.0	1.0	5.0 U	5.0	0.97	1.0 U	5.0	1.0	1.0 U	5.0	1.0	1.0 U	5.0	1.0
Methylene Chloride	230	0.2 U	0.5	0.2	0.2 U	0.5	0.2	0.5 U	0.5	0.48	0.2 U	0.5	0.2	0.2 U	0.5	0.2	0.2 U	0.5	0.2
Naphthalene	26	0.1 U	0.5	0.1	0.1 U	0.5	0.1	0.5 U	0.5	0.12	0.1 U	0.5	0.1	0.1 U	0.5	0.1	0.1 U	0.5	0.1
n-Propylbenzene	530	0.1 U	0.5	0.1	0.1 U	0.5	0.1	0.2 U	0.2	0.02	0.1 U	0.5	0.1	0.1 U	0.5	0.1	0.1 U	0.5	0.1
Styrene	77,000	0.1 U	0.5	0.1	0.1 U	0.5	0.1	0.2 U	0.2	0.04	0.1 U	0.5	0.1	0.1 U	0.5	0.1	0.1 U	0.5	0.1
1,1,1,2-Tetrachloroethane	---	0.1 U	0.5	0.1	0.1 U	0.5	0.1	0.2 U	0.2	0.04	0.1 U	0.5	0.1	0.1 U	0.5	0.1	0.1 U	0.5	0.1
1,1,2,2-Tetrachloroethane	0.33	0.1 U	0.2	0.1	0.1 U	0.2	0.1	0.2 U	0.2	0.06	0.1 U	0.2	0.1	0.1 U	0.2	0.1	0.1 U	0.2	0.1
Tetrachloroethene	3.3	0.1 U	0.2	0.1	0.1 U	0.2	0.1	0.2 U	0.2	0.05	0.1 U	0.2	0.1	0.1 U	0.2	0.1	0.1 U	0.2	0.1
Toluene	1300	0.1 U	0.2	0.1	0.1 U	0.2	0.1	0.2 U	0.2	0.04	0.1 U	0.2	0.1	0.1 U	0.2	0.1	0.1 U	0.2	0.1
1,1,2-Trichloro-1,2,2-trifuoroethane	59,000	0.2 U	0.5	0.2	0.2 U	0.5	0.2	0.2 U	0.2	0.04	0.2 U	0.5	0.2	0.2 U	0.5	0.2	0.2 U	0.5	0.2
1,2,3-Trichlorobenzene	---	0.1 U	0.5	0.1	0.1 U	0.5	0.1	0.5 U	0.5	0.11	0.1 U	0.5	0.1	0.1 U	0.5	0.1	0.1 U	0.5	0.1

TABLE L-1
GROUNDWATER ANALYTICAL RESULTS
BOEING ISAACSON-THOMPSON
REMEDIAL INVESTIGATION

Location:		IT-MW-19			IT-MW-19			IT-MW-20			IT-MW-20			IT-MW-20			IT-MW-20		
Laboratory Sample ID:	Preliminary	6689143/6689144/6689145/UY55I			6788039/6788040/6788041/VJ32D			UA54E/UA54N/UA55E/UA55M/UB47E/UB47M			6578915/6578916/UM31A			6689131/6689132/6689133/UY55A			6788030/6788031/6788032/VJ32A		
Laboratory Data Package ID:	Cleanup	1316071/UY55			1335483/VJ32			UA54/UA55/UB47			1295418/UM31			1316071/UY55			1335483/VJ32		
Sample Date:	Levels	6/14/2012			9/12/2012			12/08/2011			3/13/2012			6/14/2012			9/12/2012		
		Result	Reporting Limit	Detection Limit	Result	Reporting Limit	Detection Limit	Result	Reporting Limit	Detection Limit	Result	Reporting Limit	Detection Limit	Result	Reporting Limit	Detection Limit	Result	Reporting Limit	Detection Limit
1,2,4-Trichlorobenzene	1.13	0.1 U	0.5	0.1	0.1 U	0.5	0.1	0.5 U	0.5	0.11	0.1 U	0.5	0.1	0.1 U	0.5	0.1	0.1 U	0.5	0.1
1,1,1-Trichloroethane	46,000	0.1 U	0.5	0.1	0.1 U	0.5	0.1	0.2 U	0.2	0.04	0.1 U	0.5	0.1	0.1 U	0.5	0.1	0.1 U	0.5	0.1
1,1,2-Trichloroethane	2.3	0.1 U	0.2	0.1	0.1 U	0.2	0.1	0.2 U	0.2	0.13	0.1 U	0.2	0.1	0.1 U	0.2	0.1	0.1 U	0.2	0.1
Trichloroethene	1.4	0.1 U	0.2	0.1	0.1 U	0.2	0.1	0.2 U	0.2	0.05	0.1 U	0.2	0.1	0.1 U	0.2	0.1	0.1 U	0.2	0.1
Trichlorofluoromethane	6900	0.1 U	0.5	0.1	0.1 U	0.5	0.1	0.2 U	0.2	0.04	0.1 U	0.5	0.1	0.1 U	0.5	0.1	0.1 U	0.5	0.1
1,2,3-Trichloropropane	---	0.3 U	1.0	0.3	0.3 U	1.0	0.3	0.5 U	0.5	0.13	0.3 U	1.0	0.3	0.3 U	1.0	0.3	0.3 U	1.0	0.3
1,2,4-Trimethylbenzene	303	0.1 U	0.5	0.1	0.1 U	0.5	0.1	0.2 U	0.2	0.02	0.1 U	0.5	0.1	0.1 U	0.5	0.1	0.1 U	0.5	0.1
1,3,5-Trimethylbenzene	303	0.1 U	0.5	0.1	0.1 U	0.5	0.1	0.2 U	0.2	0.02	0.1 U	0.5	0.1	0.1 U	0.5	0.1	0.1 U	0.5	0.1
Vinyl Acetate	---	0.2 U	0.5	0.2	0.2 U	0.5	0.2	1.0 UJ	1.0	0.07	0.2 U	0.5	0.2	0.2 U	0.5	0.2	0.2 U	0.5	0.2
Vinyl Chloride	0.53	0.1 U	0.2	0.1	0.1 U	0.2	0.1	0.2 U	0.2	0.06	0.1 U	0.2	0.1	0.1 U	0.2	0.1	0.1 U	0.2	0.1
m,p-Xylene	1300	0.1 U	0.5	0.1	0.1 U	0.5	0.1	0.4 U	0.4	0.05	0.1 U	0.5	0.1	0.1 U	0.5	0.1	0.1 U	0.5	0.1
o-Xylene	1600	0.1 U	0.5	0.1	0.1 U	0.5	0.1	0.2 U	0.2	0.04	0.1 U	0.5	0.1	0.1 U	0.5	0.1	0.1 U	0.5	0.1
2-Chloroethylvinylether	---	NA	NA	NA	NA	NA	NA	1.0 U	1.0	0.25	NA	NA	NA	NA	NA	NA	NA	NA	NA
Bromoethane	---	NA	NA	NA	NA	NA	NA	0.2 U	0.2	0.04	NA	NA	NA	NA	NA	NA	NA	NA	NA
VOLATILES (µg/L)																			
Method SW8260C-SIM																			
Tetrachloroethene	3.3	**0.049**	0.020	0.010	**0.010** J1	0.020	0.010	0.020 U	0.020	0.0036	0.010 U	0.020	0.010	**0.043**	0.020	0.010	0.010 U	0.020	0.010
Vinyl Chloride	0.53	0.010 U	0.020	0.010	0.010 U	0.020	0.010	0.020 U	0.020	0.0022	0.010 U	0.020	0.010	0.010 U	0.020	0.010	0.010 U	0.020	0.010
Acrylonitrile	0.057	NA	NA	NA	NA	NA	NA	0.050 U	0.050	0.0158	NA	NA	NA	NA	NA	NA	NA	NA	NA
SEMIVOLATILES (µg/L)																			
Method SW8270D																			
Acenaphthene	120	0.1 U	0.5	0.1	0.1 U	0.5	0.1	1.0 U	1.0	0.55	0.1 U	0.5	0.1	0.1 U	0.5	0.1	0.1 U	0.5	0.1
Acenaphthylene	---	0.1 U	0.5	0.1	0.1 U	0.5	0.1	1.0 U	1.0	0.48	0.1 U	0.5	0.1	0.1 U	0.5	0.1	0.1 U	0.5	0.1
Anthracene	200	0.1 U	0.5	0.1	0.1 U	0.5	0.1	1.0 U	1.0	0.53	0.1 U	0.5	0.1	0.1 U	0.5	0.1	0.1 U	0.5	0.1
Benzo(a)anthracene	0.0018	0.1 U	0.5	0.1	0.1 U	0.5	0.1	1.0 U	1.0	0.52	0.1 U	0.5	0.1	0.1 U	0.5	0.1	0.1 U	0.5	0.1
Benzo(a)pyrene	0.00018	0.1 U	0.5	0.1	0.1 U	0.5	0.1	1.0 U	1.0	0.48	0.1 U	0.5	0.1	0.1 U	0.5	0.1	0.1 U	0.5	0.1
Benzo(b)fluoranthene	0.0018	0.1 U	0.5	0.1	0.1 U	0.5	0.1	NA	NA	NA	0.1 U	0.5	0.1	0.1 U	0.5	0.1	0.1 U	0.5	0.1
Benzo(g,h,i)perylene	---	0.1 U	0.5	0.1	0.1 U	0.5	0.1	1.0 U	1.0	0.55	0.1 U	0.5	0.1	0.1 U	0.5	0.1	0.1 U	0.5	0.1
Benzo(k)fluoranthene	0.0018	0.1 U	0.5	0.1	0.1 U	0.5	0.1	NA	NA	NA	0.1 U	0.5	0.1	0.1 U	0.5	0.1	0.1 U	0.5	0.1
Total Benzofluoranthenes	0.0018	NA	NA	NA	NA	NA	NA	1.0 U	1.0	0.48	NA	NA	NA	NA	NA	NA	NA	NA	NA
Benzoic Acid	2,240	6 U	14	6	6 U	15	6	10 U	10	5.1	6 UJ	14	6	6 U	15	6	6 U	14	6
Benzyl Alcohol	182	5 U	14	5	5 U	15	5	5.0 U	5.0	2.0	5 U	14	5	5 U	15	5	5 U	14	5
4-Bromophenyl-phenylether	---	0.5 U	1	0.5	0.5 U	1	0.5	1.0 U	1.0	0.42	0.5 U	1	0.5	0.5 U	1	0.5	0.5 U	1	0.5
Butylbenzylphthalate	0.41	2 U	5	2	2 U	5	2	1.0 U	1.0	0.56	2 U	5	2	2 U	5	2	2 U	5	2
Di-n-Butylphthalate	47	2 U	5	2	2 U	5	2	1.0 U	1.0	0.54	2 U	5	2	2 U	5	2	2 U	5	2
Carbazole	---	0.5 U	1	0.5	0.5 U	1	0.5	1.0 U	1.0	0.31	0.5 U	1	0.5	0.5 U	1	0.5	0.5 U	1	0.5
4-Chloro-3-methylphenol	3700	0.5 U	1	0.5	0.5 U	1	0.5	5.0 U	5.0	2.4	0.5 U	1	0.5	0.5 U	1	0.5	0.5 U	1	0.5
4-Chloroaniline	---	0.5 U	1	0.5	0.5 U	1	0.5	5.0 U	5.0	2.6	0.5 U	1	0.5	0.5 U	1	0.5	0.5 U	1	0.5
bis(2-Chloroethoxy) Methane	---	0.5 U	1	0.5	0.5 U	1	0.5	1.0 U	1.0	0.56	0.5 U	1	0.5	0.5 U	1	0.5	0.5 U	1	0.5
Bis-(2-Chloroethyl) Ether	---	0.5 U	1	0.5	0.5 U	1	0.5	1.0 U	1.0	0.58	0.5 U	1	0.5	0.5 U	1	0.5	0.5 U	1	0.5
2-Chloronaphthalene	---	0.4 U	1	0.4	0.4 U	1	0.4	1.0 U	1.0	0.48	0.4 U	1	0.4	0.4 U	1	0.4	0.4 U	1	0.4
2-Chlorophenol	---	0.5 U	1	0.5	0.5 U	1	0.5	1.0 U	1.0	0.53	0.5 U	1	0.5	0.5 U	1	0.5	0.5 U	1	0.5
4-Chlorophenyl-phenylether	---	0.5 U	1	0.5	0.5 U	1	0.5	1.0 U	1.0	0.45	0.5 U	1	0.5	0.5 U	1	0.5	0.5 U	1	0.5
2,2'-Oxybis(1-Chloropropane)	---	0.5 U	1	0.5	0.5 U	1	0.5	1.0 U	1.0	0.62	0.5 U	1	0.5	0.5 U	1	0.5	0.5 U	1	0.5
Chrysene	0.018	0.1 U	0.5	0.1	0.1 U	0.5	0.1	1.0 U	1.0	0.55	0.1 U	0.5	0.1	0.1 U	0.5	0.1	0.1 U	0.5	0.1
Dibenz(a,h)anthracene	0.0018	0.1 U	0.5	0.1	0.1 U	0.5	0.1	1.0 U	1.0	0.48	0.1 U	0.5	0.1	0.1 U	0.5	0.1	0.1 U	0.5	0.1
Dibenzofuran	1.3	0.5 U	1	0.5	0.5 U	1	0.5	1.0 U	1.0	0.48	0.5 U	1	0.5	0.5 U	1	0.5	0.5 U	1	0.5
1,2-Dichlorobenzene	440	0.5 U	1	0.5	0.5 U	1	0.5	1.0 U	1.0	0.36	0.5 U	1	0.5	0.5 U	1	0.5	0.5 U	1	0.5
1,3-Dichlorobenzene	---	0.5 U	1	0.5	0.5 U	1	0.5	1.0 U	1.0	0.36	0.5 U	1	0.5	0.5 U	1	0.5	0.5 U	1	0.5
1,4-Dichlorobenzene	1.7	0.5 U	1	0.5	0.5 U	1	0.5	1.0 U	1.0	0.40	0.5 U	1	0.5	0.5 U	1	0.5	0.5 U	1	0.5
3,3'-Dichlorobenzidine	---	2 U	5	2	2 U	5	2	5.0 U	5.0	1.5	2 U	5	2	2 U	5	2	2 U	5	2
2,4-Dichlorophenol	---	0.5 U	1	0.5	0.5 U	1	0.5	5.0 U	5.0	2.6	0.5 U	1	0.5	0.5 U	1	0.5	0.5 U	1	0.5
Diethylphthalate	4,236	2 U	5	2	2 U	5	2	1.0 U	1.0	0.58	2 U	5	2	2 U	5	2	2 U	5	2
2,4-Dimethylphenol	660	0.5 U	1	0.5	0.5 U	1	0.5	1.0 U	1.0	0.36	0.5 U	1	0.5	0.5 U	1	0.5	0.5 U	1	0.5
Dimethylphthalate	1,100,000	2 U	5	2	2 U	5	2	1.0 U	1.0	0.53	2 U	5	2	2 U	5	2	2 U	5	2
4,6-Dinitro-2-Methylphenol	---	5 U	14	5	5 U	15	5	10 U	10	3.1	5 U	14	5	5 U	15	5	5 U	14	5
2,4-Dinitrophenol	---	10 U	29	10	10 U	29	10	10 U	10	3.5	10 U	29	10	10 U	30	10	10 U	29	10
2,4-Dinitrotoluene	---	1 U	5	1	1 U	5	1	5.0 U	5.0	2.5	1 U	5	1	1 U	5	1	1 U	5	1
2,6-Dinitrotoluene	---	0.5 U	1	0.5	0.5 U	1	0.5	5.0 U	5.0	2.4	0.5 U	1	0.5	0.5 U	1	0.5	0.5 U	1	0.5
bis(2-Ethylhexyl)phthalate	1.2	2 U	5	2	2 U	5	2	1.0 U	1.0	1.9	2 U	5	2	2 U	5	2	2 U	5	2

TABLE L-1
GROUNDWATER ANALYTICAL RESULTS
BOEING ISAACSON-THOMPSON
REMEDIAL INVESTIGATION

Location:		IT-MW-19			IT-MW-19			IT-MW-20			IT-MW-20			IT-MW-20			IT-MW-20		
Laboratory Sample ID:	Preliminary	6689143/6689144/6689145/UY55I			6788039/6788040/6788041/VJ32D			UA54E/UA54N/UA55E/UA55M/UB47E/UB47M			6578915/6578916/UM31A			6689131/6689132/6689133/UY55A			6788030/6788031/6788032/VJ32A		
Laboratory Data Package ID:	Cleanup	1316071/UY55			1335483/VJ32			UA54/UA55/UB47			1295418/UM31			1316071/UY55			1335483/VJ32		
Sample Date:	Levels	6/14/2012			9/12/2012			12/08/2011			3/13/2012			6/14/2012			9/12/2012		
		Result	Reporting Limit	Detection Limit	Result	Reporting Limit	Detection Limit	Result	Reporting Limit	Detection Limit	Result	Reporting Limit	Detection Limit	Result	Reporting Limit	Detection Limit	Result	Reporting Limit	Detection Limit
Fluoranthene	11	0.1 U	0.5	0.1	0.1 U	0.5	0.1	1.0 U	1.0	0.52	0.1 U	0.5	0.1	0.1 U	0.5	0.1	0.1 U	0.5	0.1
Fluorene	45	0.1 U	0.5	0.1	0.1 U	0.5	0.1	1.0 U	1.0	0.56	0.1 U	0.5	0.1	0.1 U	0.5	0.1	0.1 U	0.5	0.1
Hexachlorobenzene	---	0.1 U	0.5	0.1	0.1 U	0.5	0.1	1.0 U	1.0	0.47	0.1 U	0.5	0.1	0.1 U	0.5	0.1	0.1 U	0.5	0.1
Hexachlorobutadiene	---	0.5 U	1	0.5	0.5 U	1	0.5	1.0 U	1.0	0.31	0.5 U	1	0.5	0.5 U	1	0.5	0.5 U	1	0.5
Hexachlorocyclopentadiene	---	5 U	14	5	5 U	15	5	5.0 U	5.0	1.2	5 U	14	5	5 U	15	5	5 U	14	5
Hexachloroethane	---	1 U	5	1	1 U	5	1	1.0 U	1.0	0.35	1 U	5	1	1 U	5	1	1 U	5	1
Indeno(1,2,3-cd)pyrene	0.0018	0.1 U	0.5	0.1	0.1 U	0.5	0.1	1.0 U	1.0	0.48	0.1 U	0.5	0.1	0.1 U	0.5	0.1	0.1 U	0.5	0.1
Isophorone	---	0.5 U	1	0.5	0.5 U	1	0.5	1.0 U	1.0	0.48	0.5 U	1	0.5	0.5 U	1	0.5	0.5 U	1	0.5
1-Methylnaphthalene	2.3	0.1 U	0.5	0.1	0.1 U	0.5	0.1	1.0 U	1.0	0.48	0.1 U	0.5	0.1	0.1 U	0.5	0.1	0.1 U	0.5	0.1
2-Methylnaphthalene	64	0.1 U	0.5	0.1	0.1 U	0.5	0.1	1.0 U	1.0	0.48	0.1 U	0.5	0.1	0.1 U	0.5	0.1	0.1 U	0.5	0.1
2-Methylphenol	3100	0.5 U	1	0.5	0.5 U	1	0.5	1.0 U	1.0	0.53	0.5 U	1	0.5	0.5 U	1	0.5	0.5 U	1	0.5
4-Methylphenol	330	0.5 U	1	0.5	0.5 U	1	0.5	1.0 U	1.0	0.52	0.5 U	1	0.5	0.5 U	1	0.5	0.5 U	1	0.5
Naphthalene	26	**0.1** J1	0.5	0.1	**0.1** J1	0.5	0.1	1.0 U	1.0	0.52	0.1 U	0.5	0.1	**0.1** J1	0.5	0.1	**0.1** J1	0.5	0.1
2-Nitroaniline	---	0.5 U	1	0.5	0.5 U	1	0.5	5.0 U	5.0	2.6	0.5 U	1	0.5	0.5 U	1	0.5	0.5 U	1	0.5
3-Nitroaniline	---	0.5 U	1	0.5	0.5 U	1	0.5	5.0 U	5.0	2.3	0.5 U	1	0.5	0.5 U	1	0.5	0.5 U	1	0.5
4-Nitroaniline	---	0.5 U	1	0.5	0.5 U	1	0.5	5.0 U	5.0	2.2	0.5 U	1	0.5	0.5 U	1	0.5	0.5 U	1	0.5
Nitrobenzene	---	0.5 U	1	0.5	0.5 U	1	0.5	1.0 U	1.0	0.58	0.5 U	1	0.5	0.5 U	1	0.5	0.5 U	1	0.5
2-Nitrophenol	---	0.5 U	1	0.5	0.5 U	1	0.5	5.0 U	5.0	2.0	0.5 U	1	0.5	0.5 U	1	0.5	0.5 U	1	0.5
4-Nitrophenol	---	10 U	29	10	10 U	29	10	5.0 U	5.0	2.6	10 U	29	10	10 U	30	10	10 U	29	10
N-Nitroso-Di-N-Propylamine	---	0.5 U	1	0.5	0.5 U	1	0.5	1.0 U	1.0	0.56	0.5 U	1	0.5	0.5 U	1	0.5	0.5 U	1	0.5
N-Nitrosodiphenylamine	1.96	0.5 U	1	0.5	0.5 U	1	0.5	1.0 U	1.0	0.46	0.5 U	1	0.5	0.5 U	1	0.5	0.5 U	1	0.5
Di-n-Octyl phthalate	---	2 U	5	2	2 U	5	2	1.0 U	1.0	0.51	2 U	5	2	2 U	5	2	2 U	5	2
Pentachlorophenol	---	1 U	5	1	1 U	5	1	5.0 U	5.0	2.4	1 U	5	1	1 U	5	1	1 U	5	1
Phenanthrene	---	0.1 U	0.5	0.1	0.1 U	0.5	0.1	1.0 U	1.0	0.56	0.1 U	0.5	0.1	0.1 U	0.5	0.1	0.1 U	0.5	0.1
Phenol	41,000	0.5 U	1	0.5	0.5 U	1	0.5	1.0 U	1.0	0.52	0.5 U	1	0.5	0.5 U	1	0.5	0.5 U	1	0.5
Pyrene	9.8	0.1 U	0.5	0.1	0.1 U	0.5	0.1	1.0 U	1.0	0.55	0.1 U	0.5	0.1	0.1 U	0.5	0.1	0.1 U	0.5	0.1
1,2,4-Trichlorobenzene	1.13	0.5 U	1	0.5	0.5 U	1	0.5	1.0 U	1.0	0.38	0.5 U	1	0.5	0.5 U	1	0.5	0.5 U	1	0.5
2,4,5-Trichlorophenol	---	0.5 U	1	0.5	0.5 U	1	0.5	5.0 U	5.0	2.2	0.5 U	1	0.5	0.5 U	1	0.5	0.5 U	1	0.5
2,4,6-Trichlorophenol	---	0.5 U	1	0.5	0.5 U	1	0.5	5.0 U	5.0	2.4	0.5 U	1	0.5	0.5 U	1	0.5	0.5 U	1	0.5
cPAHs (µg/L)																			
Method SW8270D-SIM																			
Benzo(a)anthracene	0.0018	0.0048 U	0.0095	0.0048	0.0049 U	0.0098	0.0049	0.010 U	0.010	0.0063	0.0049 U	0.0099	0.0049	0.0049 U	0.0097	0.0049	0.0048 U	0.0096	0.0048
Benzo(a)pyrene	0.00018	0.0048 U	0.0095	0.0048	0.0049 U	0.0098	0.0049	0.010 U	0.010	0.0048	0.0049 U	0.0099	0.0049	0.0049 U	0.0097	0.0049	0.0048 U	0.0096	0.0048
Benzo(b)fluoranthene	0.0018	0.0048 U	0.0095	0.0048	0.0049 U	0.0098	0.0049	NA	NA	NA	0.0049 U	0.0099	0.0049	0.0049 U	0.0097	0.0049	0.0048 U	0.0096	0.0048
Benzo(k)fluoranthene	0.0018	0.0048 U	0.0095	0.0048	0.0049 U	0.0098	0.0049	NA	NA	NA	0.0049 U	0.0099	0.0049	0.0049 U	0.0097	0.0049	0.0048 U	0.0096	0.0048
Total Benzofluoranthenes	0.0018	NA	NA	NA	NA	NA	NA	0.020 U	0.020	0.0099	NA	NA	NA	NA	NA	NA	NA	NA	NA
Chrysene	0.018	0.0048 U	0.0095	0.0048	0.0049 U	0.0098	0.0049	0.010 U	0.010	0.0046	0.0049 U	0.0099	0.0049	0.0049 U	0.0097	0.0049	0.0048 U	0.0096	0.0048
Dibenz(a,h)anthracene	0.0018	0.0038 U	0.0095	0.0038	0.0039 U	0.0098	0.0039	0.010 U	0.010	0.0048	0.0040 U	0.0099	0.0040	0.0039 U	0.0097	0.0039	0.0039 U	0.0096	0.0039
Indeno(1,2,3-cd)pyrene	0.0018	0.0038 U	0.0095	0.0038	0.0039 U	0.0098	0.0039	0.010 U	0.010	0.0046	0.0040 U	0.0099	0.0040	0.0039 U	0.0097	0.0039	0.0039 U	0.0096	0.0039
Pyrene	9.8	0.0095 U	0.048	0.0095	0.0098 U	0.049	0.0098	NA	NA	NA	0.0099 U	0.049	0.0099	0.0097 U	0.049	0.0097	0.0096 U	0.048	0.0096
cPAH TEQ	0.00018	ND	NA	NA	ND	NA	NA	ND	NA	NA	ND	NA	NA	ND	NA	NA	ND	NA	NA
PCBs (µg/L)																			
Method SW8082																			
Aroclor 1016	0.000023	0.0059 U	0.0099	0.0059	0.0059 U	0.0098	0.0059	0.010 U	0.010	0.0025	0.0058 U	0.0097	0.0058	0.0057 U	0.0095	0.0057	0.0057 U	0.0095	0.0057
Aroclor 1221	---	0.0059 U	0.0099	0.0059	0.0059 U	0.0098	0.0059	0.010 U	0.010	0.0028	0.0058 U	0.0097	0.0058	0.0057 U	0.0095	0.0057	0.0057 U	0.0095	0.0057
Aroclor 1232	---	0.0069 U	0.0099	0.0069	0.0069 U	0.0098	0.0069	0.010 U	0.010	0.0028	0.0068 U	0.0097	0.0068	0.0067 U	0.0095	0.0067	0.0066 U	0.0095	0.0066
Aroclor 1242	0.000023	0.0059 U	0.0099	0.0059	0.0059 U	0.0098	0.0059	0.010 U	0.010	0.0028	0.0058 U	0.0097	0.0058	0.0057 U	0.0095	0.0057	0.0057 U	0.0095	0.0057
Aroclor 1248	0.000023	0.0049 U	0.0099	0.0049	0.0049 U	0.0098	0.0049	0.010 U	0.010	0.0028	0.0048 U	0.0097	0.0048	0.0048 U	0.0095	0.0048	0.0047 U	0.0095	0.0047
Aroclor 1254	0.0000055	0.0049 U	0.0099	0.0049	0.0049 U	0.0098	0.0049	0.010 U	0.010	0.0028	0.0048 U	0.0097	0.0048	0.0048 U	0.0095	0.0048	0.0047 U	0.0095	0.0047
Aroclor 1260	0.000023	0.0049 U	0.0099	0.0049	0.0049 U	0.0098	0.0049	0.010 U	0.010	0.0028	0.0048 U	0.0097	0.0048	0.0048 U	0.0095	0.0048	0.0047 U	0.0095	0.0047
Total PCBs	0.000023	ND	NA	NA	ND	NA	NA	ND	NA	NA	ND	NA	NA	ND	NA	NA	ND	NA	NA

TABLE L-1
GROUNDWATER ANALYTICAL RESULTS
BOEING ISAACSON-THOMPSON
REMEDIAL INVESTIGATION

Location:		IT-MW-19			IT-MW-19			IT-MW-20			IT-MW-20			IT-MW-20			IT-MW-20		
Laboratory Sample ID:	Preliminary	6689143/6689144/6689145/UY55I			6788039/6788040/6788041/VJ32D			UA54E/UA54N/UA55E/UA55M/UB47E/UB47M			6578915/6578916/UM31A			6689131/6689132/6689133/UY55A			6788030/6788031/6788032/VJ32A		
Laboratory Data Package ID:	Cleanup	1316071/UY55			1335483/VJ32			UA54/UA55/UB47			1295418/UM31			1316071/UY55			1335483/VJ32		
Sample Date:	Levels	6/14/2012			9/12/2012			12/08/2011			3/13/2012			6/14/2012			9/12/2012		
		Result	Reporting Limit	Detection Limit	Result	Reporting Limit	Detection Limit	Result	Reporting Limit	Detection Limit	Result	Reporting Limit	Detection Limit	Result	Reporting Limit	Detection Limit	Result	Reporting Limit	Detection Limit
TOTAL PETROLEUM HYDROCARBONS (mg/L)																			
NWTPH-Dx																			
Diesel-Range Organics	0.5	0.029 U	0.096	0.029	0.029 U	0.098	0.029	0.10 U	0.10	0.022	0.066 U	0.24	0.066	0.029 U	0.097	0.029	0.028 U	0.095	0.028
Oil-Range Organics	0.5	0.068 U	0.240	0.068	0.069 U	0.250	0.069	0.20 U	0.20	0.044	0.95 U	2.8	0.95	0.068 U	0.240	0.068	0.066 U	0.240	0.066
NWTPH-G																			
Gasoline-Range Organics	1.0/0.8	0.05 U	0.25	0.05	0.05 U	0.25	0.05	0.25 U	0.25	0.06	0.05 U	0.25	0.05	0.05 U	0.25	0.05	0.05 U	0.25	0.05
TOTAL METALS (µg/L)																			
Method 200.8																			
Antimony	---	0.42 U	1.0	0.42	0.33 U	1.0	0.33	**0.3**	0.2	0.010	**0.45** J1	1.0	0.42	0.42 U	1.0	0.42	0.33 U	1.0	0.33
Arsenic	---	**23.3**	2.0	0.95	**82.9**	2.0	0.40	**143**	0.5	0.048	**518**	2.0	0.95	**212**	2.0	0.95	**219**	2.0	0.40
Barium	---	**10.7**	2.0	0.69	**17.6**	2.0	0.41	**16.2**	0.5	0.020	**5.0**	2.0	0.69	**5.8**	2.0	0.69	**7.9**	2.0	0.41
Beryllium	---	0.13 U	0.50	0.13	**0.031** J1	0.50	0.025	0.2 U	0.2	0.021	0.13 U	0.50	0.13	0.13 U	0.50	0.13	0.025 U	0.50	0.025
Cadmium	---	0.20 U	0.50	0.20	0.082 U	0.50	0.082	0.1 U	0.1	0.010	0.20 U	0.50	0.20	0.20 U	0.50	0.20	0.082 U	0.50	0.082
Chromium	---	0.60 U	2.0	0.60	**0.90** J1	2.0	0.50	**0.5**	0.5	0.045	**1.0** J1	2.0	0.60	**2.2**	2.0	0.60	0.50 U	2.0	0.50
Copper	---	**2.3**	2.0	0.38	**4.6**	2.0	0.40	**3.0**	0.5	0.158	**8.0**	2.0	0.38	**2.6**	2.0	0.38	**3.1**	2.0	0.40
Lead	---	0.080 U	1.0	0.080	0.034 U	1.0	0.034	0.1 U	0.1	0.046	**0.14** J1	1.0	0.080	0.080 U	1.0	0.080	0.034 U	1.0	0.034
Nickel	---	**1.1** J1	2.0	0.50	**3.0**	2.0	0.35	**2.1**	0.5	0.079	**0.69** J1	2.0	0.50	0.50 U	2.0	0.50	**0.42** J1	2.0	0.35
Selenium	---	0.27 U	2.0	0.27	0.50 U	2.0	0.50	**2**	2	0.13	**0.97** J1	2.0	0.27	**0.46** J1	2.0	0.27	**0.62** J1	2.0	0.50
Silver	---	0.098 U	0.50	0.098	0.10 U	0.50	0.10	0.2 U	0.2	0.008	0.098 U	0.50	0.098	0.098 U	0.50	0.098	0.10 U	0.50	0.10
Thallium	---	0.15 U	0.50	0.15	0.15 U	0.50	0.15	0.2 U	0.2	0.004	0.15 U	0.50	0.15	0.15 U	0.50	0.15	0.15 U	0.50	0.15
Zinc	---	4.0 U	15.0	4.0	**4.3** J1	15.0	1.1	4 U	4	0.50	4.0 U	15.0	4.0	4.0 U	15.0	4.0	1.1 U	15.0	1.1
Method SW7196A (mg/L)																			
Chromium VI	0.00058	0.010 U	0.010	0.00300	0.010 U	0.010	0.00300	0.010 U	0.010	0.00300	0.010 U	0.010	0.00300	0.010 U	0.010	0.00300	0.010 U	0.010	0.00300
Method SW7470A/EPA 1631E (ng/L)																			
Mercury	12	**1.32**	0.500	0.160	**2.73**	0.500	0.160	20.0 U	20.0	2.60	**8.18**	5.00	1.60	**2.67** J1	5.00	1.60	**1.43**	0.500	0.160
DISSOLVED METALS (µg/L)																			
Methods 200.8/SW7196A																			
Antimony	150	**0.39** J1	1.0	0.10	0.33 U	1.0	0.33	**0.2**	0.2	0.010	**0.55** J1	1.0	0.42	0.42 U	1.0	0.42	0.33 U	1.0	0.33
Arsenic	8	**25.9**	2.0	0.20	**82.3**	2.0	0.40	**135**	0.5	0.120	**449**	2.0	0.95	**211**	2.0	0.95	**221**	2.0	0.40
Barium	770	**12.4**	2.0	0.41	**18.4**	2.0	0.41	**14.2**	0.5	0.020	**1.4** J1	2.0	0.69	**5.4**	2.0	0.69	**6.3**	2.0	0.41
Beryllium	12	**0.027** J1	0.50	0.025	**0.034** J1	0.50	0.025	0.2 U	0.2	0.021	0.13 U	0.50	0.13	0.13 U	0.50	0.13	0.025 U	0.50	0.025
Cadmium	0.25	0.048 U	0.50	0.048	0.082 U	0.50	0.082	0.1 U	0.1	0.010	0.20 U	0.50	0.20	0.20 U	0.50	0.20	0.082 U	0.50	0.082
Chromium	74	**0.21** J1	2.0	0.10	**0.72** J1	2.0	0.50	0.5 U	0.5	0.045	**0.94** J1	2.0	0.60	**2.3**	2.0	0.60	0.50 U	2.0	0.50
Copper	8	**2.8**	2.0	0.15	**4.0**	2.0	0.40	**3.1**	0.5	0.158	**7.2**	2.0	0.38	**2.5**	2.0	0.38	**2.7**	2.0	0.40
Lead	2.5	0.034 U	1.0	0.034	0.034 U	1.0	0.034	0.1 U	0.1	0.046	0.080 U	1.0	0.080	0.080 U	1.0	0.080	**0.041** J1	1.0	0.034
Nickel	8.2	**1.8** J1	2.0	0.13	**3.1**	2.0	0.35	**2.0**	0.5	0.079	**0.60** J1	2.0	0.50	0.50 U	2.0	0.50	**0.37** J1	2.0	0.35
Selenium	5	**0.19** J1	2.0	0.18	0.50 U	2.0	0.50	**2.6**	0.5	0.127	**1.0** J1	2.0	0.27	**0.41** J1	2.0	0.27	**0.53** J1	2.0	0.50
Silver	22	0.046 U	0.50	0.046	0.10 U	0.50	0.10	0.2 U	0.2	0.008	0.098 U	0.50	0.098	0.098 U	0.50	0.098	0.10 U	0.50	0.10
Thallium	0.47	0.029 U	0.50	0.029	0.15 U	0.50	0.15	0.2 U	0.2	0.004	0.15 U	0.50	0.15	0.15 U	0.50	0.15	0.15 U	0.50	0.15
Zinc	56	**2.2** J1	15.0	1.1	**3.6** J1	15.0	1.1	4 U	4	0.50	4.0 U	15.0	4.0	4.0 U	15.0	4.0	2.9 UJ2	15.0	1.1
Method SW7470A/EPA 1631E (ng/L)																			
Mercury	12	**1.20**	0.500	0.160	**3.24** J1	10.0	3.20	20.0 U	20.0	2.60	**4.34**	5.00	1.60	**1.82** J1	5.00	1.60	1.60 U	5.00	1.60
CONVENTIONALS (mg/L)																			
Chloride (Method 300.0)	---	**2.1**	0.40	0.20	**11.2**	2.0	1.0	NA	NA	NA	NA	NA	NA	**384**	80.0	40.0	**498**	40.0	20.0
Nitrate (Method 300.0)	---	0.050 U	0.10	0.050	0.050 U	0.10	0.050	**0.9**	0.1	0.007	**1.6**	0.10	0.050	**1.0**	0.10	0.050	**0.84**	0.10	0.050
Sulfate (Method 300.0)	---	**52.7**	5.0	1.5	**39.4**	5.0	1.5	**69.1**	2.0	1.18	**11.7**	1.0	0.30	**61.1**	10.0	3.0	**63.5**	10.0	3.0
Total Dissolved Solids (Method 160.1)	---	**680**	60.0	19.4	**312**	30.0	9.7	**1160**	20.0	20.0	**320**	30.0	9.7	**800**	120	38.8	**894**	120	38.8
FIELD PARAMETERS																			
Temperature (°C)	---	13.50	NA	NA	14.45	NA	NA	15.19	NA	NA	13.09	NA	NA	12.43	NA	NA	13.82	NA	NA
Conductivity (uS/cm)	---	733	NA	NA	1180	NA	NA	4852	NA	NA	393	NA	NA	1112	NA	NA	1620	NA	NA
Dissolved Oxygen (mg/L)	---	2.38	NA	NA	1.18	NA	NA	3.68	NA	NA	5.47	NA	NA	8.88	NA	NA	5.67	NA	NA
pH (SU)	---	6.57	NA	NA	6.69	NA	NA	6.55	NA	NA	6.11	NA	NA	9.42	NA	NA	6.60	NA	NA
ORP (mV)	---	206.9	NA	NA	107	NA	NA	-12.7	NA	NA	98.4	NA	NA	143.4	NA	NA	93	NA	NA
Turbidity (NTU)	---	0.08	NA	NA	4.80	NA	NA	2.05	NA	NA	8.58	NA	NA	72.81	NA	NA	45.9	NA	NA
Ferrous Iron (mg/L)	---	0.0	NA	NA	0.0	NA	NA	NA	NA	NA	0.0	NA	NA	0.0	NA	NA	0.0	NA	NA

TABLE L-1
GROUNDWATER ANALYTICAL RESULTS
BOEING ISAACSON-THOMPSON
REMEDIAL INVESTIGATION

Location:		IT-MW-21			IT-MW-21			IT-MW-21			IT-MW-21			IT-MW-22			IT-MW-22		
Laboratory Sample ID:	Preliminary	UA54F/UA54O/UA55F/UA55N/UB47F/UB47N			6580634/6580635/UM54C			6692728/6692729/6692730/UZ18D			6788048/6788049/6788050/VJ32G			UA54B/UA54K/UA55B/UA55J/UB47B/UB47J			6571475/6571476/UL18F		
Laboratory Data Package ID:	Cleanup	UA54/UA55/UB47			1295735/UM54			1316786/UZ18			1335483/VJ32			UA54/UA55/UB47			1293989/UL18		
Sample Date:	Levels	12/08/2011			3/14/2012			6/18/2012			9/12/2012			12/08/2011			03/07/2012		
		Result	Reporting Limit	Detection Limit	Result	Reporting Limit	Detection Limit	Result	Reporting Limit	Detection Limit	Result	Reporting Limit	Detection Limit	Result	Reporting Limit	Detection Limit	Result	Reporting Limit	Detection Limit
VOLATILES (µg/L)																			
Method SW8260C																			
Acetone	110,000	5.0 U	5.0	2.1	**3.7** J1	5.0	3.0	15 U	25	15	3.0 U	5.0	3.0	5.0 U	5.0	2.1	3.0 U	5.0	3.0
Acrolein	---	5.0 UJ	5.0	2.5	5.0 U	25	5.0	25 U	130	25	5.0 U	25	5.0	5.0 UJ	5.0	2.5	5.0 U	25	5.0
Acrylonitrile	0.057	1.0 U	1.0	0.60	1.0 U	5.0	1.0	5.0 U	25	5.0	1.0 U	5.0	1.0	1.0 U	1.0	0.60	1.0 U	5.0	1.0
Benzene	2	0.2 U	0.2	0.03	0.1 U	0.2	0.1	0.5 U	1.0	0.5	0.1 U	0.2	0.1	0.2 U	0.2	0.03	0.1 U	0.2	0.1
Bromobenzene	---	0.2 U	0.2	0.06	0.1 U	0.5	0.1	0.5 U	2.5	0.5	0.1 U	0.5	0.1	0.2 U	0.2	0.06	0.1 U	0.5	0.1
Bromochloromethane	---	0.2 U	0.2	0.06	0.1 U	0.5	0.1	0.5 U	2.5	0.5	0.1 U	0.5	0.1	0.2 U	0.2	0.06	0.1 U	0.5	0.1
Bromodichloromethane	17	0.2 U	0.2	0.05	0.1 U	0.5	0.1	0.5 U	2.5	0.5	0.1 U	0.5	0.1	0.2 U	0.2	0.05	0.1 U	0.5	0.1
Bromoform	---	0.2 U	0.2	0.06	0.1 U	0.5	0.1	0.5 UJ	2.5	0.5	0.1 U	0.5	0.1	0.2 U	0.2	0.06	0.1 U	0.5	0.1
Bromomethane	---	1.0 U	1.0	0.25	0.1 U	0.5	0.1	0.5 U	2.5	0.5	0.1 U	0.5	0.1	1.0 U	1.0	0.25	0.1 U	0.5	0.1
2-Butanone	73,000	5.0 UJ	5.0	0.81	1.0 U	5.0	1.0	5.0 U	25	5.0	1.0 U	5.0	1.0	5.0 UJ	5.0	0.81	1.0 U	5.0	1.0
n-Butylbenzene	780	0.2 U	0.2	0.02	0.1 U	0.5	0.1	0.5 U	2.5	0.5	0.1 U	0.5	0.1	0.2 U	0.2	0.02	0.1 U	0.5	0.1
sec-Butylbenzene	---	0.2 U	0.2	0.02	0.1 U	0.5	0.1	0.5 U	2.5	0.5	0.1 U	0.5	0.1	0.2 U	0.2	0.02	0.1 U	0.5	0.1
tert-Butylbenzene	---	0.2 U	0.2	0.03	0.1 U	0.5	0.1	0.5 U	2.5	0.5	0.1 U	0.5	0.1	0.2 U	0.2	0.03	0.1 U	0.5	0.1
Carbon Disulfide	3900	0.2 U	0.2	0.04	0.4 U	0.5	0.4	2.0 U	2.5	2.0	0.4 U	0.5	0.4	0.2 U	0.2	0.04	0.4 U	0.5	0.4
Carbon Tetrachloride	0.46	0.2 U	0.2	0.04	0.1 U	0.2	0.1	0.5 U	1.0	0.5	0.1 U	0.2	0.1	0.2 U	0.2	0.04	0.1 U	0.2	0.1
Chlorobenzene	270	0.2 U	0.2	0.02	0.1 U	0.5	0.1	0.5 U	2.5	0.5	0.1 U	0.5	0.1	0.2 U	0.2	0.02	0.1 U	0.5	0.1
Chloroethane	21,000	0.2 U	0.2	0.09	0.1 U	0.5	0.1	0.5 U	2.5	0.5	0.1 U	0.5	0.1	0.2 U	0.2	0.09	0.1 U	0.5	0.1
Chloroform	9.4	0.2 U	0.2	0.03	0.1 U	0.2	0.1	0.5 U	1.0	0.5	0.1 U	0.2	0.1	0.2 U	0.2	0.03	0.1 U	0.2	0.1
Chloromethane	10.3	0.5 U	0.5	0.10	0.2 U	0.5	0.2	1.0 U	2.5	1.0	0.2 U	0.5	0.2	0.5 U	0.5	0.10	0.2 U	0.5	0.2
2-Chlorotoluene	---	0.2 U	0.2	0.02	0.1 U	0.5	0.1	0.5 U	2.5	0.5	0.1 U	0.5	0.1	0.2 U	0.2	0.02	0.1 U	0.5	0.1
4-Chlorotoluene	2600	0.2 U	0.2	0.02	0.1 U	0.5	0.1	0.5 U	2.5	0.5	0.1 U	0.5	0.1	0.2 U	0.2	0.02	0.1 U	0.5	0.1
1,2-Dibromo-3-chloropropane	---	0.5 U	0.5	0.04	0.2 U	0.5	0.2	1.0 U	2.5	1.0	0.2 U	0.5	0.2	0.5 U	0.5	0.04	0.2 U	0.5	0.2
Dibromochloromethane	---	0.2 U	0.2	0.05	0.1 U	0.5	0.1	0.5 U	2.5	0.5	0.1 U	0.5	0.1	0.2 U	0.2	0.05	0.1 U	0.5	0.1
Dibromomethane	---	0.2 U	0.2	0.14	0.1 U	0.5	0.1	0.5 U	2.5	0.5	0.1 U	0.5	0.1	0.2 U	0.2	0.14	0.1 U	0.5	0.1
trans-1,4-Dichloro-2-butene	---	1.0 UJ	1.0	0.32	1.0 U	5.0	1.0	5.0 UJ	25	5.0	1.0 U	5.0	1.0	1.0 UJ	1.0	0.32	1.0 U	5.0	1.0
1,2-Dichlorobenzene	440	0.2 U	0.2	0.04	0.1 U	0.5	0.1	0.5 U	2.5	0.5	0.1 U	0.5	0.1	0.2 U	0.2	0.04	0.1 U	0.5	0.1
1,3-Dichlorobenzene	960	0.2 U	0.2	0.04	0.1 U	0.5	0.1	0.5 U	2.5	0.5	0.1 U	0.5	0.1	0.2 U	0.2	0.04	0.1 U	0.5	0.1
1,4-Dichlorobenzene	1.7	0.2 U	0.2	0.04	0.1 U	0.5	0.1	0.5 U	2.5	0.5	0.1 U	0.5	0.1	0.2 U	0.2	0.04	0.1 U	0.5	0.1
1,1-Dichloroethane	33	0.2 U	0.2	0.05	0.1 U	0.5	0.1	0.5 U	2.5	0.5	0.1 U	0.5	0.1	0.2 U	0.2	0.05	0.1 U	0.5	0.1
1,2-Dichloroethane	3.6	0.2 U	0.2	0.07	0.1 U	0.2	0.1	0.5 U	1.0	0.5	0.1 U	0.2	0.1	0.2 U	0.2	0.07	0.1 U	0.2	0.1
1,1-Dichloroethene	3.2	0.2 U	0.2	0.05	0.1 U	0.2	0.1	0.5 U	1.0	0.5	0.1 U	0.2	0.1	0.2 U	0.2	0.05	0.1 U	0.2	0.1
cis-1,2-Dichloroethene	130	0.2 U	0.2	0.04	0.1 U	0.2	0.1	0.5 U	1.0	0.5	0.1 U	0.2	0.1	0.2 U	0.2	0.04	0.1 U	0.2	0.1
trans-1,2-Dichloroethene	940	0.2 U	0.2	0.05	0.1 U	0.2	0.1	0.5 U	1.0	0.5	0.1 U	0.2	0.1	0.2 U	0.2	0.05	0.1 U	0.2	0.1
1,2-Dichloropropane	3.7	0.2 U	0.2	0.04	0.1 U	0.5	0.1	0.5 U	2.5	0.5	0.1 U	0.5	0.1	0.2 U	0.2	0.04	0.1 U	0.5	0.1
1,3-Dichloropropane	---	0.2 U	0.2	0.06	0.1 U	0.5	0.1	0.5 U	2.5	0.5	0.1 U	0.5	0.1	0.2 U	0.2	0.06	0.1 U	0.5	0.1
2,2-Dichloropropane	---	0.2 U	0.2	0.05	0.1 U	0.5	0.1	0.5 U	2.5	0.5	0.1 U	0.5	0.1	0.2 U	0.2	0.05	0.1 U	0.5	0.1
1,1-Dichloropropene	---	0.2 U	0.2	0.03	0.1 U	0.5	0.1	0.5 U	2.5	0.5	0.1 U	0.5	0.1	0.2 U	0.2	0.03	0.1 U	0.5	0.1
cis-1,3-Dichloropropene	---	0.2 U	0.2	0.06	0.1 U	0.2	0.1	0.5 U	1.0	0.5	0.1 U	0.2	0.1	0.2 U	0.2	0.06	0.1 U	0.2	0.1
trans-1,3-Dichloropropene	---	0.2 U	0.2	0.08	0.1 U	0.2	0.1	0.5 U	1.0	0.5	0.1 U	0.2	0.1	0.2 U	0.2	0.08	0.1 U	0.2	0.1
Ethylbenzene	1.7	0.2 U	0.2	0.04	0.1 U	0.5	0.1	0.5 U	2.5	0.5	0.1 U	0.5	0.1	0.2 U	0.2	0.04	0.1 U	0.5	0.1
Ethylene Dibromide	---	0.2 U	0.2	0.08	0.1 U	0.5	0.1	0.5 U	2.5	0.5	0.1 U	0.5	0.1	0.2 U	0.2	0.08	0.1 U	0.5	0.1
Hexachlorobutadiene	---	0.5 U	0.5	0.07	0.1 U	0.5	0.1	0.5 U	2.5	0.5	0.1 U	0.5	0.1	0.5 U	0.5	0.07	0.1 U	0.5	0.1
2-Hexanone	3200	5.0 U	5.0	0.90	1.0 U	5.0	1.0	5.0 U	25	5.0	1.0 U	5.0	1.0	5.0 U	5.0	0.90	1.0 U	5.0	1.0
Isopropylbenzene	270	0.2 U	0.2	0.02	0.1 U	0.5	0.1	0.5 U	2.5	0.5	0.1 U	0.5	0.1	0.2 U	0.2	0.02	0.1 U	0.5	0.1
4-Isopropyltoluene	---	0.2 U	0.2	0.03	0.1 U	0.5	0.1	0.5 U	2.5	0.5	0.1 U	0.5	0.1	0.2 U	0.2	0.03	0.1 U	0.5	0.1
Methyl Iodide	---	1.0 U	1.0	0.23	0.1 U	0.5	0.1	0.5 U	2.5	0.5	0.1 U	0.5	0.1	1.0 U	1.0	0.23	0.1 U	0.5	0.1
4-Methyl-2-Pentanone (MIBK)	19,000	5.0 U	5.0	0.97	1.0 U	5.0	1.0	5.0 U	25	5.0	1.0 U	5.0	1.0	5.0 U	5.0	0.97	1.0 U	5.0	1.0
Methylene Chloride	230	0.5 U	0.5	0.48	0.2 U	0.5	0.2	1.0 U	2.5	1.0	0.2 U	0.5	0.2	0.5 U	0.5	0.48	0.2 U	0.5	0.2
Naphthalene	26	0.5 U	0.5	0.12	0.1 U	0.5	0.1	0.5 U	2.5	0.5	0.1 U	0.5	0.1	0.5 U	0.5	0.12	0.1 U	0.5	0.1
n-Propylbenzene	530	0.2 U	0.2	0.02	0.1 U	0.5	0.1	0.5 U	2.5	0.5	0.1 U	0.5	0.1	0.2 U	0.2	0.02	0.1 U	0.5	0.1
Styrene	77,000	0.2 U	0.2	0.04	0.1 U	0.5	0.1	0.5 U	2.5	0.5	0.1 U	0.5	0.1	0.2 U	0.2	0.04	0.1 U	0.5	0.1
1,1,1,2-Tetrachloroethane	---	0.2 U	0.2	0.04	0.1 U	0.5	0.1	0.5 U	2.5	0.5	0.1 U	0.5	0.1	0.2 U	0.2	0.04	0.1 U	0.5	0.1
1,1,2,2-Tetrachloroethane	0.33	0.2 U	0.2	0.06	0.1 U	0.2	0.1	0.5 U	1.0	0.5	0.1 U	0.2	0.1	0.2 U	0.2	0.06	0.1 U	0.2	0.1
Tetrachloroethene	3.3	0.2 U	0.2	0.05	0.1 U	0.2	0.1	0.5 U	1.0	0.5	0.1 U	0.2	0.1	0.2 U	0.2	0.05	0.1 U	0.2	0.1
Toluene	1300	0.2 U	0.2	0.04	0.1 U	0.2	0.1	0.5 U	1.0	0.5	0.1 U	0.2	0.1	0.2 U	0.2	0.04	**0.3**	0.2	0.1
1,1,2-Trichloro-1,2,2-trifuoroethane	59,000	0.2 U	0.2	0.04	0.2 U	0.5	0.2	1.0 U	2.5	1.0	0.2 U	0.5	0.2	0.2 U	0.2	0.04	0.2 U	0.5	0.2
1,2,3-Trichlorobenzene	---	0.5 U	0.5	0.11	0.1 U	0.5	0.1	0.5 U	2.5	0.5	0.1 U	0.5	0.1	0.5 U	0.5	0.11	0.1 U	0.5	0.1

TABLE L-1
GROUNDWATER ANALYTICAL RESULTS
BOEING ISAACSON-THOMPSON
REMEDIAL INVESTIGATION

Location:		IT-MW-21			IT-MW-21			IT-MW-21			IT-MW-21			IT-MW-22			IT-MW-22		
Laboratory Sample ID:	Preliminary	UA54F/UA54O/UA55F/UA55N/UB47F/UB47N			6580634/6580635/UM54C			6692728/6692729/6692730/UZ18D			6788048/6788049/6788050/VJ32G			UA54B/UA54K/UA55B/UA55J/UB47B/UB47J			6571475/6571476/UL18F		
Laboratory Data Package ID:	Cleanup	UA54/UA55/UB47			1295735/UM54			1316786/UZ18			1335483/VJ32			UA54/UA55/UB47			1293989/UL18		
Sample Date:	Levels	12/08/2011			3/14/2012			6/18/2012			9/12/2012			12/08/2011			03/07/2012		
		Result	Reporting Limit	Detection Limit	Result	Reporting Limit	Detection Limit	Result	Reporting Limit	Detection Limit	Result	Reporting Limit	Detection Limit	Result	Reporting Limit	Detection Limit	Result	Reporting Limit	Detection Limit
1,2,4-Trichlorobenzene	1.13	0.5 U	0.5	0.11	0.1 U	0.5	0.1	0.5 U	2.5	0.5	0.1 U	0.5	0.1	0.5 U	0.5	0.11	0.1 U	0.5	0.1
1,1,1-Trichloroethane	46,000	0.2 U	0.2	0.04	0.1 U	0.5	0.1	0.5 U	2.5	0.5	0.1 U	0.5	0.1	0.2 U	0.2	0.04	0.1 U	0.5	0.1
1,1,2-Trichloroethane	2.3	0.2 U	0.2	0.13	0.1 U	0.2	0.1	0.5 U	1.0	0.5	0.1 U	0.2	0.1	0.2 U	0.2	0.13	0.1 U	0.2	0.1
Trichloroethene	1.4	0.2 U	0.2	0.05	0.1 U	0.2	0.1	0.5 U	1.0	0.5	0.1 U	0.2	0.1	0.2 U	0.2	0.05	0.1 U	0.2	0.1
Trichlorofluoromethane	6900	0.2 U	0.2	0.04	0.1 U	0.5	0.1	0.5 U	2.5	0.5	0.1 U	0.5	0.1	0.2 U	0.2	0.04	0.1 U	0.5	0.1
1,2,3-Trichloropropane	---	0.5 U	0.5	0.13	0.3 U	1.0	0.3	1.5 U	5.0	1.5	0.3 U	1.0	0.3	0.5 U	0.5	0.13	0.3 U	1.0	0.3
1,2,4-Trimethylbenzene	303	**0.2**	0.2	0.02	**0.1** J1	0.5	0.1	0.5 U	2.5	0.5	0.1 U	0.5	0.1	0.2 U	0.2	0.02	0.1 U	0.5	0.1
1,3,5-Trimethylbenzene	303	0.2 U	0.2	0.02	0.1 U	0.5	0.1	0.5 U	2.5	0.5	0.1 U	0.5	0.1	0.2 U	0.2	0.02	0.1 U	0.5	0.1
Vinyl Acetate	---	1.0 UJ	1.0	0.07	0.2 U	0.5	0.2	1.0 U	2.5	1.0	0.2 U	0.5	0.2	1.0 UJ	1.0	0.07	0.2 U	0.5	0.2
Vinyl Chloride	0.53	0.2 U	0.2	0.06	0.1 U	0.2	0.1	0.5 U	1.0	0.5	0.1 U	0.2	0.1	0.2 U	0.2	0.06	0.1 U	0.2	0.1
m,p-Xylene	1300	0.4 U	0.4	0.05	0.1 U	0.5	0.1	0.5 U	2.5	0.5	0.1 U	0.5	0.1	0.4 U	0.4	0.05	0.1 U	0.5	0.1
o-Xylene	1600	0.2 U	0.2	0.04	0.1 U	0.5	0.1	0.5 U	2.5	0.5	0.1 U	0.5	0.1	0.2 U	0.2	0.04	0.1 U	0.5	0.1
2-Chloroethylvinylether	---	1.0 U	1.0	0.25	NA	NA	NA	NA	NA	NA	NA	NA	NA	1.0 U	1.0	0.25	NA	NA	NA
Bromoethane	---	0.2 U	0.2	0.04	NA	NA	NA	NA	NA	NA	NA	NA	NA	0.2 U	0.2	0.04	NA	NA	NA
VOLATILES (µg/L)																			
Method SW8260C-SIM																			
Tetrachloroethene	3.3	0.020 U	0.020	0.0036	0.010 U	0.020	0.010	0.021 U	0.020	0.010	0.010 U	0.020	0.010	0.020 U	0.020	0.0036	0.010 U	0.020	0.010
Vinyl Chloride	0.53	0.020 U	0.020	0.0022	0.010 U	0.020	0.010	0.010 U	0.020	0.010	0.010 U	0.020	0.010	0.020 U	0.020	0.0022	0.010 U	0.020	0.010
Acrylonitrile	0.057	0.050 U	0.050	0.0158	NA	NA	NA	NA	NA	NA	NA	NA	NA	0.050 U	0.050	0.0158	NA	NA	NA
SEMIVOLATILES (µg/L)																			
Method SW8270D																			
Acenaphthene	120	1.0 U	1.0	0.55	0.09 U	0.5	0.09	0.09 U	0.5	0.09	0.1 U	0.5	0.1	1.0 U	1.0	0.55	0.1 U	0.5	0.1
Acenaphthylene	---	1.0 U	1.0	0.48	0.09 U	0.5	0.09	0.09 U	0.5	0.09	0.1 U	0.5	0.1	1.0 U	1.0	0.48	0.1 U	0.5	0.1
Anthracene	200	1.0 U	1.0	0.53	0.09 U	0.5	0.09	0.09 U	0.5	0.09	0.1 U	0.5	0.1	1.0 U	1.0	0.53	0.1 U	0.5	0.1
Benzo(a)anthracene	0.0018	1.0 U	1.0	0.52	0.09 U	0.5	0.09	0.09 U	0.5	0.09	0.1 U	0.5	0.1	1.0 U	1.0	0.52	0.1 U	0.5	0.1
Benzo(a)pyrene	0.00018	1.0 U	1.0	0.48	0.09 U	0.5	0.09	0.09 U	0.5	0.09	0.1 U	0.5	0.1	1.0 U	1.0	0.48	0.1 U	0.5	0.1
Benzo(b)fluoranthene	0.0018	NA	NA	NA	0.09 U	0.5	0.09	0.09 U	0.5	0.09	0.1 U	0.5	0.1	NA	NA	NA	0.1 U	0.5	0.1
Benzo(g,h,i)perylene	---	1.0 U	1.0	0.55	0.09 U	0.5	0.09	0.09 U	0.5	0.09	0.1 U	0.5	0.1	1.0 U	1.0	0.55	0.1 U	0.5	0.1
Benzo(k)fluoranthene	0.0018	NA	NA	NA	0.09 U	0.5	0.09	0.09 U	0.5	0.09	0.1 U	0.5	0.1	NA	NA	NA	0.1 U	0.5	0.1
Total Benzofluoranthenes	0.0018	1.0 U	1.0	0.48	NA	NA	NA	NA	NA	NA	NA	NA	NA	1.0 U	1.0	0.48	NA	NA	NA
Benzoic Acid	2,240	10 U	10	5.1	6 UJ	14	6	6 U	14	6	6 U	14	6	10 U	10	5.1	6 UJ	16	6
Benzyl Alcohol	182	5.0 U	5.0	2.0	5 U	14	5	5 U	14	5	5 U	14	5	5.0 U	5.0	2.0	5 U	16	5
4-Bromophenyl-phenylether	---	1.0 U	1.0	0.42	0.5 U	1	0.5	0.5 U	0.9	0.5	0.5 U	1	0.5	1.0 U	1.0	0.42	0.5 U	1	0.5
Butylbenzylphthalate	0.41	1.0 U	1.0	0.56	2 U	5	2	2 U	5	2	2 U	5	2	1.0 U	1.0	0.56	2 U	5	2
Di-n-Butylphthalate	47	1.0 U	1.0	0.54	2 U	5	2	2 U	5	2	2 U	5	2	1.0 U	1.0	0.54	2 U	5	2
Carbazole	---	1.0 U	1.0	0.31	0.5 U	1	0.5	0.5 U	0.9	0.5	0.5 U	1	0.5	1.0 U	1.0	0.31	0.5 U	1	0.5
4-Chloro-3-methylphenol	3700	5.0 U	5.0	2.4	0.5 U	1	0.5	0.5 U	0.9	0.5	0.5 U	1	0.5	5.0 U	5.0	2.4	0.5 U	1	0.5
4-Chloroaniline	---	5.0 U	5.0	2.6	0.5 U	1	0.5	0.5 U	0.9	0.5	0.5 U	1	0.5	5.0 U	5.0	2.6	0.5 U	1	0.5
bis(2-Chloroethoxy) Methane	---	1.0 U	1.0	0.56	0.5 U	1	0.5	0.5 U	0.9	0.5	0.5 U	1	0.5	1.0 U	1.0	0.56	0.5 U	1	0.5
Bis-(2-Chloroethyl) Ether	---	1.0 U	1.0	0.58	0.5 U	1	0.5	0.5 U	0.9	0.5	0.5 U	1	0.5	1.0 U	1.0	0.58	0.5 U	1	0.5
2-Chloronaphthalene	---	1.0 U	1.0	0.48	0.4 U	1	0.4	0.4 U	0.9	0.4	0.4 U	1	0.4	1.0 U	1.0	0.48	0.4 U	1	0.4
2-Chlorophenol	---	1.0 U	1.0	0.53	0.5 U	1	0.5	0.5 U	0.9	0.5	0.5 U	1	0.5	1.0 U	1.0	0.53	0.5 U	1	0.5
4-Chlorophenyl-phenylether	---	1.0 U	1.0	0.45	0.5 U	1	0.5	0.5 U	0.9	0.5	0.5 U	1	0.5	1.0 U	1.0	0.45	0.5 U	1	0.5
2,2'-Oxybis(1-Chloropropane)	---	1.0 U	1.0	0.62	0.5 U	1	0.5	0.5 U	0.9	0.5	0.5 U	1	0.5	1.0 U	1.0	0.62	0.5 U	1	0.5
Chrysene	0.018	1.0 U	1.0	0.55	0.09 U	0.5	0.09	0.09 U	0.5	0.09	0.1 U	0.5	0.1	1.0 U	1.0	0.55	0.1 U	0.5	0.1
Dibenz(a,h)anthracene	0.0018	1.0 U	1.0	0.48	0.09 U	0.5	0.09	0.09 U	0.5	0.09	0.1 U	0.5	0.1	1.0 U	1.0	0.48	0.1 U	0.5	0.1
Dibenzofuran	1.3	1.0 U	1.0	0.48	0.5 U	1	0.5	0.5 U	0.9	0.5	0.5 U	1	0.5	1.0 U	1.0	0.48	0.5 U	1	0.5
1,2-Dichlorobenzene	440	1.0 U	1.0	0.36	0.5 U	1	0.5	0.5 U	0.9	0.5	0.5 U	1	0.5	1.0 U	1.0	0.36	0.5 U	1	0.5
1,3-Dichlorobenzene	---	1.0 U	1.0	0.36	0.5 U	1	0.5	0.5 U	0.9	0.5	0.5 U	1	0.5	1.0 U	1.0	0.36	0.5 U	1	0.5
1,4-Dichlorobenzene	1.7	1.0 U	1.0	0.40	0.5 U	1	0.5	0.5 U	0.9	0.5	0.5 U	1	0.5	1.0 U	1.0	0.40	0.5 U	1	0.5
3,3'-Dichlorobenzidine	---	5.0 U	5.0	1.5	2 U	5	2	2 U	5	2	2 U	5	2	5.0 U	5.0	1.5	2 U	5	2
2,4-Dichlorophenol	---	5.0 U	5.0	2.6	0.5 U	1	0.5	0.5 U	0.9	0.5	0.5 U	1	0.5	5.0 U	5.0	2.6	0.5 U	1	0.5
Diethylphthalate	4,236	1.0 U	1.0	0.58	2 U	5	2	2 U	5	2	2 U	5	2	1.0 U	1.0	0.58	2 U	5	2
2,4-Dimethylphenol	660	1.0 U	1.0	0.36	0.5 U	1	0.5	0.5 U	0.9	0.5	0.5 U	1	0.5	1.0 U	1.0	0.36	0.5 U	1	0.5
Dimethylphthalate	1,100,000	1.0 U	1.0	0.53	2 U	5	2	2 U	5	2	2 U	5	2	1.0 U	1.0	0.53	2 U	5	2
4,6-Dinitro-2-Methylphenol	---	10 U	10	3.1	5 U	14	5	5 U	14	5	5 U	14	5	10 U	10	3.1	5 U	16	5
2,4-Dinitrophenol	---	10 U	10	3.5	9 U	28	9	9 U	28	9	10 U	29	10	10 U	10	3.5	11 U	32	11
2,4-Dinitrotoluene	---	5.0 U	5.0	2.5	0.9 U	5	0.9	0.9 U	5	0.9	1 U	5	1	5.0 U	5.0	2.5	1 U	5	1
2,6-Dinitrotoluene	---	5.0 U	5.0	2.4	0.5 U	1	0.5	0.5 U	0.9	0.5	0.5 U	1	0.5	5.0 U	5.0	2.4	0.5 U	1	0.5
bis(2-Ethylhexyl)phthalate	1.2	1.0 U	1.0	1.9	2 U	5	2	2 U	5	2	2 U	5	2	1.0 U	1.0	1.9	2 U	5	2

TABLE L-1
GROUNDWATER ANALYTICAL RESULTS
BOEING ISAACSON-THOMPSON
REMEDIAL INVESTIGATION

Location:		IT-MW-21			IT-MW-21			IT-MW-21			IT-MW-21			IT-MW-22			IT-MW-22		
Laboratory Sample ID:	Preliminary	UA54F/UA54O/UA55F/UA55N/UB47F/UB47N			6580634/6580635/UM54C			6692728/6692729/6692730/UZ18D			6788048/6788049/6788050/VJ32G			UA54B/UA54K/UA55B/UA55J/UB47B/UB47J			6571475/6571476/UL18F		
Laboratory Data Package ID:	Cleanup	UA54/UA55/UB47			1295735/UM54			1316786/UZ18			1335483/VJ32			UA54/UA55/UB47			1293989/UL18		
Sample Date:	Levels	12/08/2011			3/14/2012			6/18/2012			9/12/2012			12/08/2011			03/07/2012		
		Result	Reporting Limit	Detection Limit	Result	Reporting Limit	Detection Limit	Result	Reporting Limit	Detection Limit	Result	Reporting Limit	Detection Limit	Result	Reporting Limit	Detection Limit	Result	Reporting Limit	Detection Limit
Fluoranthene	11	1.0 U	1.0	0.52	0.09 U	0.5	0.09	0.09 U	0.5	0.09	0.1 U	0.5	0.1	1.0 U	1.0	0.52	0.1 U	0.5	0.1
Fluorene	45	1.0 U	1.0	0.56	0.09 U	0.5	0.09	0.09 U	0.5	0.09	0.1 U	0.5	0.1	1.0 U	1.0	0.56	0.1 U	0.5	0.1
Hexachlorobenzene	---	1.0 U	1.0	0.47	0.09 U	0.5	0.09	0.09 U	0.5	0.09	0.1 U	0.5	0.1	1.0 U	1.0	0.47	0.1 U	0.5	0.1
Hexachlorobutadiene	---	1.0 U	1.0	0.31	0.5 U	1	0.5	0.5 U	0.9	0.5	0.5 U	1	0.5	1.0 U	1.0	0.31	0.5 U	1	0.5
Hexachlorocyclopentadiene	---	5.0 U	5.0	1.2	5 U	14	5	5 U	14	5	5 U	14	5	5.0 U	5.0	1.2	5 U	16	5
Hexachloroethane	---	1.0 U	1.0	0.35	0.9 U	5	0.9	0.9 U	5	0.9	1 U	5	1	1.0 U	1.0	0.35	1 U	5	1
Indeno(1,2,3-cd)pyrene	0.0018	1.0 U	1.0	0.48	0.09 U	0.5	0.09	0.09 U	0.5	0.09	0.1 U	0.5	0.1	1.0 U	1.0	0.48	0.1 U	0.5	0.1
Isophorone	---	1.0 U	1.0	0.48	0.5 U	1	0.5	0.5 U	0.9	0.5	0.5 U	1	0.5	1.0 U	1.0	0.48	0.5 U	1	0.5
1-Methylnaphthalene	2.3	1.0 U	1.0	0.48	0.09 U	0.5	0.09	0.09 U	0.5	0.09	0.1 U	0.5	0.1	1.0 U	1.0	0.48	0.1 U	0.5	0.1
2-Methylnaphthalene	64	1.0 U	1.0	0.48	0.09 U	0.5	0.09	0.09 U	0.5	0.09	0.1 U	0.5	0.1	1.0 U	1.0	0.48	0.1 U	0.5	0.1
2-Methylphenol	3100	1.0 U	1.0	0.53	0.5 U	1	0.5	0.5 U	0.9	0.5	0.5 U	1	0.5	1.0 U	1.0	0.53	0.5 U	1	0.5
4-Methylphenol	330	1.0 U	1.0	0.52	0.5 U	1	0.5	0.5 U	0.9	0.5	0.5 U	1	0.5	**0.8** J1	1.0	0.52	0.5 U	1	0.5
Naphthalene	26	1.0 U	1.0	0.52	0.09 U	0.5	0.09	**0.1** J1	0.5	0.09	**0.1** J1	0.5	0.1	1.0 U	1.0	0.52	**0.3** J1	0.5	0.1
2-Nitroaniline	---	5.0 U	5.0	2.6	0.5 U	1	0.5	0.5 U	0.9	0.5	0.5 U	1	0.5	5.0 U	5.0	2.6	0.5 U	1	0.5
3-Nitroaniline	---	5.0 U	5.0	2.3	0.5 U	1	0.5	0.5 U	0.9	0.5	0.5 U	1	0.5	5.0 U	5.0	2.3	0.5 U	1	0.5
4-Nitroaniline	---	5.0 U	5.0	2.2	0.5 U	1	0.5	0.5 U	0.9	0.5	0.5 U	1	0.5	5.0 U	5.0	2.2	0.5 U	1	0.5
Nitrobenzene	---	1.0 U	1.0	0.58	0.5 U	1	0.5	0.5 U	0.9	0.5	0.5 U	1	0.5	1.0 U	1.0	0.58	0.5 U	1	0.5
2-Nitrophenol	---	5.0 U	5.0	2.0	0.5 U	1	0.5	0.5 U	0.9	0.5	0.5 U	1	0.5	5.0 U	5.0	2.0	0.5 U	1	0.5
4-Nitrophenol	---	5.0 U	5.0	2.6	9 U	28	9	9 U	28	9	10 U	29	10	5.0 U	5.0	2.6	11 U	32	11
N-Nitroso-Di-N-Propylamine	---	1.0 U	1.0	0.56	0.5 U	1	0.5	0.5 U	0.9	0.5	0.5 U	1	0.5	1.0 U	1.0	0.56	0.5 U	1	0.5
N-Nitrosodiphenylamine	1.96	1.0 U	1.0	0.46	0.5 U	1	0.5	0.5 U	0.9	0.5	0.5 U	1	0.5	1.0 U	1.0	0.46	0.5 U	1	0.5
Di-n-Octyl phthalate	---	1.0 U	1.0	0.51	2 U	5	2	2 U	5	2	2 U	5	2	1.0 U	1.0	0.51	2 U	5	2
Pentachlorophenol	---	5.0 U	5.0	2.4	0.9 U	5	0.9	0.9 U	5	0.9	1 U	5	1	5.0 U	5.0	2.4	1 U	5	1
Phenanthrene	---	1.0 U	1.0	0.56	0.09 U	0.5	0.09	0.09 U	0.5	0.09	0.1 U	0.5	0.1	1.0 U	1.0	0.56	0.1 U	0.5	0.1
Phenol	41,000	**1.5**	1.0	0.52	0.5 U	1	0.5	0.5 U	0.9	0.5	0.5 U	1	0.5	1.0 U	1.0	0.52	0.5 U	1	0.5
Pyrene	9.8	1.0 U	1.0	0.55	0.09 U	0.5	0.09	0.09 UJ	0.5	0.09	0.1 U	0.5	0.1	1.0 U	1.0	0.55	0.1 U	0.5	0.1
1,2,4-Trichlorobenzene	1.13	1.0 U	1.0	0.38	0.5 U	1	0.5	0.5 U	0.9	0.5	0.5 U	1	0.5	1.0 U	1.0	0.38	0.5 U	1	0.5
2,4,5-Trichlorophenol	---	5.0 U	5.0	2.2	0.5 U	1	0.5	0.5 U	0.9	0.5	0.5 U	1	0.5	5.0 U	5.0	2.2	0.5 U	1	0.5
2,4,6-Trichlorophenol	---	5.0 U	5.0	2.4	0.5 U	1	0.5	0.5 U	0.9	0.5	0.5 U	1	0.5	5.0 U	5.0	2.4	0.5 U	1	0.5
cPAHs (µg/L)																			
Method SW8270D-SIM																			
Benzo(a)anthracene	0.0018	0.010 U	0.010	0.0063	0.0050 U	0.0099	0.0050	0.0047 U	0.0095	0.0047	0.0048 U	0.0097	0.0048	0.010 U	0.010	0.0063	0.0051 U	0.010	0.0051
Benzo(a)pyrene	0.00018	0.010 U	0.010	0.0048	0.0050 U	0.0099	0.0050	0.0047 U	0.0095	0.0047	0.0048 U	0.0097	0.0048	0.010 U	0.010	0.0048	0.0051 U	0.010	0.0051
Benzo(b)fluoranthene	0.0018	NA	NA	NA	0.0050 U	0.0099	0.0050	0.0047 U	0.0095	0.0047	0.0048 U	0.0097	0.0048	NA	NA	NA	0.0051 U	0.010	0.0051
Benzo(k)fluoranthene	0.0018	NA	NA	NA	0.0050 U	0.0099	0.0050	0.0047 U	0.0095	0.0047	0.0048 U	0.0097	0.0048	NA	NA	NA	0.0051 U	0.010	0.0051
Total Benzofluoranthenes	0.0018	0.020 U	0.020	0.0099	NA	NA	NA	NA	NA	NA	NA	NA	NA	0.020 U	0.020	0.0099	NA	NA	NA
Chrysene	0.018	0.010 U	0.010	0.0046	0.0050 U	0.0099	0.0050	0.0047 U	0.0095	0.0047	0.0048 U	0.0097	0.0048	0.010 U	0.010	0.0046	0.0051 U	0.010	0.0051
Dibenz(a,h)anthracene	0.0018	0.010 U	0.010	0.0048	0.0040 U	0.0099	0.0040	0.0038 U	0.0095	0.0038	0.0039 U	0.0097	0.0039	0.010 U	0.010	0.0048	0.0041 U	0.010	0.0041
Indeno(1,2,3-cd)pyrene	0.0018	0.010 U	0.010	0.0046	0.0040 U	0.0099	0.0040	0.0038 U	0.0095	0.0038	0.0039 U	0.0097	0.0039	0.010 U	0.010	0.0046	0.0041 U	0.010	0.0041
Pyrene	9.8	NA	NA	NA	0.0099 U	0.050	0.0099	0.0095 U	0.047	0.0095	0.0097 U	0.048	0.0097	NA	NA	NA	0.010 U	0.051	0.010
cPAH TEQ	0.00018	ND	NA	NA	ND	NA	NA	ND	NA	NA	ND	NA	NA	ND	NA	NA	ND	NA	NA
PCBs (µg/L)																			
Method SW8082																			
Aroclor 1016	0.000023	0.010 U	0.010	0.0025	0.0058 U	0.0097	0.0058	0.0063 U	0.011	0.0063	0.0057 U	0.0094	0.0057	0.010 U	0.010	0.0025	0.0059 U	0.0098	0.0059
Aroclor 1221	---	0.010 U	0.010	0.0028	0.0058 U	0.0097	0.0058	0.0063 U	0.011	0.0063	0.0057 U	0.0094	0.0057	0.010 U	0.010	0.0028	0.0059 U	0.0098	0.0059
Aroclor 1232	---	0.010 U	0.010	0.0028	0.0068 U	0.0097	0.0068	0.0074 U	0.011	0.0074	0.0066 U	0.0094	0.0066	0.010 U	0.010	0.0028	0.0069 U	0.0098	0.0069
Aroclor 1242	0.000023	0.010 U	0.010	0.0028	0.0058 U	0.0097	0.0058	0.0063 U	0.011	0.0063	0.0057 U	0.0094	0.0057	0.010 U	0.010	0.0028	0.0059 U	0.0098	0.0059
Aroclor 1248	0.000023	0.010 U	0.010	0.0028	0.0048 U	0.0097	0.0048	0.0053 U	0.011	0.0053	0.0047 U	0.0094	0.0047	0.010 U	0.010	0.0028	0.0049 U	0.0098	0.0049
Aroclor 1254	0.0000055	0.010 U	0.010	0.0028	0.0048 U	0.0097	0.0048	0.0053 U	0.011	0.0053	0.0047 U	0.0094	0.0047	0.010 U	0.010	0.0028	0.0049 U	0.0098	0.0049
Aroclor 1260	0.000023	0.010 U	0.010	0.0028	0.0048 U	0.0097	0.0048	0.0053 U	0.011	0.0053	0.0047 U	0.0094	0.0047	0.010 U	0.010	0.0028	0.0049 U	0.0098	0.0049
Total PCBs	0.000023	ND	NA	NA	ND	NA	NA	ND	NA	NA	ND	NA	NA	ND	NA	NA	ND	NA	NA

TABLE L-1
GROUNDWATER ANALYTICAL RESULTS
BOEING ISAACSON-THOMPSON
REMEDIAL INVESTIGATION

Location:		IT-MW-21			IT-MW-21			IT-MW-21			IT-MW-21			IT-MW-22			IT-MW-22		
Laboratory Sample ID:	Preliminary	UA54F/UA54O/UA55F/UA55N/UB47F/UB47N			6580634/6580635/UM54C			6692728/6692729/6692730/UZ18D			6788048/6788049/6788050/VJ32G			UA54B/UA54K/UA55B/UA55J/UB47B/UB47J			6571475/6571476/UL18F		
Laboratory Data Package ID:	Cleanup	UA54/UA55/UB47			1295735/UM54			1316786/UZ18			1335483/VJ32			UA54/UA55/UB47			1293989/UL18		
Sample Date:	Levels	12/08/2011			3/14/2012			6/18/2012			9/12/2012			12/08/2011			03/07/2012		
		Result	Reporting Limit	Detection Limit	Result	Reporting Limit	Detection Limit	Result	Reporting Limit	Detection Limit	Result	Reporting Limit	Detection Limit	Result	Reporting Limit	Detection Limit	Result	Reporting Limit	Detection Limit
TOTAL PETROLEUM HYDROCARBONS (mg/L)																			
NWTPH-Dx																			
Diesel-Range Organics	0.5	0.10 U	0.10	0.022	0.075 U	0.27	0.075	0.030 U	0.100	0.030	0.029 U	0.095	0.029	0.10 U	0.10	0.022	0.069 U	0.25	0.069
Oil-Range Organics	0.5	0.20 U	0.20	0.044	1.1 U	3.2	1.1	0.070 U	0.250	0.070	0.067 U	0.240	0.067	0.20 U	0.20	0.044	0.99 U	3.0	0.99
NWTPH-G																			
Gasoline-Range Organics	1.0/0.8	0.25 U	0.25	0.06	0.05 U	0.25	0.05	0.05 U	0.25	0.05	0.05 U	0.25	0.05	0.25 U	0.25	0.06	0.05 U	0.25	0.05
TOTAL METALS (µg/L)																			
Method 200.8																			
Antimony	---	**0.4**	0.2	0.010	0.42 U	1.0	0.42	0.33 U	1.0	0.33	0.33 U	1.0	0.33	**0.3**	0.2	0.010	0.42 U	1.0	0.42
Arsenic	---	**21,300**	50	12.0	**19,000**	2.0	0.95	**20,500**	2.0	10.0	**19,200**	100	20.0	**21,900**	50	12.0	**21,000**	100	47.5
Barium	---	**17.2**	0.5	0.020	**16.1**	2.0	0.69	**16.2**	2.0	0.41	**17.9**	2.0	0.41	**16.9**	0.5	0.020	**18.6**	2.0	0.69
Beryllium	---	0.2 U	0.2	0.021	0.13 U	0.50	0.13	**0.068** J1	0.50	0.025	**0.042** J1	0.50	0.025	0.2 U	0.2	0.021	0.13 U	0.50	0.13
Cadmium	---	0.1 U	0.1	0.010	0.20 U	0.50	0.20	0.048 U	0.50	0.048	0.082 U	0.50	0.082	0.1 U	0.1	0.010	0.20 U	0.50	0.20
Chromium	---	**2.4**	0.5	0.045	**2.7**	2.0	0.60	**3.0**	2.0	0.10	**2.1**	2.0	0.50	**3**	1	0.11	**4.6**	2.0	0.60
Copper	---	**69.7**	0.5	0.158	**7.5**	2.0	0.38	**13.1**	2.0	0.15	**20.8**	2.0	0.40	**27**	1	0.40	**98.5**	2.0	0.38
Lead	---	**0.3**	0.1	0.046	**0.19** J1	1.0	0.080	**0.20** J1	1.0	0.034	**0.21** J1	1.0	0.034	**0.3**	0.1	0.046	**0.55** J1	1.0	0.080
Nickel	---	**4.0**	0.5	0.079	**3.1**	2.0	0.50	**2.4**	2.0	0.13	**1.9** J1	2.0	0.35	**1.8**	0.5	0.079	**1.3** J1	2.0	0.50
Selenium	---	0.5 U	0.5	0.127	0.27 U	2.0	0.27	**0.30** J1	2.0	0.18	0.50 U	2.0	0.50	0.5 U	0.5	0.127	0.27 U	2.0	0.27
Silver	---	0.2 U	0.2	0.008	0.098 U	0.50	0.098	0.10 U	0.50	0.10	0.10 U	0.50	0.10	0.2 U	0.2	0.008	0.098 U	0.50	0.098
Thallium	---	0.2 U	0.2	0.004	0.15 U	0.50	0.15	0.029 U	0.50	0.029	0.15 U	0.50	0.15	0.2 U	0.2	0.004	0.15 U	0.50	0.15
Zinc	---	**10**	4	0.50	**6.1** J1	15.0	4.0	**6.0** J1	15.0	1.1	**6.4** J1	15.0	1.1	**7**	4	0.50	**6.6** J1	15.0	4.0
Method SW7196A (mg/L)																			
Chromium VI	0.00058	0.010 U	0.010	0.00300	**0.010**	0.010	0.00300	0.010 U	0.010	0.00300	0.010 U	0.010	0.00300	0.010 U	0.010	0.00300	0.010 U	0.010	0.00300
Method SW7470A/EPA 1631E (ng/L)																			
Mercury	12	20.0 U	20.0	2.60	3.20 U	10.00	3.20	**9.63** J1	10.00	3.20	**4.36** J1	10.0	3.20	20.0 U	20.0	2.60	**9.32**	5.00	1.60
DISSOLVED METALS (µg/L)																			
Methods 200.8/SW7196A																			
Antimony	150	**0.4**	0.2	0.010	0.42 U	1.0	0.42	0.33 U	1.0	0.33	0.33 U	1.0	0.33	**0.3**	0.2	0.010	0.42 U	1.0	0.42
Arsenic	8	**22,600**	50	12.0	**17,000**	2.0	0.95	**18,200**	50.0	5.0	**19,500**	100	20.0	**24,000**	50	12.0	**18,900**	100	47.5
Barium	770	**13.7**	0.5	0.020	**12.6**	2.0	0.69	**12.9**	2.0	0.41	**14.9**	2.0	0.41	**14.6**	0.5	0.020	**13.5**	2.0	0.69
Beryllium	12	0.2 U	0.2	0.021	0.13 U	0.50	0.13	**0.054** J1	0.50	0.025	**0.036** J1	0.50	0.025	0.2 U	0.2	0.021	0.13 U	0.50	0.13
Cadmium	0.25	0.1 U	0.1	0.010	0.20 U	0.50	0.20	0.048 U	0.50	0.048	0.082 U	0.50	0.082	0.1 U	0.1	0.010	0.20 U	0.50	0.20
Chromium	74	**2**	1	0.11	**2.8**	2.0	0.60	**3.3**	2.0	0.10	**2.1**	2.0	0.50	**3**	1	0.11	**3.1**	2.0	0.60
Copper	8	**0.6**	0.5	0.158	**1.2** J1	2.0	0.38	**1.8** J1	2.0	0.15	0.74 UJ2	2.0	0.40	**1.0**	0.5	0.158	**1.2** J1	2.0	0.38
Lead	2.5	0.1 U	0.1	0.046	0.080 U	1.0	0.080	**0.084** J1	1.0	0.034	0.034 U	1.0	0.034	0.1 U	0.1	0.046	0.080 U	1.0	0.080
Nickel	8.2	**3.4**	0.5	0.079	**2.9**	2.0	0.50	**2.4**	2.0	0.13	**1.5** J1	2.0	0.35	**1.9**	0.5	0.079	**1.1** J1	2.0	0.50
Selenium	5	0.5 U	0.5	0.127	**0.27** J1	2.0	0.27	**0.28** J1	2.0	0.18	0.50 U	2.0	0.50	**0.8**	0.5	0.127	0.27 U	2.0	0.27
Silver	22	0.2 U	0.2	0.008	0.098 U	0.50	0.098	0.10 U	0.50	0.10	0.10 U	0.50	0.10	0.2 U	0.2	0.008	0.098 U	0.50	0.098
Thallium	0.47	0.2 U	0.2	0.004	0.15 U	0.50	0.15	0.029 U	0.50	0.029	0.15 U	0.50	0.15	0.2 U	0.2	0.004	0.15 U	0.50	0.15
Zinc	56	4 U	4	0.50	4.0 U	15.0	4.0	**1.8** J1	15.0	1.1	**2.3** J1	15.0	1.1	**6**	4	0.50	4.0 U	15.0	4.0
Method SW7470A/EPA 1631E (ng/L)																			
Mercury	12	20.0 U	20.0	2.60	3.20 U	10.00	3.20	3.20 U	10.00	3.20	3.20 U	10.0	3.20	20.0 U	20.0	2.60	**0.00478** J1	10.00	3.20
CONVENTIONALS (mg/L)																			
Chloride (Method 300.0)	---	NA	NA	NA	NA	NA	NA	**3.0**	0.4	0.20	**3.3**	0.40	0.20	NA	NA	NA	NA	NA	NA
Nitrate (Method 300.0)	---	0.1 U	0.1	0.007	0.050 U	0.10	0.050	0.050 U	0.10	0.050	0.050 U	0.10	0.050	0.1 U	0.1	0.007	0.050 U	0.10	0.050
Sulfate (Method 300.0)	---	**16.3**	0.5	0.295	**10.2** J	1.0	0.30	**11.7**	1.0	0.30	**4.7**	1.0	0.30	**6.4**	0.5	0.295	**22.4**	5.0	1.5
Total Dissolved Solids (Method 160.1)	---	**371**	10.0	10.0	**444**	30.0	9.7	**415** J	30.0	9.7	**427**	30.0	9.7	**322**	5.0	5.00	**361**	30.0	9.7
FIELD PARAMETERS																			
Temperature (°C)	---	15.99	NA	NA	13.67	NA	NA	15.04	NA	NA	16.67	NA	NA	16.50	NA	NA	14.61	NA	NA
Conductivity (uS/cm)	---	693	NA	NA	688	NA	NA	434	NA	NA	546	NA	NA	576	NA	NA	334	NA	NA
Dissolved Oxygen (mg/L)	---	0.68	NA	NA	0.59	NA	NA	0.55	NA	NA	0.47	NA	NA	0.81	NA	NA	0.45	NA	NA
pH (SU)	---	7.13	NA	NA	5.18	NA	NA	7.73	NA	NA	7.12	NA	NA	6.25	NA	NA	9.02	NA	NA
ORP (mV)	---	-215.8	NA	NA	-172.6	NA	NA	-169.4	NA	NA	-140.3	NA	NA	-73.9	NA	NA	-153.9	NA	NA
Turbidity (NTU)	---	3.67	NA	NA	3.78	NA	NA	11.36	NA	NA	3.29	NA	NA	5.86	NA	NA	4.80	NA	NA
Ferrous Iron (mg/L)	---	NA	NA	NA	1.4	NA	NA	2.0	NA	NA	3.0	NA	NA	NA	NA	NA	1.8	NA	NA

TABLE L-1
GROUNDWATER ANALYTICAL RESULTS
BOEING ISAACSON-THOMPSON
REMEDIAL INVESTIGATION

Location:		IT-MW-22			IT-MW-22			IT-MW-23			IT-MW-23			IT-MW-23			IT-MW-23		
Laboratory Sample ID:	Preliminary	6692734/6692735/6692736/UZ18F			6789071/6789072/6789073/VJ53I			UA90B/UA90E/UA91B/UA91D			6580632/6580633/UM54B			6692722/6692723/6692724/UZ18B			6789065/6789066/6789067/VJ53G		
Laboratory Data Package ID:	Cleanup	1316786/UZ18			1335688/VJ53			UA90/UA91			1295735/UM54			1316786/UZ18			1335688/VJ53		
Sample Date:	Levels	6/18/2012			9/13/2012			12/12/2011			3/14/2012			6/18/2012			9/13/2012		
		Result	Reporting Limit	Detection Limit	Result	Reporting Limit	Detection Limit	Result	Reporting Limit	Detection Limit	Result	Reporting Limit	Detection Limit	Result	Reporting Limit	Detection Limit	Result	Reporting Limit	Detection Limit
VOLATILES (µg/L)																			
Method SW8260C																			
Acetone	110,000	3.0 U	5.0	3.0	3.0 U	5.0	3.0	**1100**	50	21	**600**	25	15	**740**	50	30	**140**	25	15
Acrolein	---	5.0 U	25	5.0	5.0 U	25	5.0	50 U	50	25	25 U	130	25	50 U	250	50	25 U	130	25
Acrylonitrile	0.057	1.0 U	5.0	1.0	1.0 U	5.0	1.0	10 U	10	6.0	5.0 U	25	5.0	10 U	50	10	5.0 U	25	5.0
Benzene	2	0.1 U	0.2	0.1	0.1 U	0.2	0.1	2.0 U	2.0	0.27	**0.7** J1	1.0	0.5	1.0 U	2.0	1.0	**0.6** J1	1.0	0.5
Bromobenzene	---	0.1 U	0.5	0.1	0.1 U	0.5	0.1	2.0 U	2.0	0.60	0.5 U	2.5	0.5	1.0 U	5.0	1.0	0.5 U	2.5	0.5
Bromochloromethane	---	0.1 U	0.5	0.1	0.1 U	0.5	0.1	2.0 U	2.0	0.61	0.5 U	2.5	0.5	1.0 U	5.0	1.0	0.5 U	2.5	0.5
Bromodichloromethane	17	0.1 U	0.5	0.1	0.1 U	0.5	0.1	2.0 U	2.0	0.51	0.5 U	2.5	0.5	1.0 U	5.0	1.0	0.5 U	2.5	0.5
Bromoform	---	0.1 UJ	0.5	0.1	0.1 U	0.5	0.1	2.0 UJ	2.0	0.62	0.5 U	2.5	0.5	1.0 U	5.0	1.0	0.5 U	2.5	0.5
Bromomethane	---	0.1 U	0.5	0.1	0.1 U	0.5	0.1	10 U	10	2.5	0.5 U	2.5	0.5	1.0 U	5.0	1.0	0.5 U	2.5	0.5
2-Butanone	73,000	1.0 U	5.0	1.0	1.0 U	5.0	1.0	50 U	50	8.1	**43**	25	5.0	**77**	50	10	**9.7** J1	25	5.0
n-Butylbenzene	780	0.1 U	0.5	0.1	0.1 U	0.5	0.1	2.0 U	2.0	0.25	0.5 U	2.5	0.5	1.0 U	5.0	1.0	0.5 U	2.5	0.5
sec-Butylbenzene	---	0.1 U	0.5	0.1	0.1 U	0.5	0.1	2.0 U	2.0	0.24	0.5 U	2.5	0.5	1.0 U	5.0	1.0	0.5 U	2.5	0.5
tert-Butylbenzene	---	0.1 U	0.5	0.1	0.1 U	0.5	0.1	2.0 U	2.0	0.26	0.5 U	2.5	0.5	1.0 U	5.0	1.0	0.5 U	2.5	0.5
Carbon Disulfide	3900	0.4 U	0.5	0.4	0.4 U	0.5	0.4	2.0 U	2.0	0.37	2.0 U	2.5	2.0	4.0 U	5.0	4.0	2.0 U	2.5	2
Carbon Tetrachloride	0.46	0.1 U	0.2	0.1	0.1 U	0.2	0.1	2.0 U	2.0	0.44	0.5 U	1.0	0.5	1.0 U	2.0	1.0	0.5 U	1.0	0.5
Chlorobenzene	270	0.1 U	0.5	0.1	0.1 U	0.5	0.1	2.0 U	2.0	0.23	0.5 U	2.5	0.5	1.0 U	5.0	1.0	0.5 U	2.5	0.5
Chloroethane	21,000	0.1 U	0.5	0.1	0.1 U	0.5	0.1	2.0 U	2.0	0.86	0.5 U	2.5	0.5	1.0 U	5.0	1.0	0.5 U	2.5	0.5
Chloroform	9.4	0.1 U	0.2	0.1	0.1 U	0.2	0.1	2.0 U	2.0	0.27	0.5 U	1.0	0.5	1.0 U	2.0	1.0	0.5 U	1.0	0.5
Chloromethane	10.3	0.2 U	0.5	0.2	0.2 U	0.5	0.2	5.0 U	5.0	0.95	1.0 U	2.5	1.0	2.0 U	5.0	2.0	1.0 U	2.5	1.0
2-Chlorotoluene	---	0.1 U	0.5	0.1	0.1 U	0.5	0.1	2.0 U	2.0	0.24	0.5 U	2.5	0.5	1.0 U	5.0	1.0	0.5 U	2.5	0.5
4-Chlorotoluene	2600	0.1 U	0.5	0.1	0.1 U	0.5	0.1	2.0 U	2.0	0.16	0.5 U	2.5	0.5	1.0 U	5.0	1.0	0.5 U	2.5	0.5
1,2-Dibromo-3-chloropropane	---	0.2 U	0.5	0.2	0.2 U	0.5	0.2	5.0 U	5.0	0.37	1.0 U	2.5	1.0	2.0 U	5.0	2.0	1.0 U	2.5	1.0
Dibromochloromethane	---	0.1 U	0.5	0.1	0.1 U	0.5	0.1	2.0 U	2.0	0.48	0.5 U	2.5	0.5	1.0 U	5.0	1.0	0.5 U	2.5	0.5
Dibromomethane	---	0.1 U	0.5	0.1	0.1 U	0.5	0.1	2.0 U	2.0	1.4	0.5 U	2.5	0.5	1.0 U	5.0	1.0	0.5 U	2.5	0.5
trans-1,4-Dichloro-2-butene	---	1.0 UJ	5.0	1.0	1.0 U	5.0	1.0	10 UJ	10	3.2	5.0 U	25	5.0	10 U	50	10	5.0 U	25	5.0
1,2-Dichlorobenzene	440	0.1 U	0.5	0.1	0.1 U	0.5	0.1	2.0 U	2.0	0.36	0.5 U	2.5	0.5	1.0 U	5.0	1.0	0.5 U	2.5	0.5
1,3-Dichlorobenzene	960	0.1 U	0.5	0.1	0.1 U	0.5	0.1	2.0 U	2.0	0.36	0.5 U	2.5	0.5	1.0 U	5.0	1.0	0.5 U	2.5	0.5
1,4-Dichlorobenzene	1.7	0.1 U	0.5	0.1	0.1 U	0.5	0.1	2.0 U	2.0	0.40	0.5 U	2.5	0.5	1.0 U	5.0	1.0	0.5 U	2.5	0.5
1,1-Dichloroethane	33	0.1 U	0.5	0.1	0.1 U	0.5	0.1	2.0 U	2.0	0.53	0.5 U	2.5	0.5	1.0 U	5.0	1.0	0.5 U	2.5	0.5
1,2-Dichloroethane	3.6	0.1 U	0.2	0.1	0.1 U	0.2	0.1	2.0 U	2.0	0.72	0.5 U	1.0	0.5	1.0 U	2.0	1.0	0.5 U	1.0	0.5
1,1-Dichloroethene	3.2	0.1 U	0.2	0.1	0.1 U	0.2	0.1	2.0 U	2.0	0.54	0.5 U	1.0	0.5	1.0 U	2.0	1.0	0.5 U	1.0	0.5
cis-1,2-Dichloroethene	130	0.1 U	0.2	0.1	0.1 U	0.2	0.1	2.0 U	2.0	0.43	0.5 U	1.0	0.5	1.0 U	2.0	1.0	0.5 U	1.0	0.5
trans-1,2-Dichloroethene	940	0.1 U	0.2	0.1	0.1 U	0.2	0.1	2.0 U	2.0	0.48	0.5 U	1.0	0.5	1.0 U	2.0	1.0	0.5 U	1.0	0.5
1,2-Dichloropropane	3.7	0.1 U	0.5	0.1	0.1 U	0.5	0.1	2.0 U	2.0	0.35	0.5 U	2.5	0.5	1.0 U	5.0	1.0	0.5 U	2.5	0.5
1,3-Dichloropropane	---	0.1 U	0.5	0.1	0.1 U	0.5	0.1	2.0 U	2.0	0.62	0.5 U	2.5	0.5	1.0 U	5.0	1.0	0.5 U	2.5	0.5
2,2-Dichloropropane	---	0.1 U	0.5	0.1	0.1 U	0.5	0.1	2.0 U	2.0	0.52	0.5 U	2.5	0.5	1.0 U	5.0	1.0	0.5 U	2.5	0.5
1,1-Dichloropropene	---	0.1 U	0.5	0.1	0.1 U	0.5	0.1	2.0 U	2.0	0.34	0.5 U	2.5	0.5	1.0 U	5.0	1.0	0.5 U	2.5	0.5
cis-1,3-Dichloropropene	---	0.1 U	0.2	0.1	0.1 U	0.2	0.1	2.0 U	2.0	0.61	0.5 U	1.0	0.5	1.0 U	2.0	1.0	0.5 U	1.0	0.5
trans-1,3-Dichloropropene	---	0.1 U	0.2	0.1	0.1 U	0.2	0.1	2.0 U	2.0	0.81	0.5 U	1.0	0.5	1.0 U	2.0	1.0	0.5 U	1.0	0.5
Ethylbenzene	1.7	0.1 U	0.5	0.1	0.1 U	0.5	0.1	2.0 U	2.0	0.37	0.5 U	2.5	0.5	1.0 U	5.0	1.0	0.5 U	2.5	0.5
Ethylene Dibromide	---	0.1 U	0.5	0.1	0.1 U	0.5	0.1	2.0 U	2.0	0.75	0.5 U	2.5	0.5	1.0 U	5.0	1.0	0.5 U	2.5	0.5
Hexachlorobutadiene	---	0.1 U	0.5	0.1	0.1 U	0.5	0.1	5.0 U	5.0	0.73	0.5 U	2.5	0.5	1.0 U	5.0	1.0	0.5 U	2.5	0.5
2-Hexanone	3200	1.0 U	5.0	1.0	1.0 U	5.0	1.0	50 U	50	9.0	5.0 U	25	5.0	10 U	50	10	5.0 U	25	5.0
Isopropylbenzene	270	0.1 U	0.5	0.1	0.1 U	0.5	0.1	2.0 U	2.0	0.21	0.5 U	2.5	0.5	1.0 U	5.0	1.0	0.5 U	2.5	0.5
4-Isopropyltoluene	---	0.1 U	0.5	0.1	0.1 U	0.5	0.1	2.0 U	2.0	0.26	0.5 U	2.5	0.5	1.0 U	5.0	1.0	0.5 U	2.5	0.5
Methyl Iodide	---	0.1 U	0.5	0.1	0.1 U	0.5	0.1	10 U	10	2.3	0.5 U	2.5	0.5	1.0 UJ	5.0	1.0	0.5 U	2.5	0.5
4-Methyl-2-Pentanone (MIBK)	19,000	1.0 U	5.0	1.0	1.0 U	5.0	1.0	50 U	50	9.7	5.0 U	25	5.0	10 U	50	10	5.0 U	25	5.0
Methylene Chloride	230	0.2 U	0.5	0.2	0.2 U	0.5	0.2	5.0 U	5.0	4.8	**3.4**	2.5	1.0	2.0 U	5.0	2.0	1.0 U	2.5	1.0
Naphthalene	26	0.1 U	0.5	0.1	0.1 U	0.5	0.1	5.0 U	5.0	1.2	0.5 U	2.5	0.5	1.0 U	5.0	1.0	0.5 U	2.5	0.5
n-Propylbenzene	530	0.1 U	0.5	0.1	0.1 U	0.5	0.1	2.0 U	2.0	0.23	0.5 U	2.5	0.5	1.0 U	5.0	1.0	0.5 U	2.5	0.5
Styrene	77,000	0.1 U	0.5	0.1	0.1 U	0.5	0.1	2.0 U	2.0	0.45	0.5 U	2.5	0.5	1.0 U	5.0	1.0	0.5 U	2.5	0.5
1,1,1,2-Tetrachloroethane	---	0.1 U	0.5	0.1	0.1 U	0.5	0.1	2.0 U	2.0	0.40	0.5 U	2.5	0.5	1.0 U	5.0	1.0	0.5 U	2.5	0.5
1,1,2,2-Tetrachloroethane	0.33	0.1 U	0.2	0.1	0.1 U	0.2	0.1	2.0 U	2.0	0.60	0.5 U	1.0	0.5	1.0 U	2.0	1.0	0.5 U	1.0	0.5
Tetrachloroethene	3.3	0.1 U	0.2	0.1	0.1 U	0.2	0.1	2.0 U	2.0	0.47	0.5 U	1.0	0.5	1.0 U	2.0	1.0	0.5 U	1.0	0.5
Toluene	1300	0.1 U	0.2	0.1	0.1 U	0.2	0.1	2.0 U	2.0	0.40	**0.8** J1	1.0	0.5	1.0 U	2.0	1.0	**0.7** J1	1.0	0.5
1,1,2-Trichloro-1,2,2-trifuoroethane	59,000	0.2 U	0.5	0.2	0.2 U	0.5	0.2	2.0 U	2.0	0.43	1.0 U	2.5	1.0	2.0 U	5.0	2.0	1.0 U	2.5	1.0
1,2,3-Trichlorobenzene	---	0.1 U	0.5	0.1	0.1 U	0.5	0.1	5.0 U	5.0	1.1	0.5 U	2.5	0.5	1.0 U	5.0	1.0	0.5 U	2.5	0.5

TABLE L-1
GROUNDWATER ANALYTICAL RESULTS
BOEING ISAACSON-THOMPSON
REMEDIAL INVESTIGATION

Location:		IT-MW-22			IT-MW-22			IT-MW-23			IT-MW-23			IT-MW-23			IT-MW-23		
Laboratory Sample ID:	Preliminary	6692734/6692735/6692736/UZ18F			6789071/6789072/6789073/VJ53I			UA90B/UA90E/UA91B/UA91D			6580632/6580633/UM54B			6692722/6692723/6692724/UZ18B			6789065/6789066/6789067/VJ53G		
Laboratory Data Package ID:	Cleanup	1316786/UZ18			1335688/VJ53			UA90/UA91			1295735/UM54			1316786/UZ18			1335688/VJ53		
Sample Date:	Levels	6/18/2012			9/13/2012			12/12/2011			3/14/2012			6/18/2012			9/13/2012		
		Result	Reporting Limit	Detection Limit	Result	Reporting Limit	Detection Limit	Result	Reporting Limit	Detection Limit	Result	Reporting Limit	Detection Limit	Result	Reporting Limit	Detection Limit	Result	Reporting Limit	Detection Limit
1,2,4-Trichlorobenzene	1.13	0.1 U	0.5	0.1	0.1 U	0.5	0.1	5.0 U	5.0	1.1	0.5 U	2.5	0.5	1.0 U	5.0	1.0	0.5 U	2.5	0.5
1,1,1-Trichloroethane	46,000	0.1 U	0.5	0.1	0.1 U	0.5	0.1	2.0 U	2.0	0.41	0.5 U	2.5	0.5	1.0 U	5.0	1.0	0.5 U	2.5	0.5
1,1,2-Trichloroethane	2.3	0.1 U	0.2	0.1	0.1 U	0.2	0.1	2.0 U	2.0	1.3	0.5 U	1.0	0.5	1.0 U	2.0	1.0	0.5 U	1.0	0.5
Trichloroethene	1.4	0.1 U	0.2	0.1	0.1 U	0.2	0.1	2.0 U	2.0	0.49	0.5 U	1.0	0.5	1.0 U	2.0	1.0	0.5 U	1.0	0.5
Trichlorofluoromethane	6900	0.1 U	0.5	0.1	0.1 U	0.5	0.1	2.0 U	2.0	0.37	0.5 U	2.5	0.5	1.0 U	5.0	1.0	0.5 U	2.5	0.5
1,2,3-Trichloropropane	---	0.3 U	1.0	0.3	0.3 U	1.0	0.3	5.0 U	5.0	1.3	1.5 U	5.0	1.5	3.0 U	10	3.0	1.5 U	5.0	1.5
1,2,4-Trimethylbenzene	303	0.1 U	0.5	0.1	0.1 U	0.5	0.1	2.0 U	2.0	0.24	**0.9** J1	2.5	0.5	1.0 U	5.0	1.0	**0.6** J1	2.5	0.5
1,3,5-Trimethylbenzene	303	0.1 U	0.5	0.1	0.1 U	0.5	0.1	2.0 U	2.0	0.15	**0.6** J	2.5	0.5	1.0 U	5.0	1.0	0.5 U	2.5	0.5
Vinyl Acetate	---	0.2 U	0.5	0.2	0.2 U	0.5	0.2	10 U	10	0.69	1.0 U	2.5	1.0	2.0 U	5.0	2.0	1.0 U	2.5	1.0
Vinyl Chloride	0.53	0.1 U	0.2	0.1	0.1 U	0.2	0.1	2.0 U	2.0	0.57	0.5 U	1.0	0.5	1.0 U	2.0	1.0	0.5 U	1.0	0.5
m,p-Xylene	1300	0.1 U	0.5	0.1	0.1 U	0.5	0.1	4.0 U	4.0	0.52	0.5 U	2.5	0.5	1.0 U	5.0	1.0	0.5 U	2.5	0.5
o-Xylene	1600	0.1 U	0.5	0.1	0.1 U	0.5	0.1	2.0 U	2.0	0.35	0.5 U	2.5	0.5	1.0 U	5.0	1.0	0.5 U	2.5	0.5
2-Chloroethylvinylether	---	NA	NA	NA	NA	NA	NA	10 UJ	10	2.5	NA	NA	NA	NA	NA	NA	NA	NA	NA
Bromoethane	---	NA	NA	NA	NA	NA	NA	2.0 U	2.0	0.41	NA	NA	NA	NA	NA	NA	NA	NA	NA
VOLATILES (µg/L)																			
Method SW8260C-SIM																			
Tetrachloroethene	3.3	0.019 UJ2	0.020	0.010	0.010 U	0.020	0.010	0.20 U	0.20	0.0364	0.050 U	0.10	0.050	0.033 U	0.020	0.010	0.010 U	0.020	0.010
Vinyl Chloride	0.53	0.010 U	0.020	0.010	0.010 U	0.020	0.010	**0.27**	0.20	0.0225	**0.21**	0.10	0.050	**0.54**	0.020	0.010	**0.20**	0.020	0.010
Acrylonitrile	0.057	NA	NA	NA	NA	NA	NA	0.50 U	0.50	0.158	NA	NA	NA	NA	NA	NA	NA	NA	NA
SEMIVOLATILES (µg/L)																			
Method SW8270D																			
Acenaphthene	120	0.1 U	0.5	0.1	0.1 U	0.5	0.1	1.0 U	1.0	0.55	0.5 U	3	0.5	1 U	5	1	0.1 U	0.5	0.1
Acenaphthylene	---	0.1 U	0.5	0.1	0.1 U	0.5	0.1	1.0 U	1.0	0.48	0.5 U	3	0.5	1 U	5	1	0.1 U	0.5	0.1
Anthracene	200	0.1 U	0.5	0.1	0.1 U	0.5	0.1	1.0 U	1.0	0.53	0.5 U	3	0.5	1 U	5	1	0.1 U	0.5	0.1
Benzo(a)anthracene	0.0018	0.1 U	0.5	0.1	0.1 U	0.5	0.1	1.0 U	1.0	0.52	0.5 U	3	0.5	1 U	5	1	0.1 U	0.5	0.1
Benzo(a)pyrene	0.00018	0.1 U	0.5	0.1	0.1 U	0.5	0.1	1.0 U	1.0	0.48	0.5 U	3	0.5	1 U	5	1	0.1 U	0.5	0.1
Benzo(b)fluoranthene	0.0018	0.1 U	0.5	0.1	0.1 U	0.5	0.1	NA	NA	NA	0.5 U	3	0.5	1 U	5	1	0.1 U	0.5	0.1
Benzo(g,h,i)perylene	---	0.1 U	0.5	0.1	0.1 U	0.5	0.1	1.0 U	1.0	0.55	0.5 U	3	0.5	1 U	5	1	0.1 U	0.5	0.1
Benzo(k)fluoranthene	0.0018	0.1 U	0.5	0.1	0.1 U	0.5	0.1	NA	NA	NA	0.5 U	3	0.5	1 U	5	1	0.1 U	0.5	0.1
Total Benzofluoranthenes	0.0018	NA	NA	NA	NA	NA	NA	1.0 U	1.0	0.48	NA	NA	NA	NA	NA	NA	NA	NA	NA
Benzoic Acid	2,240	6 U	15	6	6 UJ	15	6	**560**	100	51	**350**	75	30	**240**	150	60	**81** J	15	6
Benzyl Alcohol	182	5 U	15	5	5 U	15	5	5.0 U	5.0	2.0	25 U	75	25	50 U	150	50	5 U	15	5
4-Bromophenyl-phenylether	---	0.5 U	1	0.5	0.5 U	1	0.5	1.0 U	1.0	0.42	5 U	10	5	5 U	10	5	0.5 U	1	0.5
Butylbenzylphthalate	0.41	2 U	5	2	2 U	5	2	1.0 U	1.0	0.56	10 U	25	10	20 U	50	20	2 U	5	2
Di-n-Butylphthalate	47	2 U	5	2	2 U	5	2	1.0 U	1.0	0.54	10 U	25	10	20 U	50	20	2 U	5	2
Carbazole	---	0.5 U	1	0.5	0.5 U	1	0.5	1.0 U	1.0	0.31	3 U	5	3	5 U	10	5	0.5 U	1	0.5
4-Chloro-3-methylphenol	3700	0.5 U	1	0.5	0.5 U	1	0.5	5.0 U	5.0	2.4	3 U	5	3	5 U	10	5	0.5 U	1	0.5
4-Chloroaniline	---	0.5 U	1	0.5	0.5 U	1	0.5	5.0 U	5.0	2.6	3 U	5	3	5 U	10	5	0.5 U	1	0.5
bis(2-Chloroethoxy) Methane	---	0.5 U	1	0.5	0.5 U	1	0.5	1.0 U	1.0	0.56	3 U	5	3	5 U	10	5	0.5 U	1	0.5
Bis-(2-Chloroethyl) Ether	---	0.5 U	1	0.5	0.5 U	1	0.5	1.0 U	1.0	0.58	3 U	5	3	5 U	10	5	0.5 U	1	0.5
2-Chloronaphthalene	---	0.4 U	1	0.4	0.4 U	1	0.4	1.0 U	1.0	0.48	2 U	5	2	4 U	10	4	0.4 U	1	0.4
2-Chlorophenol	---	0.5 U	1	0.5	0.5 U	1	0.5	1.0 U	1.0	0.53	3 U	5	3	5 U	10	5	**0.9** J1	1	0.5
4-Chlorophenyl-phenylether	---	0.5 U	1	0.5	0.5 U	1	0.5	1.0 U	1.0	0.45	3 U	5	3	5 U	10	5	0.5 U	1	0.5
2,2'-Oxybis(1-Chloropropane)	---	0.5 U	1	0.5	0.5 U	1	0.5	1.0 U	1.0	0.62	3 U	5	3	5 U	10	5	0.5 U	1	0.5
Chrysene	0.018	0.1 U	0.5	0.1	0.1 U	0.5	0.1	1.0 U	1.0	0.55	0.5 U	3	0.5	1 U	5	1	0.1 U	0.5	0.1
Dibenz(a,h)anthracene	0.0018	0.1 U	0.5	0.1	0.1 U	0.5	0.1	1.0 U	1.0	0.48	0.5 U	3	0.5	1 U	5	1	0.1 U	0.5	0.1
Dibenzofuran	1.3	0.5 U	1	0.5	0.5 U	1	0.5	1.0 U	1.0	0.48	3 U	5	3	5 U	10	5	0.5 U	1	0.5
1,2-Dichlorobenzene	440	0.5 U	1	0.5	0.5 U	1	0.5	1.0 U	1.0	0.36	3 U	5	3	5 U	10	5	0.5 U	1	0.5
1,3-Dichlorobenzene	---	0.5 U	1	0.5	0.5 U	1	0.5	1.0 U	1.0	0.36	3 U	5	3	5 U	10	5	0.5 U	1	0.5
1,4-Dichlorobenzene	1.7	0.5 U	1	0.5	0.5 U	1	0.5	1.0 U	1.0	0.40	3 U	5	3	5 U	10	5	0.5 U	1	0.5
3,3'-Dichlorobenzidine	---	2 U	5	2	2 U	5	2	5.0 U	5.0	1.5	10 U	25	10	20 U	50	20	2 U	5	2
2,4-Dichlorophenol	---	0.5 U	1	0.5	0.5 U	1	0.5	5.0 U	5.0	2.6	3 U	5	3	5 U	10	5	0.5 U	1	0.5
Diethylphthalate	4,236	2 U	5	2	2 U	5	2	1.0 U	1.0	0.58	10 U	25	10	20 U	50	20	2 U	5	2
2,4-Dimethylphenol	660	0.5 U	1	0.5	0.5 U	1	0.5	1.0 U	1.0	0.36	**3** J	5	3	5 U	10	5	**0.5** J1	1	0.5
Dimethylphthalate	1,100,000	2 U	5	2	2 U	5	2	1.0 U	1.0	0.53	10 U	25	10	20 U	50	20	2 U	5	2
4,6-Dinitro-2-Methylphenol	---	5 U	15	5	5 U	15	5	10 U	10	3.1	25 U	75	25	50 U	150	50	5 U	15	5
2,4-Dinitrophenol	---	10 U	30	10	10 U	29	10	10 U	10	3.5	50 U	150	50	100 U	300	100	10 U	29	10
2,4-Dinitrotoluene	---	1 U	5	1	1 U	5	1	5.0 U	5.0	2.5	5 U	25	5	10 U	50	10	1 U	5	1
2,6-Dinitrotoluene	---	0.5 U	1	0.5	0.5 U	1	0.5	5.0 U	5.0	2.4	3 U	5	3	5 U	10	5	0.5 U	1	0.5
bis(2-Ethylhexyl)phthalate	1.2	2 U	5	2	2 U	5	2	1.0 U	1.0	1.9	10 U	25	10	20 U	50	20	2 U	5	2

TABLE L-1
GROUNDWATER ANALYTICAL RESULTS
BOEING ISAACSON-THOMPSON
REMEDIAL INVESTIGATION

Location:		IT-MW-22			IT-MW-22			IT-MW-23			IT-MW-23			IT-MW-23			IT-MW-23		
Laboratory Sample ID:	Preliminary	6692734/6692735/6692736/UZ18F			6789071/6789072/6789073/VJ53I			UA90B/UA90E/UA91B/UA91D			6580632/6580633/UM54B			6692722/6692723/6692724/UZ18B			6789065/6789066/6789067/VJ53G		
Laboratory Data Package ID:	Cleanup	1316786/UZ18			1335688/VJ53			UA90/UA91			1295735/UM54			1316786/UZ18			1335688/VJ53		
Sample Date:	Levels	6/18/2012			9/13/2012			12/12/2011			3/14/2012			6/18/2012			9/13/2012		
		Result	Reporting Limit	Detection Limit	Result	Reporting Limit	Detection Limit	Result	Reporting Limit	Detection Limit	Result	Reporting Limit	Detection Limit	Result	Reporting Limit	Detection Limit	Result	Reporting Limit	Detection Limit
Fluoranthene	11	0.1 U	0.5	0.1	0.1 U	0.5	0.1	1.0 U	1.0	0.52	0.5 U	3	0.5	1 U	5	1	0.1 U	0.5	0.1
Fluorene	45	0.1 U	0.5	0.1	0.1 U	0.5	0.1	1.0 U	1.0	0.56	0.5 U	3	0.5	1 U	5	1	**0.2** J1	0.5	0.1
Hexachlorobenzene	---	0.1 U	0.5	0.1	0.1 U	0.5	0.1	1.0 U	1.0	0.47	0.5 U	3	0.5	1 U	5	1	0.1 U	0.5	0.1
Hexachlorobutadiene	---	0.5 U	1	0.5	0.5 U	1	0.5	1.0 U	1.0	0.31	3 U	5	3	5 U	10	5	0.5 U	1	0.5
Hexachlorocyclopentadiene	---	5 U	15	5	5 U	15	5	5.0 U	5.0	1.2	25 U	75	25	50 U	150	50	5 U	15	5
Hexachloroethane	---	1 U	5	1	1 U	5	1	1.0 U	1.0	0.35	5 U	25	5	10 U	50	10	1 U	5	1
Indeno(1,2,3-cd)pyrene	0.0018	0.1 U	0.5	0.1	0.1 U	0.5	0.1	1.0 U	1.0	0.48	0.5 U	3	0.5	1 U	5	1	0.1 U	0.5	0.1
Isophorone	---	0.5 U	1	0.5	0.5 U	1	0.5	1.0 U	1.0	0.48	3 U	10	3	5 U	10	5	0.5 U	1	0.5
1-Methylnaphthalene	2.3	0.1 U	0.5	0.1	0.1 U	0.5	0.1	1.0 U	1.0	0.48	0.5 U	3	0.5	1 U	5	1	0.1 U	0.5	0.1
2-Methylnaphthalene	64	0.1 U	0.5	0.1	0.1 U	0.5	0.1	1.0 U	1.0	0.48	0.5 U	3	0.5	1 U	5	1	0.1 U	0.5	0.1
2-Methylphenol	3100	0.5 U	1	0.5	0.5 U	1	0.5	**1.4**	1.0	0.53	3 U	5	3	5 U	10	5	**1**	1	0.5
4-Methylphenol	330	0.5 U	1	0.5	0.5 U	1	0.5	**28**	1.0	0.52	**42**	5	3	**87**	10	5	**28**	1	0.5
Naphthalene	26	0.1 U	0.5	0.1	**0.1** J1	0.5	0.1	1.0 U	1.0	0.52	0.5 U	3	0.5	1 U	5	1	**0.1** J1	0.5	0.1
2-Nitroaniline	---	0.5 U	1	0.5	0.5 U	1	0.5	5.0 U	5.0	2.6	3 U	5	3	5 U	10	5	0.5 U	1	0.5
3-Nitroaniline	---	0.5 U	1	0.5	0.5 U	1	0.5	5.0 U	5.0	2.3	3 U	5	3	5 U	10	5	0.5 U	1	0.5
4-Nitroaniline	---	0.5 U	1	0.5	0.5 U	1	0.5	5.0 U	5.0	2.2	3 U	5	3	5 U	10	5	0.5 U	1	0.5
Nitrobenzene	---	0.5 U	1	0.5	0.5 U	1	0.5	1.0 U	1.0	0.58	3 U	5	3	5 U	10	5	0.5 U	1	0.5
2-Nitrophenol	---	0.5 U	1	0.5	0.5 U	1	0.5	5.0 U	5.0	2.0	3 U	5	3	5 U	10	5	0.5 U	1	0.5
4-Nitrophenol	---	10 U	30	10	10 U	29	10	5.0 U	5.0	2.6	50 U	150	50	100 U	300	100	10 U	29	10
N-Nitroso-Di-N-Propylamine	---	0.5 U	1	0.5	0.5 U	1	0.5	1.0 U	1.0	0.56	3 U	5	3	5 U	10	5	0.5 U	1	0.5
N-Nitrosodiphenylamine	1.96	0.5 U	1	0.5	0.5 U	1	0.5	1.0 U	1.0	0.46	3 U	5	3	5 U	10	5	0.5 U	1	0.5
Di-n-Octyl phthalate	---	2 U	5	2	2 U	5	2	1.0 U	1.0	0.51	10 U	25	10	20 U	50	20	2 U	5	2
Pentachlorophenol	---	1 U	5	1	1 UJ	5	1	5.0 U	5.0	2.4	5 U	25	5	10 U	50	10	1 UJ	5	1
Phenanthrene	---	0.1 U	0.5	0.1	0.1 U	0.5	0.1	1.0 U	1.0	0.56	0.5 U	3	0.5	1 U	5	1	0.1 U	0.5	0.1
Phenol	41,000	0.5 U	1	0.5	0.5 U	1	0.5	**78**	1.0	0.52	**82**	5	3	**350**	10	5	**82**	1	0.5
Pyrene	9.8	0.1 UJ	0.5	0.1	0.1 U	0.5	0.1	1.0 U	1.0	0.55	0.5 U	3	0.5	1 UJ	5	1	0.1 U	0.5	0.1
1,2,4-Trichlorobenzene	1.13	0.5 U	1	0.5	0.5 U	1	0.5	1.0 U	1.0	0.38	3 U	5	3	5 U	10	5	0.5 U	1	0.5
2,4,5-Trichlorophenol	---	0.5 U	1	0.5	0.5 U	1	0.5	5.0 U	5.0	2.2	3 U	5	3	5 U	10	5	0.5 U	1	0.5
2,4,6-Trichlorophenol	---	0.5 U	1	0.5	0.5 U	1	0.5	5.0 U	5.0	2.4	3 U	5	3	5 U	10	5	0.5 U	1	0.5
cPAHs (µg/L)																			
Method SW8270D-SIM																			
Benzo(a)anthracene	0.0018	0.0050 U	0.0099	0.0050	0.0048 U	0.0097	0.0048	0.010 U	0.010	0.0063	0.025 U	0.050	0.025	0.050 U	0.10	0.050	**0.019**	0.0098	0.0049
Benzo(a)pyrene	0.00018	0.0050 U	0.0099	0.0050	0.0048 U	0.0097	0.0048	0.010 U	0.010	0.0048	0.025 U	0.050	0.025	0.050 U	0.10	0.050	0.0049 U	0.0098	0.0049
Benzo(b)fluoranthene	0.0018	0.0050 U	0.0099	0.0050	0.0048 U	0.0097	0.0048	NA	NA	NA	**0.048** J1	0.050	0.025	0.050 U	0.10	0.050	0.0049 U	0.0098	0.0049
Benzo(k)fluoranthene	0.0018	0.0050 U	0.0099	0.0050	0.0048 U	0.0097	0.0048	NA	NA	NA	0.025 U	0.050	0.025	0.050 U	0.10	0.050	**0.0060** J1	0.0098	0.0049
Total Benzofluoranthenes	0.0018	NA	NA	NA	NA	NA	NA	0.020 U	0.020	0.0099	NA	NA	NA	NA	NA	NA	NA	NA	NA
Chrysene	0.018	0.0050 U	0.0099	0.0050	0.0048 U	0.0097	0.0048	0.010 U	0.010	0.0046	0.025 U	0.05	0.025	0.050 U	0.10	0.050	0.0049 U	0.0098	0.0049
Dibenz(a,h)anthracene	0.0018	0.0040 U	0.0099	0.0040	0.0039 U	0.0097	0.0039	0.010 U	0.010	0.0048	0.020 U	0.050	0.020	0.040 U	0.10	0.040	0.0039 U	0.0098	0.0039
Indeno(1,2,3-cd)pyrene	0.0018	0.0040 U	0.0099	0.0040	0.0039 U	0.0097	0.0039	0.010 U	0.010	0.0046	**0.029** J1	0.050	0.020	0.040 U	0.10	0.040	0.0039 U	0.0098	0.0039
Pyrene	9.8	0.0099 U	0.050	0.0099	0.0097 U	0.048	0.0097	NA	NA	NA	0.050 U	0.25	0.050	0.10 U	0.50	0.10	0.0098 U	0.049	0.0098
cPAH TEQ	0.00018	ND	NA	NA	ND	NA	NA	ND	NA	NA	**0.008** J	NA	NA	ND	NA	NA	**0.0025** J	NA	NA
PCBs (µg/L)																			
Method SW8082																			
Aroclor 1016	0.000023	0.0060 U	0.010	0.0060	0.0060 U	0.0099	0.0060	0.010 UJ	0.010	0.0025	0.0060 U	0.0099	0.0060	0.0060 U	0.010	0.0060	0.0057 U	0.0095	0.0057
Aroclor 1221	---	0.0060 U	0.010	0.0060	0.0060 U	0.0099	0.0060	0.010 UJ	0.010	0.0028	0.0060 U	0.0099	0.0060	0.0060 U	0.010	0.0060	0.0057 U	0.0095	0.0057
Aroclor 1232	---	0.0070 U	0.010	0.0070	0.0070 U	0.0099	0.0070	0.010 UJ	0.010	0.0028	0.0070 U	0.0099	0.0070	0.0070 U	0.010	0.0070	0.0066 U	0.0095	0.0066
Aroclor 1242	0.000023	0.0060 U	0.010	0.0060	0.0060 U	0.0099	0.0060	0.010 UJ	0.010	0.0028	0.0060 U	0.0099	0.0060	0.0060 U	0.010	0.0060	0.0057 U	0.0095	0.0057
Aroclor 1248	0.000023	0.0050 U	0.010	0.0050	0.0050 U	0.0099	0.0050	0.010 UJ	0.010	0.0028	0.0050 U	0.0099	0.0050	0.0050 U	0.010	0.0050	0.0047 U	0.0095	0.0047
Aroclor 1254	0.0000055	0.0050 U	0.010	0.0050	0.0050 U	0.0099	0.0050	0.010 UJ	0.010	0.0028	0.0050 U	0.0099	0.0050	0.0050 U	0.010	0.0050	0.0047 U	0.0095	0.0047
Aroclor 1260	0.000023	0.0050 U	0.010	0.0050	0.0050 U	0.0099	0.0050	0.010 UJ	0.010	0.0028	0.0050 U	0.0099	0.0050	0.0050 U	0.010	0.0050	0.0047 U	0.0095	0.0047
Total PCBs	0.000023	ND	NA	NA	ND	NA	NA	ND	NA	NA	ND	NA	NA	ND	NA	NA	ND	NA	NA

TABLE L-1
GROUNDWATER ANALYTICAL RESULTS
BOEING ISAACSON-THOMPSON
REMEDIAL INVESTIGATION

Location:		IT-MW-22			IT-MW-22			IT-MW-23			IT-MW-23			IT-MW-23			IT-MW-23		
Laboratory Sample ID:	Preliminary	6692734/6692735/6692736/UZ18F			6789071/6789072/6789073/VJ53I			UA90B/UA90E/UA91B/UA91D			6580632/6580633/UM54B			6692722/6692723/6692724/UZ18B			6789065/6789066/6789067/VJ53G		
Laboratory Data Package ID:	Cleanup	1316786/UZ18			1335688/VJ53			UA90/UA91			1295735/UM54			1316786/UZ18			1335688/VJ53		
Sample Date:	Levels	6/18/2012			9/13/2012			12/12/2011			3/14/2012			6/18/2012			9/13/2012		
		Result	Reporting Limit	Detection Limit	Result	Reporting Limit	Detection Limit	Result	Reporting Limit	Detection Limit	Result	Reporting Limit	Detection Limit	Result	Reporting Limit	Detection Limit	Result	Reporting Limit	Detection Limit
TOTAL PETROLEUM HYDROCARBONS (mg/L)																			
NWTPH-Dx																			
Diesel-Range Organics	0.5	0.029 U	0.097	0.029	0.030 U	0.098	0.030	0.10 U	0.10	0.022	0.076 U	0.27	0.076	**0.200**	0.110	0.033	**0.100**	0.099	0.030
Oil-Range Organics	0.5	0.068 U	0.240	0.068	0.069 U	0.250	0.069	0.20 U	0.20	0.044	1.1 U	3.2	1.1	**0.082** J1	0.270	0.076	**0.076** J1	0.250	0.069
NWTPH-G																			
Gasoline-Range Organics	1.0/0.8	0.05 U	0.25	0.05	0.05 U	0.25	0.05	1.2 U	1.2	0.30	0.05 U	0.25	0.05	0.05 U	0.25	0.05	0.05 U	0.25	0.05
TOTAL METALS (µg/L)																			
Method 200.8																			
Antimony	---	0.33 U	1.0	0.33	0.33 U	1.0	0.33	**9.5**	0.2	0.010	**6.0**	1.0	0.42	**0.99** J1	1.0	0.33	**1.9**	1.0	0.33
Arsenic	---	**3810**	100	1.0	**11,500**	40.0	8.0	**77,100**	500	120	**76800**	100	47.5	**34200**	100	10.0	**36,100**	200	40.0
Barium	---	**12.5**	2.0	0.41	**16.7**	2.0	0.41	**133**	0.5	0.020	**116**	2.0	0.69	**56.3**	2.0	0.41	**43.3**	2.0	0.41
Beryllium	---	0.025 U	0.50	0.025	**0.051** J1	0.50	0.025	1 U	1	0.10	3.3 U	0.50	0.13	**0.50**	0.50	0.025	**0.61**	0.50	0.025
Cadmium	---	0.048 U	0.50	0.048	0.082 U	0.50	0.082	**1.1**	0.1	0.010	**0.52**	0.50	0.20	**0.20** J1	0.50	0.048	0.082 U	0.50	0.082
Chromium	---	**1.1** J1	2.0	0.50	**2.1**	2.0	0.50	**38**	2	0.22	**39.1**	2.0	0.60	**25.3**	2.0	0.10	**20.2**	2.0	0.50
Copper	---	**2.3**	2.0	0.15	**10.7**	2.0	0.40	**1790**	5	1.58	**837**	2.0	0.38	**1600**	2.0	0.75	**34.0**	2.0	0.40
Lead	---	**0.041** J1	1.0	0.034	**0.063** J1	1.0	0.034	**2.8**	0.1	0.046	**1.8**	1.0	0.080	**2.0**	1.0	0.034	**0.22** J1	1.0	0.034
Nickel	---	**0.39** J1	2.0	0.13	**0.75** J1	2.0	0.35	**303**	2	0.40	**253**	2.0	0.50	**88.1**	2.0	0.13	**53.8**	2.0	0.35
Selenium	---	0.18 U	2.0	0.18	0.50 U	2.0	0.50	**8.7**	0.5	0.127	**4.5**	2.0	0.27	**0.80** J1	2.0	0.18	**1.1** J1	2.0	0.50
Silver	---	0.10 U	0.50	0.10	0.10 U	0.50	0.10	**0.5**	0.2	0.008	0.098 U	0.50	0.098	0.10 U	0.50	0.10	0.10 U	0.50	0.10
Thallium	---	0.029 U	0.50	0.029	0.15 U	0.50	0.15	**0.7**	0.2	0.004	**0.77**	0.50	0.15	**0.40** J1	0.50	0.029	0.15 U	0.50	0.15
Zinc	---	**1.6** J1	15.0	1.1	**2.7** J1	15.0	1.1	**390**	20	2.5	**225**	15.0	4.0	**195**	15.0	1.1	**123**	15.0	1.1
Method SW7196A (mg/L)																			
Chromium VI	0.00058	0.010 U	0.010	0.00300	0.010 U	0.010	0.00300	**0.037**	0.010	0.00300	**0.018**	0.010	0.00300	0.010 U	0.010	0.00300	0.010 U	0.010	0.00300
Method SW7470A/EPA 1631E (ng/L)																			
Mercury	12	**1.03**	0.500	0.160	**2.64** J1	5.00	1.60	**51.8**	20.0	2.60	8.00 U	25.0	8.00	3.20 U	10.00	3.20	**245**	10.0	3.20
DISSOLVED METALS (µg/L)																			
Methods 200.8/SW7196A																			
Antimony	150	0.33 U	1.0	0.33	0.33 U	1.0	0.33	**10.2**	0.2	0.010	**6.6**	1.0	0.42	**0.44** J1	1.0	0.33	**2.1**	1.0	0.33
Arsenic	8	**4000**	100	1.0	**10,700**	40.0	8.0	**78,200**	500	120	**80,000**	100	47.5	**29,000**	100	10.0	**34,400**	200	40.0
Barium	770	**11.5**	2.0	0.41	**15.2**	2.0	0.41	**119**	0.5	0.020	**103**	2.0	0.69	**23.9**	2.0	0.41	**28.4**	2.0	0.41
Beryllium	12	0.025 U	0.50	0.025	**0.028** J1	0.50	0.025	1 U	1	0.10	3.3 U	0.50	0.13	**0.25** J1	0.50	0.025	**0.48** J1	0.50	0.025
Cadmium	0.25	0.048 U	0.50	0.048	0.082 U	0.50	0.082	**0.8**	0.1	0.010	0.20 U	0.50	0.20	**0.056** J1	0.50	0.048	0.082 U	0.50	0.082
Chromium	74	**1.1** J1	2.0	0.50	**2.1**	2.0	0.50	**39**	2	0.22	**39.9**	2.0	0.60	**20.0**	2.0	0.10	**18.7**	2.0	0.50
Copper	8	0.42 UJ2	2.0	0.15	**0.62** J1	2.0	0.40	**2050**	5	1.58	**417**	2.0	0.38	**28.4**	2.0	0.75	**19.0**	2.0	0.40
Lead	2.5	0.034 U	1.0	0.034	0.034 U	1.0	0.034	**2.2**	0.1	0.046	**1.9**	1.0	0.080	**0.21** J1	1.0	0.034	**0.17** J1	1.0	0.034
Nickel	8.2	**0.43** J1	2.0	0.13	**0.72** J1	2.0	0.35	**297**	2	0.40	**241**	2.0	0.50	**61.3**	2.0	0.13	**50.2**	2.0	0.35
Selenium	5	0.18 U	2.0	0.18	0.50 U	2.0	0.50	**9.9**	0.5	0.127	**4.9**	2.0	0.27	**0.67** J1	2.0	0.18	**1.2** J1	2.0	0.50
Silver	22	0.10 U	0.50	0.10	0.10 U	0.50	0.10	**0.5**	0.2	0.008	0.098 U	0.50	0.098	0.10 U	0.50	0.10	0.10 U	0.50	0.10
Thallium	0.47	0.029 U	0.50	0.029	0.15 U	0.50	0.15	**0.5**	0.2	0.004	**0.25** J1	0.50	0.15	0.029 U	0.50	0.029	0.15 U	0.50	0.15
Zinc	56	**1.3** J1	15.0	1.1	**2.4** J1	15.0	1.1	**290**	20	2.5	**159**	15.0	4.0	**36.8**	15.0	1.1	**57.7**	15.0	1.1
Method SW7470A/EPA 1631E (ng/L)																			
Mercury	12	**0.654**	0.500	0.160	**2.90** J1	5.00	1.60	**53.1**	20.0	2.60	8.00 U	25.0	8.00	3.20 U	10.00	3.20	**137**	10.0	3.20
CONVENTIONALS (mg/L)																			
Chloride (Method 300.0)	---	**2.4**	0.40	0.20	**3.3**	0.40	0.20	NA	NA	NA	NA	NA	NA	**38.7**	8.0	4.0	**31.3**	20.0	10.0
Nitrate (Method 300.0)	---	0.050 U	0.10	0.050	0.050 U	0.10	0.050	0.1 U	0.1	0.007	5.0 U	10.0	5.0	0.050 U	0.10	0.050	2.5 U	5.0	2.5
Sulfate (Method 300.0)	---	**24.8**	5.0	1.5	**9.5**	5.0	1.5	**148**	5.0	2.95	**124**	100	30.0	**1.8**	1.0	0.30	**25.8**	5.0	1.5
Total Dissolved Solids (Method 160.1)	---	**277**	30.0	9.7	**304**	30.0	9.7	**2360**	20.0	20.0	**2470**	240	77.6	**1350** J	120	38.8	**1130**	120	38.8
FIELD PARAMETERS																			
Temperature (°C)	---	15.39	NA	NA	18.02	NA	NA	15.85	NA	NA	15.14	NA	NA	15.17	NA	NA	16.39	NA	NA
Conductivity (uS/cm)	---	279	NA	NA	514	NA	NA	6625	NA	NA	2532	NA	NA	1063	NA	NA	1353	NA	NA
Dissolved Oxygen (mg/L)	---	0.45	NA	NA	1.26	NA	NA	0.71	NA	NA	0.51	NA	NA	0.53	NA	NA	0.22	NA	NA
pH (SU)	---	7.57	NA	NA	6.81	NA	NA	11.55	NA	NA	11.91	NA	NA	9.39	NA	NA	9.60	NA	NA
ORP (mV)	---	-158.9	NA	NA	-127	NA	NA	14.6	NA	NA	-316.5	NA	NA	-256.1	NA	NA	-194.0	NA	NA
Turbidity (NTU)	---	2.57	NA	NA	11.9	NA	NA	31.81	NA	NA	25	NA	NA	31.95	NA	NA	7.80	NA	NA
Ferrous Iron (mg/L)	---	2.2	NA	NA	3.6	NA	NA	NA	NA	NA	0.0	NA	NA	2.0	NA	NA	1.2	NA	NA

TABLE L-1
GROUNDWATER ANALYTICAL RESULTS
BOEING ISAACSON-THOMPSON
REMEDIAL INVESTIGATION

Location:		IT-MW-24			IT-MW-24			IT-MW-24			IT-MW-24			IT-MW-25			IT-MW-25		
Laboratory Sample ID:	Preliminary	UA54D/UA54M/UA55D/UA55L/UB47D/UB47L			6571473/6571474/UL18E			6692737/6692738/6692739/UZ18G			6788001/6788002/6788003/VJ03E			UB08B/UB08G/UB09B/UB09G			6571469/6571470/UL18C		
Laboratory Data Package ID:	Cleanup	UA54/UA55/UB47			1293989/UL18			1316786/UZ18			1335480/VJ03			UB08/UB09			1293989/UL18		
Sample Date:	Levels	12/08/2011			03/07/2012			6/18/2012			9/11/2012			12/13/2011			03/07/2012		
		Result	Reporting Limit	Detection Limit	Result	Reporting Limit	Detection Limit	Result	Reporting Limit	Detection Limit	Result	Reporting Limit	Detection Limit	Result	Reporting Limit	Detection Limit	Result	Reporting Limit	Detection Limit
VOLATILES (µg/L)																			
Method SW8260C																			
Acetone	110,000	**1200**	50	21	**1000**	250	150	**700** J	100	60	**150** J	50	30	5.0 U	5.0	2.1	3.0 U	5.0	3.0
Acrolein	---	50 UJ	50	25	250 U	1300	250	100 UJ	500	100	50 UJ	250	50	5.0 U	5.0	2.5	5.0 U	25	5.0
Acrylonitrile	0.057	10 U	10	6.0	50 U	250	50	20 UJ	100	20	10 UJ	50	10	1.0 U	1.0	0.60	1.0 U	5.0	1.0
Benzene	2	2.0 U	2.0	0.27	5.0 U	10	5.0	2.0 UJ	4.0	2.0	**1.0** J, J1	2.0	1.0	0.2 U	0.2	0.03	0.1 U	0.2	0.1
Bromobenzene	---	2.0 U	2.0	0.60	5.0 U	25	5.0	2.0 UJ	10	2.0	1.0 UJ	5.0	1.0	0.2 U	0.2	0.06	0.1 U	0.5	0.1
Bromochloromethane	---	2.0 U	2.0	0.61	5.0 U	25	5.0	2.0 UJ	10	2.0	1.0 UJ	5.0	1.0	0.2 U	0.2	0.06	0.1 U	0.5	0.1
Bromodichloromethane	17	2.0 U	2.0	0.51	5.0 U	25	5.0	2.0 UJ	10	2.0	1.0 UJ	5.0	1.0	0.2 U	0.2	0.05	0.1 U	0.5	0.1
Bromoform	---	2.0 U	2.0	0.62	5.0 U	25	5.0	2.0 UJ	10	2.0	1.0 UJ	5.0	1.0	0.2 UJ	0.2	0.06	0.1 U	0.5	0.1
Bromomethane	---	10 U	10	2.5	5.0 U	25	5.0	2.0 UJ	10	2.0	1.0 UJ	5.0	1.0	1.0 U	1.0	0.25	0.1 U	0.5	0.1
2-Butanone	73,000	**110** J	50	8.1	**77** J1	250	50	**76** J, J1	100	20	**28** J, J1	50	10	5.0 U	5.0	0.81	1.0 U	5.0	1.0
n-Butylbenzene	780	2.0 U	2.0	0.25	5.0 U	25	5.0	2.0 UJ	10	2.0	1.0 UJ	5.0	1.0	0.2 U	0.2	0.02	0.1 U	0.5	0.1
sec-Butylbenzene	---	2.0 U	2.0	0.24	5.0 U	25	5.0	2.0 UJ	10	2.0	1.0 UJ	5.0	1.0	0.2 U	0.2	0.02	0.1 U	0.5	0.1
tert-Butylbenzene	---	2.0 U	2.0	0.26	5.0 U	25	5.0	2.0 UJ	10	2.0	1.0 UJ	5.0	1.0	0.2 U	0.2	0.03	0.1 U	0.5	0.1
Carbon Disulfide	3900	2.0 U	2.0	0.37	20 U	25	20	8.0 UJ	10	8.0	4.0 UJ	5.0	4.0	0.2 U	0.2	0.04	0.4 U	0.5	0.4
Carbon Tetrachloride	0.46	2.0 U	2.0	0.44	5.0 U	10	5.0	2.0 UJ	4.0	2.0	1.0 UJ	2.0	1.0	0.2 U	0.2	0.04	0.1 U	0.2	0.1
Chlorobenzene	270	2.0 U	2.0	0.23	5.0 U	25	5.0	2.0 UJ	10	2.0	1.0 UJ	5.0	1.0	0.2 U	0.2	0.02	0.1 U	0.5	0.1
Chloroethane	21,000	2.0 U	2.0	0.86	5.0 U	25	5.0	2.0 UJ	10	2.0	1.0 UJ	5.0	1.0	0.2 U	0.2	0.09	0.1 U	0.5	0.1
Chloroform	9.4	2.0 U	2.0	0.27	5.0 U	10	5.0	2.0 UJ	4.0	2.0	1.0 UJ	2.0	1.0	0.2 U	0.2	0.03	0.1 U	0.2	0.1
Chloromethane	10.3	5.0 U	5.0	0.95	10 U	25	10	4.0 UJ	10	4.0	2.0 UJ	5.0	2.0	0.5 U	0.5	0.10	0.2 U	0.5	0.2
2-Chlorotoluene	---	2.0 U	2.0	0.24	5.0 U	25	5.0	2.0 UJ	10	2.0	1.0 UJ	5.0	1.0	0.2 U	0.2	0.02	0.1 U	0.5	0.1
4-Chlorotoluene	2600	2.0 U	2.0	0.16	5.0 U	25	5.0	2.0 UJ	10	2.0	1.0 UJ	5.0	1.0	0.2 U	0.2	0.02	0.1 U	0.5	0.1
1,2-Dibromo-3-chloropropane	---	5.0 U	5.0	0.37	10 U	25	10	4.0 UJ	10	4.0	2.0 UJ	5.0	2.0	0.5 U	0.5	0.04	0.2 U	0.5	0.2
Dibromochloromethane	---	2.0 U	2.0	0.48	5.0 U	25	5.0	2.0 UJ	10	2.0	1.0 UJ	5.0	1.0	0.2 U	0.2	0.05	0.1 U	0.5	0.1
Dibromomethane	---	2.0 U	2.0	1.4	5.0 U	25	5.0	2.0 UJ	10	2.0	1.0 UJ	5.0	1.0	0.2 U	0.2	0.14	0.1 U	0.5	0.1
trans-1,4-Dichloro-2-butene	---	10 UJ	10	3.2	50 U	250	50	20 UJ	100	20	10 UJ	50	10	1.0 U	1.0	0.32	1.0 U	5.0	1.0
1,2-Dichlorobenzene	440	2.0 U	2.0	0.36	5.0 U	25	5.0	2.0 UJ	10	2.0	1.0 UJ	5.0	1.0	0.2 U	0.2	0.04	0.1 U	0.5	0.1
1,3-Dichlorobenzene	960	2.0 U	2.0	0.36	5.0 U	25	5.0	2.0 UJ	10	2.0	1.0 UJ	5.0	1.0	0.2 U	0.2	0.04	0.1 U	0.5	0.1
1,4-Dichlorobenzene	1.7	2.0 U	2.0	0.40	5.0 U	25	5.0	2.0 UJ	10	2.0	1.0 UJ	5.0	1.0	0.2 U	0.2	0.04	0.1 U	0.5	0.1
1,1-Dichloroethane	33	2.0 U	2.0	0.53	5.0 U	25	5.0	2.0 UJ	10	2.0	1.0 UJ	5.0	1.0	**0.6**	0.2	0.05	**0.2** J1	0.5	0.1
1,2-Dichloroethane	3.6	2.0 U	2.0	0.72	5.0 U	10	5.0	2.0 UJ	4.0	2.0	1.0 UJ	2.0	1.0	0.2 U	0.2	0.07	0.1 U	0.2	0.1
1,1-Dichloroethene	3.2	2.0 U	2.0	0.54	5.0 U	10	5.0	2.0 UJ	4.0	2.0	1.0 UJ	2.0	1.0	0.2 U	0.2	0.05	0.1 U	0.2	0.1
cis-1,2-Dichloroethene	130	2.0 U	2.0	0.43	5.0 U	10	5.0	2.0 UJ	4.0	2.0	1.0 UJ	2.0	1.0	**1.4**	0.2	0.04	**0.7**	0.2	0.1
trans-1,2-Dichloroethene	940	2.0 U	2.0	0.48	5.0 U	10	5.0	2.0 UJ	4.0	2.0	1.0 UJ	2.0	1.0	0.2 U	0.2	0.05	0.1 U	0.2	0.1
1,2-Dichloropropane	3.7	2.0 U	2.0	0.35	5.0 U	25	5.0	2.0 UJ	10	2.0	1.0 UJ	5.0	1.0	0.2 U	0.2	0.04	0.1 U	0.5	0.1
1,3-Dichloropropane	---	2.0 U	2.0	0.62	5.0 U	25	5.0	2.0 UJ	10	2.0	1.0 UJ	5.0	1.0	0.2 U	0.2	0.06	0.1 U	0.5	0.1
2,2-Dichloropropane	---	2.0 U	2.0	0.52	5.0 U	25	5.0	2.0 UJ	10	2.0	1.0 UJ	5.0	1.0	0.2 U	0.2	0.05	0.1 U	0.5	0.1
1,1-Dichloropropene	---	2.0 U	2.0	0.34	5.0 U	25	5.0	2.0 UJ	10	2.0	1.0 UJ	5.0	1.0	0.2 U	0.2	0.03	0.1 U	0.5	0.1
cis-1,3-Dichloropropene	---	2.0 U	2.0	0.61	5.0 U	10	5.0	2.0 UJ	4.0	2.0	1.0 UJ	2.0	1.0	0.2 U	0.2	0.06	0.1 U	0.2	0.1
trans-1,3-Dichloropropene	---	2.0 U	2.0	0.81	5.0 U	10	5.0	2.0 UJ	4.0	2.0	1.0 UJ	2.0	1.0	0.2 U	0.2	0.08	0.1 U	0.2	0.1
Ethylbenzene	1.7	2.0 U	2.0	0.37	5.0 U	25	5.0	2.0 UJ	10	2.0	1.0 UJ	5.0	1.0	0.2 U	0.2	0.04	0.1 U	0.5	0.1
Ethylene Dibromide	---	2.0 U	2.0	0.75	5.0 U	25	5.0	2.0 UJ	10	2.0	1.0 UJ	5.0	1.0	0.2 U	0.2	0.08	0.1 U	0.5	0.1
Hexachlorobutadiene	---	5.0 U	5.0	0.73	5.0 U	25	5.0	2.0 UJ	10	2.0	1.0 UJ	5.0	1.0	0.5 U	0.5	0.07	0.1 U	0.5	0.1
2-Hexanone	3200	50 U	50	9.0	50 U	250	50	20 UJ	100	20	10 UJ	50	10	5.0 U	5.0	0.90	1.0 U	5.0	1.0
Isopropylbenzene	270	2.0 U	2.0	0.21	5.0 U	25	5.0	2.0 UJ	10	2.0	1.0 UJ	5.0	1.0	0.2 U	0.2	0.02	0.1 U	0.5	0.1
4-Isopropyltoluene	---	2.0 U	2.0	0.26	5.0 U	25	5.0	2.0 UJ	10	2.0	1.0 UJ	5.0	1.0	0.2 U	0.2	0.03	0.1 U	0.5	0.1
Methyl Iodide	---	10 U	10	2.3	5.0 U	25	5.0	2.0 UJ	10	2.0	1.0 UJ	5.0	1.0	1.0 U	1.0	0.23	0.1 U	0.5	0.1
4-Methyl-2-Pentanone (MIBK)	19,000	50 U	50	9.7	50 U	250	50	20 UJ	100	20	10 UJ	50	10	5.0 U	5.0	0.97	1.0 U	5.0	1.0
Methylene Chloride	230	5.0 U	5.0	4.8	10 U	25	10	4.0 UJ	10	4.0	2.0 UJ	5.0	2.0	0.5 U	0.5	0.48	0.2 U	0.5	0.2
Naphthalene	26	5.0 U	5.0	1.2	5.0 U	25	5.0	2.0 UJ	10	2.0	1.0 UJ	5.0	1.0	0.5 U	0.5	0.12	0.1 U	0.5	0.1
n-Propylbenzene	530	2.0 U	2.0	0.23	5.0 U	25	5.0	2.0 UJ	10	2.0	1.0 UJ	5.0	1.0	0.2 U	0.2	0.02	0.1 U	0.5	0.1
Styrene	77,000	2.0 U	2.0	0.45	5.0 U	25	5.0	2.0 UJ	10	2.0	1.0 UJ	5.0	1.0	0.2 U	0.2	0.04	0.1 U	0.5	0.1
1,1,1,2-Tetrachloroethane	---	2.0 U	2.0	0.40	5.0 U	25	5.0	2.0 UJ	10	2.0	1.0 UJ	5.0	1.0	0.2 U	0.2	0.04	0.1 U	0.5	0.1
1,1,2,2-Tetrachloroethane	0.33	2.0 U	2.0	0.60	5.0 U	10	5.0	2.0 UJ	4.0	2.0	1.0 UJ	2.0	1.0	0.2 U	0.2	0.06	0.1 U	0.2	0.1
Tetrachloroethene	3.3	2.0 U	2.0	0.47	5.0 U	10	5.0	2.0 UJ	4.0	2.0	1.0 UJ	2.0	1.0	0.2 U	0.2	0.05	**0.3**	0.2	0.1
Toluene	1300	2.0 U	2.0	0.40	5.0 U	10	5.0	2.0 UJ	4.0	2.0	**1.2** J, J1	2.0	1.0	0.2 U	0.2	0.04	0.1 U	0.2	0.1
1,1,2-Trichloro-1,2,2-trifuoroethane	59,000	2.0 U	2.0	0.43	10 U	25	10	4.0 UJ	10	4.0	2.0 UJ	5.0	2.0	0.2 U	0.2	0.04	0.2 U	0.5	0.2
1,2,3-Trichlorobenzene	---	5.0 U	5.0	1.1	5.0 U	25	5.0	2.0 UJ	10	2.0	1.0 UJ	5.0	1.0	0.5 U	0.5	0.11	0.1 U	0.5	0.1

TABLE L-1
GROUNDWATER ANALYTICAL RESULTS
BOEING ISAACSON-THOMPSON
REMEDIAL INVESTIGATION

Location:		IT-MW-24			IT-MW-24			IT-MW-24			IT-MW-24			IT-MW-25			IT-MW-25		
Laboratory Sample ID:	Preliminary	UA54D/UA54M/UA55D/UA55L/UB47D/UB47L			6571473/6571474/UL18E			6692737/6692738/6692739/UZ18G			6788001/6788002/6788003/VJ03E			UB08B/UB08G/UB09B/UB09G			6571469/6571470/UL18C		
Laboratory Data Package ID:	Cleanup	UA54/UA55/UB47			1293989/UL18			1316786/UZ18			1335480/VJ03			UB08/UB09			1293989/UL18		
Sample Date:	Levels	12/08/2011			03/07/2012			6/18/2012			9/11/2012			12/13/2011			03/07/2012		
		Result	Reporting Limit	Detection Limit	Result	Reporting Limit	Detection Limit	Result	Reporting Limit	Detection Limit	Result	Reporting Limit	Detection Limit	Result	Reporting Limit	Detection Limit	Result	Reporting Limit	Detection Limit
1,2,4-Trichlorobenzene	1.13	5.0 U	5.0	1.1	5.0 U	25	5.0	2.0 UJ	10	2.0	1.0 UJ	5.0	1.0	0.5 U	0.5	0.11	0.1 U	0.5	0.1
1,1,1-Trichloroethane	46,000	2.0 U	2.0	0.41	5.0 U	25	5.0	2.0 UJ	10	2.0	1.0 UJ	5.0	1.0	0.2 U	0.2	0.04	0.1 U	0.5	0.1
1,1,2-Trichloroethane	2.3	2.0 U	2.0	1.3	5.0 U	10	5.0	2.0 UJ	4.0	2.0	1.0 UJ	2.0	1.0	0.2 U	0.2	0.13	0.1 U	0.2	0.1
Trichloroethene	1.4	2.0 U	2.0	0.49	5.0 U	10	5.0	2.0 UJ	4.0	2.0	1.0 UJ	2.0	1.0	0.2 U	0.2	0.05	**0.3**	0.2	0.1
Trichlorofluoromethane	6900	2.0 U	2.0	0.37	5.0 U	25	5.0	2.0 UJ	10	2.0	1.0 UJ	5.0	1.0	0.2 U	0.2	0.04	0.1 U	0.5	0.1
1,2,3-Trichloropropane	---	5.0 U	5.0	1.3	15 U	50	15	6.0 UJ	20	6.0	3.0 UJ	10	3.0	0.5 U	0.5	0.13	0.3 U	1.0	0.3
1,2,4-Trimethylbenzene	303	2.0 U	2.0	0.24	5.0 U	25	5.0	2.0 UJ	10	2.0	1.0 UJ	5.0	1.0	0.2 U	0.2	0.02	0.1 U	0.5	0.1
1,3,5-Trimethylbenzene	303	2.0 U	2.0	0.15	5.0 U	25	5.0	2.0 UJ	10	2.0	1.0 UJ	5.0	1.0	0.2 U	0.2	0.02	0.1 U	0.5	0.1
Vinyl Acetate	---	10 UJ	10	0.69	10 U	25	10	4.0 UJ	10	4.0	2.0 UJ	5.0	2.0	1.0 U	1.0	0.07	0.2 U	0.5	0.2
Vinyl Chloride	0.53	2.0 U	2.0	0.57	5.0 U	10	5.0	2.0 UJ	4.0	2.0	1.0 UJ	2.0	1.0	**0.4**	0.2	0.06	0.1 U	0.2	0.1
m,p-Xylene	1300	4.0 U	4.0	0.52	5.0 U	25	5.0	2.0 UJ	10	2.0	1.0 UJ	5.0	1.0	0.4 U	0.4	0.05	0.1 U	0.5	0.1
o-Xylene	1600	2.0 U	2.0	0.35	5.0 U	25	5.0	2.0 UJ	10	2.0	1.0 UJ	5.0	1.0	**0.2**	0.2	0.04	0.1 U	0.5	0.1
2-Chloroethylvinylether	---	10 U	10	2.5	NA	NA	NA	NA	NA	NA	NA	NA	NA	1.0 U	1.0	0.25	NA	NA	NA
Bromoethane	---	2.0 U	2.0	0.41	NA	NA	NA	NA	NA	NA	NA	NA	NA	0.2 U	0.2	0.04	NA	NA	NA
VOLATILES (µg/L)																			
Method SW8260C-SIM																			
Tetrachloroethene	3.3	0.40 U	0.40	0.0728	0.50 UJ	1.0	0.50	0.10 U	0.20	0.10	0.10 U	0.20	0.10	**0.028**	0.020	0.0036	**0.30**	0.020	0.010
Vinyl Chloride	0.53	0.40 U	0.40	0.0450	0.50 UJ	1.0	0.50	0.10 U	0.20	0.10	**0.11** J1	0.20	0.10	**0.33**	0.020	0.0022	**0.023**	0.020	0.010
Acrylonitrile	0.057	1.0 U	1.0	0.316	NA	NA	NA	NA	NA	NA	NA	NA	NA	0.050 U	0.050	0.0158	NA	NA	NA
SEMIVOLATILES (µg/L)																			
Method SW8270D																			
Acenaphthene	120	1.1 U	1.1	0.59	0.1 U	0.5	0.1	1 U	5	1	0.1 U	0.5	0.1	1.0 U	1.0	0.55	0.1 U	0.5	0.1
Acenaphthylene	---	1.1 U	1.1	0.52	0.1 U	0.5	0.1	1 U	5	1	0.1 U	0.5	0.1	1.0 U	1.0	0.48	0.1 U	0.5	0.1
Anthracene	200	1.1 U	1.1	0.58	0.1 U	0.5	0.1	1 U	5	1	0.1 U	0.5	0.1	1.0 U	1.0	0.53	0.1 U	0.5	0.1
Benzo(a)anthracene	0.0018	1.1 U	1.1	0.57	0.1 U	0.5	0.1	1 U	5	1	0.1 U	0.5	0.1	1.0 U	1.0	0.52	0.1 U	0.5	0.1
Benzo(a)pyrene	0.00018	1.1 U	1.1	0.53	0.1 U	0.5	0.1	1 U	5	1	0.1 U	0.5	0.1	1.0 U	1.0	0.48	0.1 U	0.5	0.1
Benzo(b)fluoranthene	0.0018	NA	NA	NA	0.1 U	0.5	0.1	1 U	5	1	0.1 U	0.5	0.1	NA	NA	NA	0.1 U	0.5	0.1
Benzo(g,h,i)perylene	---	1.1 U	1.1	0.59	0.1 U	0.5	0.1	1 U	5	1	0.1 U	0.5	0.1	1.0 U	1.0	0.55	0.1 U	0.5	0.1
Benzo(k)fluoranthene	0.0018	NA	NA	NA	0.1 U	0.5	0.1	1 U	5	1	0.1 U	0.5	0.1	NA	NA	NA	0.1 U	0.5	0.1
Total Benzofluoranthenes	0.0018	1.1 U	1.1	0.52	NA	NA	NA	NA	NA	NA	NA	NA	NA	1.0 U	1.0	0.48	NA	NA	NA
Benzoic Acid	2,240	**3400**	270	140	**420** J	14	6	**420**	150	60	**440**	150	59	10 UJ	10	5.1	6 UJ	14	6
Benzyl Alcohol	182	5.4 U	5.4	2.2	5 U	14	5	50 U	150	50	5 U	15	5	5.0 U	5.0	2.0	5 U	14	5
4-Bromophenyl-phenylether	---	1.1 U	1.1	0.46	0.5 U	1	0.5	5 U	10	5	0.5 U	1	0.5	1.0 U	1.0	0.42	0.5 U	0.9	0.5
Butylbenzylphthalate	0.41	1.1 U	1.1	0.61	2 U	5	2	20 U	50	20	2 U	5	2	1.0 U	1.0	0.56	2 U	5	2
Di-n-Butylphthalate	47	1.1 U	1.1	0.58	2 U	5	2	20 U	50	20	2 U	5	2	1.0 U	1.0	0.54	2 U	5	2
Carbazole	---	1.1 U	1.1	0.33	0.5 U	1	0.5	5 U	10	5	0.5 U	1	0.5	1.0 U	1.0	0.31	0.5 U	0.9	0.5
4-Chloro-3-methylphenol	3700	5.4 U	5.4	2.6	0.5 U	1	0.5	5 U	10	5	0.5 U	1	0.5	5.0 U	5.0	2.4	0.5 U	0.9	0.5
4-Chloroaniline	---	5.4 U	5.4	2.8	0.5 U	1	0.5	5 U	10	5	0.5 U	1	0.5	5.0 U	5.0	2.6	0.5 U	0.9	0.5
bis(2-Chloroethoxy) Methane	---	1.1 U	1.1	0.61	0.5 U	1	0.5	5 U	10	5	0.5 U	1	0.5	1.0 U	1.0	0.56	0.5 U	0.9	0.5
Bis-(2-Chloroethyl) Ether	---	1.1 U	1.1	0.63	0.5 U	1	0.5	5 U	10	5	0.5 U	1	0.5	1.0 U	1.0	0.58	0.5 U	0.9	0.5
2-Chloronaphthalene	---	1.1 U	1.1	0.52	0.4 U	1	0.4	4 U	10	4	0.4 U	1	0.4	1.0 U	1.0	0.48	0.4 U	0.9	0.4
2-Chlorophenol	---	1.1 U	1.1	0.58	0.5 U	1	0.5	5 U	10	5	0.5 U	1	0.5	1.0 U	1.0	0.53	0.5 U	0.9	0.5
4-Chlorophenyl-phenylether	---	1.1 U	1.1	0.49	0.5 U	1	0.5	5 U	10	5	0.5 U	1	0.5	1.0 U	1.0	0.45	0.5 U	0.9	0.5
2,2'-Oxybis(1-Chloropropane)	---	1.1 U	1.1	0.68	0.5 U	1	0.5	5 U	10	5	0.5 U	1	0.5	1.0 U	1.0	0.62	0.5 U	0.9	0.5
Chrysene	0.018	1.1 U	1.1	0.60	0.1 U	0.5	0.1	1 U	5	1	0.1 U	0.5	0.1	1.0 U	1.0	0.55	0.1 U	0.5	0.1
Dibenz(a,h)anthracene	0.0018	1.1 U	1.1	0.52	0.1 U	0.5	0.1	1 U	5	1	0.1 U	0.5	0.1	1.0 U	1.0	0.48	0.1 U	0.5	0.1
Dibenzofuran	1.3	1.1 U	1.1	0.52	0.5 U	1	0.5	5 U	10	5	0.5 U	1	0.5	1.0 U	1.0	0.48	0.5 U	0.9	0.5
1,2-Dichlorobenzene	440	1.1 U	1.1	0.40	0.5 U	1	0.5	5 U	10	5	0.5 U	1	0.5	1.0 U	1.0	0.36	0.5 U	0.9	0.5
1,3-Dichlorobenzene	---	1.1 U	1.1	0.39	0.5 U	1	0.5	5 U	10	5	0.5 U	1	0.5	1.0 U	1.0	0.36	0.5 U	0.9	0.5
1,4-Dichlorobenzene	1.7	1.1 U	1.1	0.43	0.5 U	1	0.5	5 U	10	5	0.5 U	1	0.5	1.0 U	1.0	0.40	0.5 U	0.9	0.5
3,3'-Dichlorobenzidine	---	5.4 U	5.4	1.6	2 U	5	2	20 U	50	20	2 U	5	2	5.0 U	5.0	1.5	2 U	5	2
2,4-Dichlorophenol	---	5.4 U	5.4	2.8	0.5 U	1	0.5	5 U	10	5	0.5 U	1	0.5	5.0 U	5.0	2.6	0.5 U	0.9	0.5
Diethylphthalate	4,236	1.1 U	1.1	0.63	2 U	5	2	20 U	50	20	2 U	5	2	1.0 U	1.0	0.58	2 U	5	2
2,4-Dimethylphenol	660	1.1 U	1.1	0.39	**1**	1	0.5	5 U	10	5	**1**	1	0.5	1.0 U	1.0	0.36	0.5 U	0.9	0.5
Dimethylphthalate	1,100,000	1.1 U	1.1	0.57	2 U	5	2	20 U	50	20	2 U	5	2	1.0 U	1.0	0.53	2 U	5	2
4,6-Dinitro-2-Methylphenol	---	11 U	11	3.4	5 U	14	5	50 U	150	50	5 U	15	5	10 U	10	3.1	5 U	14	5
2,4-Dinitrophenol	---	11 U	11	3.8	10 U	29	10	100 U	300	100	10 U	30	10	10 UJ	10	3.5	10 U	29	10
2,4-Dinitrotoluene	---	5.4 U	5.4	2.7	1 U	5	1	10 U	50	10	1 U	5	1	5.0 U	5.0	2.5	1 U	5	1
2,6-Dinitrotoluene	---	5.4 U	5.4	2.6	0.5 U	1	0.5	5 U	10	5	0.5 U	1	0.5	5.0 U	5.0	2.4	0.5 U	1	0.5
bis(2-Ethylhexyl)phthalate	1.2	1.1 U	1.1	2.0	2 U	5	2	20 U	50	20	2 U	5	2	1.0 U	1.0	1.9	2 U	5	2

TABLE L-1
GROUNDWATER ANALYTICAL RESULTS
BOEING ISAACSON-THOMPSON
REMEDIAL INVESTIGATION

Location:		IT-MW-24			IT-MW-24			IT-MW-24			IT-MW-24			IT-MW-25			IT-MW-25		
Laboratory Sample ID:	Preliminary	UA54D/UA54M/UA55D/UA55L/UB47D/UB47L			6571473/6571474/UL18E			6692737/6692738/6692739/UZ18G			6788001/6788002/6788003/VJ03E			UB08B/UB08G/UB09B/UB09G			6571469/6571470/UL18C		
Laboratory Data Package ID:	Cleanup	UA54/UA55/UB47			1293989/UL18			1316786/UZ18			1335480/VJ03			UB08/UB09			1293989/UL18		
Sample Date:	Levels	12/08/2011			03/07/2012			6/18/2012			9/11/2012			12/13/2011			03/07/2012		
		Result	Reporting Limit	Detection Limit	Result	Reporting Limit	Detection Limit	Result	Reporting Limit	Detection Limit	Result	Reporting Limit	Detection Limit	Result	Reporting Limit	Detection Limit	Result	Reporting Limit	Detection Limit
Fluoranthene	11	1.1 U	1.1	0.56	0.1 U	0.5	0.1	1 U	5	1	0.1 U	0.5	0.1	1.0 U	1.0	0.52	0.1 U	0.5	0.1
Fluorene	45	1.1 U	1.1	0.61	0.1 U	0.5	0.1	1 U	5	1	0.1 U	0.5	0.1	1.0 U	1.0	0.56	0.1 U	0.5	0.1
Hexachlorobenzene	---	1.1 U	1.1	0.51	0.1 U	0.5	0.1	1 U	5	1	0.1 U	0.5	0.1	1.0 U	1.0	0.47	0.1 U	0.5	0.1
Hexachlorobutadiene	---	1.1 U	1.1	0.33	0.5 U	1	0.5	5 U	10	5	0.5 U	1	0.5	1.0 U	1.0	0.31	0.5 U	0.9	0.5
Hexachlorocyclopentadiene	---	5.4 U	5.4	1.3	5 U	14	5	50 U	150	50	5 U	15	5	5.0 U	5.0	1.2	5 U	14	5
Hexachloroethane	---	1.1 U	1.1	0.38	1 U	5	1	10 U	50	10	1 U	5	1	1.0 U	1.0	0.35	1 U	5	1
Indeno(1,2,3-cd)pyrene	0.0018	1.1 U	1.1	0.53	0.1 U	0.5	0.1	1 U	5	1	0.1 U	0.5	0.1	1.0 U	1.0	0.48	0.1 U	0.5	0.1
Isophorone	---	1.1 U	1.1	0.52	0.5 U	1	0.5	5 U	10	5	**2**	1	0.5	1.0 U	1.0	0.48	0.5 U	0.9	0.5
1-Methylnaphthalene	2.3	1.1 U	1.1	0.52	0.1 U	0.5	0.1	1 U	5	1	**0.2** J1	0.5	0.1	1.0 U	1.0	0.48	0.1 U	0.5	0.1
2-Methylnaphthalene	64	1.1 U	1.1	0.52	0.1 U	0.5	0.1	1 U	5	1	**0.1** J1	0.5	0.1	1.0 U	1.0	0.48	0.1 U	0.5	0.1
2-Methylphenol	3100	1.1 U	1.1	0.58	**1**	1	0.5	5 U	10	5	**1**	1	0.5	1.0 U	1.0	0.53	0.5 U	0.9	0.5
4-Methylphenol	330	**25**	1.1	0.57	**13**	1	0.5	5 U	10	5	**11**	1	0.5	1.0 U	1.0	0.52	0.5 U	0.9	0.5
Naphthalene	26	1.1 U	1.1	0.57	**0.5** J1	0.5	0.1	1 U	5	1	**0.4** J1	0.5	0.1	1.0 U	1.0	0.52	0.1 U	0.5	0.1
2-Nitroaniline	---	5.4 U	5.4	2.9	0.5 U	1	0.5	5 U	10	5	0.5 U	1	0.5	5.0 U	5.0	2.6	0.5 U	0.9	0.5
3-Nitroaniline	---	5.4 U	5.4	2.5	0.5 U	1	0.5	5 U	10	5	0.5 U	1	0.5	5.0 U	5.0	2.3	0.5 U	0.9	0.5
4-Nitroaniline	---	5.4 U	5.4	2.4	0.5 U	1	0.5	5 U	10	5	0.5 U	1	0.5	5.0 U	5.0	2.2	0.5 U	0.9	0.5
Nitrobenzene	---	1.1 U	1.1	0.62	0.5 U	1	0.5	5 U	10	5	0.5 U	1	0.5	1.0 U	1.0	0.58	0.5 U	0.9	0.5
2-Nitrophenol	---	5.4 U	5.4	2.1	0.5 U	1	0.5	5 U	10	5	0.5 U	1	0.5	5.0 U	5.0	2.0	0.5 U	0.9	0.5
4-Nitrophenol	---	5.4 U	5.4	2.8	10 U	29	10	100 U	300	100	10 U	30	10	5.0 U	5.0	2.6	10 U	29	10
N-Nitroso-Di-N-Propylamine	---	1.1 U	1.1	0.61	0.5 U	1	0.5	5 U	10	5	0.5 U	1	0.5	1.0 U	1.0	0.56	0.5 U	0.9	0.5
N-Nitrosodiphenylamine	1.96	1.1 U	1.1	0.50	0.5 U	1	0.5	5 U	10	5	0.5 U	1	0.5	1.0 U	1.0	0.46	0.5 U	0.9	0.5
Di-n-Octyl phthalate	---	1.1 U	1.1	0.55	2 U	5	2	20 U	50	20	2 U	5	2	1.0 U	1.0	0.51	2 U	5	2
Pentachlorophenol	---	5.4 U	5.4	2.6	1 U	5	1	10 U	50	10	1 U	5	1	5.0 UJ	5.0	2.4	1 U	5	1
Phenanthrene	---	1.1 U	1.1	0.61	0.1 U	0.5	0.1	1 U	5	1	0.1 U	0.5	0.1	1.0 U	1.0	0.56	0.1 U	0.5	0.1
Phenol	41,000	**1400**	27	14	**290**	1	0.5	**87**	10	5	**190**	10	5	1.0 U	1.0	0.52	0.5 U	0.9	0.5
Pyrene	9.8	1.1 U	1.1	0.59	0.1 U	0.5	0.1	1 UJ	5	1	0.1 U	0.5	0.1	1.0 U	1.0	0.55	0.1 U	0.5	0.1
1,2,4-Trichlorobenzene	1.13	1.1 U	1.1	0.42	0.5 U	1	0.5	5 U	10	5	0.5 U	1	0.5	1.0 U	1.0	0.38	0.5 U	0.9	0.5
2,4,5-Trichlorophenol	---	5.4 U	5.4	2.4	0.5 U	1	0.5	5 U	10	5	0.5 U	1	0.5	5.0 U	5.0	2.2	0.5 U	0.9	0.5
2,4,6-Trichlorophenol	---	5.4 U	5.4	2.6	0.5 U	1	0.5	5 U	10	5	0.5 U	1	0.5	5.0 U	5.0	2.4	0.5 U	0.9	0.5
cPAHs (µg/L)																			
Method SW8270D-SIM																			
Benzo(a)anthracene	0.0018	0.010 U	0.010	0.0063	**0.066** J1	0.10	0.050	**0.20**	0.10	0.050	0.0048 UJ	0.0096	0.0048	0.010 U	0.010	0.0063	**0.0070** J1	0.0098	0.0049
Benzo(a)pyrene	0.00018	0.010 U	0.010	0.0048	0.050 U	0.10	0.050	0.050 U	0.10	0.050	0.0048 UJ	0.0096	0.0048	0.010 U	0.010	0.0048	0.0049 U	0.0098	0.0049
Benzo(b)fluoranthene	0.0018	NA	NA	NA	0.050 U	0.10	0.050	0.050 U	0.10	0.050	**0.015** J	0.0096	0.0048	NA	NA	NA	0.0049 U	0.0098	0.0049
Benzo(k)fluoranthene	0.0018	NA	NA	NA	0.050 U	0.10	0.050	0.050 U	0.10	0.050	0.0048 UJ	0.0096	0.0048	NA	NA	NA	0.0049 U	0.0098	0.0049
Total Benzofluoranthenes	0.0018	0.020 U	0.020	0.0099	NA	NA	NA	NA	NA	NA	NA	NA	NA	0.020 U	0.020	0.0099	NA	NA	NA
Chrysene	0.018	0.010 U	0.010	0.0046	**0.076** J1	0.10	0.050	0.050 U	0.10	0.050	**0.069** J	0.0096	0.0048	0.010 U	0.010	0.0046	0.0049 U	0.0098	0.0049
Dibenz(a,h)anthracene	0.0018	0.010 U	0.010	0.0048	0.040 U	0.10	0.040	0.040 U	0.10	0.040	0.0039 UJ	0.0096	0.0039	0.010 U	0.010	0.0048	0.0039 U	0.0098	0.0039
Indeno(1,2,3-cd)pyrene	0.0018	0.010 U	0.010	0.0046	0.040 U	0.10	0.040	0.040 U	0.10	0.040	0.0039 UJ	0.0096	0.0039	0.010 U	0.010	0.0046	0.0039 U	0.0098	0.0039
Pyrene	9.8	NA	NA	NA	0.10 U	0.50	0.10	0.10 U	0.50	0.10	**0.015** J, J1	0.048	0.0096	NA	NA	NA	0.0098 U	0.049	0.0098
cPAH TEQ	0.00018	ND	NA	NA	**0.00736** J	NA	NA	**0.02**	NA	NA	**0.002** J	NA	NA	ND	NA	NA	**0.0007** J	NA	NA
PCBs (µg/L)																			
Method SW8082																			
Aroclor 1016	0.000023	0.010 U	0.010	0.0025	0.0058 UJ	0.0097	0.0058	0.0059 UJ	0.0098	0.0059	0.0060 UJ	0.0099	0.0060	0.010 U	0.010	0.0025	0.0057 U	0.0096	0.0057
Aroclor 1221	---	0.010 U	0.010	0.0028	0.0058 UJ	0.0097	0.0058	0.0059 UJ	0.0098	0.0059	0.0060 UJ	0.0099	0.0060	0.010 U	0.010	0.0028	0.0057 U	0.0096	0.0057
Aroclor 1232	---	0.010 U	0.010	0.0028	0.0068 UJ	0.0097	0.0068	0.0069 UJ	0.0098	0.0069	0.0070 UJ	0.0099	0.0070	0.010 U	0.010	0.0028	0.0067 U	0.0096	0.0067
Aroclor 1242	0.000023	0.010 U	0.010	0.0028	0.0058 UJ	0.0097	0.0058	0.0059 UJ	0.0098	0.0059	0.0060 UJ	0.0099	0.0060	0.010 U	0.010	0.0028	0.0057 U	0.0096	0.0057
Aroclor 1248	0.000023	0.010 U	0.010	0.0028	0.0048 UJ	0.0097	0.0048	0.0048 UJ	0.0095	0.0048	0.0050 UJ	0.0099	0.0050	0.010 U	0.010	0.0028	0.0048 U	0.0096	0.0048
Aroclor 1254	0.0000055	0.010 U	0.010	0.0028	0.0048 UJ	0.0097	0.0048	0.0049 UJ	0.0098	0.0049	0.0050 UJ	0.0099	0.0050	0.010 U	0.010	0.0028	0.0048 U	0.0096	0.0048
Aroclor 1260	0.000023	0.010 U	0.010	0.0028	0.0048 UJ	0.0097	0.0048	0.0049 UJ	0.0098	0.0049	0.0050 UJ	0.0099	0.0050	0.010 U	0.010	0.0028	**0.017**	0.0096	0.0048
Total PCBs	0.000023	ND	NA	NA	ND	NA	NA	ND	NA	NA	ND	NA	NA	ND	NA	NA	**0.017**	NA	NA

TABLE L-1
GROUNDWATER ANALYTICAL RESULTS
BOEING ISAACSON-THOMPSON
REMEDIAL INVESTIGATION

Location:		IT-MW-24			IT-MW-24			IT-MW-24			IT-MW-24			IT-MW-25			IT-MW-25		
Laboratory Sample ID:	Preliminary	UA54D/UA54M/UA55D/UA55L/UB47D/UB47L			6571473/6571474/UL18E			6692737/6692738/6692739/UZ18G			6788001/6788002/6788003/VJ03E			UB08B/UB08G/UB09B/UB09G			6571469/6571470/UL18C		
Laboratory Data Package ID:	Cleanup	UA54/UA55/UB47			1293989/UL18			1316786/UZ18			1335480/VJ03			UB08/UB09			1293989/UL18		
Sample Date:	Levels	12/08/2011			03/07/2012			6/18/2012			9/11/2012			12/13/2011			03/07/2012		
		Result	Reporting Limit	Detection Limit	Result	Reporting Limit	Detection Limit	Result	Reporting Limit	Detection Limit	Result	Reporting Limit	Detection Limit	Result	Reporting Limit	Detection Limit	Result	Reporting Limit	Detection Limit
TOTAL PETROLEUM HYDROCARBONS (mg/L)																			
NWTPH-Dx																			
Diesel-Range Organics	0.5	0.10 UJ	0.10	0.022	0.070 U	0.25	0.070	**0.210**	0.098	0.029	**0.180**	0.098	0.029	0.10 U	0.10	0.022	0.067 U	0.24	0.067
Oil-Range Organics	0.5	0.20 UJ	0.20	0.044	1.0 U	3.0	1.0	**0.300**	0.250	0.069	**0.260**	0.240	0.069	0.20 U	0.20	0.044	0.95 U	2.9	0.95
NWTPH-G																			
Gasoline-Range Organics	1.0/0.8	0.25 U	0.25	0.06	0.05 U	0.25	0.05	0.25 U	1.30	0.25	0.25 U	1.30	0.25	0.25 U	0.25	0.06	0.05 U	0.25	0.05
TOTAL METALS (µg/L)																			
Method 200.8																			
Antimony	---	**19.4**	0.2	0.010	**55.9**	1.0	0.42	**18.1**	5.0	1.7	**9.0**	1.0	0.33	**0.5**	0.2	0.010	**12.0**	1.0	0.42
Arsenic	---	**212,000**	500	120	**227,000**	2000	950	**125,000**	400	40.0	**274,000**	1000	200	**3300**	5	1.2	**3680**	10.0	4.8
Barium	---	**215**	0.5	0.020	**200**	2.0	0.69	**87.5**	10.0	2.1	**109**	2.0	0.41	**25.2**	0.5	0.020	**23.9**	2.0	0.69
Beryllium	---	**2.2**	0.2	0.021	**1.8**	0.50	0.13	**0.93** J1	2.5	0.13	**1.1**	0.50	0.025	0.2 U	0.2	0.021	**0.25** J1	0.50	0.13
Cadmium	---	**2.0**	0.1	0.010	**0.28** J1	0.50	0.20	0.24 U	2.5	0.24	**0.14** J1	0.50	0.082	**0.1**	0.1	0.010	**0.51**	0.50	0.20
Chromium	---	**36**	1	0.11	**30.6**	2.0	0.60	**9.4** J1	10.0	2.5	**25.8**	2.0	0.50	**1.5**	0.5	0.045	**3.7**	2.0	0.60
Copper	---	**1230**	20	7.9	**288**	2.0	0.38	**45.6**	2.0	0.15	**481**	2.0	0.40	**19.3**	0.5	0.158	**1160**	10.0	1.9
Lead	---	**33.8**	0.1	0.046	**11.3**	1.0	0.080	**2.3** J1	5.0	0.17	**9.9**	1.0	0.034	**0.1**	0.1	0.046	**3.8**	1.0	0.080
Nickel	---	**309**	1	0.20	**180**	2.0	0.50	**219**	10.0	0.65	**225**	2.0	0.35	**7.4**	0.5	0.079	**8.2**	2.0	0.50
Selenium	---	**18**	1	0.32	**11.2**	2.0	0.27	**12.6**	10.0	0.90	**8.7**	2.0	0.50	**0.9**	0.5	0.127	**1.9** J1	2.0	0.27
Silver	---	**1.7**	0.2	0.008	0.098 U	0.50	0.098	0.50 U	2.5	0.50	0.10 U	0.50	0.10	0.2 U	0.2	0.008	0.098 U	0.50	0.098
Thallium	---	**0.3**	0.2	0.004	0.15 U	0.50	0.15	0.15 U	2.5	0.15	0.15 U	0.50	0.15	0.2 U	0.2	0.004	0.15 U	0.50	0.15
Zinc	---	**610**	10	1.2	**266**	15.0	4.0	**213**	75.0	5.5	**187**	15.0	1.1	**17**	4	0.50	**217**	15.0	4.0
Method SW7196A (mg/L)																			
Chromium VI	0.00058	0.010 U	0.010	0.00300	0.010 U	0.010	0.00300	0.010 U	0.010	0.00300	0.050 U	0.050	0.0150	0.010 U	0.010	0.00300	0.010 U	0.010	0.00300
Method SW7470A/EPA 1631E (ng/L)																			
Mercury	12	**1750**	40.0	5.20	8.00 U	25.0	8.00	3.20 U	10.00	3.20	3.20 U	10.0	3.20	20.0 U	20.0	2.60	**748**	10.0	3.20
DISSOLVED METALS (µg/L)																			
Methods 200.8/SW7196A																			
Antimony	150	**19.8**	0.2	0.010	**55.2**	1.0	0.42	**17.6**	1.0	0.33	**8.6**	1.0	0.33	**0.6**	0.2	0.010	**12.3**	1.0	0.42
Arsenic	8	**209,000**	500	120	**218,000**	1000	475	**130,000**	400	40.0	**285,000**	1000	200	**3290**	5	1.20	**3910**	20.0	9.5
Barium	770	**157**	0.5	0.020	**158**	2.0	0.69	**59.4**	2.0	0.41	**94.4**	2.0	0.41	**25.3**	0.5	0.020	**14.6**	2.0	0.69
Beryllium	12	**1.6**	0.2	0.021	**1.5**	0.50	0.13	**0.62**	0.50	0.025	**0.97**	0.50	0.025	0.2 U	0.2	0.021	**0.19** J1	0.50	0.13
Cadmium	0.25	**0.8**	0.1	0.010	0.20 U	0.50	0.20	**0.065** J1	0.50	0.048	**0.091** J1	0.50	0.082	0.1 U	0.1	0.010	0.20 U	0.50	0.20
Chromium	74	**34**	1	0.11	**27.7**	2.0	0.60	**7.7**	2.0	0.50	**18.5**	2.0	0.50	**1.3**	0.5	0.045	**3.1**	2.0	0.60
Copper	8	**84.7**	0.5	0.158	**79.4**	2.0	0.38	**27.8**	10.0	0.75	**58.0**	2.0	0.40	**3.0**	0.5	0.158	**506**	2.0	0.38
Lead	2.5	**2.9**	0.1	0.046	**5.5**	1.0	0.080	**1.6**	1.0	0.034	**3.9**	1.0	0.034	0.1 U	0.1	0.046	**1.4**	1.0	0.080
Nickel	8.2	**212**	0.5	0.079	**138**	2.0	0.50	**176**	2.0	0.13	**190**	2.0	0.35	**6.6**	0.5	0.079	**7.5**	2.0	0.50
Selenium	5	**13.4**	0.5	0.127	**10.2**	2.0	0.27	**10.4**	2.0	0.18	**9.7**	2.0	0.50	**0.8**	0.5	0.127	**2.1**	2.0	0.27
Silver	22	**0.8**	0.2	0.008	0.098 U	0.50	0.098	0.10 U	0.50	0.10	0.10 U	0.50	0.10	0.2 U	0.2	0.008	0.098 U	0.50	0.098
Thallium	0.47	0.2 U	0.2	0.004	0.15 U	0.50	0.15	0.029 U	0.50	0.029	0.15 U	0.50	0.15	0.2 U	0.2	0.004	0.15 U	0.50	0.15
Zinc	56	**50**	4	0.50	**48.6**	15.0	4.0	**33.4**	15.0	1.1	**58.4**	15.0	1.1	**15**	4	0.50	**64.0**	15.0	4.0
Method SW7470A/EPA 1631E (ng/L)																			
Mercury	12	**38.5**	20.0	2.60	8.00 U	25.0	8.00	3.20 U	10.00	3.20	3.20 U	10.0	3.20	20.0 U	20.0	2.60	**274**	10.0	3.20
CONVENTIONALS (mg/L)																			
Chloride (Method 300.0)	---	NA	NA	NA	NA	NA	NA	**44.4**	20.0	10.0	**45.2**	20.0	10.0	NA	NA	NA	NA	NA	NA
Nitrate (Method 300.0)	---	5.0 U	5.0	0.350	0.050 U	0.10	0.050	0.050 U	0.10	0.050	2.5 U	5.0	2.5	0.1 U	0.1	0.007	**0.43**	0.10	0.050
Sulfate (Method 300.0)	---	**649**	20.0	11.8	**515**	100	30.0	**466**	50.0	15.0	**544**	50.0	15.0	**77.1**	5.0	2.95	**156**	20.0	6.0
Total Dissolved Solids (Method 160.1)	---	**3400**	20.0	20.0	**3430**	240	77.6	**3900**	600	194	**4220**	600	194	**579**	10.0	10.0	**579**	60.0	19.4
FIELD PARAMETERS																			
Temperature (°C)	---	15.38	NA	NA	15.34	NA	NA	15.05	NA	NA	17.07	NA	NA	15.98	NA	NA	13.16	NA	NA
Conductivity (uS/cm)	---	4640	NA	NA	2321	NA	NA	5200	NA	NA	4745	NA	NA	1718	NA	NA	490	NA	NA
Dissolved Oxygen (mg/L)	---	0.68	NA	NA	0.23	NA	NA	0.25	NA	NA	0.95	NA	NA	0.91	NA	NA	0.63	NA	NA
pH (SU)	---	9.84	NA	NA	13.65	NA	NA	12.60	NA	NA	11.64	NA	NA	6.23	NA	NA	10.53	NA	NA
ORP (mV)	---	-218.8	NA	NA	-458.4	NA	NA	-468.2	NA	NA	-485	NA	NA	-19.0	NA	NA	-72.6	NA	NA
Turbidity (NTU)	---	15.10	NA	NA	16.27	NA	NA	12.37	NA	NA	47.3	NA	NA	2.73	NA	NA	27.65	NA	NA
Ferrous Iron (mg/L)	---	NA	NA	NA	0.0	NA	NA	0.0	NA	NA	0.0	NA	NA	NA	NA	NA	0.8	NA	NA

TABLE L-1
GROUNDWATER ANALYTICAL RESULTS
BOEING ISAACSON-THOMPSON
REMEDIAL INVESTIGATION

Location:		IT-MW-25			IT-MW-25			IT-PZ-1			IT-PZ-1			IT-PZ-1			IT-PZ-1		
Laboratory Sample ID:	Preliminary	6686963/6686964/6686965/UY34C			6788007/6788008/6788009/VJ03G			UB28B/UB28H/UB29B/UB29G			6571465/6571466/UL18A			6686957/6686958/6686959/UY34A			6788013/6788014/6788015/VJ03I		
Laboratory Data Package ID:	Cleanup	1315688/UY34			1335480/VJ03			UB28/UB29			1293989/UL18			1315688/UY34			1335480/VJ03		
Sample Date:	Levels	6/13/2012			9/11/2012			12/14/2011			03/07/2012			6/13/2012			9/11/2012		
		Result	Reporting Limit	Detection Limit	Result	Reporting Limit	Detection Limit	Result	Reporting Limit	Detection Limit	Result	Reporting Limit	Detection Limit	Result	Reporting Limit	Detection Limit	Result	Reporting Limit	Detection Limit
VOLATILES (µg/L)																			
Method SW8260C																			
Acetone	110,000	30 U	50	30	6.0 U	10	6.0	**2.5** J1	5.0	2.1	3.0 U	5.0	3.0	3.0 U	5.0	3.0	3.0 U	5.0	3.0
Acrolein	---	50 U	250	50	10 U	50	10	5.0 U	5.0	2.5	5.0 U	25	5.0	5.0 U	25	5.0	5.0 U	25	5.0
Acrylonitrile	0.057	10 U	50	10	2.0 U	10	2.0	1.0 U	1.0	0.60	1.0 U	5.0	1.0	1.0 U	5.0	1.0	1.0 U	5.0	1.0
Benzene	2	1.0 U	2.0	1.0	0.2 U	0.4	0.2	0.2 U	0.2	0.03	0.1 U	0.2	0.1	0.1 U	0.2	0.1	0.1 U	0.2	0.1
Bromobenzene	---	1.0 U	5.0	1.0	0.2 U	1.0	0.2	0.2 U	0.2	0.06	0.1 U	0.5	0.1	0.1 U	0.5	0.1	0.1 U	0.5	0.1
Bromochloromethane	---	1.0 U	5.0	1.0	0.2 U	1.0	0.2	0.2 U	0.2	0.06	0.1 U	0.5	0.1	0.1 U	0.5	0.1	0.1 U	0.5	0.1
Bromodichloromethane	17	1.0 U	5.0	1.0	0.2 U	1.0	0.2	0.2 U	0.2	0.05	0.1 U	0.5	0.1	0.1 U	0.5	0.1	0.1 U	0.5	0.1
Bromoform	---	1.0 U	5.0	1.0	0.2 U	1.0	0.2	0.2 UJ	0.2	0.06	0.1 U	0.5	0.1	0.1 U	0.5	0.1	0.1 U	0.5	0.1
Bromomethane	---	1.0 U	5.0	1.0	0.2 U	1.0	0.2	1.0 U	1.0	0.25	0.1 U	0.5	0.1	0.1 UJ	0.5	0.1	0.1 U	0.5	0.1
2-Butanone	73,000	10 U	50	10	2.0 U	10	2.0	5.0 U	5.0	0.81	1.0 U	5.0	1.0	1.0 U	5.0	1.0	1.0 U	5.0	1.0
n-Butylbenzene	780	1.0 U	5.0	1.0	0.2 U	1.0	0.2	0.2 U	0.2	0.02	0.1 U	0.5	0.1	0.1 U	0.5	0.1	0.1 U	0.5	0.1
sec-Butylbenzene	---	1.0 U	5.0	1.0	0.2 U	1.0	0.2	0.2 U	0.2	0.02	0.1 U	0.5	0.1	0.1 U	0.5	0.1	0.1 U	0.5	0.1
tert-Butylbenzene	---	1.0 U	5.0	1.0	0.2 U	1.0	0.2	0.2 U	0.2	0.03	0.1 U	0.5	0.1	0.1 U	0.5	0.1	0.1 U	0.5	0.1
Carbon Disulfide	3900	4.0 U	5.0	4.0	0.8 U	1.0	0.8	0.2 U	0.2	0.04	0.4 U	0.5	0.4	0.4 U	0.5	0.4	0.4 U	0.5	0.4
Carbon Tetrachloride	0.46	1.0 U	2.0	1.0	0.2 U	0.4	0.2	0.2 U	0.2	0.04	0.1 U	0.2	0.1	0.1 U	0.2	0.1	0.1 U	0.2	0.1
Chlorobenzene	270	1.0 U	5.0	1.0	0.2 U	1.0	0.2	0.2 U	0.2	0.02	0.1 U	0.5	0.1	0.1 U	0.5	0.1	0.1 U	0.5	0.1
Chloroethane	21,000	1.0 U	5.0	1.0	0.2 U	1.0	0.2	0.2 U	0.2	0.09	0.1 U	0.5	0.1	0.1 U	0.5	0.1	0.1 U	0.5	0.1
Chloroform	9.4	1.0 U	2.0	1.0	0.2 U	0.4	0.2	0.2 U	0.2	0.03	0.1 U	0.2	0.1	0.1 U	0.2	0.1	0.1 U	0.2	0.1
Chloromethane	10.3	2.0 U	5.0	2.0	0.4 U	1.0	0.4	0.5 U	0.5	0.10	0.2 U	0.5	0.2	0.2 U	0.5	0.2	0.2 U	0.5	0.2
2-Chlorotoluene	---	1.0 U	5.0	1.0	0.2 U	1.0	0.2	0.2 U	0.2	0.02	0.1 U	0.5	0.1	0.1 U	0.5	0.1	0.1 U	0.5	0.1
4-Chlorotoluene	2600	1.0 U	5.0	1.0	0.2 U	1.0	0.2	0.2 U	0.2	0.02	0.1 U	0.5	0.1	0.1 U	0.5	0.1	0.1 U	0.5	0.1
1,2-Dibromo-3-chloropropane	---	2.0 U	5.0	2.0	0.4 U	1.0	0.4	0.5 U	0.5	0.04	0.2 U	0.5	0.2	0.2 U	0.5	0.2	0.2 U	0.5	0.2
Dibromochloromethane	---	1.0 U	5.0	1.0	0.2 U	1.0	0.2	0.2 U	0.2	0.05	0.1 U	0.5	0.1	0.1 U	0.5	0.1	0.1 U	0.5	0.1
Dibromomethane	---	1.0 U	5.0	1.0	0.2 U	1.0	0.2	0.2 U	0.2	0.14	0.1 U	0.5	0.1	0.1 U	0.5	0.1	0.1 U	0.5	0.1
trans-1,4-Dichloro-2-butene	---	10 U	50	10	2.0 U	10	2.0	1.0 U	1.0	0.32	1.0 U	5.0	1.0	1.0 U	5.0	1.0	1.0 U	5.0	1.0
1,2-Dichlorobenzene	440	1.0 U	5.0	1.0	0.2 U	1.0	0.2	0.2 U	0.2	0.04	0.1 U	0.5	0.1	0.1 U	0.5	0.1	0.1 U	0.5	0.1
1,3-Dichlorobenzene	960	1.0 U	5.0	1.0	0.2 U	1.0	0.2	0.2 U	0.2	0.04	0.1 U	0.5	0.1	0.1 U	0.5	0.1	0.1 U	0.5	0.1
1,4-Dichlorobenzene	1.7	1.0 U	5.0	1.0	0.2 U	1.0	0.2	0.2 U	0.2	0.04	0.1 U	0.5	0.1	0.1 U	0.5	0.1	0.1 U	0.5	0.1
1,1-Dichloroethane	33	1.0 U	5.0	1.0	**0.4** J1	1.0	0.2	0.2 U	0.2	0.05	0.1 U	0.5	0.1	0.1 U	0.5	0.1	0.1 U	0.5	0.1
1,2-Dichloroethane	3.6	1.0 U	2.0	1.0	0.2 U	0.4	0.2	0.2 U	0.2	0.07	0.1 U	0.2	0.1	0.1 U	0.2	0.1	0.1 U	0.2	0.1
1,1-Dichloroethene	3.2	1.0 U	2.0	1.0	0.2 U	0.4	0.2	0.2 U	0.2	0.05	0.1 U	0.2	0.1	0.1 U	0.2	0.1	0.1 U	0.2	0.1
cis-1,2-Dichloroethene	130	**8.5**	2.0	1.0	**7.0**	0.4	0.2	0.2 U	0.2	0.04	0.1 U	0.2	0.1	0.1 U	0.2	0.1	0.1 U	0.2	0.1
trans-1,2-Dichloroethene	940	1.0 U	2.0	1.0	**0.5**	0.4	0.2	0.2 U	0.2	0.05	0.1 U	0.2	0.1	0.1 U	0.2	0.1	0.1 U	0.2	0.1
1,2-Dichloropropane	3.7	1.0 U	5.0	1.0	0.2 U	1.0	0.2	0.2 U	0.2	0.04	0.1 U	0.5	0.1	0.1 U	0.5	0.1	0.1 U	0.5	0.1
1,3-Dichloropropane	---	1.0 U	5.0	1.0	0.2 U	1.0	0.2	0.2 U	0.2	0.06	0.1 U	0.5	0.1	0.1 U	0.5	0.1	0.1 U	0.5	0.1
2,2-Dichloropropane	---	1.0 U	5.0	1.0	0.2 U	1.0	0.2	0.2 U	0.2	0.05	0.1 U	0.5	0.1	0.1 U	0.5	0.1	0.1 U	0.5	0.1
1,1-Dichloropropene	---	1.0 U	5.0	1.0	0.2 U	1.0	0.2	0.2 U	0.2	0.03	0.1 U	0.5	0.1	0.1 U	0.5	0.1	0.1 U	0.5	0.1
cis-1,3-Dichloropropene	---	1.0 U	2.0	1.0	0.2 U	0.4	0.2	0.2 U	0.2	0.06	0.1 U	0.2	0.1	0.1 U	0.2	0.1	0.1 U	0.2	0.1
trans-1,3-Dichloropropene	---	1.0 U	2.0	1.0	0.2 U	0.4	0.2	0.2 U	0.2	0.08	0.1 U	0.2	0.1	0.1 U	0.2	0.1	0.1 U	0.2	0.1
Ethylbenzene	1.7	1.0 U	5.0	1.0	0.2 U	1.0	0.2	0.2 U	0.2	0.04	0.1 U	0.5	0.1	0.1 U	0.5	0.1	0.1 U	0.5	0.1
Ethylene Dibromide	---	1.0 U	5.0	1.0	0.2 U	1.0	0.2	0.2 U	0.2	0.08	0.1 U	0.5	0.1	0.1 U	0.5	0.1	0.1 U	0.5	0.1
Hexachlorobutadiene	---	1.0 U	5.0	1.0	0.2 U	1.0	0.2	0.5 U	0.5	0.07	0.1 U	0.5	0.1	0.1 U	0.5	0.1	0.1 U	0.5	0.1
2-Hexanone	3200	10 U	50	10	2.0 U	10	2.0	5.0 U	5.0	0.90	1.0 U	5.0	1.0	1.0 U	5.0	1.0	1.0 U	5.0	1.0
Isopropylbenzene	270	1.0 U	5.0	1.0	0.2 U	1.0	0.2	0.2 U	0.2	0.02	0.1 U	0.5	0.1	0.1 U	0.5	0.1	0.1 U	0.5	0.1
4-Isopropyltoluene	---	1.0 U	5.0	1.0	0.2 U	1.0	0.2	0.2 U	0.2	0.03	0.1 U	0.5	0.1	0.1 U	0.5	0.1	0.1 U	0.5	0.1
Methyl Iodide	---	1.0 U	5.0	1.0	0.2 U	1.0	0.2	1.0 U	1.0	0.23	0.1 U	0.5	0.1	0.1 UJ	0.5	0.1	0.1 U	0.5	0.1
4-Methyl-2-Pentanone (MIBK)	19,000	10 U	50	10	2.0 U	10	2.0	5.0 U	5.0	0.97	1.0 U	5.0	1.0	1.0 U	5.0	1.0	1.0 U	5.0	1.0
Methylene Chloride	230	2.0 U	5.0	2.0	0.4 U	1.0	0.4	0.5 U	0.5	0.48	0.2 U	0.5	0.2	0.2 U	0.5	0.2	0.2 U	0.5	0.2
Naphthalene	26	1.0 U	5.0	1.0	0.2 U	1.0	0.2	0.5 U	0.5	0.12	0.1 U	0.5	0.1	0.1 U	0.5	0.1	0.1 U	0.5	0.1
n-Propylbenzene	530	1.0 U	5.0	1.0	0.2 U	1.0	0.2	0.2 U	0.2	0.02	0.1 U	0.5	0.1	0.1 U	0.5	0.1	0.1 U	0.5	0.1
Styrene	77,000	1.0 U	5.0	1.0	0.2 U	1.0	0.2	0.2 U	0.2	0.04	0.1 U	0.5	0.1	0.1 U	0.5	0.1	0.1 U	0.5	0.1
1,1,1,2-Tetrachloroethane	---	1.0 U	5.0	1.0	0.2 U	1.0	0.2	0.2 U	0.2	0.04	0.1 U	0.5	0.1	0.1 U	0.5	0.1	0.1 U	0.5	0.1
1,1,2,2-Tetrachloroethane	0.33	1.0 U	2.0	1.0	0.2 U	0.4	0.2	0.2 U	0.2	0.06	0.1 U	0.2	0.1	0.1 U	0.2	0.1	0.1 U	0.2	0.1
Tetrachloroethene	3.3	1.0 U	2.0	1.0	0.2 U	0.4	0.2	0.2 U	0.2	0.05	0.1 U	0.2	0.1	0.1 U	0.2	0.1	0.1 U	0.2	0.1
Toluene	1300	1.0 U	2.0	1.0	0.2 U	0.4	0.2	0.2 U	0.2	0.04	0.1 U	0.2	0.1	0.1 U	0.2	0.1	0.1 U	0.2	0.1
1,1,2-Trichloro-1,2,2-trifuoroethane	59,000	2.0 U	5.0	2.0	0.4 U	1.0	0.4	0.2 U	0.2	0.04	0.2 U	0.5	0.2	0.2 U	0.5	0.2	0.2 U	0.5	0.2
1,2,3-Trichlorobenzene	---	1.0 U	5.0	1.0	0.2 U	1.0	0.2	0.5 U	0.5	0.11	0.1 U	0.5	0.1	0.1 U	0.5	0.1	0.1 U	0.5	0.1

TABLE L-1
GROUNDWATER ANALYTICAL RESULTS
BOEING ISAACSON-THOMPSON
REMEDIAL INVESTIGATION

Location:		IT-MW-25			IT-MW-25			IT-PZ-1			IT-PZ-1			IT-PZ-1			IT-PZ-1		
Laboratory Sample ID:	Preliminary	6686963/6686964/6686965/UY34C			6788007/6788008/6788009/VJ03G			UB28B/UB28H/UB29B/UB29G			6571465/6571466/UL18A			6686957/6686958/6686959/UY34A			6788013/6788014/6788015/VJ03I		
Laboratory Data Package ID:	Cleanup	1315688/UY34			1335480/VJ03			UB28/UB29			1293989/UL18			1315688/UY34			1335480/VJ03		
Sample Date:	Levels	6/13/2012			9/11/2012			12/14/2011			03/07/2012			6/13/2012			9/11/2012		
		Result	Reporting Limit	Detection Limit	Result	Reporting Limit	Detection Limit	Result	Reporting Limit	Detection Limit	Result	Reporting Limit	Detection Limit	Result	Reporting Limit	Detection Limit	Result	Reporting Limit	Detection Limit
1,2,4-Trichlorobenzene	1.13	1.0 U	5.0	1.0	0.2 U	1.0	0.2	0.5 U	0.5	0.11	0.1 U	0.5	0.1	0.1 U	0.5	0.1	0.1 U	0.5	0.1
1,1,1-Trichloroethane	46,000	1.0 U	5.0	1.0	0.2 U	1.0	0.2	0.2 U	0.2	0.04	0.1 U	0.5	0.1	0.1 U	0.5	0.1	0.1 U	0.5	0.1
1,1,2-Trichloroethane	2.3	1.0 U	2.0	1.0	0.2 U	0.4	0.2	0.2 U	0.2	0.13	0.1 U	0.2	0.1	0.1 U	0.2	0.1	0.1 U	0.2	0.1
Trichloroethene	1.4	1.0 U	2.0	1.0	**0.3** J1	0.4	0.2	0.2 U	0.2	0.05	0.1 U	0.2	0.1	0.1 U	0.2	0.1	0.1 U	0.2	0.1
Trichlorofluoromethane	6900	1.0 U	5.0	1.0	0.2 U	1	0.2	0.2 U	0.2	0.04	0.1 U	0.5	0.1	0.1 U	0.5	0.1	0.1 U	0.5	0.1
1,2,3-Trichloropropane	---	3.0 U	10.0	3.0	0.6 U	2	0.6	0.5 U	0.5	0.13	0.3 U	1.0	0.3	0.3 U	1.0	0.3	0.3 U	1.0	0.3
1,2,4-Trimethylbenzene	303	1.0 U	5.0	1.0	**0.3** J1	1	0.2	0.2 U	0.2	0.02	0.1 U	0.5	0.1	0.1 U	0.5	0.1	0.1 U	0.5	0.1
1,3,5-Trimethylbenzene	303	1.0 U	5.0	1.0	0.2 U	1	0.2	0.2 U	0.2	0.02	0.1 U	0.5	0.1	0.1 U	0.5	0.1	0.1 U	0.5	0.1
Vinyl Acetate	---	2.0 U	5.0	2.0	0.4 U	1	0.4	1.0 U	1.0	0.07	0.2 U	0.5	0.2	0.2 U	0.5	0.2	0.2 U	0.5	0.2
Vinyl Chloride	0.53	**1.6** J1	2.0	1.0	**0.9** J	0.4	0.2	0.2 U	0.2	0.06	0.1 U	0.2	0.1	0.1 U	0.2	0.1	0.1 U	0.2	0.1
m,p-Xylene	1300	1.0 U	5.0	1.0	0.2 U	1	0.2	0.4 U	0.4	0.05	0.1 U	0.5	0.1	0.1 U	0.5	0.1	0.1 U	0.5	0.1
o-Xylene	1600	1.0 U	5.0	1.0	**0.4** J1	1	0.2	0.2 U	0.2	0.04	0.1 U	0.5	0.1	0.1 U	0.5	0.1	0.1 U	0.5	0.1
2-Chloroethylvinylether	---	NA	NA	NA	NA	NA	NA	1.0 U	1.0	0.25	NA	NA	NA	NA	NA	NA	NA	NA	NA
Bromoethane	---	NA	NA	NA	NA	NA	NA	0.2 U	0.2	0.04	NA	NA	NA	NA	NA	NA	NA	NA	NA
VOLATILES (µg/L)																			
Method SW8260C-SIM																			
Tetrachloroethene	3.3	**0.17**	0.020	0.010	**0.12**	0.040	0.020	0.020 U	0.020	0.0036	0.010 U	0.020	0.010	0.010 U	0.020	0.010	0.010 U	0.020	0.010
Vinyl Chloride	0.53	**2.0**	0.020	0.010	**1.1**	0.040	0.020	0.020 U	0.020	0.0022	0.010 U	0.020	0.010	0.010 U	0.020	0.010	0.010 U	0.020	0.010
Acrylonitrile	0.057	NA	NA	NA	NA	NA	NA	0.050 U	0.050	0.0158	NA	NA	NA	NA	NA	NA	NA	NA	NA
SEMIVOLATILES (µg/L)																			
Method SW8270D																			
Acenaphthene	120	0.1 U	0.5	0.1	0.1 U	0.5	0.1	1.0 U	1.0	0.55	0.1 U	0.5	0.1	0.1 U	0.5	0.1	0.1 U	0.5	0.1
Acenaphthylene	---	0.1 U	0.5	0.1	0.1 U	0.5	0.1	1.0 U	1.0	0.48	0.1 U	0.5	0.1	0.1 U	0.5	0.1	0.1 U	0.5	0.1
Anthracene	200	0.1 U	0.5	0.1	0.1 U	0.5	0.1	1.0 U	1.0	0.53	0.1 U	0.5	0.1	0.1 U	0.5	0.1	0.1 U	0.5	0.1
Benzo(a)anthracene	0.0018	0.1 U	0.5	0.1	0.1 U	0.5	0.1	1.0 U	1.0	0.52	0.1 U	0.5	0.1	0.1 U	0.5	0.1	0.1 U	0.5	0.1
Benzo(a)pyrene	0.00018	0.1 U	0.5	0.1	0.1 U	0.5	0.1	1.0 U	1.0	0.48	0.1 U	0.5	0.1	0.1 U	0.5	0.1	0.1 U	0.5	0.1
Benzo(b)fluoranthene	0.0018	0.1 U	0.5	0.1	0.1 U	0.5	0.1	NA	NA	NA	0.1 U	0.5	0.1	0.1 U	0.5	0.1	0.1 U	0.5	0.1
Benzo(g,h,i)perylene	---	0.1 U	0.5	0.1	0.1 U	0.5	0.1	1.0 U	1.0	0.55	0.1 U	0.5	0.1	0.1 U	0.5	0.1	0.1 U	0.5	0.1
Benzo(k)fluoranthene	0.0018	0.1 U	0.5	0.1	0.1 U	0.5	0.1	NA	NA	NA	0.1 U	0.5	0.1	0.1 U	0.5	0.1	0.1 U	0.5	0.1
Total Benzofluoranthenes	0.0018	NA	NA	NA	NA	NA	NA	1.0 U	1.0	0.48	NA	NA	NA	NA	NA	NA	NA	NA	NA
Benzoic Acid	2,240	6 U	16	6	6 U	15	6	10 UJ	10	5.1	6 UJ	14	6	6 U	14	6	6 U	16	6
Benzyl Alcohol	182	5 U	16	5	5 U	15	5	5.0 U	5.0	2.0	5 U	14	5	5 U	14	5	5 U	16	5
4-Bromophenyl-phenylether	---	0.5 U	1	0.5	0.5 U	1	0.5	1.0 U	1.0	0.42	0.5 U	1	0.5	0.5 U	1	0.5	0.5 U	1	0.5
Butylbenzylphthalate	0.41	2 U	5	2	2 U	5	2	1.0 U	1.0	0.56	2 U	5	2	2 U	5	2	2 U	5	2
Di-n-Butylphthalate	47	2 U	5	2	2 U	5	2	1.0 U	1.0	0.54	2 U	5	2	2 U	5	2	2 U	5	2
Carbazole	---	0.5 U	1	0.5	0.5 U	1	0.5	1.0 U	1.0	0.31	0.5 U	1	0.5	0.5 U	1	0.5	0.5 U	1	0.5
4-Chloro-3-methylphenol	3700	0.5 U	1	0.5	0.5 U	1	0.5	5.0 U	5.0	2.4	0.5 U	1	0.5	0.5 U	1	0.5	0.5 U	1	0.5
4-Chloroaniline	---	0.5 U	1	0.5	0.5 U	1	0.5	5.0 U	5.0	2.6	0.5 U	1	0.5	0.5 U	1	0.5	0.5 U	1	0.5
bis(2-Chloroethoxy) Methane	---	0.5 U	1	0.5	0.5 U	1	0.5	1.0 U	1.0	0.56	0.5 U	1	0.5	0.5 U	1	0.5	0.5 U	1	0.5
Bis-(2-Chloroethyl) Ether	---	0.5 U	1	0.5	0.5 U	1	0.5	1.0 U	1.0	0.58	0.5 U	1	0.5	0.5 U	1	0.5	0.5 U	1	0.5
2-Chloronaphthalene	---	0.4 U	1	0.4	0.4 U	1	0.4	1.0 U	1.0	0.48	0.4 U	1	0.4	0.4 U	1	0.4	0.4 U	1	0.4
2-Chlorophenol	---	0.5 U	1	0.5	0.5 U	1	0.5	1.0 U	1.0	0.53	0.5 U	1	0.5	0.5 U	1	0.5	0.5 U	1	0.5
4-Chlorophenyl-phenylether	---	0.5 U	1	0.5	0.5 U	1	0.5	1.0 U	1.0	0.45	0.5 U	1	0.5	0.5 U	1	0.5	0.5 U	1	0.5
2,2'-Oxybis(1-Chloropropane)	---	0.5 U	1	0.5	0.5 U	1	0.5	1.0 U	1.0	0.62	0.5 U	1	0.5	0.5 U	1	0.5	0.5 U	1	0.5
Chrysene	0.018	0.1 U	0.5	0.1	0.1 U	0.5	0.1	1.0 U	1.0	0.55	0.1 U	0.5	0.1	0.1 U	0.5	0.1	0.1 U	0.5	0.1
Dibenz(a,h)anthracene	0.0018	0.1 U	0.5	0.1	0.1 U	0.5	0.1	1.0 U	1.0	0.48	0.1 U	0.5	0.1	0.1 U	0.5	0.1	0.1 U	0.5	0.1
Dibenzofuran	1.3	0.5 U	1	0.5	0.5 U	1	0.5	1.0 U	1.0	0.48	0.5 U	1	0.5	0.5 U	1	0.5	0.5 U	1	0.5
1,2-Dichlorobenzene	440	0.5 U	1	0.5	0.5 U	1	0.5	1.0 U	1.0	0.36	0.5 U	1	0.5	0.5 U	1	0.5	0.5 U	1	0.5
1,3-Dichlorobenzene	---	0.5 U	1	0.5	0.5 U	1	0.5	1.0 U	1.0	0.36	0.5 U	1	0.5	0.5 U	1	0.5	0.5 U	1	0.5
1,4-Dichlorobenzene	1.7	0.5 U	1	0.5	0.5 U	1	0.5	1.0 U	1.0	0.40	0.5 U	1	0.5	0.5 U	1	0.5	0.5 U	1	0.5
3,3'-Dichlorobenzidine	---	2 U	5	2	2 U	5	2	5.0 U	5.0	1.5	2 U	5	2	2 U	5	2	2 U	5	2
2,4-Dichlorophenol	---	0.5 U	1	0.5	0.5 U	1	0.5	5.0 U	5.0	2.6	0.5 U	1	0.5	0.5 U	1	0.5	0.5 U	1	0.5
Diethylphthalate	4,236	2 U	5	2	2 U	5	2	1.0 U	1.0	0.58	2 U	5	2	2 U	5	2	2 U	5	2
2,4-Dimethylphenol	660	0.5 U	1	0.5	0.5 U	1	0.5	1.0 U	1.0	0.36	0.5 U	1	0.5	0.5 U	1	0.5	0.5 U	1	0.5
Dimethylphthalate	1,100,000	2 U	5	2	2 U	5	2	1.0 U	1.0	0.53	2 U	5	2	2 U	5	2	2 U	5	2
4,6-Dinitro-2-Methylphenol	---	5 U	16	5	5 U	15	5	10 U	10	3.1	5 U	14	5	5 U	14	5	5 U	16	5
2,4-Dinitrophenol	---	10 U	31	10	10 U	29	10	10 UJ	10	3.5	10 U	29	10	10 U	29	10	11 U	32	11
2,4-Dinitrotoluene	---	1 U	5	1	1 U	5	1	5.0 U	5.0	2.5	1 U	5	1	1 U	5	1	1 U	5	1
2,6-Dinitrotoluene	---	0.5 U	1	0.5	0.5 U	1	0.5	5.0 U	5.0	2.4	0.5 U	1	0.5	0.5 U	1	0.5	0.5 U	1	0.5
bis(2-Ethylhexyl)phthalate	1.2	2 U	5	2	2 U	5	2	1.0 U	1.0	1.9	2 U	5	2	2 U	5	2	2 U	5	2

TABLE L-1
GROUNDWATER ANALYTICAL RESULTS
BOEING ISAACSON-THOMPSON
REMEDIAL INVESTIGATION

Location:		IT-MW-25			IT-MW-25			IT-PZ-1			IT-PZ-1			IT-PZ-1			IT-PZ-1		
Laboratory Sample ID:	Preliminary	6686963/6686964/6686965/UY34C			6788007/6788008/6788009/VJ03G			UB28B/UB28H/UB29B/UB29G			6571465/6571466/UL18A			6686957/6686958/6686959/UY34A			6788013/6788014/6788015/VJ03I		
Laboratory Data Package ID:	Cleanup	1315688/UY34			1335480/VJ03			UB28/UB29			1293989/UL18			1315688/UY34			1335480/VJ03		
Sample Date:	Levels	6/13/2012			9/11/2012			12/14/2011			03/07/2012			6/13/2012			9/11/2012		
		Result	Reporting Limit	Detection Limit	Result	Reporting Limit	Detection Limit	Result	Reporting Limit	Detection Limit	Result	Reporting Limit	Detection Limit	Result	Reporting Limit	Detection Limit	Result	Reporting Limit	Detection Limit
Fluoranthene	11	0.1 U	0.5	0.1	0.1 U	0.5	0.1	1.0 U	1.0	0.52	0.1 U	0.5	0.1	0.1 U	0.5	0.1	0.1 U	0.5	0.1
Fluorene	45	0.1 U	0.5	0.1	0.1 U	0.5	0.1	1.0 U	1.0	0.56	0.1 U	0.5	0.1	0.1 U	0.5	0.1	0.1 U	0.5	0.1
Hexachlorobenzene	---	0.1 U	0.5	0.1	0.1 U	0.5	0.1	1.0 U	1.0	0.47	0.1 U	0.5	0.1	0.1 U	0.5	0.1	0.1 U	0.5	0.1
Hexachlorobutadiene	---	0.5 U	1	0.5	0.5 U	1	0.5	1.0 U	1.0	0.31	0.5 U	1	0.5	0.5 U	1	0.5	0.5 U	1	0.5
Hexachlorocyclopentadiene	---	5 U	16	5	5 U	15	5	5.0 U	5.0	1.2	5 U	14	5	5 U	14	5	5 U	16	5
Hexachloroethane	---	1 U	5	1	1 U	5	1	1.0 U	1.0	0.35	1 U	5	1	1 U	5	1	1 U	5	1
Indeno(1,2,3-cd)pyrene	0.0018	0.1 U	0.5	0.1	0.1 U	0.5	0.1	1.0 U	1.0	0.48	0.1 U	0.5	0.1	0.1 U	0.5	0.1	0.1 U	0.5	0.1
Isophorone	---	0.5 U	1	0.5	0.5 U	1	0.5	1.0 U	1.0	0.48	0.5 U	1	0.5	0.5 U	1	0.5	0.5 U	1	0.5
1-Methylnaphthalene	2.3	0.1 U	0.5	0.1	0.1 U	0.5	0.1	1.0 U	1.0	0.48	0.1 U	0.5	0.1	0.1 U	0.5	0.1	0.1 U	0.5	0.1
2-Methylnaphthalene	64	0.1 U	0.5	0.1	0.1 U	0.5	0.1	1.0 U	1.0	0.48	0.1 U	0.5	0.1	0.1 U	0.5	0.1	0.1 U	0.5	0.1
2-Methylphenol	3100	0.5 U	1	0.5	0.5 U	1	0.5	1.0 U	1.0	0.53	0.5 U	1	0.5	0.5 U	1	0.5	0.5 U	1	0.5
4-Methylphenol	330	0.5 U	1	0.5	0.5 U	1	0.5	1.0 U	1.0	0.52	0.5 U	1	0.5	0.5 U	1	0.5	0.5 U	1	0.5
Naphthalene	26	**0.1** J1	0.5	0.1	0.1 U	0.5	0.1	1.0 U	1.0	0.52	0.1 U	0.5	0.1	0.1 U	0.5	0.1	**0.1** J1	0.5	0.1
2-Nitroaniline	---	0.5 U	1	0.5	0.5 U	1	0.5	5.0 U	5.0	2.6	0.5 U	1	0.5	0.5 U	1	0.5	0.5 U	1	0.5
3-Nitroaniline	---	0.5 U	1	0.5	0.5 U	1	0.5	5.0 U	5.0	2.3	0.5 U	1	0.5	0.5 U	1	0.5	0.5 U	1	0.5
4-Nitroaniline	---	0.5 U	1	0.5	0.5 U	1	0.5	5.0 U	5.0	2.2	0.5 U	1	0.5	0.5 U	1	0.5	0.5 U	1	0.5
Nitrobenzene	---	0.5 U	1	0.5	0.5 U	1	0.5	1.0 U	1.0	0.58	0.5 U	1	0.5	0.5 U	1	0.5	0.5 U	1	0.5
2-Nitrophenol	---	0.5 U	1	0.5	0.5 U	1	0.5	5.0 U	5.0	2.0	0.5 U	1	0.5	0.5 U	1	0.5	0.5 U	1	0.5
4-Nitrophenol	---	10 U	31	10	10 U	29	10	5.0 U	5.0	2.6	10 U	29	10	10 U	29	10	11 U	32	11
N-Nitroso-Di-N-Propylamine	---	0.5 U	1	0.5	0.5 U	1	0.5	1.0 U	1.0	0.56	0.5 U	1	0.5	0.5 U	1	0.5	0.5 U	1	0.5
N-Nitrosodiphenylamine	1.96	0.5 U	1	0.5	0.5 U	1	0.5	1.0 U	1.0	0.46	0.5 U	1	0.5	0.5 U	1	0.5	0.5 U	1	0.5
Di-n-Octyl phthalate	---	2 U	5	2	2 U	5	2	1.0 U	1.0	0.51	2 U	5	2	2 U	5	2	2 U	5	2
Pentachlorophenol	---	1 U	5	1	1 U	5	1	5.0 U	5.0	2.4	1 U	5	1	1 U	5	1	1 U	5	1
Phenanthrene	---	0.1 U	0.5	0.1	0.1 U	0.5	0.1	1.0 U	1.0	0.56	0.1 U	0.5	0.1	0.1 U	0.5	0.1	0.1 U	0.5	0.1
Phenol	41,000	0.5 U	1	0.5	0.5 U	1	0.5	1.0 U	1.0	0.52	0.5 U	1	0.5	0.5 U	1	0.5	0.5 U	1	0.5
Pyrene	9.8	0.1 U	0.5	0.1	0.1 U	0.5	0.1	1.0 U	1.0	0.55	0.1 U	0.5	0.1	0.1 U	0.5	0.1	0.1 U	0.5	0.1
1,2,4-Trichlorobenzene	1.13	0.5 U	1	0.5	0.5 U	1	0.5	1.0 U	1.0	0.38	0.5 U	1	0.5	0.5 U	1	0.5	0.5 U	1	0.5
2,4,5-Trichlorophenol	---	0.5 U	1	0.5	0.5 U	1	0.5	5.0 U	5.0	2.2	0.5 U	1	0.5	0.5 U	1	0.5	0.5 U	1	0.5
2,4,6-Trichlorophenol	---	0.5 U	1	0.5	0.5 U	1	0.5	5.0 U	5.0	2.4	0.5 U	1	0.5	0.5 U	1	0.5	0.5 U	1	0.5
cPAHs (µg/L)																			
Method SW8270D-SIM																			
Benzo(a)anthracene	0.0018	**0.0080** J1	0.010	0.0051	**0.012**	0.0097	0.0049	0.010 U	0.010	0.0063	0.0048 U	0.0097	0.0048	0.0048 U	0.0095	0.0048	0.0053 U	0.011	0.0053
Benzo(a)pyrene	0.00018	0.0051 U	0.010	0.0051	0.0049 U	0.0097	0.0049	0.010 U	0.010	0.0048	0.0048 U	0.0097	0.0048	0.0048 U	0.0095	0.0048	0.0053 U	0.011	0.0053
Benzo(b)fluoranthene	0.0018	0.0051 U	0.010	0.0051	0.0049 U	0.0097	0.0049	NA	NA	NA	0.0048 U	0.0097	0.0048	0.0048 U	0.0095	0.0048	0.0053 U	0.011	0.0053
Benzo(k)fluoranthene	0.0018	0.0051 U	0.010	0.0051	0.0049 U	0.0097	0.0049	NA	NA	NA	0.0048 U	0.0097	0.0048	0.0048 U	0.0095	0.0048	0.0053 U	0.011	0.0053
Total Benzofluoranthenes	0.0018	NA	NA	NA	NA	NA	NA	0.020 U	0.020	0.0099	NA	NA	NA	NA	NA	NA	NA	NA	NA
Chrysene	0.018	0.0051 U	0.010	0.0051	0.0049 U	0.0097	0.0049	0.010 U	0.010	0.0046	0.0048 U	0.0097	0.0048	0.0048 U	0.0095	0.0048	0.0053 U	0.011	0.0053
Dibenz(a,h)anthracene	0.0018	0.0041 U	0.010	0.0041	**0.0040** J1	0.0097	0.0039	0.010 U	0.010	0.0048	0.0039 U	0.0097	0.0039	0.0038 U	0.0095	0.0038	0.0043 U	0.011	0.0043
Indeno(1,2,3-cd)pyrene	0.0018	0.0041 U	0.010	0.0041	0.0039 U	0.0097	0.0039	0.010 U	0.010	0.0046	0.0039 U	0.0097	0.0039	0.0038 U	0.0095	0.0038	0.0043 U	0.011	0.0043
Pyrene	9.8	0.010 U	0.051	0.010	0.0097 U	0.049	0.0097	NA	NA	NA	0.0097 U	0.048	0.0097	0.0095 U	0.047	0.0095	0.011 U	0.053	0.011
cPAH TEQ	0.00018	**0.0008** J	NA	NA	**0.0016** J	NA	NA	ND	NA	NA	ND	NA	NA	ND	NA	NA	ND	NA	NA
PCBs (µg/L)																			
Method SW8082																			
Aroclor 1016	0.000023	0.0060 U	0.010	0.0060	0.0059 U	0.0099	0.0059	0.010 U	0.010	0.0025	0.0057 U	0.0095	0.0057	0.0057 U	0.0096	0.0057	0.0059 U	0.0098	0.0059
Aroclor 1221	---	0.0060 U	0.010	0.0060	0.0059 U	0.0099	0.0059	0.010 U	0.010	0.0028	0.0057 U	0.0095	0.0057	0.0057 U	0.0096	0.0057	0.0059 U	0.0098	0.0059
Aroclor 1232	---	0.0070 U	0.010	0.0070	0.0069 U	0.0099	0.0069	0.010 U	0.010	0.0028	0.0067 U	0.0095	0.0067	0.0067 U	0.0096	0.0067	0.0069 U	0.0098	0.0069
Aroclor 1242	0.000023	0.0060 U	0.010	0.0060	0.0059 U	0.0099	0.0059	0.010 U	0.010	0.0028	0.0057 U	0.0095	0.0057	0.0057 U	0.0096	0.0057	0.0059 U	0.0098	0.0059
Aroclor 1248	0.000023	0.0050 U	0.010	0.0050	0.0050 U	0.0099	0.0050	0.010 U	0.010	0.0028	**0.0086** J1	0.0095	0.0048	0.0048 U	0.0096	0.0048	0.0049 U	0.0098	0.0049
Aroclor 1254	0.0000055	0.0050 U	0.010	0.0050	0.0050 U	0.0099	0.0050	0.010 U	0.010	0.0028	0.0048 U	0.0095	0.0048	0.0048 U	0.0096	0.0048	0.0049 U	0.0098	0.0049
Aroclor 1260	0.000023	**0.024**	0.010	0.0050	**0.011**	0.0099	0.0050	0.010 U	0.010	0.0028	0.0048 U	0.0095	0.0048	0.0048 U	0.0096	0.0048	0.0049 U	0.0098	0.0049
Total PCBs	0.000023	**0.024**	NA	NA	**0.011**	NA	NA	ND	NA	NA	**0.0086** J	NA	NA	ND	NA	NA	ND	NA	NA

TABLE L-1
GROUNDWATER ANALYTICAL RESULTS
BOEING ISAACSON-THOMPSON
REMEDIAL INVESTIGATION

Location:		IT-MW-25			IT-MW-25			IT-PZ-1			IT-PZ-1			IT-PZ-1			IT-PZ-1		
Laboratory Sample ID:	Preliminary	6686963/6686964/6686965/UY34C			6788007/6788008/6788009/VJ03G			UB28B/UB28H/UB29B/UB29G			6571465/6571466/UL18A			6686957/6686958/6686959/UY34A			6788013/6788014/6788015/VJ03I		
Laboratory Data Package ID:	Cleanup	1315688/UY34			1335480/VJ03			UB28/UB29			1293989/UL18			1315688/UY34			1335480/VJ03		
Sample Date:	Levels	6/13/2012			9/11/2012			12/14/2011			03/07/2012			6/13/2012			9/11/2012		
		Result	Reporting Limit	Detection Limit	Result	Reporting Limit	Detection Limit	Result	Reporting Limit	Detection Limit	Result	Reporting Limit	Detection Limit	Result	Reporting Limit	Detection Limit	Result	Reporting Limit	Detection Limit
TOTAL PETROLEUM HYDROCARBONS (mg/L)																			
NWTPH-Dx																			
Diesel-Range Organics	0.5	0.028 U	0.095	0.028	0.031 U	0.100	0.031	0.10 U	0.10	0.022	0.068 U	0.24	0.068	0.029 U	0.097	0.029	0.029 U	0.097	0.029
Oil-Range Organics	0.5	0.066 U	0.240	0.066	0.073 U	0.260	0.073	0.20 U	0.20	0.044	0.97 U	2.9	0.97	0.068 U	0.240	0.068	0.068 U	0.240	0.068
NWTPH-G																			
Gasoline-Range Organics	1.0/0.8	0.05 U	0.25	0.05	0.05 U	0.25	0.05	0.25 U	0.25	0.06	0.05 U	0.25	0.05	0.05 U	0.25	0.05	0.05 U	0.25	0.05
TOTAL METALS (µg/L)																			
Method 200.8																			
Antimony	---	**0.80** J1	1.0	0.42	**0.61** J1	1.0	0.33	0.2 U	0.2	0.010	0.42 U	1.0	0.42	0.42 U	1.0	0.42	0.33 U	1.0	0.33
Arsenic	---	**11,400**	40.0	19.0	**38,700**	200	40.0	**6.7**	0.2	0.048	**7.5**	2.0	0.95	**6.6**	2.0	0.95	**5.2**	2.0	0.40
Barium	---	**22.1**	2.0	0.69	**37.9**	2.0	0.41	**9.4**	0.5	0.020	**11.2**	2.0	0.69	**14.3**	2.0	0.69	**10.2**	2.0	0.41
Beryllium	---	**0.27** J1	0.50	0.13	**0.31** J1	0.50	0.025	0.2 U	0.2	0.021	0.13 U	0.50	0.13	0.13 U	0.50	0.13	0.025 U	0.50	0.025
Cadmium	---	**0.40** J1	0.50	0.20	**0.79**	0.50	0.082	**0.4**	0.1	0.010	**0.61**	0.50	0.20	**0.48** J1	0.50	0.20	**0.27** J1	0.50	0.082
Chromium	---	**18.1**	2.0	0.60	**13.4**	2.0	0.50	0.5 U	0.5	0.045	0.60 U	2.0	0.60	0.60 U	2.0	0.60	0.50 U	2.0	0.50
Copper	---	**327**	2.0	0.38	**449**	2.0	0.40	**21.9**	0.5	0.158	**23.5**	2.0	0.38	**44.3**	2.0	0.38	**26.2**	2.0	0.40
Lead	---	**2.9**	1.0	0.080	**9.2**	1.0	0.034	0.1 U	0.1	0.046	0.080 U	1.0	0.080	**0.080** J1	1.0	0.080	0.034 U	1.0	0.034
Nickel	---	**7.7**	2.0	0.50	**11.3**	2.0	0.35	**6.0**	0.5	0.079	**8.9**	2.0	0.50	**9.6**	2.0	0.50	**7.6**	2.0	0.35
Selenium	---	**0.56** J1	2.0	0.27	**0.69** J, J1	2.0	0.50	0.5 U	0.5	0.127	0.27 U	2.0	0.27	0.27 U	2.0	0.27	0.50 UJ	2.0	0.50
Silver	---	0.098 U	0.50	0.098	0.10 U	0.50	0.10	0.2 U	0.2	0.008	0.098 U	0.50	0.098	0.098 U	0.50	0.098	0.10 U	0.50	0.10
Thallium	---	0.15 U	0.50	0.15	**0.26** J1	0.50	0.15	0.2 U	0.2	0.004	0.15 U	0.50	0.15	0.15 U	0.50	0.15	0.15 U	0.50	0.15
Zinc	---	**90.6**	15.0	4.0	**199**	15.0	1.1	**262**	4	0.50	**490**	15.0	4.0	**264**	15.0	4.0	**185**	15.0	1.1
Method SW7196A (mg/L)																			
Chromium VI	0.00058	0.010 U	0.010	0.00300	0.010 U	0.010	0.00300	0.010 U	0.010	0.00300	0.010 U	0.010	0.00300	0.010 U	0.010	0.00300	0.010 U	0.010	0.00300
Method SW7470A/EPA 1631E (ng/L)																			
Mercury	12	**90.4**	10.0	3.20	3.20 U	10.0	3.20	20.0 U	20.0	2.60	**1.07**	5.00	1.60	**2.89**	0.500	0.160	**1.90**	0.500	0.160
DISSOLVED METALS (µg/L)																			
Methods 200.8/SW7196A																			
Antimony	150	**0.77** J1	1.0	0.42	0.33 U	1.0	0.33	0.2 U	0.2	0.010	0.42 U	1.0	0.42	0.42 U	1.0	0.42	0.33 U	1.0	0.33
Arsenic	8	**13,100**	40.0	19.0	**34,900**	200	40.0	**5.3**	0.2	0.048	**6.4**	2.0	0.95	**4.8**	2.0	0.95	**4.7**	2.0	0.40
Barium	770	**19.6**	2.0	0.69	**17.6**	2.0	0.41	**9.0**	0.5	0.020	**11.2**	2.0	0.69	**14.6**	2.0	0.69	**9.8**	2.0	0.41
Beryllium	12	**0.29** J1	0.50	0.13	**0.21** J1	0.50	0.025	0.2 U	0.2	0.021	0.13 U	0.50	0.13	0.13 U	0.50	0.13	0.025 U	0.50	0.025
Cadmium	0.25	0.20 U	0.50	0.20	0.082 U	0.50	0.082	**0.3**	0.1	0.010	**0.57**	0.50	0.20	**0.56**	0.50	0.20	**0.38** J1	0.50	0.082
Chromium	74	**21.0**	2.0	0.60	**14.2**	2.0	0.50	0.5 U	0.5	0.045	0.60 U	2.0	0.60	0.60 U	2.0	0.60	0.50 U	2.0	0.50
Copper	8	**91.1**	2.0	0.38	**12.3**	2.0	0.40	**17.3**	0.5	0.158	**21.2**	2.0	0.38	**41.3**	2.0	0.38	**25.0**	2.0	0.40
Lead	2.5	**0.76** J1	1.0	0.080	**0.26** J1	1.0	0.034	0.1 U	0.1	0.046	0.080 U	1.0	0.080	**0.14** J1	1.0	0.080	0.034 U	1.0	0.034
Nickel	8.2	**8.2**	2.0	0.50	**9.9**	2.0	0.35	**6.5**	0.5	0.079	**8.8**	2.0	0.50	**9.3**	2.0	0.50	**7.2**	2.0	0.35
Selenium	5	**0.89** J1	2.0	0.27	**0.66** J, J1	2.0	0.50	0.5 U	0.5	0.127	0.27 U	2.0	0.27	0.27 U	2.0	0.27	0.50 UJ	2.0	0.50
Silver	22	0.098 U	0.50	0.098	0.10 U	0.50	0.10	0.2 U	0.2	0.008	0.098 U	0.50	0.098	0.098 U	0.50	0.098	0.10 U	0.50	0.10
Thallium	0.47	0.15 U	0.50	0.15	0.15 U	0.50	0.15	0.2 U	0.2	0.004	0.15 U	0.50	0.15	0.15 U	0.50	0.15	0.15 U	0.50	0.15
Zinc	56	**62.8**	15.0	4.0	**40.4**	15.0	1.1	**244**	4	0.50	**477**	15.0	4.0	**258**	15.0	4.0	**181**	15.0	1.1
Method SW7470A/EPA 1631E (ng/L)																			
Mercury	12	**19.3**	10.0	3.20	3.20 U	10.0	3.20	20.0 U	20.0	2.60	**1.15**	5.00	1.60	**2.41**	0.500	0.160	**2.27**	0.500	0.160
CONVENTIONALS (mg/L)																			
Chloride (Method 300.0)	---	**10.5**	2.0	1.0	**15.1**	2.0	1.0	NA	NA	NA	NA	NA	NA	**3.5** J	0.40	0.20	**3.1**	0.40	0.20
Nitrate (Method 300.0)	---	0.050 UJ	0.10	0.050	0.25 U	0.50	0.25	**1.2**	0.1	0.007	**6.4** J	0.50	0.25	0.050 UJ	0.10	0.050	0.050 U	0.10	0.050
Sulfate (Method 300.0)	---	**120**	10.0	3.0	**97.9**	10.0	3.0	**19.5**	0.5	0.295	**28.1**	5.0	1.5	**42.6** J	5.0	1.5	**40.0**	5.0	1.5
Total Dissolved Solids (Method 160.1)	---	**667**	60.0	19.4	**673**	60.0	19.4	**151**	5.0	5.00	**214**	30.0	9.7	**251**	30.0	9.7	**204**	30.0	9.7
FIELD PARAMETERS																			
Temperature (°C)	---	15.17	NA	NA	17.08	NA	NA	14.65	NA	NA	13.83	NA	NA	14.68	NA	NA	15.31	NA	NA
Conductivity (uS/cm)	---	479	NA	NA	613	NA	NA	555	NA	NA	179	NA	NA	278	NA	NA	260	NA	NA
Dissolved Oxygen (mg/L)	---	0.50	NA	NA	0.34	NA	NA	0.94	NA	NA	1.13	NA	NA	0.47	NA	NA	0.48	NA	NA
pH (SU)	---	7.98	NA	NA	7.10	NA	NA	6.11	NA	NA	6.83	NA	NA	6.09	NA	NA	6.39	NA	NA
ORP (mV)	---	-142.7	NA	NA	-131.1	NA	NA	-170.2	NA	NA	127.9	NA	NA	64.1	NA	NA	23.0	NA	NA
Turbidity (NTU)	---	12.11	NA	NA	5.37	NA	NA	4.47	NA	NA	20.40	NA	NA	8.50	NA	NA	11.7	NA	NA
Ferrous Iron (mg/L)	---	3.4	NA	NA	2.4	NA	NA	NA	NA	NA	0.0	NA	NA	1.4	NA	NA	1.8	NA	NA

TABLE L-1
GROUNDWATER ANALYTICAL RESULTS
BOEING ISAACSON-THOMPSON
REMEDIAL INVESTIGATION

Location:		IT-PZ-2			IT-PZ-2			IT-PZ-2			IT-PZ-2			IT-PZ-3			IT-PZ-3		
Laboratory Sample ID:	Preliminary	UB28D/UB28J/UB29D/UB29I			6572515/6572516/UL36C			6693944/6693945/6693946/UZ37A			6790512/6790513/6790514/VJ63E			UB28E/UB28K/UB29E/UB29J/UD90B			6568992/6568993/UK92C		
Laboratory Data Package ID:	Cleanup	UB28/UB29			1294218/UL36			1317022/UZ37			1335985/VJ63			UB28/UB29/UD90			1293530/UK92		
Sample Date:	Levels	12/14/2011			03/08/2012			6/19/2012			9/14/2012			12/14/2011			03/06/2012		
		Result	Reporting Limit	Detection Limit	Result	Reporting Limit	Detection Limit	Result	Reporting Limit	Detection Limit	Result	Reporting Limit	Detection Limit	Result	Reporting Limit	Detection Limit	Result	Reporting Limit	Detection Limit
VOLATILES (µg/L)																			
Method SW8260C																			
Acetone	110,000	5.0 U	5.0	2.1	3.0 U	5.0	3.0	3.0 U	5.0	3.0	3.0 U	5.0	3.0	5.0 U	5.0	2.1	3.0 U	5.0	3.0
Acrolein	---	5.0 U	5.0	2.5	5.0 U	25	5.0	5.0 U	25	5.0	5.0 U	25	5.0	5.0 U	5.0	2.5	5.0 U	25	5.0
Acrylonitrile	0.057	1.0 U	1.0	0.60	1.0 U	5.0	1.0	1.0 U	5.0	1.0	1.0 U	5.0	1.0	1.0 U	1.0	0.60	1.0 U	5.0	1.0
Benzene	2	0.2 U	0.2	0.03	0.1 U	0.2	0.1	0.1 U	0.2	0.1	0.1 U	0.2	0.1	0.2 U	0.2	0.03	0.1 U	0.2	0.1
Bromobenzene	---	0.2 U	0.2	0.06	0.1 U	0.5	0.1	0.1 U	0.5	0.1	0.1 U	0.5	0.1	0.2 U	0.2	0.06	0.1 U	0.5	0.1
Bromochloromethane	---	0.2 U	0.2	0.06	0.1 U	0.5	0.1	0.1 U	0.5	0.1	0.1 U	0.5	0.1	0.2 U	0.2	0.06	0.1 U	0.5	0.1
Bromodichloromethane	17	0.2 U	0.2	0.05	0.1 U	0.5	0.1	0.1 U	0.5	0.1	0.1 U	0.5	0.1	0.2 U	0.2	0.05	0.1 U	0.5	0.1
Bromoform	---	0.2 UJ	0.2	0.06	0.1 U	0.5	0.1	0.1 UJ	0.5	0.1	0.1 U	0.5	0.1	0.2 UJ	0.2	0.06	0.1 U	0.5	0.1
Bromomethane	---	1.0 U	1.0	0.25	0.1 U	0.5	0.1	0.1 U	0.5	0.1	0.1 U	0.5	0.1	1.0 U	1.0	0.25	0.1 U	0.5	0.1
2-Butanone	73,000	5.0 U	5.0	0.81	1.0 U	5.0	1.0	1.0 U	5.0	1.0	1.0 U	5.0	1.0	5.0 U	5.0	0.81	1.0 U	5.0	1.0
n-Butylbenzene	780	0.2 U	0.2	0.02	0.1 U	0.5	0.1	0.1 U	0.5	0.1	0.1 U	0.5	0.1	0.2 U	0.2	0.02	0.1 U	0.5	0.1
sec-Butylbenzene	---	0.2 U	0.2	0.02	0.1 U	0.5	0.1	0.1 U	0.5	0.1	0.1 U	0.5	0.1	0.2 U	0.2	0.02	0.1 U	0.5	0.1
tert-Butylbenzene	---	0.2 U	0.2	0.03	0.1 U	0.5	0.1	0.1 U	0.5	0.1	0.1 U	0.5	0.1	0.2 U	0.2	0.03	0.1 U	0.5	0.1
Carbon Disulfide	3900	0.2 U	0.2	0.04	0.4 U	0.5	0.4	0.4 U	0.5	0.4	0.4 U	0.5	0.4	0.2 U	0.2	0.04	0.4 U	0.5	0.4
Carbon Tetrachloride	0.46	0.2 U	0.2	0.04	0.1 U	0.2	0.1	0.1 U	0.2	0.1	0.1 U	0.2	0.1	0.2 U	0.2	0.04	0.1 U	0.2	0.1
Chlorobenzene	270	0.2 U	0.2	0.02	0.1 U	0.5	0.1	0.1 U	0.5	0.1	0.1 U	0.5	0.1	0.2 U	0.2	0.02	0.1 U	0.5	0.1
Chloroethane	21,000	0.2 U	0.2	0.09	0.1 U	0.5	0.1	0.1 U	0.5	0.1	0.1 U	0.5	0.1	0.2 U	0.2	0.09	0.1 U	0.5	0.1
Chloroform	9.4	0.2 U	0.2	0.03	0.1 U	0.2	0.1	0.1 U	0.2	0.1	0.1 U	0.2	0.1	0.2 U	0.2	0.03	0.1 U	0.2	0.1
Chloromethane	10.3	0.5 U	0.5	0.10	0.2 U	0.5	0.2	0.2 U	0.5	0.2	0.2 U	0.5	0.2	0.5 U	0.5	0.10	0.2 U	0.5	0.2
2-Chlorotoluene	---	0.2 U	0.2	0.02	0.1 U	0.5	0.1	0.1 U	0.5	0.1	0.1 U	0.5	0.1	0.2 U	0.2	0.02	0.1 U	0.5	0.1
4-Chlorotoluene	2600	0.2 U	0.2	0.02	0.1 U	0.5	0.1	0.1 U	0.5	0.1	0.1 U	0.5	0.1	0.2 U	0.2	0.02	0.1 U	0.5	0.1
1,2-Dibromo-3-chloropropane	---	0.5 U	0.5	0.04	0.2 U	0.5	0.2	0.2 U	0.5	0.2	0.2 U	0.5	0.2	0.5 U	0.5	0.04	0.2 U	0.5	0.2
Dibromochloromethane	---	0.2 U	0.2	0.05	0.1 U	0.5	0.1	0.1 U	0.5	0.1	0.1 U	0.5	0.1	0.2 U	0.2	0.05	0.1 U	0.5	0.1
Dibromomethane	---	0.2 U	0.2	0.14	0.1 U	0.5	0.1	0.1 U	0.5	0.1	0.1 U	0.5	0.1	0.2 U	0.2	0.14	0.1 U	0.5	0.1
trans-1,4-Dichloro-2-butene	---	1.0 U	1.0	0.32	1.0 U	5.0	1.0	1.0 UJ	5.0	1.0	1.0 U	5.0	1.0	1.0 U	1.0	0.32	1.0 U	5.0	1.0
1,2-Dichlorobenzene	440	0.2 U	0.2	0.04	0.1 U	0.5	0.1	0.1 U	0.5	0.1	0.1 U	0.5	0.1	0.2 U	0.2	0.04	0.1 U	0.5	0.1
1,3-Dichlorobenzene	960	0.2 U	0.2	0.04	0.1 U	0.5	0.1	0.1 U	0.5	0.1	0.1 U	0.5	0.1	0.2 U	0.2	0.04	0.1 U	0.5	0.1
1,4-Dichlorobenzene	1.7	0.2 U	0.2	0.04	0.1 U	0.5	0.1	0.1 U	0.5	0.1	0.1 U	0.5	0.1	0.2 U	0.2	0.04	0.1 U	0.5	0.1
1,1-Dichloroethane	33	0.2 U	0.2	0.05	0.1 U	0.5	0.1	0.1 U	0.5	0.1	0.1 U	0.5	0.1	0.2 U	0.2	0.05	0.1 U	0.5	0.1
1,2-Dichloroethane	3.6	0.2 U	0.2	0.07	0.1 U	0.2	0.1	0.1 U	0.2	0.1	0.1 U	0.2	0.1	0.2 U	0.2	0.07	0.1 U	0.2	0.1
1,1-Dichloroethene	3.2	0.2 U	0.2	0.05	0.1 U	0.2	0.1	0.1 U	0.2	0.1	0.1 U	0.2	0.1	0.2 U	0.2	0.05	0.1 U	0.2	0.1
cis-1,2-Dichloroethene	130	**0.4**	0.2	0.04	**0.4**	0.2	0.1	**0.3**	0.2	0.1	**0.1** J1	0.2	0.1	**0.1** J1	0.2	0.04	**0.1** J1	0.2	0.1
trans-1,2-Dichloroethene	940	0.2 U	0.2	0.05	0.1 U	0.2	0.1	0.1 U	0.2	0.1	0.1 U	0.2	0.1	0.2 U	0.2	0.05	0.1 U	0.2	0.1
1,2-Dichloropropane	3.7	**0.2**	0.2	0.04	**0.2** J1	0.5	0.1	**0.2** J1	0.5	0.1	0.1 U	0.5	0.1	0.2 U	0.2	0.04	0.1 U	0.5	0.1
1,3-Dichloropropane	---	0.2 U	0.2	0.06	0.1 U	0.5	0.1	0.1 U	0.5	0.1	0.1 U	0.5	0.1	0.2 U	0.2	0.06	0.1 U	0.5	0.1
2,2-Dichloropropane	---	0.2 U	0.2	0.05	0.1 U	0.5	0.1	0.1 U	0.5	0.1	0.1 U	0.5	0.1	0.2 U	0.2	0.05	0.1 U	0.5	0.1
1,1-Dichloropropene	---	0.2 U	0.2	0.03	0.1 U	0.5	0.1	0.1 U	0.5	0.1	0.1 U	0.5	0.1	0.2 U	0.2	0.03	0.1 U	0.5	0.1
cis-1,3-Dichloropropene	---	0.2 U	0.2	0.06	0.1 U	0.2	0.1	0.1 U	0.2	0.1	0.1 U	0.2	0.1	0.2 U	0.2	0.06	0.1 U	0.2	0.1
trans-1,3-Dichloropropene	---	0.2 U	0.2	0.08	0.1 U	0.2	0.1	0.1 U	0.2	0.1	0.1 U	0.2	0.1	0.2 U	0.2	0.08	0.1 U	0.2	0.1
Ethylbenzene	1.7	0.2 U	0.2	0.04	0.1 U	0.5	0.1	0.1 U	0.5	0.1	0.1 U	0.5	0.1	0.2 U	0.2	0.04	0.1 U	0.5	0.1
Ethylene Dibromide	---	0.2 U	0.2	0.08	0.1 U	0.5	0.1	0.1 U	0.5	0.1	0.1 U	0.5	0.1	0.2 U	0.2	0.08	0.1 U	0.5	0.1
Hexachlorobutadiene	---	0.5 U	0.5	0.07	0.1 U	0.5	0.1	0.1 U	0.5	0.1	0.1 U	0.5	0.1	0.5 U	0.5	0.07	0.1 U	0.5	0.1
2-Hexanone	3200	5.0 U	5.0	0.90	1.0 U	5.0	1.0	1.0 U	5.0	1.0	1.0 U	5.0	1.0	5.0 U	5.0	0.90	1.0 U	5.0	1.0
Isopropylbenzene	270	0.2 U	0.2	0.02	0.1 U	0.5	0.1	0.1 U	0.5	0.1	0.1 U	0.5	0.1	0.2 U	0.2	0.02	0.1 U	0.5	0.1
4-Isopropyltoluene	---	0.2 U	0.2	0.03	0.1 U	0.5	0.1	0.1 U	0.5	0.1	0.1 U	0.5	0.1	0.2 U	0.2	0.03	0.1 U	0.5	0.1
Methyl Iodide	---	1.0 U	1.0	0.23	0.1 U	0.5	0.1	0.1 U	0.5	0.1	0.1 U	0.5	0.1	1.0 U	1.0	0.23	0.1 U	0.5	0.1
4-Methyl-2-Pentanone (MIBK)	19,000	5.0 U	5.0	0.97	1.0 U	5.0	1.0	1.0 U	5.0	1.0	1.0 U	5.0	1.0	5.0 U	5.0	0.97	1.0 U	5.0	1.0
Methylene Chloride	230	0.5 U	0.5	0.48	0.2 U	0.5	0.2	0.2 U	0.5	0.2	0.2 U	0.5	0.2	0.5 U	0.5	0.48	0.2 U	0.5	0.2
Naphthalene	26	0.5 U	0.5	0.12	0.1 U	0.5	0.1	0.1 U	0.5	0.1	**0.9**	0.5	0.1	0.5 U	0.5	0.12	0.1 U	0.5	0.1
n-Propylbenzene	530	0.2 U	0.2	0.02	0.1 U	0.5	0.1	0.1 U	0.5	0.1	0.1 U	0.5	0.1	0.2 U	0.2	0.02	0.1 U	0.5	0.1
Styrene	77,000	0.2 U	0.2	0.04	0.1 U	0.5	0.1	0.1 U	0.5	0.1	0.1 U	0.5	0.1	0.2 U	0.2	0.04	0.1 U	0.5	0.1
1,1,1,2-Tetrachloroethane	---	0.2 U	0.2	0.04	0.1 U	0.5	0.1	0.1 U	0.5	0.1	0.1 U	0.5	0.1	0.2 U	0.2	0.04	0.1 U	0.5	0.1
1,1,2,2-Tetrachloroethane	0.33	0.2 U	0.2	0.06	0.1 U	0.2	0.1	0.1 U	0.2	0.1	0.1 U	0.2	0.1	0.2 U	0.2	0.06	0.1 U	0.2	0.1
Tetrachloroethene	3.3	0.2 U	0.2	0.05	0.1 U	0.2	0.1	0.1 U	0.2	0.1	0.1 U	0.2	0.1	0.2 U	0.2	0.05	0.1 U	0.2	0.1
Toluene	1300	0.2 U	0.2	0.04	0.1 U	0.2	0.1	0.1 U	0.2	0.1	0.1 U	0.2	0.1	0.2 U	0.2	0.04	0.1 U	0.2	0.1
1,1,2-Trichloro-1,2,2-trifuoroethane	59,000	0.2 U	0.2	0.04	0.2 U	0.5	0.2	0.2 U	0.5	0.2	0.2 U	0.5	0.2	0.2 U	0.2	0.04	0.2 U	0.5	0.2
1,2,3-Trichlorobenzene	---	0.5 U	0.5	0.11	0.1 U	0.5	0.1	0.1 U	0.5	0.1	0.1 U	0.5	0.1	0.5 U	0.5	0.11	0.1 U	0.5	0.1

TABLE L-1
GROUNDWATER ANALYTICAL RESULTS
BOEING ISAACSON-THOMPSON
REMEDIAL INVESTIGATION

Location:		IT-PZ-2			IT-PZ-2			IT-PZ-2			IT-PZ-2			IT-PZ-3			IT-PZ-3		
Laboratory Sample ID:	Preliminary	UB28D/UB28J/UB29D/UB29I			6572515/6572516/UL36C			6693944/6693945/6693946/UZ37A			6790512/6790513/6790514/VJ63E			UB28E/UB28K/UB29E/UB29J/UD90B			6568992/6568993/UK92C		
Laboratory Data Package ID:	Cleanup	UB28/UB29			1294218/UL36			1317022/UZ37			1335985/VJ63			UB28/UB29/UD90			1293530/UK92		
Sample Date:	Levels	12/14/2011			03/08/2012			6/19/2012			9/14/2012			12/14/2011			03/06/2012		
		Result	Reporting Limit	Detection Limit	Result	Reporting Limit	Detection Limit	Result	Reporting Limit	Detection Limit	Result	Reporting Limit	Detection Limit	Result	Reporting Limit	Detection Limit	Result	Reporting Limit	Detection Limit
1,2,4-Trichlorobenzene	1.13	0.5 U	0.5	0.11	0.1 U	0.5	0.1	0.1 U	0.5	0.1	0.1 U	0.5	0.1	0.5 U	0.5	0.11	0.1 U	0.5	0.1
1,1,1-Trichloroethane	46,000	0.2 U	0.2	0.04	0.1 U	0.5	0.1	0.1 U	0.5	0.1	0.1 U	0.5	0.1	0.2 U	0.2	0.04	0.1 U	0.5	0.1
1,1,2-Trichloroethane	2.3	0.2 U	0.2	0.13	0.1 U	0.2	0.1	0.1 U	0.2	0.1	0.1 U	0.2	0.1	0.2 U	0.2	0.13	0.1 U	0.2	0.1
Trichloroethene	1.4	0.2 U	0.2	0.05	0.1 U	0.2	0.1	0.1 U	0.2	0.1	0.1 U	0.2	0.1	0.2 U	0.2	0.05	0.1 U	0.2	0.1
Trichlorofluoromethane	6900	0.2 U	0.2	0.04	0.1 U	0.5	0.1	0.1 U	0.5	0.1	0.1 U	0.5	0.1	0.2 U	0.2	0.04	0.1 U	0.5	0.1
1,2,3-Trichloropropane	---	0.5 U	0.5	0.13	0.3 U	1.0	0.3	0.3 U	1.0	0.3	0.3 U	1.0	0.3	0.5 U	0.5	0.13	0.3 U	1.0	0.3
1,2,4-Trimethylbenzene	303	0.2 U	0.2	0.02	0.1 U	0.5	0.1	0.1 U	0.5	0.1	0.1 U	0.5	0.1	0.2 U	0.2	0.02	0.1 U	0.5	0.1
1,3,5-Trimethylbenzene	303	0.2 U	0.2	0.02	0.1 U	0.5	0.1	0.1 U	0.5	0.1	0.1 U	0.5	0.1	0.2 U	0.2	0.02	0.1 U	0.5	0.1
Vinyl Acetate	---	1.0 U	1.0	0.07	0.2 U	0.5	0.2	0.2 U	0.5	0.2	0.2 U	0.5	0.2	1.0 U	1.0	0.07	0.2 U	0.5	0.2
Vinyl Chloride	0.53	0.2 U	0.2	0.06	0.1 U	0.2	0.1	0.1 U	0.2	0.1	0.1 U	0.2	0.1	0.2 U	0.2	0.06	0.1 U	0.2	0.1
m,p-Xylene	1300	0.4 U	0.4	0.05	0.1 U	0.5	0.1	0.1 U	0.5	0.1	0.1 U	0.5	0.1	0.4 U	0.4	0.05	0.1 U	0.5	0.1
o-Xylene	1600	0.2 U	0.2	0.04	0.1 U	0.5	0.1	0.1 U	0.5	0.1	0.1 U	0.5	0.1	0.2 U	0.2	0.04	0.1 U	0.5	0.1
2-Chloroethylvinylether	---	1.0 U	1.0	0.25	NA	NA	NA	NA	NA	NA	NA	NA	NA	1.0 U	1.0	0.25	NA	NA	NA
Bromoethane	---	0.2 U	0.2	0.04	NA	NA	NA	NA	NA	NA	NA	NA	NA	0.2 U	0.2	0.04	NA	NA	NA
VOLATILES (µg/L)																			
Method SW8260C-SIM																			
Tetrachloroethene	3.3	0.020 U	0.020	0.0036	0.010 U	0.020	0.010	0.010 U	0.020	0.010	0.010 U	0.020	0.010	0.020 U	0.020	0.0036	0.010 U	0.020	0.010
Vinyl Chloride	0.53	0.020 U	0.020	0.0022	**0.026**	0.020	0.010	**0.017** J1	0.020	0.010	0.010 U	0.020	0.010	0.020 U	0.020	0.0022	**0.023**	0.020	0.010
Acrylonitrile	0.057	0.050 U	0.050	0.0158	NA	NA	NA	NA	NA	NA	NA	NA	NA	0.050 U	0.050	0.0158	NA	NA	NA
SEMIVOLATILES (µg/L)																			
Method SW8270D																			
Acenaphthene	120	1.0 U	1.0	0.55	**0.6**	0.5	0.1	**1**	0.5	0.1	**0.6**	0.5	0.1	1.0 U	1.0	0.55	0.1 U	0.5	0.1
Acenaphthylene	---	1.0 U	1.0	0.48	0.1 U	0.5	0.1	0.1 U	0.5	0.1	0.1 U	0.5	0.1	1.0 U	1.0	0.48	0.1 U	0.5	0.1
Anthracene	200	1.0 U	1.0	0.53	0.1 U	0.5	0.1	0.1 U	0.5	0.1	0.1 U	0.5	0.1	1.0 U	1.0	0.53	0.1 U	0.5	0.1
Benzo(a)anthracene	0.0018	1.0 U	1.0	0.52	0.1 U	0.5	0.1	0.1 U	0.5	0.1	0.1 U	0.5	0.1	1.0 U	1.0	0.52	0.1 U	0.5	0.1
Benzo(a)pyrene	0.00018	1.0 U	1.0	0.48	0.1 U	0.5	0.1	0.1 U	0.5	0.1	0.1 U	0.5	0.1	1.0 U	1.0	0.48	0.1 U	0.5	0.1
Benzo(b)fluoranthene	0.0018	NA	NA	NA	0.1 U	0.5	0.1	0.1 U	0.5	0.1	0.1 U	0.5	0.1	NA	NA	NA	0.1 U	0.5	0.1
Benzo(g,h,i)perylene	---	1.0 U	1.0	0.55	0.1 U	0.5	0.1	0.1 U	0.5	0.1	0.1 U	0.5	0.1	1.0 U	1.0	0.55	0.1 U	0.5	0.1
Benzo(k)fluoranthene	0.0018	NA	NA	NA	0.1 U	0.5	0.1	0.1 U	0.5	0.1	0.1 U	0.5	0.1	NA	NA	NA	0.1 U	0.5	0.1
Total Benzofluoranthenes	0.0018	1.0 U	1.0	0.48	NA	NA	NA	NA	NA	NA	NA	NA	NA	1.0 U	1.0	0.48	NA	NA	NA
Benzoic Acid	2,240	10 UJ	10	5.1	6 UJ	15	6	6 U	15	6	6 U	15	6	10 UJ	10	5.1	6 UJ	14	6
Benzyl Alcohol	182	5.0 U	5.0	2.0	5 U	15	5	5 U	15	5	5 U	15	5	5.0 U	5.0	2.0	5 U	14	5
4-Bromophenyl-phenylether	---	1.0 U	1.0	0.42	0.5 U	1	0.5	0.5 U	1	0.5	0.5 U	1	0.5	1.0 U	1.0	0.42	0.5 U	1	0.5
Butylbenzylphthalate	0.41	1.0 U	1.0	0.56	2 U	5	2	2 U	5	2	2 U	5	2	1.0 U	1.0	0.56	2 U	5	2
Di-n-Butylphthalate	47	1.0 U	1.0	0.54	2 U	5	2	2 U	5	2	2 U	5	2	1.0 U	1.0	0.54	2 U	5	2
Carbazole	---	1.0 U	1.0	0.31	0.5 U	1	0.5	0.5 U	1	0.5	0.5 U	1	0.5	1.0 U	1.0	0.31	0.5 U	1	0.5
4-Chloro-3-methylphenol	3700	5.0 U	5.0	2.4	0.5 U	1	0.5	0.5 U	1	0.5	0.5 U	1	0.5	5.0 U	5.0	2.4	0.5 U	1	0.5
4-Chloroaniline	---	5.0 U	5.0	2.6	0.5 U	1	0.5	0.5 U	1	0.5	0.5 U	1	0.5	5.0 U	5.0	2.6	0.5 U	1	0.5
bis(2-Chloroethoxy) Methane	---	1.0 U	1.0	0.56	0.5 U	1	0.5	0.5 U	1	0.5	0.5 U	1	0.5	1.0 U	1.0	0.56	0.5 U	1	0.5
Bis-(2-Chloroethyl) Ether	---	1.0 U	1.0	0.58	0.5 U	1	0.5	0.5 U	1	0.5	0.5 U	1	0.5	1.0 U	1.0	0.58	0.5 U	1	0.5
2-Chloronaphthalene	---	1.0 U	1.0	0.48	0.4 U	1	0.4	0.4 U	1	0.4	0.4 U	1	0.4	1.0 U	1.0	0.48	0.4 U	1	0.4
2-Chlorophenol	---	1.0 U	1.0	0.53	0.5 U	1	0.5	0.5 U	1	0.5	0.5 U	1	0.5	1.0 U	1.0	0.53	0.5 U	1	0.5
4-Chlorophenyl-phenylether	---	1.0 U	1.0	0.45	0.5 U	1	0.5	0.5 U	1	0.5	0.5 U	1	0.5	1.0 U	1.0	0.45	0.5 U	1	0.5
2,2'-Oxybis(1-Chloropropane)	---	1.0 U	1.0	0.62	0.5 U	1	0.5	0.5 U	1	0.5	0.5 U	1	0.5	1.0 U	1.0	0.62	0.5 U	1	0.5
Chrysene	0.018	1.0 U	1.0	0.55	0.1 U	0.5	0.1	0.1 U	0.5	0.1	0.1 U	0.5	0.1	1.0 U	1.0	0.55	0.1 U	0.5	0.1
Dibenz(a,h)anthracene	0.0018	1.0 U	1.0	0.48	0.1 U	0.5	0.1	0.1 U	0.5	0.1	0.1 U	0.5	0.1	1.0 U	1.0	0.48	0.1 U	0.5	0.1
Dibenzofuran	1.3	1.0 U	1.0	0.48	0.5 U	1	0.5	0.5 U	1	0.5	0.5 U	1	0.5	1.0 U	1.0	0.48	0.5 U	1	0.5
1,2-Dichlorobenzene	440	1.0 U	1.0	0.36	0.5 U	1	0.5	0.5 U	1	0.5	0.5 U	1	0.5	1.0 U	1.0	0.36	0.5 U	1	0.5
1,3-Dichlorobenzene	---	1.0 U	1.0	0.36	0.5 U	1	0.5	0.5 U	1	0.5	0.5 U	1	0.5	1.0 U	1.0	0.36	0.5 U	1	0.5
1,4-Dichlorobenzene	1.7	1.0 U	1.0	0.40	0.5 U	1	0.5	0.5 U	1	0.5	0.5 U	1	0.5	1.0 U	1.0	0.40	0.5 U	1	0.5
3,3'-Dichlorobenzidine	---	5.0 U	5.0	1.5	2 U	5	2	2 U	5	2	2 U	5	2	5.0 U	5.0	1.5	2 U	5	2
2,4-Dichlorophenol	---	5.0 U	5.0	2.6	0.5 U	1	0.5	0.5 U	1	0.5	0.5 U	1	0.5	5.0 U	5.0	2.6	0.5 U	1	0.5
Diethylphthalate	4,236	1.0 U	1.0	0.58	2 U	5	2	2 U	5	2	2 U	5	2	1.0 U	1.0	0.58	2 U	5	2
2,4-Dimethylphenol	660	1.0 U	1.0	0.36	0.5 U	1	0.5	0.5 U	1	0.5	0.5 U	1	0.5	1.0 U	1.0	0.36	0.5 U	1	0.5
Dimethylphthalate	1,100,000	1.0 U	1.0	0.53	2 U	5	2	2 U	5	2	2 U	5	2	1.0 U	1.0	0.53	2 U	5	2
4,6-Dinitro-2-Methylphenol	---	10 U	10	3.1	5 U	15	5	5 U	15	5	5 U	15	5	10 U	10	3.1	5 U	14	5
2,4-Dinitrophenol	---	10 UJ	10	3.5	10 U	29	10	10 U	29	10	10 U	30	10	10 UJ	10	3.5	10 U	29	10
2,4-Dinitrotoluene	---	5.0 U	5.0	2.5	1 U	5	1	1 U	5	1	1 U	5	1	5.0 U	5.0	2.5	1 U	5	1
2,6-Dinitrotoluene	---	5.0 U	5.0	2.4	0.5 U	1	0.5	0.5 U	1	0.5	0.5 U	1	0.5	5.0 U	5.0	2.4	0.5 U	1	0.5
bis(2-Ethylhexyl)phthalate	1.2	1.0 U	1.0	1.9	2 U	5	2	2 U	5	2	2 U	5	2	1.0 U	1.0	1.9	2 U	5	2

TABLE L-1
GROUNDWATER ANALYTICAL RESULTS
BOEING ISAACSON-THOMPSON
REMEDIAL INVESTIGATION

Location:		IT-PZ-2			IT-PZ-2			IT-PZ-2			IT-PZ-2			IT-PZ-3			IT-PZ-3		
Laboratory Sample ID:	Preliminary	UB28D/UB28J/UB29D/UB29I			6572515/6572516/UL36C			6693944/6693945/6693946/UZ37A			6790512/6790513/6790514/VJ63E			UB28E/UB28K/UB29E/UB29J/UD90B			6568992/6568993/UK92C		
Laboratory Data Package ID:	Cleanup	UB28/UB29			1294218/UL36			1317022/UZ37			1335985/VJ63			UB28/UB29/UD90			1293530/UK92		
Sample Date:	Levels	12/14/2011			03/08/2012			6/19/2012			9/14/2012			12/14/2011			03/06/2012		
		Result	Reporting Limit	Detection Limit	Result	Reporting Limit	Detection Limit	Result	Reporting Limit	Detection Limit	Result	Reporting Limit	Detection Limit	Result	Reporting Limit	Detection Limit	Result	Reporting Limit	Detection Limit
Fluoranthene	11	1.0 U	1.0	0.52	0.1 U	0.5	0.1	0.1 U	0.5	0.1	0.1 U	0.5	0.1	1.0 U	1.0	0.52	0.1 U	0.5	0.1
Fluorene	45	1.0 U	1.0	0.56	0.1 U	0.5	0.1	0.1 U	0.5	0.1	0.1 U	0.5	0.1	1.0 U	1.0	0.56	0.1 U	0.5	0.1
Hexachlorobenzene	---	1.0 U	1.0	0.47	0.1 U	0.5	0.1	0.1 U	0.5	0.1	0.1 U	0.5	0.1	1.0 U	1.0	0.47	0.1 U	0.5	0.1
Hexachlorobutadiene	---	1.0 U	1.0	0.31	0.5 U	1	0.5	0.5 U	1	0.5	0.5 U	1	0.5	1.0 U	1.0	0.31	0.5 U	1	0.5
Hexachlorocyclopentadiene	---	5.0 U	5.0	1.2	5 U	15	5	5 U	15	5	5 U	15	5	5.0 U	5.0	1.2	5 U	14	5
Hexachloroethane	---	1.0 U	1.0	0.35	1 U	5	1	1 U	5	1	1 U	5	1	1.0 U	1.0	0.35	1 U	5	1
Indeno(1,2,3-cd)pyrene	0.0018	1.0 U	1.0	0.48	0.1 U	0.5	0.1	0.1 U	0.5	0.1	0.1 U	0.5	0.1	1.0 U	1.0	0.48	0.1 U	0.5	0.1
Isophorone	---	1.0 U	1.0	0.48	0.5 U	1	0.5	0.5 U	1	0.5	0.5 U	1	0.5	1.0 U	1.0	0.48	0.5 U	1	0.5
1-Methylnaphthalene	2.3	1.0 U	1.0	0.48	0.1 U	0.5	0.1	0.1 U	0.5	0.1	0.1 U	0.5	0.1	1.0 U	1.0	0.48	0.1 U	0.5	0.1
2-Methylnaphthalene	64	1.0 U	1.0	0.48	0.1 U	0.5	0.1	0.1 U	0.5	0.1	0.1 U	0.5	0.1	1.0 U	1.0	0.48	0.1 U	0.5	0.1
2-Methylphenol	3100	1.0 U	1.0	0.53	0.5 U	1	0.5	0.5 U	1	0.5	0.5 U	1	0.5	1.0 U	1.0	0.53	0.5 U	1	0.5
4-Methylphenol	330	1.0 U	1.0	0.52	0.5 U	1	0.5	0.5 U	1	0.5	0.5 U	1	0.5	1.0 U	1.0	0.52	0.5 U	1	0.5
Naphthalene	26	1.0 U	1.0	0.52	**0.2** J1	0.5	0.1	**0.1** J1	0.5	0.1	**0.7**	0.5	0.1	1.0 U	1.0	0.52	0.1 U	0.5	0.1
2-Nitroaniline	---	5.0 U	5.0	2.6	0.5 U	1	0.5	0.5 U	1	0.5	0.5 U	1	0.5	5.0 U	5.0	2.6	0.5 U	1	0.5
3-Nitroaniline	---	5.0 U	5.0	2.3	0.5 U	1	0.5	0.5 U	1	0.5	0.5 U	1	0.5	5.0 U	5.0	2.3	0.5 U	1	0.5
4-Nitroaniline	---	5.0 U	5.0	2.2	0.5 U	1	0.5	0.5 U	1	0.5	0.5 U	1	0.5	5.0 U	5.0	2.2	0.5 U	1	0.5
Nitrobenzene	---	1.0 U	1.0	0.58	0.5 U	1	0.5	0.5 U	1	0.5	0.5 U	1	0.5	1.0 U	1.0	0.58	0.5 U	1	0.5
2-Nitrophenol	---	5.0 U	5.0	2.0	0.5 U	1	0.5	0.5 U	1	0.5	0.5 U	1	0.5	5.0 U	5.0	2.0	0.5 U	1	0.5
4-Nitrophenol	---	5.0 U	5.0	2.6	10 U	29	10	10 U	29	10	10 U	30	10	5.0 U	5.0	2.6	10 U	29	10
N-Nitroso-Di-N-Propylamine	---	1.0 U	1.0	0.56	0.5 U	1	0.5	0.5 U	1	0.5	0.5 U	1	0.5	1.0 U	1.0	0.56	0.5 U	1	0.5
N-Nitrosodiphenylamine	1.96	1.0 U	1.0	0.46	0.5 U	1	0.5	0.5 U	1	0.5	0.5 U	1	0.5	1.0 U	1.0	0.46	0.5 U	1	0.5
Di-n-Octyl phthalate	---	1.0 U	1.0	0.51	2 U	5	2	2 U	5	2	2 U	5	2	1.0 U	1.0	0.51	2 U	5	2
Pentachlorophenol	---	5.0 U	5.0	2.4	1 U	5	1	1 U	5	1	1 U	5	1	5.0 U	5.0	2.4	1 U	5	1
Phenanthrene	---	1.0 U	1.0	0.56	0.1 U	0.5	0.1	0.1 U	0.5	0.1	0.1 U	0.5	0.1	1.0 U	1.0	0.56	0.1 U	0.5	0.1
Phenol	41,000	1.0 U	1.0	0.52	0.5 U	1	0.5	0.5 U	1	0.5	0.5 U	1	0.5	1.0 U	1.0	0.52	0.5 U	1	0.5
Pyrene	9.8	1.0 U	1.0	0.55	0.1 U	0.5	0.1	0.1 U	0.5	0.1	0.1 U	0.5	0.1	1.0 U	1.0	0.55	0.1 U	0.5	0.1
1,2,4-Trichlorobenzene	1.13	1.0 U	1.0	0.38	0.5 U	1	0.5	0.5 U	1	0.5	0.5 U	1	0.5	1.0 U	1.0	0.38	0.5 U	1	0.5
2,4,5-Trichlorophenol	---	5.0 U	5.0	2.2	0.5 U	1	0.5	0.5 U	1	0.5	0.5 U	1	0.5	5.0 U	5.0	2.2	0.5 U	1	0.5
2,4,6-Trichlorophenol	---	5.0 U	5.0	2.4	0.5 U	1	0.5	0.5 U	1	0.5	0.5 U	1	0.5	5.0 U	5.0	2.4	0.5 U	1	0.5
cPAHs (µg/L)																			
Method SW8270D-SIM																			
Benzo(a)anthracene	0.0018	0.010 U	0.010	0.0063	0.0048 U	0.0095	0.0048	0.0049 U	0.0098	0.0049	0.0049 U	0.0098	0.0049	0.010 U	0.010	0.0063	0.0048 U	0.0095	0.0048
Benzo(a)pyrene	0.00018	0.010 U	0.010	0.0048	0.0048 U	0.0095	0.0048	0.0049 U	0.0098	0.0049	0.0049 U	0.0098	0.0049	0.010 U	0.010	0.0048	0.0048 U	0.0095	0.0048
Benzo(b)fluoranthene	0.0018	NA	NA	NA	0.0048 U	0.0095	0.0048	0.0049 U	0.0098	0.0049	0.0049 U	0.0098	0.0049	NA	NA	NA	0.0048 U	0.0095	0.0048
Benzo(k)fluoranthene	0.0018	NA	NA	NA	0.0048 U	0.0095	0.0048	0.0049 U	0.0098	0.0049	0.0049 U	0.0098	0.0049	NA	NA	NA	0.0048 U	0.0095	0.0048
Total Benzofluoranthenes	0.0018	0.020 U	0.020	0.0099	NA	NA	NA	NA	NA	NA	NA	NA	NA	0.020 U	0.020	0.0099	NA	NA	NA
Chrysene	0.018	0.010 U	0.010	0.0046	0.0048 U	0.0095	0.0048	0.0049 U	0.0098	0.0049	0.0049 U	0.0098	0.0049	0.010 U	0.010	0.0046	0.0048 U	0.0095	0.0048
Dibenz(a,h)anthracene	0.0018	0.010 U	0.010	0.0048	0.0038 U	0.0095	0.0038	0.0039 U	0.0098	0.0039	0.0039 U	0.0098	0.0039	0.010 U	0.010	0.0048	0.0038 U	0.0095	0.0038
Indeno(1,2,3-cd)pyrene	0.0018	0.010 U	0.010	0.0046	0.0038 U	0.0095	0.0038	0.0039 U	0.0098	0.0039	0.0039 U	0.0098	0.0039	0.010 U	0.010	0.0046	0.0038 U	0.0095	0.0038
Pyrene	9.8	NA	NA	NA	0.0095 U	0.048	0.0095	0.0098 U	0.049	0.0098	0.0098 U	0.049	0.0098	NA	NA	NA	0.0095 U	0.047	0.0095
cPAH TEQ	0.00018	ND	NA	NA	ND	NA	NA	ND	NA	NA	ND	NA	NA	ND	NA	NA	ND	NA	NA
PCBs (µg/L)																			
Method SW8082																			
Aroclor 1016	0.000023	0.010 U	0.010	0.0025	0.0057 U	0.0095	0.0057	0.0057 U	0.0095	0.0057	0.0059 U	0.0099	0.0059	0.010 U	0.010	0.0025	0.0062 U	0.010	0.0062
Aroclor 1221	---	0.010 U	0.010	0.0028	0.0057 U	0.0095	0.0057	0.0057 U	0.0095	0.0057	0.0059 U	0.0099	0.0059	0.010 U	0.010	0.0028	0.0062 U	0.010	0.0062
Aroclor 1232	---	0.010 U	0.010	0.0028	0.0067 U	0.0095	0.0067	0.0067 U	0.0095	0.0067	0.0069 U	0.0099	0.0069	0.010 U	0.010	0.0028	0.0072 U	0.010	0.0072
Aroclor 1242	0.000023	0.010 U	0.010	0.0028	0.0057 U	0.0095	0.0057	0.0057 U	0.0095	0.0057	0.0059 U	0.0099	0.0059	0.010 U	0.010	0.0028	0.0062 U	0.010	0.0062
Aroclor 1248	0.000023	0.010 U	0.010	0.0028	0.0048 U	0.0095	0.0048	0.0048 U	0.0095	0.0048	0.0049 U	0.0099	0.0049	0.010 U	0.010	0.0028	0.0051 U	0.010	0.0051
Aroclor 1254	0.0000055	0.010 U	0.010	0.0028	0.0048 U	0.0095	0.0048	0.0048 U	0.0095	0.0048	0.0049 U	0.0099	0.0049	0.010 U	0.010	0.0028	0.0051 U	0.010	0.0051
Aroclor 1260	0.000023	0.010 U	0.010	0.0028	0.0048 U	0.0095	0.0048	0.0048 U	0.0095	0.0048	0.0049 U	0.0099	0.0049	0.010 U	0.010	0.0028	0.0051 U	0.010	0.0051
Total PCBs	0.000023	ND	NA	NA	ND	NA	NA	ND	NA	NA	ND	NA	NA	ND	NA	NA	ND	NA	NA

TABLE L-1
GROUNDWATER ANALYTICAL RESULTS
BOEING ISAACSON-THOMPSON
REMEDIAL INVESTIGATION

Location:		IT-PZ-2			IT-PZ-2			IT-PZ-2			IT-PZ-2			IT-PZ-3			IT-PZ-3		
Laboratory Sample ID:	Preliminary	UB28D/UB28J/UB29D/UB29I			6572515/6572516/UL36C			6693944/6693945/6693946/UZ37A			6790512/6790513/6790514/VJ63E			UB28E/UB28K/UB29E/UB29J/UD90B			6568992/6568993/UK92C		
Laboratory Data Package ID:	Cleanup	UB28/UB29			1294218/UL36			1317022/UZ37			1335985/VJ63			UB28/UB29/UD90			1293530/UK92		
Sample Date:	Levels	12/14/2011			03/08/2012			6/19/2012			9/14/2012			12/14/2011			03/06/2012		
		Result	Reporting Limit	Detection Limit	Result	Reporting Limit	Detection Limit	Result	Reporting Limit	Detection Limit	Result	Reporting Limit	Detection Limit	Result	Reporting Limit	Detection Limit	Result	Reporting Limit	Detection Limit
TOTAL PETROLEUM HYDROCARBONS (mg/L)																			
NWTPH-Dx																			
Diesel-Range Organics	0.5	0.10 U	0.10	0.022	0.068 U	0.24	0.068	0.029 U	0.098	0.029	0.031 U	0.100	0.031	0.10 U	0.10	0.022	0.069 U	0.25	0.069
Oil-Range Organics	0.5	0.20 U	0.20	0.044	0.98 U	2.9	0.98	0.069 U	0.250	0.069	0.073 U	0.260	0.073	0.20 U	0.20	0.044	0.99 U	3.0	0.99
NWTPH-G																			
Gasoline-Range Organics	1.0/0.8	0.25 U	0.25	0.06	0.05 U	0.25	0.05	0.05 U	0.25	0.05	0.05 U	0.25	0.05	0.25 U	0.25	0.06	0.05 U	0.25	0.05
TOTAL METALS (µg/L)																			
Method 200.8																			
Antimony	---	0.2 U	0.2	0.010	0.42 U	1.0	0.42	0.33 U	1.0	0.33	0.33 U	1.0	0.33	0.2 U	0.2	0.010	0.42 U	1.0	0.42
Arsenic	---	**8.8**	0.2	0.048	**8.9**	2.0	0.95	**3.8**	2.0	0.20	**20.2**	2.0	0.40	2.4U/**2.5***	0.2	0.048	0.95 U	2.0	0.95
Barium	---	**14.1**	0.5	0.020	**11.2**	2.0	0.69	**11.9**	2.0	0.41	**18.9**	2.0	0.41	**6.4**	0.5	0.020	**5.3**	2.0	0.69
Beryllium	---	0.2 U	0.2	0.021	0.13 U	0.50	0.13	**0.074** J1	0.50	0.025	**0.080** J1	0.50	0.025	0.2 U	0.2	0.021	0.13 U	0.50	0.13
Cadmium	---	0.1 U	0.1	0.010	0.20 U	0.50	0.20	0.048 U	0.50	0.048	0.082 U	0.50	0.082	0.1 U	0.1	0.010	0.20 U	0.50	0.20
Chromium	---	2 U	2	0.22	**2.3**	2.0	0.60	**2.8**	2.0	0.50	**3.5**	2.0	0.50	**0.7**	0.5	0.045	0.60 U	2.0	0.60
Copper	---	**1.4**	0.5	0.158	0.38 U	2.0	0.38	0.42 UJ2	2.0	0.15	**1.4** J1	2.0	0.40	**1.2**	0.5	0.158	**0.70** J1	2.0	0.38
Lead	---	**0.2**	0.1	0.046	0.080 U	1.0	0.080	**0.14** J1	1.0	0.034	0.034 U	1.0	0.034	**0.3**	0.1	0.046	**0.16** J1	1.0	0.080
Nickel	---	**0.8**	0.5	0.079	0.50 U	2.0	0.50	**0.55** J1	2.0	0.13	**1.1** J1	2.0	0.35	**0.6**	0.5	0.079	0.50 U	2.0	0.50
Selenium	---	**0.7**	0.5	0.127	0.27 U	2.0	0.27	**0.20** J1	2.0	0.18	0.50 U	2.0	0.50	0.5 U	0.5	0.127	0.27 U	2.0	0.27
Silver	---	0.2 U	0.2	0.008	0.098 U	0.50	0.098	0.10 U	0.50	0.10	0.10 U	0.50	0.10	0.2 U	0.2	0.008	0.098 U	0.50	0.098
Thallium	---	0.2 U	0.2	0.004	0.15 U	0.50	0.15	0.029 U	0.50	0.029	0.15 U	0.50	0.15	0.2 U	0.2	0.004	0.15 U	0.50	0.15
Zinc	---	4 U	4	0.50	4.0 U	15.0	4.0	**1.4** J1	15.0	1.1	1.1 U	15.0	1.1	**12**	4	0.50	**6.0** J1	15.0	4.0
Method SW7196A (mg/L)																			
Chromium VI	0.00058	0.010 U	0.010	0.00300	0.010 U	0.010	0.00300	0.010 U	0.010	0.00300	0.010 U	0.010	0.00300	0.010 U	0.010	0.00300	0.010 U	0.010	0.00300
Method SW7470A/EPA 1631E (ng/L)																			
Mercury	12	20.0 U	20.0	2.60	3.20 U	10.0	3.20	1.60 U	5.00	1.60	**2.95** J1	5.00	1.60	20.0 U	20.0	2.60	**4.89** J1	5.00	1.60
DISSOLVED METALS (µg/L)																			
Methods 200.8/SW7196A																			
Antimony	150	0.2 U	0.2	0.010	0.42 U	1.0	0.42	0.33 U	1.0	0.33	0.33 U	1.0	0.33	0.2 U	0.2	0.010	0.42 U	1.0	0.42
Arsenic	8	**7.7**	0.2	0.048	**9.7**	2.0	0.95	**3.0**	2.0	0.20	**20.0**	2.0	0.40	**2.0**	0.2	0.048	0.95 U	2.0	0.95
Barium	770	**11.6**	0.5	0.020	**12.2**	2.0	0.69	**10.8**	2.0	0.41	**20.5**	2.0	0.41	**5.3**	0.5	0.020	**4.7**	2.0	0.69
Beryllium	12	0.2 U	0.2	0.021	0.13 U	0.50	0.13	**0.072** J1	0.50	0.025	**0.046** J1	0.50	0.025	0.2 U	0.2	0.021	0.13 U	0.50	0.13
Cadmium	0.25	0.1 U	0.1	0.010	0.20 U	0.50	0.20	0.048 U	0.50	0.048	0.082 U	0.50	0.082	0.1 U	0.1	0.010	0.20 U	0.50	0.20
Chromium	74	2 U	2	0.22	**2.4**	2.0	0.60	**2.6**	2.0	0.50	**3.1**	2.0	0.50	**0.8**	0.5	0.045	0.60 U	2.0	0.60
Copper	8	**0.6**	0.5	0.158	0.38 U	2.0	0.38	0.35 UJ2	2.0	0.15	0.40 U	2.0	0.40	**0.7**	0.5	0.158	0.38 U	2.0	0.38
Lead	2.5	0.1 U	0.1	0.046	0.080 U	1.0	0.080	0.034 U	1.0	0.034	0.034 U	1.0	0.034	0.1 U	0.1	0.046	0.080 U	1.0	0.080
Nickel	8.2	**0.7**	0.5	0.079	0.50 U	2.0	0.50	**0.57** J1	2.0	0.13	**0.97** J1	2.0	0.35	**0.5**	0.5	0.079	0.50 U	2.0	0.50
Selenium	5	**0.7**	0.5	0.127	0.27 U	2.0	0.27	**0.37** J1	2.0	0.18	0.50 U	2.0	0.50	0.5 U	0.5	0.127	0.27 U	2.0	0.27
Silver	22	0.2 U	0.2	0.008	0.098 U	0.50	0.098	0.10 U	0.50	0.10	0.10 U	0.50	0.10	0.2 U	0.2	0.008	0.098 U	0.50	0.098
Thallium	0.47	0.2 U	0.2	0.004	0.15 U	0.50	0.15	0.029 U	0.50	0.029	0.15 U	0.50	0.15	0.2 U	0.2	0.004	0.15 U	0.50	0.15
Zinc	56	4 U	4	0.50	4.0 U	15.0	4.0	1.1 U	15.0	1.1	**2.0** J1	15.0	1.1	4 U	4	0.50	4.0 U	15.0	4.0
Method SW7470A/EPA 1631E (ng/L)																			
Mercury	12	20.0 U	20.0	2.60	1.60 U	5.00	1.60	**1.69** J1	5.00	1.60	**3.86** J1	5.00	1.60	20.0 U	20.0	2.60	**3.53** J1	5.00	1.60
CONVENTIONALS (mg/L)																			
Chloride (Method 300.0)	---	NA	NA	NA	NA	NA	NA	**8.4**	2.0	1.0	**14.8**	2.0	1.0	NA	NA	NA	NA	NA	NA
Nitrate (Method 300.0)	---	0.1 U	0.1	0.007	0.050 U	0.10	0.050	0.25 U	0.50	0.25	0.050 U	0.10	0.050	0.1 U	0.1	0.007	0.050 U	0.10	0.050
Sulfate (Method 300.0)	---	**3.5**	0.1	0.059	**2.8**	1.0	0.30	0.30 U	1.0	0.30	**42.3**	5.0	1.5	**1.1**	0.1	0.059	**0.63** J1	1.0	0.30
Total Dissolved Solids (Method 160.1)	---	**373**	10.0	10.0	**403**	30.0	9.7	**444** J	30.0	9.7	**576**	60.0	19.4	**135**	5.0	5.00	**124**	30.0	9.7
FIELD PARAMETERS																			
Temperature (°C)	---	13.90	NA	NA	14.27	NA	NA	15.19	NA	NA	15.42	NA	NA	13.98	NA	NA	13.27	NA	NA
Conductivity (uS/cm)	---	13.11	NA	NA	724	NA	NA	464	NA	NA	606	NA	NA	444	NA	NA	122	NA	NA
Dissolved Oxygen (mg/L)	---	2.27	NA	NA	0.41	NA	NA	0.97	NA	NA	0.65	NA	NA	1.00	NA	NA	0.38	NA	NA
pH (SU)	---	6.00	NA	NA	7.62	NA	NA	7.45	NA	NA	6.93	NA	NA	5.58	NA	NA	7.38	NA	NA
ORP (mV)	---	-12.6	NA	NA	-126.7	NA	NA	-67.9	NA	NA	-83.6	NA	NA	-0.6	NA	NA	-77.4	NA	NA
Turbidity (NTU)	---	85.31	NA	NA	12.23	NA	NA	NA	NA	NA	9.6	NA	NA	49.24	NA	NA	11.42	NA	NA
Ferrous Iron (mg/L)	---	NA	NA	NA	2.0	NA	NA	2.4	NA	NA	2.2	NA	NA	NA	NA	NA	1.3	NA	NA

TABLE L-1
GROUNDWATER ANALYTICAL RESULTS
BOEING ISAACSON-THOMPSON
REMEDIAL INVESTIGATION

Location:		IT-PZ-3			IT-PZ-3			IT-PZ-4			IT-PZ-4			IT-PZ-4			IT-PZ-4		
Laboratory Sample ID:	Preliminary	6689146/6689147/6689148/UY55E			6787992/6787993/6787994/VJ03B			UA44B/UA44J/UA45B/UA45I/UB46B/UB46I			6574124/6574125/UL60A			6693956/6693957/6693958/UZ37E			6788057/6788058/6788059/VJ32I		
Laboratory Data Package ID:	Cleanup	1316071/UY55			1335480/VJ03			UA44/UA45/UB46			1294477/UL60			1317022/UZ37			1335483/VJ32		
Sample Date:	Levels	6/14/2012			9/11/2012			12/07/2011			03/09/2012			6/19/2012			9/12/2012		
		Result	Reporting Limit	Detection Limit	Result	Reporting Limit	Detection Limit	Result	Reporting Limit	Detection Limit	Result	Reporting Limit	Detection Limit	Result	Reporting Limit	Detection Limit	Result	Reporting Limit	Detection Limit
VOLATILES (µg/L)																			
Method SW8260C																			
Acetone	110,000	3.0 U	5.0	3.0	3.0 U	5.0	3.0	5.0 U	5.0	2.1	3.0 U	5.0	3.0	3.0 U	5.0	3.0	3.0 U	5.0	3.0
Acrolein	---	5.0 U	25	5.0	5.0 U	25	5.0	5.0 UJ	5.0	2.5	5.0 U	25	5.0	5.0 U	25	5.0	5.0 U	25	5.0
Acrylonitrile	0.057	1.0 U	5.0	1.0	1.0 U	5.0	1.0	1.0 U	1.0	0.60	1.0 U	5.0	1.0	1.0 U	5.0	1.0	1.0 U	5.0	1.0
Benzene	2	0.1 U	0.2	0.1	0.1 U	0.2	0.1	0.2 U	0.2	0.03	0.1 U	0.2	0.1	0.1 U	0.2	0.1	0.1 U	0.2	0.1
Bromobenzene	---	0.1 U	0.5	0.1	0.1 U	0.5	0.1	0.2 U	0.2	0.06	0.1 U	0.5	0.1	0.1 U	0.5	0.1	0.1 U	0.5	0.1
Bromochloromethane	---	0.1 U	0.5	0.1	0.1 U	0.5	0.1	0.2 U	0.2	0.06	0.1 U	0.5	0.1	0.1 U	0.5	0.1	0.1 U	0.5	0.1
Bromodichloromethane	17	0.1 U	0.5	0.1	0.1 U	0.5	0.1	0.2 U	0.2	0.05	0.1 U	0.5	0.1	0.1 U	0.5	0.1	0.1 U	0.5	0.1
Bromoform	---	0.1 U	0.5	0.1	0.1 U	0.5	0.1	0.2 U	0.2	0.06	0.1 U	0.5	0.1	0.1 UJ	0.5	0.1	0.1 U	0.5	0.1
Bromomethane	---	0.1 U	0.5	0.1	0.1 U	0.5	0.1	1.0 U	1.0	0.25	0.1 U	0.5	0.1	0.1 U	0.5	0.1	0.1 U	0.5	0.1
2-Butanone	73,000	1.0 U	5.0	1.0	1.0 U	5.0	1.0	5.0 UJ	5.0	0.81	1.0 U	5.0	1.0	1.0 U	5.0	1.0	1.0 U	5.0	1.0
n-Butylbenzene	780	0.1 U	0.5	0.1	0.1 U	0.5	0.1	0.2 U	0.2	0.02	0.1 U	0.5	0.1	0.1 U	0.5	0.1	0.1 U	0.5	0.1
sec-Butylbenzene	---	0.1 U	0.5	0.1	0.1 U	0.5	0.1	0.2 U	0.2	0.02	0.1 U	0.5	0.1	0.1 U	0.5	0.1	0.1 U	0.5	0.1
tert-Butylbenzene	---	0.1 U	0.5	0.1	0.1 U	0.5	0.1	0.2 U	0.2	0.03	0.1 U	0.5	0.1	0.1 U	0.5	0.1	0.1 U	0.5	0.1
Carbon Disulfide	3900	0.4 U	0.5	0.4	0.4 U	0.5	0.4	0.2 U	0.2	0.04	0.4 U	0.5	0.4	0.4 U	0.5	0.4	0.4 U	0.5	0.4
Carbon Tetrachloride	0.46	0.1 U	0.2	0.1	0.1 U	0.2	0.1	0.2 U	0.2	0.04	0.1 U	0.2	0.1	0.1 U	0.2	0.1	0.1 U	0.2	0.1
Chlorobenzene	270	0.1 U	0.5	0.1	0.1 U	0.5	0.1	0.2 U	0.2	0.02	0.1 U	0.5	0.1	0.1 U	0.5	0.1	0.1 U	0.5	0.1
Chloroethane	21,000	0.1 U	0.5	0.1	0.1 U	0.5	0.1	0.2 U	0.2	0.09	0.1 U	0.5	0.1	0.1 U	0.5	0.1	0.1 U	0.5	0.1
Chloroform	9.4	0.1 U	0.2	0.1	0.1 U	0.2	0.1	0.2 U	0.2	0.03	0.1 U	0.2	0.1	0.1 U	0.2	0.1	0.1 U	0.2	0.1
Chloromethane	10.3	0.2 U	0.5	0.2	0.2 U	0.5	0.2	0.5 U	0.5	0.10	0.2 U	0.5	0.2	0.2 U	0.5	0.2	0.2 U	0.5	0.2
2-Chlorotoluene	---	0.1 U	0.5	0.1	0.1 U	0.5	0.1	0.2 U	0.2	0.02	0.1 U	0.5	0.1	0.1 U	0.5	0.1	0.1 U	0.5	0.1
4-Chlorotoluene	2600	0.1 U	0.5	0.1	0.1 U	0.5	0.1	0.2 U	0.2	0.02	0.1 U	0.5	0.1	0.1 U	0.5	0.1	0.1 U	0.5	0.1
1,2-Dibromo-3-chloropropane	---	0.2 U	0.5	0.2	0.2 U	0.5	0.2	0.5 U	0.5	0.04	0.2 U	0.5	0.2	0.2 U	0.5	0.2	0.2 U	0.5	0.2
Dibromochloromethane	---	0.1 U	0.5	0.1	0.1 U	0.5	0.1	0.2 U	0.2	0.05	0.1 U	0.5	0.1	0.1 U	0.5	0.1	0.1 U	0.5	0.1
Dibromomethane	---	0.1 U	0.5	0.1	0.1 U	0.5	0.1	0.2 U	0.2	0.14	0.1 U	0.5	0.1	0.1 U	0.5	0.1	0.1 U	0.5	0.1
trans-1,4-Dichloro-2-butene	---	1.0 U	5.0	1.0	1.0 U	5.0	1.0	1.0 UJ	1.0	0.32	1.0 U	5.0	1.0	1.0 UJ	5.0	1.0	1.0 U	5.0	1.0
1,2-Dichlorobenzene	440	0.1 U	0.5	0.1	0.1 U	0.5	0.1	0.2 U	0.2	0.04	0.1 U	0.5	0.1	0.1 U	0.5	0.1	0.1 U	0.5	0.1
1,3-Dichlorobenzene	960	0.1 U	0.5	0.1	0.1 U	0.5	0.1	0.2 U	0.2	0.04	0.1 U	0.5	0.1	0.1 U	0.5	0.1	0.1 U	0.5	0.1
1,4-Dichlorobenzene	1.7	0.1 U	0.5	0.1	0.1 U	0.5	0.1	0.2 U	0.2	0.04	0.1 U	0.5	0.1	0.1 U	0.5	0.1	0.1 U	0.5	0.1
1,1-Dichloroethane	33	0.1 U	0.5	0.1	0.1 U	0.5	0.1	0.2 U	0.2	0.05	0.1 U	0.5	0.1	0.1 U	0.5	0.1	0.1 U	0.5	0.1
1,2-Dichloroethane	3.6	0.1 U	0.2	0.1	0.1 U	0.2	0.1	0.2 U	0.2	0.07	0.1 U	0.2	0.1	0.1 U	0.2	0.1	0.1 U	0.2	0.1
1,1-Dichloroethene	3.2	0.1 U	0.2	0.1	0.1 U	0.2	0.1	0.2 U	0.2	0.05	0.1 U	0.2	0.1	0.1 U	0.2	0.1	0.1 U	0.2	0.1
cis-1,2-Dichloroethene	130	0.1 U	0.2	0.1	0.1 U	0.2	0.1	0.2 U	0.2	0.04	0.1 U	0.2	0.1	0.1 U	0.2	0.1	0.1 U	0.2	0.1
trans-1,2-Dichloroethene	940	0.1 U	0.2	0.1	0.1 U	0.2	0.1	0.2 U	0.2	0.05	0.1 U	0.2	0.1	0.1 U	0.2	0.1	0.1 U	0.2	0.1
1,2-Dichloropropane	3.7	0.1 U	0.5	0.1	0.1 U	0.5	0.1	0.2 U	0.2	0.04	0.1 U	0.5	0.1	0.1 U	0.5	0.1	0.1 U	0.5	0.1
1,3-Dichloropropane	---	0.1 U	0.5	0.1	0.1 U	0.5	0.1	0.2 U	0.2	0.06	0.1 U	0.5	0.1	0.1 U	0.5	0.1	0.1 U	0.5	0.1
2,2-Dichloropropane	---	0.1 U	0.5	0.1	0.1 U	0.5	0.1	0.2 U	0.2	0.05	0.1 U	0.5	0.1	0.1 U	0.5	0.1	0.1 U	0.5	0.1
1,1-Dichloropropene	---	0.1 U	0.5	0.1	0.1 U	0.5	0.1	0.2 U	0.2	0.03	0.1 U	0.5	0.1	0.1 U	0.5	0.1	0.1 U	0.5	0.1
cis-1,3-Dichloropropene	---	0.1 U	0.2	0.1	0.1 U	0.2	0.1	0.2 U	0.2	0.06	0.1 U	0.2	0.1	0.1 U	0.2	0.1	0.1 U	0.2	0.1
trans-1,3-Dichloropropene	---	0.1 U	0.2	0.1	0.1 U	0.2	0.1	0.2 U	0.2	0.08	0.1 U	0.2	0.1	0.1 U	0.2	0.1	0.1 U	0.2	0.1
Ethylbenzene	1.7	0.1 U	0.5	0.1	0.1 U	0.5	0.1	0.2 U	0.2	0.04	0.1 U	0.5	0.1	0.1 U	0.5	0.1	0.1 U	0.5	0.1
Ethylene Dibromide	---	0.1 U	0.5	0.1	0.1 U	0.5	0.1	0.2 U	0.2	0.08	0.1 U	0.5	0.1	0.1 U	0.5	0.1	0.1 U	0.5	0.1
Hexachlorobutadiene	---	0.1 U	0.5	0.1	0.1 U	0.5	0.1	0.5 U	0.5	0.07	0.1 U	0.5	0.1	0.1 U	0.5	0.1	0.1 U	0.5	0.1
2-Hexanone	3200	1.0 U	5.0	1.0	1.0 U	5.0	1.0	5.0 U	5.0	0.90	1.0 U	5.0	1.0	1.0 U	5.0	1.0	1.0 U	5.0	1.0
Isopropylbenzene	270	0.1 U	0.5	0.1	0.1 U	0.5	0.1	0.2 U	0.2	0.02	0.1 U	0.5	0.1	0.1 U	0.5	0.1	0.1 U	0.5	0.1
4-Isopropyltoluene	---	0.1 U	0.5	0.1	0.1 U	0.5	0.1	0.2 U	0.2	0.03	0.1 U	0.5	0.1	0.1 U	0.5	0.1	0.1 U	0.5	0.1
Methyl Iodide	---	0.1 UJ	0.5	0.1	0.1 U	0.5	0.1	1.0 U	1.0	0.23	0.1 U	0.5	0.1	0.1 U	0.5	0.1	0.1 U	0.5	0.1
4-Methyl-2-Pentanone (MIBK)	19,000	1.0 U	5.0	1.0	1.0 U	5.0	1.0	5.0 U	5.0	0.97	1.0 U	5.0	1.0	1.0 U	5.0	1.0	1.0 U	5.0	1.0
Methylene Chloride	230	0.2 U	0.5	0.2	0.2 U	0.5	0.2	0.5 U	0.5	0.48	0.2 U	0.5	0.2	0.2 U	0.5	0.2	0.2 U	0.5	0.2
Naphthalene	26	0.1 U	0.5	0.1	0.1 U	0.5	0.1	0.5 U	0.5	0.12	0.1 U	0.5	0.1	0.1 U	0.5	0.1	0.1 U	0.5	0.1
n-Propylbenzene	530	0.1 U	0.5	0.1	0.1 U	0.5	0.1	0.2 U	0.2	0.02	0.1 U	0.5	0.1	0.1 U	0.5	0.1	0.1 U	0.5	0.1
Styrene	77,000	0.1 U	0.5	0.1	0.1 U	0.5	0.1	0.2 U	0.2	0.04	0.1 U	0.5	0.1	0.1 U	0.5	0.1	0.1 U	0.5	0.1
1,1,1,2-Tetrachloroethane	---	0.1 U	0.5	0.1	0.1 U	0.5	0.1	0.2 U	0.2	0.04	0.1 U	0.5	0.1	0.1 U	0.5	0.1	0.1 U	0.5	0.1
1,1,2,2-Tetrachloroethane	0.33	0.1 U	0.2	0.1	0.1 U	0.2	0.1	0.2 U	0.2	0.06	0.1 U	0.2	0.1	0.1 U	0.2	0.1	0.1 U	0.2	0.1
Tetrachloroethene	3.3	0.1 U	0.2	0.1	0.1 U	0.2	0.1	0.2 U	0.2	0.05	0.1 U	0.2	0.1	0.1 U	0.2	0.1	0.1 U	0.2	0.1
Toluene	1300	0.1 U	0.2	0.1	0.1 U	0.2	0.1	0.2 U	0.2	0.04	0.1 U	0.2	0.1	0.1 U	0.2	0.1	0.1 U	0.2	0.1
1,1,2-Trichloro-1,2,2-trifuoroethane	59,000	0.2 U	0.5	0.2	0.2 U	0.5	0.2	0.2 U	0.2	0.04	0.2 U	0.5	0.2	0.2 U	0.5	0.2	0.2 U	0.5	0.2
1,2,3-Trichlorobenzene	---	0.1 U	0.5	0.1	0.1 U	0.5	0.1	0.5 U	0.5	0.11	0.1 U	0.5	0.1	0.1 U	0.5	0.1	0.1 U	0.5	0.1

TABLE L-1
GROUNDWATER ANALYTICAL RESULTS
BOEING ISAACSON-THOMPSON
REMEDIAL INVESTIGATION

Location:		IT-PZ-3			IT-PZ-3			IT-PZ-4			IT-PZ-4			IT-PZ-4			IT-PZ-4		
Laboratory Sample ID:	Preliminary	6689146/6689147/6689148/UY55E			6787992/6787993/6787994/VJ03B			UA44B/UA44J/UA45B/UA45I/UB46B/UB46I			6574124/6574125/UL60A			6693956/6693957/6693958/UZ37E			6788057/6788058/6788059/VJ32I		
Laboratory Data Package ID:	Cleanup	1316071/UY55			1335480/VJ03			UA44/UA45/UB46			1294477/UL60			1317022/UZ37			1335483/VJ32		
Sample Date:	Levels	6/14/2012			9/11/2012			12/07/2011			03/09/2012			6/19/2012			9/12/2012		
		Result	Reporting Limit	Detection Limit	Result	Reporting Limit	Detection Limit	Result	Reporting Limit	Detection Limit	Result	Reporting Limit	Detection Limit	Result	Reporting Limit	Detection Limit	Result	Reporting Limit	Detection Limit
1,2,4-Trichlorobenzene	1.13	0.1 U	0.5	0.1	0.1 U	0.5	0.1	0.5 U	0.5	0.11	0.1 U	0.5	0.1	0.1 U	0.5	0.1	0.1 U	0.5	0.1
1,1,1-Trichloroethane	46,000	0.1 U	0.5	0.1	0.1 U	0.5	0.1	0.2 U	0.2	0.04	0.1 U	0.5	0.1	0.1 U	0.5	0.1	0.1 U	0.5	0.1
1,1,2-Trichloroethane	2.3	0.1 U	0.2	0.1	0.1 U	0.2	0.1	0.2 U	0.2	0.13	0.1 U	0.2	0.1	0.1 U	0.2	0.1	0.1 U	0.2	0.1
Trichloroethene	1.4	0.1 U	0.2	0.1	0.1 U	0.2	0.1	0.2 U	0.2	0.05	0.1 U	0.2	0.1	0.1 U	0.2	0.1	0.1 U	0.2	0.1
Trichlorofluoromethane	6900	0.1 U	0.5	0.1	0.1 U	0.5	0.1	0.2 U	0.2	0.04	0.1 U	0.5	0.1	0.1 U	0.5	0.1	0.1 U	0.5	0.1
1,2,3-Trichloropropane	---	0.3 U	1.0	0.3	0.3 U	1.0	0.3	0.5 U	0.5	0.13	0.3 U	1.0	0.3	0.3 U	1.0	0.3	0.3 U	1.0	0.3
1,2,4-Trimethylbenzene	303	0.1 U	0.5	0.1	0.1 U	0.5	0.1	0.2 U	0.2	0.02	0.1 U	0.5	0.1	0.1 U	0.5	0.1	0.1 U	0.5	0.1
1,3,5-Trimethylbenzene	303	0.1 U	0.5	0.1	0.1 U	0.5	0.1	0.2 U	0.2	0.02	0.1 U	0.5	0.1	0.1 U	0.5	0.1	0.1 U	0.5	0.1
Vinyl Acetate	---	0.2 U	0.5	0.2	0.2 U	0.5	0.2	1.0 UJ	1.0	0.07	0.2 U	0.5	0.2	0.2 U	0.5	0.2	0.2 U	0.5	0.2
Vinyl Chloride	0.53	0.1 U	0.2	0.1	0.1 U	0.2	0.1	0.2 U	0.2	0.06	0.1 U	0.2	0.1	0.1 U	0.2	0.1	0.1 U	0.2	0.1
m,p-Xylene	1300	0.1 U	0.5	0.1	0.1 U	0.5	0.1	0.4 U	0.4	0.05	0.1 U	0.5	0.1	0.1 U	0.5	0.1	0.1 U	0.5	0.1
o-Xylene	1600	0.1 U	0.5	0.1	0.1 U	0.5	0.1	0.2 U	0.2	0.04	0.1 U	0.5	0.1	0.1 U	0.5	0.1	0.1 U	0.5	0.1
2-Chloroethylvinylether	---	NA	NA	NA	NA	NA	NA	1.0 U	1.0	0.25	NA	NA	NA	NA	NA	NA	NA	NA	NA
Bromoethane	---	NA	NA	NA	NA	NA	NA	0.2 U	0.2	0.04	NA	NA	NA	NA	NA	NA	NA	NA	NA
VOLATILES (µg/L)																			
Method SW8260C-SIM																			
Tetrachloroethene	3.3	**0.023**	0.020	0.010	0.010 U	0.020	0.010	0.020 U	0.020	0.0036	0.010 U	0.020	0.010	0.010 U	0.020	0.010	0.010 U	0.020	0.010
Vinyl Chloride	0.53	**0.046**	0.020	0.010	**0.053**	0.020	0.010	**0.060**	0.020	0.0022	**0.046**	0.020	0.010	**0.051**	0.020	0.010	**0.051**	0.020	0.010
Acrylonitrile	0.057	NA	NA	NA	NA	NA	NA	0.050 U	0.050	0.0158	NA	NA	NA	NA	NA	NA	NA	NA	NA
SEMIVOLATILES (µg/L)																			
Method SW8270D																			
Acenaphthene	120	0.09 U	0.5	0.09	0.1 U	0.5	0.1	1.0 U	1.0	0.55	**0.5**	0.5	0.1	**0.6**	0.5	0.1	**0.6**	0.5	0.09
Acenaphthylene	---	0.09 U	0.5	0.09	0.1 U	0.5	0.1	1.0 U	1.0	0.48	0.1 U	0.5	0.1	0.1 U	0.5	0.1	0.09 U	0.5	0.09
Anthracene	200	0.09 U	0.5	0.09	0.1 U	0.5	0.1	1.0 U	1.0	0.53	0.1 U	0.5	0.1	0.1 U	0.5	0.1	0.09 U	0.5	0.09
Benzo(a)anthracene	0.0018	0.09 U	0.5	0.09	0.1 U	0.5	0.1	1.0 U	1.0	0.52	0.1 U	0.5	0.1	0.1 U	0.5	0.1	0.09 U	0.5	0.09
Benzo(a)pyrene	0.00018	0.09 U	0.5	0.09	0.1 U	0.5	0.1	1.0 U	1.0	0.48	0.1 U	0.5	0.1	0.1 U	0.5	0.1	0.09 U	0.5	0.09
Benzo(b)fluoranthene	0.0018	0.09 U	0.5	0.09	0.1 U	0.5	0.1	NA	NA	NA	0.1 U	0.5	0.1	0.1 U	0.5	0.1	0.09 U	0.5	0.09
Benzo(g,h,i)perylene	---	0.09 U	0.5	0.09	0.1 U	0.5	0.1	1.0 U	1.0	0.55	0.1 U	0.5	0.1	0.1 U	0.5	0.1	0.09 U	0.5	0.09
Benzo(k)fluoranthene	0.0018	0.09 U	0.5	0.09	0.1 U	0.5	0.1	NA	NA	NA	0.1 U	0.5	0.1	0.1 U	0.5	0.1	0.09 U	0.5	0.09
Total Benzofluoranthenes	0.0018	NA	NA	NA	NA	NA	NA	1.0 U	1.0	0.48	NA	NA	NA	NA	NA	NA	NA	NA	NA
Benzoic Acid	2,240	6 U	14	6	6 U	15	6	10 UJ	10	5.1	6 R	14	6	6 U	15	6	6 UJ	14	6
Benzyl Alcohol	182	5 U	14	5	5 U	15	5	5.0 U	5.0	2.0	5 U	14	5	5 U	15	5	5 U	14	5
4-Bromophenyl-phenylether	---	0.5 U	0.9	0.5	0.5 U	1	0.5	1.0 U	1.0	0.42	0.5 U	1	0.5	0.5 U	1	0.5	0.5 U	0.9	0.5
Butylbenzylphthalate	0.41	2 U	5	2	2 U	5	2	1.0 U	1.0	0.56	2 U	5	2	2 U	5	2	2 U	5	2
Di-n-Butylphthalate	47	2 U	5	2	2 U	5	2	1.0 U	1.0	0.54	2 U	5	2	2 U	5	2	2 U	5	2
Carbazole	---	0.5 U	0.9	0.5	0.5 U	1	0.5	1.0 U	1.0	0.31	0.5 U	1	0.5	0.5 U	1	0.5	0.5 U	0.9	0.5
4-Chloro-3-methylphenol	3700	0.5 U	0.9	0.5	0.5 U	1	0.5	5.0 U	5.0	2.4	0.5 U	1	0.5	0.5 U	1	0.5	0.5 UJ	0.9	0.5
4-Chloroaniline	---	0.5 U	0.9	0.5	0.5 U	1	0.5	5.0 U	5.0	2.6	0.5 U	1	0.5	0.5 U	1	0.5	0.5 U	0.9	0.5
bis(2-Chloroethoxy) Methane	---	0.5 U	0.9	0.5	0.5 U	1	0.5	1.0 U	1.0	0.56	0.5 U	1	0.5	0.5 U	1	0.5	0.5 U	0.9	0.5
Bis-(2-Chloroethyl) Ether	---	0.5 U	0.9	0.5	0.5 U	1	0.5	1.0 U	1.0	0.58	0.5 U	1	0.5	0.5 U	1	0.5	0.5 U	0.9	0.5
2-Chloronaphthalene	---	0.4 U	0.9	0.4	0.4 U	1	0.4	1.0 U	1.0	0.48	0.4 U	1	0.4	0.4 U	1	0.4	0.4 U	0.9	0.4
2-Chlorophenol	---	0.5 U	0.9	0.5	0.5 U	1	0.5	1.0 U	1.0	0.53	0.5 U	1	0.5	0.5 U	1	0.5	0.5 UJ	0.9	0.5
4-Chlorophenyl-phenylether	---	0.5 U	0.9	0.5	0.5 U	1	0.5	1.0 U	1.0	0.45	0.5 U	1	0.5	0.5 U	1	0.5	0.5 U	0.9	0.5
2,2'-Oxybis(1-Chloropropane)	---	0.5 U	0.9	0.5	0.5 U	1	0.5	1.0 U	1.0	0.62	0.5 U	1	0.5	0.5 U	1	0.5	0.5 U	0.9	0.5
Chrysene	0.018	0.09 U	0.5	0.09	0.1 U	0.5	0.1	1.0 U	1.0	0.55	0.1 U	0.5	0.1	0.1 U	0.5	0.1	0.09 U	0.5	0.09
Dibenz(a,h)anthracene	0.0018	0.09 U	0.5	0.09	0.1 U	0.5	0.1	1.0 U	1.0	0.48	0.1 U	0.5	0.1	0.1 U	0.5	0.1	0.09 U	0.5	0.09
Dibenzofuran	1.3	0.5 U	0.9	0.5	0.5 U	1	0.5	1.0 U	1.0	0.48	0.5 U	1	0.5	0.5 U	1	0.5	0.5 U	0.9	0.5
1,2-Dichlorobenzene	440	0.5 U	0.9	0.5	0.5 U	1	0.5	1.0 U	1.0	0.36	0.5 U	1	0.5	0.5 U	1	0.5	0.5 U	0.9	0.5
1,3-Dichlorobenzene	---	0.5 U	0.9	0.5	0.5 U	1	0.5	1.0 U	1.0	0.36	0.5 U	1	0.5	0.5 U	1	0.5	0.5 U	0.9	0.5
1,4-Dichlorobenzene	1.7	0.5 U	0.9	0.5	0.5 U	1	0.5	1.0 U	1.0	0.40	0.5 U	1	0.5	0.5 U	1	0.5	0.5 U	0.9	0.5
3,3'-Dichlorobenzidine	---	2 U	5	2	2 U	5	2	5.0 U	5.0	1.5	2 U	5	2	2 U	5	2	2 U	5	2
2,4-Dichlorophenol	---	0.5 U	0.9	0.5	0.5 U	1	0.5	5.0 U	5.0	2.6	0.5 U	1	0.5	0.5 U	1	0.5	0.5 UJ	0.9	0.5
Diethylphthalate	4,236	2 U	5	2	2 U	5	2	1.0 U	1.0	0.58	2 U	5	2	2 U	5	2	2 U	5	2
2,4-Dimethylphenol	660	0.5 U	0.9	0.5	0.5 U	1	0.5	1.0 U	1.0	0.36	0.5 U	1	0.5	0.5 U	1	0.5	0.5 UJ	0.9	0.5
Dimethylphthalate	1,100,000	2 U	5	2	2 U	5	2	1.0 U	1.0	0.53	2 U	5	2	2 U	5	2	2 U	5	2
4,6-Dinitro-2-Methylphenol	---	5 U	14	5	5 U	15	5	10 U	10	3.1	5 U	14	5	5 U	15	5	5 UJ	14	5
2,4-Dinitrophenol	---	9 U	28	9	10 U	30	10	10 U	10	3.5	10 U	29	10	10 U	29	10	9 UJ	28	9
2,4-Dinitrotoluene	---	0.9 U	5	0.9	1 U	5	1	5.0 U	5.0	2.5	1 U	5	1	1 U	5	1	0.9 U	5	0.9
2,6-Dinitrotoluene	---	0.5 U	0.9	0.5	0.5 U	1	0.5	5.0 U	5.0	2.4	0.5 U	1	0.5	0.5 U	1	0.5	0.5 U	0.9	0.5
bis(2-Ethylhexyl)phthalate	1.2	2 U	5	2	2 U	5	2	7.8 U	1.0	1.9	2 U	5	2	2 U	5	2	2 U	5	2

TABLE L-1
GROUNDWATER ANALYTICAL RESULTS
BOEING ISAACSON-THOMPSON
REMEDIAL INVESTIGATION

Location:		IT-PZ-3			IT-PZ-3			IT-PZ-4			IT-PZ-4			IT-PZ-4			IT-PZ-4		
Laboratory Sample ID:	Preliminary	6689146/6689147/6689148/UY55E			6787992/6787993/6787994/VJ03B			UA44B/UA44J/UA45B/UA45I/UB46B/UB46I			6574124/6574125/UL60A			6693956/6693957/6693958/UZ37E			6788057/6788058/6788059/VJ32I		
Laboratory Data Package ID:	Cleanup	1316071/UY55			1335480/VJ03			UA44/UA45/UB46			1294477/UL60			1317022/UZ37			1335483/VJ32		
Sample Date:	Levels	6/14/2012			9/11/2012			12/07/2011			03/09/2012			6/19/2012			9/12/2012		
		Result	Reporting Limit	Detection Limit	Result	Reporting Limit	Detection Limit	Result	Reporting Limit	Detection Limit	Result	Reporting Limit	Detection Limit	Result	Reporting Limit	Detection Limit	Result	Reporting Limit	Detection Limit
Fluoranthene	11	0.09 U	0.5	0.09	0.1 U	0.5	0.1	1.0 U	1.0	0.52	0.1 U	0.5	0.1	0.1 U	0.5	0.1	0.09 U	0.5	0.09
Fluorene	45	0.09 U	0.5	0.09	0.1 U	0.5	0.1	1.0 U	1.0	0.56	0.1 U	0.5	0.1	0.1 U	0.5	0.1	0.09 U	0.5	0.09
Hexachlorobenzene	---	0.09 U	0.5	0.09	0.1 U	0.5	0.1	1.0 U	1.0	0.47	0.1 U	0.5	0.1	0.1 U	0.5	0.1	0.09 U	0.5	0.09
Hexachlorobutadiene	---	0.5 U	0.9	0.5	0.5 U	1	0.5	1.0 U	1.0	0.31	0.5 U	1	0.5	0.5 U	1	0.5	0.5 U	0.9	0.5
Hexachlorocyclopentadiene	---	5 U	14	5	5 U	15	5	5.0 U	5.0	1.2	5 U	14	5	5 U	15	5	5 U	14	5
Hexachloroethane	---	0.9 U	5	0.9	1 U	5	1	1.0 U	1.0	0.35	1 U	5	1	1 U	5	1	0.9 U	5	0.9
Indeno(1,2,3-cd)pyrene	0.0018	0.09 U	0.5	0.09	0.1 U	0.5	0.1	1.0 U	1.0	0.48	0.1 U	0.5	0.1	0.1 U	0.5	0.1	0.09 U	0.5	0.09
Isophorone	---	0.5 U	0.9	0.5	0.5 U	1	0.5	1.0 U	1.0	0.48	0.5 U	1	0.5	0.5 U	1	0.5	0.5 U	0.9	0.5
1-Methylnaphthalene	2.3	0.09 U	0.5	0.09	0.1 U	0.5	0.1	1.0 U	1.0	0.48	0.1 U	0.5	0.1	0.1 U	0.5	0.1	0.09 U	0.5	0.09
2-Methylnaphthalene	64	0.09 U	0.5	0.09	0.1 U	0.5	0.1	1.0 U	1.0	0.48	0.1 U	0.5	0.1	0.1 U	0.5	0.1	0.09 U	0.5	0.09
2-Methylphenol	3100	0.5 U	0.9	0.5	0.5 U	1	0.5	1.0 U	1.0	0.53	0.5 U	1	0.5	0.5 U	1	0.5	0.5 UJ	0.9	0.5
4-Methylphenol	330	0.5 U	0.9	0.5	0.5 U	1	0.5	1.0 U	1.0	0.52	0.5 U	1	0.5	0.5 U	1	0.5	0.5 UJ	0.9	0.5
Naphthalene	26	**0.2** J1	0.5	0.09	0.1 U	0.5	0.1	1.0 U	1.0	0.52	0.1 U	0.5	0.1	**0.1** J1	0.5	0.1	0.09 U	0.5	0.09
2-Nitroaniline	---	0.5 U	0.9	0.5	0.5 U	1	0.5	5.0 U	5.0	2.6	0.5 U	1	0.5	0.5 U	1	0.5	0.5 U	0.9	0.5
3-Nitroaniline	---	0.5 U	0.9	0.5	0.5 U	1	0.5	5.0 U	5.0	2.3	0.5 U	1	0.5	0.5 U	1	0.5	0.5 U	0.9	0.5
4-Nitroaniline	---	0.5 U	0.9	0.5	0.5 U	1	0.5	5.0 U	5.0	2.2	0.5 U	1	0.5	0.5 U	1	0.5	0.5 U	0.9	0.5
Nitrobenzene	---	0.5 U	0.9	0.5	0.5 U	1	0.5	1.0 U	1.0	0.58	0.5 U	1	0.5	0.5 U	1	0.5	0.5 U	0.9	0.5
2-Nitrophenol	---	0.5 U	0.9	0.5	0.5 U	1	0.5	5.0 U	5.0	2.0	0.5 U	1	0.5	0.5 U	1	0.5	0.5 UJ	0.9	0.5
4-Nitrophenol	---	9 U	28	9	10 U	30	10	5.0 U	5.0	2.6	10 U	29	10	10 U	29	10	9 UJ	28	9
N-Nitroso-Di-N-Propylamine	---	0.5 U	0.9	0.5	0.5 U	1	0.5	1.0 U	1.0	0.56	0.5 U	1	0.5	0.5 U	1	0.5	0.5 U	0.9	0.5
N-Nitrosodiphenylamine	1.96	0.5 U	0.9	0.5	0.5 U	1	0.5	1.0 U	1.0	0.46	0.5 U	1	0.5	0.5 U	1	0.5	0.5 U	0.9	0.5
Di-n-Octyl phthalate	---	2 U	5	2	2 U	5	2	1.0 U	1.0	0.51	2 U	5	2	2 U	5	2	2 U	5	2
Pentachlorophenol	---	0.9 U	5	0.9	1 U	5	1	5.0 U	5.0	2.4	1 U	5	1	1 U	5	1	0.9 UJ	5	0.9
Phenanthrene	---	0.09 U	0.5	0.09	0.1 U	0.5	0.1	1.0 U	1.0	0.56	0.1 U	0.5	0.1	0.1 U	0.5	0.1	0.09 U	0.5	0.09
Phenol	41,000	0.5 U	0.9	0.5	0.5 U	1	0.5	1.0 U	1.0	0.52	0.5 U	1	0.5	0.5 U	1	0.5	0.5 U	0.9	0.5
Pyrene	9.8	0.09 U	0.5	0.09	0.1 U	0.5	0.1	1.0 U	1.0	0.55	0.1 U	0.5	0.1	**0.1** J1	0.5	0.1	0.09 U	0.5	0.09
1,2,4-Trichlorobenzene	1.13	0.5 U	0.9	0.5	0.5 U	1	0.5	1.0 U	1.0	0.38	0.5 U	1	0.5	0.5 U	1	0.5	0.5 U	0.9	0.5
2,4,5-Trichlorophenol	---	0.5 U	0.9	0.5	0.5 U	1	0.5	5.0 U	5.0	2.2	0.5 U	1	0.5	0.5 U	1	0.5	0.5 UJ	0.9	0.5
2,4,6-Trichlorophenol	---	0.5 U	0.9	0.5	0.5 U	1	0.5	5.0 U	5.0	2.4	0.5 U	1	0.5	0.5 U	1	0.5	0.5 UJ	0.9	0.5
cPAHs (µg/L)																			
Method SW8270D-SIM																			
Benzo(a)anthracene	0.0018	0.0050 U	0.010	0.0050	0.0047 U	0.0095	0.0047	0.010 U	0.010	0.0063	0.0048 U	0.0097	0.0048	0.0049 U	0.0098	0.0049	0.0047 U	0.0094	0.0047
Benzo(a)pyrene	0.00018	0.0050 U	0.010	0.0050	0.0047 U	0.0095	0.0047	0.010 U	0.010	0.0048	0.0048 U	0.0097	0.0048	0.0049 U	0.0098	0.0049	0.0047 U	0.0094	0.0047
Benzo(b)fluoranthene	0.0018	0.0050 U	0.010	0.0050	0.0047 U	0.0095	0.0047	NA	NA	NA	0.0048 U	0.0097	0.0048	0.0049 U	0.0098	0.0049	0.0047 U	0.0094	0.0047
Benzo(k)fluoranthene	0.0018	0.0050 U	0.010	0.0050	0.0047 U	0.0095	0.0047	NA	NA	NA	0.0048 U	0.0097	0.0048	0.0049 U	0.0098	0.0049	0.0047 U	0.0094	0.0047
Total Benzofluoranthenes	0.0018	NA	NA	NA	NA	NA	NA	0.020 UJ	0.020	0.0099	NA	NA	NA	NA	NA	NA	NA	NA	NA
Chrysene	0.018	0.0050 U	0.010	0.0050	0.0047 U	0.0095	0.0047	0.010 U	0.010	0.0046	0.0048 U	0.0097	0.0048	0.0049 U	0.0098	0.0049	0.0047 U	0.0094	0.0047
Dibenz(a,h)anthracene	0.0018	0.0040 U	0.010	0.0040	0.0038 U	0.0095	0.0038	0.010 U	0.010	0.0048	0.0039 U	0.0097	0.0039	0.0039 U	0.0098	0.0039	0.0038 U	0.0094	0.0038
Indeno(1,2,3-cd)pyrene	0.0018	0.0040 U	0.010	0.0040	0.0038 U	0.0095	0.0038	0.010 U	0.010	0.0046	0.0039 U	0.0097	0.0039	0.0039 U	0.0098	0.0039	0.0038 U	0.0094	0.0038
Pyrene	9.8	0.010 U	0.050	0.010	0.0095 U	0.047	0.0095	NA	NA	NA	0.0097 U	0.048	0.0097	0.0098 U	0.049	0.0098	0.0094 U	0.047	0.0094
cPAH TEQ	0.00018	ND	NA	NA	ND	NA	NA	ND	NA	NA	ND	NA	NA	ND	NA	NA	ND	NA	NA
PCBs (µg/L)																			
Method SW8082																			
Aroclor 1016	0.000023	0.0058 U	0.0097	0.0058	0.0057 U	0.0095	0.0057	0.010 U	0.010	0.0025	0.0057 UJ	0.0095	0.0057	0.0057 U	0.0095	0.0057	0.0059 U	0.0098	0.0059
Aroclor 1221	---	0.0058 U	0.0097	0.0058	0.0057 U	0.0095	0.0057	0.010 U	0.010	0.0028	0.0057 UJ	0.0095	0.0057	0.0057 U	0.0095	0.0057	0.0059 U	0.0098	0.0059
Aroclor 1232	---	0.0068 U	0.0097	0.0068	0.0067 U	0.0095	0.0067	0.010 U	0.010	0.0028	0.0067 UJ	0.0095	0.0067	0.0067 U	0.0095	0.0067	0.0069 U	0.0098	0.0069
Aroclor 1242	0.000023	0.0058 U	0.0097	0.0058	0.0057 U	0.0095	0.0057	0.010 U	0.010	0.0028	0.0057 UJ	0.0095	0.0057	0.0057 U	0.0095	0.0057	0.0059 U	0.0098	0.0059
Aroclor 1248	0.000023	0.0049 U	0.0097	0.0049	0.0048 U	0.0095	0.0048	0.010 U	0.010	0.0028	0.0048 UJ	0.0095	0.0048	0.0048 U	0.0095	0.0048	0.0049 U	0.0098	0.0049
Aroclor 1254	0.0000055	0.0049 U	0.0097	0.0049	0.0048 U	0.0095	0.0048	0.010 U	0.010	0.0028	0.0048 UJ	0.0095	0.0048	0.0048 U	0.0095	0.0048	0.0049 U	0.0098	0.0049
Aroclor 1260	0.000023	0.0049 U	0.0097	0.0049	0.0048 U	0.0095	0.0048	0.010 U	0.010	0.0028	0.0048 UJ	0.0095	0.0048	0.0048 U	0.0095	0.0048	0.0049 U	0.0098	0.0049
Total PCBs	0.000023	ND	NA	NA	ND	NA	NA	ND	NA	NA	ND	NA	NA	ND	NA	NA	ND	NA	NA

TABLE L-1
GROUNDWATER ANALYTICAL RESULTS
BOEING ISAACSON-THOMPSON
REMEDIAL INVESTIGATION

Location:		IT-PZ-3			IT-PZ-3			IT-PZ-4			IT-PZ-4			IT-PZ-4			IT-PZ-4		
Laboratory Sample ID:	Preliminary	6689146/6689147/6689148/UY55E			6787992/6787993/6787994/VJ03B			UA44B/UA44J/UA45B/UA45I/UB46B/UB46I			6574124/6574125/UL60A			6693956/6693957/6693958/UZ37E			6788057/6788058/6788059/VJ32I		
Laboratory Data Package ID:	Cleanup	1316071/UY55			1335480/VJ03			UA44/UA45/UB46			1294477/UL60			1317022/UZ37			1335483/VJ32		
Sample Date:	Levels	6/14/2012			9/11/2012			12/07/2011			03/09/2012			6/19/2012			9/12/2012		
		Result	Reporting Limit	Detection Limit	Result	Reporting Limit	Detection Limit	Result	Reporting Limit	Detection Limit	Result	Reporting Limit	Detection Limit	Result	Reporting Limit	Detection Limit	Result	Reporting Limit	Detection Limit
TOTAL PETROLEUM HYDROCARBONS (mg/L)																			
NWTPH-Dx																			
Diesel-Range Organics	0.5	0.029 U	0.095	0.029	0.030 U	0.099	0.030	0.10 U	0.10	0.022	0.069 U	0.25	0.069	0.029 U	0.096	0.029	0.032 U	0.110	0.032
Oil-Range Organics	0.5	0.067 U	0.240	0.067	0.069 U	0.250	0.069	0.20 U	0.20	0.044	0.99 U	3.0	0.99	0.067 U	0.240	0.067	0.075 U	0.270	0.075
NWTPH-G																			
Gasoline-Range Organics	1.0/0.8	0.05 U	0.25	0.05	0.05 U	0.25	0.05	0.25 U	0.25	0.06	0.05 U	0.25	0.05	0.05 U	0.25	0.05	0.05 U	0.25	0.05
TOTAL METALS (µg/L)																			
Method 200.8																			
Antimony	---	0.10 U	1.0	0.10	0.33 U	1.0	0.33	0.2 U	0.2	0.010	0.42 U	1.0	0.42	0.33 U	1.0	0.33	0.33 U	1.0	0.33
Arsenic	---	**4.6**	2.0	0.20	**16.2**	2.0	0.40	**24.4**	0.2	0.048	**23.6**	2.0	0.95	**24.2**	2.0	0.20	**27.7**	2.0	0.40
Barium	---	**7.5**	2.0	0.41	**10.7**	2.0	0.41	**40.9**	0.5	0.020	**32.2**	2.0	0.69	**35.8**	2.0	0.41	**37.0**	2.0	0.41
Beryllium	---	0.025 U	0.50	0.025	**0.031** J1	0.50	0.025	0.2 U	0.2	0.021	0.13 U	0.50	0.13	0.025 U	0.50	0.025	0.025 U	0.50	0.025
Cadmium	---	0.048 U	0.50	0.048	0.082 U	0.50	0.082	0.1 U	0.1	0.010	0.20 U	0.50	0.20	0.048 U	0.50	0.048	0.082 U	0.50	0.082
Chromium	---	**0.69** J1	2.0	0.10	**1.4** J1	2.0	0.50	2 U	2	0.22	**0.82** J1	2.0	0.60	**0.74** J1	2.0	0.50	**0.86** J1	2.0	0.50
Copper	---	**0.35** J1	2.0	0.15	**0.58** J1	2.0	0.40	0.5 U	0.5	0.158	0.38 U	2.0	0.38	0.15 U	2.0	0.15	0.40 U	2.0	0.40
Lead	---	**0.052** J1	1.0	0.034	0.12 UJ2	1.0	0.034	0.1 U	0.1	0.046	0.080 U	1.0	0.080	0.034 U	1.0	0.034	0.034 U	1.0	0.034
Nickel	---	**0.80** J1	2.0	0.13	**1.1** J1	2.0	0.35	**1.0**	0.5	0.079	**0.61** J1	2.0	0.50	**1.2** J1	2.0	0.13	**1.1** J1	2.0	0.35
Selenium	---	0.18 U	2.0	0.18	0.50 U	2.0	0.50	0.5 U	0.5	0.127	0.27 U	2.0	0.27	0.18 U	2.0	0.18	0.50 U	2.0	0.50
Silver	---	0.046 U	0.50	0.046	0.10 U	0.50	0.10	0.2 UJ	0.2	0.008	0.098 U	0.50	0.098	0.10 U	0.50	0.10	0.10 U	0.50	0.10
Thallium	---	0.029 U	0.50	0.029	0.15 U	0.50	0.15	0.2 U	0.2	0.004	0.15 U	0.50	0.15	0.029 U	0.50	0.029	0.15 U	0.50	0.15
Zinc	---	**4.6** J1	15.0	1.1	**8.3** J1	15.0	1.1	4 U	4	0.50	4.0 U	15.0	4.0	1.1 U	15.0	1.1	1.1 U	15.0	1.1
Method SW7196A (mg/L)																			
Chromium VI	0.00058	0.010 U	0.010	0.00300	0.010 U	0.010	0.00300	0.010 U	0.010	0.00300	0.010 U	0.010	0.00300	0.010 U	0.010	0.00300	0.010 U	0.010	0.00300
Method SW7470A/EPA 1631E (ng/L)																			
Mercury	12	**0.744**	0.500	0.160	**1.95** J1	5.00	1.60	20.0 U	20.0	2.60	1.60 U	5.00	1.60	**0.449** J1	0.500	0.160	**0.560**	0.500	0.160
DISSOLVED METALS (µg/L)																			
Methods 200.8/SW7196A																			
Antimony	150	0.10 U	1.0	0.10	0.33 U	1.0	0.33	0.2 U	0.2	0.010	0.42 U	1.0	0.42	0.33 U	1.0	0.33	0.33 U	1.0	0.33
Arsenic	8	**4.2**	2.0	0.20	**14.4**	2.0	0.40	**22.2**	0.5	0.120	**24.4**	2.0	0.95	**22.0**	2.0	0.20	**26.2**	2.0	0.40
Barium	770	**7.1**	2.0	0.41	**10.8**	2.0	0.41	**39.6**	0.5	0.020	**34.0**	2.0	0.69	**35.8**	2.0	0.41	**35.6**	2.0	0.41
Beryllium	12	0.025 U	0.50	0.025	**0.041** J1	0.50	0.025	0.2 U	0.2	0.021	0.13 U	0.50	0.13	0.025 U	0.50	0.025	0.025 U	0.50	0.025
Cadmium	0.25	0.048 U	0.50	0.048	0.082 U	0.50	0.082	0.1 U	0.1	0.010	0.20 U	0.50	0.20	0.048 U	0.50	0.048	0.082 U	0.50	0.082
Chromium	74	**0.60** J1	2.0	0.10	**1.6** J1	2.0	0.50	1 U	1	0.11	**0.89** J1	2.0	0.60	**0.79** J1	2.0	0.50	**1.0** J1	2.0	0.50
Copper	8	0.15 U	2.0	0.15	**0.72** J1	2.0	0.40	0.5 U	0.5	0.158	0.38 U	2.0	0.38	0.15 U	2.0	0.15	0.40 U	2.0	0.40
Lead	2.5	0.034 U	1.0	0.034	0.044 UJ2	1.0	0.034	0.1 U	0.1	0.046	0.080 U	1.0	0.080	0.034 U	1.0	0.034	0.034 U	1.0	0.034
Nickel	8.2	**0.71** J1	2.0	0.13	**1.7** J1	2.0	0.35	**0.8**	0.5	0.079	**0.77** J1	2.0	0.50	**1.1** J1	2.0	0.13	**0.72** J1	2.0	0.35
Selenium	5	0.18 U	2.0	0.18	0.50 U	2.0	0.50	0.5 U	0.5	0.127	0.27 U	2.0	0.27	0.18 U	2.0	0.18	0.50 U	2.0	0.50
Silver	22	0.046 U	0.50	0.046	0.10 U	0.50	0.10	0.2 UJ	0.2	0.008	0.098 U	0.50	0.098	0.10 U	0.50	0.10	0.10 U	0.50	0.10
Thallium	0.47	0.029 U	0.50	0.029	0.15 U	0.50	0.15	0.2 U	0.2	0.004	0.15 U	0.50	0.15	0.029 U	0.50	0.029	0.15 U	0.50	0.15
Zinc	56	**1.1** J1	15.0	1.1	3.4 UJ2	15.0	1.1	4 U	4	0.50	4.0 U	15.0	4.0	1.1 U	15.0	1.1	**1.7** J1	15.0	1.1
Method SW7470A/EPA 1631E (ng/L)																			
Mercury	12	**1.15**	0.500	0.160	**2.27** J1	5.00	1.60	20.0 U	20.0	2.60	**1.66** J1	5.00	1.60	**2.07** J1	5.00	1.60	**1.62** J1	5.00	1.60
CONVENTIONALS (mg/L)																			
Chloride (Method 300.0)	---	**1.2**	0.40	0.20	**2.6**	0.40	0.20	NA	NA	NA	NA	NA	NA	**85.4**	8.0	4.0	**110**	20.0	10.0
Nitrate (Method 300.0)	---	0.050 U	0.10	0.050	0.050 U	0.10	0.050	0.1 U	0.1	0.007	0.050 U	0.10	0.050	0.25 U	0.50	0.25	0.050 U	0.10	0.050
Sulfate (Method 300.0)	---	0.30 U	1.0	0.30	**0.36** J1	1.0	0.30	0.1 U	0.1	0.059	0.30 U	1.0	0.30	**0.65** J1	1.0	0.30	0.30 U	1.0	0.30
Total Dissolved Solids (Method 160.1)	---	**188**	30.0	9.7	**338**	30.0	9.7	**435**	10.0	10.0	**443**	60.0	19.4	**519** J	60.0	19.4	**444**	60.0	19.4
FIELD PARAMETERS																			
Temperature (°C)	---	14.06	NA	NA	17.55	NA	NA	14.07	NA	NA	12.88	NA	NA	13.45	NA	NA	14.90	NA	NA
Conductivity (uS/cm)	---	177	NA	NA	315	NA	NA	492	NA	NA	937	NA	NA	728	NA	NA	640	NA	NA
Dissolved Oxygen (mg/L)	---	0.40	NA	NA	5.86	NA	NA	0.86	NA	NA	0.50	NA	NA	0.34	NA	NA	0.30	NA	NA
pH (SU)	---	5.98	NA	NA	6.67	NA	NA	6.72	NA	NA	8.07	NA	NA	NA	NA	NA	7.35	NA	NA
ORP (mV)	---	8.5	NA	NA	-170	NA	NA	-34.1	NA	NA	-100.0	NA	NA	-134.9	NA	NA	-78.5	NA	NA
Turbidity (NTU)	---	17.32	NA	NA	58.2	NA	NA	1.31	NA	NA	5.79	NA	NA	1.34	NA	NA	9.73	NA	NA
Ferrous Iron (mg/L)	---	1.6	NA	NA	5.6	NA	NA	NA	NA	NA	1.6	NA	NA	4.4	NA	NA	0.0	NA	NA

TABLE L-1
GROUNDWATER ANALYTICAL RESULTS
BOEING ISAACSON-THOMPSON
REMEDIAL INVESTIGATION

Location:		IT-PZ-6			IT-PZ-6			IT-PZ-6			IT-PZ-6			IT-PZ-7			IT-PZ-7		
Laboratory Sample ID:	Preliminary	UA54A/UA54J/UA55A/UA55I/UB47A/UB47I			6571477/6571478/UL18G			6689149/6689150/6689151/UY55F			6788004/6788005/6788006/VJ03F			UA44E/UA44M/UA45E/UA45L/UB46E/UB46L			6578921/6578922/UM31D		
Laboratory Data Package ID:	Cleanup	UA54/UA55/UB47			1293989/UL18			1316071/UY55			1335480/VJ03			UA44/UA45/UB46			1295418/UM31		
Sample Date:	Levels	12/08/2011			03/07/2012			6/14/2012			9/11/2012			12/07/2011			3/13/2012		
		Result	Reporting Limit	Detection Limit	Result	Reporting Limit	Detection Limit	Result	Reporting Limit	Detection Limit	Result	Reporting Limit	Detection Limit	Result	Reporting Limit	Detection Limit	Result	Reporting Limit	Detection Limit
VOLATILES (µg/L)																			
Method SW8260C																			
Acetone	110,000	5.0 U	5.0	2.1	3.0 U	5.0	3.0	3.0 U	5.0	3.0	3.0 U	5.0	3.0	5.0 U	5.0	2.1	3.0 U	5.0	3.0
Acrolein	---	5.0 UJ	5.0	2.5	5.0 U	25	5.0	5.0 U	25	5.0	5.0 U	25	5.0	5.0 UJ	5.0	2.5	5.0 U	25	5.0
Acrylonitrile	0.057	1.0 U	1.0	0.60	1.0 U	5.0	1.0	1.0 U	5.0	1.0	1.0 U	5.0	1.0	1.0 U	1.0	0.60	1.0 U	5.0	1.0
Benzene	2	0.2 U	0.2	0.03	0.1 U	0.2	0.1	**0.1** J1	0.2	0.1	**0.1** J1	0.2	0.1	0.2 U	0.2	0.03	0.1 U	0.2	0.1
Bromobenzene	---	0.2 U	0.2	0.06	0.1 U	0.5	0.1	0.1 U	0.5	0.1	0.1 U	0.5	0.1	0.2 U	0.2	0.06	0.1 U	0.5	0.1
Bromochloromethane	---	0.2 U	0.2	0.06	0.1 U	0.5	0.1	0.1 U	0.5	0.1	0.1 U	0.5	0.1	0.2 U	0.2	0.06	0.1 U	0.5	0.1
Bromodichloromethane	17	0.2 U	0.2	0.05	0.1 U	0.5	0.1	0.1 U	0.5	0.1	0.1 U	0.5	0.1	0.2 U	0.2	0.05	0.1 U	0.5	0.1
Bromoform	---	0.2 U	0.2	0.06	0.1 U	0.5	0.1	0.1 U	0.5	0.1	0.1 U	0.5	0.1	0.2 U	0.2	0.06	0.1 U	0.5	0.1
Bromomethane	---	1.0 U	1.0	0.25	0.1 U	0.5	0.1	0.1 U	0.5	0.1	0.1 U	0.5	0.1	1.0 U	1.0	0.25	0.1 U	0.5	0.1
2-Butanone	73,000	5.0 UJ	5.0	0.81	1.0 U	5.0	1.0	1.0 U	5.0	1.0	1.0 U	5.0	1.0	5.0 UJ	5.0	0.81	1.0 U	5.0	1.0
n-Butylbenzene	780	0.2 U	0.2	0.02	0.1 U	0.5	0.1	0.1 U	0.5	0.1	0.1 U	0.5	0.1	0.2 U	0.2	0.02	0.1 U	0.5	0.1
sec-Butylbenzene	---	0.2 U	0.2	0.02	0.1 U	0.5	0.1	0.1 U	0.5	0.1	0.1 U	0.5	0.1	0.2 U	0.2	0.02	0.1 U	0.5	0.1
tert-Butylbenzene	---	0.2 U	0.2	0.03	0.1 U	0.5	0.1	0.1 U	0.5	0.1	0.1 U	0.5	0.1	0.2 U	0.2	0.03	0.1 U	0.5	0.1
Carbon Disulfide	3900	0.2 U	0.2	0.04	0.4 U	0.5	0.4	0.4 U	0.5	0.4	0.4 U	0.5	0.4	0.2 U	0.2	0.04	0.4 U	0.5	0.4
Carbon Tetrachloride	0.46	0.2 U	0.2	0.04	0.1 U	0.2	0.1	0.1 U	0.2	0.1	0.1 U	0.2	0.1	0.2 U	0.2	0.04	0.1 U	0.2	0.1
Chlorobenzene	270	0.2 U	0.2	0.02	0.1 U	0.5	0.1	0.1 U	0.5	0.1	0.1 U	0.5	0.1	0.2 U	0.2	0.02	0.1 U	0.5	0.1
Chloroethane	21,000	0.2 U	0.2	0.09	0.1 U	0.5	0.1	0.1 U	0.5	0.1	0.1 U	0.5	0.1	0.2 U	0.2	0.09	0.1 U	0.5	0.1
Chloroform	9.4	0.2 U	0.2	0.03	0.1 U	0.2	0.1	0.1 U	0.2	0.1	0.1 U	0.2	0.1	0.2 U	0.2	0.03	0.1 U	0.2	0.1
Chloromethane	10.3	0.5 U	0.5	0.10	0.2 U	0.5	0.2	0.2 U	0.5	0.2	0.2 U	0.5	0.2	0.5 U	0.5	0.10	0.2 U	0.5	0.2
2-Chlorotoluene	---	0.2 U	0.2	0.02	0.1 U	0.5	0.1	0.1 U	0.5	0.1	0.1 U	0.5	0.1	0.2 U	0.2	0.02	0.1 U	0.5	0.1
4-Chlorotoluene	2600	0.2 U	0.2	0.02	0.1 U	0.5	0.1	0.1 U	0.5	0.1	0.1 U	0.5	0.1	0.2 U	0.2	0.02	0.1 U	0.5	0.1
1,2-Dibromo-3-chloropropane	---	0.5 U	0.5	0.04	0.2 U	0.5	0.2	0.2 U	0.5	0.2	0.2 U	0.5	0.2	0.5 U	0.5	0.04	0.2 U	0.5	0.2
Dibromochloromethane	---	0.2 U	0.2	0.05	0.1 U	0.5	0.1	0.1 U	0.5	0.1	0.1 U	0.5	0.1	0.2 U	0.2	0.05	0.1 U	0.5	0.1
Dibromomethane	---	0.2 U	0.2	0.14	0.1 U	0.5	0.1	0.1 U	0.5	0.1	0.1 U	0.5	0.1	0.2 U	0.2	0.14	0.1 U	0.5	0.1
trans-1,4-Dichloro-2-butene	---	1.0 UJ	1.0	0.32	1.0 U	5.0	1.0	1.0 U	5.0	1.0	1.0 U	5.0	1.0	1.0 UJ	1.0	0.32	1.0 U	5.0	1.0
1,2-Dichlorobenzene	440	0.2 U	0.2	0.04	0.1 U	0.5	0.1	**0.2** J1	0.5	0.1	**0.2** J1	0.5	0.1	0.2 U	0.2	0.04	0.1 U	0.5	0.1
1,3-Dichlorobenzene	960	0.2 U	0.2	0.04	0.1 U	0.5	0.1	0.1 U	0.5	0.1	0.1 U	0.5	0.1	0.2 U	0.2	0.04	0.1 U	0.5	0.1
1,4-Dichlorobenzene	1.7	0.2 U	0.2	0.04	0.1 U	0.5	0.1	0.1 U	0.5	0.1	0.1 U	0.5	0.1	0.2 U	0.2	0.04	0.1 U	0.5	0.1
1,1-Dichloroethane	33	0.2 U	0.2	0.05	0.1 U	0.5	0.1	0.1 U	0.5	0.1	0.1 U	0.5	0.1	0.2 U	0.2	0.05	0.1 U	0.5	0.1
1,2-Dichloroethane	3.6	0.2 U	0.2	0.07	0.1 U	0.2	0.1	0.1 U	0.2	0.1	0.1 U	0.2	0.1	0.2 U	0.2	0.07	0.1 U	0.2	0.1
1,1-Dichloroethene	3.2	0.2 U	0.2	0.05	0.1 U	0.2	0.1	0.1 U	0.2	0.1	0.1 U	0.2	0.1	0.2 U	0.2	0.05	0.1 U	0.2	0.1
cis-1,2-Dichloroethene	130	0.2 U	0.2	0.04	0.1 U	0.2	0.1	**0.1** J1	0.2	0.1	0.1 U	0.2	0.1	0.2 U	0.2	0.04	0.1 U	0.2	0.1
trans-1,2-Dichloroethene	940	0.2 U	0.2	0.05	0.1 U	0.2	0.1	0.1 U	0.2	0.1	0.1 U	0.2	0.1	0.2 U	0.2	0.05	0.1 U	0.2	0.1
1,2-Dichloropropane	3.7	0.2 U	0.2	0.04	0.1 U	0.5	0.1	0.1 U	0.5	0.1	0.1 U	0.5	0.1	0.2 U	0.2	0.04	0.1 U	0.5	0.1
1,3-Dichloropropane	---	0.2 U	0.2	0.06	0.1 U	0.5	0.1	0.1 U	0.5	0.1	0.1 U	0.5	0.1	0.2 U	0.2	0.06	0.1 U	0.5	0.1
2,2-Dichloropropane	---	0.2 U	0.2	0.05	0.1 U	0.5	0.1	0.1 U	0.5	0.1	0.1 U	0.5	0.1	0.2 U	0.2	0.05	0.1 U	0.5	0.1
1,1-Dichloropropene	---	0.2 U	0.2	0.03	0.1 U	0.5	0.1	0.1 U	0.5	0.1	0.1 U	0.5	0.1	0.2 U	0.2	0.03	0.1 U	0.5	0.1
cis-1,3-Dichloropropene	---	0.2 U	0.2	0.06	0.1 U	0.2	0.1	0.1 U	0.2	0.1	0.1 U	0.2	0.1	0.2 U	0.2	0.06	0.1 U	0.2	0.1
trans-1,3-Dichloropropene	---	0.2 U	0.2	0.08	0.1 U	0.2	0.1	0.1 U	0.2	0.1	0.1 U	0.2	0.1	0.2 U	0.2	0.08	0.1 U	0.2	0.1
Ethylbenzene	1.7	0.2 U	0.2	0.04	0.1 U	0.5	0.1	0.1 U	0.5	0.1	0.1 U	0.5	0.1	0.2 U	0.2	0.04	0.1 U	0.5	0.1
Ethylene Dibromide	---	0.2 U	0.2	0.08	0.1 U	0.5	0.1	0.1 U	0.5	0.1	0.1 U	0.5	0.1	0.2 U	0.2	0.08	0.1 U	0.5	0.1
Hexachlorobutadiene	---	0.5 U	0.5	0.07	0.1 U	0.5	0.1	0.1 U	0.5	0.1	0.1 U	0.5	0.1	0.5 U	0.5	0.07	0.1 U	0.5	0.1
2-Hexanone	3200	5.0 U	5.0	0.90	1.0 U	5.0	1.0	1.0 U	5.0	1.0	1.0 U	5.0	1.0	5.0 U	5.0	0.90	1.0 U	5.0	1.0
Isopropylbenzene	270	0.2 U	0.2	0.02	0.1 U	0.5	0.1	0.1 U	0.5	0.1	0.1 U	0.5	0.1	0.2 U	0.2	0.02	0.1 U	0.5	0.1
4-Isopropyltoluene	---	0.2 U	0.2	0.03	0.1 U	0.5	0.1	0.1 U	0.5	0.1	0.1 U	0.5	0.1	0.2 U	0.2	0.03	0.1 U	0.5	0.1
Methyl Iodide	---	1.0 U	1.0	0.23	0.1 U	0.5	0.1	0.1 UJ	0.5	0.1	0.1 U	0.5	0.1	1.0 U	1.0	0.23	0.1 U	0.5	0.1
4-Methyl-2-Pentanone (MIBK)	19,000	5.0 U	5.0	0.97	1.0 U	5.0	1.0	1.0 U	5.0	1.0	1.0 U	5.0	1.0	5.0 U	5.0	0.97	1.0 U	5.0	1.0
Methylene Chloride	230	0.5 U	0.5	0.48	0.2 U	0.5	0.2	0.2 U	0.5	0.2	0.2 U	0.5	0.2	0.5 U	0.5	0.48	0.2 U	0.5	0.2
Naphthalene	26	0.5 U	0.5	0.12	0.1 U	0.5	0.1	**0.1** J1	0.5	0.1	**0.1** J1	0.5	0.1	0.5 U	0.5	0.12	0.1 U	0.5	0.1
n-Propylbenzene	530	0.2 U	0.2	0.02	0.1 U	0.5	0.1	0.1 U	0.5	0.1	0.1 U	0.5	0.1	0.2 U	0.2	0.02	0.1 U	0.5	0.1
Styrene	77,000	0.2 U	0.2	0.04	0.1 U	0.5	0.1	0.1 U	0.5	0.1	0.1 U	0.5	0.1	0.2 U	0.2	0.04	0.1 U	0.5	0.1
1,1,1,2-Tetrachloroethane	---	0.2 U	0.2	0.04	0.1 U	0.5	0.1	0.1 U	0.5	0.1	0.1 U	0.5	0.1	0.2 U	0.2	0.04	0.1 U	0.5	0.1
1,1,2,2-Tetrachloroethane	0.33	0.2 U	0.2	0.06	0.1 U	0.2	0.1	0.1 U	0.2	0.1	0.1 U	0.2	0.1	0.2 U	0.2	0.06	0.1 U	0.2	0.1
Tetrachloroethene	3.3	0.2 U	0.2	0.05	0.1 U	0.2	0.1	0.1 U	0.2	0.1	0.1 U	0.2	0.1	0.2 U	0.2	0.05	0.1 U	0.2	0.1
Toluene	1300	0.2 U	0.2	0.04	0.1 U	0.2	0.1	0.1 U	0.2	0.1	0.1 U	0.2	0.1	0.2 U	0.2	0.04	0.1 U	0.2	0.1
1,1,2-Trichloro-1,2,2-trifuoroethane	59,000	0.2 U	0.2	0.04	0.2 U	0.5	0.2	0.2 U	0.5	0.2	0.2 U	0.5	0.2	0.2 U	0.2	0.04	0.2 U	0.5	0.2
1,2,3-Trichlorobenzene	---	0.5 U	0.5	0.11	0.1 U	0.5	0.1	0.1 U	0.5	0.1	0.1 U	0.5	0.1	0.5 U	0.5	0.11	0.1 U	0.5	0.1

TABLE L-1
GROUNDWATER ANALYTICAL RESULTS
BOEING ISAACSON-THOMPSON
REMEDIAL INVESTIGATION

Location:		IT-PZ-6			IT-PZ-6			IT-PZ-6			IT-PZ-6			IT-PZ-7			IT-PZ-7		
Laboratory Sample ID:	Preliminary	UA54A/UA54J/UA55A/UA55I/UB47A/UB47I			6571477/6571478/UL18G			6689149/6689150/6689151/UY55F			6788004/6788005/6788006/VJ03F			UA44E/UA44M/UA45E/UA45L/UB46E/UB46L			6578921/6578922/UM31D		
Laboratory Data Package ID:	Cleanup	UA54/UA55/UB47			1293989/UL18			1316071/UY55			1335480/VJ03			UA44/UA45/UB46			1295418/UM31		
Sample Date:	Levels	12/08/2011			03/07/2012			6/14/2012			9/11/2012			12/07/2011			3/13/2012		
		Result	Reporting Limit	Detection Limit	Result	Reporting Limit	Detection Limit	Result	Reporting Limit	Detection Limit	Result	Reporting Limit	Detection Limit	Result	Reporting Limit	Detection Limit	Result	Reporting Limit	Detection Limit
1,2,4-Trichlorobenzene	1.13	0.5 U	0.5	0.11	0.1 U	0.5	0.1	0.1 U	0.5	0.1	0.1 U	0.5	0.1	0.5 U	0.5	0.11	0.1 U	0.5	0.1
1,1,1-Trichloroethane	46,000	0.2 U	0.2	0.04	0.1 U	0.5	0.1	0.1 U	0.5	0.1	0.1 U	0.5	0.1	0.2 U	0.2	0.04	0.1 U	0.5	0.1
1,1,2-Trichloroethane	2.3	0.2 U	0.2	0.13	0.1 U	0.2	0.1	0.1 U	0.2	0.1	0.1 U	0.2	0.1	0.2 U	0.2	0.13	0.1 U	0.2	0.1
Trichloroethene	1.4	0.2 U	0.2	0.05	0.1 U	0.2	0.1	0.1 U	0.2	0.1	0.1 U	0.2	0.1	0.2 U	0.2	0.05	0.1 U	0.2	0.1
Trichlorofluoromethane	6900	0.2 U	0.2	0.04	0.1 U	0.5	0.1	0.1 U	0.5	0.1	0.1 U	0.5	0.1	0.2 U	0.2	0.04	0.1 U	0.5	0.1
1,2,3-Trichloropropane	---	0.5 U	0.5	0.13	0.3 U	1.0	0.3	0.3 U	1.0	0.3	0.3 U	1.0	0.3	0.5 U	0.5	0.13	0.3 U	1.0	0.3
1,2,4-Trimethylbenzene	303	0.2 U	0.2	0.02	0.1 U	0.5	0.1	**0.2** J1	0.5	0.1	0.1 J	0.5	0.1	0.2 U	0.2	0.02	0.1 U	0.5	0.1
1,3,5-Trimethylbenzene	303	0.2 U	0.2	0.02	0.1 U	0.5	0.1	0.1 U	0.5	0.1	0.1 U	0.5	0.1	0.2 U	0.2	0.02	0.1 U	0.5	0.1
Vinyl Acetate	---	1.0 UJ	1.0	0.07	0.2 U	0.5	0.2	0.2 U	0.5	0.2	0.2 U	0.5	0.2	1.0 UJ	1.0	0.07	0.2 U	0.5	0.2
Vinyl Chloride	0.53	0.2 U	0.2	0.06	0.1 U	0.2	0.1	0.1 U	0.2	0.1	0.1 U	0.2	0.1	0.2 U	0.2	0.06	0.1 U	0.2	0.1
m,p-Xylene	1300	0.4 U	0.4	0.05	0.1 U	0.5	0.1	0.1 U	0.5	0.1	0.1 U	0.5	0.1	0.4 U	0.4	0.05	0.1 U	0.5	0.1
o-Xylene	1600	0.2 U	0.2	0.04	0.1 U	0.5	0.1	0.1 U	0.5	0.1	0.1 U	0.5	0.1	0.2 U	0.2	0.04	0.1 U	0.5	0.1
2-Chloroethylvinylether	---	1.0 U	1.0	0.25	NA	NA	NA	NA	NA	NA	NA	NA	NA	1.0 U	1.0	0.25	NA	NA	NA
Bromoethane	---	0.2 U	0.2	0.04	NA	NA	NA	NA	NA	NA	NA	NA	NA	0.2 U	0.2	0.04	NA	NA	NA
VOLATILES (µg/L)																			
Method SW8260C-SIM																			
Tetrachloroethene	3.3	0.020 U	0.020	0.0036	0.010 U	0.020	0.010	**0.017** J1	0.020	0.010	0.010 U	0.020	0.010	0.020 U	0.020	0.0036	0.010 U	0.020	0.010
Vinyl Chloride	0.53	0.020 U	0.020	0.0022	**0.019** J1	0.020	0.010	**0.014** J1	0.020	0.010	**0.013** J1	0.020	0.010	0.020 U	0.020	0.0022	0.010 U	0.020	0.010
Acrylonitrile	0.057	0.050 U	0.050	0.0158	NA	NA	NA	NA	NA	NA	NA	NA	NA	0.050 U	0.050	0.0158	NA	NA	NA
SEMIVOLATILES (µg/L)																			
Method SW8270D																			
Acenaphthene	120	1.2 U	1.2	0.64	0.09 U	0.5	0.09	0.1 U	0.5	0.1	0.1 U	0.5	0.1	1.0 U	1.0	0.55	0.09 U	0.5	0.09
Acenaphthylene	---	1.2 U	1.2	0.56	0.09 U	0.5	0.09	0.1 U	0.5	0.1	0.1 U	0.5	0.1	1.0 U	1.0	0.48	0.09 U	0.5	0.09
Anthracene	200	1.2 U	1.2	0.62	0.09 U	0.5	0.09	0.1 U	0.5	0.1	0.1 U	0.5	0.1	1.0 U	1.0	0.53	0.09 U	0.5	0.09
Benzo(a)anthracene	0.0018	1.2 U	1.2	0.61	0.09 U	0.5	0.09	0.1 U	0.5	0.1	0.1 U	0.5	0.1	1.0 U	1.0	0.52	0.09 U	0.5	0.09
Benzo(a)pyrene	0.00018	1.2 U	1.2	0.57	0.09 U	0.5	0.09	0.1 U	0.5	0.1	0.1 U	0.5	0.1	1.0 U	1.0	0.48	0.09 U	0.5	0.09
Benzo(b)fluoranthene	0.0018	NA	NA	NA	0.09 U	0.5	0.09	0.1 U	0.5	0.1	0.1 U	0.5	0.1	NA	NA	NA	0.09 U	0.5	0.09
Benzo(g,h,i)perylene	---	1.2 U	1.2	0.64	0.09 U	0.5	0.09	0.1 U	0.5	0.1	0.1 U	0.5	0.1	1.0 U	1.0	0.55	0.09 U	0.5	0.09
Benzo(k)fluoranthene	0.0018	NA	NA	NA	0.09 U	0.5	0.09	0.1 U	0.5	0.1	0.1 U	0.5	0.1	NA	NA	NA	0.09 U	0.5	0.09
Total Benzofluoranthenes	0.0018	1.2 U	1.2	0.57	NA	NA	NA	NA	NA	NA	NA	NA	NA	1.0 U	1.0	0.48	NA	NA	NA
Benzoic Acid	2,240	12 U	12	6.0	6 UJ	14	6	6 U	15	6	6 U	15	6	10 U	10	5.1	6 UJ	16	6
Benzyl Alcohol	182	5.9 U	5.9	2.4	5 U	14	5	5 U	15	5	5 U	15	5	5.0 U	5.0	2.0	5 U	16	5
4-Bromophenyl-phenylether	---	1.2 U	1.2	0.50	0.5 U	1	0.5	0.5 U	1	0.5	0.5 U	1	0.5	1.0 U	1.0	0.42	0.5 U	1	0.5
Butylbenzylphthalate	0.41	1.2 U	1.2	0.66	2 U	5	2	2 U	5	2	2 U	5	2	1.0 U	1.0	0.56	2 U	5	2
Di-n-Butylphthalate	47	1.2 U	1.2	0.63	2 U	5	2	2 U	5	2	2 U	5	2	1.0 U	1.0	0.54	2 U	5	2
Carbazole	---	1.2 U	1.2	0.36	0.5 U	1	0.5	0.5 U	1	0.5	0.5 U	1	0.5	1.0 U	1.0	0.31	0.5 U	1	0.5
4-Chloro-3-methylphenol	3700	5.9 U	5.9	2.8	0.5 U	1	0.5	0.5 U	1	0.5	0.5 U	1	0.5	5.0 U	5.0	2.4	0.5 U	1	0.5
4-Chloroaniline	---	5.9 U	5.9	3.1	0.5 U	1	0.5	0.5 U	1	0.5	0.5 U	1	0.5	5.0 U	5.0	2.6	0.5 U	1	0.5
bis(2-Chloroethoxy) Methane	---	1.2 U	1.2	0.66	0.5 U	1	0.5	0.5 U	1	0.5	0.5 U	1	0.5	1.0 U	1.0	0.56	0.5 U	1	0.5
Bis-(2-Chloroethyl) Ether	---	1.2 U	1.2	0.69	0.5 U	1	0.5	0.5 U	1	0.5	0.5 U	1	0.5	1.0 U	1.0	0.58	0.5 U	1	0.5
2-Chloronaphthalene	---	1.2 U	1.2	0.56	0.4 U	1	0.4	0.4 U	1	0.4	0.4 U	1	0.4	1.0 U	1.0	0.48	0.4 U	1	0.4
2-Chlorophenol	---	1.2 U	1.2	0.62	0.5 U	1	0.5	0.5 U	1	0.5	0.5 U	1	0.5	1.0 U	1.0	0.53	0.5 U	1	0.5
4-Chlorophenyl-phenylether	---	1.2 U	1.2	0.53	0.5 U	1	0.5	0.5 U	1	0.5	0.5 U	1	0.5	1.0 U	1.0	0.45	0.5 U	1	0.5
2,2'-Oxybis(1-Chloropropane)	---	1.2 U	1.2	0.73	0.5 U	1	0.5	0.5 U	1	0.5	0.5 U	1	0.5	1.0 U	1.0	0.62	0.5 U	1	0.5
Chrysene	0.018	1.2 U	1.2	0.65	0.09 U	0.5	0.09	0.1 U	0.5	0.1	0.1 U	0.5	0.1	1.0 U	1.0	0.55	0.09 U	0.5	0.09
Dibenz(a,h)anthracene	0.0018	1.2 U	1.2	0.57	0.09 U	0.5	0.09	0.1 U	0.5	0.1	0.1 U	0.5	0.1	1.0 U	1.0	0.48	0.09 U	0.5	0.09
Dibenzofuran	1.3	1.2 U	1.2	0.56	0.5 U	1	0.5	0.5 U	1	0.5	0.5 U	1	0.5	1.0 U	1.0	0.48	0.5 U	1	0.5
1,2-Dichlorobenzene	440	1.2 U	1.2	0.43	0.5 U	1	0.5	0.5 U	1	0.5	0.5 U	1	0.5	1.0 U	1.0	0.36	0.5 U	1	0.5
1,3-Dichlorobenzene	---	1.2 U	1.2	0.42	0.5 U	1	0.5	0.5 U	1	0.5	0.5 U	1	0.5	1.0 U	1.0	0.36	0.5 U	1	0.5
1,4-Dichlorobenzene	1.7	1.2 U	1.2	0.47	0.5 U	1	0.5	0.5 U	1	0.5	0.5 U	1	0.5	1.0 U	1.0	0.40	0.5 U	1	0.5
3,3'-Dichlorobenzidine	---	5.9 U	5.9	1.8	2 U	5	2	2 U	5	2	2 U	5	2	5.0 U	5.0	1.5	2 U	5	2
2,4-Dichlorophenol	---	5.9 U	5.9	3.1	0.5 U	1	0.5	0.5 U	1	0.5	0.5 U	1	0.5	5.0 U	5.0	2.6	0.5 U	1	0.5
Diethylphthalate	4,236	1.2 U	1.2	0.68	2 U	5	2	2 U	5	2	2 U	5	2	1.0 U	1.0	0.58	2 U	5	2
2,4-Dimethylphenol	660	1.2 U	1.2	0.42	0.5 U	1	0.5	0.5 U	1	0.5	0.5 U	1	0.5	1.0 U	1.0	0.36	0.5 U	1	0.5
Dimethylphthalate	1,100,000	1.2 U	1.2	0.62	2 U	5	2	2 U	5	2	2 U	5	2	1.0 U	1.0	0.53	2 U	5	2
4,6-Dinitro-2-Methylphenol	---	12 U	12	3.6	5 U	14	5	5 U	15	5	5 U	15	5	10 U	10	3.1	5 U	16	5
2,4-Dinitrophenol	---	12 U	12	4.1	9 U	28	9	10 U	30	10	10 U	29	10	10 U	10	3.5	9 U	28	9
2,4-Dinitrotoluene	---	5.9 U	5.9	3.0	0.9 U	5	0.9	1 U	5	1	1 U	5	1	5.0 U	5.0	2.5	0.9 U	5	0.9
2,6-Dinitrotoluene	---	5.9 U	5.9	2.8	0.5 U	1	0.5	0.5 U	1	0.5	0.5 U	1	0.5	5.0 U	5.0	2.4	0.5 U	1	0.5
bis(2-Ethylhexyl)phthalate	1.2	1.2 U	1.2	2.2	2 U	5	2	2 U	5	2	2 U	5	2	1.0 U	1.0	1.9	2 U	5	2

TABLE L-1
GROUNDWATER ANALYTICAL RESULTS
BOEING ISAACSON-THOMPSON
REMEDIAL INVESTIGATION

Location:		IT-PZ-6			IT-PZ-6			IT-PZ-6			IT-PZ-6			IT-PZ-7			IT-PZ-7		
Laboratory Sample ID:	Preliminary	UA54A/UA54J/UA55A/UA55I/UB47A/UB47I			6571477/6571478/UL18G			6689149/6689150/6689151/UY55F			6788004/6788005/6788006/VJ03F			UA44E/UA44M/UA45E/UA45L/UB46E/UB46L			6578921/6578922/UM31D		
Laboratory Data Package ID:	Cleanup	UA54/UA55/UB47			1293989/UL18			1316071/UY55			1335480/VJ03			UA44/UA45/UB46			1295418/UM31		
Sample Date:	Levels	12/08/2011			03/07/2012			6/14/2012			9/11/2012			12/07/2011			3/13/2012		
		Result	Reporting Limit	Detection Limit	Result	Reporting Limit	Detection Limit	Result	Reporting Limit	Detection Limit	Result	Reporting Limit	Detection Limit	Result	Reporting Limit	Detection Limit	Result	Reporting Limit	Detection Limit
Fluoranthene	11	1.2 U	1.2	0.61	0.09 U	0.5	0.09	0.1 U	0.5	0.1	0.1 U	0.5	0.1	1.0 U	1.0	0.52	0.09 U	0.5	0.09
Fluorene	45	1.2 U	1.2	0.66	0.09 U	0.5	0.09	0.1 U	0.5	0.1	0.1 U	0.5	0.1	1.0 U	1.0	0.56	0.09 U	0.5	0.09
Hexachlorobenzene	---	1.2 U	1.2	0.55	0.09 U	0.5	0.09	0.1 U	0.5	0.1	0.1 U	0.5	0.1	1.0 U	1.0	0.47	0.09 U	0.5	0.09
Hexachlorobutadiene	---	1.2 U	1.2	0.36	0.5 U	1	0.5	0.5 U	1	0.5	0.5 U	1	0.5	1.0 U	1.0	0.31	0.5 U	1	0.5
Hexachlorocyclopentadiene	---	5.9 U	5.9	1.4	5 U	14	5	5 U	15	5	5 U	15	5	5.0 U	5.0	1.2	5 U	16	5
Hexachloroethane	---	1.2 U	1.2	0.41	0.9 U	5	0.9	1 U	5	1	1 U	5	1	1.0 U	1.0	0.35	0.9 U	5	0.9
Indeno(1,2,3-cd)pyrene	0.0018	1.2 U	1.2	0.57	0.09 U	0.5	0.09	0.1 U	0.5	0.1	0.1 U	0.5	0.1	1.0 U	1.0	0.48	0.09 U	0.5	0.09
Isophorone	---	1.2 U	1.2	0.57	0.5 U	1	0.5	0.5 U	1	0.5	0.5 U	1	0.5	1.0 U	1.0	0.48	0.5 U	1	0.5
1-Methylnaphthalene	2.3	1.2 U	1.2	0.56	0.09 U	0.5	0.09	0.1 U	0.5	0.1	0.1 U	0.5	0.1	1.0 U	1.0	0.48	0.09 U	0.5	0.09
2-Methylnaphthalene	64	1.2 U	1.2	0.56	0.09 U	0.5	0.09	0.1 U	0.5	0.1	0.1 U	0.5	0.1	1.0 U	1.0	0.48	0.09 U	0.5	0.09
2-Methylphenol	3100	1.2 U	1.2	0.62	0.5 U	1	0.5	0.5 U	1	0.5	0.5 U	1	0.5	1.0 U	1.0	0.53	0.5 U	1	0.5
4-Methylphenol	330	1.2 U	1.2	0.62	0.5 U	1	0.5	0.5 U	1	0.5	0.5 U	1	0.5	1.0 U	1.0	0.52	0.5 U	1	0.5
Naphthalene	26	1.2 U	1.2	0.61	**0.1** J1	0.5	0.1	**0.1** J1	0.5	0.1	**0.2** J1	0.5	0.1	1.0 U	1.0	0.52	**0.1** J	0.5	0.09
2-Nitroaniline	---	5.9 U	5.9	3.1	0.5 U	1	0.5	0.5 U	1	0.5	0.5 U	1	0.5	5.0 U	5.0	2.6	0.5 U	1	0.5
3-Nitroaniline	---	5.9 U	5.9	2.7	0.5 U	1	0.5	0.5 U	1	0.5	0.5 U	1	0.5	5.0 U	5.0	2.3	0.5 U	1	0.5
4-Nitroaniline	---	5.9 U	5.9	2.6	0.5 U	1	0.5	0.5 U	1	0.5	0.5 U	1	0.5	5.0 U	5.0	2.2	0.5 U	1	0.5
Nitrobenzene	---	1.2 U	1.2	0.68	0.5 U	1	0.5	0.5 U	1	0.5	0.5 U	1	0.5	1.0 U	1.0	0.58	0.5 U	1	0.5
2-Nitrophenol	---	5.9 U	5.9	2.3	0.5 U	1	0.5	0.5 U	1	0.5	0.5 U	1	0.5	5.0 U	5.0	2.0	0.5 U	1	0.5
4-Nitrophenol	---	5.9 U	5.9	3.0	9 U	28	9	10 U	30	10	10 U	29	10	5.0 U	5.0	2.6	9 U	28	9
N-Nitroso-Di-N-Propylamine	---	1.2 U	1.2	0.66	0.5 U	1	0.5	0.5 U	1	0.5	0.5 U	1	0.5	1.0 U	1.0	0.56	0.5 U	1	0.5
N-Nitrosodiphenylamine	1.96	1.2 U	1.2	0.54	0.5 U	1	0.5	0.5 U	1	0.5	0.5 U	1	0.5	1.0 U	1.0	0.46	0.5 U	1	0.5
Di-n-Octyl phthalate	---	1.2 U	1.2	0.60	2 U	5	2	2 U	5	2	2 U	5	2	1.0 U	1.0	0.51	2 U	5	2
Pentachlorophenol	---	5.9 U	5.9	2.8	0.9 U	5	0.9	1 U	5	1	1 U	5	1	5.0 U	5.0	2.4	0.9 U	5	0.9
Phenanthrene	---	1.2 U	1.2	0.66	0.09 U	0.5	0.09	0.1 U	0.5	0.1	0.1 U	0.5	0.1	1.0 U	1.0	0.56	0.09 U	0.5	0.09
Phenol	41,000	1.2 U	1.2	0.61	0.5 U	1	0.5	0.5 U	1	0.5	0.5 U	1	0.5	1.0 U	1.0	0.52	0.5 U	1	0.5
Pyrene	9.8	1.2 U	1.2	0.64	0.09 U	0.5	0.09	0.1 U	0.5	0.1	0.1 U	0.5	0.1	1.0 U	1.0	0.55	0.09 U	0.5	0.09
1,2,4-Trichlorobenzene	1.13	1.2 U	1.2	0.45	0.5 U	1	0.5	0.5 U	1	0.5	0.5 U	1	0.5	1.0 U	1.0	0.38	0.5 U	1	0.5
2,4,5-Trichlorophenol	---	5.9 U	5.9	2.6	0.5 U	1	0.5	0.5 U	1	0.5	0.5 U	1	0.5	5.0 U	5.0	2.2	0.5 U	1	0.5
2,4,6-Trichlorophenol	---	5.9 U	5.9	2.8	0.5 U	1	0.5	0.5 U	1	0.5	0.5 U	1	0.5	5.0 U	5.0	2.4	0.5 U	1	0.5
cPAHs (µg/L)																			
Method SW8270D-SIM																			
Benzo(a)anthracene	0.0018	0.010 U	0.010	0.0063	0.0048 U	0.0095	0.0048	0.0053 U	0.011	0.0053	0.0053 U	0.011	0.0053	0.010 U	0.010	0.0063	**0.0050** J1	0.0096	0.0048
Benzo(a)pyrene	0.00018	0.010 U	0.010	0.0048	0.0048 U	0.0095	0.0048	0.0053 U	0.011	0.0053	0.0053 U	0.011	0.0053	0.010 U	0.010	0.0048	0.0048 U	0.0096	0.0048
Benzo(b)fluoranthene	0.0018	NA	NA	NA	0.0048 U	0.0095	0.0048	0.0053 U	0.011	0.0053	0.0053 U	0.011	0.0053	NA	NA	NA	0.0048 U	0.0096	0.0048
Benzo(k)fluoranthene	0.0018	NA	NA	NA	0.0048 U	0.0095	0.0048	0.0053 U	0.011	0.0053	0.0053 U	0.011	0.0053	NA	NA	NA	0.0048 U	0.0096	0.0048
Total Benzofluoranthenes	0.0018	0.020 U	0.020	0.0099	NA	NA	NA	NA	NA	NA	NA	NA	NA	0.020 UJ	0.02	0.0099	NA	NA	NA
Chrysene	0.018	0.010 U	0.010	0.0046	0.0048 U	0.0095	0.0048	0.0053 U	0.011	0.0053	0.0053 U	0.011	0.0053	**0.0054** J1	0.010	0.0046	0.0048 U	0.0096	0.0048
Dibenz(a,h)anthracene	0.0018	0.010 U	0.010	0.0048	0.0038 U	0.0095	0.0038	0.0042 U	0.011	0.0042	0.0042 U	0.011	0.0042	0.010 U	0.010	0.0048	0.0038 U	0.0096	0.0038
Indeno(1,2,3-cd)pyrene	0.0018	0.010 U	0.010	0.0046	0.0038 U	0.0095	0.0038	0.0042 U	0.011	0.0042	0.0042 U	0.011	0.0042	0.010 U	0.010	0.0046	0.0038 U	0.0096	0.0038
Pyrene	9.8	NA	NA	NA	0.0095 U	0.048	0.0095	0.011 U	0.053	0.011	0.011 U	0.053	0.011	NA	NA	NA	**0.034** J1	0.048	0.0096
cPAH TEQ	0.00018	ND	NA	NA	ND	NA	NA	ND	NA	NA	ND	NA	NA	**0.0001** J	NA	NA	**0.0005** J	NA	NA
PCBs (µg/L)																			
Method SW8082																			
Aroclor 1016	0.000023	0.010 U	0.010	0.0025	0.0063 U	0.011	0.0063	0.0060 U	0.010	0.0060	0.0066 U	0.011	0.0066	0.010 U	0.010	0.0025	0.0057 U	0.0095	0.0057
Aroclor 1221	---	0.010 U	0.010	0.0028	0.0063 U	0.011	0.0063	0.0060 U	0.010	0.0060	0.0066 U	0.011	0.0066	0.010 U	0.010	0.0028	0.0057 U	0.0095	0.0057
Aroclor 1232	---	0.010 U	0.010	0.0028	0.0074 U	0.011	0.0074	0.0070 U	0.010	0.0070	0.0077 U	0.011	0.0077	0.010 U	0.010	0.0028	0.0066 U	0.0095	0.0066
Aroclor 1242	0.000023	0.010 U	0.010	0.0028	0.0063 U	0.011	0.0063	0.0060 U	0.010	0.0060	0.0066 U	0.011	0.0066	0.010 U	0.010	0.0028	0.0057 U	0.0095	0.0057
Aroclor 1248	0.000023	0.010 U	0.010	0.0028	0.0053 U	0.011	0.0053	0.0050 U	0.010	0.0050	0.0055 U	0.011	0.0055	0.010 U	0.010	0.0028	0.0047 U	0.0095	0.0047
Aroclor 1254	0.0000055	0.010 U	0.010	0.0028	0.0053 U	0.011	0.0053	0.0050 U	0.010	0.0050	0.0055 U	0.011	0.0055	0.010 U	0.010	0.0028	0.0047 U	0.0095	0.0047
Aroclor 1260	0.000023	0.010 U	0.010	0.0028	0.0053 U	0.011	0.0053	0.0050 U	0.010	0.0050	0.0055 U	0.011	0.0055	0.010 U	0.010	0.0028	0.0047 U	0.0095	0.0047
Total PCBs	0.000023	ND	NA	NA	ND	NA	NA	ND	NA	NA	ND	NA	NA	ND	NA	NA	ND	NA	NA

TABLE L-1
GROUNDWATER ANALYTICAL RESULTS
BOEING ISAACSON-THOMPSON
REMEDIAL INVESTIGATION

Location:		IT-PZ-6			IT-PZ-6			IT-PZ-6			IT-PZ-6			IT-PZ-7			IT-PZ-7		
Laboratory Sample ID:	Preliminary	UA54A/UA54J/UA55A/UA55I/UB47A/UB47I			6571477/6571478/UL18G			6689149/6689150/6689151/UY55F			6788004/6788005/6788006/VJ03F			UA44E/UA44M/UA45E/UA45L/UB46E/UB46L			6578921/6578922/UM31D		
Laboratory Data Package ID:	Cleanup	UA54/UA55/UB47			1293989/UL18			1316071/UY55			1335480/VJ03			UA44/UA45/UB46			1295418/UM31		
Sample Date:	Levels	12/08/2011			03/07/2012			6/14/2012			9/11/2012			12/07/2011			3/13/2012		
		Result	Reporting Limit	Detection Limit	Result	Reporting Limit	Detection Limit	Result	Reporting Limit	Detection Limit	Result	Reporting Limit	Detection Limit	Result	Reporting Limit	Detection Limit	Result	Reporting Limit	Detection Limit
TOTAL PETROLEUM HYDROCARBONS (mg/L)																			
NWTPH-Dx																			
Diesel-Range Organics	0.5	0.10 U	0.10	0.022	0.069 U	0.25	0.069	0.029 U	0.097	0.029	0.030 U	0.100	0.030	0.10 U	0.10	0.022	0.066 U	0.24	0.066
Oil-Range Organics	0.5	0.20 U	0.20	0.044	0.99 U	3.0	0.99	0.068 U	0.240	0.068	0.070 U	0.250	0.070	0.20 U	0.20	0.044	0.95 U	2.8	0.95
NWTPH-G																			
Gasoline-Range Organics	1.0/0.8	0.25 U	0.25	0.06	0.05 U	0.25	0.05	0.05 U	0.25	0.05	0.05 U	0.25	0.05	0.25 U	0.25	0.06	0.05 U	0.25	0.05
TOTAL METALS (µg/L)																			
Method 200.8																			
Antimony	---	0.5 U	0.5	0.025	0.42 U	1.0	0.42	**0.43** J1	1.0	0.10	**0.46** J1	1.0	0.33	0.9	0.2	0.010	**1.3**	1.0	0.42
Arsenic	---	**1560**	5	0.48	**462**	2.0	0.95	**7870**	2.0	2.0	**7280**	20.0	4.0	**3**	1	0.12	**3.5**	2.0	0.95
Barium	---	**163**	0.5	0.020	**177**	2.0	0.69	**152**	2.0	0.41	**191**	2.0	0.41	**93.4**	0.5	0.020	**28.7**	2.0	0.69
Beryllium	---	0.2 U	0.2	0.021	0.13 U	0.50	0.13	0.025 U	0.50	0.025	0.025 U	0.50	0.025	0.2 U	0.2	0.021	0.13 U	0.50	0.13
Cadmium	---	0.1 U	0.1	0.010	0.20 U	0.50	0.20	0.048 U	0.50	0.048	0.082 U	0.50	0.082	0.1 U	0.1	0.010	0.20 U	0.50	0.20
Chromium	---	1 U	1	0.11	**1.1** J1	2.0	0.60	**0.83** J1	2.0	0.10	**1.2** J1	2.0	0.50	**0.5**	0.5	0.045	**14.5**	2.0	0.60
Copper	---	1 U	1	0.40	**0.57** J1	2.0	0.38	**0.29** J1	2.0	0.15	**0.78** J1	2.0	0.40	**0.8**	0.5	0.158	**6.7**	2.0	0.38
Lead	---	0.1 U	0.1	0.046	**0.17** J1	1.0	0.080	0.034 U	1.0	0.034	0.034 U	1.0	0.034	0.1 U	0.1	0.046	**4.2**	1.0	0.080
Nickel	---	**4.5**	0.5	0.079	**1.4** J1	2.0	0.50	**0.68** J1	2.0	0.13	**0.69** J1	2.0	0.35	**4.2**	0.5	0.079	**2.5**	2.0	0.50
Selenium	---	5 U	5	0.32	**0.29** J1	2.0	0.27	**1.1** J1	2.0	0.18	**0.59** J, J1	2.0	0.50	5 U	5	0.32	0.27 U	2.0	0.27
Silver	---	0.2 U	0.2	0.008	0.098 U	0.50	0.098	0.046 U	0.50	0.046	0.10 U	0.50	0.10	0.2 U	0.2	0.008	0.098 U	0.50	0.098
Thallium	---	0.2 U	0.2	0.004	0.15 U	0.50	0.15	0.029 U	0.50	0.029	0.15 U	0.50	0.15	0.2 U	0.2	0.004	0.15 U	0.50	0.15
Zinc	---	4 U	4	0.50	4.0 U	15.0	4.0	1.1 U	15.0	1.1	**8.4** J1	15.0	1.1	4 U	4	0.50	**8.2** J1	15.0	4.0
Method SW7196A (mg/L)																			
Chromium VI	0.00058	0.010 U	0.010	0.00300	0.010 U	0.010	0.00300	0.010 U	0.010	0.00300	0.010 U	0.010	0.00300	0.010 U	0.010	0.00300	0.010 U	0.010	0.00300
Method SW7470A/EPA 1631E (ng/L)																			
Mercury	12	20.0 U	20.0	2.60	3.20 U	10.0	3.20	3.20 U	10.0	3.20	3.20 U	10.0	3.20	20.0 U	20.0	2.60	1.60 U	5.00	1.60
DISSOLVED METALS (µg/L)																			
Methods 200.8/SW7196A																			
Antimony	150	0.5 U	0.5	0.025	0.42 U	1.0	0.42	**0.31** J1	1.0	0.10	0.33 U	1.0	0.33	**0.8**	0.2	0.010	**0.79** J1	1.0	0.42
Arsenic	8	**1530**	5	0.48	**437**	2.0	0.95	**6610**	2.0	2.0	**8010**	20.0	4.0	**4**	1	0.12	**3.1**	2.0	0.95
Barium	770	**163**	0.5	0.020	**176**	2.0	0.69	**157**	2.0	0.41	**184**	2.0	0.41	**99.4**	0.5	0.020	**31.1**	2.0	0.69
Beryllium	12	0.2 U	0.2	0.021	0.13 U	0.50	0.13	0.025 U	0.50	0.025	0.025 U	0.50	0.025	0.2 U	0.2	0.021	0.13 U	0.50	0.13
Cadmium	0.25	0.1 U	0.1	0.010	0.20 U	0.50	0.20	0.048 U	0.50	0.048	0.082 U	0.50	0.082	0.1 U	0.1	0.010	0.20 U	0.50	0.20
Chromium	74	**1.4**	0.5	0.045	**1.1** J1	2.0	0.60	**0.89** J1	2.0	0.10	**0.98** J1	2.0	0.50	**0.7**	0.5	0.045	0.60 U	2.0	0.60
Copper	8	**1.1**	0.5	0.158	0.38 U	2.0	0.38	**0.25** J1	2.0	0.15	0.40 U	2.0	0.40	**0.9**	0.5	0.158	0.38 U	2.0	0.38
Lead	2.5	0.1 U	0.1	0.046	0.080 U	1.0	0.080	0.34 U	10.0	0.34	0.034 U	1.0	0.034	0.1 U	0.1	0.046	0.080 U	1.0	0.080
Nickel	8.2	**4.8**	0.5	0.079	**0.86** J1	2.0	0.50	**0.73** J1	2.0	0.13	**0.59** J1	2.0	0.35	**4.4**	0.5	0.079	0.50 U	2.0	0.50
Selenium	5	**5**	5	0.32	**0.38** J1	2.0	0.27	**1.4** J1	2.0	0.18	0.50 UJ	2.0	0.50	5 U	5	0.32	0.27 U	2.0	0.27
Silver	22	0.2 U	0.2	0.008	0.098 U	0.50	0.098	0.046 U	0.50	0.046	0.10 U	0.50	0.10	0.2 U	0.2	0.008	0.098 U	0.50	0.098
Thallium	0.47	0.2 U	0.2	0.004	0.15 U	0.50	0.15	0.29 U	0.50	0.029	0.15 U	0.50	0.15	0.2 U	0.2	0.004	0.15 U	0.50	0.15
Zinc	56	4 U	4	0.50	4.0 U	15.0	4.0	1.1 U	15.0	1.1	1.7 UJ2	15.0	1.1	4 U	4	0.50	4.0 U	15.0	4.0
Method SW7470A/EPA 1631E (ng/L)																			
Mercury	12	20.0 U	20.0	2.60	**5.00** J1	10.0	3.20	3.20 U	10.0	3.20	3.20 U	10.0	3.20	20.0 U	20.0	2.60	1.60 U	5.00	1.60
CONVENTIONALS (mg/L)																			
Chloride (Method 300.0)	---	NA	NA	NA	NA	NA	NA	**3450**	400	200	**2930**	400	200	NA	NA	NA	NA	NA	NA
Nitrate (Method 300.0)	---	0.5 U	0.5	0.035	0.050 U	0.10	0.050	0.050 U	0.10	0.050	0.050 U	0.10	0.050	0.5 U	0.5	0.035	0.050 U	0.10	0.050
Sulfate (Method 300.0)	---	**3.0**	0.1	0.059	**1.8**	1.0	0.30	**40.6**	10.0	3.0	**11.4**	1.0	0.30	**304**	10.0	5.90	**173**	25.0	7.5
Total Dissolved Solids (Method 160.1)	---	**5890**	100	100	**658**	120	38.8	**7180**	1200	388	**7410**	600	194	**4200**	100	100	**1760**	240	77.6
FIELD PARAMETERS																			
Temperature (°C)	---	14.85	NA	NA	14.17	NA	NA	15.14	NA	NA	16.22	NA	NA	13.49	NA	NA	10.11	NA	NA
Conductivity (uS/cm)	---	11885	NA	NA	5860	NA	NA	7348	NA	NA	6537	NA	NA	16504	NA	NA	2218	NA	NA
Dissolved Oxygen (mg/L)	---	0.79	NA	NA	0.44	NA	NA	0.32	NA	NA	0.49	NA	NA	1.33	NA	NA	0.68	NA	NA
pH (SU)	---	6.50	NA	NA	8.90	NA	NA	6.76	NA	NA	6.86	NA	NA	8.53	NA	NA	9.58	NA	NA
ORP (mV)	---	-86.8	NA	NA	-160.2	NA	NA	-142.9	NA	NA	-141.2	NA	NA	-27.2	NA	NA	-78.4	NA	NA
Turbidity (NTU)	---	2.8	NA	NA	3.39	NA	NA	6.68	NA	NA	7.51	NA	NA	1.94	NA	NA	4.22	NA	NA
Ferrous Iron (mg/L)	---	NA	NA	NA	1.8	NA	NA	2.0	NA	NA	2.6	NA	NA	NA	NA	NA	0.0	NA	NA

TABLE L-1
GROUNDWATER ANALYTICAL RESULTS
BOEING ISAACSON-THOMPSON
REMEDIAL INVESTIGATION

Location:		IT-PZ-7			IT-PZ-7			IT-PZ-8			IT-PZ-8			IT-PZ-8			IT-PZ-8		
Laboratory Sample ID:	Preliminary	6689152/6689153/6689154/UY55G			6788042/6788043/6788044/VJ32E			TZ99B/TZ99E/UA00B/UA00D/UB44B/UB44D			6577005/6577006/UM00C			6690474/6690475/6690476/UZ00B			6789050/6789051/6789052/VJ53B		
Laboratory Data Package ID:	Cleanup	1316071/UY55			1335483/VJ32			TZ99/UA00/UB44			1295065/UM00			1316296/UZ00			1335688/VJ53		
Sample Date:	Levels	6/14/2012			9/12/2012			12/05/2011			03/12/2012			6/15/2012			9/13/2012		
		Result	Reporting Limit	Detection Limit	Result	Reporting Limit	Detection Limit	Result	Reporting Limit	Detection Limit	Result	Reporting Limit	Detection Limit	Result	Reporting Limit	Detection Limit	Result	Reporting Limit	Detection Limit
VOLATILES (µg/L)																			
Method SW8260C																			
Acetone	110,000	3.0 U	5.0	3.0	3.0 U	5.0	3.0	1.8 UJ2	5.0	0.72	3.0 U	5.0	3.0	3.0 U	5.0	3.0	3.0 U	5.0	3.0
Acrolein	---	5.0 U	25	5.0	5.0 U	25	5.0	5.0 UJ	5.0	0.29	5.0 U	25	5.0	5.0 U	25	5.0	5.0 U	25	5.0
Acrylonitrile	0.057	1.0 U	5.0	1.0	1.0 U	5.0	1.0	1.0 U	1.0	0.18	1.0 U	5.0	1.0	1.0 U	5.0	1.0	1.0 U	5.0	1.0
Benzene	2	0.1 U	0.2	0.1	0.1 U	0.2	0.1	0.2 U	0.2	0.06	0.1 U	0.2	0.1	0.1 U	0.2	0.1	0.1 U	0.2	0.1
Bromobenzene	---	0.1 U	0.5	0.1	0.1 U	0.5	0.1	0.2 U	0.2	0.05	0.1 U	0.5	0.1	0.1 U	0.5	0.1	0.1 U	0.5	0.1
Bromochloromethane	---	0.1 U	0.5	0.1	0.1 U	0.5	0.1	0.2 U	0.2	0.07	0.1 U	0.5	0.1	0.1 U	0.5	0.1	0.1 U	0.5	0.1
Bromodichloromethane	17	0.1 U	0.5	0.1	0.1 U	0.5	0.1	0.2 U	0.2	0.05	0.1 U	0.5	0.1	0.1 U	0.5	0.1	0.1 U	0.5	0.1
Bromoform	---	0.1 U	0.5	0.1	0.1 U	0.5	0.1	0.2 U	0.2	0.07	0.1 U	0.5	0.1	0.1 U	0.5	0.1	0.1 U	0.5	0.1
Bromomethane	---	0.1 U	0.5	0.1	0.1 U	0.5	0.1	1.0 U	1.0	0.04	0.1 U	0.5	0.1	0.1 U	0.5	0.1	0.1 U	0.5	0.1
2-Butanone	73,000	1.0 U	5.0	1.0	1.0 U	5.0	1.0	5.0 U	5.0	0.81	1.0 U	5.0	1.0	1.0 U	5.0	1.0	1.0 U	5.0	1.0
n-Butylbenzene	780	0.1 U	0.5	0.1	0.1 U	0.5	0.1	0.2 U	0.2	0.11	0.1 U	0.5	0.1	0.1 U	0.5	0.1	0.1 U	0.5	0.1
sec-Butylbenzene	---	0.1 U	0.5	0.1	0.1 U	0.5	0.1	0.2 U	0.2	0.08	0.1 U	0.5	0.1	0.1 U	0.5	0.1	0.1 U	0.5	0.1
tert-Butylbenzene	---	0.1 U	0.5	0.1	0.1 U	0.5	0.1	0.2 U	0.2	0.06	0.1 U	0.5	0.1	0.1 U	0.5	0.1	0.1 U	0.5	0.1
Carbon Disulfide	3900	0.4 U	0.5	0.4	0.4 U	0.5	0.4	0.2 U	0.2	0.09	0.4 U	0.5	0.4	0.4 U	0.5	0.4	0.4 U	0.5	0.4
Carbon Tetrachloride	0.46	0.1 U	0.2	0.1	0.1 U	0.2	0.1	0.2 U	0.2	0.08	0.1 U	0.2	0.1	0.1 U	0.2	0.1	0.1 U	0.2	0.1
Chlorobenzene	270	0.1 U	0.5	0.1	0.1 U	0.5	0.1	0.2 U	0.2	0.04	0.1 U	0.5	0.1	0.1 U	0.5	0.1	0.1 U	0.5	0.1
Chloroethane	21,000	0.1 U	0.5	0.1	0.1 U	0.5	0.1	0.2 U	0.2	0.15	0.1 U	0.5	0.1	0.1 U	0.5	0.1	0.1 U	0.5	0.1
Chloroform	9.4	0.1 U	0.2	0.1	0.1 U	0.2	0.1	0.2 U	0.2	0.08	0.1 U	0.2	0.1	0.1 U	0.2	0.1	0.1 U	0.2	0.1
Chloromethane	10.3	0.2 U	0.5	0.2	0.2 U	0.5	0.2	0.5 U	0.5	0.10	0.2 U	0.5	0.2	0.2 U	0.5	0.2	0.2 U	0.5	0.2
2-Chlorotoluene	---	0.1 U	0.5	0.1	0.1 U	0.5	0.1	0.2 U	0.2	0.04	0.1 U	0.5	0.1	0.1 U	0.5	0.1	0.1 U	0.5	0.1
4-Chlorotoluene	2600	0.1 U	0.5	0.1	0.1 U	0.5	0.1	0.2 U	0.2	0.07	0.1 U	0.5	0.1	0.1 U	0.5	0.1	0.1 U	0.5	0.1
1,2-Dibromo-3-chloropropane	---	0.2 U	0.5	0.2	0.2 U	0.5	0.2	0.5 UJ	0.5	0.21	0.2 U	0.5	0.2	0.2 U	0.5	0.2	0.2 U	0.5	0.2
Dibromochloromethane	---	0.1 U	0.5	0.1	0.1 U	0.5	0.1	0.2 U	0.2	0.09	0.1 U	0.5	0.1	0.1 U	0.5	0.1	0.1 U	0.5	0.1
Dibromomethane	---	0.1 U	0.5	0.1	0.1 U	0.5	0.1	0.2 U	0.2	0.08	0.1 U	0.5	0.1	0.1 U	0.5	0.1	0.1 U	0.5	0.1
trans-1,4-Dichloro-2-butene	---	1.0 U	5.0	1.0	1.0 U	5.0	1.0	1.0 UJ	1.0	0.24	1.0 U	5.0	1.0	1.0 U	5.0	1.0	1.0 U	5.0	1.0
1,2-Dichlorobenzene	440	0.1 U	0.5	0.1	0.1 U	0.5	0.1	0.2 U	0.2	0.06	0.1 U	0.5	0.1	0.1 U	0.5	0.1	0.1 U	0.5	0.1
1,3-Dichlorobenzene	960	0.1 U	0.5	0.1	0.1 U	0.5	0.1	0.2 U	0.2	0.04	0.1 U	0.5	0.1	0.1 U	0.5	0.1	0.1 U	0.5	0.1
1,4-Dichlorobenzene	1.7	0.1 U	0.5	0.1	0.1 U	0.5	0.1	0.2 U	0.2	0.06	0.1 U	0.5	0.1	0.1 U	0.5	0.1	0.1 U	0.5	0.1
1,1-Dichloroethane	33	0.1 U	0.5	0.1	0.1 U	0.5	0.1	0.2 U	0.2	0.05	0.1 U	0.5	0.1	0.1 U	0.5	0.1	0.1 U	0.5	0.1
1,2-Dichloroethane	3.6	0.1 U	0.2	0.1	0.1 U	0.2	0.1	0.2 U	0.2	0.08	0.1 U	0.2	0.1	0.1 U	0.2	0.1	0.1 U	0.2	0.1
1,1-Dichloroethene	3.2	0.1 U	0.2	0.1	0.1 U	0.2	0.1	0.2 U	0.2	0.09	0.1 U	0.2	0.1	0.1 U	0.2	0.1	0.1 U	0.2	0.1
cis-1,2-Dichloroethene	130	0.1 U	0.2	0.1	0.1 U	0.2	0.1	0.2 U	0.2	0.10	0.1 U	0.2	0.1	0.1 U	0.2	0.1	0.1 U	0.2	0.1
trans-1,2-Dichloroethene	940	0.1 U	0.2	0.1	0.1 U	0.2	0.1	0.2 U	0.2	0.08	0.1 U	0.2	0.1	0.1 U	0.2	0.1	0.1 U	0.2	0.1
1,2-Dichloropropane	3.7	0.1 U	0.5	0.1	0.1 U	0.5	0.1	0.2 U	0.2	0.09	0.1 U	0.5	0.1	0.1 U	0.5	0.1	0.1 U	0.5	0.1
1,3-Dichloropropane	---	0.1 U	0.5	0.1	0.1 U	0.5	0.1	0.2 U	0.2	0.02	0.1 U	0.5	0.1	0.1 U	0.5	0.1	0.1 U	0.5	0.1
2,2-Dichloropropane	---	0.1 U	0.5	0.1	0.1 U	0.5	0.1	0.2 U	0.2	0.08	0.1 U	0.5	0.1	0.1 U	0.5	0.1	0.1 U	0.5	0.1
1,1-Dichloropropene	---	0.1 U	0.5	0.1	0.1 U	0.5	0.1	0.2 U	0.2	0.09	0.1 U	0.5	0.1	0.1 U	0.5	0.1	0.1 U	0.5	0.1
cis-1,3-Dichloropropene	---	0.1 U	0.2	0.1	0.1 U	0.2	0.1	0.2 U	0.2	0.06	0.1 U	0.2	0.1	0.1 U	0.2	0.1	0.1 U	0.2	0.1
trans-1,3-Dichloropropene	---	0.1 U	0.2	0.1	0.1 U	0.2	0.1	0.2 U	0.2	0.06	0.1 U	0.2	0.1	0.1 U	0.2	0.1	0.1 U	0.2	0.1
Ethylbenzene	1.7	0.1 U	0.5	0.1	0.1 U	0.5	0.1	0.2 U	0.2	0.09	0.1 U	0.5	0.1	0.1 U	0.5	0.1	0.1 U	0.5	0.1
Ethylene Dibromide	---	0.1 U	0.5	0.1	0.1 U	0.5	0.1	0.2 U	0.2	0.08	0.1 U	0.5	0.1	0.1 U	0.5	0.1	0.1 U	0.5	0.1
Hexachlorobutadiene	---	0.1 U	0.5	0.1	0.1 U	0.5	0.1	0.5 U	0.5	0.11	0.1 U	0.5	0.1	0.1 U	0.5	0.1	0.1 U	0.5	0.1
2-Hexanone	3200	1.0 U	5.0	1.0	1.0 U	5.0	1.0	5.0 U	5.0	0.31	1.0 U	5.0	1.0	1.0 U	5.0	1.0	1.0 U	5.0	1.0
Isopropylbenzene	270	0.1 U	0.5	0.1	0.1 U	0.5	0.1	0.2 U	0.2	0.06	0.1 U	0.5	0.1	0.1 U	0.5	0.1	0.1 U	0.5	0.1
4-Isopropyltoluene	---	0.1 U	0.5	0.1	0.1 U	0.5	0.1	0.2 U	0.2	0.08	0.1 U	0.5	0.1	0.1 U	0.5	0.1	0.1 U	0.5	0.1
Methyl Iodide	---	0.1 UJ	0.5	0.1	0.1 U	0.5	0.1	1.0 U	1.0	0.04	0.1 U	0.5	0.1	0.1 UJ	0.5	0.1	0.1 U	0.5	0.1
4-Methyl-2-Pentanone (MIBK)	19,000	1.0 U	5.0	1.0	1.0 U	5.0	1.0	5.0 U	5.0	0.38	1.0 U	5.0	1.0	1.0 U	5.0	1.0	1.0 U	5.0	1.0
Methylene Chloride	230	0.2 U	0.5	0.2	0.2 U	0.5	0.2	0.5 U	0.5	0.39	0.2 U	0.5	0.2	0.2 U	0.5	0.2	0.2 U	0.5	0.2
Naphthalene	26	0.1 U	0.5	0.1	**0.1** J1	0.5	0.1	0.5 U	0.5	0.07	0.1 U	0.5	0.1	0.1 U	0.5	0.1	0.1 U	0.5	0.1
n-Propylbenzene	530	0.1 U	0.5	0.1	0.1 U	0.5	0.1	0.2 U	0.2	0.08	0.1 U	0.5	0.1	0.1 U	0.5	0.1	0.1 U	0.5	0.1
Styrene	77,000	0.1 U	0.5	0.1	0.1 U	0.5	0.1	0.2 U	0.2	0.07	0.1 U	0.5	0.1	0.1 U	0.5	0.1	0.1 U	0.5	0.1
1,1,1,2-Tetrachloroethane	---	0.1 U	0.5	0.1	0.1 U	0.5	0.1	0.2 U	0.2	0.07	0.1 U	0.5	0.1	0.1 U	0.5	0.1	0.1 U	0.5	0.1
1,1,2,2-Tetrachloroethane	0.33	0.1 U	0.2	0.1	0.1 U	0.2	0.1	0.2 U	0.2	0.07	0.1 U	0.2	0.1	0.1 U	0.2	0.1	0.1 U	0.2	0.1
Tetrachloroethene	3.3	0.1 U	0.2	0.1	0.1 U	0.2	0.1	0.2 U	0.2	0.09	0.1 U	0.2	0.1	0.1 U	0.2	0.1	0.1 U	0.2	0.1
Toluene	1300	0.1 U	0.2	0.1	0.1 U	0.2	0.1	0.2 U	0.2	0.06	0.1 U	0.2	0.1	0.1 U	0.2	0.1	0.1 U	0.2	0.1
1,1,2-Trichloro-1,2,2-trifuoroethane	59,000	0.2 U	0.5	0.2	0.2 U	0.5	0.2	0.2 U	0.2	0.11	0.2 U	0.5	0.2	0.2 U	0.5	0.2	0.2 U	0.5	0.2
1,2,3-Trichlorobenzene	---	0.1 U	0.5	0.1	0.1 U	0.5	0.1	0.5 U	0.5	0.09	0.1 U	0.5	0.1	0.1 U	0.5	0.1	0.1 U	0.5	0.1

TABLE L-1
GROUNDWATER ANALYTICAL RESULTS
BOEING ISAACSON-THOMPSON
REMEDIAL INVESTIGATION

Location:		IT-PZ-7			IT-PZ-7			IT-PZ-8			IT-PZ-8			IT-PZ-8			IT-PZ-8		
Laboratory Sample ID:	Preliminary	6689152/6689153/6689154/UY55G			6788042/6788043/6788044/VJ32E			TZ99B/TZ99E/UA00B/UA00D/UB44B/UB44D			6577005/6577006/UM00C			6690474/6690475/6690476/UZ00B			6789050/6789051/6789052/VJ53B		
Laboratory Data Package ID:	Cleanup	1316071/UY55			1335483/VJ32			TZ99/UA00/UB44			1295065/UM00			1316296/UZ00			1335688/VJ53		
Sample Date:	Levels	6/14/2012			9/12/2012			12/05/2011			03/12/2012			6/15/2012			9/13/2012		
		Result	Reporting Limit	Detection Limit	Result	Reporting Limit	Detection Limit	Result	Reporting Limit	Detection Limit	Result	Reporting Limit	Detection Limit	Result	Reporting Limit	Detection Limit	Result	Reporting Limit	Detection Limit
1,2,4-Trichlorobenzene	1.13	0.1 U	0.5	0.1	0.1 U	0.5	0.1	0.5 U	0.5	0.10	0.1 U	0.5	0.1	0.1 U	0.5	0.1	0.1 U	0.5	0.1
1,1,1-Trichloroethane	46,000	0.1 U	0.5	0.1	0.1 U	0.5	0.1	0.2 U	0.2	0.09	0.1 U	0.5	0.1	0.1 U	0.5	0.1	0.1 U	0.5	0.1
1,1,2-Trichloroethane	2.3	0.1 U	0.2	0.1	0.1 U	0.2	0.1	0.2 U	0.2	0.04	0.1 U	0.2	0.1	0.1 U	0.2	0.1	0.1 U	0.2	0.1
Trichloroethene	1.4	0.1 U	0.2	0.1	0.1 U	0.2	0.1	0.2 U	0.2	0.08	0.1 U	0.2	0.1	0.1 U	0.2	0.1	0.1 U	0.2	0.1
Trichlorofluoromethane	6900	0.1 U	0.5	0.1	0.1 U	0.5	0.1	0.2 U	0.2	0.09	0.1 U	0.5	0.1	0.1 U	0.5	0.1	0.1 U	0.5	0.1
1,2,3-Trichloropropane	---	0.3 U	1.0	0.3	0.3 U	1.0	0.3	0.5 U	0.5	0.23	0.3 U	1.0	0.3	0.3 U	1.0	0.3	0.3 U	1.0	0.3
1,2,4-Trimethylbenzene	303	0.1 U	0.5	0.1	0.1 U	0.5	0.1	0.2 U	0.2	0.06	0.1 U	0.5	0.1	0.1 U	0.5	0.1	0.1 U	0.5	0.1
1,3,5-Trimethylbenzene	303	0.1 U	0.5	0.1	0.1 U	0.5	0.1	0.2 U	0.2	0.06	0.1 U	0.5	0.1	0.1 U	0.5	0.1	0.1 U	0.5	0.1
Vinyl Acetate	---	0.2 U	0.5	0.2	0.2 U	0.5	0.2	1.0 U	1.0	0.07	0.2 U	0.5	0.2	0.2 U	0.5	0.2	0.2 U	0.5	0.2
Vinyl Chloride	0.53	0.1 U	0.2	0.1	0.1 U	0.2	0.1	0.2 U	0.2	0.08	0.1 U	0.2	0.1	0.1 U	0.2	0.1	0.1 U	0.2	0.1
m,p-Xylene	1300	0.1 U	0.5	0.1	0.1 U	0.5	0.1	0.4 U	0.4	0.14	0.1 U	0.5	0.1	0.1 U	0.5	0.1	0.1 U	0.5	0.1
o-Xylene	1600	0.1 U	0.5	0.1	0.1 U	0.5	0.1	0.2 U	0.2	0.06	0.1 U	0.5	0.1	0.1 U	0.5	0.1	0.1 U	0.5	0.1
2-Chloroethylvinylether	---	NA	NA	NA	NA	NA	NA	1.0 U	1.0	0.09	NA	NA	NA	NA	NA	NA	NA	NA	NA
Bromoethane	---	NA	NA	NA	NA	NA	NA	0.2 U	0.2	0.09	NA	NA	NA	NA	NA	NA	NA	NA	NA
VOLATILES (µg/L)																			
Method SW8260C-SIM																			
Tetrachloroethene	3.3	**0.014** J1	0.020	0.010	0.010 U	0.020	0.010	0.020 U	0.020	0.0036	0.010 U	0.020	0.010	**0.25**	0.020	0.010	0.010 U	0.020	0.010
Vinyl Chloride	0.53	0.010 U	0.020	0.010	0.010 U	0.020	0.010	0.020 U	0.020	0.0022	0.010 U	0.020	0.010	0.010 U	0.020	0.010	0.010 U	0.020	0.010
Acrylonitrile	0.057	NA	NA	NA	NA	NA	NA	0.050 U	0.050	0.0158	NA	NA	NA	NA	NA	NA	NA	NA	NA
SEMIVOLATILES (µg/L)																			
Method SW8270D																			
Acenaphthene	120	**0.1** J1	0.5	0.09	**0.1** J1	0.5	0.1	1.0 U	1.0	0.55	0.1 U	0.5	0.1	0.09 U	0.5	0.09	0.09 U	0.5	0.09
Acenaphthylene	---	0.09 U	0.5	0.09	0.1 U	0.5	0.1	1.0 U	1.0	0.48	0.1 U	0.5	0.1	0.09 U	0.5	0.09	0.09 U	0.5	0.09
Anthracene	200	0.09 U	0.5	0.09	0.1 U	0.5	0.1	1.0 U	1.0	0.53	0.1 U	0.5	0.1	0.09 U	0.5	0.09	0.09 U	0.5	0.09
Benzo(a)anthracene	0.0018	0.09 U	0.5	0.09	0.1 U	0.5	0.1	1.0 U	1.0	0.52	0.1 U	0.5	0.1	0.09 U	0.5	0.09	0.09 U	0.5	0.09
Benzo(a)pyrene	0.00018	0.09 U	0.5	0.09	0.1 U	0.5	0.1	1.0 U	1.0	0.48	0.1 U	0.5	0.1	0.09 U	0.5	0.09	0.09 U	0.5	0.09
Benzo(b)fluoranthene	0.0018	0.09 U	0.5	0.09	0.1 U	0.5	0.1	NA	NA	NA	0.1 U	0.5	0.1	0.09 U	0.5	0.09	0.09 U	0.5	0.09
Benzo(g,h,i)perylene	---	0.09 U	0.5	0.09	0.1 U	0.5	0.1	1.0 U	1.0	0.55	0.1 U	0.5	0.1	0.09 U	0.5	0.09	0.09 U	0.5	0.09
Benzo(k)fluoranthene	0.0018	0.09 U	0.5	0.09	0.1 U	0.5	0.1	NA	NA	NA	0.1 U	0.5	0.1	0.09 U	0.5	0.09	0.09 U	0.5	0.09
Total Benzofluoranthenes	0.0018	NA	NA	NA	NA	NA	NA	1.0 U	1.0	0.48	NA	NA	NA	NA	NA	NA	NA	NA	NA
Benzoic Acid	2,240	6 U	14	6	6 U	14	6	10 UJ	10	5.1	7 UJ	17	7	6 U	14	6	6 UJ	14	6
Benzyl Alcohol	182	5 U	14	5	5 U	14	5	5.0 U	5.0	2.0	6 U	17	6	5 U	14	5	5 U	14	5
4-Bromophenyl-phenylether	---	0.5 U	0.9	0.5	0.5 U	1	0.5	1.0 U	1.0	0.42	0.6 U	1	0.6	0.5 U	0.9	0.5	0.5 U	0.9	0.5
Butylbenzylphthalate	0.41	2 U	5	2	2 U	5	2	1.0 U	1.0	0.56	2 U	5	2	2 U	5	2	2 U	5	2
Di-n-Butylphthalate	47	2 U	5	2	2 U	5	2	1.0 U	1.0	0.54	2 U	5	2	2 U	5	2	2 U	5	2
Carbazole	---	0.5 U	0.9	0.5	0.5 U	1	0.5	1.0 U	1.0	0.31	0.6 U	1	0.6	0.5 U	0.9	0.5	0.5 U	0.9	0.5
4-Chloro-3-methylphenol	3700	0.5 U	0.9	0.5	0.5 U	1	0.5	5.0 U	5.0	2.4	0.6 U	1	0.6	0.5 U	0.9	0.5	0.5 U	0.9	0.5
4-Chloroaniline	---	0.5 U	0.9	0.5	0.5 U	1	0.5	5.0 U	5.0	2.6	0.6 U	1	0.6	0.5 U	0.9	0.5	0.5 U	0.9	0.5
bis(2-Chloroethoxy) Methane	---	0.5 U	0.9	0.5	0.5 U	1	0.5	1.0 U	1.0	0.56	0.6 U	1	0.6	0.5 U	0.9	0.5	0.5 U	0.9	0.5
Bis-(2-Chloroethyl) Ether	---	0.5 U	0.9	0.5	0.5 U	1	0.5	1.0 U	1.0	0.58	0.6 U	1	0.6	0.5 U	0.9	0.5	0.5 U	0.9	0.5
2-Chloronaphthalene	---	0.4 U	0.9	0.4	0.4 U	1	0.4	1.0 U	1.0	0.48	0.4 U	1	0.4	0.4 U	0.9	0.4	0.4 U	0.9	0.4
2-Chlorophenol	---	0.5 U	0.9	0.5	0.5 U	1	0.5	1.0 U	1.0	0.53	0.6 U	1	0.6	0.5 U	0.9	0.5	0.5 U	0.9	0.5
4-Chlorophenyl-phenylether	---	0.5 U	0.9	0.5	0.5 U	1	0.5	1.0 U	1.0	0.45	0.6 U	1	0.6	0.5 U	0.9	0.5	0.5 U	0.9	0.5
2,2'-Oxybis(1-Chloropropane)	---	0.5 U	0.9	0.5	0.5 U	1	0.5	1.0 U	1.0	0.62	0.6 U	1	0.6	0.5 U	0.9	0.5	0.5 U	0.9	0.5
Chrysene	0.018	0.09 U	0.5	0.09	0.1 U	0.5	0.1	1.0 U	1.0	0.55	0.1 U	0.5	0.1	0.09 U	0.5	0.09	0.09 U	0.5	0.09
Dibenz(a,h)anthracene	0.0018	0.09 U	0.5	0.09	0.1 U	0.5	0.1	1.0 U	1.0	0.48	0.1 U	0.5	0.1	0.09 U	0.5	0.09	0.09 U	0.5	0.09
Dibenzofuran	1.3	0.5 U	0.9	0.5	0.5 U	1	0.5	1.0 U	1.0	0.48	0.6 U	1	0.6	0.5 U	0.9	0.5	0.5 U	0.9	0.5
1,2-Dichlorobenzene	440	0.5 U	0.9	0.5	0.5 U	1	0.5	1.0 U	1.0	0.36	0.6 U	1	0.6	0.5 U	0.9	0.5	0.5 U	0.9	0.5
1,3-Dichlorobenzene	---	0.5 U	0.9	0.5	0.5 U	1	0.5	1.0 U	1.0	0.36	0.6 U	1	0.6	0.5 U	0.9	0.5	0.5 U	0.9	0.5
1,4-Dichlorobenzene	1.7	0.5 U	0.9	0.5	0.5 U	1	0.5	1.0 U	1.0	0.40	0.6 U	1	0.6	0.5 U	0.9	0.5	0.5 U	0.9	0.5
3,3'-Dichlorobenzidine	---	2 U	5	2	2 U	5	2	5.0 U	5.0	1.5	2 U	6	2	2 U	5	2	2 U	5	2
2,4-Dichlorophenol	---	0.5 U	0.9	0.5	0.5 U	1	0.5	5.0 U	5.0	2.6	0.6 U	1	0.6	0.5 U	0.9	0.5	0.5 U	0.9	0.5
Diethylphthalate	4,236	2 U	5	2	2 U	5	2	1.0 U	1.0	0.58	2 U	5	2	2 U	5	2	2 U	5	2
2,4-Dimethylphenol	660	0.5 U	0.9	0.5	0.5 U	1	0.5	1.0 U	1.0	0.36	0.6 U	1	0.6	0.5 U	0.9	0.5	0.5 U	0.9	0.5
Dimethylphthalate	1,100,000	2 U	5	2	2 U	5	2	1.0 U	1.0	0.53	2 U	5	2	2 U	5	2	2 U	5	2
4,6-Dinitro-2-Methylphenol	---	5 U	14	5	5 U	14	5	10 U	10	3.1	6 U	17	6	5 U	14	5	5 U	14	5
2,4-Dinitrophenol	---	9 U	28	9	10 U	29	10	10 U	10	3.5	11 U	33	11	9 U	28	9	9 U	28	9
2,4-Dinitrotoluene	---	0.9 U	5	0.9	1 U	5	1	5.0 U	5.0	2.5	1 U	5	1	0.9 U	5	0.9	0.9 U	5	0.9
2,6-Dinitrotoluene	---	0.5 U	0.9	0.5	0.5 U	1	0.5	5.0 U	5.0	2.4	0.6 U	1	0.6	0.5 U	0.9	0.5	0.5 U	0.9	0.5
bis(2-Ethylhexyl)phthalate	1.2	2 U	5	2	2 U	5	2	1.0 U	1.0	1.9	2 U	5	2	2 U	5	2	2 U	5	2

TABLE L-1
GROUNDWATER ANALYTICAL RESULTS
BOEING ISAACSON-THOMPSON
REMEDIAL INVESTIGATION

Location:		IT-PZ-7			IT-PZ-7			IT-PZ-8			IT-PZ-8			IT-PZ-8			IT-PZ-8		
Laboratory Sample ID:	Preliminary	6689152/6689153/6689154/UY55G			6788042/6788043/6788044/VJ32E			TZ99B/TZ99E/UA00B/UA00D/UB44B/UB44D			6577005/6577006/UM00C			6690474/6690475/6690476/UZ00B			6789050/6789051/6789052/VJ53B		
Laboratory Data Package ID:	Cleanup	1316071/UY55			1335483/VJ32			TZ99/UA00/UB44			1295065/UM00			1316296/UZ00			1335688/VJ53		
Sample Date:	Levels	6/14/2012			9/12/2012			12/05/2011			03/12/2012			6/15/2012			9/13/2012		
		Result	Reporting Limit	Detection Limit	Result	Reporting Limit	Detection Limit	Result	Reporting Limit	Detection Limit	Result	Reporting Limit	Detection Limit	Result	Reporting Limit	Detection Limit	Result	Reporting Limit	Detection Limit
Fluoranthene	11	0.09 U	0.5	0.09	0.1 U	0.5	0.1	1.0 U	1.0	0.52	0.1 U	0.5	0.1	0.09 U	0.5	0.09	0.09 U	0.5	0.09
Fluorene	45	0.09 U	0.5	0.09	0.1 U	0.5	0.1	1.0 U	1.0	0.56	0.1 U	0.5	0.1	0.09 U	0.5	0.09	0.09 U	0.5	0.09
Hexachlorobenzene	---	0.09 U	0.5	0.09	0.1 U	0.5	0.1	1.0 U	1.0	0.47	0.1 U	0.5	0.1	0.09 U	0.5	0.09	0.09 U	0.5	0.09
Hexachlorobutadiene	---	0.5 U	0.9	0.5	0.5 U	1	0.5	1.0 U	1.0	0.31	0.6 U	1	0.6	0.5 U	0.9	0.5	0.5 U	0.9	0.5
Hexachlorocyclopentadiene	---	5 U	14	5	5 U	14	5	5.0 U	5.0	1.2	6 U	17	6	5 U	14	5	5 U	14	5
Hexachloroethane	---	0.9 U	5	0.9	1 U	5	1	1.0 U	1.0	0.35	1 U	5	1	0.9 U	5	0.9	0.9 U	5	0.9
Indeno(1,2,3-cd)pyrene	0.0018	0.09 U	0.5	0.09	0.1 U	0.5	0.1	1.0 U	1.0	0.48	0.1 U	0.5	0.1	0.09 U	0.5	0.09	0.09 U	0.5	0.09
Isophorone	---	0.5 U	0.9	0.5	0.5 U	1	0.5	1.0 U	1.0	0.48	0.6 U	1	0.6	0.5 U	0.9	0.5	0.5 U	0.9	0.5
1-Methylnaphthalene	2.3	0.09 U	0.5	0.09	0.1 U	0.5	0.1	1.0 U	1.0	0.48	0.1 U	0.5	0.1	0.09 U	0.5	0.09	0.09 U	0.5	0.09
2-Methylnaphthalene	64	0.09 U	0.5	0.09	0.1 U	0.5	0.1	1.0 U	1.0	0.48	0.1 U	0.5	0.1	0.09 U	0.5	0.09	0.09 U	0.5	0.09
2-Methylphenol	3100	0.5 U	0.9	0.5	0.5 U	1	0.5	1.0 U	1.0	0.53	0.6 U	1	0.6	0.5 U	0.9	0.5	0.5 U	0.9	0.5
4-Methylphenol	330	0.5 U	0.9	0.5	0.5 U	1	0.5	1.0 U	1.0	0.52	0.6 U	1	0.6	0.5 U	0.9	0.5	0.5 U	0.9	0.5
Naphthalene	26	**0.2** J1	0.5	0.09	**0.2** J1	0.5	0.1	1.0 U	1.0	0.52	0.1 U	0.5	0.1	0.09 U	0.5	0.09	0.09 U	0.5	0.09
2-Nitroaniline	---	0.5 U	0.9	0.5	0.5 U	1	0.5	5.0 U	5.0	2.6	0.6 U	1	0.6	0.5 U	0.9	0.5	0.5 U	0.9	0.5
3-Nitroaniline	---	0.5 U	0.9	0.5	0.5 U	1	0.5	5.0 U	5.0	2.3	0.6 U	1	0.6	0.5 U	0.9	0.5	0.5 U	0.9	0.5
4-Nitroaniline	---	0.5 U	0.9	0.5	0.5 U	1	0.5	5.0 U	5.0	2.2	0.6 U	1	0.6	0.5 U	0.9	0.5	0.5 U	0.9	0.5
Nitrobenzene	---	0.5 U	0.9	0.5	0.5 U	1	0.5	1.0 U	1.0	0.58	0.6 U	1	0.6	0.5 U	0.9	0.5	0.5 U	0.9	0.5
2-Nitrophenol	---	0.5 U	0.9	0.5	0.5 U	1	0.5	5.0 U	5.0	2.0	0.6 U	1	0.6	0.5 U	0.9	0.5	0.5 U	0.9	0.5
4-Nitrophenol	---	9 U	28	9	10 U	29	10	5.0 U	5.0	2.6	11 U	33	11	9 U	28	9	9 U	28	9
N-Nitroso-Di-N-Propylamine	---	0.5 U	0.9	0.5	0.5 U	1	0.5	1.0 U	1.0	0.56	0.6 U	1	0.6	0.5 U	0.9	0.5	0.5 U	0.9	0.5
N-Nitrosodiphenylamine	1.96	0.5 U	0.9	0.5	0.5 U	1	0.5	1.0 U	1.0	0.46	0.6 U	1	0.6	0.5 U	0.9	0.5	0.5 U	0.9	0.5
Di-n-Octyl phthalate	---	2 U	5	2	2 U	5	2	1.0 U	1.0	0.51	2 U	5	2	2 U	5	2	2 U	5	2
Pentachlorophenol	---	0.9 U	5	0.9	1 U	5	1	5.0 U	5.0	2.4	1 U	5	1	0.9 U	5	0.9	0.9 UJ	5	0.9
Phenanthrene	---	0.09 U	0.5	0.09	**0.2** J1	0.5	0.1	1.0 U	1.0	0.56	0.1 U	0.5	0.1	0.09 U	0.5	0.09	0.09 U	0.5	0.09
Phenol	41,000	0.5 U	0.9	0.5	0.5 U	1	0.5	1.0 U	1.0	0.52	0.6 U	1	0.6	0.5 U	0.9	0.5	0.5 U	0.9	0.5
Pyrene	9.8	0.09 U	0.5	0.09	**0.1** J1	0.5	0.1	1.0 U	1.0	0.55	0.1 U	0.5	0.1	0.09 U	0.5	0.09	0.09 U	0.5	0.09
1,2,4-Trichlorobenzene	1.13	0.5 U	0.9	0.5	0.5 U	1	0.5	1.0 U	1.0	0.38	0.6 U	1	0.6	0.5 U	0.9	0.5	0.5 U	0.9	0.5
2,4,5-Trichlorophenol	---	0.5 U	0.9	0.5	0.5 U	1	0.5	5.0 U	5.0	2.2	0.6 U	1	0.6	0.5 U	0.9	0.5	0.5 U	0.9	0.5
2,4,6-Trichlorophenol	---	0.5 U	0.9	0.5	0.5 U	1	0.5	5.0 U	5.0	2.4	0.6 U	1	0.6	0.5 U	0.9	0.5	0.5 U	0.9	0.5
cPAHs (µg/L)																			
Method SW8270D-SIM																			
Benzo(a)anthracene	0.0018	**0.0070** J1	0.0098	0.0049	**0.011**	0.0096	0.0048	0.010 U	0.010	0.0063	0.0048 U	0.0095	0.0048	0.0048 U	0.0096	0.0048	0.0047 U	0.0094	0.0047
Benzo(a)pyrene	0.00018	0.0049 U	0.0098	0.0049	**0.0070** J1	0.0096	0.0048	0.010 U	0.010	0.0048	0.0048 U	0.0095	0.0048	0.0048 U	0.0096	0.0048	0.0047 U	0.0094	0.0047
Benzo(b)fluoranthene	0.0018	0.0049 U	0.0098	0.0049	**0.0080** J1	0.0096	0.0048	NA	NA	NA	0.0048 U	0.0095	0.0048	0.0048 U	0.0096	0.0048	0.0047 U	0.0094	0.0047
Benzo(k)fluoranthene	0.0018	0.0049 U	0.0098	0.0049	**0.0090** J1	0.0096	0.0048	NA	NA	NA	0.0048 U	0.0095	0.0048	0.0048 U	0.0096	0.0048	0.0047 U	0.0094	0.0047
Total Benzofluoranthenes	0.0018	NA	NA	NA	NA	NA	NA	0.020 UJ	0.020	0.0099	NA	NA	NA	NA	NA	NA	NA	NA	NA
Chrysene	0.018	0.0049 U	0.0098	0.0049	**0.017**	0.0096	0.0048	0.010 U	0.010	0.0046	0.0048 U	0.0095	0.0048	0.0048 U	0.0096	0.0048	0.0047 U	0.0094	0.0047
Dibenz(a,h)anthracene	0.0018	0.0039 U	0.0098	0.0039	**0.0090** J1	0.0096	0.0038	0.010 U	0.010	0.0048	0.0038 U	0.0095	0.0038	0.0039 U	0.0096	0.0039	0.0038 U	0.0094	0.0038
Indeno(1,2,3-cd)pyrene	0.0018	0.0039 U	0.0098	0.0039	**0.0070** J1	0.0096	0.0038	0.010 U	0.010	0.0046	0.0038 U	0.0095	0.0038	0.0039 U	0.0096	0.0039	0.0038 U	0.0094	0.0038
Pyrene	9.8	0.053	0.049	0.0098	**0.092**	0.048	0.0096	NA	NA	NA	0.0095 U	0.048	0.0095	0.0096 U	0.048	0.0096	0.0094 U	0.047	0.0094
cPAH TEQ	0.00018	**0.0007** J	NA	NA	**0.0116** J	NA	NA	ND	NA	NA	ND	NA	NA	ND	NA	NA	ND	NA	NA
PCBs (µg/L)																			
Method SW8082																			
Aroclor 1016	0.000023	0.0059 U	0.0098	0.0059	0.0057 U	0.0094	0.0057	0.010 U	0.010	0.0025	0.0060 U	0.010	0.0060	0.0057 U	0.0095	0.0057	0.0058 U	0.0097	0.0058
Aroclor 1221	---	0.0059 U	0.0098	0.0059	0.0057 U	0.0094	0.0057	0.010 U	0.010	0.0028	0.0060 U	0.010	0.0060	0.0057 U	0.0095	0.0057	0.0058 U	0.0097	0.0058
Aroclor 1232	---	0.0068 U	0.0098	0.0068	0.0066 U	0.0094	0.0066	0.010 U	0.010	0.0028	0.0070 U	0.010	0.0070	0.0067 U	0.0095	0.0067	0.0068 U	0.0097	0.0068
Aroclor 1242	0.000023	0.0059 U	0.0098	0.0059	0.0057 U	0.0094	0.0057	0.010 U	0.010	0.0028	0.0060 U	0.010	0.0060	0.0057 U	0.0095	0.0057	0.0058 U	0.0097	0.0058
Aroclor 1248	0.000023	0.0049 U	0.0098	0.0049	0.0047 U	0.0094	0.0047	0.010 U	0.010	0.0028	0.0050 U	0.010	0.0050	0.0048 U	0.0095	0.0048	0.0048 U	0.0097	0.0048
Aroclor 1254	0.0000055	0.0049 U	0.0098	0.0049	0.0047 U	0.0094	0.0047	0.010 U	0.010	0.0028	0.0050 U	0.010	0.0050	0.0048 U	0.0095	0.0048	0.0048 U	0.0097	0.0048
Aroclor 1260	0.000023	0.0049 U	0.0098	0.0049	0.0047 U	0.0094	0.0047	0.010 U	0.010	0.0028	0.0050 U	0.010	0.0050	0.0048 U	0.0095	0.0048	0.0048 U	0.0097	0.0048
Total PCBs	0.000023	ND	NA	NA	ND	NA	NA	ND	NA	NA	ND	NA	NA	ND	NA	NA	ND	NA	NA

TABLE L-1
GROUNDWATER ANALYTICAL RESULTS
BOEING ISAACSON-THOMPSON
REMEDIAL INVESTIGATION

Location:		IT-PZ-7			IT-PZ-7			IT-PZ-8			IT-PZ-8			IT-PZ-8			IT-PZ-8		
Laboratory Sample ID:	Preliminary	6689152/6689153/6689154/UY55G			6788042/6788043/6788044/VJ32E			TZ99B/TZ99E/UA00B/UA00D/UB44B/UB44D			6577005/6577006/UM00C			6690474/6690475/6690476/UZ00B			6789050/6789051/6789052/VJ53B		
Laboratory Data Package ID:	Cleanup	1316071/UY55			1335483/VJ32			TZ99/UA00/UB44			1295065/UM00			1316296/UZ00			1335688/VJ53		
Sample Date:	Levels	6/14/2012			9/12/2012			12/05/2011			03/12/2012			6/15/2012			9/13/2012		
		Result	Reporting Limit	Detection Limit	Result	Reporting Limit	Detection Limit	Result	Reporting Limit	Detection Limit	Result	Reporting Limit	Detection Limit	Result	Reporting Limit	Detection Limit	Result	Reporting Limit	Detection Limit
TOTAL PETROLEUM HYDROCARBONS (mg/L)																			
NWTPH-Dx																			
Diesel-Range Organics	0.5	0.030 U	0.100	0.030	0.028 U	0.094	0.028	0.10 U	0.10	0.022	0.069 U	0.25	0.069	0.030 U	0.099	0.030	0.029 U	0.096	0.029
Oil-Range Organics	0.5	0.071 U	0.250	0.071	0.066 U	0.240	0.066	0.20 U	0.20	0.044	0.98 U	2.9	0.98	0.069 U	0.250	0.069	0.067 U	0.240	0.067
NWTPH-G																			
Gasoline-Range Organics	1.0/0.8	0.05 U	0.25	0.05	0.05 U	0.25	0.05	0.25 U	0.25	0.06	0.05 U	0.25	0.05	0.05 U	0.25	0.05	0.05 U	0.25	0.05
TOTAL METALS (µg/L)																			
Method 200.8																			
Antimony	---	**1.0** J1	1.0	0.10	**0.68** J1	1.0	0.33	0.2 U	0.2	0.010	0.42 U	1.0	0.42	0.33 U	1.0	0.33	0.33 U	1.0	0.33
Arsenic	---	**6.7**	2.0	0.20	**4.0**	2.0	0.40	**1.2**	0.5	0.048	0.95 U	2.0	0.95	**0.94** J1	2.0	0.20	**0.90** J1	2.0	0.40
Barium	---	**20.8**	2.0	0.41	**235**	2.0	0.41	**11.6**	0.5	0.020	**34.9**	2.0	0.69	**21.9**	2.0	0.41	**10.1**	2.0	0.41
Beryllium	---	0.025 U	0.50	0.025	0.025 U	0.50	0.025	0.2 U	0.2	0.021	0.13 U	0.50	0.13	0.025 U	0.50	0.025	0.025 U	0.50	0.025
Cadmium	---	0.048 U	0.50	0.048	0.082 U	0.50	0.082	0.1 U	0.1	0.010	0.20 U	0.50	0.20	0.048 U	0.50	0.048	0.082 U	0.50	0.082
Chromium	---	**1.5** J1	2.0	0.10	0.50 U	2.0	0.50	**1.1**	0.5	0.045	0.60 U	2.0	0.60	**0.49** J1	2.0	0.10	**1.0** J1	2.0	0.50
Copper	---	**0.95** J1	2.0	0.15	0.40 U	2.0	0.40	0.5 U	0.5	0.158	0.38 U	2.0	0.38	**0.28** J1	2.0	0.15	0.40 U	2.0	0.40
Lead	---	**0.30** J1	1.0	0.034	**0.10** J1	1.0	0.034	0.1 U	0.1	0.046	0.080 U	1.0	0.080	0.034 U	1.0	0.034	**0.047** J1	1.0	0.034
Nickel	---	**0.41** J1	2.0	0.13	0.35 U	2.0	0.35	**0.6**	0.5	0.079	0.50 U	2.0	0.50	0.13 U	2.0	0.13	0.35 U	2.0	0.35
Selenium	---	**0.27** J1	2.0	0.18	0.50 U	2.0	0.50	**2**	2	0.13	0.27 U	2.0	0.27	**0.23** J1	2.0	0.18	0.50 U	2.0	0.50
Silver	---	0.046 U	0.50	0.046	0.10 U	0.50	0.10	0.2 U	0.2	0.008	0.098 U	0.50	0.098	0.10 U	0.50	0.10	0.10 U	0.50	0.10
Thallium	---	0.029 U	0.50	0.029	0.15 U	0.50	0.15	0.2 U	0.2	0.004	0.15 U	0.50	0.15	0.029 U	0.50	0.029	0.15 U	0.50	0.15
Zinc	---	1.1 U	15.0	1.1	1.1 U	15.0	1.1	4 U	4	0.50	4.0 U	15.0	4.0	1.1 U	15.0	1.1	1.1 U	15.0	1.1
Method SW7196A (mg/L)																			
Chromium VI	0.00058	0.010 U	0.010	0.00300	0.010 U	0.010	0.00300	0.010 U	0.010	0.00300	0.010 U	0.010	0.00300	0.010 U	0.010	0.00300	0.010 U	0.010	0.00300
Method SW7470A/EPA 1631E (ng/L)																			
Mercury	12	**0.716**	0.500	0.160	1.60 U	5.00	1.60	20.0 U	20.0	2.60	1.60 U	5.00	1.60	0.160 U	0.500	0.160	**0.308** J1	0.500	0.160
DISSOLVED METALS (µg/L)																			
Methods 200.8/SW7196A																			
Antimony	150	**0.84** J1	1.0	0.10	**0.67** J1	1.0	0.33	0.2 U	0.2	0.010	0.42 U	1.0	0.42	0.33 U	1.0	0.33	0.33 U	1.0	0.33
Arsenic	8	**4.2**	2.0	0.20	**3.6**	2.0	0.40	**2.0**	0.2	0.048	0.95 U	2.0	0.95	**1.1** J1	2.0	0.20	**1.0** J1	2.0	0.40
Barium	770	**20.1**	2.0	0.41	**249**	2.0	0.41	**12.3**	0.5	0.020	**33.2**	2.0	0.69	**21.1**	2.0	0.41	**9.5**	2.0	0.41
Beryllium	12	0.025 U	0.50	0.025	0.025 U	0.50	0.025	0.2 U	0.2	0.021	0.13 U	0.50	0.13	0.025 U	0.50	0.025	0.025 U	0.50	0.025
Cadmium	0.25	0.048 U	0.50	0.048	0.082 U	0.50	0.082	0.1 U	0.1	0.010	0.20 U	0.50	0.20	0.048 U	0.50	0.048	0.082 U	0.50	0.082
Chromium	74	**0.14** J1	2.0	0.10	0.50 U	2.0	0.50	**1.0**	0.5	0.045	0.60 U	2.0	0.60	**0.39** J1	2.0	0.10	**1.0** J1	2.0	0.50
Copper	8	**0.36** J1	2.0	0.15	0.40 U	2.0	0.40	0.5 U	0.5	0.158	0.38 U	2.0	0.38	**2.8**	2.0	0.15	0.40 U	2.0	0.40
Lead	2.5	**0.037** J1	1.0	0.034	**0.086** J1	1.0	0.034	0.1 U	0.1	0.046	0.080 U	1.0	0.080	**0.097** J1	1.0	0.034	0.034 U	1.0	0.034
Nickel	8.2	**0.25** J1	2.0	0.13	0.35 U	2.0	0.35	**0.7**	0.5	0.079	0.50 U	2.0	0.50	0.13 U	2.0	0.13	0.35 U	2.0	0.35
Selenium	5	**0.22** J1	2.0	0.18	0.50 U	2.0	0.50	**3.8**	0.5	0.127	0.27 U	2.0	0.27	**0.22** J1	2.0	0.18	0.50 U	2.0	0.50
Silver	22	0.046 U	0.50	0.046	0.10 U	0.50	0.10	0.2 U	0.2	0.008	0.098 U	0.50	0.098	0.10 U	0.50	0.10	0.10 U	0.50	0.10
Thallium	0.47	0.029 U	0.50	0.029	0.15 U	0.50	0.15	0.2 U	0.2	0.004	0.15 U	0.50	0.15	0.029 U	0.50	0.029	0.15 U	0.50	0.15
Zinc	56	**2.3** J1	15.0	1.1	**1.3** J1	15.0	1.1	4 U	4	0.50	4.0 U	15.0	4.0	**4.2** J1	15.0	1.1	**1.4** J1	15.0	1.1
Method SW7470A/EPA 1631E (ng/L)																			
Mercury	12	**0.458** J1	0.500	0.160	3.20 U	10.0	3.20	20.0 U	20.0	2.60	1.60 U	5.00	1.60	**0.428** J1	0.500	0.160	**0.419** J1	0.500	0.160
CONVENTIONALS (mg/L)																			
Chloride (Method 300.0)	---	**674**	200	100	**4210**	800	400	NA	NA	NA	NA	NA	NA	**1020**	200	100	**407**	80.0	40.0
Nitrate (Method 300.0)	---	0.050 U	0.10	0.050	0.050 U	0.10	0.050	0.1 U	0.1	0.007	0.050 U	0.10	0.050	0.050 U	0.10	0.050	0.050 U	0.10	0.050
Sulfate (Method 300.0)	---	**176**	100	30.0	**457**	50.0	15.0	**24.0**	1.0	0.590	**12.5**	1.0	0.30	**119**	10.0	3.0	**35.9**	5.0	1.5
Total Dissolved Solids (Method 160.1)	---	**1350**	240	77.6	**5550**	600	194	**1250**	20.0	20.0	**2280**	240	77.6	**1890**	240	77.6	**998**	120	38.8
FIELD PARAMETERS																			
Temperature (°C)	---	11.00	NA	NA	14.30	NA	NA	16.1	NA	NA	14.75	NA	NA	14.3	NA	NA	17.18	NA	NA
Conductivity (uS/cm)	---	1785	NA	NA	9517	NA	NA	1878	NA	NA	3546	NA	NA	2783	NA	NA	1830	NA	NA
Dissolved Oxygen (mg/L)	---	0.43	NA	NA	0.46	NA	NA	1.4	NA	NA	0.61	NA	NA	0.43	NA	NA	0.93	NA	NA
pH (SU)	---	10.02	NA	NA	9.63	NA	NA	6.8	NA	NA	7.23	NA	NA	7.06	NA	NA	6.60	NA	NA
ORP (mV)	---	-150.5	NA	NA	-161.3	NA	NA	-49.9	NA	NA	-111.8	NA	NA	-111.1	NA	NA	-137	NA	NA
Turbidity (NTU)	---	8.37	NA	NA	8.35	NA	NA	2.5	NA	NA	2.59	NA	NA	25.65	NA	NA	47.6	NA	NA
Ferrous Iron (mg/L)	---	0.0	NA	NA	0.0	NA	NA	NA	NA	NA	1.8	NA	NA	3.8	NA	NA	2.0	NA	NA

TABLE L-1
GROUNDWATER ANALYTICAL RESULTS
BOEING ISAACSON-THOMPSON
REMEDIAL INVESTIGATION

Location:		IT-Seep-1			IT-Seep-1			IT-Seep-1		
Laboratory Sample ID:	Preliminary	6582528/6582529/UM85A			6695717/6695718/6695719/UZ55A			6801231/6801232/6801233/VK67A		
Laboratory Data Package ID:	Cleanup	1296010/UM85			1317333/UZ55			1338005/VK67		
Sample Date:	Levels	3/15/2012			6/20/2012			9/25/2012		
		Result	Reporting Limit	Detection Limit	Result	Reporting Limit	Detection Limit	Result	Reporting Limit	Detection Limit
VOLATILES (µg/L)										
Method SW8260C										
Acetone	110,000	3.0 U	5.0	3.0	3.0 U	5.0	3.0	3.0 U	5.0	3.0
Acrolein	---	5.0 U	25	5.0	5.0 U	25	5.0	5.0 U	25	5.0
Acrylonitrile	0.057	1.0 U	5.0	1.0	1.0 U	5.0	1.0	1.0 U	5.0	1.0
Benzene	2	0.1 U	0.2	0.1	0.1 U	0.2	0.1	0.1 U	0.2	0.1
Bromobenzene	---	0.1 U	0.5	0.1	0.1 U	0.5	0.1	0.1 U	0.5	0.1
Bromochloromethane	---	0.1 U	0.5	0.1	0.1 U	0.5	0.1	0.1 U	0.5	0.1
Bromodichloromethane	17	0.1 U	0.5	0.1	0.1 U	0.5	0.1	0.1 U	0.5	0.1
Bromoform	---	0.1 U	0.5	0.1	0.1 UJ	0.5	0.1	0.1 U	0.5	0.1
Bromomethane	---	0.1 U	0.5	0.1	0.1 U	0.5	0.1	0.1 U	0.5	0.1
2-Butanone	73,000	1.0 U	5.0	1.0	1.0 U	5.0	1.0	1.0 U	5.0	1.0
n-Butylbenzene	780	0.1 U	0.5	0.1	0.1 U	0.5	0.1	0.1 U	0.5	0.1
sec-Butylbenzene	---	0.1 U	0.5	0.1	0.1 U	0.5	0.1	0.1 U	0.5	0.1
tert-Butylbenzene	---	0.1 U	0.5	0.1	0.1 U	0.5	0.1	0.1 U	0.5	0.1
Carbon Disulfide	3900	0.4 U	0.5	0.4	0.4 U	0.5	0.4	0.4 U	0.5	0.4
Carbon Tetrachloride	0.46	0.1 U	0.2	0.1	0.1 U	0.2	0.1	0.1 U	0.2	0.1
Chlorobenzene	270	0.1 U	0.5	0.1	0.1 U	0.5	0.1	0.1 U	0.5	0.1
Chloroethane	21,000	0.1 U	0.5	0.1	0.1 U	0.5	0.1	0.1 U	0.5	0.1
Chloroform	9.4	0.1 U	0.2	0.1	0.1 U	0.2	0.1	0.1 U	0.2	0.1
Chloromethane	10.3	0.2 U	0.5	0.2	0.2 U	0.5	0.2	0.2 U	0.5	0.2
2-Chlorotoluene	---	0.1 U	0.5	0.1	0.1 U	0.5	0.1	0.1 U	0.5	0.1
4-Chlorotoluene	2600	0.1 U	0.5	0.1	0.1 U	0.5	0.1	0.1 U	0.5	0.1
1,2-Dibromo-3-chloropropane	---	0.2 U	0.5	0.2	0.2 U	0.5	0.2	0.2 U	0.5	0.2
Dibromochloromethane	---	0.1 U	0.5	0.1	0.1 U	0.5	0.1	0.1 U	0.5	0.1
Dibromomethane	---	0.1 U	0.5	0.1	0.1 U	0.5	0.1	0.1 U	0.5	0.1
trans-1,4-Dichloro-2-butene	---	1.0 U	5.0	1.0	1.0 UJ	5.0	1.0	1.0 U	5.0	1.0
1,2-Dichlorobenzene	440	0.1 U	0.5	0.1	0.1 U	0.5	0.1	0.1 U	0.5	0.1
1,3-Dichlorobenzene	960	0.1 U	0.5	0.1	0.1 U	0.5	0.1	0.1 U	0.5	0.1
1,4-Dichlorobenzene	1.7	0.1 U	0.5	0.1	0.1 U	0.5	0.1	0.1 U	0.5	0.1
1,1-Dichloroethane	33	0.1 U	0.5	0.1	0.1 U	0.5	0.1	0.1 U	0.5	0.1
1,2-Dichloroethane	3.6	0.1 U	0.2	0.1	0.1 U	0.2	0.1	0.1 U	0.2	0.1
1,1-Dichloroethene	3.2	0.1 U	0.2	0.1	0.1 U	0.2	0.1	0.1 U	0.2	0.1
cis-1,2-Dichloroethene	130	0.1 U	0.2	0.1	0.1 U	0.2	0.1	0.1 U	0.2	0.1
trans-1,2-Dichloroethene	940	0.1 U	0.2	0.1	0.1 U	0.2	0.1	0.1 U	0.2	0.1
1,2-Dichloropropane	3.7	0.1 U	0.5	0.1	0.1 U	0.5	0.1	0.1 U	0.5	0.1
1,3-Dichloropropane	---	0.1 U	0.5	0.1	0.1 U	0.5	0.1	0.1 U	0.5	0.1
2,2-Dichloropropane	---	0.1 U	0.5	0.1	0.1 U	0.5	0.1	0.1 U	0.5	0.1
1,1-Dichloropropene	---	0.1 U	0.5	0.1	0.1 U	0.5	0.1	0.1 U	0.5	0.1
cis-1,3-Dichloropropene	---	0.1 U	0.2	0.1	0.1 U	0.2	0.1	0.1 U	0.2	0.1
trans-1,3-Dichloropropene	---	0.1 U	0.2	0.1	0.1 U	0.2	0.1	0.1 U	0.2	0.1
Ethylbenzene	1.7	0.1 U	0.5	0.1	0.1 U	0.5	0.1	0.1 U	0.5	0.1
Ethylene Dibromide	---	0.1 U	0.5	0.1	0.1 U	0.5	0.1	0.1 U	0.5	0.1
Hexachlorobutadiene	---	0.1 U	0.5	0.1	0.1 U	0.5	0.1	0.1 U	0.5	0.1
2-Hexanone	3200	1.0 U	5.0	1.0	1.0 U	5.0	1.0	1.0 U	5.0	1.0
Isopropylbenzene	270	0.1 U	0.5	0.1	0.1 U	0.5	0.1	0.1 U	0.5	0.1
4-Isopropyltoluene	---	0.1 U	0.5	0.1	0.1 U	0.5	0.1	0.1 U	0.5	0.1
Methyl Iodide	---	0.1 U	0.5	0.1	0.1 U	0.5	0.1	0.1 U	0.5	0.1
4-Methyl-2-Pentanone (MIBK)	19,000	1.0 U	5.0	1.0	1.0 U	5.0	1.0	1.0 U	5.0	1.0
Methylene Chloride	230	0.2 U	0.5	0.2	0.2 U	0.5	0.2	0.2 U	0.5	0.2
Naphthalene	26	0.1 U	0.5	0.1	0.1 U	0.5	0.1	0.1 U	0.5	0.1
n-Propylbenzene	530	0.1 U	0.5	0.1	0.1 U	0.5	0.1	0.1 U	0.5	0.1
Styrene	77,000	0.1 U	0.5	0.1	0.1 U	0.5	0.1	0.1 U	0.5	0.1
1,1,1,2-Tetrachloroethane	---	0.1 U	0.5	0.1	0.1 U	0.5	0.1	0.1 U	0.5	0.1
1,1,2,2-Tetrachloroethane	0.33	0.1 U	0.2	0.1	0.1 U	0.2	0.1	0.1 U	0.2	0.1
Tetrachloroethene	3.3	0.1 U	0.2	0.1	0.1 U	0.2	0.1	0.1 U	0.2	0.1
Toluene	1300	0.1 U	0.2	0.1	0.1 U	0.2	0.1	0.1 U	0.2	0.1
1,1,2-Trichloro-1,2,2-trifuoroethane	59,000	0.2 U	0.5	0.2	0.2 U	0.5	0.2	0.2 U	0.5	0.2
1,2,3-Trichlorobenzene	---	0.1 U	0.5	0.1	0.1 U	0.5	0.1	0.1 U	0.5	0.1

TABLE L-1
GROUNDWATER ANALYTICAL RESULTS
BOEING ISAACSON-THOMPSON
REMEDIAL INVESTIGATION

Location:		IT-Seep-1			IT-Seep-1			IT-Seep-1		
Laboratory Sample ID:	Preliminary	6582528/6582529/UM85A			6695717/6695718/6695719/UZ55A			6801231/6801232/6801233/VK67A		
Laboratory Data Package ID:	Cleanup	1296010/UM85			1317333/UZ55			1338005/VK67		
Sample Date:	Levels	3/15/2012			6/20/2012			9/25/2012		
		Result	Reporting Limit	Detection Limit	Result	Reporting Limit	Detection Limit	Result	Reporting Limit	Detection Limit
1,2,4-Trichlorobenzene	1.13	0.1 U	0.5	0.1	0.1 U	0.5	0.1	0.1 U	0.5	0.1
1,1,1-Trichloroethane	46,000	0.1 U	0.5	0.1	0.1 U	0.5	0.1	0.1 U	0.5	0.1
1,1,2-Trichloroethane	2.3	0.1 U	0.2	0.1	0.1 U	0.2	0.1	0.1 U	0.2	0.1
Trichloroethene	1.4	0.1 U	0.2	0.1	0.1 U	0.2	0.1	0.1 U	0.2	0.1
Trichlorofluoromethane	6900	0.1 U	0.5	0.1	0.1 U	0.5	0.1	0.1 U	0.5	0.1
1,2,3-Trichloropropane	---	0.3 U	1.0	0.3	0.3 U	1.0	0.3	0.3 U	1.0	0.3
1,2,4-Trimethylbenzene	303	0.1 U	0.5	0.1	0.1 U	0.5	0.1	0.1 U	0.5	0.1
1,3,5-Trimethylbenzene	303	0.1 U	0.5	0.1	0.1 U	0.5	0.1	0.1 U	0.5	0.1
Vinyl Acetate	---	0.2 U	0.5	0.2	0.2 U	0.5	0.2	0.2 U	0.5	0.2
Vinyl Chloride	0.53	0.1 U	0.2	0.1	0.1 U	0.2	0.1	0.1 U	0.2	0.1
m,p-Xylene	1300	0.1 U	0.5	0.1	0.1 U	0.5	0.1	0.1 U	0.5	0.1
o-Xylene	1600	0.1 U	0.5	0.1	0.1 U	0.5	0.1	0.1 U	0.5	0.1
2-Chloroethylvinylether	---	NA	NA	NA	NA	NA	NA	NA	NA	NA
Bromoethane	---	NA	NA	NA	NA	NA	NA	NA	NA	NA
VOLATILES (µg/L)										
Method SW8260C-SIM										
Tetrachloroethene	3.3	0.010 U	0.020	0.010	0.012 UJ2	0.020	0.010	**0.010** J1	0.020	0.010
Vinyl Chloride	0.53	0.010 U	0.020	0.010	0.010 U	0.020	0.010	0.010 U	0.020	0.010
Acrylonitrile	0.057	NA	NA	NA	NA	NA	NA	NA	NA	NA
SEMIVOLATILES (µg/L)										
Method SW8270D										
Acenaphthene	120	0.1 U	0.5	0.1	0.1 U	0.5	0.1	0.09 U	0.5	0.09
Acenaphthylene	---	0.1 U	0.5	0.1	0.1 U	0.5	0.1	0.09 U	0.5	0.09
Anthracene	200	0.1 U	0.5	0.1	0.1 U	0.5	0.1	0.09 U	0.5	0.09
Benzo(a)anthracene	0.0018	0.1 U	0.5	0.1	0.1 U	0.5	0.1	0.09 U	0.5	0.09
Benzo(a)pyrene	0.00018	0.1 U	0.5	0.1	0.1 U	0.5	0.1	0.09 U	0.5	0.09
Benzo(b)fluoranthene	0.0018	0.1 U	0.5	0.1	0.1 U	0.5	0.1	0.09 U	0.5	0.09
Benzo(g,h,i)perylene	---	0.1 U	0.5	0.1	0.1 U	0.5	0.1	0.09 U	0.5	0.09
Benzo(k)fluoranthene	0.0018	0.1 U	0.5	0.1	0.1 U	0.5	0.1	0.09 U	0.5	0.09
Total Benzofluoranthenes	0.0018	NA	NA	NA	NA	NA	NA	NA	NA	NA
Benzoic Acid	2,240	6 U	14	6	6 U	14	6	6 U	14	6
Benzyl Alcohol	182	5 U	14	5	5 U	14	5	5 U	14	5
4-Bromophenyl-phenylether	---	0.5 U	1	0.5	0.5 U	1	0.5	0.5 U	0.9	0.5
Butylbenzylphthalate	0.41	2 U	5	2	2 U	5	2	2 U	5	2
Di-n-Butylphthalate	47	2 U	5	2	2 U	5	2	2 U	5	2
Carbazole	---	0.5 U	1	0.5	0.5 U	1	0.5	0.5 U	0.9	0.5
4-Chloro-3-methylphenol	3700	0.5 U	1	0.5	0.5 U	1	0.5	0.5 U	0.9	0.5
4-Chloroaniline	---	0.5 U	1	0.5	0.5 U	1	0.5	0.5 U	0.9	0.5
bis(2-Chloroethoxy) Methane	---	0.5 U	1	0.5	0.5 U	1	0.5	0.5 U	0.9	0.5
Bis-(2-Chloroethyl) Ether	---	0.5 U	1	0.5	0.5 U	1	0.5	0.5 U	0.9	0.5
2-Chloronaphthalene	---	0.4 U	1	0.4	0.4 U	1	0.4	0.4 U	0.9	0.4
2-Chlorophenol	---	0.5 U	1	0.5	0.5 U	1	0.5	0.5 U	0.9	0.5
4-Chlorophenyl-phenylether	---	0.5 U	1	0.5	0.5 U	1	0.5	0.5 U	0.9	0.5
2,2'-Oxybis(1-Chloropropane)	---	0.5 U	1	0.5	0.5 U	1	0.5	0.5 U	0.9	0.5
Chrysene	0.018	0.1 U	0.5	0.1	0.1 U	0.5	0.1	0.09 U	0.5	0.09
Dibenz(a,h)anthracene	0.0018	0.1 U	0.5	0.1	0.1 U	0.5	0.1	0.09 U	0.5	0.09
Dibenzofuran	1.3	0.5 U	1	0.5	0.5 U	1	0.5	0.5 U	0.9	0.5
1,2-Dichlorobenzene	440	0.5 U	1	0.5	0.5 U	1	0.5	0.5 U	0.9	0.5
1,3-Dichlorobenzene	---	0.5 U	1	0.5	0.5 U	1	0.5	0.5 U	0.9	0.5
1,4-Dichlorobenzene	1.7	0.5 U	1	0.5	0.5 U	1	0.5	0.5 U	0.9	0.5
3,3'-Dichlorobenzidine	---	2 U	5	2	2 U	5	2	2 U	5	2
2,4-Dichlorophenol	---	0.5 U	1	0.5	0.5 U	1	0.5	0.5 U	0.9	0.5
Diethylphthalate	4,236	2 U	5	2	2 U	5	2	2 U	5	2
2,4-Dimethylphenol	660	0.5 U	1	0.5	0.5 U	1	0.5	0.5 U	0.9	0.5
Dimethylphthalate	1,100,000	2 U	5	2	2 U	5	2	2 U	5	2
4,6-Dinitro-2-Methylphenol	---	5 U	14	5	5 U	14	5	5 U	14	5
2,4-Dinitrophenol	---	10 U	29	10	10 U	29	10	9 U	28	9
2,4-Dinitrotoluene	---	1 U	5	1	1 U	5	1	0.9 U	5	0.9
2,6-Dinitrotoluene	---	0.5 U	1	0.5	0.5 U	1	0.5	0.5 U	0.9	0.5
bis(2-Ethylhexyl)phthalate	1.2	2 U	5	2	2 U	5	2	2 U	5	2

TABLE L-1
GROUNDWATER ANALYTICAL RESULTS
BOEING ISAACSON-THOMPSON
REMEDIAL INVESTIGATION

Location:		IT-Seep-1			IT-Seep-1			IT-Seep-1		
Laboratory Sample ID:	Preliminary	6582528/6582529/UM85A			6695717/6695718/6695719/UZ55A			6801231/6801232/6801233/VK67A		
Laboratory Data Package ID:	Cleanup	1296010/UM85			1317333/UZ55			1338005/VK67		
Sample Date:	Levels	3/15/2012			6/20/2012			9/25/2012		
		Result	Reporting Limit	Detection Limit	Result	Reporting Limit	Detection Limit	Result	Reporting Limit	Detection Limit
Fluoranthene	11	0.1 U	0.5	0.1	0.1 U	0.5	0.1	**0.2** J1	0.5	0.09
Fluorene	45	0.1 U	0.5	0.1	0.1 U	0.5	0.1	0.09 U	0.5	0.09
Hexachlorobenzene	---	0.1 U	0.5	0.1	0.1 U	0.5	0.1	0.09 U	0.5	0.09
Hexachlorobutadiene	---	0.5 U	1	0.5	0.5 U	1	0.5	0.5 U	0.9	0.5
Hexachlorocyclopentadiene	---	5 U	14	5	5 U	14	5	5 U	14	5
Hexachloroethane	---	1 U	5	1	1 U	5	1	0.9 U	5	0.9
Indeno(1,2,3-cd)pyrene	0.0018	0.1 U	0.5	0.1	0.1 U	0.5	0.1	0.09 U	0.5	0.09
Isophorone	---	0.5 U	1	0.5	0.5 U	1	0.5	0.5 U	0.9	0.5
1-Methylnaphthalene	2.3	0.1 U	0.5	0.1	0.1 U	0.5	0.1	0.09 U	0.5	0.09
2-Methylnaphthalene	64	0.1 U	0.5	0.1	0.1 U	0.5	0.1	0.09 U	0.5	0.09
2-Methylphenol	3100	0.5 U	1	0.5	0.5 U	1	0.5	0.5 U	0.9	0.5
4-Methylphenol	330	0.5 U	1	0.5	0.5 U	1	0.5	0.5 U	0.9	0.5
Naphthalene	26	**0.1** J1	0.5	0.1	**0.1** J1	0.5	0.1	0.09 U	0.5	0.09
2-Nitroaniline	---	0.5 U	1	0.5	0.5 U	1	0.5	0.5 U	0.9	0.5
3-Nitroaniline	---	0.5 U	1	0.5	0.5 U	1	0.5	0.5 U	0.9	0.5
4-Nitroaniline	---	0.5 U	1	0.5	0.5 U	1	0.5	0.5 U	0.9	0.5
Nitrobenzene	---	0.5 U	1	0.5	0.5 U	1	0.5	0.5 U	0.9	0.5
2-Nitrophenol	---	0.5 U	1	0.5	0.5 U	1	0.5	0.5 U	0.9	0.5
4-Nitrophenol	---	10 U	29	10	10 U	29	10	9 U	28	9
N-Nitroso-Di-N-Propylamine	---	0.5 U	1	0.5	0.5 U	1	0.5	0.5 U	0.9	0.5
N-Nitrosodiphenylamine	1.96	0.5 U	1	0.5	0.5 U	1	0.5	0.5 U	0.9	0.5
Di-n-Octyl phthalate	---	2 U	5	2	2 U	5	2	2 U	5	2
Pentachlorophenol	---	1 U	5	1	1 U	5	1	0.9 U	5	0.9
Phenanthrene	---	0.1 U	0.5	0.1	0.1 U	0.5	0.1	**0.1** J1	0.5	0.09
Phenol	41,000	0.5 U	1	0.5	0.5 U	1	0.5	0.5 U	0.9	0.5
Pyrene	9.8	0.1 U	0.5	0.1	0.1 U	0.5	0.1	**0.2** J1	0.5	0.09
1,2,4-Trichlorobenzene	1.13	0.5 U	1	0.5	0.5 U	1	0.5	0.5 U	0.9	0.5
2,4,5-Trichlorophenol	---	0.5 U	1	0.5	0.5 U	1	0.5	0.5 U	0.9	0.5
2,4,6-Trichlorophenol	---	0.5 U	1	0.5	0.5 U	1	0.5	0.5 U	0.9	0.5
cPAHs (µg/L)										
Method SW8270D-SIM										
Benzo(a)anthracene	0.0018	**0.0060** J1	0.0097	0.0048	**0.0050** J1	0.0095	0.0048	**0.11**	0.0094	0.0047
Benzo(a)pyrene	0.00018	**0.0050** J1	0.0097	0.0048	0.0048 U	0.0095	0.0048	**0.11**	0.0094	0.0047
Benzo(b)fluoranthene	0.0018	**0.011**	0.0097	0.0048	**0.0060** J1	0.0095	0.0048	**0.16**	0.0094	0.0047
Benzo(k)fluoranthene	0.0018	0.0048 U	0.0097	0.0048	0.0048 U	0.0095	0.0048	**0.058**	0.0094	0.0047
Total Benzofluoranthenes	0.0018	NA	NA	NA	NA	NA	NA	NA	NA	NA
Chrysene	0.018	**0.0080** J1	0.0097	0.0048	**0.0050** J1	0.0095	0.0048	**0.13**	0.0094	0.0047
Dibenz(a,h)anthracene	0.0018	0.0039 U	0.0097	0.0039	0.0038 U	0.0095	0.0038	**0.020**	0.0094	0.0038
Indeno(1,2,3-cd)pyrene	0.0018	**0.0040** J1	0.0097	0.0039	0.0038 U	0.0095	0.0038	**0.061**	0.0094	0.0038
Pyrene	9.8	**0.012** J1	0.048	0.0097	**0.015** J1	0.048	0.0095	**0.22**	0.047	0.0094
cPAH TEQ	0.00018	**0.0072** J	NA	NA	**0.0012** J	NA	NA	**0.152**	NA	NA
PCBs (µg/L)										
Method SW8082										
Aroclor 1016	0.000023	0.0057 U	0.0095	0.0057	0.0057 U	0.0095	0.0057	0.0057 U	0.0094	0.0057
Aroclor 1221	---	0.0057 U	0.0095	0.0057	0.0057 U	0.0095	0.0057	0.0057 U	0.0094	0.0057
Aroclor 1232	---	0.0067 U	0.0095	0.0067	0.0066 U	0.0095	0.0066	0.0066 U	0.0094	0.0066
Aroclor 1242	0.000023	0.0057 U	0.0095	0.0057	0.0057 U	0.0095	0.0057	0.0057 U	0.0094	0.0057
Aroclor 1248	0.000023	0.0048 U	0.0095	0.0048	0.0047 U	0.0095	0.0047	0.0047 U	0.0094	0.0047
Aroclor 1254	0.0000055	**0.0097**	0.0095	0.0048	**0.011**	0.0095	0.0047	0.0047 U	0.0094	0.0047
Aroclor 1260	0.000023	0.0048 U	0.0095	0.0048	0.0047 U	0.0095	0.0047	0.0047 U	0.0094	0.0047
Total PCBs	0.000023	**0.0097**	NA	NA	**0.011**	NA	NA	ND	NA	NA

TABLE L-1
GROUNDWATER ANALYTICAL RESULTS
BOEING ISAACSON-THOMPSON
REMEDIAL INVESTIGATION

Location:		IT-Seep-1			IT-Seep-1			IT-Seep-1		
Laboratory Sample ID:	Preliminary	6582528/6582529/UM85A			6695717/6695718/6695719/UZ55A			6801231/6801232/6801233/VK67A		
Laboratory Data Package ID:	Cleanup	1296010/UM85			1317333/UZ55			1338005/VK67		
Sample Date:	Levels	3/15/2012			6/20/2012			9/25/2012		
		Result	Reporting Limit	Detection Limit	Result	Reporting Limit	Detection Limit	Result	Reporting Limit	Detection Limit
TOTAL PETROLEUM HYDROCARBONS (mg/L)										
NWTPH-Dx										
Diesel-Range Organics	0.5	0.070 U	0.25	0.070	0.029 U	0.095	0.029	0.029 U	0.096	0.029
Oil-Range Organics	0.5	1.0 U	3.0	1.0	0.067 U	0.240	0.067	0.067 U	0.240	0.067
NWTPH-G										
Gasoline-Range Organics	1.0/0.8	0.05 U	0.25	0.05	0.05 U	0.25	0.05	0.05 U	0.25	0.05
TOTAL METALS (µg/L)										
Method 200.8										
Antimony	---	**0.49** J1	1.0	0.42	**0.43** J1	1.0	0.42	3.3 U	10.0	3.3
Arsenic	---	**4.5**	2.0	0.95	**2.2**	2.0	0.95	**5.9**	2.0	0.40
Barium	---	**6.8**	2.0	0.69	**8.5**	2.0	0.69	**28.8**	2.0	0.41
Beryllium	---	0.13 U	0.50	0.13	0.13 U	0.50	0.13	0.025 U	0.50	0.025
Cadmium	---	0.20 U	0.50	0.20	0.20 U	0.50	0.20	**0.14** J1	0.50	0.082
Chromium	---	**2.1**	2.0	0.60	**2.3**	2.0	0.60	**5.0**	2.0	0.50
Copper	---	**1.4** J1	2.0	0.38	**2.0** J1	2.0	0.38	4.0 U	20.0	4.0
Lead	---	**0.74** J1	1.0	0.080	**2.7**	1.0	0.080	**0.95** J1	10.0	0.34
Nickel	---	**3.0**	2.0	0.50	**3.1**	2.0	0.50	**7.9** J1	20.0	3.5
Selenium	---	0.27 U	2.0	0.27	0.27 U	2.0	0.27	**0.75** J1	2.0	0.50
Silver	---	0.098 U	0.50	0.098	0.098 U	0.50	0.098	0.10 U	0.50	0.10
Thallium	---	0.15 U	0.50	0.15	0.15 U	0.50	0.15	1.5 U	5.0	1.5
Zinc	---	4.0 U	15.0	4.0	**4.9** J, J1	15.0	4.0	**7.1** J1	15.0	1.1
Method SW7196A (mg/L)										
Chromium VI	0.00058	0.010 U	0.010	0.00300	0.010 U	0.010	0.00300	0.010 U	0.010	0.00300
Method SW7470A/EPA 1631E (ng/L)										
Mercury	12	**2.86** J1	5.00	1.60	**1.43**	0.500	0.160	5.60 U	10.0	5.60
DISSOLVED METALS (µg/L)										
Methods 200.8/SW7196A										
Antimony	150	**0.56** J1	1.0	0.42	0.42 U	1.0	0.42	1.7 U	5.0	1.7
Arsenic	8	**3.9**	2.0	0.95	**1.5** J1	2.0	0.95	**4.0** J1	10.0	2.0
Barium	770	**6.6**	2.0	0.69	**8.2**	2.0	0.69	**30.3**	10.0	2.1
Beryllium	12	0.13 U	0.50	0.13	0.13 U	0.50	0.13	0.025 U	0.50	0.025
Cadmium	0.25	0.20 U	0.50	0.20	0.20 U	0.50	0.20	0.41 U	2.5	0.41
Chromium	74	**1.9** J1	2.0	0.60	**2.1**	2.0	0.60	**4.3** J1	10.0	2.5
Copper	8	**1.2** J1	2.0	0.38	**0.63** J1	2.0	0.38	2.0 U	10.0	2.0
Lead	2.5	0.080 U	1.0	0.080	0.080 U	1.0	0.080	0.17 U	5.0	0.17
Nickel	8.2	**2.9**	2.0	0.50	**2.9**	2.0	0.50	**5.3** J1	10.0	1.8
Selenium	5	0.27 U	2.0	0.27	0.27 U	2.0	0.27	2.5 U	10.0	2.5
Silver	22	0.098 U	0.50	0.098	0.098 U	0.50	0.098	0.50 U	2.5	0.50
Thallium	0.47	0.15 U	0.50	0.15	0.15 U	0.50	0.15	0.75 U	2.5	0.75
Zinc	56	**4.1** J1	15.0	4.0	4.0 UJ	15.0	4.0	5.5 U	75.0	5.5
Method SW7470A/EPA 1631E (ng/L)										
Mercury	12	**2.21** J1	5.00	1.60	**2.44** J1	5.00	1.60	5.60 U	10.0	5.60
CONVENTIONALS (mg/L)										
Chloride (Method 300.0)	---	NA	NA	NA	**2310**	200	100	**8740**	800	400
Nitrate (Method 300.0)	---	**0.44**	0.10	0.050	**0.39**	0.10	0.050	**0.27**	0.10	0.050
Sulfate (Method 300.0)	---	**263**	20.0	6.0	**278**	50.0	15.0	**1010**	500	150
Total Dissolved Solids (Method 160.1)	---	**3450**	600	194	**4080**	600	194	**14,200**	2400	776
FIELD PARAMETERS										
Temperature (°C)	---	9.10	NA	NA	17.13	NA	NA	16.89	NA	NA
Conductivity (uS/cm)	---	4028	NA	NA	5724	NA	NA	24600	NA	NA
Dissolved Oxygen (mg/L)	---	6.82	NA	NA	6.50	NA	NA	3.61	NA	NA
pH (SU)	---	7.08	NA	NA	8.72	NA	NA	7.39	NA	NA
ORP (mV)	---	67.2	NA	NA	16.4	NA	NA	101	NA	NA
Turbidity (NTU)	---	NA	NA	NA	NA	NA	NA	NA	NA	NA
Ferrous Iron (mg/L)	---	NA	NA	NA	0.4	NA	NA	NA	NA	NA

TABLE L-1
GROUNDWATER ANALYTICAL RESULTS
BOEING ISAACSON-THOMPSON
REMEDIAL INVESTIGATION

ND = Not Detected.
NA = Not Applicable.
µg/L = micrograms per liter
mg/L = milligrams per liter
ng/L = nanograms per liter
SIM = Selected Ion Monitoring
cPAHs = carginogenic polycyclic aromatic hydrocarbons
TEQ = Toxic Equivalent Concentration
PCBs = polychlorinated biphenyls
Bold = Detected compound.
Box = Exceeds Preliminary Cleanup Level
*Sample results include original digest and analysis and re-digest and analysis.

NTU = nephelometric turbidity unit
mV = millivolt
ORP = oxygen reduction potential
SU = standard unit
NWTPH-Dx = Total Petroleum Hydrocarbon-Diesel Range
NWTPH-G = Total Petroleum Hydrocarbon-Gasoline Range

U = Indicates the compound was not detected at or above the reporting limit.
J1 = Laboratory flag indicating the analyte was positively identified; the associated concentration is approximate and less than the reporting limit, but equal to or greater than the detection limit.
UJ2 = The analyted was not detected in the sample at or above the numerical value shown; the numerical value is below the reporting limit, but greater than the detection limit.
E = Estimated concentration calculated for an analyte response above the valid instrument calibration range. A dilution is required to obtain an accurate quantification of the analyte.
J = Indicates the analyte was positively identified; the associated numerical value is the approximate concentration of the analyte in the sample.
UJ = The analyte was not detected in the sample at a concentration at or above the reporting limit; thesample reporting limit is an estimate.
M = Indicates an estimated value of analyte found and confirmed by analyst but with low spectral match.
R = The sample results are rejected due to serious deficiencies in the ability to analyze the samples and meet quality control criteria. The presence or absence of the analyte cannot be verified.
S = Indicates an analyte response that has saturated the detector. The calculated concentration is not valid; a dilution is required to obtain valid quantification of the analyte.

APPENDIX M

RI Soil Analytical Results

TABLE M-1
TEST PIT SOIL ANALYTICAL RESULTS
BOEING ISAACSON-THOMPSON
REMEDIAL INVESTIGATION

	Preliminary Cleanup Level	IT-TP-101-B(12-13) TT59A 10/24/2011			IT-TP-102-B(13-14) TT67B 10/25/2011			IT-TP-103-SWE(5-6) TT67C 10/25/2011			IT-TP-103-SWE(6-7) TT67D 10/25/2011			IT-TP-103-SWE(12-13) TT67E 10/25/2011		
		Result	Reporting Limit	Detection Limit	Result	Reporting Limit	Detection Limit	Result	Reporting Limit	Detection Limit	Result	Reporting Limit	Detection Limit	Result	Reporting Limit	Detection Limit
VOLATILES (µg/kg)																
Method SW8260C																
Chloromethane	1,600	1.3 U	1.3	0.35	1.3 U	1.3	0.35	1.3 U	1.3	0.34	1.4 U	1.4	0.36	1.3 U	1.3	0.35
Bromomethane	---	1.3 U	1.3	0.25	1.3 U	1.3	0.25	1.3 U	1.3	0.24	1.4 U	1.4	0.26	1.3 U	1.3	0.25
Vinyl Chloride	7.4	1.3 U	1.3	0.31	1.3 U	1.3	0.32	1.3 U	1.3	0.31	1.4 U	1.4	0.32	1.3 U	1.3	0.31
Chloroethane	280,000	1.3 U	1.3	0.61	1.3 U	1.3	0.62	1.3 U	1.3	0.60	1.4 U	1.4	0.64	1.3 U	1.3	0.61
Methylene Chloride	2400	**2.6**	2.6	0.84	2.7 U	2.7	0.85	2.6 U	2.6	0.83	2.8 U	2.8	0.87	2.6 U	2.6	0.84
Acetone	510,000	**25**	6.6	0.64	**22**	6.7	0.65	**45**	6.5	0.63	**72**	6.9	0.66	**18**	6.6	0.64
Carbon Disulfide	75,000	1.3 UJ	1.3	0.74	1.3 U	1.3	0.75	1.3 U	1.3	0.73	1.4 U	1.4	0.77	1.3 U	1.3	0.74
1,1-Dichloroethene	81	1.3 UJ	1.3	0.44	1.3 U	1.3	0.45	1.3 U	1.3	0.44	1.4 U	1.4	0.46	1.3 U	1.3	0.44
1,1-Dichloroethane	710	1.3 U	1.3	0.27	1.3 U	1.3	0.27	1.3 U	1.3	0.27	1.4 U	1.4	0.28	1.3 U	1.3	0.27
trans-1,2-Dichloroethene	19,000	1.3 U	1.3	0.35	1.3 U	1.3	0.36	1.3 U	1.3	0.35	1.4 U	1.4	0.37	1.3 U	1.3	0.35
cis-1,2-Dichloroethene	2,600	1.3 U	1.3	0.32	1.3 U	1.3	0.32	1.3 U	1.3	0.31	1.4 U	1.4	0.33	1.3 U	1.3	0.32
Chloroform	200	1.3 U	1.3	0.31	1.3 U	1.3	0.31	1.3 U	1.3	0.31	1.4 U	1.4	0.32	1.3 U	1.3	0.31
1,2-Dichloroethane	70	1.3 U	1.3	0.25	1.3 U	1.3	0.26	1.3 U	1.3	0.25	1.4 U	1.4	0.26	1.3 U	1.3	0.25
2-Butanone	430,000	6.6 U	6.6	0.68	6.7 U	6.7	0.69	6.5 U	6.5	0.67	6.9 U	6.9	0.71	6.6 U	6.6	0.68
1,1,1-Trichloroethane	1,900,000	1.3 U	1.3	0.30	1.3 U	1.3	0.30	1.3 U	1.3	0.30	1.4 U	1.4	0.31	1.3 U	1.3	0.30
Carbon Tetrachloride	21	1.3 U	1.3	0.28	1.3 U	1.3	0.29	1.3 U	1.3	0.28	1.4 U	1.4	0.29	1.3 U	1.3	0.28
Vinyl Acetate	---	6.6 U	6.6	0.50	6.7 U	6.7	0.51	6.5 U	6.5	0.50	6.9 U	6.9	0.52	6.6 U	6.6	0.50
Bromodichloromethane	89	1.3 UJ	1.3	0.34	1.3 U	1.3	0.34	1.3 U	1.3	0.33	1.4 U	1.4	0.35	1.3 U	1.3	0.34
1,2-Dichloropropane	92	1.3 UJ	1.3	0.21	1.3 U	1.3	0.22	1.3 U	1.3	0.21	1.4 U	1.4	0.22	1.3 U	1.3	0.21
cis-1,3-Dichloropropene	---	1.3 UJ	1.3	0.30	1.3 U	1.3	0.30	1.3 U	1.3	0.30	1.4 U	1.4	0.31	1.3 U	1.3	0.30
Trichloroethene	51	1.3 UJ	1.3	0.28	1.3 U	1.3	0.28	1.3 U	1.3	0.28	1.4 U	1.4	0.29	1.3 U	1.3	0.28
Dibromochloromethane	---	1.3 U	1.3	0.35	1.3 U	1.3	0.36	1.3 U	1.3	0.35	1.4 U	1.4	0.37	1.3 U	1.3	0.35
1,1,2-Trichloroethane	73	1.3 U	1.3	0.38	1.3 U	1.3	0.38	1.3 U	1.3	0.37	1.4 U	1.4	0.39	1.3 U	1.3	0.38
Benzene	93	1.3 UJ	1.3	0.39	1.3 U	1.3	0.40	**2.1**	1.3	0.39	**1.6**	1.4	0.41	1.3 U	1.3	0.39
trans-1,3-Dichloropropene	---	1.3 U	1.3	0.28	1.3 U	1.3	0.29	1.3 U	1.3	0.28	1.4 U	1.4	0.30	1.3 U	1.3	0.28
2-Chloroethylvinylether	---	6.6 U	6.6	0.36	6.7 U	6.7	0.37	6.5 U	6.5	0.36	6.9 U	6.9	0.38	6.6 U	6.6	0.36
Bromoform	---	1.3 UJ	1.3	0.39	1.3 U	1.3	0.40	1.3 U	1.3	0.39	1.4 U	1.4	0.41	1.3 U	1.3	0.39
4-Methyl-2-Pentanone (MIBK)	170,000	6.6 U	6.6	0.55	6.7 U	6.7	0.56	6.5 U	6.5	0.55	6.9 U	6.9	0.58	6.6 U	6.6	0.55
2-Hexanone	32,000	6.6 U	6.6	0.58	6.7 U	6.7	0.59	6.5 U	6.5	0.57	6.9 U	6.9	0.60	6.6 U	6.6	0.58
Tetrachloroethene	260	1.3 UJ	1.3	0.34	1.3 U	1.3	0.35	1.3 U	1.3	0.34	1.4 U	1.4	0.35	1.3 U	1.3	0.34
1,1,2,2-Tetrachloroethane	13	1.3 UJ	1.3	0.33	1.3 U	1.3	0.34	1.3 U	1.3	0.33	1.4 U	1.4	0.35	1.3 U	1.3	0.33
Toluene	100,000	1.3 UJ	1.3	0.20	1.3 U	1.3	0.20	1.3 U	1.3	0.20	**1.5**	1.4	0.21	1.3 U	1.3	0.20
Chlorobenzene	26,000	1.3 UJ	1.3	0.29	1.3 U	1.3	0.29	1.3 U	1.3	0.29	1.4 U	1.4	0.30	1.3 U	1.3	0.29
Ethylbenzene	230	1.3 UJ	1.3	0.27	1.3 U	1.3	0.27	1.3 U	1.3	0.26	1.4 U	1.4	0.28	1.3 U	1.3	0.27
Styrene	16,000,000	1.3 UJ	1.3	0.18	1.3 U	1.3	0.19	1.3 U	1.3	0.18	1.4 U	1.4	0.19	1.3 U	1.3	0.18
Trichlorofluoromethane	200,000	1.3 U	1.3	0.35	1.3 U	1.3	0.36	1.3 U	1.3	0.35	1.4 U	1.4	0.37	1.3 U	1.3	0.35
1,1,2-Trichloro-1,2,2-trifuoroethane	1,000,000,000	2.6 UJ	2.6	0.38	2.7 U	2.7	0.39	2.6 U	2.6	0.37	2.8 U	2.8	0.40	2.6 U	2.6	0.38
m,p-Xylene	160,000	1.3 UJ	1.3	0.52	1.3 U	1.3	0.53	1.3 U	1.3	0.51	1.4 U	1.4	0.54	1.3 U	1.3	0.52
o-Xylene	200,000	1.3 UJ	1.3	0.30	1.3 U	1.3	0.30	1.3 U	1.3	0.29	1.4 U	1.4	0.31	1.3 U	1.3	0.30
1,2-Dichlorobenzene	68,000	1.3 UJ	1.3	0.39	1.3 U	1.3	0.39	1.3 U	1.3	0.38	1.4 U	1.4	0.40	1.3 U	1.3	0.39
1,3-Dichlorobenzene	3,840	1.3 UJ	1.3	0.30	1.3 U	1.3	0.31	1.3 U	1.3	0.30	1.4 U	1.4	0.31	1.3 U	1.3	0.30
1,4-Dichlorobenzene	3,500	1.3 UJ	1.3	0.31	1.3 U	1.3	0.31	1.3 U	1.3	0.30	1.4 U	1.4	0.32	1.3 U	1.3	0.31
Acrolein	---	66 U	66	5.0	67 U	67	5.1	65 U	65	5.0	69 U	69	5.2	66 U	66	5.0
Methyl Iodide	---	1.3 U	1.3	0.28	1.3 U	1.3	0.29	1.3 U	1.3	0.28	1.4 U	1.4	0.30	1.3 U	1.3	0.28
Bromoethane	---	2.6 U	2.6	0.58	2.7 U	2.7	0.59	2.6 U	2.6	0.57	2.8 U	2.8	0.61	2.6 U	2.6	0.58
Acrylonitrile	---	6.6 U	6.6	1.4	6.7 U	6.7	1.4	6.5 U	6.5	1.3	6.9 U	6.9	1.4	6.6 U	6.6	1.4
1,1-Dichloropropene	---	1.3 UJ	1.3	0.41	1.3 U	1.3	0.42	1.3 U	1.3	0.41	1.4 U	1.4	0.43	1.3 U	1.3	0.41
Dibromomethane	---	1.3 U	1.3	0.19	1.3 U	1.3	0.20	1.3 U	1.3	0.19	1.4 U	1.4	0.20	1.3 U	1.3	0.19
1,1,1,2-Tetrachloroethane	---	1.3 UJ	1.3	0.31	1.3 U	1.3	0.31	1.3 U	1.3	0.30	1.4 U	1.4	0.32	1.3 U	1.3	0.31
1,2-Dibromo-3-chloropropane	---	6.6 U	6.6	0.77	6.7 U	6.7	0.79	6.5 U	6.5	0.77	6.9 U	6.9	0.81	6.6 U	6.6	0.77
1,2,3-Trichloropropane	---	2.6 U	2.6	0.68	2.7 U	2.7	0.69	2.6 U	2.6	0.67	2.8 U	2.8	0.71	2.6 U	2.6	0.68
trans-1,4-Dichloro-2-butene	---	6.6 U	6.6	0.58	6.7 U	6.7	0.59	6.5 U	6.5	0.57	6.9 U	6.9	0.60	6.6 U	6.6	0.58
1,3,5-Trimethylbenzene	800,000	1.3 UJ	1.3	0.34	1.3 U	1.3	0.34	1.3 U	1.3	0.33	1.4 U	1.4	0.35	1.3 U	1.3	0.34
1,2,4-Trimethylbenzene	800,000	1.3 UJ	1.3	0.30	1.3 U	1.3	0.31	1.3 U	1.3	0.30	1.4 U	1.4	0.32	1.3 U	1.3	0.30
Hexachlorobutadiene	---	6.6 UJ	6.6	0.54	6.7 U	6.7	0.55	6.5 U	6.5	0.54	6.9 U	6.9	0.56	6.6 U	6.6	0.54

TABLE M-1
TEST PIT SOIL ANALYTICAL RESULTS
BOEING ISAACSON-THOMPSON
REMEDIAL INVESTIGATION

	Preliminary Cleanup Level	IT-TP-101-B(12-13) TT59A 10/24/2011			IT-TP-102-B(13-14) TT67B 10/25/2011			IT-TP-103-SWE(5-6) TT67C 10/25/2011			IT-TP-103-SWE(6-7) TT67D 10/25/2011			IT-TP-103-SWE(12-13) TT67E 10/25/2011		
		Result	Reporting Limit	Detection Limit	Result	Reporting Limit	Detection Limit	Result	Reporting Limit	Detection Limit	Result	Reporting Limit	Detection Limit	Result	Reporting Limit	Detection Limit
Ethylene Dibromide	---	1.3 U	1.3	0.23	1.3 U	1.3	0.24	1.3 U	1.3	0.23	1.4 U	1.4	0.24	1.3 U	1.3	0.23
Bromochloromethane	---	1.3 U	1.3	0.43	1.3 U	1.3	0.43	1.3 U	1.3	0.42	1.4 U	1.4	0.44	1.3 U	1.3	0.43
2,2-Dichloropropane	---	1.3 U	1.3	0.39	1.3 U	1.3	0.39	1.3 U	1.3	0.38	1.4 U	1.4	0.40	1.3 U	1.3	0.39
1,3-Dichloropropane	---	1.3 UJ	1.3	0.28	1.3 U	1.3	0.28	1.3 U	1.3	0.27	1.4 U	1.4	0.29	1.3 U	1.3	0.28
Isopropylbenzene	78,000	1.3 UJ	1.3	0.31	1.3 U	1.3	0.31	1.3 U	1.3	0.30	1.4 U	1.4	0.32	1.3 U	1.3	0.31
n-Propylbenzene	11,000	1.3 UJ	1.3	0.36	1.3 U	1.3	0.37	1.3 U	1.3	0.36	1.4 U	1.4	0.37	1.3 U	1.3	0.36
Bromobenzene	---	1.3 UJ	1.3	0.20	1.3 U	1.3	0.21	1.3 U	1.3	0.20	1.4 U	1.4	0.21	1.3 U	1.3	0.20
2-Chlorotoluene	---	1.3 UJ	1.3	0.40	1.3 U	1.3	0.40	1.3 U	1.3	0.39	1.4 U	1.4	0.41	1.3 U	1.3	0.40
4-Chlorotoluene	400,000	1.3 UJ	1.3	0.37	1.3 U	1.3	0.37	1.3 U	1.3	0.36	1.4 U	1.4	0.38	1.3 U	1.3	0.37
tert-Butylbenzene	---	1.3 UJ	1.3	0.40	1.3 U	1.3	0.41	1.3 U	1.3	0.40	1.4 U	1.4	0.42	1.3 U	1.3	0.40
sec-Butylbenzene	---	1.3 UJ	1.3	0.32	1.3 U	1.3	0.32	1.3 U	1.3	0.31	1.4 U	1.4	0.33	1.3 U	1.3	0.32
4-Isopropyltoluene	---	1.3 UJ	1.3	0.31	1.3 U	1.3	0.32	1.3 U	1.3	0.31	1.4 U	1.4	0.33	1.3 U	1.3	0.31
n-Butylbenzene	27,000	1.3 UJ	1.3	0.35	1.3 U	1.3	0.35	1.3 U	1.3	0.34	1.4 U	1.4	0.36	1.3 U	1.3	0.35
1,2,4-Trichlorobenzene	80	6.6 UJ	6.6	0.44	6.7 U	6.7	0.45	6.5 U	6.5	0.43	6.9 U	6.9	0.46	6.6 U	6.6	0.44
Naphthalene	2,100	6.6 UJ	6.6	0.57	6.7 U	6.7	0.58	6.5 U	6.5	0.56	6.9 U	6.9	0.59	6.6 U	6.6	0.57
1,2,3-Trichlorobenzene	---	6.6 UJ	6.6	0.40	6.7 U	6.7	0.41	6.5 U	6.5	0.40	6.9 U	6.9	0.42	6.6 U	6.6	0.40
SEMIVOLATILES (µg/kg)																
Method SW8270D																
Phenol	1,900,000	19 U	19	8.2	19 U	19	8.4	18 U	18	7.9	19 U	19	8.2	**12** J1	20	8.5
Bis-(2-Chloroethyl) Ether	---	19 U	19	3.2	19 U	19	3.3	18 U	18	3.1	19 U	19	3.2	20 U	20	3.3
2-Chlorophenol	---	19 U	19	2.3	19 U	19	2.3	18 U	18	2.2	19 U	19	2.3	20 U	20	2.3
1,3-Dichlorobenzene	3,840	19 U	19	2.5	19 U	19	2.6	18 U	18	2.4	19 U	19	2.5	20 U	20	2.6
1,4-Dichlorobenzene	3,500	19 U	19	2.7	19 U	19	2.8	18 U	18	2.6	19 U	19	2.7	20 U	20	2.8
Benzyl Alcohol	8,000,000	19 U	19	5.8	19 U	19	5.9	18 U	18	5.6	19 U	19	5.8	20 U	20	6.0
1,2-Dichlorobenzene	68,000	19 U	19	2.4	19 U	19	2.4	18 U	18	2.3	19 U	19	2.4	20 U	20	2.5
2-Methylphenol	250,000	19 U	19	5.0	19 U	19	5.1	18 U	18	4.8	19 U	19	5.0	20 U	20	5.1
2,2'-Oxybis(1-Chloropropane)	---	19 U	19	3.6	19 U	19	3.7	18 U	18	3.4	19 U	19	3.6	20 U	20	3.7
4-Methylphenol	41,000	38 U	38	6.3	39 U	39	6.4	37 U	37	6.1	38 U	38	6.3	39 U	39	6.5
N-Nitroso-Di-N-Propylamine	---	19 U	19	3.2	19 U	19	3.3	18 U	18	3.1	19 U	19	3.2	20 U	20	3.3
Hexachloroethane	---	19 U	19	2.8	19 U	19	2.9	18 U	18	2.7	19 U	19	2.8	20 U	20	2.9
Nitrobenzene	---	19 U	19	3.8	19 U	19	3.9	18 U	18	3.7	19 U	19	3.9	20 U	20	4.0
Isophorone	---	19 U	19	2.7	19 U	19	2.8	18 U	18	2.6	19 U	19	2.7	20 U	20	2.8
2-Nitrophenol	---	94 U	94	37	97 U	97	38	92 U	92	35	95 U	95	37	98 U	98	38
2,4-Dimethylphenol	95,000	38 U	38	3.3	39 U	39	3.4	37 U	37	3.2	38 U	38	3.3	39 U	39	3.4
Benzoic Acid	9,000	380 UJ	380	95	390 UJ	390	98	370 UJ	370	92	380 UJ	380	96	390 UJ	390	99
bis(2-Chloroethoxy) Methane	---	19 U	19	1.9	19 U	19	1.9	18 U	18	1.8	19 U	19	1.9	20 U	20	2.0
2,4-Dichlorophenol	---	190 U	190	20	190 U	190	21	180 U	180	20	190 U	190	20	200 U	200	21
1,2,4-Trichlorobenzene	80	19 U	19	3.3	19 U	19	3.4	18 U	18	3.2	19 U	19	3.3	20 U	20	3.4
Naphthalene	2,100	19 U	19	2.6	19 U	19	2.7	**60**	18	2.5	**64**	19	2.6	20 U	20	2.7
4-Chloroaniline	---	260 U	260	21	260 U	260	22	250 U	250	20	260 U	260	21	260 U	260	22
Hexachlorobutadiene	---	94 U	94	4.3	97 U	97	4.4	92 U	92	4.2	95 U	95	4.3	98 U	98	4.5
4-Chloro-3-methylphenol	740,000	94 U	94	14	97 U	97	15	92 U	92	14	95 U	95	14	98 U	98	15
2-Methylnaphthalene	320,000	19 U	19	2.9	19 U	19	3.0	**15** J1	18	2.8	**44**	19	2.9	20 U	20	3.0
Hexachlorocyclopentadiene	---	380 UJ	380	63	390 UJ	390	65	370 UJ	370	61	380 UJ	380	63	390 UJ	390	65
2,4,6-Trichlorophenol	---	94 U	94	21	97 U	97	22	92 U	92	20	95 U	95	21	98 U	98	22
2,4,5-Trichlorophenol	---	94 U	94	20	97 U	97	21	92 U	92	20	95 U	95	20	98 U	98	21
2-Chloronaphthalene	---	19 U	19	2.5	19 U	19	2.6	18 U	18	2.4	19 U	19	2.5	20 U	20	2.6
2-Nitroaniline	---	94 U	94	17	97 U	97	18	92 U	92	17	95 U	95	17	98 U	98	18
Dimethylphthalate	71	19 U	19	2.7	19 U	19	2.8	18 U	18	2.7	19 U	19	2.8	20 U	20	2.8
Acenaphthylene	---	19 U	19	5.4	19 U	19	5.5	**11** J1	18	5.2	**12** J1	19	5.4	20 U	20	5.6
3-Nitroaniline	---	94 U	94	21	97 U	97	22	92 U	92	21	95 U	95	21	98 U	98	22
Acenaphthene	230,000	19 U	19	3.1	19 U	19	3.2	18 U	18	3.0	19 U	19	3.1	20 U	20	3.2
2,4-Dinitrophenol	---	800 UJ	800	100	830 UJ	830	110	780 UJ	780	100	810 UJ	810	110	830 UJ	830	110
4-Nitrophenol	---	94 UJ	94	33	97 UJ	97	34	92 UJ	92	32	95 UJ	95	33	98 UJ	98	34
Dibenzofuran	80,000	19 U	19	3.9	19 U	19	4.0	**12** J1	18	3.8	**16** J1	19	3.9	20 U	20	4.0
2,6-Dinitrotoluene	---	94 U	94	29	97 U	97	30	92 U	92	28	95 U	95	29	98 U	98	30

TABLE M-1
TEST PIT SOIL ANALYTICAL RESULTS
BOEING ISAACSON-THOMPSON
REMEDIAL INVESTIGATION

	Preliminary Cleanup Level	IT-TP-101-B(12-13) TT59A 10/24/2011			IT-TP-102-B(13-14) TT67B 10/25/2011			IT-TP-103-SWE(5-6) TT67C 10/25/2011			IT-TP-103-SWE(6-7) TT67D 10/25/2011			IT-TP-103-SWE(12-13) TT67E 10/25/2011		
		Result	Reporting Limit	Detection Limit	Result	Reporting Limit	Detection Limit	Result	Reporting Limit	Detection Limit	Result	Reporting Limit	Detection Limit	Result	Reporting Limit	Detection Limit
2,4-Dinitrotoluene	---	94 U	94	18	97 U	97	19	92 U	92	18	95 U	95	19	98 U	98	19
Diethylphthalate	178,000	47 U	47	35	49 U	49	36	46 U	46	33	48 U	48	35	49 U	49	36
4-Chlorophenyl-phenylether	---	19 U	19	5	19 U	19	5.1	18 U	18	4.8	19 U	19	5.0	20 U	20	5.2
Fluorene	150,000	19 U	19	4.1	19 U	19	4.2	18 U	18	4.0	19 U	19	4.1	20 U	20	4.3
4-Nitroaniline	---	94 U	94	36	97 U	97	37	92 U	92	35	95 U	95	36	98 U	98	37
4,6-Dinitro-2-Methylphenol	---	190 U	190	20	190 U	190	21	180 U	180	19	190 U	190	20	200 U	200	21
N-Nitrosodiphenylamine	204,000	19 U	19	5.1	19 U	19	5.2	18 U	18	4.9	19 U	19	5.1	20 U	20	5.3
4-Bromophenyl-phenylether	---	19 U	19	4.8	19 U	19	4.9	18 U	18	4.6	19 U	19	4.8	20 U	20	4.9
Hexachlorobenzene	---	19 U	19	4.1	19 U	19	4.2	18 U	18	3.9	19 U	19	4.1	20 U	20	4.2
Pentachlorophenol	---	190 UJ	190	46	190 UJ	190	47	180 UJ	180	44	190 UJ	190	46	200 UJ	200	48
Phenanthrene	---	19 U	19	3.4	19 U	19	3.5	**66**	18	3.3	**77**	19	3.5	20 U	20	3.6
Carbazole	50,000	19 U	19	2.5	19 U	19	2.6	18 U	18	2.5	19 U	19	2.6	20 U	20	2.6
Anthracene	1,600,000	19 U	19	4.3	19 U	19	4.4	18 U	18	4.1	19 U	19	4.3	20 U	20	4.4
Di-n-Butylphthalate	26,000	19 U	19	7.7	19 U	19	7.9	18 U	18	7.5	19 U	19	7.8	20 U	20	8.0
Fluoranthene	230,000	19 U	19	2.8	19 U	19	2.8	**73**	18	2.7	**69**	19	2.8	20 U	20	2.9
Pyrene	240,000	19 U	19	1.8	19 U	19	1.9	**72**	18	1.8	**68**	19	1.8	20 U	20	1.9
Butylbenzylphthalate	1,700	19 U	19	5.8	19 U	19	6.0	18 U	18	5.6	19 U	19	5.8	20 U	20	6.0
3,3'-Dichlorobenzidine	---	140 UJ	140	17	150 U	150	17	140 U	140	16	140 U	140	17	150 U	150	17
Benzo(a)anthracene	---	19 U	19	3.1	19 U	19	3.2	**25**	18	3.0	**21**	19	3.1	20 U	20	3.2
bis(2-Ethylhexyl)phthalate	56,600	24 U	24	14	24 U	24	14	23 U	23	13	30 U	24	14	35 U	24	14
Chrysene	---	19 U	19	3.5	19 U	19	3.6	**54**	18	3.4	**46**	19	3.6	20 U	20	3.7
Di-n-Octyl phthalate	---	19 U	19	5.5	19 U	19	5.7	18 U	18	5.3	19 U	19	5.6	20 U	20	5.7
Benzo(a)pyrene	---	19 U	19	5.2	19 U	19	5.3	**54**	18	5.0	**23**	19	5.2	20 U	20	5.3
Indeno(1,2,3-cd)pyrene	---	19 U	19	4.4	19 U	19	4.5	**110**	18	4.3	**26**	19	4.4	20 U	20	4.6
Dibenz(a,h)anthracene	---	19 U	19	4.1	19 U	19	4.2	**14** J1	18	3.9	19 U	19	4.1	20 U	20	4.2
Benzo(g,h,i)perylene	---	19 U	19	4.2	19 U	19	4.3	**240**	18	4.0	**47**	19	4.2	20 U	20	4.3
1-Methylnaphthalene	16,000	19 U	19	2.5	19 U	19	2.6	**11** J1	18	2.5	**28**	19	2.5	20 U	20	2.6
Total Benzofluoranthenes	---	19 U	19	2.6	19 U	19	2.7	**140**	18	2.5	**61**	19	2.6	20 U	20	2.7
cPAH TEQ	15	ND	NA	NA	ND	NA	NA	**83** J	NA	NA	**34**	NA	NA	ND	NA	NA
PAHs (µg/kg)																
Method SW8270D-SIM																
Naphthalene	2,100	**2.6** J1	4.7	2.5	**3.2** J1	4.6	2.4	**55**	4.6	2.4	**110**	4.8	2.5	**2.7** J1	4.8	2.5
2-Methylnaphthalene	320,000	4.7 U	4.7	1.4	4.6 U	4.6	1.4	**14**	4.6	1.4	**94**	4.8	1.5	4.8 U	4.8	1.4
1-Methylnaphthalene	16,000	4.7 U	4.7	1.6	4.6 U	4.6	1.6	**9.9**	4.6	1.6	**72**	4.8	1.6	4.8 U	4.8	1.6
Total Naphthalenes	---	**2.6**	NA	NA	**3.2** J1	NA	NA	**78.9**	NA	NA	**276**	NA	NA	**2.7** J1	NA	NA
Acenaphthylene	---	4.7 U	4.7	1.2	4.6 U	4.6	1.2	**8.7**	4.6	1.2	**13**	4.8	1.2	4.8 U	4.8	1.2
Acenaphthene	230,000	4.7 U	4.7	1.2	4.6 U	4.6	1.2	**3.5** J1	4.6	1.2	**19**	4.8	1.3	4.8 U	4.8	1.3
Fluorene	150,000	4.7 U	4.7	1.2	4.6 U	4.6	1.2	**2.6** J1	4.6	1.2	**4.8**	4.8	1.2	4.8 U	4.8	1.2
Phenanthrene	---	**5.0**	4.7	1.8	**4.4** J1	4.6	1.8	**69**	4.6	1.8	**120**	4.8	1.9	**4.6** J1	4.8	1.9
Anthracene	1,600,000	4.7 U	4.7	1.4	4.6 U	4.6	1.3	**71**	4.6	1.3	**120**	4.8	1.4	4.8 U	4.8	1.4
Fluoranthene	230,000	**3.0** J1	4.7	1.7	4.6 U	4.6	1.6	**83**	4.6	1.6	**110**	4.8	1.7	4.8 U	4.8	1.7
Pyrene	240,000	**3.3** J1	4.7	2.1	4.6 U	4.6	2.0	**70**	4.6	2.0	**95**	4.8	2.1	4.8 U	4.8	2.1
Benzo(a)anthracene	---	4.7 U	4.7	1.5	4.6 U	4.6	1.5	**26**	4.6	1.5	**35**	4.8	1.5	4.8 U	4.8	1.5
Chrysene	---	4.7 U	4.7	1.8	4.6 U	4.6	1.7	**53**	4.6	1.7	**69**	4.8	1.8	4.8 U	4.8	1.8
Benzo(a)pyrene	---	4.7 U	4.7	1.6	4.6 U	4.6	1.6	**40**	4.6	1.6	**34**	4.8	1.7	4.8 U	4.8	1.7
Indeno(1,2,3-cd)pyrene	---	4.7 U	4.7	3.2	4.6 U	4.6	3.2	**70**	4.6	3.2	**40**	4.8	3.3	4.8 U	4.8	3.3
Dibenz(a,h)anthracene	---	4.7 U	4.7	2.2	4.6 U	4.6	2.2	**17**	4.6	2.2	**12**	4.8	2.3	4.8 U	4.8	2.3
Benzo(g,h,i)perylene	---	4.7 U	4.7	2.8	4.6 U	4.6	2.8	**130**	4.6	2.8	**67**	4.8	2.9	4.8 U	4.8	2.9
Dibenzofuran	80,000	4.7 U	4.7	1.4	4.6 U	4.6	1.4	**12**	4.6	1.4	**30**	4.8	1.4	4.8 U	4.8	1.4
Total Benzofluoranthenes	---	4.7 U	4.7	1.7	4.6 U	4.6	1.7	**100**	4.6	1.7	**90**	4.8	1.8	4.8 U	4.8	1.8
cPAH TEQ	15	ND	NA	NA	ND	NA	NA	**62**	NA	NA	**52**	NA	NA	ND	NA	NA

TABLE M-1
TEST PIT SOIL ANALYTICAL RESULTS
BOEING ISAACSON-THOMPSON
REMEDIAL INVESTIGATION

	Preliminary Cleanup Level	IT-TP-101-B(12-13) TT59A 10/24/2011			IT-TP-102-B(13-14) TT67B 10/25/2011			IT-TP-103-SWE(5-6) TT67C 10/25/2011			IT-TP-103-SWE(6-7) TT67D 10/25/2011			IT-TP-103-SWE(12-13) TT67E 10/25/2011		
		Result	Reporting Limit	Detection Limit	Result	Reporting Limit	Detection Limit	Result	Reporting Limit	Detection Limit	Result	Reporting Limit	Detection Limit	Result	Reporting Limit	Detection Limit
PCBs (µg/kg)																
Method SW8082																
Aroclor 1016	0.72	33 U	33	2.0	34 U	34	2.1	37 U	37	2.2	29 U	29	1.8	36 U	36	2.2
Aroclor 1242	0.72	33 U	33	2.4	34 U	34	2.5	37 U	37	2.7	29 U	29	2.2	36 U	36	2.7
Aroclor 1248	220	33 U	33	2.4	34 U	34	2.5	37 U	37	2.7	29 U	29	2.2	36 U	36	2.7
Aroclor 1254	0.29	33 U	33	2.4	34 U	34	2.5	37 U	37	2.7	29 U	29	2.2	36 U	36	2.7
Aroclor 1260	5.4	33 U	33	2.4	34 U	34	2.5	37 U	37	2.7	29 U	29	2.2	36 U	36	2.7
Aroclor 1221	---	33 U	33	2.4	34 U	34	2.5	37 U	37	2.7	29 U	29	2.2	36 U	36	2.7
Aroclor 1232	---	33 U	33	2.4	34 U	34	2.5	37 U	37	2.7	29 U	29	2.2	36 U	36	2.7
Total PCBs	1.8	ND	NA	NA	ND	NA	NA	ND	NA	NA	ND	NA	NA	ND	NA	NA
TOTAL PETROLEUM HYDROCARBONS (mg/kg)																
NWTPH-Dx																
Diesel-Range Organics	2,000	6.5 U	6.5	1.7	6.8 U	6.8	1.7	**11**	6.0	1.5	**15**	6.2	1.6	6.8 U	6.8	1.7
Oil-Range Organics	2,000	13 U	13	2.0	14 U	14	2.1	**58**	12	1.9	**57**	12	1.9	14 U	14	2.1
NWTPH-G																
Gasoline-Range Organics	100/30	8.3 U	8.3	4.0	8.8 U	8.8	4.2	8.1 U	8.1	3.9	5.1 U	5.1	2.5	8.9 U	8.9	4.3
TOTAL METALS (mg/kg)																
Methods 200.8/7471A/SW7196A																
Antimony	5	0.3 UJ	0.3	0.017	0.3 U	0.3	0.017	0.2 U	0.2	0.015	0.2 U	0.2	0.015	0.3 U	0.3	0.017
Arsenic	7	**2.4**	0.3	0.11	**1.2**	0.3	0.11	**7.1**	0.2	0.10	**5.1**	0.2	0.10	**1.5**	0.3	0.11
Barium	640	**37.4**	0.6	0.072	**31**	2	0.18	**202**	1	0.16	**158**	0.6	0.067	**27.0**	0.6	0.072
Beryllium	160	0.3 U	0.3	0.023	0.3 U	0.3	0.023	0.2 U	0.2	0.021	**0.3**	0.2	0.021	0.3 U	0.3	0.023
Cadmium	1.3	0.1 U	0.1	0.015	0.1 U	0.1	0.016	**0.4**	0.1	0.014	**0.2**	0.1	0.014	0.1 U	0.1	0.015
Chromium	1,480	**12.0**	0.6	0.049	**11.7**	0.6	0.049	**14.3**	0.6	0.045	**13.3**	0.6	0.045	**9.4**	0.6	0.049
Chromium VI	3.8	0.550 U	0.550	0.030	0.540 U	0.540	0.030	0.480 U	0.480	0.030	0.473 U	0.473	0.030	0.531 U	0.531	0.030
Copper	36	**18.9**	0.6	0.046	**14.1**	0.6	0.047	**48.4**	0.6	0.042	**62.8**	0.6	0.043	**16.8**	0.6	0.046
Lead	250	**2.3**	0.1	0.060	**1.7**	0.1	0.061	**90.5**	0.1	0.055	**49.9**	0.1	0.056	**1.7**	0.1	0.060
Mercury	1.5	0.02 U	0.02	0.0012	0.03 U	0.03	0.0016	**0.05**	0.02	0.0011	**0.10**	0.02	0.0012	0.03 U	0.03	0.0014
Nickel	210	**9.0**	0.6	0.063	**7.9**	0.6	0.063	**15.2**	0.6	0.058	**15.1**	0.6	0.058	**6.0**	0.6	0.063
Selenium	1.0	0.6 U	0.6	0.13	0.6 U	0.6	0.13	0.6 U	0.6	0.12	0.6 U	0.6	0.12	0.6 U	0.6	0.13
Silver	170	0.3 U	0.3	0.010	0.3 U	0.3	0.010	0.2 U	0.2	0.0094	0.2 U	0.2	0.0095	0.3 U	0.3	0.010
Thallium	0.67	0.3 U	0.3	0.0038	0.3 U	0.3	0.0039	0.2 U	0.2	0.0035	0.2 U	0.2	0.0036	0.3 U	0.3	0.0039
Zinc	1,400	**25**	5	0.43	**25**	5	0.44	**150**	5	0.40	**99**	5	0.40	**22**	5	0.44

TABLE M-1
TEST PIT SOIL ANALYTICAL RESULTS
BOEING ISAACSON-THOMPSON
REMEDIAL INVESTIGATION

	Preliminary Cleanup Level	IT-TP-104-B(12-13) TU13A 10/27/2011			IT-TP-105B-B(11-12) TU13B 10/27/2011			IT-TP-106B(11-12) TU48J 10/28/2011			IT-TP-107-B(11-12) TU01F 10/26/2011			IT-TP-107-SWN(1-2) TU01A 10/26/2011		
		Result	Reporting Limit	Detection Limit	Result	Reporting Limit	Detection Limit	Result	Reporting Limit	Detection Limit	Result	Reporting Limit	Detection Limit	Result	Reporting Limit	Detection Limit
VOLATILES (µg/kg)																
Method SW8260C																
Chloromethane	1,600	1.3 U	1.3	0.34	1.3 U	1.3	0.35	1.5 U	1.5	0.38	1.3 U	1.3	0.35	1.2 U	1.2	0.31
Bromomethane	---	1.3 U	1.3	0.24	1.3 U	1.3	0.25	1.5 UJ	1.5	0.27	1.3 U	1.3	0.25	1.2 U	1.2	0.22
Vinyl Chloride	7.4	1.3 U	1.3	0.30	1.3 U	1.3	0.31	1.5 U	1.5	0.34	1.3 U	1.3	0.31	1.2 U	1.2	0.28
Chloroethane	280,000	1.3 U	1.3	0.59	1.3 U	1.3	0.61	1.5 U	1.5	0.67	1.3 U	1.3	0.61	1.2 U	1.2	0.54
Methylene Chloride	2400	2.6 U	2.6	0.82	2.7 U	2.7	0.84	**12**	2.9	0.92	**3.2** J	2.6	0.84	2.4 U	2.4	0.75
Acetone	510,000	**30** J	6.4	0.62	**36** J	6.6	0.64	**43** J	7.3	0.7	**44** J	6.6	0.63	**130** J	5.9	0.57
Carbon Disulfide	75,000	**4.7**	1.3	0.72	**4.2**	1.3	0.74	**3.4** J	1.5	0.81	1.3 U	1.3	0.74	1.2 U	1.2	0.66
1,1-Dichloroethene	81	1.3 U	1.3	0.43	1.3 U	1.3	0.45	1.5 UJ	1.5	0.49	1.3 U	1.3	0.44	1.2 U	1.2	0.40
1,1-Dichloroethane	710	1.3 U	1.3	0.26	1.3 U	1.3	0.27	1.5 U	1.5	0.30	1.3 U	1.3	0.27	1.2 U	1.2	0.24
trans-1,2-Dichloroethene	19,000	1.3 U	1.3	0.34	1.3 U	1.3	0.35	1.5 U	1.5	0.39	1.3 U	1.3	0.35	1.2 U	1.2	0.31
cis-1,2-Dichloroethene	2,600	1.3 U	1.3	0.31	1.3 U	1.3	0.32	1.5 U	1.5	0.35	1.3 U	1.3	0.32	1.2 U	1.2	0.28
Chloroform	200	1.3 U	1.3	0.30	1.3 U	1.3	0.31	1.5 U	1.5	0.34	1.3 U	1.3	0.31	1.2 U	1.2	0.28
1,2-Dichloroethane	70	1.3 U	1.3	0.25	1.3 U	1.3	0.25	1.5 U	1.5	0.28	1.3 U	1.3	0.25	1.2 U	1.2	0.23
2-Butanone	430,000	6.4 U	6.4	0.66	6.6 U	6.6	0.68	**5.0** J1	7.3	0.75	6.6 U	6.6	0.68	**14**	5.9	0.60
1,1,1-Trichloroethane	1,900,000	1.3 U	1.3	0.29	1.3 U	1.3	0.30	1.5 U	1.5	0.33	1.3 U	1.3	0.30	1.2 U	1.2	0.27
Carbon Tetrachloride	21	1.3 U	1.3	0.27	1.3 U	1.3	0.28	1.5 U	1.5	0.31	1.3 U	1.3	0.28	1.2 U	1.2	0.25
Vinyl Acetate	---	6.4 U	6.4	0.49	6.6 U	6.6	0.51	7.3 U	7.3	0.55	6.6 U	6.6	0.50	5.9 U	5.9	0.45
Bromodichloromethane	89	1.3 U	1.3	0.33	1.3 U	1.3	0.34	1.5 U	1.5	0.37	1.3 U	1.3	0.33	1.2 U	1.2	0.30
1,2-Dichloropropane	92	1.3 U	1.3	0.21	1.3 U	1.3	0.21	1.5 U	1.5	0.24	1.3 U	1.3	0.21	1.2 U	1.2	0.19
cis-1,3-Dichloropropene	---	1.3 U	1.3	0.29	1.3 U	1.3	0.30	1.5 U	1.5	0.33	1.3 U	1.3	0.30	1.2 U	1.2	0.27
Trichloroethene	51	1.3 U	1.3	0.27	1.3 U	1.3	0.28	1.5 U	1.5	0.31	1.3 U	1.3	0.28	1.2 U	1.2	0.25
Dibromochloromethane	---	1.3 U	1.3	0.34	1.3 U	1.3	0.35	1.5 U	1.5	0.39	1.3 U	1.3	0.35	1.2 U	1.2	0.31
1,1,2-Trichloroethane	73	1.3 U	1.3	0.37	1.3 U	1.3	0.38	1.5 U	1.5	0.42	1.3 U	1.3	0.38	1.2 U	1.2	0.34
Benzene	93	1.3 U	1.3	0.38	1.3 U	1.3	0.39	1.5 U	1.5	0.43	**1.1** J1	1.3	0.39	**0.7** J1	1.2	0.35
trans-1,3-Dichloropropene	---	1.3 U	1.3	0.28	1.3 U	1.3	0.29	1.5 U	1.5	0.31	1.3 U	1.3	0.28	1.2 U	1.2	0.25
2-Chloroethylvinylether	---	6.4 U	6.4	0.35	6.6 U	6.6	0.37	7.3 U	7.3	0.40	6.6 U	6.6	0.36	5.9 U	5.9	0.33
Bromoform	---	1.3 U	1.3	0.38	1.3 U	1.3	0.39	1.5 U	1.5	0.43	1.3 U	1.3	0.39	1.2 U	1.2	0.35
4-Methyl-2-Pentanone (MIBK)	170,000	6.4 U	6.4	0.54	6.6 U	6.6	0.56	7.3 U	7.3	0.61	6.6 U	6.6	0.55	5.9 U	5.9	0.50
2-Hexanone	32,000	6.4 U	6.4	0.56	6.6 U	6.6	0.58	7.3 U	7.3	0.64	6.6 U	6.6	0.58	5.9 U	5.9	0.52
Tetrachloroethene	260	1.3 U	1.3	0.33	1.3 U	1.3	0.34	1.5 U	1.5	0.37	1.3 U	1.3	0.34	1.2 U	1.2	0.30
1,1,2,2-Tetrachloroethane	13	1.3 U	1.3	0.33	1.3 U	1.3	0.34	1.5 U	1.5	0.37	1.3 U	1.3	0.33	1.2 U	1.2	0.30
Toluene	100,000	1.3 U	1.3	0.19	1.3 U	1.3	0.20	1.5 U	1.5	0.22	1.3 U	1.3	0.20	**1.9**	1.2	0.18
Chlorobenzene	26,000	1.3 U	1.3	0.28	1.3 U	1.3	0.29	1.5 UJ	1.5	0.32	1.3 U	1.3	0.29	1.2 U	1.2	0.26
Ethylbenzene	230	1.3 U	1.3	0.26	1.3 U	1.3	0.27	1.5 U	1.5	0.29	1.3 U	1.3	0.27	1.2 U	1.2	0.24
Styrene	16,000,000	1.3 U	1.3	0.18	1.3 U	1.3	0.18	1.5 UJ	1.5	0.20	1.3 U	1.3	0.18	1.2 U	1.2	0.16
Trichlorofluoromethane	200,000	1.3 U	1.3	0.34	1.3 U	1.3	0.35	1.5 U	1.5	0.39	1.3 U	1.3	0.35	1.2 U	1.2	0.31
1,1,2-Trichloro-1,2,2-trifuoroethane	1,000,000,000	2.6 U	2.6	0.37	2.7 U	2.7	0.38	2.9 UJ	2.9	0.42	2.6 U	2.6	0.38	2.4 U	2.4	0.34
m,p-Xylene	160,000	1.3 U	1.3	0.50	1.3 U	1.3	0.52	1.5 U	1.5	0.57	1.3 U	1.3	0.52	**0.6** J1	1.2	0.46
o-Xylene	200,000	1.3 U	1.3	0.29	1.3 U	1.3	0.30	1.5 U	1.5	0.33	1.3 U	1.3	0.29	1.2 U	1.2	0.26
1,2-Dichlorobenzene	68,000	1.3 U	1.3	0.38	1.3 U	1.3	0.39	1.5 UJ	1.5	0.43	1.3 U	1.3	0.39	1.2 U	1.2	0.35
1,3-Dichlorobenzene	3,840	1.3 U	1.3	0.29	1.3 U	1.3	0.30	1.5 UJ	1.5	0.33	1.3 U	1.3	0.30	**0.6** J1	1.2	0.27
1,4-Dichlorobenzene	3,500	1.3 U	1.3	0.30	1.3 U	1.3	0.31	1.5 UJ	1.5	0.34	1.3 U	1.3	0.31	**0.7** J1	1.2	0.27
Acrolein	---	64 U	64	4.9	66 U	66	5.1	73 U	73	5.5	66 U	66	5.0	59 U	59	4.5
Methyl Iodide	---	1.3 U	1.3	0.28	1.3 U	1.3	0.29	1.5 U	1.5	0.31	1.3 U	1.3	0.28	1.2 U	1.2	0.25
Bromoethane	---	2.6 U	2.6	0.57	2.7 U	2.7	0.58	2.9 U	2.9	0.64	2.6 U	2.6	0.58	2.4 U	2.4	0.52
Acrylonitrile	---	6.4 U	6.4	1.3	6.6 U	6.6	1.4	7.3 U	7.3	1.5	6.6 U	6.6	1.4	5.9 U	5.9	1.2
1,1-Dichloropropene	---	1.3 U	1.3	0.40	1.3 U	1.3	0.41	1.5 U	1.5	0.45	1.3 U	1.3	0.41	1.2 U	1.2	0.37
Dibromomethane	---	1.3 U	1.3	0.19	1.3 U	1.3	0.19	1.5 U	1.5	0.21	1.3 U	1.3	0.19	1.2 U	1.2	0.17
1,1,1,2-Tetrachloroethane	---	1.3 U	1.3	0.30	1.3 U	1.3	0.31	1.5 U	1.5	0.34	1.3 U	1.3	0.31	1.2 U	1.2	0.27
1,2-Dibromo-3-chloropropane	---	6.4 U	6.4	0.75	6.6 U	6.6	0.78	7.3 U	7.3	0.85	6.6 U	6.6	0.77	5.9 U	5.9	0.69
1,2,3-Trichloropropane	---	2.6 U	2.6	0.66	2.7 U	2.7	0.69	2.9 U	2.9	0.75	2.6 U	2.6	0.68	2.4 U	2.4	0.61
trans-1,4-Dichloro-2-butene	---	6.4 U	6.4	0.56	6.6 U	6.6	0.58	7.3 U	7.3	0.64	6.6 U	6.6	0.58	5.9 U	5.9	0.52
1,3,5-Trimethylbenzene	800,000	1.3 U	1.3	0.33	1.3 U	1.3	0.34	1.5 U	1.5	0.37	1.3 U	1.3	0.33	1.2 U	1.2	0.30
1,2,4-Trimethylbenzene	800,000	1.3 U	1.3	0.30	1.3 U	1.3	0.31	1.5 U	1.5	0.33	1.3 U	1.3	0.30	**1.3**	1.2	0.27
Hexachlorobutadiene	---	6.4 U	6.4	0.53	6.6 U	6.6	0.54	7.3 UJ	7.3	0.60	6.6 U	6.6	0.54	5.9 U	5.9	0.48

TABLE M-1
TEST PIT SOIL ANALYTICAL RESULTS
BOEING ISAACSON-THOMPSON
REMEDIAL INVESTIGATION

	Preliminary Cleanup Level	IT-TP-104-B(12-13) TU13A 10/27/2011			IT-TP-105B-B(11-12) TU13B 10/27/2011			IT-TP-106B(11-12) TU48J 10/28/2011			IT-TP-107-B(11-12) TU01F 10/26/2011			IT-TP-107-SWN(1-2) TU01A 10/26/2011		
		Result	Reporting Limit	Detection Limit	Result	Reporting Limit	Detection Limit	Result	Reporting Limit	Detection Limit	Result	Reporting Limit	Detection Limit	Result	Reporting Limit	Detection Limit
Ethylene Dibromide	---	1.3 U	1.3	0.23	1.3 U	1.3	0.23	1.5 U	1.5	0.26	1.3 U	1.3	0.23	1.2 U	1.2	0.21
Bromochloromethane	---	1.3 U	1.3	0.42	1.3 U	1.3	0.43	1.5 U	1.5	0.47	1.3 U	1.3	0.42	1.2 U	1.2	0.38
2,2-Dichloropropane	---	1.3 U	1.3	0.38	1.3 U	1.3	0.39	1.5 U	1.5	0.42	1.3 U	1.3	0.38	1.2 U	1.2	0.34
1,3-Dichloropropane	---	1.3 U	1.3	0.27	1.3 U	1.3	0.28	1.5 U	1.5	0.30	1.3 U	1.3	0.28	1.2 U	1.2	0.25
Isopropylbenzene	78,000	1.3 U	1.3	0.30	1.3 U	1.3	0.31	1.5 U	1.5	0.34	1.3 U	1.3	0.31	1.2 U	1.2	0.27
n-Propylbenzene	11,000	1.3 U	1.3	0.35	1.3 U	1.3	0.36	1.5 UJ	1.5	0.40	1.3 U	1.3	0.36	1.2 U	1.2	0.32
Bromobenzene	---	1.3 U	1.3	0.20	1.3 U	1.3	0.20	1.5 UJ	1.5	0.22	1.3 U	1.3	0.20	1.2 U	1.2	0.18
2-Chlorotoluene	---	1.3 U	1.3	0.39	1.3 U	1.3	0.40	1.5 UJ	1.5	0.44	1.3 U	1.3	0.39	1.2 U	1.2	0.35
4-Chlorotoluene	400,000	1.3 U	1.3	0.36	1.3 U	1.3	0.37	1.5 UJ	1.5	0.40	1.3 U	1.3	0.36	1.2 U	1.2	0.33
tert-Butylbenzene	---	1.3 U	1.3	0.39	1.3 U	1.3	0.41	1.5 UJ	1.5	0.44	1.3 U	1.3	0.40	1.2 U	1.2	0.36
sec-Butylbenzene	---	1.3 U	1.3	0.31	1.3 U	1.3	0.32	1.5 UJ	1.5	0.35	1.3 U	1.3	0.32	1.2 U	1.2	0.28
4-Isopropyltoluene	---	1.3 U	1.3	0.30	1.3 U	1.3	0.31	1.5 U	1.5	0.34	1.3 U	1.3	0.31	**3.2**	1.2	0.28
n-Butylbenzene	27,000	1.3 U	1.3	0.34	1.3 U	1.3	0.35	1.5 UJ	1.5	0.38	1.3 U	1.3	0.34	**0.6** J1	1.2	0.31
1,2,4-Trichlorobenzene	80	6.4 U	6.4	0.43	6.6 U	6.6	0.44	7.3 UJ	7.3	0.48	6.6 U	6.6	0.44	5.9 U	5.9	0.39
Naphthalene	2,100	6.4 U	6.4	0.55	6.6 U	6.6	0.57	7.3 U	7.3	0.62	6.6 U	6.6	0.56	**2.6** J1	5.9	0.51
1,2,3-Trichlorobenzene	---	6.4 U	6.4	0.39	6.6 U	6.6	0.40	7.3 UJ	7.3	0.44	6.6 U	6.6	0.40	5.9 U	5.9	0.36
SEMIVOLATILES (µg/kg)																
Method SW8270D																
Phenol	1,900,000	19 U	19	8.3	20 U	20	8.4	19 U	19	8.1	20 U	20	8.4	290 U	290	130
Bis-(2-Chloroethyl) Ether	---	19 U	19	3.2	20 U	20	3.3	19 U	19	3.1	20 U	20	3.3	290 U	290	49
2-Chlorophenol	---	19 U	19	2.3	20 U	20	2.3	19 U	19	2.2	20 U	20	2.3	290 U	290	35
1,3-Dichlorobenzene	3,840	19 U	19	2.5	20 U	20	2.6	19 U	19	2.5	20 U	20	2.6	290 U	290	38
1,4-Dichlorobenzene	3,500	19 U	19	2.8	20 U	20	2.8	19 U	19	2.7	20 U	20	2.8	290 U	290	42
Benzyl Alcohol	8,000,000	19 U	19	5.9	20 U	20	5.9	19 U	19	5.7	20 U	20	5.9	290 U	290	89
1,2-Dichlorobenzene	68,000	19 U	19	2.4	20 U	20	2.4	19 U	19	2.3	20 U	20	2.4	290 U	290	37
2-Methylphenol	250,000	19 U	19	5.1	20 U	20	5.1	19 U	19	4.9	20 U	20	5.1	290 U	290	77
2,2'-Oxybis(1-Chloropropane)	---	19 U	19	3.6	20 U	20	3.7	19 U	19	3.5	20 U	20	3.7	290 U	290	55
4-Methylphenol	41,000	39 U	39	6.4	39 U	39	6.5	37 U	37	6.2	39 U	39	6.5	580 U	580	97
N-Nitroso-Di-N-Propylamine	---	19 U	19	3.2	20 U	20	3.3	19 U	19	3.1	20 U	20	3.3	290 U	290	49
Hexachloroethane	---	19 U	19	2.8	20 U	20	2.9	19 U	19	2.7	20 U	20	2.9	290 U	290	43
Nitrobenzene	---	19 U	19	3.9	20 U	20	4.0	19 U	19	3.8	20 U	20	4.0	290 U	290	59
Isophorone	---	19 U	19	2.8	20 U	20	2.8	19 U	19	2.7	20 U	20	2.8	290 U	290	42
2-Nitrophenol	---	96 U	96	37	97 U	97	38	93 U	93	36	98 U	98	38	1500 U	1500	570
2,4-Dimethylphenol	95,000	39 U	39	3.3	39 U	39	3.4	37 U	37	3.2	39 UJ	39	3.4	580 UJ	580	51
Benzoic Acid	9,000	390 UJ	390	97	390 UJ	390	98	370 U	370	94	390 U	390	98	5800 U	5800	1500
bis(2-Chloroethoxy) Methane	---	19 U	19	1.9	20 U	20	1.9	19 U	19	1.9	20 U	20	1.9	290 U	290	29
2,4-Dichlorophenol	---	190 U	190	21	200 U	200	21	190 U	190	20	200 U	200	21	2900 U	2900	310
1,2,4-Trichlorobenzene	80	19 U	19	3.4	20 U	20	3.4	19 U	19	3.2	20 U	20	3.4	290 U	290	51
Naphthalene	2,100	19 U	19	2.7	20 U	20	2.7	**100**	19	2.6	20 U	20	2.7	**280** J1	290	40
4-Chloroaniline	---	260 U	260	22	260 U	260	22	250 UJ	250	21	260 U	260	22	3900 U	3900	330
Hexachlorobutadiene	---	96 U	96	4.4	97 U	97	4.4	93 U	93	4.3	98 U	98	4.5	1500 U	1500	67
4-Chloro-3-methylphenol	740,000	96 U	96	15	97 U	97	15	93 U	93	14	98 U	98	15	1500 U	1500	220
2-Methylnaphthalene	320,000	19 U	19	3.0	20 U	20	3.0	**31**	19	2.9	20 U	20	3.0	**230** J1	290	45
Hexachlorocyclopentadiene	---	390 UJ	390	64	390 UJ	390	65	370 UJ	370	62	390 UJ	390	65	5800 UJ	5800	970
2,4,6-Trichlorophenol	---	96 U	96	22	97 U	97	22	93 U	93	21	98 U	98	22	1500 U	1500	330
2,4,5-Trichlorophenol	---	96 U	96	21	97 U	97	21	93 U	93	20	98 U	98	21	1500 U	1500	310
2-Chloronaphthalene	---	19 U	19	2.5	20 U	20	2.6	19 U	19	2.5	20 U	20	2.6	290 U	290	39
2-Nitroaniline	---	96 U	96	18	97 U	97	18	93 U	93	17	98 U	98	18	1500 U	1500	270
Dimethylphthalate	71	19 U	19	2.8	20 U	20	2.8	19 U	19	2.7	20 U	20	2.8	290 U	290	42
Acenaphthylene	---	19 U	19	5.5	20 U	20	5.6	19 U	19	5.3	20 U	20	5.6	290 U	290	83
3-Nitroaniline	---	96 U	96	22	97 U	97	22	93 U	93	21	98 U	98	22	1500 U	1500	330
Acenaphthene	230,000	19 U	19	3.2	20 U	20	3.2	**82**	19	3.1	20 U	20	3.2	290 U	290	48
2,4-Dinitrophenol	---	820 UJ	820	110	830 UJ	830	110	790 UJ	790	100	830 U	830	110	12000 U	12000	1600
4-Nitrophenol	---	96 UJ	96	33	97 UJ	97	34	93 UJ	93	32	98 UJ	98	34	1500 UJ	1500	510
Dibenzofuran	80,000	19 U	19	4.0	20 U	20	4.0	**45**	19	3.8	20 U	20	4.0	290 U	290	60
2,6-Dinitrotoluene	---	96 U	96	30	97 U	97	30	93 U	93	29	98 U	98	30	1500 U	1500	450

TABLE M-1
TEST PIT SOIL ANALYTICAL RESULTS
BOEING ISAACSON-THOMPSON
REMEDIAL INVESTIGATION

	Preliminary Cleanup Level	IT-TP-104-B(12-13) TU13A 10/27/2011			IT-TP-105B-B(11-12) TU13B 10/27/2011			IT-TP-106B(11-12) TU48J 10/28/2011			IT-TP-107-B(11-12) TU01F 10/26/2011			IT-TP-107-SWN(1-2) TU01A 10/26/2011		
		Result	Reporting Limit	Detection Limit	Result	Reporting Limit	Detection Limit	Result	Reporting Limit	Detection Limit	Result	Reporting Limit	Detection Limit	Result	Reporting Limit	Detection Limit
2,4-Dinitrotoluene	---	96 U	96	19	97 U	97	19	93 U	93	18	98 U	98	19	1500 U	1500	280
Diethylphthalate	178,000	48 U	48	35	49 U	49	36	47 U	47	34	49 U	49	36	730 U	730	530
4-Chlorophenyl-phenylether	---	19 U	19	5.1	20 U	20	5.2	19 U	19	4.9	20 U	20	5.2	290 U	290	77
Fluorene	150,000	19 U	19	4.2	20 U	20	4.2	**84**	19	4.1	20 U	20	4.2	290 U	290	64
4-Nitroaniline	---	96 U	96	37	97 U	97	37	93 U	93	35	98 U	98	37	1500 U	1500	550
4,6-Dinitro-2-Methylphenol	---	190 U	190	20	200 U	200	21	190 UJ	190	20	200 U	200	21	2900 U	2900	310
N-Nitrosodiphenylamine	204,000	19 U	19	5.2	20 U	20	5.2	19 U	19	5.0	20 U	20	5.3	290 U	290	79
4-Bromophenyl-phenylether	---	19 U	19	4.9	20 U	20	4.9	19 U	19	4.7	20 U	20	4.9	290 U	290	73
Hexachlorobenzene	---	19 U	19	4.1	20 U	20	4.2	19 U	19	4.0	20 U	20	4.2	290 U	290	63
Pentachlorophenol	---	190 UJ	190	47	200 UJ	200	47	190 UJ	190	45	200 U	200	47	2900 U	2900	710
Phenanthrene	---	**11** J1	19	3.5	20 U	20	3.5	**150**	19	3.4	20 U	20	3.5	**890**	290	53
Carbazole	50,000	19 U	19	2.6	20 U	20	2.6	19 U	19	2.5	20 U	20	2.6	290 U	290	39
Anthracene	1,600,000	19 U	19	4.3	20 U	20	4.4	**10** J1	19	4.2	20 U	20	4.4	**320**	290	66
Di-n-Butylphthalate	26,000	19 U	19	7.9	20 U	20	7.9	19 U	19	7.6	20 U	20	8.0	290 U	290	120
Fluoranthene	230,000	19 U	19	2.8	20 U	20	2.8	**17** J1	19	2.7	20 U	20	2.8	**940**	290	43
Pyrene	240,000	19 U	19	1.9	20 U	20	1.9	**16** J1	19	1.8	20 U	20	1.9	**1900**	290	28
Butylbenzylphthalate	1,700	19 U	19	5.9	20 U	20	6.0	19 U	19	5.7	20 U	20	6.0	290 U	290	90
3,3'-Dichlorobenzidine	---	140 U	140	17	150 U	150	17	140 UJ	140	17	150 UJ	150	17	2200 UJ	2200	260
Benzo(a)anthracene	---	19 U	19	3.2	20 U	20	3.2	19 U	19	3.1	20 U	20	3.2	**640**	290	48
bis(2-Ethylhexyl)phthalate	56,600	24 U	24	14	24 U	24	14	23 U	23	14	24 U	24	14	360 U	360	210
Chrysene	---	19 U	19	3.6	20 U	20	3.7	19 U	19	3.5	20 U	20	3.7	**1200**	290	55
Di-n-Octyl phthalate	---	19 U	19	5.6	20 U	20	5.7	19 U	19	5.5	20 U	20	5.7	290 U	290	85
Benzo(a)pyrene	---	19 U	19	5.3	20 U	20	5.3	19 U	19	5.1	20 U	20	5.3	**1000**	290	80
Indeno(1,2,3-cd)pyrene	---	19 U	19	4.5	20 U	20	4.6	19 U	19	4.4	20 U	20	4.6	**570**	290	68
Dibenz(a,h)anthracene	---	19 U	19	4.2	20 U	20	4.2	19 U	19	4.0	20 U	20	4.2	290 U	290	63
Benzo(g,h,i)perylene	---	19 U	19	4.2	20 U	20	4.3	19 U	19	4.1	20 U	20	4.3	**850**	290	64
1-Methylnaphthalene	16,000	19 U	19	2.6	20 U	20	2.6	**29**	19	2.5	20 U	20	2.6	290 U	290	39
Total Benzofluoranthenes	---	19 U	19	2.7	20 U	20	2.7	**9.3** J1	19	2.6	20 U	20	2.7	**1100**	290	40
cPAH TEQ	15	ND	NA	NA	ND	NA	NA	**0.9** J	NA	NA	ND	NA	NA	**1243**	NA	NA
PAHs (µg/kg)																
Method SW8270D-SIM																
Naphthalene	2,100	**3.6** J1	4.8	2.5	**5.3**	4.6	2.4	**59** J	4.6	2.4	4.8 U	4.8	2.5	**450**	35	19
2-Methylnaphthalene	320,000	**3.8** J1	4.8	1.4	4.6 U	4.6	1.4	**6.6** J	4.6	1.4	4.8 U	4.8	1.5	**380**	35	11
1-Methylnaphthalene	16,000	**3.7** J1	4.8	1.6	4.6 U	4.6	1.6	**7.6**	4.6	1.6	4.8 U	4.8	1.6	**310**	35	12
Total Naphthalenes	---	**11.1** J1	NA	NA	**5.3**	NA	NA	**73.2** J	NA	NA	4.8 U	NA	NA	**1140**	NA	NA
Acenaphthylene	---	4.8 U	4.8	1.2	4.6 U	4.6	1.2	4.6 U	4.6	1.2	4.8 U	4.8	1.2	**57**	35	8.9
Acenaphthene	230,000	**4.1** J1	4.8	1.3	**2.5** J1	4.6	1.2	**28** J	4.6	1.2	4.8 U	4.8	1.3	**740**	35	9.3
Fluorene	150,000	4.8 U	4.8	1.2	4.6 U	4.6	1.2	**22** J	4.6	1.2	4.8 U	4.8	1.2	**530**	35	9.1
Phenanthrene	---	**7.7**	4.8	1.9	**3.8** J1	4.6	1.8	**51** J	4.6	1.8	**6.6**	4.8	1.9	**4400**	120	47
Anthracene	1,600,000	4.8 U	4.8	1.4	4.6 U	4.6	1.4	**3.8** J1	4.6	1.4	4.8 U	4.8	1.4	**1300**	35	10
Fluoranthene	230,000	**5.0**	4.8	1.7	**4.8**	4.6	1.6	**9.1**	4.6	1.6	4.8 U	4.8	1.7	**5400**	120	42
Pyrene	240,000	**6.2**	4.8	2.1	**4.4** J1	4.6	2.1	**7.4**	4.6	2.1	4.8 U	4.8	2.1	**5900**	120	52
Benzo(a)anthracene	---	4.8 U	4.8	1.5	4.6 U	4.6	1.5	**2.8** J, J1	4.6	1.5	4.8 U	4.8	1.5	**3400**	35	11
Chrysene	---	**3.0** J1	4.8	1.8	4.6 U	4.6	1.7	**3.5** J, J1	4.6	1.7	4.8 U	4.8	1.8	**4200**	120	44
Benzo(a)pyrene	---	4.8 U	4.8	1.7	4.6 U	4.6	1.6	**2.6** J, J1	4.6	1.6	4.8 U	4.8	1.7	**5200**	120	41
Indeno(1,2,3-cd)pyrene	---	4.8 U	4.8	3.3	4.6 U	4.6	3.2	4.6 U	4.6	3.2	4.8 U	4.8	3.3	**2900**	35	25
Dibenz(a,h)anthracene	---	4.8 U	4.8	2.3	4.6 U	4.6	2.2	4.6 U	4.6	2.2	4.8 U	4.8	2.3	**810**	35	17
Benzo(g,h,i)perylene	---	4.8 U	4.8	2.9	4.6 U	4.6	2.8	4.6 U	4.6	2.8	4.8 U	4.8	2.9	**3400**	35	22
Dibenzofuran	80,000	**2.6** J1	4.8	1.4	4.6 U	4.6	1.4	**8.4** J	4.6	1.4	4.8 U	4.8	1.5	**320**	35	11
Total Benzofluoranthenes	---	4.8 U	4.8	1.8	4.6 U	4.6	1.7	4.6 U	4.6	1.7	4.8 U	4.8	1.8	**6400**	35	13
cPAH TEQ	15	**0.5** J	NA	NA	ND	NA	NA	**2.9** J	NA	NA	ND	NA	NA	**6593**	NA	NA

TABLE M-1
TEST PIT SOIL ANALYTICAL RESULTS
BOEING ISAACSON-THOMPSON
REMEDIAL INVESTIGATION

	Preliminary Cleanup Level	IT-TP-104-B(12-13) TU13A 10/27/2011			IT-TP-105B-B(11-12) TU13B 10/27/2011			IT-TP-106B(11-12) TU48J 10/28/2011			IT-TP-107-B(11-12) TU01F 10/26/2011			IT-TP-107-SWN(1-2) TU01A 10/26/2011		
		Result	Reporting Limit	Detection Limit	Result	Reporting Limit	Detection Limit	Result	Reporting Limit	Detection Limit	Result	Reporting Limit	Detection Limit	Result	Reporting Limit	Detection Limit
PCBs (µg/kg)																
Method SW8082																
Aroclor 1016	0.72	36 U	36	2.2	34 U	34	2.0	33 U	33	2.0	32 U	32	1.9	32 U	32	1.9
Aroclor 1242	0.72	36 U	36	2.7	34 U	34	2.5	33 U	33	2.4	32 U	32	2.4	32 U	32	2.3
Aroclor 1248	220	36 U	36	2.7	34 U	34	2.5	33 U	33	2.4	32 U	32	2.4	32 U	32	2.3
Aroclor 1254	0.29	36 U	36	2.7	34 U	34	2.5	33 U	33	2.4	32 U	32	2.4	32 U	32	2.3
Aroclor 1260	5.4	36 U	36	2.7	34 U	34	2.5	33 U	33	2.4	32 U	32	2.4	32 U	32	2.3
Aroclor 1221	---	36 U	36	2.7	34 U	34	2.5	33 U	33	2.4	32 U	32	2.4	32 U	32	2.3
Aroclor 1232	---	36 U	36	2.7	34 U	34	2.5	33 U	33	2.4	32 U	32	2.4	32 U	32	2.3
Total PCBs	1.8	ND	NA	NA	ND	NA	NA	ND	NA	NA	ND	NA	NA	ND	NA	NA
TOTAL PETROLEUM HYDROCARBONS (mg/kg)																
NWTPH-Dx																
Diesel-Range Organics	2,000	5.8 U	5.8	1.5	5.8 U	5.8	1.5	**9.4**	6.1	1.6	6.8 U	6.8	1.7	**280**	29	7.5
Oil-Range Organics	2,000	12 U	12	1.8	12 U	12	1.8	12 U	12	1.9	14 U	14	2.1	**800**	58	9.2
NWTPH-G																
Gasoline-Range Organics	100/30	7.6 U	7.6	3.6	8.0 U	8.0	3.8	8.2 U	8.2	3.9	8.3 U	8.3	4.0	**14**	8.0	3.8
TOTAL METALS (mg/kg)																
Methods 200.8/7471A/SW7196A																
Antimony	5	0.2 UJ	0.2	0.016	0.2 U	0.2	0.015	0.2 UJ	0.2	0.015	0.3 U	0.3	0.017	0.2 UJ	0.2	0.015
Arsenic	7	**2.0**	0.2	0.11	**2.3**	0.2	0.10	**4.2**	0.2	0.10	**4.5**	0.3	0.11	**85.3** J	0.2	0.10
Barium	640	**35.6** J	0.6	0.068	**27.6**	0.6	0.065	**43.5**	0.6	0.066	**71.9**	0.6	0.072	**169**	0.6	0.066
Beryllium	160	0.2 U	0.2	0.022	0.2 U	0.2	0.021	0.2 U	0.2	0.021	0.3 U	0.3	0.023	0.2 U	0.2	0.021
Cadmium	1.3	**0.1**	0.1	0.015	0.1 U	0.1	0.014	**0.2**	0.1	0.014	0.1 U	0.1	0.015	**0.3**	0.1	0.014
Chromium	1,480	**11**	2	0.12	**12**	1	0.11	**13.5**	0.6	0.044	**14.8**	0.6	0.049	**13.3**	0.6	0.045
Chromium VI	3.8	0.498 U	0.498	0.030	0.470 U	0.470	0.030	0.494 U	0.494	0.030	0.534 U	0.534	0.030	0.469 UJ	0.469	0.030
Copper	36	**11.9**	0.6	0.044	**9.9**	0.6	0.042	**14.5**	0.6	0.042	**20.9**	0.6	0.046	**205**	0.6	0.042
Lead	250	**2.9**	0.1	0.057	**2.1**	0.1	0.054	**4.1** J	0.1	0.055	**2.8**	0.1	0.061	**81.4** J	0.1	0.055
Mercury	1.5	0.02 U	0.02	0.0012	0.03 U	0.03	0.0014	0.02 UJ	0.02	0.0012	**0.03**	0.03	0.0013	**1.14**	0.03	0.0014
Nickel	210	**13.7**	0.6	0.060	**10.3**	0.6	0.057	**12.5**	0.6	0.057	**11.8**	0.6	0.063	**14.6**	0.6	0.058
Selenium	1.0	0.6 U	0.6	0.12	0.6 U	0.6	0.11	0.6 U	0.6	0.12	0.6 U	0.6	0.13	0.6 U	0.6	0.12
Silver	170	0.2 U	0.2	0.0097	0.2 U	0.2	0.0092	0.2 U	0.2	0.0094	0.3 U	0.3	0.010	0.2 U	0.2	0.0094
Thallium	0.67	0.2 U	0.2	0.0036	0.2 U	0.2	0.0035	0.2 U	0.2	0.0035	0.3 U	0.3	0.0039	0.2 U	0.2	0.0035
Zinc	1,400	**37**	5	0.41	**31**	5	0.39	**38**	5	0.40	**82**	5	0.44	**157**	5	0.40

TABLE M-1
TEST PIT SOIL ANALYTICAL RESULTS
BOEING ISAACSON-THOMPSON
REMEDIAL INVESTIGATION

	Preliminary Cleanup Level	IT-TP-107-SWN(2-3) TU01E 10/26/2011			IT-TP-107-SWS(1-2) TU01C 10/26/2011			IT-TP-107-SWE(1-2) TU01B 10/26/2011			IT-TP-107-SWW(1-2) TU01D 10/26/2011			IT-TP-108-B(11-12) TU01L 10/26/2011		
		Result	Reporting Limit	Detection Limit	Result	Reporting Limit	Detection Limit	Result	Reporting Limit	Detection Limit	Result	Reporting Limit	Detection Limit	Result	Reporting Limit	Detection Limit
VOLATILES (µg/kg)																
Method SW8260C																
Chloromethane	1,600	1.3 U	1.3	0.35	1.1 U	1.1	0.29	1.7 U	1.7	0.45	1.0 U	1.0	0.27	1.4 U	1.4	0.36
Bromomethane	---	1.3 U	1.3	0.25	1.1 U	1.1	0.21	1.7 U	1.7	0.32	1.0 U	1.0	0.19	1.4 U	1.4	0.26
Vinyl Chloride	7.4	1.3 U	1.3	0.31	1.1 U	1.1	0.26	1.7 U	1.7	0.41	1.0 U	1.0	0.24	1.4 U	1.4	0.32
Chloroethane	280,000	1.3 U	1.3	0.61	1.1 U	1.1	0.51	1.7 U	1.7	0.80	1.0 U	1.0	0.47	1.4 U	1.4	0.63
Methylene Chloride	2400	**2.6** J, J1	2.6	0.84	**2.9** J	2.2	0.70	3.5 U	3.5	1.1	**1.5** J, J1	2.0	0.65	**3.0** J	2.7	0.87
Acetone	510,000	**25** J	6.6	0.64	**45** J	5.5	0.53	**230** J	8.6	0.83	**51** J	5.1	0.49	**28** J	6.8	0.66
Carbon Disulfide	75,000	1.3 U	1.3	0.74	1.1 U	1.1	0.62	**1.7**	1.7	0.96	1.0 U	1.0	0.57	1.4 U	1.4	0.77
1,1-Dichloroethene	81	1.3 U	1.3	0.44	1.1 U	1.1	0.37	1.7 U	1.7	0.58	1.0 U	1.0	0.34	1.4 U	1.4	0.46
1,1-Dichloroethane	710	1.3 U	1.3	0.27	1.1 U	1.1	0.23	1.7 U	1.7	0.35	1.0 U	1.0	0.21	1.4 U	1.4	0.28
trans-1,2-Dichloroethene	19,000	1.3 U	1.3	0.35	1.1 U	1.1	0.29	1.7 U	1.7	0.46	1.0 U	1.0	0.27	1.4 U	1.4	0.36
cis-1,2-Dichloroethene	2,600	1.3 U	1.3	0.32	1.1 U	1.1	0.27	1.7 U	1.7	0.41	1.0 U	1.0	0.24	1.4 U	1.4	0.33
Chloroform	200	1.3 U	1.3	0.31	1.1 U	1.1	0.26	1.7 U	1.7	0.40	1.0 U	1.0	0.24	1.4 U	1.4	0.32
1,2-Dichloroethane	70	1.3 U	1.3	0.25	1.1 U	1.1	0.21	1.7 U	1.7	0.33	1.0 U	1.0	0.19	1.4 U	1.4	0.26
2-Butanone	430,000	6.6 U	6.6	0.68	**3.9** J1	5.5	0.57	**17**	8.6	0.88	**2.9** J1	5.1	0.52	6.8 U	6.8	0.70
1,1,1-Trichloroethane	1,900,000	1.3 U	1.3	0.30	1.1 U	1.1	0.25	1.7 U	1.7	0.39	1.0 U	1.0	0.23	1.4 U	1.4	0.31
Carbon Tetrachloride	21	1.3 U	1.3	0.28	1.1 U	1.1	0.24	1.7 U	1.7	0.37	1.0 U	1.0	0.22	1.4 U	1.4	0.29
Vinyl Acetate	---	6.6 U	6.6	0.50	5.5 U	5.5	0.42	8.6 U	8.6	0.66	5.1 U	5.1	0.39	6.8 U	6.8	0.52
Bromodichloromethane	89	1.3 U	1.3	0.34	1.1 U	1.1	0.28	1.7 U	1.7	0.44	1.0 U	1.0	0.26	1.4 U	1.4	0.35
1,2-Dichloropropane	92	1.3 U	1.3	0.21	1.1 U	1.1	0.18	1.7 U	1.7	0.28	1.0 U	1.0	0.17	1.4 U	1.4	0.22
cis-1,3-Dichloropropene	---	1.3 U	1.3	0.30	1.1 U	1.1	0.25	1.7 U	1.7	0.39	1.0 U	1.0	0.23	1.4 U	1.4	0.31
Trichloroethene	51	1.3 U	1.3	0.28	1.1 U	1.1	0.24	1.7 U	1.7	0.37	1.0 U	1.0	0.22	1.4 U	1.4	0.29
Dibromochloromethane	---	1.3 U	1.3	0.35	1.1 U	1.1	0.29	1.7 U	1.7	0.46	1.0 U	1.0	0.27	1.4 U	1.4	0.36
1,1,2-Trichloroethane	73	1.3 U	1.3	0.38	1.1 U	1.1	0.32	1.7 U	1.7	0.49	1.0 U	1.0	0.29	1.4 U	1.4	0.39
Benzene	93	1.3 U	1.3	0.39	**1.3**	1.1	0.33	**0.9** J1	1.7	0.51	1.0 U	1.0	0.30	1.4 U	1.4	0.41
trans-1,3-Dichloropropene	---	1.3 U	1.3	0.28	1.1 U	1.1	0.24	1.7 U	1.7	0.37	1.0 U	1.0	0.22	1.4 U	1.4	0.30
2-Chloroethylvinylether	---	6.6 U	6.6	0.36	5.5 U	5.5	0.31	8.6 U	8.6	0.48	5.1 U	5.1	0.28	6.8 U	6.8	0.38
Bromoform	---	1.3 U	1.3	0.39	1.1 U	1.1	0.33	1.7 U	1.7	0.51	1.0 U	1.0	0.30	1.4 U	1.4	0.41
4-Methyl-2-Pentanone (MIBK)	170,000	6.6 U	6.6	0.55	5.5 U	5.5	0.47	8.6 U	8.6	0.72	5.1 U	5.1	0.43	6.8 U	6.8	0.58
2-Hexanone	32,000	6.6 U	6.6	0.58	5.5 U	5.5	0.49	8.6 U	8.6	0.76	5.1 U	5.1	0.45	6.8 U	6.8	0.60
Tetrachloroethene	260	1.3 U	1.3	0.34	1.1 U	1.1	0.28	1.7 U	1.7	0.44	1.0 U	1.0	0.26	1.4 U	1.4	0.35
1,1,2,2-Tetrachloroethane	13	1.3 U	1.3	0.33	1.1 U	1.1	0.28	1.7 U	1.7	0.44	1.0 U	1.0	0.26	1.4 U	1.4	0.35
Toluene	100,000	1.3 U	1.3	0.20	**0.7** J1	1.1	0.17	**5.3**	1.7	0.26	**1.0** J1	1.0	0.15	1.4 U	1.4	0.21
Chlorobenzene	26,000	1.3 U	1.3	0.29	1.1 U	1.1	0.24	1.7 U	1.7	0.38	1.0 U	1.0	0.22	1.4 U	1.4	0.30
Ethylbenzene	230	1.3 U	1.3	0.27	1.1 U	1.1	0.22	1.7 U	1.7	0.35	1.0 U	1.0	0.21	1.4 U	1.4	0.28
Styrene	16,000,000	1.3 U	1.3	0.18	1.1 U	1.1	0.15	1.7 U	1.7	0.24	1.0 U	1.0	0.14	1.4 U	1.4	0.19
Trichlorofluoromethane	200,000	1.3 U	1.3	0.35	1.1 U	1.1	0.29	1.7 U	1.7	0.46	1.0 U	1.0	0.27	1.4 U	1.4	0.36
1,1,2-Trichloro-1,2,2-trifuoroethane	1,000,000,000	2.6 U	2.6	0.38	2.2 U	2.2	0.32	3.5 U	3.5	0.49	2.0 U	2.0	0.29	2.7 U	2.7	0.39
m,p-Xylene	160,000	1.3 U	1.3	0.52	1.1 U	1.1	0.43	1.7 U	1.7	0.68	1.0 U	1.0	0.40	1.4 U	1.4	0.54
o-Xylene	200,000	1.3 U	1.3	0.30	1.1 U	1.1	0.25	1.7 U	1.7	0.39	1.0 U	1.0	0.23	1.4 U	1.4	0.31
1,2-Dichlorobenzene	68,000	1.3 U	1.3	0.39	1.1 U	1.1	0.32	1.7 U	1.7	0.51	1.0 U	1.0	0.30	1.4 U	1.4	0.40
1,3-Dichlorobenzene	3,840	1.3 U	1.3	0.30	1.1 U	1.1	0.25	1.7 U	1.7	0.39	1.0 U	1.0	0.23	1.4 U	1.4	0.31
1,4-Dichlorobenzene	3,500	1.3 U	1.3	0.31	1.1 U	1.1	0.26	1.7 U	1.7	0.40	1.0 U	1.0	0.24	1.4 U	1.4	0.32
Acrolein	---	66 U	66	5.0	55 U	55	4.2	86 U	86	6.6	51 U	51	3.9	68 U	68	5.2
Methyl Iodide	---	1.3 U	1.3	0.28	1.1 U	1.1	0.24	1.7 U	1.7	0.37	1.0 U	1.0	0.22	1.4 U	1.4	0.29
Bromoethane	---	2.6 U	2.6	0.58	2.2 U	2.2	0.49	3.5 U	3.5	0.76	2.0 U	2.0	0.45	2.7 U	2.7	0.60
Acrylonitrile	---	6.6 U	6.6	1.4	5.5 U	5.5	1.1	8.6 U	8.6	1.8	5.1 U	5.1	1.1	6.8 U	6.8	1.4
1,1-Dichloropropene	---	1.3 U	1.3	0.41	1.1 U	1.1	0.35	1.7 U	1.7	0.54	1.0 U	1.0	0.32	1.4 U	1.4	0.43
Dibromomethane	---	1.3 U	1.3	0.19	1.1 U	1.1	0.16	1.7 U	1.7	0.25	1.0 U	1.0	0.15	1.4 U	1.4	0.20
1,1,1,2-Tetrachloroethane	---	1.3 U	1.3	0.31	1.1 U	1.1	0.26	1.7 U	1.7	0.40	1.0 U	1.0	0.24	1.4 U	1.4	0.32
1,2-Dibromo-3-chloropropane	---	6.6 U	6.6	0.77	5.5 U	5.5	0.65	8.6 U	8.6	1.0	5.1 U	5.1	0.60	6.8 U	6.8	0.80
1,2,3-Trichloropropane	---	2.6 U	2.6	0.68	2.2 U	2.2	0.57	3.5 U	3.5	0.89	2.0 U	2.0	0.53	2.7 U	2.7	0.71
trans-1,4-Dichloro-2-butene	---	6.6 U	6.6	0.58	5.5 U	5.5	0.48	8.6 U	8.6	0.75	5.1 U	5.1	0.45	6.8 U	6.8	0.60
1,3,5-Trimethylbenzene	800,000	1.3 U	1.3	0.34	1.1 U	1.1	0.28	**2.0**	1.7	0.44	1.0 U	1.0	0.26	1.4 U	1.4	0.35
1,2,4-Trimethylbenzene	800,000	1.3 U	1.3	0.30	1.1 U	1.1	0.25	**3.7**	1.7	0.40	1.0 U	1.0	0.23	1.4 U	1.4	0.32
Hexachlorobutadiene	---	6.6 U	6.6	0.54	5.5 U	5.5	0.45	8.6 U	8.6	0.71	5.1 U	5.1	0.42	6.8 U	6.8	0.56

TABLE M-1
TEST PIT SOIL ANALYTICAL RESULTS
BOEING ISAACSON-THOMPSON
REMEDIAL INVESTIGATION

	Preliminary Cleanup Level	IT-TP-107-SWN(2-3) TU01E 10/26/2011			IT-TP-107-SWS(1-2) TU01C 10/26/2011			IT-TP-107-SWE(1-2) TU01B 10/26/2011			IT-TP-107-SWW(1-2) TU01D 10/26/2011			IT-TP-108-B(11-12) TU01L 10/26/2011		
		Result	Reporting Limit	Detection Limit	Result	Reporting Limit	Detection Limit	Result	Reporting Limit	Detection Limit	Result	Reporting Limit	Detection Limit	Result	Reporting Limit	Detection Limit
Ethylene Dibromide	---	1.3 U	1.3	0.23	1.1 U	1.1	0.20	1.7 U	1.7	0.30	1.0 U	1.0	0.18	1.4 U	1.4	0.24
Bromochloromethane	---	1.3 U	1.3	0.43	1.1 U	1.1	0.36	1.7 U	1.7	0.56	1.0 U	1.0	0.33	1.4 U	1.4	0.44
2,2-Dichloropropane	---	1.3 U	1.3	0.39	1.1 U	1.1	0.32	1.7 U	1.7	0.50	1.0 U	1.0	0.30	1.4 U	1.4	0.40
1,3-Dichloropropane	---	1.3 U	1.3	0.28	1.1 U	1.1	0.23	1.7 U	1.7	0.36	1.0 U	1.0	0.21	1.4 U	1.4	0.29
Isopropylbenzene	78,000	1.3 U	1.3	0.31	1.1 U	1.1	0.26	1.7 U	1.7	0.40	1.0 U	1.0	0.24	1.4 U	1.4	0.32
n-Propylbenzene	11,000	1.3 U	1.3	0.36	1.1 U	1.1	0.30	1.7 U	1.7	0.47	1.0 U	1.0	0.28	1.4 U	1.4	0.37
Bromobenzene	---	1.3 U	1.3	0.20	1.1 U	1.1	0.17	1.7 U	1.7	0.26	1.0 U	1.0	0.16	1.4 U	1.4	0.21
2-Chlorotoluene	---	1.3 U	1.3	0.40	1.1 U	1.1	0.33	1.7 U	1.7	0.52	1.0 U	1.0	0.31	1.4 U	1.4	0.41
4-Chlorotoluene	400,000	1.3 U	1.3	0.37	1.1 U	1.1	0.31	1.7 U	1.7	0.48	1.0 U	1.0	0.28	1.4 U	1.4	0.38
tert-Butylbenzene	---	1.3 U	1.3	0.40	1.1 U	1.1	0.34	1.7 U	1.7	0.53	1.0 U	1.0	0.31	1.4 U	1.4	0.42
sec-Butylbenzene	---	1.3 U	1.3	0.32	1.1 U	1.1	0.27	1.7 U	1.7	0.41	1.0 U	1.0	0.24	1.4 U	1.4	0.33
4-Isopropyltoluene	---	1.3 U	1.3	0.31	1.1 U	1.1	0.26	**6.3**	1.7	0.41	1.0 U	1.0	0.24	1.4 U	1.4	0.32
n-Butylbenzene	27,000	1.3 U	1.3	0.35	1.1 U	1.1	0.29	1.7 U	1.7	0.45	1.0 U	1.0	0.27	1.4 U	1.4	0.36
1,2,4-Trichlorobenzene	80	6.6 U	6.6	0.44	5.5 U	5.5	0.37	8.6 U	8.6	0.57	5.1 U	5.1	0.34	6.8 U	6.8	0.45
Naphthalene	2,100	6.6 U	6.6	0.57	5.5 U	5.5	0.48	8.6 U	8.6	0.74	5.1 U	5.1	0.44	6.8 U	6.8	0.59
1,2,3-Trichlorobenzene	---	6.6 U	6.6	0.40	5.5 U	5.5	0.34	8.6 U	8.6	0.53	5.1 U	5.1	0.31	6.8 U	6.8	0.42
SEMIVOLATILES (µg/kg)																
Method SW8270D																
Phenol	1,900,000	20 U	20	8.5	20 UJ	20	8.5	97 UJ	97	42	18 UJ	18	7.9	19 U	19	8.2
Bis-(2-Chloroethyl) Ether	---	20 U	20	3.3	20 U	20	3.3	97 U	97	16	18 U	18	3.0	19 U	19	3.2
2-Chlorophenol	---	20 U	20	2.3	20 UJ	20	2.4	97 UJ	97	12	18 UJ	18	2.2	19 U	19	2.3
1,3-Dichlorobenzene	3,840	20 U	20	2.6	20 U	20	2.6	97 U	97	13	18 U	18	2.4	19 U	19	2.5
1,4-Dichlorobenzene	3,500	20 U	20	2.8	20 U	20	2.8	97 U	97	14	18 U	18	2.6	19 U	19	2.7
Benzyl Alcohol	8,000,000	20 U	20	6.0	20 U	20	6.0	97 U	97	30	18 U	18	5.5	19 U	19	5.8
1,2-Dichlorobenzene	68,000	20 U	20	2.5	20 U	20	2.5	97 U	97	12	18 U	18	2.3	19 U	19	2.4
2-Methylphenol	250,000	20 U	20	5.1	20 UJ	20	5.2	97 UJ	97	26	18 UJ	18	4.8	19 U	19	5.0
2,2'-Oxybis(1-Chloropropane)	---	20 U	20	3.7	20 U	20	3.7	97 U	97	18	18 U	18	3.4	19 U	19	3.6
4-Methylphenol	41,000	39 U	39	6.5	39 UJ	39	6.5	200 UJ	200	32	36 UJ	36	6.0	38 U	38	6.3
N-Nitroso-Di-N-Propylamine	---	20 U	20	3.3	20 U	20	3.3	97 U	97	16	18 U	18	3.1	19 U	19	3.2
Hexachloroethane	---	20 U	20	2.9	20 U	20	2.9	97 U	97	14	18 U	18	2.7	19 U	19	2.8
Nitrobenzene	---	20 U	20	4.0	20 U	20	4.0	97 U	97	20	18 U	18	3.7	19 U	19	3.8
Isophorone	---	20 U	20	2.8	20 U	20	2.8	97 U	97	14	18 U	18	2.6	19 U	19	2.7
2-Nitrophenol	---	98 U	98	38	98 UJ	98	38	490 UJ	490	190	91 UJ	91	35	94 U	94	37
2,4-Dimethylphenol	95,000	39 UJ	39	3.4	39 UJ	39	3.4	200 UJ	200	17	36 UJ	36	3.1	38 UJ	38	3.3
Benzoic Acid	9,000	390 U	390	99	390 UJ	390	99	2000 UJ	2000	490	360 UJ	360	92	380 U	380	95
bis(2-Chloroethoxy) Methane	---	20 U	20	2.0	20 U	20	2.0	97 U	97	9.7	18 U	18	1.8	19 U	19	1.9
2,4-Dichlorophenol	---	200 U	200	21	200 UJ	200	21	970 UJ	970	100	180 UJ	180	20	190 U	190	20
1,2,4-Trichlorobenzene	80	20 U	20	3.4	20 U	20	3.4	97 U	97	17	18 U	18	3.2	19 U	19	3.3
Naphthalene	2,100	20 U	20	2.7	20 U	20	2.7	**190**	97	13	**18**	18	2.5	19 U	19	2.6
4-Chloroaniline	---	260 U	260	22	270 U	270	22	1300 U	1300	110	240 U	240	20	260 U	260	21
Hexachlorobutadiene	---	98 U	98	4.5	98 U	98	4.5	490 U	490	22	91 U	91	4.2	94 U	94	4.3
4-Chloro-3-methylphenol	740,000	98 U	98	15	98 UJ	98	15	490 UJ	490	74	91 UJ	91	14	94 U	94	14
2-Methylnaphthalene	320,000	**12** J1	20	3.0	20 U	20	3.0	**170**	97	15	**14** J1	18	2.8	19 U	19	2.9
Hexachlorocyclopentadiene	---	390 UJ	390	65	390 UJ	390	65	2000 UJ	2000	320	360 UJ	360	60	380 UJ	380	63
2,4,6-Trichlorophenol	---	98 U	98	22	98 UJ	98	22	490 UJ	490	110	91 UJ	91	20	94 U	94	21
2,4,5-Trichlorophenol	---	98 U	98	21	98 UJ	98	21	490 UJ	490	100	91 UJ	91	19	94 U	94	20
2-Chloronaphthalene	---	20 U	20	2.6	20 U	20	2.6	97 U	97	13	18 U	18	2.4	19 U	19	2.5
2-Nitroaniline	---	98 U	98	18	98 U	98	18	490 U	490	90	91 U	91	17	94 U	94	17
Dimethylphthalate	71	20 U	20	2.8	20 U	20	2.9	97 U	97	14	18 U	18	2.6	19 U	19	2.7
Acenaphthylene	---	20 U	20	5.6	**11** J1	20	5.6	97 U	97	28	**24**	18	5.2	19 U	19	5.4
3-Nitroaniline	---	98 U	98	22	98 U	98	22	490 U	490	110	91 U	91	20	94 U	94	21
Acenaphthene	230,000	20 U	20	3.2	20 U	20	3.2	**130**	97	16	18 U	18	3.0	19 U	19	3.1
2,4-Dinitrophenol	---	830 U	830	110	840 UJ	840	110	4100 UJ	4100	540	770 UJ	770	100	800 U	800	100
4-Nitrophenol	---	98 UJ	98	34	98 UJ	98	34	490 UJ	490	170	91 UJ	91	32	94 UJ	94	33
Dibenzofuran	80,000	20 U	20	4.0	20 U	20	4.0	**73** J1	97	20	18 U	18	3.7	19 U	19	3.9
2,6-Dinitrotoluene	---	98 U	98	30	98 U	98	30	490 U	490	150	91 U	91	28	94 U	94	29

TABLE M-1
TEST PIT SOIL ANALYTICAL RESULTS
BOEING ISAACSON-THOMPSON
REMEDIAL INVESTIGATION

	Preliminary Cleanup Level	IT-TP-107-SWN(2-3) TU01E 10/26/2011			IT-TP-107-SWS(1-2) TU01C 10/26/2011			IT-TP-107-SWE(1-2) TU01B 10/26/2011			IT-TP-107-SWW(1-2) TU01D 10/26/2011			IT-TP-108-B(11-12) TU01L 10/26/2011		
		Result	Reporting Limit	Detection Limit	Result	Reporting Limit	Detection Limit	Result	Reporting Limit	Detection Limit	Result	Reporting Limit	Detection Limit	Result	Reporting Limit	Detection Limit
2,4-Dinitrotoluene	---	98 U	98	19	98 U	98	19	490 U	490	95	91 U	91	18	94 U	94	18
Diethylphthalate	178,000	49 U	49	36	49 U	49	36	240 U	240	180	46 U	46	33	47 U	47	35
4-Chlorophenyl-phenylether	---	20 U	20	5.2	20 U	20	5.2	97 U	97	26	18 U	18	4.8	19 U	19	5.0
Fluorene	150,000	20 U	20	4.3	20 U	20	4.3	**160**	97	21	18 U	18	4.0	19 U	19	4.1
4-Nitroaniline	---	98 U	98	37	98 U	98	37	490 U	490	180	91 U	91	34	94 U	94	36
4,6-Dinitro-2-Methylphenol	---	200 U	200	21	200 UJ	200	21	970 UJ	970	100	180 UJ	180	19	190 U	190	20
N-Nitrosodiphenylamine	204,000	20 U	20	5.3	20 U	20	5.3	97 U	97	26	18 U	18	4.9	19 U	19	5.1
4-Bromophenyl-phenylether	---	20 U	20	4.9	20 U	20	5.0	97 U	97	24	18 U	18	4.6	19 U	19	4.7
Hexachlorobenzene	---	20 U	20	4.2	20 U	20	4.2	97 U	97	21	18 U	18	3.9	19 U	19	4.1
Pentachlorophenol	---	200 U	200	48	200 UJ	200	48	970 UJ	970	240	180 UJ	180	44	190 U	190	46
Phenanthrene	---	**12** J1	20	3.6	**68**	20	3.6	**1600**	97	18	**56**	18	3.3	19 U	19	3.4
Carbazole	50,000	20 U	20	2.6	20 U	20	2.6	**68** J1	97	13	18 U	18	2.4	19 U	19	2.5
Anthracene	1,600,000	20 U	20	4.4	**12** J1	20	4.4	**410**	97	22	**12** J1	18	4.1	19 U	19	4.2
Di-n-Butylphthalate	26,000	20 U	20	8.0	**12** J1	20	8.0	97 U	97	40	18 U	18	7.4	19 U	19	7.7
Fluoranthene	230,000	20 U	20	2.9	**130**	20	2.9	**1600**	97	14	**61**	18	2.6	19 U	19	2.7
Pyrene	240,000	**13** J1	20	1.9	**190**	20	1.9	**2200**	97	9.4	**110**	18	1.8	19 U	19	1.8
Butylbenzylphthalate	1,700	20 U	20	6.0	20 U	20	6.0	97 U	97	30	18 U	18	5.6	19 U	19	5.8
3,3'-Dichlorobenzidine	---	150 UJ	150	17	150 UJ	150	18	730 UJ	730	87	140 UJ	140	16	140 UJ	140	17
Benzo(a)anthracene	---	20 U	20	3.2	**85**	20	3.2	**840**	97	16	**60**	18	3.0	19 U	19	3.1
bis(2-Ethylhexyl)phthalate	56,600	**21** J1	24	14	25 U	25	14	120 U	120	71	23 U	23	13	24 U	24	14
Chrysene	---	20 U	20	3.7	**110**	20	3.7	**1100**	97	18	**81**	18	3.4	19 U	19	3.5
Di-n-Octyl phthalate	---	20 U	20	5.7	20 U	20	5.7	97 U	97	28	18 U	18	5.3	19 U	19	5.5
Benzo(a)pyrene	---	20 U	20	5.3	**100**	20	5.4	**1100**	97	27	**100**	18	5.0	19 U	19	5.1
Indeno(1,2,3-cd)pyrene	---	20 U	20	4.6	**63**	20	4.6	**640**	97	23	**66**	18	4.3	19 U	19	4.4
Dibenz(a,h)anthracene	---	20 U	20	4.2	**19** J1	20	4.2	**200**	97	21	**24**	18	3.9	19 U	19	4.1
Benzo(g,h,i)perylene	---	**20**	20	4.3	**89**	20	4.3	**850**	97	21	**97**	18	4.0	19 U	19	4.2
1-Methylnaphthalene	16,000	20 U	20	2.6	20 U	20	2.6	**88** J1	97	13	18 U	18	2.4	19 U	19	2.5
Total Benzofluoranthenes	---	**16** J1	20	2.7	**160**	20	2.7	**1400**	97	13	**140**	18	2.5	19 U	19	2.6
cPAH TEQ	15	**2** J	NA	NA	**134** J	NA	NA	**1419**	NA	NA	**130**	NA	NA	ND	NA	NA
PAHs (µg/kg)																
Method SW8270D-SIM																
Naphthalene	2,100	**6.3**	5.0	2.6	**5.7**	5.0	2.6	**170**	28	15	**10**	4.6	2.4	4.7 U	4.7	2.5
2-Methylnaphthalene	320,000	**9.9**	5.0	1.5	**4.8** J1	5.0	1.5	**170**	28	8.6	**9.7**	4.6	1.4	4.7 U	4.7	1.4
1-Methylnaphthalene	16,000	**8.0**	5.0	1.7	**3.8** J1	5.0	1.7	**110**	28	9.6	**7.1**	4.6	1.6	4.7 U	4.7	1.6
Total Naphthalenes	---	**24.2**	NA	NA	**14.3** J1	NA	NA	**450**	NA	NA	**26.8**	NA	NA	4.7 U	NA	NA
Acenaphthylene	---	5.0 U	5.0	1.3	**3.9** J1	5.0	1.2	**46**	28	7.1	**7.1**	4.6	1.2	4.7 U	4.7	1.2
Acenaphthene	230,000	5.0 U	5.0	1.3	5.0 U	5.0	1.3	**160**	28	7.4	**6.7**	4.6	1.2	4.7 U	4.7	1.2
Fluorene	150,000	5.0 U	5.0	1.3	**2.6** J1	5.0	1.3	**120**	28	7.3	**5.0**	4.6	1.2	4.7 U	4.7	1.2
Phenanthrene	---	**11**	5.0	2.0	**25**	5.0	2.0	**1200**	28	11	**57**	4.6	1.8	4.7 U	4.7	1.8
Anthracene	1,600,000	5.0 U	5.0	1.5	**5.0**	5.0	1.4	**280**	28	8.2	**11**	4.6	1.3	4.7 U	4.7	1.4
Fluoranthene	230,000	**7.9**	5.0	1.8	**39**	5.0	1.8	**1300**	28	10	**71**	4.6	1.6	4.7 U	4.7	1.7
Pyrene	240,000	**9.5**	5.0	2.2	**43**	5.0	2.2	**1600**	28	13	**84**	4.6	2.0	4.7 U	4.7	2.1
Benzo(a)anthracene	---	**5.7**	5.0	1.6	**22**	5.0	1.6	**730**	28	9.0	**39**	4.6	1.5	4.7 U	4.7	1.5
Chrysene	---	**8.0**	5.0	1.9	**28**	5.0	1.9	**1200**	28	11	**48**	4.6	1.7	4.7 U	4.7	1.8
Benzo(a)pyrene	---	**8.7**	5.0	1.7	**28**	5.0	1.7	**970**	28	9.9	**48**	4.6	1.6	4.7 U	4.7	1.6
Indeno(1,2,3-cd)pyrene	---	**5.7**	5.0	3.4	**24**	5.0	3.4	**440**	28	20	**38**	4.6	3.2	4.7 U	4.7	3.2
Dibenz(a,h)anthracene	---	5.0 U	5.0	2.4	**7.0**	5.0	2.4	**200**	28	13	**13**	4.6	2.2	4.7 U	4.7	2.2
Benzo(g,h,i)perylene	---	**6.9**	5.0	3.0	**33**	5.0	3.0	**650**	28	17	**51**	4.6	2.8	4.7 U	4.7	2.8
Dibenzofuran	80,000	**3.1** J1	5.0	1.5	5.0 U	5.0	1.5	**76**	28	8.5	**3.8** J1	4.6	1.4	4.7 U	4.7	1.4
Total Benzofluoranthenes	---	**15**	5.0	1.8	**44**	5.0	1.8	**1200**	28	10	**72**	4.6	1.7	4.7 U	4.7	1.7
cPAH TEQ	15	**11.4**	NA	NA	**14**	NA	NA	**1239**	NA	NA	**65**	NA	NA	ND	NA	NA

TABLE M-1
TEST PIT SOIL ANALYTICAL RESULTS
BOEING ISAACSON-THOMPSON
REMEDIAL INVESTIGATION

	Preliminary Cleanup Level	IT-TP-107-SWN(2-3) TU01E 10/26/2011			IT-TP-107-SWS(1-2) TU01C 10/26/2011			IT-TP-107-SWE(1-2) TU01B 10/26/2011			IT-TP-107-SWW(1-2) TU01D 10/26/2011			IT-TP-108-B(11-12) TU01L 10/26/2011		
		Result	Reporting Limit	Detection Limit	Result	Reporting Limit	Detection Limit	Result	Reporting Limit	Detection Limit	Result	Reporting Limit	Detection Limit	Result	Reporting Limit	Detection Limit
PCBs (µg/kg)																
Method SW8082																
Aroclor 1016	0.72	31 U	31	1.9	31 U	31	1.9	31 U	31	1.9	31 U	31	1.9	33 U	33	2.0
Aroclor 1242	0.72	31 U	31	2.3	31 U	31	2.3	31 U	31	2.3	31 U	31	2.3	33 U	33	2.4
Aroclor 1248	220	31 U	31	2.3	31 U	31	2.3	31 U	31	2.3	31 U	31	2.3	33 U	33	2.4
Aroclor 1254	0.29	31 U	31	2.3	31 U	31	2.3	31 U	31	2.3	31 U	31	2.3	33 U	33	2.4
Aroclor 1260	5.4	31 U	31	2.3	31 U	31	2.3	31 U	31	2.3	31 U	31	2.3	33 U	33	2.4
Aroclor 1221	---	31 U	31	2.3	31 U	31	2.3	31 U	31	2.3	31 U	31	2.3	33 U	33	2.4
Aroclor 1232	---	31 U	31	2.3	31 U	31	2.3	31 U	31	2.3	31 U	31	2.3	33 U	33	2.4
Total PCBs	1.8	ND	NA	NA	ND	NA	NA	ND	NA	NA	ND	NA	NA	ND	NA	NA
TOTAL PETROLEUM HYDROCARBONS (mg/kg)																
NWTPH-Dx																
Diesel-Range Organics	2,000	5.4 U	5.4	1.4	**6.4**	5.5	1.4	**200**	5.8	1.5	**11**	5.5	1.4	6.1 U	6.1	1.6
Oil-Range Organics	2,000	11 U	11	1.7	**32**	11	1.7	**500**	12	1.8	**51**	11	1.7	12 U	12	1.9
NWTPH-G																
Gasoline-Range Organics	100/30	7.9 U	7.9	3.8	7.1 U	7.1	3.4	13 U	13	6.1	7.1 U	7.1	3.4	8.0 U	8.0	3.8
TOTAL METALS (mg/kg)																
Methods 200.8/7471A/SW7196A																
Antimony	5	0.2 U	0.2	0.013	0.2 U	0.2	0.014	0.2 U	0.2	0.015	0.2 U	0.2	0.014	0.2 U	0.2	0.015
Arsenic	7	**7.0**	0.2	0.090	**65.0**	0.2	0.091	**73.8**	0.2	0.098	**215**	0.2	0.093	**1.9**	0.2	0.10
Barium	640	**38.9**	0.5	0.058	**70.3**	0.5	0.058	**153**	0.6	0.063	**57.1**	0.5	0.060	**30.7**	0.6	0.066
Beryllium	160	0.2 U	0.2	0.019	**0.2**	0.2	0.019	0.2 U	0.2	0.020	0.2 U	0.2	0.019	0.2 U	0.2	0.021
Cadmium	1.3	0.1 U	0.1	0.012	**0.2**	0.1	0.013	**0.3**	0.1	0.013	**0.2**	0.1	0.013	0.1 U	0.1	0.014
Chromium	1,480	**12**	1	0.098	**14.5**	0.5	0.040	**14.1**	0.6	0.043	**16.9**	0.5	0.041	**8.0**	0.6	0.045
Chromium VI	3.8	0.434 U	0.434	0.030	0.423 U	0.423	0.030	0.481 U	0.481	0.030	0.439 U	0.439	0.030	0.484 U	0.484	0.030
Copper	36	**17.5**	0.5	0.037	**82.0**	0.5	0.038	**196**	0.6	0.040	**129**	0.5	0.038	**10.9**	0.6	0.042
Lead	250	**7.7**	0.1	0.049	**20.0**	0.1	0.049	**82.3**	0.1	0.053	**26.6**	0.1	0.050	**1.5**	0.1	0.055
Mercury	1.5	**0.02**	0.02	0.0011	**0.08**	0.02	0.0010	**1.35**	0.03	0.0015	**0.24**	0.03	0.0013	0.02 U	0.02	0.0012
Nickel	210	**10.6**	0.5	0.051	**14.3**	0.5	0.051	**15.4**	0.6	0.055	**19.2**	0.5	0.052	**7.3**	0.6	0.058
Selenium	1.0	0.5 U	0.5	0.10	0.5 U	0.5	0.10	0.6 U	0.6	0.11	0.5 U	0.5	0.11	0.6 U	0.6	0.12
Silver	170	0.2 U	0.2	0.0083	0.2 U	0.2	0.0083	0.2 U	0.2	0.0090	0.2 U	0.2	0.0085	0.2 U	0.2	0.0094
Thallium	0.67	0.2 U	0.2	0.0031	0.2 U	0.2	0.0031	0.2 U	0.2	0.0034	0.2 U	0.2	0.0032	0.2 U	0.2	0.0035
Zinc	1,400	**59**	4	0.35	**88**	4	0.35	**193**	4	0.38	**148**	4	0.36	**21**	5	0.40

TABLE M-1
TEST PIT SOIL ANALYTICAL RESULTS
BOEING ISAACSON-THOMPSON
REMEDIAL INVESTIGATION

	Preliminary Cleanup Level	IT-TP-108-SWN(1-2) TU01G 10/26/2011			IT-TP-108-SWN(2-3) TU01K 10/26/2011			IT-TP-108-SWS(1-2) TU01H 10/26/2011			IT-TP-108-SWE(1-2) TU01I 10/26/2011			IT-TP-108-SWW(1-2) TU01J 10/26/2011		
		Result	Reporting Limit	Detection Limit	Result	Reporting Limit	Detection Limit	Result	Reporting Limit	Detection Limit	Result	Reporting Limit	Detection Limit	Result	Reporting Limit	Detection Limit
VOLATILES (µg/kg)																
Method SW8260C																
Chloromethane	1,600	1.4 U	1.4	0.38	1.3 U	1.3	0.35	1.2 U	1.2	0.32	1.5 U	1.5	0.39	**1.0** J1	1.8	0.47
Bromomethane	---	1.4 U	1.4	0.27	1.3 U	1.3	0.25	1.2 U	1.2	0.23	1.5 U	1.5	0.28	1.8 UJ	1.8	0.34
Vinyl Chloride	7.4	1.4 U	1.4	0.34	1.3 U	1.3	0.31	1.2 U	1.2	0.28	1.5 U	1.5	0.35	1.8 U	1.8	0.42
Chloroethane	280,000	1.4 U	1.4	0.66	1.3 U	1.3	0.61	1.2 U	1.2	0.56	1.5 U	1.5	0.69	1.8 U	1.8	0.83
Methylene Chloride	2400	2.9 U	2.9	0.91	**3.5** J	2.6	0.84	**1.9** J, J1	2.4	0.77	3.0 U	3.0	0.94	3.6 U	3.6	1.1
Acetone	510,000	**65** J	7.2	0.69	**17** J	6.6	0.64	**140** J	6.0	0.58	**140** J	7.4	0.72	**82** J	9.0	0.87
Carbon Disulfide	75,000	1.4 U	1.4	0.80	1.3 U	1.3	0.74	**1.0** J1	1.2	0.68	1.5 U	1.5	0.83	**1.0** J1	1.8	1.0
1,1-Dichloroethene	81	1.4 U	1.4	0.48	1.3 U	1.3	0.44	1.2 U	1.2	0.41	1.5 U	1.5	0.50	1.8 U	1.8	0.60
1,1-Dichloroethane	710	1.4 U	1.4	0.29	1.3 U	1.3	0.27	1.2 U	1.2	0.25	1.5 U	1.5	0.30	1.8 U	1.8	0.37
trans-1,2-Dichloroethene	19,000	1.4 U	1.4	0.38	1.3 U	1.3	0.35	1.2 U	1.2	0.32	1.5 U	1.5	0.39	1.8 U	1.8	0.48
cis-1,2-Dichloroethene	2,600	1.4 U	1.4	0.34	1.3 U	1.3	0.32	1.2 U	1.2	0.29	1.5 U	1.5	0.36	1.8 U	1.8	0.43
Chloroform	200	1.4 U	1.4	0.34	1.3 U	1.3	0.31	1.2 U	1.2	0.28	1.5 U	1.5	0.35	1.8 U	1.8	0.42
1,2-Dichloroethane	70	1.4 U	1.4	0.27	1.3 U	1.3	0.25	1.2 U	1.2	0.23	1.5 U	1.5	0.28	1.8 U	1.8	0.34
2-Butanone	430,000	**6.4** J1	7.2	0.74	6.6 U	6.6	0.68	**21**	6.0	0.62	**17**	7.4	0.76	**15**	9.0	0.92
1,1,1-Trichloroethane	1,900,000	1.4 U	1.4	0.32	1.3 U	1.3	0.30	1.2 U	1.2	0.27	1.5 U	1.5	0.34	1.8 U	1.8	0.41
Carbon Tetrachloride	21	1.4 U	1.4	0.31	1.3 U	1.3	0.28	1.2 U	1.2	0.26	1.5 U	1.5	0.32	1.8 U	1.8	0.38
Vinyl Acetate	---	7.2 U	7.2	0.55	6.6 U	6.6	0.50	6.0 U	6.0	0.46	7.4 U	7.4	0.57	9.0 U	9.0	0.69
Bromodichloromethane	89	1.4 U	1.4	0.36	1.3 U	1.3	0.34	1.2 U	1.2	0.31	1.5 U	1.5	0.38	1.8 U	1.8	0.46
1,2-Dichloropropane	92	1.4 U	1.4	0.23	1.3 U	1.3	0.21	1.2 U	1.2	0.20	1.5 U	1.5	0.24	1.8 U	1.8	0.29
cis-1,3-Dichloropropene	---	1.4 U	1.4	0.32	1.3 U	1.3	0.30	1.2 U	1.2	0.27	1.5 U	1.5	0.34	1.8 U	1.8	0.41
Trichloroethene	51	1.4 U	1.4	0.30	1.3 U	1.3	0.28	1.2 U	1.2	0.26	1.5 U	1.5	0.31	1.8 U	1.8	0.38
Dibromochloromethane	---	1.4 U	1.4	0.38	1.3 U	1.3	0.35	1.2 U	1.2	0.32	1.5 U	1.5	0.39	1.8 U	1.8	0.48
1,1,2-Trichloroethane	73	1.4 U	1.4	0.41	1.3 U	1.3	0.38	1.2 U	1.2	0.35	1.5 U	1.5	0.42	1.8 U	1.8	0.51
Benzene	93	1.4 U	1.4	0.43	1.3 U	1.3	0.39	**1.3**	1.2	0.36	**4.4**	1.5	0.44	**2.0**	1.8	0.53
trans-1,3-Dichloropropene	---	1.4 U	1.4	0.31	1.3 U	1.3	0.29	1.2 U	1.2	0.26	1.5 U	1.5	0.32	1.8 U	1.8	0.39
2-Chloroethylvinylether	---	7.2 U	7.2	0.40	6.6 U	6.6	0.37	6.0 U	6.0	0.33	7.4 U	7.4	0.41	9.0 U	9.0	0.50
Bromoform	---	1.4 U	1.4	0.43	1.3 U	1.3	0.39	1.2 U	1.2	0.36	1.5 U	1.5	0.44	1.8 U	1.8	0.53
4-Methyl-2-Pentanone (MIBK)	170,000	7.2 U	7.2	0.60	6.6 U	6.6	0.56	6.0 U	6.0	0.51	7.4 U	7.4	0.62	9.0 U	9.0	0.76
2-Hexanone	32,000	7.2 U	7.2	0.63	6.6 U	6.6	0.58	6.0 U	6.0	0.53	7.4 U	7.4	0.65	9.0 U	9.0	0.79
Tetrachloroethene	260	1.4 U	1.4	0.37	1.3 U	1.3	0.34	1.2 U	1.2	0.31	1.5 U	1.5	0.38	1.8 U	1.8	0.46
1,1,2,2-Tetrachloroethane	13	1.4 U	1.4	0.36	1.3 U	1.3	0.33	1.2 U	1.2	0.31	1.5 U	1.5	0.38	1.8 U	1.8	0.46
Toluene	100,000	1.4 U	1.4	0.22	1.3 U	1.3	0.20	**0.8** J1	1.2	0.18	**2.0**	1.5	0.22	**2.0**	1.8	0.27
Chlorobenzene	26,000	1.4 U	1.4	0.31	1.3 U	1.3	0.29	1.2 U	1.2	0.27	1.5 U	1.5	0.32	1.8 U	1.8	0.39
Ethylbenzene	230	1.4 U	1.4	0.29	1.3 U	1.3	0.27	1.2 U	1.2	0.24	1.5 U	1.5	0.30	1.8 U	1.8	0.36
Styrene	16,000,000	1.4 U	1.4	0.20	1.3 U	1.3	0.18	1.2 U	1.2	0.17	1.5 U	1.5	0.20	1.8 U	1.8	0.25
Trichlorofluoromethane	200,000	1.4 U	1.4	0.38	1.3 U	1.3	0.35	1.2 U	1.2	0.32	1.5 U	1.5	0.39	1.8 U	1.8	0.48
1,1,2-Trichloro-1,2,2-trifuoroethane	1,000,000,000	2.9 U	2.9	0.41	2.6 U	2.6	0.38	2.4 U	2.4	0.35	3.0 U	3.0	0.43	3.6 U	3.6	0.52
m,p-Xylene	160,000	1.4 U	1.4	0.56	1.3 U	1.3	0.52	1.2 U	1.2	0.47	**1.0** J1	1.5	0.58	**1.8** J1	1.8	0.71
o-Xylene	200,000	1.4 U	1.4	0.32	1.3 U	1.3	0.30	1.2 U	1.2	0.27	**0.8** J1	1.5	0.33	**1.6** J1	1.8	0.40
1,2-Dichlorobenzene	68,000	1.4 U	1.4	0.42	1.3 U	1.3	0.39	1.2 U	1.2	0.35	1.5 U	1.5	0.43	1.8 U	1.8	0.53
1,3-Dichlorobenzene	3,840	1.4 U	1.4	0.33	1.3 U	1.3	0.30	1.2 U	1.2	0.27	1.5 U	1.5	0.34	1.8 U	1.8	0.41
1,4-Dichlorobenzene	3,500	1.4 U	1.4	0.33	1.3 U	1.3	0.31	1.2 U	1.2	0.28	1.5 U	1.5	0.34	1.8 U	1.8	0.42
Acrolein	---	72 U	72	5.5	66 U	66	5.0	60 U	60	4.6	74 U	74	5.7	90 U	90	6.9
Methyl Iodide	---	1.4 U	1.4	0.31	1.3 U	1.3	0.28	1.2 U	1.2	0.26	1.5 U	1.5	0.32	1.8 U	1.8	0.39
Bromoethane	---	2.9 U	2.9	0.63	2.6 U	2.6	0.58	2.4 U	2.4	0.53	3.0 U	3.0	0.65	3.6 U	3.6	0.79
Acrylonitrile	---	7.2 U	7.2	1.5	6.6 U	6.6	1.4	6.0 U	6.0	1.2	7.4 U	7.4	1.5	9.0 U	9.0	1.9
1,1-Dichloropropene	---	1.4 U	1.4	0.45	1.3 U	1.3	0.41	1.2 U	1.2	0.38	1.5 U	1.5	0.46	1.8 U	1.8	0.56
Dibromomethane	---	1.4 U	1.4	0.21	1.3 U	1.3	0.19	1.2 U	1.2	0.18	1.5 U	1.5	0.22	1.8 U	1.8	0.26
1,1,1,2-Tetrachloroethane	---	1.4 U	1.4	0.33	1.3 U	1.3	0.31	1.2 U	1.2	0.28	1.5 U	1.5	0.35	1.8 U	1.8	0.42
1,2-Dibromo-3-chloropropane	---	7.2 U	7.2	0.84	6.6 U	6.6	0.78	6.0 U	6.0	0.71	7.4 U	7.4	0.87	9.0 U	9.0	1.1
1,2,3-Trichloropropane	---	2.9 U	2.9	0.74	2.6 U	2.6	0.68	2.4 U	2.4	0.63	3.0 U	3.0	0.77	3.6 U	3.6	0.93
trans-1,4-Dichloro-2-butene	---	7.2 U	7.2	0.63	6.6 U	6.6	0.58	6.0 U	6.0	0.53	7.4 U	7.4	0.65	9.0 U	9.0	0.79
1,3,5-Trimethylbenzene	800,000	1.4 U	1.4	0.36	1.3 U	1.3	0.34	1.2 U	1.2	0.31	1.5 U	1.5	0.38	**1.8**	1.8	0.46
1,2,4-Trimethylbenzene	800,000	1.4 U	1.4	0.33	1.3 U	1.3	0.30	1.2 U	1.2	0.28	**1.2** J1	1.5	0.34	**4.0**	1.8	0.41
Hexachlorobutadiene	---	7.2 U	7.2	0.59	6.6 U	6.6	0.54	6.0 U	6.0	0.50	7.4 U	7.4	0.61	9.0 U	9.0	0.74

TABLE M-1
TEST PIT SOIL ANALYTICAL RESULTS
BOEING ISAACSON-THOMPSON
REMEDIAL INVESTIGATION

	Preliminary Cleanup Level	IT-TP-108-SWN(1-2) TU01G 10/26/2011			IT-TP-108-SWN(2-3) TU01K 10/26/2011			IT-TP-108-SWS(1-2) TU01H 10/26/2011			IT-TP-108-SWE(1-2) TU01I 10/26/2011			IT-TP-108-SWW(1-2) TU01J 10/26/2011		
		Result	Reporting Limit	Detection Limit	Result	Reporting Limit	Detection Limit	Result	Reporting Limit	Detection Limit	Result	Reporting Limit	Detection Limit	Result	Reporting Limit	Detection Limit
Ethylene Dibromide	---	1.4 U	1.4	0.25	1.3 U	1.3	0.23	1.2 U	1.2	0.21	1.5 U	1.5	0.26	1.8 U	1.8	0.32
Bromochloromethane	---	1.4 U	1.4	0.46	1.3 U	1.3	0.43	1.2 U	1.2	0.39	1.5 U	1.5	0.48	1.8 U	1.8	0.58
2,2-Dichloropropane	---	1.4 U	1.4	0.42	1.3 U	1.3	0.39	1.2 U	1.2	0.35	1.5 U	1.5	0.43	1.8 U	1.8	0.53
1,3-Dichloropropane	---	1.4 U	1.4	0.30	1.3 U	1.3	0.28	1.2 U	1.2	0.25	1.5 U	1.5	0.31	1.8 U	1.8	0.38
Isopropylbenzene	78,000	1.4 U	1.4	0.33	1.3 U	1.3	0.31	1.2 U	1.2	0.28	1.5 U	1.5	0.35	1.8 U	1.8	0.42
n-Propylbenzene	11,000	1.4 U	1.4	0.39	1.3 U	1.3	0.36	1.2 U	1.2	0.33	1.5 U	1.5	0.40	1.8 U	1.8	0.49
Bromobenzene	---	1.4 U	1.4	0.22	1.3 U	1.3	0.20	1.2 U	1.2	0.19	1.5 U	1.5	0.23	1.8 U	1.8	0.28
2-Chlorotoluene	---	1.4 U	1.4	0.43	1.3 U	1.3	0.40	1.2 U	1.2	0.36	1.5 U	1.5	0.45	1.8 U	1.8	0.54
4-Chlorotoluene	400,000	1.4 U	1.4	0.40	1.3 U	1.3	0.37	1.2 U	1.2	0.34	1.5 U	1.5	0.41	1.8 U	1.8	0.50
tert-Butylbenzene	---	1.4 U	1.4	0.44	1.3 U	1.3	0.40	1.2 U	1.2	0.37	1.5 U	1.5	0.45	1.8 U	1.8	0.55
sec-Butylbenzene	---	1.4 U	1.4	0.34	1.3 U	1.3	0.32	1.2 U	1.2	0.29	1.5 U	1.5	0.36	1.8 U	1.8	0.43
4-Isopropyltoluene	---	1.4 U	1.4	0.34	1.3 U	1.3	0.31	**0.9** J1	1.2	0.29	**0.8** J1	1.5	0.35	**1.6** J1	1.8	0.42
n-Butylbenzene	27,000	1.4 U	1.4	0.38	1.3 U	1.3	0.35	1.2 U	1.2	0.32	1.5 U	1.5	0.39	1.8 U	1.8	0.47
1,2,4-Trichlorobenzene	80	7.2 U	7.2	0.48	6.6 U	6.6	0.44	6.0 U	6.0	0.40	7.4 U	7.4	0.49	9.0 U	9.0	0.60
Naphthalene	2,100	7.2 U	7.2	0.62	6.6 U	6.6	0.57	6.0 U	6.0	0.52	**2.0** J1	7.4	0.64	**6.3** J, J1	9.0	0.77
1,2,3-Trichlorobenzene	---	7.2 U	7.2	0.44	6.6 U	6.6	0.40	6.0 U	6.0	0.37	7.4 U	7.4	0.45	9.0 U	9.0	0.55
SEMIVOLATILES (µg/kg)																
Method SW8270D																
Phenol	1,900,000	120 U	120	54	19 U	19	8.2	98 U	98	42	94 U	94	41	280 U	280	120
Bis-(2-Chloroethyl) Ether	---	120 U	120	21	19 U	19	3.2	98 U	98	16	94 U	94	16	280 U	280	47
2-Chlorophenol	---	120 U	120	15	19 U	19	2.3	98 U	98	12	94 U	94	11	280 U	280	33
1,3-Dichlorobenzene	3,840	120 U	120	16	19 U	19	2.5	98 U	98	13	94 U	94	12	280 U	280	37
1,4-Dichlorobenzene	3,500	120 U	120	18	19 U	19	2.7	98 U	98	14	94 U	94	13	280 U	280	40
Benzyl Alcohol	8,000,000	120 U	120	38	19 U	19	5.8	98 U	98	30	94 U	94	29	280 U	280	85
1,2-Dichlorobenzene	68,000	120 U	120	16	19 U	19	2.4	98 U	98	12	94 U	94	12	280 U	280	35
2-Methylphenol	250,000	120 U	120	33	19 U	19	5.0	98 U	98	26	94 U	94	25	280 U	280	73
2,2'-Oxybis(1-Chloropropane)	---	120 U	120	23	19 U	19	3.6	98 U	98	18	94 U	94	18	280 U	280	52
4-Methylphenol	41,000	250 U	250	41	38 U	38	6.3	**78** J1	200	32	190 U	190	31	560 U	560	92
N-Nitroso-Di-N-Propylamine	---	120 U	120	21	19 U	19	3.2	98 U	98	16	94 U	94	16	280 U	280	47
Hexachloroethane	---	120 U	120	18	19 U	19	2.8	98 U	98	14	94 U	94	14	280 U	280	41
Nitrobenzene	---	120 U	120	25	19 U	19	3.9	98 U	98	20	94 U	94	19	280 U	280	56
Isophorone	---	120 U	120	18	19 U	19	2.7	98 U	98	14	94 U	94	13	280 U	280	40
2-Nitrophenol	---	620 U	620	240	95 U	95	37	490 U	490	190	470 U	470	180	1400 U	1400	540
2,4-Dimethylphenol	95,000	250 UJ	250	22	38 UJ	38	3.3	200 UJ	200	17	190 UJ	190	16	560 UJ	560	48
Benzoic Acid	9,000	2500 U	2500	630	380 U	380	96	2000 U	2000	490	1900 U	1900	470	5600 U	5600	1400
bis(2-Chloroethoxy) Methane	---	120 U	120	12	19 U	19	1.9	98 U	98	9.8	94 U	94	9.4	280 U	280	28
2,4-Dichlorophenol	---	1200 U	1200	130	190 U	190	20	980 U	980	110	940 U	940	100	2800 U	2800	300
1,2,4-Trichlorobenzene	80	120 U	120	22	19 U	19	3.3	98 U	98	17	94 U	94	16	280 U	280	48
Naphthalene	2,100	**220**	120	17	19 U	19	2.6	**1700**	98	13	**190**	94	13	280 U	280	38
4-Chloroaniline	---	1700 U	1700	140	260 U	260	21	1300 U	1300	110	1300 U	1300	100	3800 U	3800	310
Hexachlorobutadiene	---	620 U	620	29	95 U	95	4.4	490 U	490	22	470 U	470	21	1400 U	1400	64
4-Chloro-3-methylphenol	740,000	620 U	620	94	95 U	95	14	490 U	490	74	470 U	470	71	1400 U	1400	210
2-Methylnaphthalene	320,000	**290**	120	19	19 U	19	2.9	**880**	98	15	**250**	94	14	**200** J1	280	43
Hexachlorocyclopentadiene	---	2500 UJ	2500	410	380 UJ	380	63	2000 UJ	2000	320	1900 UJ	1900	310	5600 UJ	5600	920
2,4,6-Trichlorophenol	---	620 U	620	140	95 U	95	21	490 U	490	110	470 U	470	100	1400 U	1400	310
2,4,5-Trichlorophenol	---	620 U	620	130	95 U	95	20	490 U	490	100	470 U	470	100	1400 U	1400	300
2-Chloronaphthalene	---	120 U	120	16	19 U	19	2.5	98 U	98	13	94 U	94	12	280 U	280	37
2-Nitroaniline	---	620 U	620	110	95 U	95	18	490 U	490	90	470 U	470	86	1400 U	1400	260
Dimethylphthalate	71	120 U	120	18	19 U	19	2.8	98 U	98	14	94 U	94	14	280 U	280	40
Acenaphthylene	---	**69** J1	120	36	19 U	19	5.4	**59** J1	98	28	94 U	94	27	280 U	280	79
3-Nitroaniline	---	620 U	620	140	95 U	95	21	490 U	490	110	470 U	470	110	1400 U	1400	310
Acenaphthene	230,000	120 U	120	20	19 U	19	3.1	**1600**	98	16	94 U	94	15	280 U	280	46
2,4-Dinitrophenol	---	5300 U	5300	690	810 U	810	110	4200 U	4200	540	4000 U	4000	520	12000 U	12000	1500
4-Nitrophenol	---	620 UJ	620	220	95 UJ	95	33	490 UJ	490	170	470 UJ	470	160	1400 UJ	1400	480
Dibenzofuran	80,000	120 U	120	26	19 U	19	3.9	**690**	98	20	94 U	94	19	280 U	280	57
2,6-Dinitrotoluene	---	620 U	620	190	95 U	95	29	490 U	490	150	470 U	470	140	1400 U	1400	430

TABLE M-1
TEST PIT SOIL ANALYTICAL RESULTS
BOEING ISAACSON-THOMPSON
REMEDIAL INVESTIGATION

	Preliminary Cleanup Level	IT-TP-108-SWN(1-2) TU01G 10/26/2011			IT-TP-108-SWN(2-3) TU01K 10/26/2011			IT-TP-108-SWS(1-2) TU01H 10/26/2011			IT-TP-108-SWE(1-2) TU01I 10/26/2011			IT-TP-108-SWW(1-2) TU01J 10/26/2011		
		Result	Reporting Limit	Detection Limit	Result	Reporting Limit	Detection Limit	Result	Reporting Limit	Detection Limit	Result	Reporting Limit	Detection Limit	Result	Reporting Limit	Detection Limit
2,4-Dinitrotoluene	---	620 U	620	120	95 U	95	19	490 U	490	95	470 U	470	91	1400 U	1400	270
Diethylphthalate	178,000	310 U	310	230	48 U	48	35	240 U	240	180	230 U	230	170	700 U	700	510
4-Chlorophenyl-phenylether	---	120 U	120	33	19 U	19	5.0	98 U	98	26	94 U	94	25	280 U	280	74
Fluorene	150,000	**75** J1	120	27	19 U	19	4.1	**1500**	98	21	**52** J1	94	20	280 U	280	60
4-Nitroaniline	---	620 U	620	240	95 U	95	36	490 U	490	190	470 U	470	180	1400 U	1400	530
4,6-Dinitro-2-Methylphenol	---	1200 U	1200	130	190 U	190	20	980 U	980	100	940 U	940	99	2800 U	2800	290
N-Nitrosodiphenylamine	204,000	120 U	120	34	19 U	19	5.1	98 U	98	26	94 U	94	25	280 U	280	75
4-Bromophenyl-phenylether	---	120 U	120	31	19 U	19	4.8	98 U	98	25	94 U	94	24	280 U	280	70
Hexachlorobenzene	---	120 U	120	27	19 U	19	4.1	98 U	98	21	94 U	94	20	280 U	280	60
Pentachlorophenol	---	1200 U	1200	300	190 U	190	46	980 U	980	240	940 U	940	230	2800 U	2800	670
Phenanthrene	---	**480**	120	23	19 U	19	3.5	**7500**	98	18	**330**	94	17	**1200**	280	51
Carbazole	50,000	120 U	120	17	19 U	19	2.6	**2600**	98	13	94 U	94	13	280 U	280	37
Anthracene	1,600,000	**130**	120	28	19 U	19	4.3	**1800**	98	22	**70** J1	94	21	**220** J1	280	63
Di-n-Butylphthalate	26,000	120 U	120	51	19 U	19	7.8	98 U	98	40	**66** J1	94	38	280 U	280	110
Fluoranthene	230,000	**370**	120	18	19 U	19	2.8	**6600**	98	14	**210**	94	14	**400**	280	40
Pyrene	240,000	**1100**	120	12	19 U	19	1.8	**6000**	98	9.5	**560**	94	9.1	**2100**	280	27
Butylbenzylphthalate	1,700	120 U	120	38	19 U	19	5.8	98 U	98	30	94 U	94	29	280 U	280	85
3,3'-Dichlorobenzidine	---	940 UJ	940	110	140 UJ	140	17	730 UJ	730	87	700 UJ	700	83	2100 UJ	2100	250
Benzo(a)anthracene	---	**220**	120	21	19 U	19	3.1	**2800**	98	16	**220**	94	15	**850**	280	46
bis(2-Ethylhexyl)phthalate	56,600	160 U	160	91	24 U	24	14	120 U	120	71	120 U	120	68	350 U	350	200
Chrysene	---	**390**	120	23	19 U	19	3.6	**3400**	98	18	**540**	94	18	**2000**	280	52
Di-n-Octyl phthalate	---	120 U	120	36	19 U	19	5.6	98 U	98	29	94 U	94	27	280 U	280	81
Benzo(a)pyrene	---	**260**	120	34	19 U	19	5.2	**1800**	98	27	**170**	94	26	**560**	280	76
Indeno(1,2,3-cd)pyrene	---	**120**	120	29	19 U	19	4.5	**630**	98	23	**94**	94	22	**140** J1	280	65
Dibenz(a,h)anthracene	---	120 U	120	27	19 U	19	4.1	**300**	98	21	94 U	94	20	280 U	280	60
Benzo(g,h,i)perylene	---	**240**	120	27	19 U	19	4.2	**810**	98	22	**190**	94	21	**320**	280	61
1-Methylnaphthalene	16,000	**110** J1	120	17	19 U	19	2.6	**440**	98	13	**120**	94	13	280 U	280	37
Total Benzofluoranthenes	---	**320**	120	17	19 U	19	2.6	**3400**	98	13	**220**	94	13	**530**	280	38
cPAH TEQ	15	**330**	NA	NA	ND	NA	NA	**2547**	NA	NA	**229**	NA	NA	**732** J	NA	NA
PAHs (µg/kg)																
Method SW8270D-SIM																
Naphthalene	2,100	**190**	26	14	4.7 U	4.7	2.5	**1400**	18	9.6	**140**	8.4	4.4	**95**	44	23
2-Methylnaphthalene	320,000	**330**	26	7.8	4.7 U	4.7	1.4	**760**	18	5.6	**220**	8.4	2.6	**230**	44	13
1-Methylnaphthalene	16,000	**150**	26	8.8	4.7 U	4.7	1.6	**410**	18	6.3	**120**	8.4	2.9	**170**	44	15
Total Naphthalenes	---	**670**	NA	NA	4.7 U	NA	NA	**2570**	NA	NA	**480**	NA	NA	**495**	NA	NA
Acenaphthylene	---	26 U	26	6.5	4.7 U	4.7	1.2	**45**	18	4.6	**31**	8.4	2.1	**82**	44	11
Acenaphthene	230,000	**210**	26	6.8	4.7 U	4.7	1.2	**1600**	18	4.8	**66**	8.4	2.2	44 U	44	12
Fluorene	150,000	**180**	26	6.6	4.7 U	4.7	1.2	**1800**	18	4.7	**50**	8.4	2.2	**150**	44	11
Phenanthrene	---	**450**	26	10	4.7 U	4.7	1.9	**11000**	180	73	**400**	8.4	3.3	**1600**	44	17
Anthracene	1,600,000	**140**	26	7.5	**2.6** J1	4.7	1.4	**2500**	180	53	**93**	8.4	2.5	**360**	44	13
Fluoranthene	230,000	**450**	26	9.1	4.7 U	4.7	1.7	**9600**	180	65	**360**	8.4	3.0	**750**	44	16
Pyrene	240,000	**1200**	26	11	4.7 U	4.7	2.1	**7400**	180	81	**590**	8.4	3.7	**2800**	44	19
Benzo(a)anthracene	---	**200**	26	8.2	4.7 U	4.7	1.5	**3100**	180	59	**240**	8.4	2.7	**920**	44	14
Chrysene	---	**470**	26	9.7	4.7 U	4.7	1.8	**2800**	180	69	**520**	8.4	3.2	**2700**	44	16
Benzo(a)pyrene	---	**250**	26	9.0	4.7 U	4.7	1.7	**1400**	18	6.4	**240**	8.4	2.9	**700**	44	15
Indeno(1,2,3-cd)pyrene	---	**160**	26	18	4.7 U	4.7	3.3	**500**	18	13	**99**	8.4	5.8	**190**	44	30
Dibenz(a,h)anthracene	---	**69**	26	12	4.7 U	4.7	2.3	**250**	18	8.7	**39**	8.4	4.0	**110**	44	21
Benzo(g,h,i)perylene	---	**240**	26	16	4.7 U	4.7	2.9	**680**	18	11	**180**	8.4	5.1	**480**	44	27
Dibenzofuran	80,000	26 U	26	7.8	4.7 U	4.7	1.4	**810**	18	5.5	**33**	8.4	2.5	**37** J1	44	13
Total Benzofluoranthenes	---	**330**	26	9.5	4.7 U	4.7	1.8	**2700**	18	6.8	**290**	8.4	3.1	**650**	44	16
cPAH TEQ	15	**331**	NA	NA	ND	NA	NA	**2083**	NA	NA	**312**	NA	NA	**914**	NA	NA

TABLE M-1
TEST PIT SOIL ANALYTICAL RESULTS
BOEING ISAACSON-THOMPSON
REMEDIAL INVESTIGATION

	Preliminary Cleanup Level	IT-TP-108-SWN(1-2) TU01G 10/26/2011			IT-TP-108-SWN(2-3) TU01K 10/26/2011			IT-TP-108-SWS(1-2) TU01H 10/26/2011			IT-TP-108-SWE(1-2) TU01I 10/26/2011			IT-TP-108-SWW(1-2) TU01J 10/26/2011		
		Result	Reporting Limit	Detection Limit	Result	Reporting Limit	Detection Limit	Result	Reporting Limit	Detection Limit	Result	Reporting Limit	Detection Limit	Result	Reporting Limit	Detection Limit
PCBs (µg/kg)																
Method SW8082																
Aroclor 1016	0.72	33 U	33	2.0	32 U	32	2.0	31 U	31	1.9	32 U	32	2.0	32 U	32	2.0
Aroclor 1242	0.72	33 U	33	2.4	32 U	32	2.4	31 U	31	2.3	32 U	32	2.4	32 U	32	2.4
Aroclor 1248	220	33 U	33	2.4	32 U	32	2.4	31 U	31	2.3	32 U	32	2.4	32 U	32	2.4
Aroclor 1254	0.29	33 U	33	2.4	32 U	32	2.4	31 U	31	2.3	32 U	32	2.4	32 U	32	2.4
Aroclor 1260	5.4	33 U	33	2.4	32 U	32	2.4	31 U	31	2.3	32 U	32	2.4	32 U	32	2.4
Aroclor 1221	---	33 U	33	2.4	32 U	32	2.4	31 U	31	2.3	32 U	32	2.4	32 U	32	2.4
Aroclor 1232	---	33 U	33	2.4	32 U	32	2.4	31 U	31	2.3	32 U	32	2.4	32 U	32	2.4
Total PCBs	1.8	ND	NA	NA	ND	NA	NA	ND	NA	NA	ND	NA	NA	ND	NA	NA
TOTAL PETROLEUM HYDROCARBONS (mg/kg)																
NWTPH-Dx																
Diesel-Range Organics	2,000	**2500**	140	36	5.2 U	5.2	1.3	**1100**	58	15	**500**	60	15	**1400**	60	15
Oil-Range Organics	2,000	**2000**	280	44	10 U	10	1.6	**1500**	120	18	**1400**	120	19	**3100**	120	19
NWTPH-G																
Gasoline-Range Organics	100/30	8.0 U	8.0	3.8	7.7 U	7.7	3.7	7.0 U	7.0	3.4	**36**	8.2	3.9	**24**	8.4	4.0
TOTAL METALS (mg/kg)																
Methods 200.8/7471A/SW7196A																
Antimony	5	0.2 U	0.2	0.014	0.2 U	0.2	0.013	0.2 U	0.2	0.015	0.2 U	0.2	0.015	0.2 U	0.2	0.015
Arsenic	7	**35.4**	0.2	0.097	**1.5**	0.2	0.087	**75.0**	0.2	0.10	**34.4**	0.2	0.10	**86.3**	0.2	0.10
Barium	640	**165**	0.6	0.062	**22.7**	0.5	0.056	**79.6**	0.6	0.067	**77.7**	0.6	0.064	**71.4**	0.6	0.066
Beryllium	160	**0.3**	0.2	0.020	0.2 U	0.2	0.018	0.2 U	0.2	0.021	0.2 U	0.2	0.021	**0.3**	0.2	0.021
Cadmium	1.3	**0.3**	0.1	0.013	0.1 U	0.1	0.012	**0.3**	0.1	0.014	**0.3**	0.1	0.014	**0.2**	0.1	0.014
Chromium	1,480	**20**	1	0.11	**6.7**	0.5	0.038	**14.1**	0.6	0.045	**11.2**	0.6	0.044	**17.1**	0.6	0.045
Chromium VI	3.8	0.444 U	0.444	0.030	0.417 U	0.417	0.030	0.471 U	0.471	0.030	**0.558**	0.465	0.030	0.478 U	0.478	0.030
Copper	36	**87.7**	0.6	0.040	**8.8**	0.5	0.036	**131**	0.6	0.043	**42.5**	0.6	0.041	**107**	0.6	0.042
Lead	250	**91.3**	0.1	0.052	**1.2**	0.1	0.047	**52.8**	0.1	0.056	**43.6**	0.1	0.054	**52.1**	0.1	0.055
Mercury	1.5	**0.32**	0.03	0.0014	0.02 U	0.02	0.0010	**0.51**	0.02	0.0011	**0.51**	0.03	0.0014	**0.21**	0.02	0.0013
Nickel	210	**22.3**	0.6	0.055	**6.3**	0.5	0.049	**18.9**	0.6	0.058	**12.1**	0.6	0.056	**22.1**	0.6	0.058
Selenium	1.0	0.6 U	0.6	0.11	0.5 U	0.5	0.099	0.6 U	0.6	0.12	0.6 U	0.6	0.11	0.6 U	0.6	0.12
Silver	170	0.2 U	0.2	0.0089	0.2 U	0.2	0.0080	0.2 U	0.2	0.0095	0.2 U	0.2	0.0092	0.2 U	0.2	0.0094
Thallium	0.67	0.2 U	0.2	0.0033	0.2 U	0.2	0.0030	0.2 U	0.2	0.0036	0.2 U	0.2	0.0034	0.2 U	0.2	0.0035
Zinc	1,400	**139**	4	0.38	**18**	4	0.34	**118**	5	0.40	**92**	5	0.39	**145**	5	0.40

TABLE M-1
TEST PIT SOIL ANALYTICAL RESULTS
BOEING ISAACSON-THOMPSON
REMEDIAL INVESTIGATION

	Preliminary Cleanup Level	IT-TP-109-SWS(9-10) TT67A 10/25/2011		
		Result	Reporting Limit	Detection Limit
VOLATILES (µg/kg)				
Method SW8260C				
Chloromethane	1,600	1.3 U	1.3	0.33
Bromomethane	---	1.3 U	1.3	0.24
Vinyl Chloride	7.4	1.3 U	1.3	0.30
Chloroethane	280,000	1.3 U	1.3	0.59
Methylene Chloride	2400	**3.1**	2.5	0.81
Acetone	510,000	**11**	6.4	0.61
Carbon Disulfide	75,000	1.3 U	1.3	0.71
1,1-Dichloroethene	81	1.3 U	1.3	0.43
1,1-Dichloroethane	710	1.3 U	1.3	0.26
trans-1,2-Dichloroethene	19,000	1.3 U	1.3	0.34
cis-1,2-Dichloroethene	2,600	1.3 U	1.3	0.31
Chloroform	200	1.3 U	1.3	0.30
1,2-Dichloroethane	70	1.3 U	1.3	0.24
2-Butanone	430,000	6.4 U	6.4	0.65
1,1,1-Trichloroethane	1,900,000	1.3 U	1.3	0.29
Carbon Tetrachloride	21	1.3 U	1.3	0.27
Vinyl Acetate	---	6.4 U	6.4	0.48
Bromodichloromethane	89	1.3 U	1.3	0.32
1,2-Dichloropropane	92	1.3 U	1.3	0.21
cis-1,3-Dichloropropene	---	1.3 U	1.3	0.29
Trichloroethene	51	1.3 U	1.3	0.27
Dibromochloromethane	---	1.3 U	1.3	0.34
1,1,2-Trichloroethane	73	1.3 U	1.3	0.36
Benzene	93	1.3 U	1.3	0.38
trans-1,3-Dichloropropene	---	1.3 U	1.3	0.27
2-Chloroethylvinylether	---	6.4 U	6.4	0.35
Bromoform	---	1.3 U	1.3	0.38
4-Methyl-2-Pentanone (MIBK)	170,000	6.4 U	6.4	0.53
2-Hexanone	32,000	6.4 U	6.4	0.56
Tetrachloroethene	260	1.3 U	1.3	0.33
1,1,2,2-Tetrachloroethane	13	1.3 U	1.3	0.32
Toluene	100,000	1.3 U	1.3	0.19
Chlorobenzene	26,000	1.3 U	1.3	0.28
Ethylbenzene	230	1.3 U	1.3	0.26
Styrene	16,000,000	1.3 U	1.3	0.18
Trichlorofluoromethane	200,000	1.3 U	1.3	0.34
1,1,2-Trichloro-1,2,2-trifuoroethane	1,000,000,000	2.5 U	2.5	0.37
m,p-Xylene	160,000	1.3 U	1.3	0.50
o-Xylene	200,000	1.3 U	1.3	0.28
1,2-Dichlorobenzene	68,000	1.3 U	1.3	0.37
1,3-Dichlorobenzene	3,840	1.3 U	1.3	0.29
1,4-Dichlorobenzene	3,500	1.3 U	1.3	0.30
Acrolein	---	64 U	64	4.8
Methyl Iodide	---	1.3 U	1.3	0.27
Bromoethane	---	2.5 U	2.5	0.56
Acrylonitrile	---	6.4 U	6.4	1.3
1,1-Dichloropropene	---	1.3 U	1.3	0.40
Dibromomethane	---	1.3 U	1.3	0.19
1,1,1,2-Tetrachloroethane	---	1.3 U	1.3	0.30
1,2-Dibromo-3-chloropropane	---	6.4 U	6.4	0.75
1,2,3-Trichloropropane	---	2.5 U	2.5	0.66
trans-1,4-Dichloro-2-butene	---	6.4 U	6.4	0.56
1,3,5-Trimethylbenzene	800,000	1.3 U	1.3	0.32
1,2,4-Trimethylbenzene	800,000	1.3 U	1.3	0.29
Hexachlorobutadiene	---	6.4 U	6.4	0.52

TABLE M-1
TEST PIT SOIL ANALYTICAL RESULTS
BOEING ISAACSON-THOMPSON
REMEDIAL INVESTIGATION

	Preliminary Cleanup Level	IT-TP-109-SWS(9-10) TT67A 10/25/2011		
		Result	Reporting Limit	Detection Limit
Ethylene Dibromide	---	1.3 U	1.3	0.22
Bromochloromethane	---	1.3 U	1.3	0.41
2,2-Dichloropropane	---	1.3 U	1.3	0.37
1,3-Dichloropropane	---	1.3 U	1.3	0.27
Isopropylbenzene	78,000	1.3 U	1.3	0.30
n-Propylbenzene	11,000	1.3 U	1.3	0.35
Bromobenzene	---	1.3 U	1.3	0.19
2-Chlorotoluene	---	1.3 U	1.3	0.38
4-Chlorotoluene	400,000	1.3 U	1.3	0.35
tert-Butylbenzene	---	1.3 U	1.3	0.39
sec-Butylbenzene	---	1.3 U	1.3	0.31
4-Isopropyltoluene	---	1.3 U	1.3	0.30
n-Butylbenzene	27,000	1.3 U	1.3	0.33
1,2,4-Trichlorobenzene	80	6.4 U	6.4	0.42
Naphthalene	2,100	6.4 U	6.4	0.55
1,2,3-Trichlorobenzene	---	6.4 U	6.4	0.39
SEMIVOLATILES (µg/kg)				
Method SW8270D				
Phenol	1,900,000	19 U	19	8.2
Bis-(2-Chloroethyl) Ether	---	19 U	19	3.2
2-Chlorophenol	---	19 U	19	2.3
1,3-Dichlorobenzene	3,840	19 U	19	2.5
1,4-Dichlorobenzene	3,500	19 U	19	2.7
Benzyl Alcohol	8,000,000	19 U	19	5.7
1,2-Dichlorobenzene	68,000	19 U	19	2.4
2-Methylphenol	250,000	19 U	19	4.9
2,2'-Oxybis(1-Chloropropane)	---	19 U	19	3.5
4-Methylphenol	41,000	38 U	38	6.2
N-Nitroso-Di-N-Propylamine	---	19 U	19	3.2
Hexachloroethane	---	19 U	19	2.8
Nitrobenzene	---	19 U	19	3.8
Isophorone	---	19 U	19	2.7
2-Nitrophenol	---	94 U	94	36
2,4-Dimethylphenol	95,000	38 U	38	3.3
Benzoic Acid	9,000	380 UJ	380	95
bis(2-Chloroethoxy) Methane	---	19 U	19	1.9
2,4-Dichlorophenol	---	190 U	190	20
1,2,4-Trichlorobenzene	80	19 U	19	3.3
Naphthalene	2,100	19 U	19	2.6
4-Chloroaniline	---	250 U	250	21
Hexachlorobutadiene	---	94 U	94	4.3
4-Chloro-3-methylphenol	740,000	94 U	94	14
2-Methylnaphthalene	320,000	19 U	19	2.9
Hexachlorocyclopentadiene	---	380 UJ	380	63
2,4,6-Trichlorophenol	---	94 U	94	21
2,4,5-Trichlorophenol	---	94 U	94	20
2-Chloronaphthalene	---	19 U	19	2.5
2-Nitroaniline	---	94 U	94	17
Dimethylphthalate	71	19 U	19	2.7
Acenaphthylene	---	19 U	19	5.4
3-Nitroaniline	---	94 U	94	21
Acenaphthene	230,000	19 U	19	3.1
2,4-Dinitrophenol	---	800 UJ	800	100
4-Nitrophenol	---	94 UJ	94	33
Dibenzofuran	80,000	19 U	19	3.9
2,6-Dinitrotoluene	---	94 U	94	29

TABLE M-1
TEST PIT SOIL ANALYTICAL RESULTS
BOEING ISAACSON-THOMPSON
REMEDIAL INVESTIGATION

	Preliminary Cleanup Level	IT-TP-109-SWS(9-10) TT67A 10/25/2011			
		Result		Reporting Limit	Detection Limit
2,4-Dinitrotoluene	---	94	U	94	18
Diethylphthalate	178,000	47	U	47	34
4-Chlorophenyl-phenylether	---	19	U	19	5.0
Fluorene	150,000	19	U	19	4.1
4-Nitroaniline	---	94	U	94	36
4,6-Dinitro-2-Methylphenol	---	190	U	190	20
N-Nitrosodiphenylamine	204,000	19	U	19	5.1
4-Bromophenyl-phenylether	---	19	U	19	4.7
Hexachlorobenzene	---	19	U	19	4.0
Pentachlorophenol	---	190	UJ	190	46
Phenanthrene	---	19	U	19	3.4
Carbazole	50,000	19	U	19	2.5
Anthracene	1,600,000	19	U	19	4.2
Di-n-Butylphthalate	26,000	19	U	19	7.7
Fluoranthene	230,000	19	U	19	2.7
Pyrene	240,000	19	U	19	1.8
Butylbenzylphthalate	1,700	19	U	19	5.8
3,3'-Dichlorobenzidine	---	140	U	140	17
Benzo(a)anthracene	---	19	U	19	3.1
bis(2-Ethylhexyl)phthalate	56,600	24	U	24	14
Chrysene	---	19	U	19	3.5
Di-n-Octyl phthalate	---	19	U	19	5.5
Benzo(a)pyrene	---	19	U	19	5.1
Indeno(1,2,3-cd)pyrene	---	19	U	19	4.4
Dibenz(a,h)anthracene	---	19	U	19	4.1
Benzo(g,h,i)perylene	---	19	U	19	4.1
1-Methylnaphthalene	16,000	19	U	19	2.5
Total Benzofluoranthenes	---	19	U	19	2.6
cPAH TEQ	15	ND		NA	NA
PAHs (µg/kg)					
Method SW8270D-SIM					
Naphthalene	2,100	4.6	U	4.6	2.4
2-Methylnaphthalene	320,000	4.6	U	4.6	1.4
1-Methylnaphthalene	16,000	4.6	U	4.6	1.6
Total Naphthalenes	---	4.6	U	NA	NA
Acenaphthylene	---	4.6	U	4.6	1.2
Acenaphthene	230,000	4.6	U	4.6	1.2
Fluorene	150,000	4.6	U	4.6	1.2
Phenanthrene	---	4.6	U	4.6	1.8
Anthracene	1,600,000	4.6	U	4.6	1.4
Fluoranthene	230,000	4.6	U	4.6	1.6
Pyrene	240,000	4.6	U	4.6	2.1
Benzo(a)anthracene	---	4.6	U	4.6	1.5
Chrysene	---	4.6	U	4.6	1.7
Benzo(a)pyrene	---	4.6	U	4.6	1.6
Indeno(1,2,3-cd)pyrene	---	4.6	U	4.6	3.2
Dibenz(a,h)anthracene	---	4.6	U	4.6	2.2
Benzo(g,h,i)perylene	---	4.6	U	4.6	2.8
Dibenzofuran	80,000	4.6	U	4.6	1.4
Total Benzofluoranthenes	---	4.6	U	4.6	1.7
cPAH TEQ	15	ND		NA	NA

TABLE M-1
TEST PIT SOIL ANALYTICAL RESULTS
BOEING ISAACSON-THOMPSON
REMEDIAL INVESTIGATION

	Preliminary Cleanup Level	IT-TP-109-SWS(9-10) TT67A 10/25/2011		
		Result	Reporting Limit	Detection Limit
PCBs (µg/kg)				
Method SW8082				
Aroclor 1016	0.72	26 U	26	1.6
Aroclor 1242	0.72	26 U	26	1.9
Aroclor 1248	220	26 U	26	1.9
Aroclor 1254	0.29	26 U	26	1.9
Aroclor 1260	5.4	26 U	26	1.9
Aroclor 1221	---	26 U	26	1.9
Aroclor 1232	---	26 U	26	1.9
Total PCBs	1.8	ND	NA	NA
TOTAL PETROLEUM HYDROCARBONS (mg/kg)				
NWTPH-Dx				
Diesel-Range Organics	2,000	5.2 U	5.2	1.3
Oil-Range Organics	2,000	10 U	10	1.6
NWTPH-G				
Gasoline-Range Organics	100/30	**17**	6.8	3.2
TOTAL METALS (mg/kg)				
Methods 200.8/7471A/SW7196A				
Antimony	5	0.2 UJ	0.2	0.013
Arsenic	7	**2.3**	0.2	0.088
Barium	640	**21.3** J	0.5	0.057
Beryllium	160	0.2 U	0.2	0.018
Cadmium	1.3	0.1 U	0.1	0.012
Chromium	1,480	**9.3**	0.5	0.038
Chromium VI	3.8	0.414 U	0.414	0.030
Copper	36	**10.5**	0.5	0.036
Lead	250	**1.4**	0.1	0.048
Mercury	1.5	0.02 U	0.02	0.0013
Nickel	210	**8.8**	0.5	0.050
Selenium	1.0	0.5 U	0.5	0.1
Silver	170	0.2 U	0.2	0.0081
Thallium	0.67	0.2 U	0.2	0.0030
Zinc	1,400	**25**	4	0.34

µg/kg = micrograms per kilogram
mg/kg = milligrams per kilogram
TEQ = Toxic Equivalent Concentration
SIM = Select Ion Monitoring
cPAH = Carcinogenic Polycyclic Aromatic Hydrocarbons
PCB = Polychlorinated Biphenyls
NWTPH-Dx = Total Petroleum Hydrocarbon-Diesel Range
NWTPH-G = Total Petroleum Hydrocarbon-Gasoline Range

ND = Not Detected.
NA = Not Applicable.
Bold = Detected compound.
Box = Exceeds Preliminary Cleanup Level

U = Indicates the compound was not detected at or above the reporting limit.
UJ = The analyte was not detected in the sample at a concentration at or above the reporting limit; the sample reporting limit is an estimate.
J = Indicates the analyte was positively identified; the associated numerical value is the approximate concentration of the analyte in the sample.
J1 = Laboratory flag indicating the analyte was positively identified; the associated concentration is approximate and less than the reporting limit, but equal to or greater than the detection limit.

TABLE M-2
DIRECT-PUSH SOIL BORINGS SOIL ANALYTICAL RESULTS
BOEING ISAACSON-THOMPSON
REMEDIAL INVESTIGATION

	Preliminary Cleanup Level	IT-SB-1 (2-3) ST77D 04/25/2011			IT-SB-1 (5-6) ST77E 04/25/2011			IT-SB-1 (8-9) ST77F 04/25/2011			IT-SB-2(2-3.5) TU65H 10/31/2011			IT-SB-2(5-6.5) TU65I 10/31/2011		
		Result	Reporting Limit	Detection Limit	Result	Reporting Limit	Detection Limit	Result	Reporting Limit	Detection Limit	Result	Reporting Limit	Detection Limit	Result	Reporting Limit	Detection Limit
VOLATILES (µg/kg)																
Method SW8260C																
Chloromethane	1,600	1.0 UJ	1.0	0.26	1.2 UJ	1.2	0.30	1.9 UJ	1.9	0.49	1.1 U	1.1	0.28	1.0 U	1.0	0.26
Bromomethane	---	1.0 UJ	1.0	0.18	1.2 UJ	1.2	0.22	1.9 UJ	1.9	0.35	1.1 U	1.1	0.20	1.0 U	1.0	0.18
Vinyl Chloride	7.4	1.0 UJ	1.0	0.23	1.2 UJ	1.2	0.27	1.9 UJ	1.9	0.44	1.1 U	1.1	0.25	1.0 U	1.0	0.23
Chloroethane	280,000	1.0 UJ	1.0	0.45	1.2 UJ	1.2	0.53	1.9 UJ	1.9	0.86	1.1 U	1.1	0.49	1.0 U	1.0	0.46
Methylene Chloride	2400	**10** J	2.0	0.62	**12** J	2.3	0.73	**11** J	3.7	1.2	**2.6** J	2.1	0.68	**2.9** J	2.0	0.63
Acetone	510,000	**20** J	4.9	0.47	**39** J	5.8	0.56	**100** J	9.3	0.90	29 U	5.3	0.51	**60**	4.9	0.48
Carbon Disulfide	75,000	1.0 UJ	1.0	0.55	1.2 UJ	1.2	0.64	**7.1** J	1.9	1.0	1.1 U	1.1	0.60	**23**	1.0	0.55
1,1-Dichloroethene	81	1.0 UJ	1.0	0.33	1.2 UJ	1.2	0.39	1.9 UJ	1.9	0.62	1.1 U	1.1	0.36	1.0 U	1.0	0.33
1,1-Dichloroethane	710	1.0 UJ	1.0	0.20	1.2 UJ	1.2	0.23	1.9 UJ	1.9	0.38	1.1 U	1.1	0.22	1.0 U	1.0	0.20
trans-1,2-Dichloroethene	19,000	1.0 UJ	1.0	0.26	1.2 UJ	1.2	0.31	1.9 UJ	1.9	0.49	1.1 U	1.1	0.28	1.0 U	1.0	0.26
cis-1,2-Dichloroethene	2,600	1.0 UJ	1.0	0.24	1.2 UJ	1.2	0.28	1.9 UJ	1.9	0.45	1.1 U	1.1	0.26	1.0 U	1.0	0.24
Chloroform	200	1.0 UJ	1.0	0.23	1.2 UJ	1.2	0.27	1.9 UJ	1.9	0.43	1.1 U	1.1	0.25	1.0 U	1.0	0.23
1,2-Dichloroethane	70	1.0 UJ	1.0	0.19	1.2 UJ	1.2	0.22	1.9 UJ	1.9	0.36	1.1 U	1.1	0.20	1.0 U	1.0	0.19
2-Butanone	430,000	4.9 UJ	4.9	0.50	5.8 UJ	5.8	0.59	**14** J	9.3	0.95	5.3 U	5.3	0.55	**9.7**	4.9	0.51
1,1,1-Trichloroethane	1,900,000	1.0 UJ	1.0	0.22	1.2 UJ	1.2	0.26	1.9 UJ	1.9	0.42	1.1 U	1.1	0.24	1.0 U	1.0	0.22
Carbon Tetrachloride	21	1.0 UJ	1.0	0.21	1.2 UJ	1.2	0.25	1.9 UJ	1.9	0.40	1.1 U	1.1	0.23	1.0 U	1.0	0.21
Vinyl Acetate	---	4.9 UJ	4.9	0.37	5.8 UJ	5.8	0.44	9.3 UJ	9.3	0.71	5.3 U	5.3	0.41	4.9 U	4.9	0.38
Bromodichloromethane	89	1.0 UJ	1.0	0.25	1.2 UJ	1.2	0.29	1.9 UJ	1.9	0.47	1.1 U	1.1	0.27	1.0 U	1.0	0.25
1,2-Dichloropropane	92	1.0 UJ	1.0	0.16	1.2 UJ	1.2	0.19	1.9 UJ	1.9	0.30	1.1 U	1.1	0.17	1.0 U	1.0	0.16
cis-1,3-Dichloropropene	---	1.0 UJ	1.0	0.22	1.2 UJ	1.2	0.26	1.9 UJ	1.9	0.42	1.1 U	1.1	0.24	1.0 U	1.0	0.22
Trichloroethene	51	1.0 UJ	1.0	0.21	1.2 UJ	1.2	0.24	1.9 UJ	1.9	0.39	1.1 U	1.1	0.23	1.0 U	1.0	0.21
Dibromochloromethane	---	1.0 UJ	1.0	0.26	1.2 UJ	1.2	0.31	1.9 UJ	1.9	0.49	1.1 U	1.1	0.28	1.0 U	1.0	0.26
1,1,2-Trichloroethane	73	1.0 UJ	1.0	0.28	1.2 UJ	1.2	0.33	1.9 UJ	1.9	0.53	1.1 U	1.1	0.31	1.0 U	1.0	0.28
Benzene	93	1.0 UJ	1.0	0.29	1.2 UJ	1.2	0.34	1.9 UJ	1.9	0.55	1.1 U	1.1	0.32	**0.7** J1	1.0	0.29
trans-1,3-Dichloropropene	---	1.0 UJ	1.0	0.21	1.2 UJ	1.2	0.25	1.9 UJ	1.9	0.40	1.1 U	1.1	0.23	1.0 U	1.0	0.21
2-Chloroethylvinylether	---	4.9 UJ	4.9	0.27	5.8 UJ	5.8	0.32	9.3 UJ	9.3	0.51	5.3 U	5.3	0.29	4.9 U	4.9	0.27
Bromoform	---	1.0 UJ	1.0	0.29	1.2 UJ	1.2	0.34	1.9 UJ	1.9	0.55	1.1 U	1.1	0.32	1.0 U	1.0	0.29
4-Methyl-2-Pentanone (MIBK)	170,000	4.9 UJ	4.9	0.41	5.8 UJ	5.8	0.48	9.3 UJ	9.3	0.78	5.3 U	5.3	0.45	4.9 U	4.9	0.41
2-Hexanone	32,000	4.9 UJ	4.9	0.43	5.8 UJ	5.8	0.51	9.3 UJ	9.3	0.82	5.3 U	5.3	0.47	4.9 U	4.9	0.43
Tetrachloroethene	260	1.0 UJ	1.0	0.25	1.2 UJ	1.2	0.30	1.9 UJ	1.9	0.48	1.1 U	1.1	0.27	1.0 U	1.0	0.25
1,1,2,2-Tetrachloroethane	13	1.0 UJ	1.0	0.25	1.2 UJ	1.2	0.29	1.9 UJ	1.9	0.47	1.1 U	1.1	0.27	1.0 U	1.0	0.25
Toluene	100,000	1.0 UJ	1.0	0.15	1.2 UJ	1.2	0.17	1.9 UJ	1.9	0.28	1.1 U	1.1	0.16	**11**	1.0	0.15
Chlorobenzene	26,000	1.0 UJ	1.0	0.21	1.2 UJ	1.2	0.25	1.9 UJ	1.9	0.41	1.1 U	1.1	0.23	1.0 U	1.0	0.22
Ethylbenzene	230	1.0 UJ	1.0	0.20	1.2 UJ	1.2	0.23	1.9 UJ	1.9	0.38	1.1 U	1.1	0.22	0.5 J1	1.0	0.20
Styrene	16,000,000	1.0 UJ	1.0	0.14	1.2 UJ	1.2	0.16	1.9 UJ	1.9	0.26	1.1 U	1.1	0.15	1.0 U	1.0	0.14
Trichlorofluoromethane	200,000	1.0 UJ	1.0	0.26	1.2 UJ	1.2	0.31	1.9 UJ	1.9	0.49	1.1 U	1.1	0.28	1.0 U	1.0	0.26
1,1,2-Trichloro-1,2,2-trifuoroethane	1,000,000,000	2.0 UJ	2.0	0.28	2.3 UJ	2.3	0.33	3.7 UJ	3.7	0.53	2.1 U	2.1	0.31	2.0 U	2.0	0.28
m,p-Xylene	160,000	1.0 UJ	1.0	0.38	1.2 UJ	1.2	0.45	1.9 UJ	1.9	0.73	1.1 U	1.1	0.42	**2.1**	1.0	0.39
o-Xylene	200,000	1.0 UJ	1.0	0.22	1.2 UJ	1.2	0.26	1.9 UJ	1.9	0.42	1.1 U	1.1	0.24	**1.0** J1	1.0	0.22
1,2-Dichlorobenzene	68,000	1.0 UJ	1.0	0.29	1.2 UJ	1.2	0.34	1.9 UJ	1.9	0.54	1.1 U	1.1	0.31	1.0 U	1.0	0.29
1,3-Dichlorobenzene	3,840	1.0 UJ	1.0	0.22	1.2 UJ	1.2	0.26	1.9 UJ	1.9	0.42	1.1 U	1.1	0.24	1.0 U	1.0	0.22
1,4-Dichlorobenzene	3,500	1.0 UJ	1.0	0.23	1.2 UJ	1.2	0.27	1.9 UJ	1.9	0.43	1.1 U	1.1	0.25	1.0 U	1.0	0.23
Acrolein	---	49 UJ	49	3.7	58 UJ	58	4.4	93 UJ	93	7.1	53 U	53	4.1	49 U	49	3.8
Methyl Iodide	---	1.0 UJ	1.0	0.21	1.2 UJ	1.2	0.25	1.9 UJ	1.9	0.40	1.1 U	1.1	0.23	1.0 U	1.0	0.21
Bromoethane	---	2.0 UJ	2.0	0.43	2.3 UJ	2.3	0.51	3.7 UJ	3.7	0.82	2.1 U	2.1	0.47	2.0 U	2.0	0.43
Acrylonitrile	---	4.9 UJ	4.9	1.0	5.8 UJ	5.8	1.2	9.3 UJ	9.3	1.9	5.3 U	5.3	1.1	4.9 U	4.9	1.0
1,1-Dichloropropene	---	1.0 UJ	1.0	0.31	1.2 UJ	1.2	0.36	1.9 UJ	1.9	0.58	1.1 U	1.1	0.33	1.0 U	1.0	0.31
Dibromomethane	---	1.0 UJ	1.0	0.14	1.2 UJ	1.2	0.17	1.9 UJ	1.9	0.27	1.1 U	1.1	0.16	1.0 U	1.0	0.14
1,1,1,2-Tetrachloroethane	---	1.0 UJ	1.0	0.23	1.2 UJ	1.2	0.27	1.9 UJ	1.9	0.43	1.1 U	1.1	0.25	1.0 U	1.0	0.23
1,2-Dibromo-3-chloropropane	---	4.9 UJ	4.9	0.57	5.8 UJ	5.8	0.68	9.3 UJ	9.3	1.1	5.3 U	5.3	0.63	4.9 U	4.9	0.58
1,2,3-Trichloropropane	---	2.0 UJ	2.0	0.51	2.3 UJ	2.3	0.60	3.7 UJ	3.7	0.96	2.1 U	2.1	0.55	2.0 U	2.0	0.51
trans-1,4-Dichloro-2-butene	---	4.9 UJ	4.9	0.43	5.8 UJ	5.8	0.50	9.3 UJ	9.3	0.81	5.3 U	5.3	0.47	4.9 U	4.9	0.43
1,3,5-Trimethylbenzene	800,000	1.0 UJ	1.0	0.25	1.2 UJ	1.2	0.29	1.9 UJ	1.9	0.47	1.1 U	1.1	0.27	1.0 U	1.0	0.25
1,2,4-Trimethylbenzene	800,000	1.0 UJ	1.0	0.23	1.2 UJ	1.2	0.26	1.9 UJ	1.9	0.43	1.1 U	1.1	0.25	1.0 U	1.0	0.23
Hexachlorobutadiene	---	4.9 UJ	4.9	0.40	5.8 UJ	5.8	0.47	9.3 UJ	9.3	0.76	5.3 U	5.3	0.44	4.9 U	4.9	0.40
Ethylene Dibromide	---	1.0 UJ	1.0	0.17	1.2 UJ	1.2	0.20	1.9 UJ	1.9	0.33	1.1 U	1.1	0.19	1.0 U	1.0	0.17
Bromochloromethane	---	1.0 UJ	1.0	0.32	1.2 UJ	1.2	0.37	1.9 UJ	1.9	0.60	1.1 U	1.1	0.35	1.0 U	1.0	0.32

TABLE M-2
DIRECT-PUSH SOIL BORINGS SOIL ANALYTICAL RESULTS
BOEING ISAACSON-THOMPSON
REMEDIAL INVESTIGATION

	Preliminary Cleanup Level	IT-SB-1 (2-3) ST77D 04/25/2011			IT-SB-1 (5-6) ST77E 04/25/2011			IT-SB-1 (8-9) ST77F 04/25/2011			IT-SB-2(2-3.5) TU65H 10/31/2011			IT-SB-2(5-6.5) TU65I 10/31/2011		
		Result	Reporting Limit	Detection Limit	Result	Reporting Limit	Detection Limit	Result	Reporting Limit	Detection Limit	Result	Reporting Limit	Detection Limit	Result	Reporting Limit	Detection Limit
2,2-Dichloropropane	---	1.0 UJ	1.0	0.29	1.2 UJ	1.2	0.34	1.9 UJ	1.9	0.54	1.1 U	1.1	0.31	1.0 U	1.0	0.29
1,3-Dichloropropane	---	1.0 UJ	1.0	0.20	1.2 UJ	1.2	0.24	1.9 UJ	1.9	0.39	1.1 U	1.1	0.22	1.0 U	1.0	0.21
Isopropylbenzene	78,000	1.0 UJ	1.0	0.23	1.2 UJ	1.2	0.27	1.9 UJ	1.9	0.43	1.1 U	1.1	0.25	1.0 U	1.0	0.23
n-Propylbenzene	11,000	1.0 UJ	1.0	0.27	1.2 UJ	1.2	0.31	1.9 UJ	1.9	0.51	1.1 U	1.1	0.29	1.0 U	1.0	0.27
Bromobenzene	---	1.0 UJ	1.0	0.15	1.2 UJ	1.2	0.18	1.9 UJ	1.9	0.28	1.1 U	1.1	0.16	1.0 U	1.0	0.15
2-Chlorotoluene	---	1.0 UJ	1.0	0.29	1.2 UJ	1.2	0.35	1.9 UJ	1.9	0.56	1.1 U	1.1	0.32	1.0 U	1.0	0.30
4-Chlorotoluene	400,000	1.0 UJ	1.0	0.27	1.2 UJ	1.2	0.32	1.9 UJ	1.9	0.51	1.1 U	1.1	0.30	1.0 U	1.0	0.27
tert-Butylbenzene	---	1.0 UJ	1.0	0.30	1.2 UJ	1.2	0.35	1.9 UJ	1.9	0.57	1.1 U	1.1	0.33	1.0 U	1.0	0.30
sec-Butylbenzene	---	1.0 UJ	1.0	0.24	1.2 UJ	1.2	0.28	1.9 UJ	1.9	0.45	1.1 U	1.1	0.26	1.0 U	1.0	0.24
4-Isopropyltoluene	---	1.0 UJ	1.0	0.23	1.2 UJ	1.2	0.27	1.9 UJ	1.9	0.44	1.1 U	1.1	0.25	1.0 U	1.0	0.23
n-Butylbenzene	27,000	1.0 UJ	1.0	0.26	1.2 UJ	1.2	0.30	1.9 UJ	1.9	0.49	1.1 U	1.1	0.28	1.0 U	1.0	0.26
1,2,4-Trichlorobenzene	80	4.9 UJ	4.9	0.33	5.8 UJ	5.8	0.38	9.3 UJ	9.3	0.62	5.3 U	5.3	0.35	4.9 U	4.9	0.33
Naphthalene	2,100	4.9 UJ	4.9	0.42	5.8 UJ	5.8	0.49	9.3 UJ	9.3	0.80	5.3 U	5.3	0.46	4.9 U	4.9	0.42
1,2,3-Trichlorobenzene	---	4.9 UJ	4.9	0.30	5.8 UJ	5.8	0.35	9.3 UJ	9.3	0.57	5.3 U	5.3	0.33	4.9 U	4.9	0.30
SEMIVOLATILES (µg/kg)																
Method SW8270D																
Phenol	1,900,000	18 U	18	5.5	18 U	18	5.5	**62**	19	5.7	18 U	18	7.8	18 U	18	7.7
Bis-(2-Chloroethyl) Ether	---	18 U	18	1.8	18 U	18	1.8	19 U	19	1.8	18 U	18	3.0	18 U	18	3.0
2-Chlorophenol	---	18 U	18	3.2	18 U	18	3.2	19 U	19	3.3	18 U	18	2.2	18 U	18	2.1
1,3-Dichlorobenzene	3,840	18 U	18	2.2	18 U	18	2.2	19 U	19	2.3	18 U	18	2.4	18 U	18	2.3
1,4-Dichlorobenzene	3,500	18 U	18	1.4	18 U	18	1.4	19 U	19	1.4	18 U	18	2.6	18 U	18	2.6
Benzyl Alcohol	8,000,000	18 UJ	18	1.5	18 UJ	18	1.5	19 UJ	19	1.6	18 U	18	5.5	18 U	18	5.4
1,2-Dichlorobenzene	68,000	18 U	18	1.4	18 U	18	1.4	19 U	19	1.4	18 U	18	2.3	18 U	18	2.2
2-Methylphenol	250,000	18 U	18	1.9	18 U	18	1.9	19 U	19	2.0	18 U	18	4.7	18 U	18	4.7
2,2'-Oxybis(1-Chloropropane)	---	18 U	18	1.6	18 U	18	1.6	19 U	19	1.6	18 U	18	3.4	18 U	18	3.4
4-Methylphenol	41,000	18 U	18	4.5	18 U	18	4.5	**160**	19	4.6	36 U	36	6.0	36 U	36	5.9
N-Nitroso-Di-N-Propylamine	---	18 U	18	4.0	18 U	18	4.0	19 U	19	4.1	18 U	18	3.0	18 U	18	3.0
Hexachloroethane	---	18 U	18	2.5	18 U	18	2.5	19 U	19	2.6	18 U	18	2.7	18 U	18	2.6
Nitrobenzene	---	18 U	18	4.0	18 U	18	4.0	19 U	19	4.1	18 U	18	3.7	18 U	18	3.6
Isophorone	---	18 U	18	0.8	18 U	18	0.8	19 U	19	0.8	18 U	18	2.6	18 U	18	2.6
2-Nitrophenol	---	91 U	91	11	90 U	90	11	93 U	93	11	90 U	90	35	89 U	89	35
2,4-Dimethylphenol	95,000	18 U	18	1.7	18 U	18	1.7	19 U	19	1.8	36 U	36	3.1	36 U	36	3.1
Benzoic Acid	9,000	180 U	180	31	180 U	180	31	**470**	190	32	360 U	360	91	360 U	360	90
bis(2-Chloroethoxy) Methane	---	18 U	18	2.0	18 U	18	2.0	19 U	19	2.1	18 U	18	1.8	18 U	18	1.8
2,4-Dichlorophenol	---	91 U	91	8.3	90 U	90	8.3	93 U	93	8.5	180 U	180	19	180 U	180	19
1,2,4-Trichlorobenzene	80	18 U	18	2.7	18 U	18	2.7	19 U	19	2.8	18 U	18	3.1	18 U	18	3.1
Naphthalene	2,100	18 U	18	1.8	18 U	18	1.7	**60**	19	1.8	**11** J1	18	2.5	**21**	18	2.5
4-Chloroaniline	---	91 U	91	5.3	90 U	90	5.3	93 U	93	5.4	240 U	240	20	240 U	240	20
Hexachlorobutadiene	---	18 U	18	3.3	18 U	18	3.3	19 U	19	3.4	90 U	90	4.1	89 U	89	4.1
4-Chloro-3-methylphenol	740,000	91 U	91	7.7	90 U	90	7.7	93 U	93	7.9	90 U	90	14	89 U	89	13
2-Methylnaphthalene	320,000	18 U	18	2.2	18 U	18	2.2	**45**	19	2.2	18 U	18	2.8	**19**	18	2.7
Hexachlorocyclopentadiene	---	91 U	91	5.3	90 U	90	5.3	93 U	93	5.4	360 UJ	360	60	360 UJ	360	59
2,4,6-Trichlorophenol	---	91 U	91	6.5	90 U	90	6.5	93 U	93	6.7	90 U	90	20	89 U	89	20
2,4,5-Trichlorophenol	---	91 U	91	13	90 U	90	13	93 U	93	14	90 U	90	19	89 U	89	19
2-Chloronaphthalene	---	18 U	18	1.3	18 U	18	1.3	19 U	19	1.3	18 U	18	2.4	18 U	18	2.4
2-Nitroaniline	---	91 U	91	7.5	90 U	90	7.4	93 U	93	7.6	90 U	90	17	89 U	89	16
Dimethylphthalate	71	18 U	18	3.0	18 U	18	2.9	19 U	19	3.0	18 U	18	2.6	18 U	18	2.6
Acenaphthylene	---	18 U	18	1.8	18 U	18	1.7	19 U	19	1.8	18 U	18	5.2	18 U	18	5.1
3-Nitroaniline	---	91 U	91	5.4	90 U	90	5.3	93 U	93	5.5	90 U	90	20	89 U	89	20
Acenaphthene	230,000	18 U	18	1.5	18 U	18	1.5	**14** J	19	1.6	**21**	18	3.0	**36**	18	2.9
2,4-Dinitrophenol	---	190 UJ	190	6.2	190 UJ	190	6.2	200 UJ	200	6.4	770 U	770	100	760 U	760	99
4-Nitrophenol	---	91 U	91	10	90 U	90	10	93 U	93	11	90 UJ	90	31	89 UJ	89	31
Dibenzofuran	80,000	18 U	18	1.7	18 U	18	1.7	**32**	19	1.8	**11** J1	18	3.7	**22**	18	3.7
2,6-Dinitrotoluene	---	91 U	91	9.2	90 U	90	9.1	93 U	93	9.4	90 U	90	28	89 U	89	27
2,4-Dinitrotoluene	---	91 U	91	8.9	90 U	90	8.9	93 U	93	9.2	90 U	90	18	89 U	89	17
Diethylphthalate	178,000	18 U	18	4.4	18 U	18	4.4	19 U	19	4.5	45 U	45	33	45 U	45	33
4-Chlorophenyl-phenylether	---	18 U	18	1.6	18 U	18	1.6	19 U	19	1.6	18 U	18	4.8	18 U	18	4.7
Fluorene	150,000	18 U	18	1.5	18 U	18	1.5	**22**	19	1.5	**14** J1	18	3.9	**29**	18	3.9
4-Nitroaniline	---	91 U	81	5.6	90 U	90	5.6	93 U	93	5.8	90 U	90	34	89 U	89	34

TABLE M-2
DIRECT-PUSH SOIL BORINGS SOIL ANALYTICAL RESULTS
BOEING ISAACSON-THOMPSON
REMEDIAL INVESTIGATION

	Preliminary Cleanup Level	IT-SB-1 (2-3) ST77D 04/25/2011			IT-SB-1 (5-6) ST77E 04/25/2011			IT-SB-1 (8-9) ST77F 04/25/2011			IT-SB-2(2-3.5) TU65H 10/31/2011			IT-SB-2(5-6.5) TU65I 10/31/2011		
		Result	Reporting Limit	Detection Limit	Result	Reporting Limit	Detection Limit	Result	Reporting Limit	Detection Limit	Result	Reporting Limit	Detection Limit	Result	Reporting Limit	Detection Limit
4,6-Dinitro-2-Methylphenol	---	180 U	180	20	180 U	180	20	190 U	190	20	180 U	180	19	180 U	180	19
N-Nitrosodiphenylamine	204,000	18 U	18	4.5	18 U	18	4.4	19 U	19	4.6	18 U	18	4.9	18 U	18	4.8
4-Bromophenyl-phenylether	---	18 U	18	2.9	18 U	18	2.9	19 U	19	3.0	18 U	18	4.5	18 U	18	4.5
Hexachlorobenzene	---	18 U	18	1.7	18 U	18	1.7	19 U	19	1.8	18 U	18	3.9	18 U	18	3.8
Pentachlorophenol	---	91 UJ	91	8.7	90 UJ	90	8.7	93 UJ	93	9.0	180 UJ	180	44	180 UJ	180	43
Phenanthrene	---	**11** J	18	2.3	18 UJ	18	2.3	**110** J	19	2.4	**12** J1	18	3.3	**67**	18	3.2
Carbazole	50,000	18 U	18	2.3	18 U	18	2.3	19 U	19	2.3	18 U	18	2.4	18 U	18	2.4
Anthracene	1,600,000	18 U	18	1.9	18 U	18	1.9	**22**	19	2.0	18 U	18	4.1	**8.9** J1	18	4.0
Di-n-Butylphthalate	26,000	18 U	18	2.0	18 U	18	2.0	19 U	19	2.0	18 U	18	7.4	18 U	18	7.3
Fluoranthene	230,000	**21**	18	1.8	18 U	18	1.8	**91**	19	1.9	18 U	18	2.6	**40**	18	2.6
Pyrene	240,000	**13** J	18	1.3	18 U	18	1.3	**98**	19	1.4	18 U	18	1.8	**38**	18	1.7
Butylbenzylphthalate	1,700	18 UJ	18	2.3	18 UJ	18	2.3	19 UJ	19	2.4	18 U	18	5.5	**21** M	18	5.5
3,3'-Dichlorobenzidine	---	91 UJ	91	7.4	90 UJ	90	7.3	93 UJ	93	7.6	140 UJ	140	16	130 UJ	130	16
Benzo(a)anthracene	---	18 U	18	2.2	18 U	18	2.2	**32**	19	2.2	18 U	18	3.0	**15** J1	18	2.9
bis(2-Ethylhexyl)phthalate	56,600	**19**	18	3.7	**15** J	18	3.7	**39**	19	3.8	33 U	23	13	38 U	22	13
Chrysene	---	**12** J	18	1.7	18 U	18	1.7	**48** J	19	1.8	18 U	18	3.4	**50**	18	3.3
Di-n-Octyl phthalate	---	18 U	18	3.2	18 U	18	3.2	19 U	19	3.3	18 U	18	5.3	**12** J1	18	5.2
Benzo(a)pyrene	---	18 U	18	1.5	18 U	18	1.5	19 U	19	1.6	18 U	18	4.9	18 U	18	4.9
Indeno(1,2,3-cd)pyrene	---	18 U	18	2.1	18 U	18	2.1	**15** J	19	2.1	18 U	18	4.2	18 U	18	4.2
Dibenz(a,h)anthracene	---	18 U	18	2.1	18 U	18	2.1	19 U	19	2.1	18 U	18	3.9	18 U	18	3.8
Benzo(g,h,i)perylene	---	18 U	18	2.5	18 U	18	2.5	**20**	19	2.6	18 U	18	4.0	18 U	18	3.9
1-Methylnaphthalene	16,000	18 U	18	1.2	18 U	18	1.1	**30**	19	1.2	18 U	18	2.4	**14** J1	18	2.4
Total Benzofluoranthenes	---	**13** J	18	2.5	18 U	18	2.5	**58**	19	2.6	18 U	18	2.5	**22**	18	2.5
cPAH TEQ	15	**1**	NA	NA	ND	NA	NA	**11**	NA	NA	ND	NA	NA	**4** J	NA	NA
PAHs (µg/kg)																
Method SW8270D-SIM																
Naphthalene	2,100	**4.3** J	4.6	1.5	4.7 U	4.7	1.6	**23**	4.7	1.6	**11**	4.6	2.4	**9.8**	8.9	4.7
2-Methylnaphthalene	320,000	**6.0**	4.6	1.2	**2.9** J	4.7	1.3	**27**	4.7	1.3	**12**	4.6	1.4	**11**	8.9	2.7
1-Methylnaphthalene	16,000	**5.0**	4.6	1.5	**2.6** J	4.7	1.6	**22**	4.7	1.6	**6.8**	4.6	1.6	**9.9**	8.9	3.0
Total Naphthalenes	---	**15.3** J	NA	NA	**5.5** J	NA	NA	**72**	NA	NA	**29.8**	NA	NA	**30.7**	NA	NA
Acenaphthylene	---	4.6 U	4.6	1.0	4.7 U	4.7	1.0	**4.3** J	4.7	1.0	4.6 U	4.6	1.2	8.9 U	8.9	2.2
Acenaphthene	230,000	4.6 U	4.6	1.9	4.7 U	4.7	2.0	**14**	4.7	2.0	**25**	4.6	1.2	**24**	8.9	2.3
Fluorene	150,000	4.6 U	4.6	1.1	4.7 U	4.7	1.2	**13**	4.7	1.2	**18**	4.6	1.2	**17**	8.9	2.3
Phenanthrene	---	**24**	4.6	1.5	**7.5**	4.7	1.5	**55**	4.7	1.5	**20**	4.6	1.8	**39**	8.9	3.5
Anthracene	1,600,000	4.6 U	4.6	0.78	4.7 U	4.7	0.82	**11**	4.7	0.81	**3.0** J1	4.6	1.3	**5.5** J1	8.9	2.6
Fluoranthene	230,000	**33**	4.6	1.6	**4.5** J	4.7	1.7	**51**	4.7	1.7	**18**	4.6	1.6	**31**	8.9	3.1
Pyrene	240,000	**20**	4.6	0.96	**5.2**	4.7	1.0	**53**	4.7	0.99	**13**	4.6	2.0	**24**	8.9	3.9
Benzo(a)anthracene	---	**8.6**	4.6	1.2	4.7 U	4.7	1.3	**19**	4.7	1.3	**2.3** J1	4.6	1.5	**13**	8.9	2.8
Chrysene	---	**19**	4.6	1.5	**3.6** J	4.7	1.6	**25**	4.7	1.6	**3.2** J1	4.6	1.7	**47**	8.9	3.3
Benzo(a)pyrene	---	6.6 U	4.6	0.86	4.7 U	4.7	0.89	4.7 U	4.7	0.88	4.6 U	4.6	1.6	**8.9**	8.9	3.1
Indeno(1,2,3-cd)pyrene	---	5.4 U	4.6	1.9	4.7 U	4.7	1.9	7.5 U	4.7	1.9	4.6 U	4.6	3.2	8.9 U	8.9	6.2
Dibenz(a,h)anthracene	---	4.6 U	4.6	1.2	4.7 U	4.7	1.3	**2.8** J	4.7	1.2	4.6 U	4.6	2.2	8.9 U	8.9	4.2
Benzo(g,h,i)perylene	---	8.0 U	4.6	0.83	4.7 U	4.7	0.86	11 U	4.7	0.85	4.6 U	4.6	2.8	**14**	8.9	5.4
Dibenzofuran	80,000	**6.9**	4.6	1.2	4.7 U	4.7	1.3	**15**	4.7	1.3	**14**	4.6	1.4	**13**	8.9	2.7
Total Benzofluoranthenes	---	**20**	4.6	1.7	4.7 U	4.7	1.8	**34**	4.7	1.7	4.6 U	4.6	1.7	**21**	8.9	3.3
cPAH TEQ	15	**3.05**	NA	NA	**0.036**	NA	NA	**5.83**	NA	NA	**0.3** J	NA	NA	**12.8**	NA	NA

TABLE M-2
DIRECT-PUSH SOIL BORINGS SOIL ANALYTICAL RESULTS
BOEING ISAACSON-THOMPSON
REMEDIAL INVESTIGATION

	Preliminary Cleanup Level	IT-SB-1 (2-3) ST77D 04/25/2011			IT-SB-1 (5-6) ST77E 04/25/2011			IT-SB-1 (8-9) ST77F 04/25/2011			IT-SB-2(2-3.5) TU65H 10/31/2011			IT-SB-2(5-6.5) TU65I 10/31/2011		
		Result	Reporting Limit	Detection Limit	Result	Reporting Limit	Detection Limit	Result	Reporting Limit	Detection Limit	Result	Reporting Limit	Detection Limit	Result	Reporting Limit	Detection Limit
PCBs (µg/kg)																
Method SW8082																
Aroclor 1016	0.72	31 U	31	9.6	31 U	31	9.5	32 U	32	9.9	31 U	31	1.9	31 U	31	1.9
Aroclor 1242	0.72	31 U	31	12	31 U	31	12	32 U	32	12	31 U	31	2.3	31 U	31	2.3
Aroclor 1248	220	31 U	31	12	31 U	31	12	32 U	32	12	31 U	31	2.3	31 U	31	2.3
Aroclor 1254	0.29	31 U	31	12	31 U	31	12	**39**	32	12	31 U	31	2.3	31 U	31	2.3
Aroclor 1260	5.4	31 U	31	12	31 U	31	12	**36**	32	12	31 U	31	2.3	31 U	31	2.3
Aroclor 1221	---	31 U	31	12	31 U	31	12	32 U	32	12	31 U	31	2.3	31 U	31	2.3
Aroclor 1232	---	31 U	31	12	31 U	31	12	32 U	32	12	31 U	31	2.3	31 U	31	2.3
Total PCBs	1.8	ND	NA	NA	ND	NA	NA	**75**	NA	NA	ND	NA	NA	ND	NA	NA
TOTAL PETROLEUM HYDROCARBONS (mg/kg)																
NWTPH-Dx																
Diesel-Range Organics	2,000	**8.1**	5.1	0.80	**4.4** J	5.8	0.86	**51**	7.7	1.1	5.4 U	5.4	1.4	**32**	5.3	1.4
Oil-Range Organics	2,000	**80**	11	1.4	**9.7** J	12	1.5	**130**	15	2.0	11 U	11	1.7	**290**	11	1.7
NWTPH-G																
Gasoline-Range Organics	100/30	6.1 U	6.1	2.9	7.2 U	7.2	3.5	11 U	11	5.3	6.5 U	6.5	3.1	5.4 U	5.4	2.6
TOTAL METALS (mg/kg)																
Methods 200.8/7471A/SW7196A																
Antimony	5	0.2 U	0.2	0.014	0.2 U	0.2	0.014	0.3 U	0.3	0.019	0.2 U	0.2	0.013	0.2 U	0.2	0.014
Arsenic	7	**2.9**	0.2	0.094	**3.2**	0.2	0.0095	**11.2**	0.3	0.13	**1.7**	0.2	0.089	**2.3**	0.2	0.092
Barium	640	**43.2**	0.5	0.060	**46.8**	0.5	0.061	**85.0**	0.7	0.082	**47.4**	0.5	0.057	**46.4**	0.5	0.059
Beryllium	160	0.2 U	0.2	0.019	0.2 U	0.2	0.020	**0.5**	0.3	0.026	0.2 U	0.2	0.018	0.2 U	0.2	0.019
Cadmium	1.3	0.1 U	0.1	0.013	0.1 U	0.1	0.013	**0.8**	0.1	0.018	0.1 U	0.1	0.012	0.1 U	0.1	0.013
Chromium	1,480	**18.8**	0.5	0.041	**13.0**	0.5	0.041	**30**	4	0.28	**25.4**	0.5	0.039	**33.0**	0.5	0.040
Chromium VI	3.8	0.436 U	0.436	0.030	0.466 U	0.466	0.030	0.628 U	0.628	0.030	0.426 U	0.426	0.030	0.427 U	0.427	0.030
Copper	36	**18.1**	0.5	0.039	**19.6**	0.5	0.039	**43.0**	0.7	0.053	**12.4**	0.5	0.037	**17.8**	0.5	0.038
Lead	250	**4.0**	0.1	0.051	**5.6**	0.1	0.051	**16.7**	0.1	0.069	**2.4**	0.1	0.048	**4.3**	0.1	0.050
Mercury	1.5	**0.02**	0.02	0.0010	**0.03**	0.02	0.0012	**0.25**	0.03	0.0016	0.03 U	0.03	0.0013	0.02 U	0.02	0.0010
Nickel	210	**29.2**	0.5	0.053	**14.2**	0.5	0.053	**22.5**	0.7	0.072	**40.6**	0.5	0.050	**34.1**	0.5	0.052
Selenium	1.0	0.5 U	0.5	0.11	0.5 U	0.5	0.11	0.7 U	0.7	0.14	0.5 U	0.5	0.10	0.5 U	0.5	0.11
Silver	170	0.2 U	0.2	0.0086	0.2 U	0.2	0.0087	0.3 U	0.3	0.012	0.2 U	0.2	0.0082	0.2 U	0.2	0.0085
Thallium	0.67	0.2 U	0.2	0.0032	0.2 U	0.2	0.0033	0.3 U	0.3	0.0044	0.2 U	0.2	0.0031	0.2 U	0.2	0.0032
Zinc	1,400	**34**	4	0.37	**41**	4	0.37	**97**	6	0.50	**31**	4	0.35	**33**	4	0.36

TABLE M-2
DIRECT-PUSH SOIL BORINGS SOIL ANALYTICAL RESULTS
BOEING ISAACSON-THOMPSON
REMEDIAL INVESTIGATION

	Preliminary Cleanup Level	IT-SB-2(8-9.5) TU65J 10/31/2011			IT-SB-2(14-15.5) TU65K 10/31/2011			IT-SB-3(2-3.5) TW27E 11/08/2011			IT-SB-3(5-5.5) TX02I 11/14/2011			IT-SB-3(6.5-7) TX02J 11/14/2011		
		Result	Reporting Limit	Detection Limit	Result	Reporting Limit	Detection Limit	Result	Reporting Limit	Detection Limit	Result	Reporting Limit	Detection Limit	Result	Reporting Limit	Detection Limit
VOLATILES (µg/kg)																
Method SW8260C																
Chloromethane	1,600	1.2 U	1.2	0.32	1.1 U	1.1	0.28	1.2 U	1.2	0.31	1.2 U	1.2	0.32	0.6 U	0.6	0.17
Bromomethane	---	1.2 U	1.2	0.23	1.1 U	1.1	0.20	1.2 UJ	1.2	0.22	1.2 UJ	1.2	0.22	0.6 UJ	0.6	0.12
Vinyl Chloride	7.4	1.2 U	1.2	0.29	1.1 U	1.1	0.25	1.2 U	1.2	0.28	1.2 U	1.2	0.28	0.6 U	0.6	0.15
Chloroethane	280,000	1.2 U	1.2	0.56	1.1 U	1.1	0.49	1.2 U	1.2	0.54	1.2 U	1.2	0.55	0.6 U	0.6	0.30
Methylene Chloride	2400	**3.0** J	2.4	0.78	**2.4** J	2.1	0.68	**3.6**	2.3	0.75	**2.5**	2.4	0.76	**1.0** J1	1.3	0.41
Acetone	510,000	29 U	6.1	0.59	21 U	5.3	0.51	**8.6** J	5.9	0.57	**14** J	6.0	0.58	**33** J	3.2	0.31
Carbon Disulfide	75,000	1.2 U	1.2	0.68	**1.0** J1	1.1	0.59	1.2 U	1.2	0.66	1.2 U	1.2	0.67	**17**	0.6	0.36
1,1-Dichloroethene	81	1.2 U	1.2	0.41	1.1 U	1.1	0.36	1.2 U	1.2	0.39	1.2 U	1.2	0.40	0.6 U	0.6	0.22
1,1-Dichloroethane	710	1.2 U	1.2	0.25	1.1 U	1.1	0.22	1.2 UJ	1.2	0.24	1.2 U	1.2	0.24	0.6 U	0.6	0.13
trans-1,2-Dichloroethene	19,000	1.2 U	1.2	0.33	1.1 U	1.1	0.28	1.2 U	1.2	0.31	1.2 UJ	1.2	0.32	0.6 UJ	0.6	0.17
cis-1,2-Dichloroethene	2,600	1.2 U	1.2	0.29	1.1 U	1.1	0.26	1.2 U	1.2	0.28	1.2 U	1.2	0.29	0.6 U	0.6	0.16
Chloroform	200	1.2 U	1.2	0.29	1.1 U	1.1	0.25	1.2 U	1.2	0.27	1.2 U	1.2	0.28	0.6 U	0.6	0.15
1,2-Dichloroethane	70	1.2 U	1.2	0.23	1.1 U	1.1	0.20	1.2 U	1.2	0.22	1.2 U	1.2	0.23	0.6 U	0.6	0.12
2-Butanone	430,000	6.1 U	6.1	0.63	5.3 U	5.3	0.55	5.9 U	5.9	0.60	6.0 U	6.0	0.62	**5.6**	3.2	0.33
1,1,1-Trichloroethane	1,900,000	1.2 U	1.2	0.28	1.1 U	1.1	0.24	1.2 U	1.2	0.27	1.2 U	1.2	0.27	0.6 U	0.6	0.15
Carbon Tetrachloride	21	1.2 U	1.2	0.26	1.1 U	1.1	0.23	1.2 U	1.2	0.25	1.2 U	1.2	0.26	0.6 U	0.6	0.14
Vinyl Acetate	---	6.1 U	6.1	0.47	5.3 U	5.3	0.41	5.9 U	5.9	0.45	6.0 U	6.0	0.46	3.2 U	3.2	0.25
Bromodichloromethane	89	1.2 U	1.2	0.31	1.1 U	1.1	0.27	1.2 U	1.2	0.30	1.2 U	1.2	0.30	0.6 U	0.6	0.16
1,2-Dichloropropane	92	1.2 U	1.2	0.20	1.1 U	1.1	0.17	1.2 U	1.2	0.19	1.2 U	1.2	0.19	0.6 U	0.6	0.11
cis-1,3-Dichloropropene	---	1.2 U	1.2	0.28	1.1 U	1.1	0.24	1.2 U	1.2	0.27	1.2 U	1.2	0.27	0.6 U	0.6	0.15
Trichloroethene	51	1.2 U	1.2	0.26	1.1 U	1.1	0.23	1.2 U	1.2	0.25	**1.5**	1.2	0.25	**0.4** J1	0.6	0.14
Dibromochloromethane	---	1.2 U	1.2	0.33	1.1 U	1.1	0.28	1.2 U	1.2	0.31	1.2 U	1.2	0.32	0.6 U	0.6	0.17
1,1,2-Trichloroethane	73	1.2 U	1.2	0.35	1.1 U	1.1	0.30	1.2 U	1.2	0.34	1.2 U	1.2	0.34	0.6 U	0.6	0.19
Benzene	93	1.2 U	1.2	0.36	1.1 U	1.1	0.31	1.2 U	1.2	0.35	1.2 U	1.2	0.35	**0.5** J1	0.6	0.19
trans-1,3-Dichloropropene	---	1.2 U	1.2	0.26	1.1 U	1.1	0.23	1.2 U	1.2	0.25	1.2 U	1.2	0.26	0.6 U	0.6	0.14
2-Chloroethylvinylether	---	6.1 U	6.1	0.34	5.3 U	5.3	0.29	5.9 U	5.9	0.32	6.0 U	6.0	0.33	3.2 U	3.2	0.18
Bromoform	---	1.2 U	1.2	0.36	1.1 U	1.1	0.32	1.2 U	1.2	0.35	1.2 U	1.2	0.36	0.6 U	0.6	0.19
4-Methyl-2-Pentanone (MIBK)	170,000	6.1 U	6.1	0.51	5.3 U	5.3	0.45	5.9 U	5.9	0.49	6.0 U	6.0	0.50	3.2 U	3.2	0.27
2-Hexanone	32,000	6.1 U	6.1	0.54	5.3 U	5.3	0.47	5.9 U	5.9	0.52	6.0 U	6.0	0.53	3.2 U	3.2	0.28
Tetrachloroethene	260	1.2 U	1.2	0.31	1.1 U	1.1	0.27	1.2 U	1.2	0.30	1.2 U	1.2	0.31	0.6 U	0.6	0.17
1,1,2,2-Tetrachloroethane	13	1.2 U	1.2	0.31	1.1 U	1.1	0.27	1.2 U	1.2	0.30	1.2 U	1.2	0.30	0.6 U	0.6	0.16
Toluene	100,000	1.2 U	1.2	0.18	1.1 U	1.1	0.16	1.2 U	1.2	0.18	1.2 U	1.2	0.18	**0.3** J1	0.6	0.10
Chlorobenzene	26,000	1.2 U	1.2	0.27	1.1 U	1.1	0.23	1.2 U	1.2	0.26	1.2 U	1.2	0.26	0.6 U	0.6	0.14
Ethylbenzene	230	1.2 U	1.2	0.25	1.1 U	1.1	0.21	1.2 U	1.2	0.24	1.2 U	1.2	0.24	0.6 U	0.6	0.13
Styrene	16,000,000	1.2 U	1.2	0.17	1.1 U	1.1	0.15	1.2 U	1.2	0.16	1.2 U	1.2	0.17	0.6 U	0.6	0.09
Trichlorofluoromethane	200,000	1.2 U	1.2	0.33	1.1 U	1.1	0.28	1.2 U	1.2	0.31	1.2 U	1.2	0.32	**0.3** J1	0.6	0.17
1,1,2-Trichloro-1,2,2-trifuoroethane	1,000,000,000	2.4 U	2.4	0.35	2.1 U	2.1	0.31	2.3 U	2.3	0.34	2.4 U	2.4	0.34	1.3 U	1.3	0.19
m,p-Xylene	160,000	1.2 U	1.2	0.48	1.1 U	1.1	0.42	1.2 U	1.2	0.46	1.2 U	1.2	0.47	0.6 U	0.6	0.25
o-Xylene	200,000	1.2 U	1.2	0.27	1.1 U	1.1	0.24	1.2 U	1.2	0.26	1.2 U	1.2	0.27	0.6 U	0.6	0.15
1,2-Dichlorobenzene	68,000	1.2 U	1.2	0.36	1.1 U	1.1	0.31	1.2 U	1.2	0.34	1.2 U	1.2	0.35	0.6 U	0.6	0.19
1,3-Dichlorobenzene	3,840	1.2 U	1.2	0.28	1.1 U	1.1	0.24	1.2 U	1.2	0.27	1.2 U	1.2	0.27	0.6 U	0.6	0.15
1,4-Dichlorobenzene	3,500	1.2 U	1.2	0.28	1.1 U	1.1	0.25	1.2 U	1.2	0.27	1.2 U	1.2	0.28	0.6 U	0.6	0.15
Acrolein	---	61 U	61	4.7	53 U	53	4.1	59 UJ	59	4.5	60 UJ	60	4.6	32 UJ	32	2.5
Methyl Iodide	---	1.2 U	1.2	0.26	1.1 U	1.1	0.23	1.2 U	1.2	0.25	1.2 U	1.2	0.26	0.6 U	0.6	0.14
Bromoethane	---	2.4 U	2.4	0.54	2.1 U	2.1	0.47	2.3 U	2.3	0.52	2.4 U	2.4	0.53	1.3 U	1.3	0.29
Acrylonitrile	---	6.1 U	6.1	1.3	5.3 U	5.3	1.1	5.9 U	5.9	1.2	6.0 U	6.0	1.2	3.2 U	3.2	0.67
1,1-Dichloropropene	---	1.2 U	1.2	0.38	1.1 U	1.1	0.33	1.2 U	1.2	0.37	1.2 U	1.2	0.37	0.6 U	0.6	0.20
Dibromomethane	---	1.2 U	1.2	0.18	1.1 U	1.1	0.16	1.2 U	1.2	0.17	1.2 U	1.2	0.18	0.6 U	0.6	0.10
1,1,1,2-Tetrachloroethane	---	1.2 U	1.2	0.28	1.1 U	1.1	0.25	1.2 U	1.2	0.27	1.2 U	1.2	0.28	0.6 U	0.6	0.15
1,2-Dibromo-3-chloropropane	---	6.1 U	6.1	0.72	5.3 U	5.3	0.62	5.9 U	5.9	0.69	6.0 U	6.0	0.70	3.2 U	3.2	0.38
1,2,3-Trichloropropane	---	2.4 U	2.4	0.63	2.1 U	2.1	0.55	2.3 U	2.3	0.61	2.4 U	2.4	0.62	1.3 U	1.3	0.34
trans-1,4-Dichloro-2-butene	---	6.1 U	6.1	0.53	5.3 U	5.3	0.46	5.9 U	5.9	0.51	6.0 U	6.0	0.52	3.2 U	3.2	0.28
1,3,5-Trimethylbenzene	800,000	1.2 U	1.2	0.31	1.1 U	1.1	0.27	1.2 U	1.2	0.30	1.2 U	1.2	0.30	0.6 U	0.6	0.16
1,2,4-Trimethylbenzene	800,000	1.2 U	1.2	0.28	1.1 U	1.1	0.24	1.2 U	1.2	0.27	1.2 U	1.2	0.28	0.6 U	0.6	0.15
Hexachlorobutadiene	---	6.1 U	6.1	0.50	5.3 U	5.3	0.44	5.9 U	5.9	0.48	6.0 U	6.0	0.49	3.2 U	3.2	0.27
Ethylene Dibromide	---	1.2 U	1.2	0.22	1.1 U	1.1	0.19	1.2 U	1.2	0.21	1.2 U	1.2	0.21	0.6 U	0.6	0.11
Bromochloromethane	---	1.2 U	1.2	0.39	1.1 U	1.1	0.34	1.2 U	1.2	0.38	1.2 UJ	1.2	0.39	0.6 UJ	0.6	0.21

TABLE M-2
DIRECT-PUSH SOIL BORINGS SOIL ANALYTICAL RESULTS
BOEING ISAACSON-THOMPSON
REMEDIAL INVESTIGATION

	Preliminary Cleanup Level	IT-SB-2(8-9.5) TU65J 10/31/2011			IT-SB-2(14-15.5) TU65K 10/31/2011			IT-SB-3(2-3.5) TW27E 11/08/2011			IT-SB-3(5-5.5) TX02I 11/14/2011			IT-SB-3(6.5-7) TX02J 11/14/2011		
		Result	Reporting Limit	Detection Limit	Result	Reporting Limit	Detection Limit	Result	Reporting Limit	Detection Limit	Result	Reporting Limit	Detection Limit	Result	Reporting Limit	Detection Limit
2,2-Dichloropropane	---	1.2 U	1.2	0.36	1.1 U	1.1	0.31	1.2 U	1.2	0.34	1.2 U	1.2	0.35	0.6 U	0.6	0.19
1,3-Dichloropropane	---	1.2 U	1.2	0.26	1.1 U	1.1	0.22	1.2 U	1.2	0.25	1.2 U	1.2	0.25	0.6 U	0.6	0.14
Isopropylbenzene	78,000	1.2 U	1.2	0.28	1.1 U	1.1	0.25	1.2 U	1.2	0.27	1.2 U	1.2	0.28	0.6 U	0.6	0.15
n-Propylbenzene	11,000	1.2 U	1.2	0.33	1.1 U	1.1	0.29	1.2 U	1.2	0.32	1.2 U	1.2	0.33	0.6 U	0.6	0.18
Bromobenzene	---	1.2 U	1.2	0.19	1.1 U	1.1	0.16	1.2 U	1.2	0.18	1.2 U	1.2	0.18	0.6 U	0.6	0.10
2-Chlorotoluene	---	1.2 U	1.2	0.37	1.1 U	1.1	0.32	1.2 U	1.2	0.35	1.2 U	1.2	0.36	0.6 U	0.6	0.19
4-Chlorotoluene	400,000	1.2 U	1.2	0.34	1.1 U	1.1	0.29	1.2 U	1.2	0.33	1.2 U	1.2	0.33	0.6 U	0.6	0.18
tert-Butylbenzene	---	1.2 U	1.2	0.37	1.1 U	1.1	0.33	1.2 U	1.2	0.36	1.2 U	1.2	0.37	0.6 U	0.6	0.20
sec-Butylbenzene	---	1.2 U	1.2	0.29	1.1 U	1.1	0.26	1.2 U	1.2	0.28	1.2 U	1.2	0.29	0.6 U	0.6	0.16
4-Isopropyltoluene	---	1.2 U	1.2	0.29	1.1 U	1.1	0.25	1.2 U	1.2	0.28	1.2 U	1.2	0.28	0.6 U	0.6	0.15
n-Butylbenzene	27,000	1.2 U	1.2	0.32	1.1 U	1.1	0.28	1.2 U	1.2	0.31	1.2 U	1.2	0.31	0.6 U	0.6	0.17
1,2,4-Trichlorobenzene	80	6.1 U	6.1	0.41	5.3 U	5.3	0.35	5.9 U	5.9	0.39	6.0 U	6.0	0.40	3.2 U	3.2	0.22
Naphthalene	2,100	6.1 U	6.1	0.52	5.3 U	5.3	0.46	5.9 U	5.9	0.50	6.0 U	6.0	0.51	3.2 U	3.2	0.28
1,2,3-Trichlorobenzene	---	6.1 U	6.1	0.37	5.3 U	5.3	0.32	5.9 U	5.9	0.36	6.0 U	6.0	0.37	3.2 U	3.2	0.20
SEMIVOLATILES (µg/kg)																
Method SW8270D																
Phenol	1,900,000	18 U	18	7.6	19 U	19	8.1	19 U	19	8.4	18 U	18	7.6	20 UJ	20	8.6
Bis-(2-Chloroethyl) Ether	---	18 U	18	2.9	19 U	19	3.1	19 U	19	3.2	18 U	18	3.0	20 U	20	3.3
2-Chlorophenol	---	18 U	18	2.1	19 U	19	2.2	19 U	19	2.3	18 U	18	2.1	20 UJ	20	2.4
1,3-Dichlorobenzene	3,840	18 U	18	2.3	19 U	19	2.5	19 U	19	2.5	18 U	18	2.3	**14** J1	20	2.6
1,4-Dichlorobenzene	3,500	18 U	18	2.5	19 U	19	2.7	19 U	19	2.8	18 U	18	2.5	20 U	20	2.8
Benzyl Alcohol	8,000,000	18 U	18	5.3	19 U	19	5.7	19 U	19	5.9	18 U	18	5.4	20 U	20	6.0
1,2-Dichlorobenzene	68,000	18 U	18	2.2	19 U	19	2.3	19 U	19	2.4	18 U	18	2.2	20 U	20	2.5
2-Methylphenol	250,000	18 U	18	4.6	19 U	19	4.9	19 U	19	5.1	18 U	18	4.6	20 UJ	20	5.2
2,2'-Oxybis(1-Chloropropane)	---	18 U	18	3.3	19 U	19	3.5	19 U	19	3.6	18 U	18	3.3	20 U	20	3.7
4-Methylphenol	41,000	35 U	35	5.8	38 U	38	6.2	39 U	39	6.4	35 U	35	5.9	40 UJ	40	6.6
N-Nitroso-Di-N-Propylamine	---	18 U	18	2.9	19 U	19	3.1	19 U	19	3.2	18 U	18	3.0	20 U	20	3.3
Hexachloroethane	---	18 U	18	2.6	19 U	19	2.8	19 U	19	2.8	18 U	18	2.6	20 U	20	2.9
Nitrobenzene	---	18 U	18	3.6	19 U	19	3.8	19 U	19	3.9	18 U	18	3.6	20 U	20	4.0
Isophorone	---	18 U	18	2.5	19 U	19	2.7	19 U	19	2.8	18 U	18	2.5	**300**	20	2.8
2-Nitrophenol	---	88 U	88	34	94 U	94	36	97 U	97	37	88 U	88	34	99 UJ	99	38
2,4-Dimethylphenol	95,000	35 U	35	3.0	38 U	38	3.2	39 U	39	3.3	35 U	35	3.1	40 UJ	40	3.4
Benzoic Acid	9,000	350 U	350	88	380 U	380	95	390 U	390	98	350 U	350	89	400 UJ	400	100
bis(2-Chloroethoxy) Methane	---	18 U	18	1.8	19 U	19	1.9	19 U	19	1.9	18 U	18	1.8	20 U	20	2.0
2,4-Dichlorophenol	---	180 U	180	19	190 U	190	20	190 U	190	21	180 U	180	19	200 UJ	200	21
1,2,4-Trichlorobenzene	80	18 U	18	3.0	19 U	19	3.3	19 U	19	3.4	18 U	18	3.1	20 U	20	3.4
Naphthalene	2,100	18 U	18	2.4	19 U	19	2.6	19 U	19	2.7	18 U	18	2.4	**25**	20	2.7
4-Chloroaniline	---	240 U	240	20	250 U	250	21	260 U	260	22	240 U	240	20	270 U	270	22
Hexachlorobutadiene	---	88 U	88	4.0	94 U	94	4.3	97 U	97	4.4	88 U	88	4.0	99 U	99	4.5
4-Chloro-3-methylphenol	740,000	88 U	88	13	94 U	94	14	97 U	97	15	88 U	88	13	99 UJ	99	15
2-Methylnaphthalene	320,000	18 U	18	2.7	19 U	19	2.9	19 U	19	3.0	18 U	18	2.7	**14** J1	20	3.0
Hexachlorocyclopentadiene	---	350 UJ	350	58	380 UJ	380	62	390 U	390	64	350 U	350	59	400 U	400	66
2,4,6-Trichlorophenol	---	88 U	88	20	94 U	94	21	97 U	97	22	88 U	88	20	99 UJ	99	22
2,4,5-Trichlorophenol	---	88 U	88	19	94 U	94	20	97 U	97	21	88 U	88	19	99 UJ	99	21
2-Chloronaphthalene	---	18 U	18	2.3	19 U	19	2.5	19 U	19	2.6	18 U	18	2.3	20 U	20	2.6
2-Nitroaniline	---	88 U	88	16	94 U	94	17	97 U	97	18	88 U	88	16	99 U	99	18
Dimethylphthalate	71	18 U	18	2.5	19 U	19	2.7	19 U	19	2.8	18 U	18	2.6	20 U	20	2.9
Acenaphthylene	---	18 U	18	5.0	19 U	19	5.3	19 U	19	5.5	18 U	18	5.0	20 U	20	5.7
3-Nitroaniline	---	88 U	88	20	94 U	94	21	97 U	97	22	88 U	88	20	99 U	99	22
Acenaphthene	230,000	18 U	18	2.9	19 U	19	3.1	19 U	19	3.2	18 U	18	2.9	20 U	20	3.2
2,4-Dinitrophenol	---	740 U	740	97	800 U	800	100	820 U	820	110	750 UJ	750	98	840 UJ	840	110
4-Nitrophenol	---	88 UJ	88	30	94 UJ	94	32	97 U	97	34	88 U	88	31	99 UJ	99	34
Dibenzofuran	80,000	18 U	18	3.6	19 U	19	3.8	19 U	19	4.0	18 U	18	3.6	20 U	20	4.1
2,6-Dinitrotoluene	---	88 U	88	27	94 U	94	29	97 U	97	30	88 U	88	27	99 U	99	30
2,4-Dinitrotoluene	---	88 U	88	17	94 U	94	18	97 U	97	19	88 U	88	17	99 U	99	19
Diethylphthalate	178,000	44 U	44	32	47 U	47	34	48 U	48	35	44 U	44	32	50 U	50	36
4-Chlorophenyl-phenylether	---	18 U	18	4.6	19 U	19	5.0	19 U	19	5.1	18 U	18	4.7	20 U	20	5.2
Fluorene	150,000	18 U	18	3.8	19 U	19	4.1	19 U	19	4.2	18 U	18	3.8	20 U	20	4.3
4-Nitroaniline	---	88 U	88	33	94 U	94	35	97 U	97	37	88 U	88	34	99 U	99	38

TABLE M-2
DIRECT-PUSH SOIL BORINGS SOIL ANALYTICAL RESULTS
BOEING ISAACSON-THOMPSON
REMEDIAL INVESTIGATION

	Preliminary Cleanup Level	IT-SB-2(8-9.5) TU65J 10/31/2011			IT-SB-2(14-15.5) TU65K 10/31/2011			IT-SB-3(2-3.5) TW27E 11/08/2011			IT-SB-3(5-5.5) TX02I 11/14/2011			IT-SB-3(6.5-7) TX02J 11/14/2011		
		Result	Reporting Limit	Detection Limit	Result	Reporting Limit	Detection Limit	Result	Reporting Limit	Detection Limit	Result	Reporting Limit	Detection Limit	Result	Reporting Limit	Detection Limit
4,6-Dinitro-2-Methylphenol	---	180 U	180	19	190 U	190	20	190 U	190	20	180 U	180	19	200 UJ	200	21
N-Nitrosodiphenylamine	204,000	18 U	18	4.7	19 U	19	5.0	19 U	19	5.2	18 U	18	4.8	20 U	20	5.3
4-Bromophenyl-phenylether	---	18 U	18	4.4	19 U	19	4.7	19 U	19	4.9	18 U	18	4.4	20 U	20	5.0
Hexachlorobenzene	---	18 U	18	3.8	19 U	19	4.0	19 U	19	4.1	18 U	18	3.8	20 U	20	4.2
Pentachlorophenol	---	180 UJ	180	42	190 UJ	190	45	190 U	190	47	180 U	180	43	200 UJ	200	48
Phenanthrene	---	18 U	18	3.2	19 U	19	3.4	19 U	19	3.5	**16** J1	18	3.2	**33**	20	3.6
Carbazole	50,000	18 U	18	2.4	19 U	19	2.5	19 U	19	2.6	18 U	18	2.4	20 U	20	2.7
Anthracene	1,600,000	18 U	18	3.9	19 U	19	4.2	19 U	19	4.3	18 U	18	4.0	20 U	20	4.5
Di-n-Butylphthalate	26,000	18 U	18	7.1	19 U	19	7.6	19 U	19	7.9	18 U	18	7.2	20 U	20	8.1
Fluoranthene	230,000	18 U	18	2.5	19 U	19	2.7	19 U	19	2.8	**19**	18	2.6	**19** J1	20	2.9
Pyrene	240,000	18 U	18	1.7	19 U	19	1.8	19 U	19	1.9	**36** J	18	1.7	**36** J	20	1.9
Butylbenzylphthalate	1,700	18 U	18	5.4	19 U	19	5.7	19 U	19	5.9	18 U	18	5.4	20 U	20	6.1
3,3'-Dichlorobenzidine	---	130 UJ	130	16	140 UJ	140	17	140 U	140	17	130 U	130	16	150 U	150	18
Benzo(a)anthracene	---	18 U	18	2.9	19 U	19	3.1	19 U	19	3.2	**12** J1	18	2.9	**11** J1	20	3.3
bis(2-Ethylhexyl)phthalate	56,600	22 U	22	13	23 U	23	14	**21** J1	24	14	**530**	22	13	25 U	25	14
Chrysene	---	18 U	18	3.3	19 U	19	3.5	19 U	19	3.6	**22**	18	3.3	**18** J1	20	3.7
Di-n-Octyl phthalate	---	18 U	18	5.1	19 U	19	5.5	19 U	19	5.6	18 U	18	5.2	20 U	20	5.8
Benzo(a)pyrene	---	18 U	18	4.8	19 U	19	5.1	19 U	19	5.3	**8.8** J1	18	4.8	**11** J1	20	5.4
Indeno(1,2,3-cd)pyrene	---	18 U	18	4.1	19 U	19	4.4	19 U	19	4.5	18 U	18	4.1	20 U	20	4.6
Dibenz(a,h)anthracene	---	18 U	18	3.8	19 U	19	4.0	19 U	19	4.2	18 U	18	3.8	20 U	20	4.3
Benzo(g,h,i)perylene	---	18 U	18	3.9	19 U	19	4.1	19 U	19	4.3	**12** J1	18	3.9	20 U	20	4.4
1-Methylnaphthalene	16,000	18 U	18	2.3	19 U	19	2.5	19 U	19	2.6	18 U	18	2.4	20 U	20	2.7
Total Benzofluoranthenes	---	18 U	18	2.4	19 U	19	2.6	19 U	19	2.7	**22**	18	2.4	**21**	20	2.7
cPAH TEQ	15	ND	NA	NA	ND	NA	NA	ND	NA	NA	**12** J	NA	NA	**14** J	NA	NA
PAHs (µg/kg)																
Method SW8270D-SIM																
Naphthalene	2,100	4.9 U	4.9	2.6	4.7 U	4.7	2.5	4.8 U	4.8	2.5	**5.9**	4.3	2.3	**13**	4.8	2.5
2-Methylnaphthalene	320,000	4.9 U	4.9	1.5	**2.5** J1	4.7	1.4	4.8 U	4.8	1.5	**11**	4.3	1.3	**8.4**	4.8	1.5
1-Methylnaphthalene	16,000	4.9 U	4.9	1.7	4.7 U	4.7	1.6	4.8 U	4.8	1.6	**9.2**	4.3	1.5	**5.8**	4.8	1.6
Total Naphthalenes	---	4.9 U	NA	NA	**2.5** J1	NA	NA	4.8 U	NA	NA	**26.1**	NA	NA	**27.2**	NA	NA
Acenaphthylene	---	4.9 U	4.9	1.2	4.7 U	4.7	1.2	4.8 U	4.8	1.2	4.3 U	4.3	1.1	4.8 U	4.8	1.2
Acenaphthene	230,000	4.9 U	4.9	1.3	**2.5** J1	4.7	1.3	4.8 U	4.8	1.3	4.3 U	4.3	1.1	**5.8**	4.8	1.3
Fluorene	150,000	4.9 U	4.9	1.3	4.7 U	4.7	1.2	4.8 U	4.8	1.2	**2.5** J1	4.3	1.1	**2.9** J1	4.8	1.2
Phenanthrene	---	4.9 U	4.9	1.9	**5.1**	4.7	1.9	4.8 U	4.8	1.9	**27**	4.3	1.7	**20**	4.8	1.9
Anthracene	1,600,000	4.9 U	4.9	1.4	4.7 U	4.7	1.4	4.8 U	4.8	1.4	**3.0** J1	4.3	1.3	**3.4** J1	4.8	1.4
Fluoranthene	230,000	4.9 U	4.9	1.7	**3.6** J1	4.7	1.7	4.8 U	4.8	1.7	**30**	4.3	1.5	**20**	4.8	1.7
Pyrene	240,000	4.9 U	4.9	2.2	**4.1** J1	4.7	2.1	4.8 U	4.8	2.1	**34**	4.3	1.9	**21**	4.8	2.1
Benzo(a)anthracene	---	4.9 U	4.9	1.6	4.7 U	4.7	1.5	4.8 U	4.8	1.5	**19**	4.3	1.4	**9.1**	4.8	1.5
Chrysene	---	4.9 U	4.9	1.8	**7.6**	4.7	1.8	4.8 U	4.8	1.8	**42**	4.3	1.6	**14**	4.8	1.8
Benzo(a)pyrene	---	4.9 U	4.9	1.7	**4.3** J1	4.7	1.7	4.8 U	4.8	1.7	**19**	4.3	1.5	**8.2**	4.8	1.7
Indeno(1,2,3-cd)pyrene	---	4.9 U	4.9	3.4	4.7 U	4.7	3.3	4.8 U	4.8	3.3	**11**	4.3	3.0	4.8 U	4.8	3.3
Dibenz(a,h)anthracene	---	4.9 U	4.9	2.3	4.7 U	4.7	2.3	4.8 U	4.8	2.3	**7.4**	4.3	2.1	**2.8** J1	4.8	2.3
Benzo(g,h,i)perylene	---	4.9 U	4.9	3.0	4.7 U	4.7	2.9	4.8 U	4.8	2.9	**22**	4.3	2.6	**4.8**	4.8	2.9
Dibenzofuran	80,000	4.9 U	4.9	1.5	4.7 U	4.7	1.4	4.8 U	4.8	1.5	**4.4**	4.3	1.3	4.8 U	4.8	1.4
Total Benzofluoranthenes	---	4.9 U	4.9	1.8	4.7 U	4.7	1.8	4.8 U	4.8	1.8	**31**	4.3	1.6	**12**	4.8	1.8
cPAH TEQ	15	ND	NA	NA	**4.4** J	NA	NA	ND	NA	NA	**26**	NA	NA	**10.7** J	NA	NA

TABLE M-2
DIRECT-PUSH SOIL BORINGS SOIL ANALYTICAL RESULTS
BOEING ISAACSON-THOMPSON
REMEDIAL INVESTIGATION

	Preliminary Cleanup Level	IT-SB-2(8-9.5) TU65J 10/31/2011			IT-SB-2(14-15.5) TU65K 10/31/2011			IT-SB-3(2-3.5) TW27E 11/08/2011			IT-SB-3(5-5.5) TX02I 11/14/2011			IT-SB-3(6.5-7) TX02J 11/14/2011		
		Result	Reporting Limit	Detection Limit	Result	Reporting Limit	Detection Limit	Result	Reporting Limit	Detection Limit	Result	Reporting Limit	Detection Limit	Result	Reporting Limit	Detection Limit
PCBs (µg/kg)																
Method SW8082																
Aroclor 1016	0.72	31 U	31	1.9	33 U	33	2.0	31 U	31	1.9	31 U	31	1.9	30 U	30	1.8
Aroclor 1242	0.72	31 U	31	2.3	33 U	33	2.4	31 U	31	2.3	31 U	31	2.3	30 U	30	2.2
Aroclor 1248	220	31 U	31	2.3	33 U	33	2.4	31 U	31	2.3	31 U	31	2.3	30 U	30	2.2
Aroclor 1254	0.29	31 U	31	2.3	33 U	33	2.4	31 U	31	2.3	**120**	31	2.3	**54**	30	2.2
Aroclor 1260	5.4	31 U	31	2.3	33 U	33	2.4	31 U	31	2.3	**25** J1	31	2.3	**28** J1	30	2.2
Aroclor 1221	---	31 U	31	2.3	33 U	33	2.4	31 U	31	2.3	31 U	31	2.3	30 U	30	2.2
Aroclor 1232	---	31 U	31	2.3	33 U		2.4	31 U	31	2.3	31 U	31	2.3	30 U	30	2.2
Total PCBs	1.8	ND	NA	NA	ND	NA	NA	ND	NA	NA	**145** J	NA	NA	**82**	NA	NA
TOTAL PETROLEUM HYDROCARBONS (mg/kg)																
NWTPH-Dx																
Diesel-Range Organics	2,000	5.1 U	5.1	1.3	5.5 U	5.5	1.4	5.3 U	5.3	1.4	**23**	5.3	1.4	**24**	5.3	1.4
Oil-Range Organics	2,000	10 U	10	1.6	11 U	11	1.7	11 U	11	1.7	**100**	11	1.7	**65**	11	1.7
NWTPH-G																
Gasoline-Range Organics	100/30	6.9 U	6.9	3.3	6.2 U	6.2	2.9	5.5 U	5.5	2.6	5.6 U	5.6	2.7	4.1 U	4.1	2.0
TOTAL METALS (mg/kg)																
Methods 200.8/7471A/SW7196A																
Antimony	5	0.2 U	0.2	0.014	0.2 U	0.2	0.014	0.2 U	0.2	0.014	0.2 U	0.2	0.014	**0.7**	0.2	0.013
Arsenic	7	**1.8**	0.2	0.094	**1.7**	0.2	0.095	**2.7**	0.2	0.091	**4.0**	0.2	0.095	**40.1**	0.2	0.088
Barium	640	**44.3**	0.5	0.060	**47.9**	0.5	0.061	**38.8**	0.5	0.059	**60.3**	0.5	0.061	**30.1**	0.5	0.056
Beryllium	160	0.2 U	0.2	0.019	**0.2**	0.2	0.020	0.2 U	0.2	0.019	**0.2**	0.2	0.020	0.2 U	0.2	0.018
Cadmium	1.3	0.1 U	0.1	0.013	0.1 U	0.1	0.013	0.1 U	0.1	0.013	**0.2**	0.1	0.013	**0.3**	0.1	0.012
Chromium	1,480	**24.4**	0.5	0.041	**33.1**	0.5	0.041	**19.1**	0.5	0.040	**39.5**	0.5	0.042	**930**	10	0.96
Chromium VI	3.8	0.438 U	0.438	0.030	0.432 U	0.432	0.030	0.411 U	0.411	0.030	0.429 U	0.429	0.030	0.426 U	0.426	0.030
Copper	36	**11.4**	0.5	0.039	**13.7**	0.5	0.039	**17.5**	0.5	0.038	**43.5**	0.5	0.039	**780**	10	0.91
Lead	250	**2.0**	0.1	0.051	**2.2**	0.1	0.051	**2.7**	0.1	0.049	**39.6**	0.1	0.052	**31.3**	0.1	0.047
Mercury	1.5	0.03 U	0.03	0.0013	0.03 U	0.03	0.0013	0.02 U	0.02	0.0010	**0.03**	0.02	0.0013	0.02 U	0.02	0.0013
Nickel	210	**38.6**	0.5	0.053	**39.2**	0.5	0.053	**25.5**	0.5	0.051	**67.4**	0.5	0.054	**4940**	10	1.2
Selenium	1.0	0.5 U	0.5	0.11	0.5 U	0.5	0.11	0.5 U	0.5	0.10	0.5 U	0.5	0.11	0.5 U	0.5	0.1
Silver	170	0.2 U	0.2	0.0086	0.2 U	0.2	0.0087	0.2 U	0.2	0.0084	0.2 U	0.2	0.0088	0.3	0.3	0.0081
Thallium	0.67	0.2 U	0.2	0.0032	0.2 U	0.2	0.0033	0.2 U	0.2	0.0032	0.2 U	0.2	0.0033	0.2 U	0.2	0.0030
Zinc	1,400	**29**	4	0.36	**30**	4	0.37	**38**	4	0.36	**66**	4	0.37	**39**	4	0.34

TABLE M-2
DIRECT-PUSH SOIL BORINGS SOIL ANALYTICAL RESULTS
BOEING ISAACSON-THOMPSON
REMEDIAL INVESTIGATION

	Preliminary Cleanup Level	IT-SB-4(2-3.5) TU90E 11/01/2011			IT-SB-4(5-6.5) TU90R 11/01/2011			IT-SB-4(8-9) TU90F 11/01/2011			IT-SB-4(11.5-13) TU90G 11/01/2011			IT-SB-5(2-3.5) TU65L 10/31/2011		
		Result	Reporting Limit	Detection Limit	Result	Reporting Limit	Detection Limit	Result	Reporting Limit	Detection Limit	Result	Reporting Limit	Detection Limit	Result	Reporting Limit	Detection Limit
VOLATILES (µg/kg)																
Method SW8260C																
Chloromethane	1,600	1.2 U	1.2	0.31	1.4 UJ	1.4	0.38	1.4 U	1.4	0.36	1.2 U	1.2	0.31	1.1 U	1.1	0.28
Bromomethane	---	1.2 UJ	1.2	0.22	1.4 UJ	1.4	0.27	1.4 UJ	1.4	0.25	1.2 UJ	1.2	0.22	1.1 U	1.1	0.20
Vinyl Chloride	7.4	1.2 U	1.2	0.27	1.4 U	1.4	0.34	1.4 U	1.4	0.32	1.2 U	1.2	0.27	1.1 U	1.1	0.25
Chloroethane	280,000	1.2 U	1.2	0.54	1.4 U	1.4	0.66	1.4 U	1.4	0.62	1.2 U	1.2	0.54	1.1 U	1.1	0.49
Methylene Chloride	2400	**2.0** J1	2.3	0.74	**1.6** J, J1	2.9	0.91	**2.4** J1	2.7	0.86	**1.6** J1	2.3	0.74	**2.0** J, J1	2.1	0.67
Acetone	510,000	**66** J	5.8	0.56	**36** J	7.2	0.69	20 UJ	6.8	0.65	18 UJ	5.8	0.56	**95**	5.3	0.51
Carbon Disulfide	75,000	**2.3**	1.2	0.65	1.4 U	1.4	0.80	1.4 U	1.4	0.76	**1.3**	1.2	0.65	**1.1**	1.1	0.59
1,1-Dichloroethene	81	1.2 U	1.2	0.39	1.4 U	1.4	0.48	1.4 U	1.4	0.45	1.2 U	1.2	0.39	1.1 U	1.1	0.36
1,1-Dichloroethane	710	1.2 U	1.2	0.24	1.4 U	1.4	0.29	1.4 U	1.4	0.27	1.2 U	1.2	0.24	1.1 U	1.1	0.21
trans-1,2-Dichloroethene	19,000	1.2 U	1.2	0.31	1.4 U	1.4	0.38	1.4 U	1.4	0.36	1.2 U	1.2	0.31	1.1 U	1.1	0.28
cis-1,2-Dichloroethene	2,600	1.2 U	1.2	0.28	1.4 U	1.4	0.34	1.4 U	1.4	0.32	1.2 U	1.2	0.28	**0.6** J1	1.1	0.25
Chloroform	200	1.2 U	1.2	0.27	1.4 U	1.4	0.33	1.4 U	1.4	0.32	1.2 U	1.2	0.27	1.1 U	1.1	0.25
1,2-Dichloroethane	70	1.2 U	1.2	0.22	1.4 U	1.4	0.27	1.4 U	1.4	0.26	1.2 U	1.2	0.22	1.1 U	1.1	0.20
2-Butanone	430,000	**7.7**	5.8	0.60	7.2 U	7.2	0.73	6.8 U	6.8	0.69	5.8 U	5.8	0.60	**15**	5.3	0.54
1,1,1-Trichloroethane	1,900,000	1.2 U	1.2	0.26	1.4 U	1.4	0.32	1.4 U	1.4	0.31	1.2 U	1.2	0.26	1.1 U	1.1	0.24
Carbon Tetrachloride	21	1.2 U	1.2	0.25	1.4 U	1.4	0.30	1.4 U	1.4	0.29	1.2 U	1.2	0.25	1.1 U	1.1	0.23
Vinyl Acetate	---	5.8 U	5.8	0.45	7.2 U	7.2	0.54	6.8 U	6.8	0.51	5.8 U	5.8	0.44	5.3 U	5.3	0.40
Bromodichloromethane	89	1.2 U	1.2	0.30	1.4 U	1.4	0.36	1.4 U	1.4	0.34	1.2 U	1.2	0.30	1.1 U	1.1	0.27
1,2-Dichloropropane	92	1.2 U	1.2	0.19	1.4 U	1.4	0.23	1.4 U	1.4	0.22	1.2 U	1.2	0.19	1.1 U	1.1	0.17
cis-1,3-Dichloropropene	---	1.2 U	1.2	0.26	1.4 U	1.4	0.32	1.4 U	1.4	0.31	1.2 U	1.2	0.26	1.1 U	1.1	0.24
Trichloroethene	51	1.2 U	1.2	0.25	1.4 U	1.4	0.30	1.4 U	1.4	0.29	1.2 U	1.2	0.25	1.1 U	1.1	0.22
Dibromochloromethane	---	1.2 U	1.2	0.31	1.4 U	1.4	0.38	1.4 U	1.4	0.36	1.2 U	1.2	0.31	1.1 U	1.1	0.28
1,1,2-Trichloroethane	73	1.2 U	1.2	0.33	1.4 U	1.4	0.41	1.4 U	1.4	0.39	1.2 U	1.2	0.33	1.1 U	1.1	0.30
Benzene	93	**0.8** J1	1.2	0.35	**1.2** J1	1.4	0.42	**0.8** J1	1.4	0.40	1.2 U	1.2	0.34	**1.8**	1.1	0.31
trans-1,3-Dichloropropene	---	1.2 U	1.2	0.25	1.4 U	1.4	0.31	1.4 U	1.4	0.29	1.2 U	1.2	0.25	1.1 U	1.1	0.23
2-Chloroethylvinylether	---	5.8 U	5.8	0.32	7.2 U	7.2	0.39	6.8 U	6.8	0.37	5.8 U	5.8	0.32	5.3 U	5.3	0.29
Bromoform	---	1.2 U	1.2	0.35	1.4 U	1.4	0.42	1.4 U	1.4	0.40	1.2 U	1.2	0.35	1.1 U	1.1	0.31
4-Methyl-2-Pentanone (MIBK)	170,000	5.8 U	5.8	0.49	7.2 U	7.2	0.60	6.8 U	6.8	0.57	5.8 U	5.8	0.49	5.3 U	5.3	0.44
2-Hexanone	32,000	5.8 U	5.8	0.51	7.2 U	7.2	0.63	6.8 U	6.8	0.59	5.8 U	5.8	0.51	5.3 U	5.3	0.46
Tetrachloroethene	260	1.2 U	1.2	0.30	1.4 U	1.4	0.37	1.4 U	1.4	0.35	1.2 U	1.2	0.30	1.1 U	1.1	0.27
1,1,2,2-Tetrachloroethane	13	1.2 U	1.2	0.30	1.4 U	1.4	0.36	1.4 U	1.4	0.34	1.2 U	1.2	0.29	1.1 U	1.1	0.27
Toluene	100,000	**0.8** J1	1.2	0.18	1.4 U	1.4	0.22	1.4 U	1.4	0.20	1.2 U	1.2	0.18	**1.0** J1	1.1	0.16
Chlorobenzene	26,000	1.2 U	1.2	0.26	1.4 U	1.4	0.31	1.4 U	1.4	0.30	1.2 U	1.2	0.26	1.1 U	1.1	0.23
Ethylbenzene	230	1.2 U	1.2	0.24	1.4 U	1.4	0.29	1.4 U	1.4	0.27	1.2 U	1.2	0.24	1.1 U	1.1	0.21
Styrene	16,000,000	1.2 U	1.2	0.16	1.4 U	1.4	0.20	1.4 U	1.4	0.19	1.2 U	1.2	0.16	1.1 U	1.1	0.15
Trichlorofluoromethane	200,000	1.2 U	1.2	0.31	1.4 U	1.4	0.38	1.4 U	1.4	0.36	1.2 U	1.2	0.31	1.1 U	1.1	0.28
1,1,2-Trichloro-1,2,2-trifuoroethane	1,000,000,000	2.3 U	2.3	0.34	2.9 U	2.9	0.41	2.7 U	2.7	0.39	2.3 U	2.3	0.33	2.1 U	2.1	0.30
m,p-Xylene	160,000	1.2 U	1.2	0.46	1.4 U	1.4	0.56	1.4 U	1.4	0.53	1.2 U	1.2	0.46	**0.6** J1	1.1	0.41
o-Xylene	200,000	1.2 U	1.2	0.26	1.4 U	1.4	0.32	1.4 U	1.4	0.30	1.2 U	1.2	0.26	1.1 U	1.1	0.24
1,2-Dichlorobenzene	68,000	1.2 U	1.2	0.34	1.4 U	1.4	0.42	1.4 U	1.4	0.40	1.2 U	1.2	0.34	1.1 U	1.1	0.31
1,3-Dichlorobenzene	3,840	1.2 U	1.2	0.27	1.4 U	1.4	0.32	1.4 U	1.4	0.31	1.2 U	1.2	0.26	1.1 U	1.1	0.24
1,4-Dichlorobenzene	3,500	1.2 U	1.2	0.27	1.4 U	1.4	0.33	1.4 U	1.4	0.31	1.2 U	1.2	0.27	1.1 U	1.1	0.25
Acrolein	---	58 U	58	4.5	72 UJ	72	5.4	68 U	68	5.1	58 U	58	4.4	53 U	53	4.0
Methyl Iodide	---	1.2 U	1.2	0.25	1.4 U	1.4	0.31	1.4 U	1.4	0.29	1.2 U	1.2	0.25	1.1 U	1.1	0.23
Bromoethane	---	2.3 U	2.3	0.51	2.9 U	2.9	0.63	2.7 U	2.7	0.59	2.3 U	2.3	0.51	2.1 U	2.1	0.47
Acrylonitrile	---	5.8 U	5.8	1.2	7.2 U	7.2	1.5	6.8 U	6.8	1.4	5.8 U	5.8	1.2	5.3 U	5.3	1.1
1,1-Dichloropropene	---	1.2 U	1.2	0.36	1.4 U	1.4	0.45	1.4 U	1.4	0.42	1.2 U	1.2	0.36	1.1 U	1.1	0.33
Dibromomethane	---	1.2 U	1.2	0.17	1.4 U	1.4	0.21	1.4 U	1.4	0.20	1.2 U	1.2	0.17	1.1 U	1.1	0.16
1,1,1,2-Tetrachloroethane	---	1.2 U	1.2	0.27	1.4 U	1.4	0.33	1.4 U	1.4	0.31	1.2 U	1.2	0.27	1.1 U	1.1	0.25
1,2-Dibromo-3-chloropropane	---	5.8 U	5.8	0.68	7.2 U	7.2	0.84	6.8 U	6.8	0.79	5.8 U	5.8	0.68	5.3 U	5.3	0.62
1,2,3-Trichloropropane	---	2.3 U	2.3	0.60	2.9 U	2.9	0.74	2.7 U	2.7	0.70	2.3 U	2.3	0.60	2.1 U	2.1	0.55
trans-1,4-Dichloro-2-butene	---	5.8 U	5.8	0.51	7.2 U	7.2	0.62	6.8 U	6.8	0.59	5.8 U	5.8	0.51	5.3 U	5.3	0.46
1,3,5-Trimethylbenzene	800,000	1.2 U	1.2	0.30	1.4 U	1.4	0.36	1.4 U	1.4	0.34	1.2 U	1.2	0.30	1.1 U	1.1	0.27
1,2,4-Trimethylbenzene	800,000	**0.6** J1	1.2	0.27	1.4 U	1.4	0.33	1.4 U	1.4	0.31	1.2 U	1.2	0.27	**0.6** J1	1.1	0.24
Hexachlorobutadiene	---	5.8 U	5.8	0.48	7.2 U	7.2	0.59	6.8 U	6.8	0.55	5.8 U	5.8	0.48	5.3 U	5.3	0.43
Ethylene Dibromide	---	1.2 U	1.2	0.21	1.4 U	1.4	0.25	1.4 U	1.4	0.24	1.2 U	1.2	0.21	1.1 U	1.1	0.19
Bromochloromethane	---	1.2 U	1.2	0.38	1.4 U	1.4	0.46	1.4 U	1.4	0.44	1.2 U	1.2	0.38	1.1 U	1.1	0.34

TABLE M-2
DIRECT-PUSH SOIL BORINGS SOIL ANALYTICAL RESULTS
BOEING ISAACSON-THOMPSON
REMEDIAL INVESTIGATION

	Preliminary Cleanup Level	IT-SB-4(2-3.5) TU90E 11/01/2011			IT-SB-4(5-6.5) TU90R 11/01/2011			IT-SB-4(8-9) TU90F 11/01/2011			IT-SB-4(11.5-13) TU90G 11/01/2011			IT-SB-5(2-3.5) TU65L 10/31/2011		
		Result	Reporting Limit	Detection Limit	Result	Reporting Limit	Detection Limit	Result	Reporting Limit	Detection Limit	Result	Reporting Limit	Detection Limit	Result	Reporting Limit	Detection Limit
2,2-Dichloropropane	---	1.2 U	1.2	0.34	1.4 U	1.4	0.42	1.4 U	1.4	0.39	1.2 U	1.2	0.34	1.1 U	1.1	0.31
1,3-Dichloropropane	---	1.2 U	1.2	0.24	1.4 U	1.4	0.30	1.4 U	1.4	0.28	1.2 U	1.2	0.24	1.1 U	1.1	0.22
Isopropylbenzene	78,000	1.2 U	1.2	0.27	1.4 U	1.4	0.33	1.4 U	1.4	0.31	1.2 U	1.2	0.27	1.1 U	1.1	0.25
n-Propylbenzene	11,000	1.2 U	1.2	0.32	1.4 U	1.4	0.39	1.4 U	1.4	0.37	1.2 U	1.2	0.32	1.1 U	1.1	0.29
Bromobenzene	---	1.2 U	1.2	0.18	1.4 U	1.4	0.22	1.4 U	1.4	0.21	1.2 U	1.2	0.18	1.1 U	1.1	0.16
2-Chlorotoluene	---	1.2 U	1.2	0.35	1.4 U	1.4	0.43	1.4 U	1.4	0.41	1.2 U	1.2	0.35	1.1 U	1.1	0.32
4-Chlorotoluene	400,000	1.2 U	1.2	0.32	1.4 U	1.4	0.40	1.4 U	1.4	0.37	1.2 U	1.2	0.32	1.1 U	1.1	0.29
tert-Butylbenzene	---	1.2 U	1.2	0.36	1.4 U	1.4	0.44	1.4 U	1.4	0.41	1.2 U	1.2	0.36	1.1 U	1.1	0.32
sec-Butylbenzene	---	1.2 U	1.2	0.28	1.4 U	1.4	0.34	1.4 U	1.4	0.32	1.2 U	1.2	0.28	1.1 U	1.1	0.25
4-Isopropyltoluene	---	1.2 U	1.2	0.28	1.4 U	1.4	0.34	1.4 U	1.4	0.32	1.2 U	1.2	0.28	1.1 U	1.1	0.25
n-Butylbenzene	27,000	1.2 U	1.2	0.31	1.4 U	1.4	0.37	1.4 U	1.4	0.35	1.2 U	1.2	0.31	1.1 U	1.1	0.28
1,2,4-Trichlorobenzene	80	5.8 U	5.8	0.39	7.2 U	7.2	0.47	6.8 U	6.8	0.45	5.8 U	5.8	0.39	5.3 U	5.3	0.35
Naphthalene	2,100	5.8 U	5.8	0.50	7.2 U	7.2	0.61	6.8 U	6.8	0.58	5.8 U	5.8	0.50	**1.8** J1	5.3	0.45
1,2,3-Trichlorobenzene	---	5.8 U	5.8	0.36	7.2 U	7.2	0.44	6.8 U	6.8	0.41	5.8 U	5.8	0.36	5.3 U	5.3	0.32
SEMIVOLATILES (µg/kg)																
Method SW8270D																
Phenol	1,900,000	19 U	19	8.0	19 U	19	8.2	19 U	19	8.1	18 U	18	7.9	19 U	19	8.3
Bis-(2-Chloroethyl) Ether	---	19 U	19	3.1	19 U	19	3.2	19 U	19	3.1	18 U	18	3.1	19 U	19	3.2
2-Chlorophenol	---	19 U	19	2.2	19 U	19	2.3	19 U	19	2.2	18 U	18	2.2	19 U	19	2.3
1,3-Dichlorobenzene	3,840	19 U	19	2.4	19 U	19	2.5	19 U	19	2.5	18 U	18	2.4	19 U	19	2.5
1,4-Dichlorobenzene	3,500	19 U	19	2.7	19 U	19	2.7	19 U	19	2.7	18 U	18	2.6	19 U	19	2.8
Benzyl Alcohol	8,000,000	19 U	19	5.6	19 U	19	5.7	19 U	19	5.7	18 U	18	5.6	19 U	19	5.9
1,2-Dichlorobenzene	68,000	19 U	19	2.3	19 U	19	2.4	19 U	19	2.3	18 U	18	2.3	19 U	19	2.4
2-Methylphenol	250,000	19 U	19	4.9	19 U	19	5.0	19 U	19	4.9	18 U	18	4.8	19 U	19	5.1
2,2'-Oxybis(1-Chloropropane)	---	19 U	19	3.5	19 U	19	3.5	19 U	19	3.5	18 U	18	3.5	19 U	19	3.6
4-Methylphenol	41,000	37 U	37	6.2	38 U	38	6.3	38 U	38	6.2	37 U	37	6.1	39 U	39	6.4
N-Nitroso-Di-N-Propylamine	---	19 U	19	3.1	19 U	19	3.2	19 U	19	3.2	18 U	18	3.1	19 U	19	3.2
Hexachloroethane	---	19 U	19	2.7	19 U	19	2.8	19 U	19	2.8	18 U	18	2.7	19 U	19	2.8
Nitrobenzene	---	19 U	19	3.8	19 U	19	3.8	19 U	19	3.8	18 U	18	3.7	19 U	19	3.9
Isophorone	---	19 U	19	2.7	19 U	19	2.7	19 U	19	2.7	18 U	18	2.6	19 U	19	2.8
2-Nitrophenol	---	93 U	93	36	94 U	94	37	94 U	94	36	92 U	92	36	96 U	96	37
2,4-Dimethylphenol	95,000	37 UJ	37	3.2	38 UJ	38	3.3	38 UJ	38	3.2	37 UJ	37	3.2	39 U	39	3.3
Benzoic Acid	9,000	370 UJ	370	94	380 UJ	380	95	380 UJ	380	95	370 UJ	370	93	390 U	390	97
bis(2-Chloroethoxy) Methane	---	19 U	19	1.9	19 U	19	1.9	19 U	19	1.9	18 U	18	1.8	19 U	19	1.9
2,4-Dichlorophenol	---	190 U	190	20	190 U	190	20	190 U	190	20	180 U	180	20	190 U	190	21
1,2,4-Trichlorobenzene	80	19 U	19	3.2	19 U	19	3.3	19 U	19	3.3	18 U	18	3.2	19 U	19	3.4
Naphthalene	2,100	**110**	19	2.6	**20**	19	2.6	19 U	19	2.6	18 U	18	2.5	**62**	19	2.7
4-Chloroaniline	---	250 U	250	21	260 U	260	21	250 U	250	21	250 U	250	20	260 U	260	22
Hexachlorobutadiene	---	93 U	93	4.2	94 U	94	4.3	94 U	94	4.3	92 U	92	4.2	96 U	96	4.4
4-Chloro-3-methylphenol	740,000	93 U	93	14	94 U	94	14	94 U	94	14	92 U	92	14	96 U	96	15
2-Methylnaphthalene	320,000	**190**	19	2.8	**23**	19	2.9	19 U	19	2.9	18 U	18	2.8	**32**	19	3.0
Hexachlorocyclopentadiene	---	370 UJ	370	62	380 UJ	380	63	380 UJ	380	62	370 UJ	370	61	390 UJ	390	64
2,4,6-Trichlorophenol	---	93 U	93	21	94 U	94	21	94 U	94	21	92 U	92	21	96 U	96	22
2,4,5-Trichlorophenol	---	93 U	93	20	94 U	94	20	94 U	94	20	92 U	92	20	96 U	96	21
2-Chloronaphthalene	---	19 U	19	2.4	19 U	19	2.5	19 U	19	2.5	18 U	18	2.4	19 U	19	2.5
2-Nitroaniline	---	93 U	93	17	94 U	94	17	94 U	94	17	92 U	92	17	96 U	96	18
Dimethylphthalate	71	19 U	19	2.7	19 U	19	2.7	19 U	19	2.7	18 U	18	2.7	19 U	19	2.8
Acenaphthylene	---	19 U	19	5.3	19 U	19	5.4	19 U	19	5.4	18 U	18	5.2	19 U	19	5.5
3-Nitroaniline	---	93 U	93	21	94 U	94	21	94 U	94	21	92 U	92	21	96 U	96	22
Acenaphthene	230,000	19 U	19	3.0	19 U	19	3.1	19 U	19	3.1	18 U	18	3.0	**27**	19	3.2
2,4-Dinitrophenol	---	790 U	790	100	800 U	800	100	800 U	800	100	780 U	780	100	820 U	820	110
4-Nitrophenol	---	93 U	93	32	94 U	94	33	94 U	94	33	92 U	92	32	96 UJ	96	33
Dibenzofuran	80,000	**36**	19	3.8	19 U	19	3.9	19 U	19	3.8	18 U	18	3.8	**18** J1	19	4.0
2,6-Dinitrotoluene	---	93 U	93	28	94 U	94	29	94 U	94	29	92 U	92	28	96 U	96	30
2,4-Dinitrotoluene	---	93 U	93	18	94 U	94	18	94 U	94	18	92 U	92	18	96 U	96	19
Diethylphthalate	178,000	46 U	46	34	47 U	47	35	47 U	47	34	46 U	46	34	48 U	48	35
4-Chlorophenyl-phenylether	---	19 U	19	4.9	19 U	19	5.0	19 U	19	5.0	18 U	18	4.9	19 U	19	5.1
Fluorene	150,000	19 U	19	4.0	19 U	19	4.1	19 U	19	4.1	18 U	18	4.0	**33**	19	4.2
4-Nitroaniline	---	93 UJ	93	35	94 U	94	36	94 UJ	94	36	92 UJ	92	35	96 U	96	37

TABLE M-2
DIRECT-PUSH SOIL BORINGS SOIL ANALYTICAL RESULTS
BOEING ISAACSON-THOMPSON
REMEDIAL INVESTIGATION

	Preliminary Cleanup Level	IT-SB-4(2-3.5) TU90E 11/01/2011			IT-SB-4(5-6.5) TU90R 11/01/2011			IT-SB-4(8-9) TU90F 11/01/2011			IT-SB-4(11.5-13) TU90G 11/01/2011			IT-SB-5(2-3.5) TU65L 10/31/2011		
		Result	Reporting Limit	Detection Limit	Result	Reporting Limit	Detection Limit	Result	Reporting Limit	Detection Limit	Result	Reporting Limit	Detection Limit	Result	Reporting Limit	Detection Limit
4,6-Dinitro-2-Methylphenol	---	190 U	190	20	190 U	190	20	190 U	190	20	180 U	180	19	190 U	190	20
N-Nitrosodiphenylamine	204,000	19 U	19	5.0	19 U	19	5.1	19 U	19	5.1	18 U	18	4.9	19 U	19	5.2
4-Bromophenyl-phenylether	---	19 U	19	4.7	19 U	19	4.7	19 U	19	4.7	18 U	18	4.6	19 U	19	4.9
Hexachlorobenzene	---	19 U	19	4.0	19 U	19	4.0	19 U	19	4.0	18 U	18	3.9	19 U	19	4.1
Pentachlorophenol	---	190 U	190	45	190 U	190	46	190 U	190	46	180 U	180	45	190 UJ	190	47
Phenanthrene	---	**89**	19	3.4	**27**	19	3.4	19 U	19	3.4	18 U	18	3.3	**250**	19	3.5
Carbazole	50,000	**11** J, J1	19	2.5	19 U	19	2.5	19 UJ	19	2.5	18 UJ	18	2.5	**33**	19	2.6
Anthracene	1,600,000	**15** J1	19	4.2	19 U	19	4.2	19 U	19	4.2	18 U	18	4.1	**45**	19	4.3
Di-n-Butylphthalate	26,000	**150**	19	7.6	19 U	19	7.7	19 U	19	7.7	18 U	18	7.5	19 U	19	7.9
Fluoranthene	230,000	**62**	19	2.7	**23**	19	2.7	19 U	19	2.7	18 U	18	2.7	**220**	19	2.8
Pyrene	240,000	**69**	19	1.8	**26**	19	1.8	19 U	19	1.8	18 U	18	1.8	**240**	19	1.9
Butylbenzylphthalate	1,700	19 U	19	5.7	19 U	19	5.8	19 U	19	5.8	18 U	18	5.6	19 U	19	5.9
3,3'-Dichlorobenzidine	---	140 UJ	140	17	140 UJ	140	17	140 UJ	140	17	140 UJ	140	16	140 UJ	140	17
Benzo(a)anthracene	---	**41**	19	3.1	19 U	19	3.1	19 U	19	3.1	18 U	18	3.0	**93**	19	3.2
bis(2-Ethylhexyl)phthalate	56,600	58 U	23	14	45 U	24	14	24 U	24	14	23 U	23	13	17 UJ2	24	14
Chrysene	---	**68**	19	3.5	**24**	19	3.5	19 U	19	3.5	18 U	18	3.4	**140**	19	3.6
Di-n-Octyl phthalate	---	19 U	19	5.4	19 U	19	5.5	19 U	19	5.5	18 U	18	5.4	19 U	19	5.6
Benzo(a)pyrene	---	**41**	19	5.1	**14** J1	19	5.1	19 U	19	5.1	18 U	18	5.0	**140**	19	5.3
Indeno(1,2,3-cd)pyrene	---	**32**	19	4.3	19 U	19	4.4	19 U	19	4.4	18 U	18	4.3	**88**	19	4.5
Dibenz(a,h)anthracene	---	**14** J1	19	4.0	19 U	19	4.1	19 U	19	4.0	18 U	18	4.0	**49**	19	4.2
Benzo(g,h,i)perylene	---	**44**	19	4.1	**16** J1	19	4.2	19 U	19	4.1	18 U	18	4.0	**130**	19	4.2
1-Methylnaphthalene	16,000	**130**	19	2.5	**14** J1	19	2.5	19 U	19	2.5	18 U	18	2.5	**22**	19	2.6
Total Benzofluoranthenes	---	**99**	19	2.6	**24**	19	2.6	19 U	19	2.6	18 U	18	2.5	**200**	19	2.7
cPAH TEQ	15	**60** J	NA	NA	**17** J	NA	NA	ND	NA	NA	ND	NA	NA	**184**	NA	NA
PAHs (µg/kg)																
Method SW8270D-SIM																
Naphthalene	2,100	**100**	8.0	4.2	**14**	4.6	2.4	4.4 U	4.4	2.3	4.7 U	4.7	2.5	**42**	8.2	4.3
2-Methylnaphthalene	320,000	**170**	8.0	2.4	**11**	4.6	1.4	**2.3** J1	4.4	1.3	4.7 U	4.7	1.4	**27**	8.2	2.5
1-Methylnaphthalene	16,000	**140**	8.0	2.7	**12**	4.6	1.6	**2.4** J1	4.4	1.5	4.7 U	4.7	1.6	**22**	8.2	2.8
Total Naphthalenes	---	**410**	NA	NA	**37**	NA	NA	**4.7** J1	NA	NA	4.7 U	NA	NA	**91**	NA	NA
Acenaphthylene	---	**9.0**	8.0	2.0	4.6 U	4.6	1.2	4.4 U	4.4	1.1	4.7 U	4.7	1.2	**6.3** J1	8.2	2.1
Acenaphthene	230,000	8.0 U	8.0	2.1	4.6 U	4.6	1.2	4.4 U	4.4	1.2	4.7 U	4.7	1.2	**45**	8.2	2.2
Fluorene	150,000	8.0 U	8.0	2.1	**2.7** J1	4.6	1.2	4.4 U	4.4	1.1	4.7 U	4.7	1.2	**41**	8.2	2.1
Phenanthrene	---	**78**	8.0	3.2	**33**	4.6	1.8	**3.8** J1	4.4	1.7	**5.9**	4.7	1.9	**300**	8.2	3.2
Anthracene	1,600,000	**19**	8.0	2.3	**6.1**	4.6	1.4	4.4 U	4.4	1.3	4.7 U	4.7	1.4	**62**	8.2	2.4
Fluoranthene	230,000	**58**	8.0	2.8	**29**	4.6	1.6	4.4 U	4.4	1.5	**3.5** J1	4.7	1.7	**340**	8.2	2.9
Pyrene	240,000	**62**	8.0	3.5	**26**	4.6	2.1	4.4 U	4.4	1.9	**3.0** J1	4.7	2.1	**320**	8.2	3.6
Benzo(a)anthracene	---	**35**	8.0	2.6	**11**	4.6	1.5	4.4 U	4.4	1.4	**2.6** J1	4.7	1.5	**150**	8.2	2.6
Chrysene	---	**56**	8.0	3.0	**22**	4.6	1.7	4.4 U	4.4	1.6	4.7 U	4.7	1.8	**170**	8.2	3.1
Benzo(a)pyrene	---	**55**	8.0	2.8	**19**	4.6	1.6	4.4 U	4.4	1.5	4.7 U	4.7	1.6	**110**	8.2	2.9
Indeno(1,2,3-cd)pyrene	---	**32**	8.0	5.5	**11**	4.6	3.2	4.4 U	4.4	3.0	4.7 U	4.7	3.2	**94**	8.2	5.7
Dibenz(a,h)anthracene	---	**16**	8.0	3.8	4.6 U	4.6	2.2	4.4 U	4.4	2.1	4.7 U	4.7	2.2	**32**	8.2	3.9
Benzo(g,h,i)perylene	---	**43**	8.0	4.9	**13**	4.6	2.8	4.4 U	4.4	2.7	4.7 U	4.7	2.9	**110**	8.2	5.0
Dibenzofuran	80,000	**40**	8.0	2.4	**5.9**	4.6	1.4	4.4 U	4.4	1.3	4.7 U	4.7	1.4	**24**	8.2	2.5
Total Benzofluoranthenes	---	**110**	8.0	3.0	**34**	4.6	1.7	4.4 U	4.4	1.6	4.7 U	4.7	1.7	**250**	8.2	3.0
cPAH TEQ	15	**75**	NA	NA	**25**	NA	NA	ND	NA	NA	**0.3** J	NA	NA	**164**	NA	NA

TABLE M-2
DIRECT-PUSH SOIL BORINGS SOIL ANALYTICAL RESULTS
BOEING ISAACSON-THOMPSON
REMEDIAL INVESTIGATION

	Preliminary Cleanup Level	IT-SB-4(2-3.5) TU90E 11/01/2011			IT-SB-4(5-6.5) TU90R 11/01/2011			IT-SB-4(8-9) TU90F 11/01/2011			IT-SB-4(11.5-13) TU90G 11/01/2011			IT-SB-5(2-3.5) TU65L 10/31/2011		
		Result	Reporting Limit	Detection Limit	Result	Reporting Limit	Detection Limit	Result	Reporting Limit	Detection Limit	Result	Reporting Limit	Detection Limit	Result	Reporting Limit	Detection Limit
PCBs (µg/kg)																
Method SW8082																
Aroclor 1016	0.72	160 U	160	9.5	32 U	32	1.9	30 U	30	1.8	31 U	31	1.9	31 U	31	1.9
Aroclor 1242	0.72	160 U	160	12	32 U	32	2.3	30 U	30	2.2	31 U	31	2.3	31 U	31	2.3
Aroclor 1248	220	310 U	310	12	32 U	32	2.3	30 U	30	2.2	31 U	31	2.3	31 U	31	2.3
Aroclor 1254	0.29	**990**	160	12	**49**	32	2.3	30 U	30	2.2	31 U	31	2.3	**31**	31	2.3
Aroclor 1260	5.4	**790**	160	12	32 U	32	2.3	30 U	30	2.2	31 U	31	2.3	**51**	31	2.3
Aroclor 1221	---	160 U	160	12	32 U	32	2.3	30 U	30	2.2	31 U	31	2.3	31 U	31	2.3
Aroclor 1232	---	160 U	160	12	32 U	32	2.3	30 U	30	2.2	31 U	31	2.3	31 U	31	2.3
Total PCBs	1.8	**1780**	NA	NA	**49**	NA	NA	ND	NA	NA	ND	NA	NA	**82**	NA	NA
TOTAL PETROLEUM HYDROCARBONS (mg/kg)																
NWTPH-Dx																
Diesel-Range Organics	2,000	**69**	5.6	1.4	**28**	6.2	1.6	5.6 U	5.6	1.4	6.5 U	6.5	1.7	**86**	5.3	1.4
Oil-Range Organics	2,000	**220**	11	1.8	**71**	12	1.9	11 U	11	1.8	13 U	13	2.0	**210**	11	1.7
NWTPH-G																
Gasoline-Range Organics	100/30	**12**	6.8	3.2	9.2 U	9.2	4.4	7.4 U	7.4	3.5	7.9 U	7.9	3.8	**26**	6.0	2.9
TOTAL METALS (mg/kg)																
Methods 200.8/7471A/SW7196A																
Antimony	5	0.2 U	0.2	0.014	0.2 U	0.2	0.016	0.2 U	0.2	0.015	0.3 U	0.3	0.017	0.2 U	0.2	0.015
Arsenic	7	**9.7**	0.2	0.092	**7.6**	0.2	0.11	**4.8**	0.2	0.10	**1.9**	0.3	0.12	**16.9**	0.2	0.097
Barium	640	**154**	0.5	0.059	**58.8**	0.6	0.069	**37.9**	0.6	0.066	**41.7**	0.7	0.074	**89.7**	0.6	0.063
Beryllium	160	**0.4**	0.2	0.019	0.2 U	0.2	0.022	0.2 U	0.2	0.021	0.3 U	0.3	0.024	**0.3**	0.2	0.020
Cadmium	1.3	**0.9**	0.1	0.013	**0.2**	0.1	0.015	0.1 U	0.1	0.014	0.1 U	0.1	0.016	**0.3**	0.1	0.013
Chromium	1,480	**58**	3	0.20	**16.4**	0.6	0.047	**11.8**	0.6	0.045	**13.3**	0.7	0.050	**16.9**	0.6	0.042
Chromium VI	3.8	0.454 U	0.454	0.030	0.499 U	0.499	0.030	0.478 U	0.478	0.030	0.599 U	0.599	0.030	0.464 U	0.464	0.030
Copper	36	**118**	0.5	0.038	**43.3**	0.6	0.044	**18.6**	0.6	0.042	**17.9**	0.7	0.048	**45.2**	0.6	0.040
Lead	250	**287**	0.1	0.050	**40.6**	0.1	0.058	**2.2**	0.1	0.055	**2.0**	0.1	0.062	**52.1**	0.1	0.053
Mercury	1.5	**0.08**	0.03	0.0013	**0.07**	0.02	0.0011	0.03 U	0.03	0.0013	0.03 U	0.03	0.0017	**2.66**	0.04	0.0021
Nickel	210	**52.7**	0.5	0.052	**12.3**	0.6	0.061	**9.7**	0.6	0.058	**8.9**	0.7	0.065	**18.6**	0.6	0.055
Selenium	1.0	0.5 U	0.5	0.11	0.6 U	0.6	0.12	0.6 U	0.6	0.12	0.7 U	0.7	0.13	0.6 U	0.6	0.11
Silver	170	**0.3**	0.2	0.0085	0.2 U	0.2	0.0099	0.2 U	0.2	0.0094	0.3 U	0.3	0.011	0.2 U	0.2	0.0089
Thallium	0.67	0.2 U	0.2	0.0032	0.2 U	0.2	0.0037	0.2 U	0.2	0.0035	0.3 U	0.3	0.0040	0.2 U	0.2	0.0034
Zinc	1,400	**780**	20	1.8	**77**	5	0.42	**30**	5	0.40	**27**	5	0.45	**76**	4	0.38

TABLE M-2
DIRECT-PUSH SOIL BORINGS SOIL ANALYTICAL RESULTS
BOEING ISAACSON-THOMPSON
REMEDIAL INVESTIGATION

	Preliminary Cleanup Level	IT-SB-5(5-6.5) TU65M 10/31/2011			IT-SB-5(8-9.5) TU65N 10/31/2011			IT-SB-5(16-17.5) TU65O 10/31/2011			IT-SB-6(2-3.5) TU90H 11/01/2011			IT-SB-6(5-6.5) TU90I 11/01/2011		
		Result	Reporting Limit	Detection Limit	Result	Reporting Limit	Detection Limit	Result	Reporting Limit	Detection Limit	Result	Reporting Limit	Detection Limit	Result	Reporting Limit	Detection Limit
VOLATILES (µg/kg)																
Method SW8260C																
Chloromethane	1,600	1.1 UJ	1.1	0.28	1.6 U	1.6	0.41	1.2 U	1.2	0.31	1.2 U	1.2	0.31	1.2 U	1.2	0.32
Bromomethane	---	1.1 UJ	1.1	0.20	1.6 U	1.6	0.29	1.2 U	1.2	0.22	1.2 UJ	1.2	0.22	1.2 UJ	1.2	0.23
Vinyl Chloride	7.4	1.1 UJ	1.1	0.25	1.6 U	1.6	0.36	1.2 U	1.2	0.28	1.2 U	1.2	0.28	1.2 U	1.2	0.29
Chloroethane	280,000	1.1 UJ	1.1	0.50	1.6 U	1.6	0.72	1.2 U	1.2	0.55	1.2 U	1.2	0.55	1.2 U	1.2	0.57
Methylene Chloride	2400	2.1 UJ	2.1	0.68	**3.4** J	3.1	0.99	**3.0** J	2.4	0.76	**2.7**	2.4	0.75	**3.0**	2.5	0.78
Acetone	510,000	5.4 UJ	5.4	0.52	**54**	7.8	0.75	17 U	5.9	0.57	**64** J	5.9	0.57	**60** J	6.2	0.59
Carbon Disulfide	75,000	**7.5** J	1.1	0.60	**2.4**	1.6	0.87	**5.4**	1.2	0.67	1.2 U	1.2	0.66	**1.3**	1.2	0.69
1,1-Dichloroethene	81	1.1 UJ	1.1	0.36	1.6 U	1.6	0.52	1.2 U	1.2	0.40	1.2 U	1.2	0.40	1.2 U	1.2	0.41
1,1-Dichloroethane	710	1.1 UJ	1.1	0.22	1.6 U	1.6	0.32	1.2 U	1.2	0.24	1.2 U	1.2	0.24	1.2 U	1.2	0.25
trans-1,2-Dichloroethene	19,000	1.1 UJ	1.1	0.29	1.6 U	1.6	0.41	1.2 U	1.2	0.32	1.2 U	1.2	0.32	1.2 U	1.2	0.33
cis-1,2-Dichloroethene	2,600	1.1 UJ	1.1	0.26	1.6 U	1.6	0.37	1.2 U	1.2	0.29	1.2 U	1.2	0.29	1.2 U	1.2	0.29
Chloroform	200	1.1 UJ	1.1	0.25	1.6 U	1.6	0.36	1.2 U	1.2	0.28	1.2 U	1.2	0.28	1.2 U	1.2	0.29
1,2-Dichloroethane	70	1.1 UJ	1.1	0.20	1.6 U	1.6	0.30	1.2 U	1.2	0.23	1.2 U	1.2	0.23	1.2 U	1.2	0.23
2-Butanone	430,000	5.4 UJ	5.4	0.55	7.8 U	7.8	0.80	5.9 U	5.9	0.61	**5.2** J1	5.9	0.61	**8.7**	6.2	0.63
1,1,1-Trichloroethane	1,900,000	1.1 UJ	1.1	0.24	1.6 U	1.6	0.35	1.2 U	1.2	0.27	1.2 U	1.2	0.27	1.2 U	1.2	0.28
Carbon Tetrachloride	21	1.1 UJ	1.1	0.23	1.6 U	1.6	0.33	1.2 U	1.2	0.25	1.2 U	1.2	0.25	1.2 U	1.2	0.26
Vinyl Acetate	---	5.4 UJ	5.4	0.41	7.8 U	7.8	0.59	5.9 U	5.9	0.45	5.9 U	5.9	0.45	6.2 U	6.2	0.47
Bromodichloromethane	89	1.1 UJ	1.1	0.27	1.6 U	1.6	0.39	1.2 U	1.2	0.30	1.2 U	1.2	0.30	1.2 U	1.2	0.31
1,2-Dichloropropane	92	1.1 UJ	1.1	0.17	1.6 U	1.6	0.25	1.2 U	1.2	0.19	1.2 U	1.2	0.19	1.2 U	1.2	0.20
cis-1,3-Dichloropropene	---	1.1 UJ	1.1	0.24	1.6 U	1.6	0.35	1.2 U	1.2	0.27	1.2 U	1.2	0.27	1.2 U	1.2	0.28
Trichloroethene	51	1.1 UJ	1.1	0.23	1.6 U	1.6	0.33	1.2 U	1.2	0.25	1.2 U	1.2	0.25	1.2 U	1.2	0.26
Dibromochloromethane	---	1.1 UJ	1.1	0.29	1.6 U	1.6	0.41	1.2 U	1.2	0.32	1.2 U	1.2	0.32	1.2 U	1.2	0.33
1,1,2-Trichloroethane	73	1.1 UJ	1.1	0.31	1.6 U	1.6	0.44	1.2 U	1.2	0.34	1.2 U	1.2	0.34	1.2 U	1.2	0.35
Benzene	93	1.1 UJ	1.1	0.32	**3.3**	1.6	0.46	1.2 U	1.2	0.35	**1.3**	1.2	0.35	**0.9** J1	1.2	0.36
trans-1,3-Dichloropropene	---	1.1 UJ	1.1	0.23	1.6 U	1.6	0.34	1.2 U	1.2	0.26	1.2 U	1.2	0.26	1.2 U	1.2	0.27
2-Chloroethylvinylether	---	5.4 UJ	5.4	0.30	7.8 U	7.8	0.43	5.9 U	5.9	0.33	5.9 U	5.9	0.33	6.2 U	6.2	0.34
Bromoform	---	1.1 UJ	1.1	0.32	1.6 U	1.6	0.46	1.2 U	1.2	0.35	1.2 U	1.2	0.35	1.2 U	1.2	0.36
4-Methyl-2-Pentanone (MIBK)	170,000	5.4 UJ	5.4	0.45	7.8 U	7.8	0.65	5.9 U	5.9	0.50	5.9 U	5.9	0.50	6.2 U	6.2	0.52
2-Hexanone	32,000	5.4 UJ	5.4	0.47	7.8 U	7.8	0.68	5.9 U	5.9	0.52	5.9 U	5.9	0.52	6.2 U	6.2	0.54
Tetrachloroethene	260	1.1 UJ	1.1	0.28	1.6 U	1.6	0.40	1.2 U	1.2	0.31	1.2 U	1.2	0.31	1.2 U	1.2	0.32
1,1,2,2-Tetrachloroethane	13	1.1 UJ	1.1	0.27	1.6 U	1.6	0.39	1.2 U	1.2	0.30	1.2 U	1.2	0.30	1.2 U	1.2	0.31
Toluene	100,000	**9.1** J	1.1	0.16	**14**	1.6	0.23	1.2 U	1.2	0.18	**1.3**	1.2	0.18	**4.8**	1.2	0.19
Chlorobenzene	26,000	1.1 UJ	1.1	0.23	1.6 U	1.6	0.34	1.2 U	1.2	0.26	1.2 U	1.2	0.26	1.2 U	1.2	0.27
Ethylbenzene	230	**21** J	1.1	0.22	**16**	1.6	0.31	1.2 U	1.2	0.24	1.2 U	1.2	0.24	1.2 U	1.2	0.25
Styrene	16,000,000	1.1 UJ	1.1	0.15	1.6 U	1.6	0.21	1.2 U	1.2	0.16	1.2 U	1.2	0.16	1.2 U	1.2	0.17
Trichlorofluoromethane	200,000	1.1 UJ	1.1	0.29	1.6 U	1.6	0.41	1.2 U	1.2	0.32	1.2 U	1.2	0.32	1.2 U	1.2	0.33
1,1,2-Trichloro-1,2,2-trifuoroethane	1,000,000,000	2.1 UJ	2.1	0.31	3.1 U	3.1	0.45	2.4 U	2.4	0.34	2.4 U	2.4	0.34	2.5 U	2.5	0.35
m,p-Xylene	160,000	**240** J	1.1	0.42	**77**	1.6	0.61	**0.9** J1	1.2	0.47	1.2 U	1.2	0.47	**0.8** J1	1.2	0.48
o-Xylene	200,000	**37** J	1.1	0.24	**14**	1.6	0.35	1.2 U	1.2	0.27	1.2 U	1.2	0.27	1.2 U	1.2	0.28
1,2-Dichlorobenzene	68,000	1.1 UJ	1.1	0.31	1.6 U	1.6	0.45	1.2 U	1.2	0.35	1.2 U	1.2	0.35	1.2 U	1.2	0.36
1,3-Dichlorobenzene	3,840	1.1 UJ	1.1	0.24	1.6 U	1.6	0.35	1.2 U	1.2	0.27	1.2 U	1.2	0.27	1.2 U	1.2	0.28
1,4-Dichlorobenzene	3,500	1.1 UJ	1.1	0.25	**2.5**	1.6	0.36	1.2 U	1.2	0.28	1.2 U	1.2	0.28	1.2 U	1.2	0.29
Acrolein	---	54 UJ	54	4.1	78 U	78	5.9	59 U	59	4.5	59 U	59	4.5	62 U	62	4.7
Methyl Iodide	---	1.1 UJ	1.1	0.23	1.6 U	1.6	0.33	1.2 U	1.2	0.26	1.2 U	1.2	0.26	1.2 U	1.2	0.26
Bromoethane	---	2.1 UJ	2.1	0.47	3.1 U	3.1	0.68	2.4 U	2.4	0.52	2.4 U	2.4	0.52	2.5 U	2.5	0.54
Acrylonitrile	---	5.4 UJ	5.4	1.1	7.8 U	7.8	1.6	5.9 U	5.9	1.2	5.9 U	5.9	1.2	6.2 U	6.2	1.3
1,1-Dichloropropene	---	1.1 UJ	1.1	0.33	1.6 U	1.6	0.48	1.2 U	1.2	0.37	1.2 U	1.2	0.37	1.2 U	1.2	0.38
Dibromomethane	---	1.1 UJ	1.1	0.16	1.6 U	1.6	0.23	1.2 U	1.2	0.18	1.2 U	1.2	0.17	1.2 U	1.2	0.18
1,1,1,2-Tetrachloroethane	---	1.1 UJ	1.1	0.25	1.6 U	1.6	0.36	1.2 U	1.2	0.28	1.2 U	1.2	0.28	1.2 U	1.2	0.29
1,2-Dibromo-3-chloropropane	---	5.4 UJ	5.4	0.63	7.8 U	7.8	0.91	5.9 U	5.9	0.7	5.9 U	5.9	0.70	6.2 U	6.2	0.72
1,2,3-Trichloropropane	---	2.1 UJ	2.1	0.55	3.1 U	3.1	0.80	2.4 U	2.4	0.62	2.4 U	2.4	0.61	2.5 U	2.5	0.64
trans-1,4-Dichloro-2-butene	---	5.4 UJ	5.4	0.47	7.8 U	7.8	0.68	5.9 U	5.9	0.52	5.9 U	5.9	0.52	6.2 U	6.2	0.54
1,3,5-Trimethylbenzene	800,000	1.1 UJ	1.1	0.27	1.6 U	1.6	0.39	1.2 U	1.2	0.30	1.2 U	1.2	0.30	1.2 U	1.2	0.31
1,2,4-Trimethylbenzene	800,000	**30** J	1.1	0.25	**8.6**	1.6	0.36	1.2 U	1.2	0.27	1.2 U	1.2	0.27	1.2 U	1.2	0.28
Hexachlorobutadiene	---	5.4 UJ	5.4	0.44	7.8 U	7.8	0.64	5.9 U	5.9	0.49	5.9 U	5.9	0.49	6.2 U	6.2	0.50
Ethylene Dibromide	---	1.1 UJ	1.1	0.19	1.6 U	1.6	0.27	1.2 U	1.2	0.21	1.2 U	1.2	0.21	1.2 U	1.2	0.22
Bromochloromethane	---	1.1 UJ	1.1	0.35	1.6 U	1.6	0.50	1.2 U	1.2	0.38	1.2 U	1.2	0.38	1.2 U	1.2	0.40

TABLE M-2
DIRECT-PUSH SOIL BORINGS SOIL ANALYTICAL RESULTS
BOEING ISAACSON-THOMPSON
REMEDIAL INVESTIGATION

	Preliminary Cleanup Level	IT-SB-5(5-6.5) TU65M 10/31/2011			IT-SB-5(8-9.5) TU65N 10/31/2011			IT-SB-5(16-17.5) TU65O 10/31/2011			IT-SB-6(2-3.5) TU90H 11/01/2011			IT-SB-6(5-6.5) TU90I 11/01/2011		
		Result	Reporting Limit	Detection Limit	Result	Reporting Limit	Detection Limit	Result	Reporting Limit	Detection Limit	Result	Reporting Limit	Detection Limit	Result	Reporting Limit	Detection Limit
2,2-Dichloropropane	---	1.1 UJ	1.1	0.31	1.6 U	1.6	0.45	1.2 U	1.2	0.35	1.2 U	1.2	0.35	1.2 U	1.2	0.36
1,3-Dichloropropane	---	1.1 UJ	1.1	0.22	1.6 U	1.6	0.32	1.2 U	1.2	0.25	1.2 U	1.2	0.25	1.2 U	1.2	0.26
Isopropylbenzene	78,000	**3.6** J	1.1	0.25	**0.9** J1	1.6	0.36	1.2 U	1.2	0.28	1.2 U	1.2	0.28	1.2 U	1.2	0.29
n-Propylbenzene	11,000	**3.3** J	1.1	0.29	**1.2** J1	1.6	0.42	1.2 U	1.2	0.32	1.2 U	1.2	0.32	1.2 U	1.2	0.33
Bromobenzene	---	1.1 UJ	1.1	0.16	1.6 U	1.6	0.24	1.2 U	1.2	0.18	1.2 U	1.2	0.18	1.2 U	1.2	0.19
2-Chlorotoluene	---	1.1 UJ	1.1	0.32	1.6 U	1.6	0.47	1.2 U	1.2	0.36	1.2 U	1.2	0.36	1.2 U	1.2	0.37
4-Chlorotoluene	400,000	1.1 UJ	1.1	0.30	1.6 U	1.6	0.43	1.2 U	1.2	0.33	1.2 U	1.2	0.33	1.2 U	1.2	0.34
tert-Butylbenzene	---	**6.9** J	1.1	0.33	**2.5**	1.6	0.48	1.2 U	1.2	0.36	1.2 U	1.2	0.36	1.2 U	1.2	0.38
sec-Butylbenzene	---	1.1 UJ	1.1	0.26	**1.6**	1.6	0.37	1.2 U	1.2	0.29	1.2 U	1.2	0.29	1.2 U	1.2	0.29
4-Isopropyltoluene	---	**2.3** J	1.1	0.25	**3.9**	1.6	0.37	1.2 U	1.2	0.28	1.2 U	1.2	0.28	1.2 U	1.2	0.29
n-Butylbenzene	27,000	**1.6** J	1.1	0.28	**2.0**	1.6	0.41	1.2 U	1.2	0.31	1.2 U	1.2	0.31	1.2 U	1.2	0.32
1,2,4-Trichlorobenzene	80	5.4 UJ	5.4	0.36	7.8 U	7.8	0.52	5.9 U	5.9	0.40	5.9 U	5.9	0.39	6.2 U	6.2	0.41
Naphthalene	2,100	**2.4** J, J1	5.4	0.46	**6.5** J1	7.8	0.67	5.9 U	5.9	0.51	5.9 U	5.9	0.51	6.2 U	6.2	0.53
1,2,3-Trichlorobenzene	---	5.4 UJ	5.4	0.33	7.8 U	7.8	0.47	5.9 U	5.9	0.36	5.9 U	5.9	0.36	6.2 U	6.2	0.37
SEMIVOLATILES (µg/kg)																
Method SW8270D																
Phenol	1,900,000	19 U	19	8.2	18 U	18	7.9	18 U	18	8.0	19 U	19	8.1	18 U	18	7.9
Bis-(2-Chloroethyl) Ether	---	19 U	19	3.2	18 U	18	3.1	18 U	18	3.1	19 U	19	3.1	18 U	18	3.1
2-Chlorophenol	---	19 U	19	2.3	18 U	18	2.2	18 U	18	2.2	19 U	19	2.2	18 U	18	2.2
1,3-Dichlorobenzene	3,840	19 U	19	2.5	18 U	18	2.4	18 U	18	2.4	19 U	19	2.5	18 U	18	2.4
1,4-Dichlorobenzene	3,500	19 U	19	2.7	**44**	18	2.6	**14** J1	18	2.6	19 U	19	2.7	18 U	18	2.6
Benzyl Alcohol	8,000,000	19 U	19	5.8	18 U	18	5.6	18 U	18	5.6	19 U	19	5.7	18 U	18	5.6
1,2-Dichlorobenzene	68,000	19 U	19	2.4	18 U	18	2.3	18 U	18	2.3	19 U	19	2.3	18 U	18	2.3
2-Methylphenol	250,000	19 U	19	5.0	18 U	18	4.8	18 U	18	4.9	19 U	19	4.9	18 U	18	4.8
2,2'-Oxybis(1-Chloropropane)	---	19 U	19	3.6	18 U	18	3.4	18 U	18	3.5	19 U	19	3.5	18 U	18	3.4
4-Methylphenol	41,000	**15** J1	38	6.3	37 U	37	6.1	37 U	37	6.1	38 U	38	6.2	36 U	36	6.0
N-Nitroso-Di-N-Propylamine	---	19 U	19	3.2	18 U	18	3.1	18 U	18	3.1	19 U	19	3.2	18 U	18	3.1
Hexachloroethane	---	19 U	19	2.8	18 U	18	2.7	18 U	18	2.7	19 U	19	2.8	18 U	18	2.7
Nitrobenzene	---	19 U	19	3.8	18 U	18	3.7	18 U	18	3.8	19 U	19	3.8	18 U	18	3.7
Isophorone	---	19 U	19	2.7	18 U	18	2.6	18 U	18	2.6	19 U	19	2.7	18 U	18	2.6
2-Nitrophenol	---	94 U	94	37	92 U	92	36	92 U	92	36	94 U	94	36	91 U	91	35
2,4-Dimethylphenol	95,000	38 U	38	3.3	37 U	37	3.2	37 U	37	3.2	38 UJ	38	3.3	36 UJ	36	3.2
Benzoic Acid	9,000	380 U	380	95	370 U	370	93	370 U	370	93	380 UJ	380	95	360 UJ	360	92
bis(2-Chloroethoxy) Methane	---	19 U	19	1.9	18 U	18	1.8	18 U	18	1.9	19 U	19	1.9	18 U	18	1.8
2,4-Dichlorophenol	---	190 U	190	20	180 U	180	20	180 U	180	20	190 U	190	20	180 U	180	20
1,2,4-Trichlorobenzene	80	19 U	19	3.3	18 U	18	3.2	18 U	18	3.2	19 U	19	3.3	18 U	18	3.2
Naphthalene	2,100	**35**	19	2.6	**100**	18	2.5	18 U	18	2.6	**20**	19	2.6	**12** J1	18	2.5
4-Chloroaniline	---	260 U	260	21	250 U	250	20	250 U	250	21	250 U	250	21	250 U	250	20
Hexachlorobutadiene	---	94 U	94	4.3	92 U	92	4.2	92 U	92	4.2	94 U	94	4.3	91 U	91	4.2
4-Chloro-3-methylphenol	740,000	94 U	94	14	92 U	92	14	92 U	92	14	94 U	94	14	91 U	91	14
2-Methylnaphthalene	320,000	**34**	19	2.9	**110**	18	2.8	18 U	18	2.8	**16** J1	19	2.9	18 U	18	2.8
Hexachlorocyclopentadiene	---	380 UJ	380	63	370 UJ	370	61	370 UJ	370	61	380 UJ	380	62	360 UJ	360	61
2,4,6-Trichlorophenol	---	94 U	94	21	92 U	92	21	92 U	92	21	94 U	94	21	91 U	91	20
2,4,5-Trichlorophenol	---	94 U	94	20	92 U	92	20	92 U	92	20	94 U	94	20	91 U	91	20
2-Chloronaphthalene	---	19 U	19	2.5	18 U	18	2.4	18 U	18	2.4	19 U	19	2.5	18 U	18	2.4
2-Nitroaniline	---	94 U	94	17	92 U	92	17	92 U	92	17	94 U	94	17	91 U	91	17
Dimethylphthalate	71	19 U	19	2.7	18 U	18	2.7	18 U	18	2.7	19 U	19	2.7	18 U	18	2.6
Acenaphthylene	---	19 U	19	5.4	**62**	18	5.2	18 U	18	5.3	**26**	19	5.4	18 U	18	5.2
3-Nitroaniline	---	94 U	94	21	92 U	92	21	92 U	92	21	94 U	94	21	91 U	91	21
Acenaphthene	230,000	**12** J1	19	3.1	**390**	18	3.0	18 U	18	3.0	**9.4** J1	19	3.1	18 U	18	3.0
2,4-Dinitrophenol	---	800 U	800	100	780 U	780	100	790 U	790	100	800 U	800	100	780 U	780	100
4-Nitrophenol	---	94 UJ	94	33	92 UJ	92	32	92 UJ	92	32	94 U	94	33	91 U	91	32
Dibenzofuran	80,000	**15** J1	19	3.9	**53**	18	3.8	18 U	18	3.8	19 U	19	3.9	18 U	18	3.7
2,6-Dinitrotoluene	---	94 U	94	29	92 U	92	28	92 U	92	28	94 U	94	29	91 U	91	28
2,4-Dinitrotoluene	---	94 U	94	18	92 U	92	18	92 U	92	18	94 U	94	18	91 U	91	18
Diethylphthalate	178,000	47 U	47	35	46 U	46	34	46 U	46	34	47 U	47	34	46 U	46	33
4-Chlorophenyl-phenylether	---	19 U	19	5.0	18 U	18	4.9	18 U	18	4.9	19 U	19	5.0	18 U	18	4.8
Fluorene	150,000	**20**	19	4.1	**430**	18	4.0	18 U	18	4.0	19 U	19	4.1	18 U	18	4.0
4-Nitroaniline	---	94 U	94	36	92 U	92	35	92 U	92	35	94 UJ	94	36	91 UJ	91	35

TABLE M-2
DIRECT-PUSH SOIL BORINGS SOIL ANALYTICAL RESULTS
BOEING ISAACSON-THOMPSON
REMEDIAL INVESTIGATION

	Preliminary Cleanup Level	IT-SB-5(5-6.5) TU65M 10/31/2011			IT-SB-5(8-9.5) TU65N 10/31/2011			IT-SB-5(16-17.5) TU65O 10/31/2011			IT-SB-6(2-3.5) TU90H 11/01/2011			IT-SB-6(5-6.5) TU90I 11/01/2011		
		Result	Reporting Limit	Detection Limit	Result	Reporting Limit	Detection Limit	Result	Reporting Limit	Detection Limit	Result	Reporting Limit	Detection Limit	Result	Reporting Limit	Detection Limit
4,6-Dinitro-2-Methylphenol	---	190 U	190	20	180 U	180	19	180 U	180	20	190 U	190	20	180 U	180	19
N-Nitrosodiphenylamine	204,000	19 U	19	5.1	18 U	18	4.9	18 U	18	5.0	19 U	19	5.1	18 U	18	4.9
4-Bromophenyl-phenylether	---	19 U	19	4.7	18 U	18	4.6	18 U	18	4.7	19 U	19	4.7	18 U	18	4.6
Hexachlorobenzene	---	19 U	19	4.1	18 U	18	3.9	18 U	18	4.0	19 U	19	4.0	18 U	18	3.9
Pentachlorophenol	---	190 UJ	190	46	180 UJ	180	44	180 UJ	180	45	190 U	190	46	180 U	180	44
Phenanthrene	---	**120**	19	3.4	**3200**	55	10	**11** J1	18	3.4	**90**	19	3.4	**35**	18	3.3
Carbazole	50,000	19 U	19	2.5	**72**	18	2.5	18 U	18	2.5	19 UJ	19	2.5	18 UJ	18	2.5
Anthracene	1,600,000	**18** J1	19	4.2	**650**	18	4.1	18 U	18	4.2	**20**	19	4.2	18 U	18	4.1
Di-n-Butylphthalate	26,000	19 U	19	7.7	18 U	18	7.5	18 U	18	7.5	**200**	19	7.7	**18**	18	7.4
Fluoranthene	230,000	**94**	19	2.7	**2600**	55	8.0	**9.2** J1	18	2.7	**120**	19	2.7	**31**	18	2.7
Pyrene	240,000	**120**	19	1.8	**3200**	55	5.3	18 U	18	1.8	**130**	19	1.8	**42**	18	1.8
Butylbenzylphthalate	1,700	19 U	19	5.8	18 U	18	5.6	18 U	18	5.7	19 U	19	5.8	18 U	18	5.6
3,3'-Dichlorobenzidine	---	140 UJ	140	17	140 UJ	140	16	140 UJ	140	16	140 UJ	140	17	140 UJ	140	16
Benzo(a)anthracene	---	**40**	19	3.1	**1300**	18	3.0	18 U	18	3.0	**64**	19	3.1	**19**	18	3.0
bis(2-Ethylhexyl)phthalate	56,600	49 U	24	14	23 U	23	13	23 U	23	14	33 U	24	14	33 U	23	13
Chrysene	---	**79**	19	3.5	**1500**	18	3.4	**9.2** J1	18	3.5	**81**	19	3.5	**30**	18	3.4
Di-n-Octyl phthalate	---	19 U	19	5.5	18 U	18	5.4	18 U	18	5.4	19 U	19	5.5	18 U	18	5.3
Benzo(a)pyrene	---	**58**	19	5.1	**1200**	18	5.0	18 U	18	5.0	**86**	19	5.1	**31**	18	5.0
Indeno(1,2,3-cd)pyrene	---	**36**	19	4.4	**590**	18	4.3	18 U	18	4.3	**64**	19	4.4	**19**	18	4.3
Dibenz(a,h)anthracene	---	**18** J1	19	4.1	**230**	18	4.0	18 U	18	4.0	**17** J1	19	4.1	18 U	18	3.9
Benzo(g,h,i)perylene	---	**54**	19	4.2	**630**	18	4.0	18 U	18	4.1	**100**	19	4.1	**30**	18	4.0
1-Methylnaphthalene	16,000	**16** J1	19	2.5	**61**	18	2.5	18 U	18	2.5	**13** J1	19	2.5	18 U	18	2.4
Total Benzofluoranthenes	---	**92**	19	2.6	**1800**	18	2.5	18 U	18	2.5	**130**	19	2.6	**46**	18	2.5
cPAH TEQ	15	**77** J	NA	NA	**1607**	NA	NA	**0.09** J	NA	NA	**114** J	NA	NA	**42**	NA	NA
PAHs (µg/kg)																
Method SW8270D-SIM																
Naphthalene	2,100	**20**	9.4	4.9	**150**	13	6.7	**3.2** J1	4.7	2.5	**20**	4.7	2.5	**5.9**	4.5	2.4
2-Methylnaphthalene	320,000	**25**	9.4	2.9	**220**	13	3.9	**3.2** J1	4.7	1.4	**19**	4.7	1.4	**6.2**	4.5	1.4
1-Methylnaphthalene	16,000	**18**	9.4	3.2	**170**	13	4.4	**2.5** J1	4.7	1.6	**15**	4.7	1.6	**4.9**	4.5	1.5
Total Naphthalenes	---	**63**	NA	NA	**540**	NA	NA	**8.9** J1	NA	NA	**54**	NA	NA	**17**	NA	NA
Acenaphthylene	---	**8.3** J1	9.4	2.4	**1100**	190	48	**4.2** J1	4.7	1.2	**28**	4.7	1.2	**6.3**	4.5	1.1
Acenaphthene	230,000	**24**	9.4	2.5	**580**	13	3.4	**3.7** J1	4.7	1.2	**7.8**	4.7	1.2	**4.6**	4.5	1.2
Fluorene	150,000	**20**	9.4	2.4	**890**	13	3.3	**5.2**	4.7	1.2	**8.8**	4.7	1.2	**4.4** J1	4.5	1.2
Phenanthrene	---	**160**	9.4	3.7	**7800**	190	76	**23**	4.7	1.9	**120**	4.7	1.8	**51**	4.5	1.8
Anthracene	1,600,000	**24**	9.4	2.7	**1900**	190	56	**4.8**	4.7	1.4	**20**	4.7	1.4	**8.4**	4.5	1.3
Fluoranthene	230,000	**160**	9.4	3.3	**7900**	190	68	**24**	4.7	1.7	**140**	4.7	1.7	**54**	4.5	1.6
Pyrene	240,000	**160**	9.4	4.2	**11000**	190	85	**31**	4.7	2.1	**150**	4.7	2.1	**59**	4.5	2.0
Benzo(a)anthracene	---	**66**	9.4	3.0	**5400**	190	61	**18**	4.7	1.5	**65**	4.7	1.5	**27**	4.5	1.4
Chrysene	---	**100**	9.4	3.5	**6400**	190	72	**22**	4.7	1.8	**86**	4.7	1.8	**32**	4.5	1.7
Benzo(a)pyrene	---	**72**	9.4	3.3	**6700**	190	67	**12**	4.7	1.6	**100**	4.7	1.6	**40**	4.5	1.6
Indeno(1,2,3-cd)pyrene	---	**44**	9.4	6.5	**2600**	190	130	**10**	4.7	3.3	**67**	4.7	3.2	**23**	4.5	3.1
Dibenz(a,h)anthracene	---	**20**	9.4	4.5	**1100**	13	6.1	**3.4** J1	4.7	2.2	**24**	4.7	2.2	**9.6**	4.5	2.1
Benzo(g,h,i)perylene	---	**74**	9.4	5.7	**3200**	190	120	**12**	4.7	2.9	**100**	4.7	2.8	**32**	4.5	2.7
Dibenzofuran	80,000	**10**	9.4	2.8	**170**	13	3.9	4.7 U	4.7	1.4	**8.4**	4.7	1.4	4.5 U	4.5	1.4
Total Benzofluoranthenes	---	**120**	9.4	3.5	**7200**	190	71	**26**	4.7	1.7	**140**	4.7	1.7	**56**	4.5	1.7
cPAH TEQ	15	**98**	NA	NA	**8394**	NA	NA	**18** J	NA	NA	**130**	NA	NA	**52**	NA	NA

TABLE M-2
DIRECT-PUSH SOIL BORINGS SOIL ANALYTICAL RESULTS
BOEING ISAACSON-THOMPSON
REMEDIAL INVESTIGATION

	Preliminary Cleanup Level	IT-SB-5(5-6.5) TU65M 10/31/2011			IT-SB-5(8-9.5) TU65N 10/31/2011			IT-SB-5(16-17.5) TU65O 10/31/2011			IT-SB-6(2-3.5) TU90H 11/01/2011			IT-SB-6(5-6.5) TU90I 11/01/2011		
		Result	Reporting Limit	Detection Limit	Result	Reporting Limit	Detection Limit	Result	Reporting Limit	Detection Limit	Result	Reporting Limit	Detection Limit	Result	Reporting Limit	Detection Limit
PCBs (µg/kg)																
Method SW8082																
Aroclor 1016	0.72	32 U	32	2.0	32 U	32	1.9	32 U	32	2.0	33 U	33	2.0	32 U	32	1.9
Aroclor 1242	0.72	32 U	32	2.4	32 U	32	2.3	32 U	32	2.4	33 U	33	2.4	32 U	32	2.3
Aroclor 1248	220	32 U	32	2.4	32 U	32	2.3	32 U	32	2.4	33 U	33	2.4	32 U	32	2.3
Aroclor 1254	0.29	32 U	32	2.4	32 U	32	2.3	32 U	32	2.4	33 U	33	2.4	32 U	32	2.3
Aroclor 1260	5.4	32 U	32	2.4	32 U	32	2.3	32 U	32	2.4	**56** P	33	2.4	32 U	32	2.3
Aroclor 1221	---	32 U	32	2.4	32 U	32	2.3	32 U	32	2.4	33 U	33	2.4	32 U	32	2.3
Aroclor 1232	---	32 U	32	2.4	32 U	32	2.3	32 U	32	2.4	33 U	33	2.4	32 U	32	2.3
Total PCBs	1.8	ND	NA	NA	ND	NA	NA	ND	NA	NA	**56** P	NA	NA	ND	NA	NA
TOTAL PETROLEUM HYDROCARBONS (mg/kg)																
NWTPH-Dx																
Diesel-Range Organics	2,000	**140**	5.3	1.4	**130**	5.5	1.4	**16**	6.0	1.5	**35**	5.7	1.5	**10**	5.7	1.5
Oil-Range Organics	2,000	**340**	11	1.7	**220**	11	1.7	**14**	12	1.9	**90**	12	1.8	**29**	11	1.8
NWTPH-G																
Gasoline-Range Organics	100/30	**25**	5.5	2.6	**22**	8.1	3.9	6.6 U	6.6	3.1	7.3 U	7.3	3.5	7.4 U	7.4	3.5
TOTAL METALS (mg/kg)																
Methods 200.8/7471A/SW7196A																
Antimony	5	0.2 U	0.2	0.013	0.2 U	0.2	0.015	0.2 U	0.2	0.015	0.2 U	0.2	0.015	0.2 U	0.2	0.014
Arsenic	7	**5.9**	0.2	0.090	**4.3**	0.2	0.097	**1.2**	0.2	0.10	**54.5**	0.2	0.10	**11.9**	0.2	0.094
Barium	640	**69.0**	0.5	0.058	**70.4**	0.6	0.063	**17.7**	0.6	0.064	**54.3**	0.6	0.064	**40.1**	0.5	0.061
Beryllium	160	0.2 U	0.2	0.019	0.2 U	0.2	0.020	0.2 U	0.2	0.021	0.2 U	0.2	0.021	0.2 U	0.2	0.019
Cadmium	1.3	**1.0**	0.1	0.012	**0.9**	0.1	0.013	0.1 U	0.1	0.014	**0.4**	0.1	0.014	**1.9**	0.1	0.013
Chromium	1,480	**27.9**	0.5	0.039	**72.7**	0.6	0.043	**12.0**	0.6	0.044	**14.6**	0.6	0.044	**13.1**	0.5	0.041
Chromium VI	3.8	0.432 U	0.432	0.030	0.456 U	0.456	0.030	0.489 U	0.489	0.030	0.461 U	0.461	0.030	0.444 U	0.444	0.030
Copper	36	**44.8**	0.5	0.037	**61.1**	0.6	0.040	**9.5**	0.6	0.041	**53.9**	0.6	0.041	**23.2**	0.5	0.039
Lead	250	**76.7**	0.1	0.048	**82.0**	0.1	0.053	**3.2**	0.1	0.054	**53.9**	0.1	0.054	**15.3**	0.1	0.051
Mercury	1.5	**0.13**	0.03	0.0014	**0.02**	0.02	0.0013	0.03 U	0.03	0.0013	**0.17**	0.03	0.0014	**0.04**	0.02	0.0012
Nickel	210	**22.1**	0.5	0.050	**19.8**	0.6	0.055	**8.5**	0.6	0.056	**73.3**	0.6	0.056	**20.2**	0.5	0.053
Selenium	1.0	0.5 U	0.5	0.10	0.6 U	0.6	0.11	0.6 U	0.6	0.11	0.6 U	0.6	0.11	0.5 U	0.5	0.11
Silver	170	0.2 U	0.2	0.0082	0.2 U	0.2	0.0090	0.2 U	0.2	0.0092	0.2 U	0.2	0.0092	0.2 U	0.2	0.0086
Thallium	0.67	0.2 U	0.2	0.0031	0.2 U	0.2	0.0034	0.2 U	0.2	0.0034	0.2 U	0.2	0.0034	0.2 U	0.2	0.0032
Zinc	1,400	**116**	4	0.35	**303**	4	0.38	**27**	5	0.39	**231**	5	0.39	**57**	4	0.37

TABLE M-2
DIRECT-PUSH SOIL BORINGS SOIL ANALYTICAL RESULTS
BOEING ISAACSON-THOMPSON
REMEDIAL INVESTIGATION

	Preliminary Cleanup Level	IT-SB-6(8-9.5) TU90J 11/01/2011			IT-SB-6(13.5-15) TU90K 11/01/2011			IT-SB-7(2-3.5) TU90L 11/01/2011			IT-SB-7(5-6.5) TU90M 11/01/2011			IT-SB-7(8-9.5) TU90N 11/01/2011		
		Result	Reporting Limit	Detection Limit	Result	Reporting Limit	Detection Limit	Result	Reporting Limit	Detection Limit	Result	Reporting Limit	Detection Limit	Result	Reporting Limit	Detection Limit
VOLATILES (µg/kg)																
Method SW8260C																
Chloromethane	1,600	1.5 U	1.5	0.38	1.1 UJ	1.1	0.29	1.3 UJ	1.3	0.34	1.0 UJ	1.0	0.27	1.6 UJ	1.6	0.41
Bromomethane	---	1.5 UJ	1.5	0.27	1.1 UJ	1.1	0.20	1.3 UJ	1.3	0.24	1.0 UJ	1.0	0.19	1.6 UJ	1.6	0.29
Vinyl Chloride	7.4	1.5 U	1.5	0.34	1.1 U	1.1	0.26	1.3 U	1.3	0.31	1.0 U	1.0	0.24	1.6 U	1.6	0.37
Chloroethane	280,000	1.5 U	1.5	0.67	1.1 U	1.1	0.50	1.3 U	1.3	0.60	1.0 U	1.0	0.47	1.6 U	1.6	0.72
Methylene Chloride	2400	**3.5**	2.9	0.92	**2.6** J	2.2	0.69	**3.0** J	2.6	0.82	**1.7** J, J1	2.0	0.65	**4.1** J	3.1	0.99
Acetone	510,000	19 UJ	7.3	0.70	**11** J	5.5	0.53	**12** J	6.5	0.63	**45** J	5.1	0.49	**20** J	7.8	0.75
Carbon Disulfide	75,000	1.5 U	1.5	0.81	1.1 U	1.1	0.61	1.3 U	1.3	0.73	**1.0** J1	1.0	0.57	1.6 U	1.6	0.87
1,1-Dichloroethene	81	1.5 U	1.5	0.49	1.1 U	1.1	0.37	1.3 U	1.3	0.44	1.0 U	1.0	0.34	1.6 U	1.6	0.52
1,1-Dichloroethane	710	1.5 U	1.5	0.30	1.1 U	1.1	0.22	1.3 U	1.3	0.26	1.0 U	1.0	0.21	1.6 U	1.6	0.32
trans-1,2-Dichloroethene	19,000	1.5 U	1.5	0.39	1.1 U	1.1	0.29	1.3 U	1.3	0.35	1.0 U	1.0	0.27	1.6 U	1.6	0.42
cis-1,2-Dichloroethene	2,600	1.5 U	1.5	0.35	1.1 U	1.1	0.26	1.3 U	1.3	0.31	1.0 U	1.0	0.25	1.6 U	1.6	0.38
Chloroform	200	1.5 U	1.5	0.34	1.1 U	1.1	0.25	1.3 U	1.3	0.30	1.0 U	1.0	0.24	1.6 U	1.6	0.37
1,2-Dichloroethane	70	1.5 U	1.5	0.28	1.1 U	1.1	0.21	1.3 U	1.3	0.25	1.0 U	1.0	0.20	1.6 U	1.6	0.30
2-Butanone	430,000	7.3 U	7.3	0.75	5.5 U	5.5	0.56	6.5 U	6.5	0.67	**6.5**	5.1	0.52	7.8 U	7.8	0.80
1,1,1-Trichloroethane	1,900,000	1.5 U	1.5	0.33	1.1 U	1.1	0.25	1.3 U	1.3	0.29	1.0 U	1.0	0.23	1.6 U	1.6	0.35
Carbon Tetrachloride	21	1.5 U	1.5	0.31	1.1 U	1.1	0.23	1.3 U	1.3	0.28	1.0 U	1.0	0.22	1.6 U	1.6	0.33
Vinyl Acetate	---	7.3 U	7.3	0.55	5.5 U	5.5	0.42	6.5 U	6.5	0.49	5.1 U	5.1	0.39	7.8 U	7.8	0.60
Bromodichloromethane	89	1.5 U	1.5	0.37	1.1 U	1.1	0.28	1.3 U	1.3	0.33	1.0 U	1.0	0.26	1.6 U	1.6	0.40
1,2-Dichloropropane	92	1.5 U	1.5	0.24	1.1 U	1.1	0.18	1.3 U	1.3	0.21	1.0 U	1.0	0.17	1.6 U	1.6	0.25
cis-1,3-Dichloropropene	---	1.5 U	1.5	0.33	1.1 U	1.1	0.25	1.3 U	1.3	0.29	1.0 U	1.0	0.23	1.6 U	1.6	0.35
Trichloroethene	51	1.5 U	1.5	0.31	1.1 U	1.1	0.23	1.3 U	1.3	0.28	1.0 U	1.0	0.22	1.6 U	1.6	0.33
Dibromochloromethane	---	1.5 U	1.5	0.39	1.1 U	1.1	0.29	1.3 U	1.3	0.35	1.0 U	1.0	0.27	1.6 U	1.6	0.42
1,1,2-Trichloroethane	73	1.5 U	1.5	0.42	1.1 U	1.1	0.31	1.3 U	1.3	0.37	1.0 U	1.0	0.29	1.6 U	1.6	0.45
Benzene	93	1.5 U	1.5	0.43	**0.6** J1	1.1	0.32	1.3 U	1.3	0.38	**0.7** J1	1.0	0.30	1.6 U	1.6	0.46
trans-1,3-Dichloropropene	---	1.5 U	1.5	0.31	1.1 U	1.1	0.24	1.3 U	1.3	0.28	1.0 U	1.0	0.22	1.6 U	1.6	0.34
2-Chloroethylvinylether	---	7.3 U	7.3	0.40	5.5 U	5.5	0.30	6.5 U	6.5	0.36	5.1 U	5.1	0.28	7.8 U	7.8	0.43
Bromoform	---	1.5 U	1.5	0.43	1.1 U	1.1	0.32	1.3 U	1.3	0.39	1.0 U	1.0	0.30	1.6 U	1.6	0.46
4-Methyl-2-Pentanone (MIBK)	170,000	7.3 U	7.3	0.61	5.5 U	5.5	0.46	6.5 U	6.5	0.55	5.1 U	5.1	0.43	7.8 U	7.8	0.66
2-Hexanone	32,000	7.3 U	7.3	0.64	5.5 U	5.5	0.48	6.5 U	6.5	0.57	5.1 U	5.1	0.45	7.8 U	7.8	0.69
Tetrachloroethene	260	1.5 U	1.5	0.37	1.1 U	1.1	0.28	1.3 U	1.3	0.33	1.0 U	1.0	0.26	1.6 U	1.6	0.40
1,1,2,2-Tetrachloroethane	13	1.5 U	1.5	0.37	1.1 U	1.1	0.28	1.3 U	1.3	0.33	1.0 U	1.0	0.26	1.6 U	1.6	0.40
Toluene	100,000	1.5 U	1.5	0.22	1.1 U	1.1	0.16	1.3 U	1.3	0.20	**0.8** J1	1.0	0.15	1.6 U	1.6	0.24
Chlorobenzene	26,000	1.5 U	1.5	0.32	1.1 U	1.1	0.24	1.3 U	1.3	0.28	1.0 U	1.0	0.22	1.6 U	1.6	0.34
Ethylbenzene	230	1.5 U	1.5	0.29	1.1 U	1.1	0.22	1.3 U	1.3	0.26	1.0 U	1.0	0.21	1.6 U	1.6	0.32
Styrene	16,000,000	1.5 U	1.5	0.20	1.1 U	1.1	0.15	1.3 U	1.3	0.18	1.0 U	1.0	0.14	1.6 U	1.6	0.22
Trichlorofluoromethane	200,000	1.5 U	1.5	0.39	1.1 U	1.1	0.29	1.3 U	1.3	0.35	1.0 U	1.0	0.27	1.6 U	1.6	0.42
1,1,2-Trichloro-1,2,2-trifuoroethane	1,000,000,000	2.9 U	2.9	0.42	2.2 U	2.2	0.31	2.6 U	2.6	0.37	2.0 U	2.0	0.29	3.1 U	3.1	0.45
m,p-Xylene	160,000	1.5 U	1.5	0.57	1.1 U	1.1	0.43	1.3 U	1.3	0.51	1.0 U	1.0	0.40	1.6 U	1.6	0.61
o-Xylene	200,000	1.5 U	1.5	0.33	1.1 U	1.1	0.24	1.3 U	1.3	0.29	1.0 U	1.0	0.23	1.6 U	1.6	0.35
1,2-Dichlorobenzene	68,000	1.5 U	1.5	0.43	1.1 U	1.1	0.32	1.3 U	1.3	0.38	1.0 U	1.0	0.30	1.6 U	1.6	0.46
1,3-Dichlorobenzene	3,840	1.5 U	1.5	0.33	1.1 U	1.1	0.25	1.3 U	1.3	0.29	1.0 U	1.0	0.23	1.6 U	1.6	0.35
1,4-Dichlorobenzene	3,500	1.5 U	1.5	0.34	1.1 U	1.1	0.25	1.3 U	1.3	0.30	1.0 U	1.0	0.24	1.6 U	1.6	0.36
Acrolein	---	73 U	73	5.5	55 UJ	55	4.2	65 UJ	65	4.9	51 UJ	51	3.9	78 UJ	78	6.0
Methyl Iodide	---	1.5 U	1.5	0.31	1.1 U	1.1	0.23	1.3 U	1.3	0.28	1.0 U	1.0	0.22	1.6 U	1.6	0.34
Bromoethane	---	2.9 U	2.9	0.64	2.2 U	2.2	0.48	2.6 U	2.6	0.57	2.0 U	2.0	0.45	3.1 U	3.1	0.69
Acrylonitrile	---	7.3 U	7.3	1.5	5.5 U	5.5	1.1	6.5 U	6.5	1.3	5.1 U	5.1	1.1	7.8 U	7.8	1.6
1,1-Dichloropropene	---	1.5 U	1.5	0.45	1.1 U	1.1	0.34	1.3 U	1.3	0.41	1.0 U	1.0	0.32	1.6 U	1.6	0.49
Dibromomethane	---	1.5 U	1.5	0.21	1.1 U	1.1	0.16	1.3 U	1.3	0.19	1.0 U	1.0	0.15	1.6 U	1.6	0.23
1,1,1,2-Tetrachloroethane	---	1.5 U	1.5	0.34	1.1 U	1.1	0.25	1.3 U	1.3	0.30	1.0 U	1.0	0.24	1.6 U	1.6	0.36
1,2-Dibromo-3-chloropropane	---	7.3 U	7.3	0.85	5.5 U	5.5	0.64	6.5 U	6.5	0.76	5.1 U	5.1	0.60	7.8 U	7.8	0.92
1,2,3-Trichloropropane	---	2.9 U	2.9	0.75	2.2 U	2.2	0.56	2.6 U	2.6	0.67	2.0 U	2.0	0.53	3.1 U	3.1	0.81
trans-1,4-Dichloro-2-butene	---	7.3 U	7.3	0.64	5.5 U	5.5	0.48	6.5 U	6.5	0.57	5.1 U	5.1	0.45	7.8 U	7.8	0.68
1,3,5-Trimethylbenzene	800,000	1.5 U	1.5	0.37	1.1 U	1.1	0.28	1.3 U	1.3	0.33	1.0 U	1.0	0.26	1.6 U	1.6	0.40
1,2,4-Trimethylbenzene	800,000	1.5 U	1.5	0.33	1.1 U	1.1	0.25	1.3 U	1.3	0.30	1.0 U	1.0	0.24	1.6 U	1.6	0.36
Hexachlorobutadiene	---	7.3 U	7.3	0.60	5.5 U	5.5	0.45	6.5 U	6.5	0.53	5.1 U	5.1	0.42	7.8 U	7.8	0.64
Ethylene Dibromide	---	1.5 U	1.5	0.26	1.1 U	1.1	0.19	1.3 U	1.3	0.23	1.0 U	1.0	0.18	1.6 U	1.6	0.28
Bromochloromethane	---	1.5 U	1.5	0.47	1.1 U	1.1	0.35	1.3 U	1.3	0.42	1.0 U	1.0	0.33	1.6 U	1.6	0.50

TABLE M-2
DIRECT-PUSH SOIL BORINGS SOIL ANALYTICAL RESULTS
BOEING ISAACSON-THOMPSON
REMEDIAL INVESTIGATION

	Preliminary Cleanup Level	IT-SB-6(8-9.5) TU90J 11/01/2011			IT-SB-6(13.5-15) TU90K 11/01/2011			IT-SB-7(2-3.5) TU90L 11/01/2011			IT-SB-7(5-6.5) TU90M 11/01/2011			IT-SB-7(8-9.5) TU90N 11/01/2011		
		Result	Reporting Limit	Detection Limit	Result	Reporting Limit	Detection Limit	Result	Reporting Limit	Detection Limit	Result	Reporting Limit	Detection Limit	Result	Reporting Limit	Detection Limit
2,2-Dichloropropane	---	1.5 U	1.5	0.42	1.1 U	1.1	0.32	1.3 U	1.3	0.38	1.0 U	1.0	0.30	1.6 U	1.6	0.46
1,3-Dichloropropane	---	1.5 U	1.5	0.30	1.1 U	1.1	0.23	1.3 U	1.3	0.27	1.0 U	1.0	0.21	1.6 U	1.6	0.33
Isopropylbenzene	78,000	1.5 U	1.5	0.34	1.1 U	1.1	0.25	1.3 U	1.3	0.30	1.0 U	1.0	0.24	1.6 U	1.6	0.36
n-Propylbenzene	11,000	1.5 U	1.5	0.40	1.1 U	1.1	0.30	1.3 U	1.3	0.35	1.0 U	1.0	0.28	1.6 U	1.6	0.42
Bromobenzene	---	1.5 U	1.5	0.22	1.1 U	1.1	0.17	1.3 U	1.3	0.20	1.0 U	1.0	0.16	1.6 U	1.6	0.24
2-Chlorotoluene	---	1.5 U	1.5	0.44	1.1 U	1.1	0.33	1.3 U	1.3	0.39	1.0 U	1.0	0.31	1.6 U	1.6	0.47
4-Chlorotoluene	400,000	1.5 U	1.5	0.40	1.1 U	1.1	0.30	1.3 U	1.3	0.36	1.0 U	1.0	0.28	1.6 U	1.6	0.43
tert-Butylbenzene	---	1.5 U	1.5	0.44	1.1 U	1.1	0.33	1.3 U	1.3	0.40	1.0 U	1.0	0.31	1.6 U	1.6	0.48
sec-Butylbenzene	---	1.5 U	1.5	0.35	1.1 U	1.1	0.26	1.3 U	1.3	0.31	1.0 U	1.0	0.25	1.6 U	1.6	0.38
4-Isopropyltoluene	---	1.5 U	1.5	0.34	1.1 U	1.1	0.26	1.3 U	1.3	0.31	1.0 U	1.0	0.24	1.6 U	1.6	0.37
n-Butylbenzene	27,000	1.5 U	1.5	0.38	1.1 U	1.1	0.29	1.3 U	1.3	0.34	1.0 U	1.0	0.27	1.6 U	1.6	0.41
1,2,4-Trichlorobenzene	80	7.3 U	7.3	0.48	5.5 U	5.5	0.36	6.5 U	6.5	0.43	5.1 U	5.1	0.34	7.8 U	7.8	0.52
Naphthalene	2,100	7.3 U	7.3	0.62	5.5 U	5.5	0.47	6.5 U	6.5	0.56	5.1 U	5.1	0.44	7.8 U	7.8	0.67
1,2,3-Trichlorobenzene	---	7.3 U	7.3	0.44	5.5 U	5.5	0.33	6.5 U	6.5	0.40	5.1 U	5.1	0.31	7.8 U	7.8	0.48
SEMIVOLATILES (µg/kg)																
Method SW8270D																
Phenol	1,900,000	18 U	18	7.9	19 U	19	8.2	18 U	18	7.8	18 U	18	7.8	19 U	19	8.3
Bis-(2-Chloroethyl) Ether	---	18 U	18	3.1	19 U	19	3.2	18 U	18	3.0	18 U	18	3.0	19 U	19	3.2
2-Chlorophenol	---	18 U	18	2.2	19 U	19	2.3	18 U	18	2.2	18 U	18	2.1	19 U	19	2.3
1,3-Dichlorobenzene	3,840	18 U	18	2.4	19 U	19	2.5	18 U	18	2.4	18 U	18	2.4	19 U	19	2.5
1,4-Dichlorobenzene	3,500	18 U	18	2.6	19 U	19	2.7	18 U	18	2.6	18 U	18	2.6	19 U	19	2.7
Benzyl Alcohol	8,000,000	18 U	18	5.6	19 U	19	5.7	18 U	18	5.5	18 U	18	5.5	19 U	19	5.8
1,2-Dichlorobenzene	68,000	18 U	18	2.3	19 U	19	2.4	18 U	18	2.3	18 U	18	2.2	19 U	19	2.4
2-Methylphenol	250,000	18 U	18	4.8	19 U	19	5.0	18 U	18	4.7	18 U	18	4.7	19 U	19	5.0
2,2'-Oxybis(1-Chloropropane)	---	18 U	18	3.4	19 U	19	3.5	18 U	18	3.4	18 U	18	3.4	19 U	19	3.6
4-Methylphenol	41,000	37 U	37	6.1	38 U	38	6.3	36 U	36	6.0	36 U	36	5.9	38 U	38	6.4
N-Nitroso-Di-N-Propylamine	---	18 U	18	3.1	19 U	19	3.2	18 U	18	3.0	18 U	18	3.0	19 U	19	3.2
Hexachloroethane	---	18 U	18	2.7	19 U	19	2.8	18 U	18	2.7	18 U	18	2.6	19 U	19	2.8
Nitrobenzene	---	18 U	18	3.7	19 U	19	3.8	18 U	18	3.7	18 U	18	3.6	19 U	19	3.9
Isophorone	---	18 U	18	2.6	19 U	19	2.7	18 U	18	2.6	18 U	18	2.6	19 U	19	2.7
2-Nitrophenol	---	92 U	92	36	94 U	94	37	90 U	90	35	90 U	90	35	96 U	96	37
2,4-Dimethylphenol	95,000	37 UJ	37	3.2	38 UJ	38	3.3	36 UJ	36	3.1	36 UJ	36	3.1	38 UJ	38	3.3
Benzoic Acid	9,000	370 UJ	370	93	380 UJ	380	95	360 UJ	360	91	360 UJ	360	91	380 UJ	380	97
bis(2-Chloroethoxy) Methane	---	18 U	18	1.8	19 U	19	1.9	18 U	18	1.8	18 U	18	1.8	19 U	19	1.9
2,4-Dichlorophenol	---	180 U	180	20	190 U	190	20	180 U	180	19	180 U	180	19	190 U	190	21
1,2,4-Trichlorobenzene	80	18 U	18	3.2	19 U	19	3.3	18 U	18	3.1	18 U	18	3.1	19 U	19	3.3
Naphthalene	2,100	18 U	18	2.5	19 U	19	2.6	**15** J1	18	2.5	18 U	18	2.5	19 U	19	2.6
4-Chloroaniline	---	250 U	250	20	260 U	260	21	240 U	240	20	240 U	240	20	260 U	260	21
Hexachlorobutadiene	---	92 U	92	4.2	94 U	94	4.3	90 U	90	4.1	90 U	90	4.1	96 U	96	4.4
4-Chloro-3-methylphenol	740,000	92 U	92	14	94 U	94	14	90 U	90	14	90 U	90	14	96 U	96	14
2-Methylnaphthalene	320,000	18 U	18	2.8	19 U	19	2.9	**14** J1	18	2.8	18 U	18	2.7	19 U	19	2.9
Hexachlorocyclopentadiene	---	370 UJ	370	61	380 UJ	380	63	360 UJ	360	60	360 UJ	360	59	380 UJ	380	64
2,4,6-Trichlorophenol	---	92 U	92	21	94 U	94	21	90 U	90	20	90 U	90	20	96 U	96	21
2,4,5-Trichlorophenol	---	92 U	92	20	94 U	94	20	90 U	90	19	90 U	90	19	96 U	96	20
2-Chloronaphthalene	---	18 U	18	2.4	19 U	19	2.5	18 U	18	2.4	18 U	18	2.4	19 U	19	2.5
2-Nitroaniline	---	92 U	92	17	94 U	94	17	90 U	90	17	90 U	90	16	96 U	96	18
Dimethylphthalate	71	18 U	18	2.7	19 U	19	2.7	18 U	18	2.6	18 U	18	2.6	19 U	19	2.8
Acenaphthylene	---	18 U	18	5.2	19 U	19	5.4	**9.0** J1	18	5.2	18 U	18	5.1	19 U	19	5.5
3-Nitroaniline	---	92 U	92	21	94 U	94	21	90 U	90	20	90 U	90	20	96 U	96	22
Acenaphthene	230,000	18 U	18	3.0	19 U	19	3.1	18 U	18	3.0	18 U	18	2.9	19 U	19	3.1
2,4-Dinitrophenol	---	780 U	780	100	800 U	800	100	770 U	770	100	760 U	760	99	810 U	810	110
4-Nitrophenol	---	92 U	92	32	94 U	94	33	90 U	90	31	90 U	90	31	96 U	96	33
Dibenzofuran	80,000	18 U	18	3.8	19 U	19	3.9	18 U	18	3.7	18 U	18	3.7	19 U	19	3.9
2,6-Dinitrotoluene	---	92 U	92	28	94 U	94	29	90 U	90	28	90 U	90	27	96 U	96	29
2,4-Dinitrotoluene	---	92 U	92	18	94 U	94	18	90 U	90	18	90 U	90	17	96 U	96	19
Diethylphthalate	178,000	46 U	46	34	47 U	47	35	45 U	45	33	45 U	45	33	48 U	48	35
4-Chlorophenyl-phenylether	---	18 U	18	4.9	19 U	19	5.0	18 U	18	4.8	18 U	18	4.7	19 U	19	5.1
Fluorene	150,000	18 U	18	4.0	19 U	19	4.1	18 U	18	3.9	18 U	18	3.9	19 U	19	4.2
4-Nitroaniline	---	92 UJ	92	35	94 UJ	94	36	90 UJ	90	34	90 UJ	90	34	96 UJ	96	36

TABLE M-2
DIRECT-PUSH SOIL BORINGS SOIL ANALYTICAL RESULTS
BOEING ISAACSON-THOMPSON
REMEDIAL INVESTIGATION

	Preliminary Cleanup Level	IT-SB-6(8-9.5) TU90J 11/01/2011			IT-SB-6(13.5-15) TU90K 11/01/2011			IT-SB-7(2-3.5) TU90L 11/01/2011			IT-SB-7(5-6.5) TU90M 11/01/2011			IT-SB-7(8-9.5) TU90N 11/01/2011		
		Result	Reporting Limit	Detection Limit	Result	Reporting Limit	Detection Limit	Result	Reporting Limit	Detection Limit	Result	Reporting Limit	Detection Limit	Result	Reporting Limit	Detection Limit
4,6-Dinitro-2-Methylphenol	---	180 U	180	19	190 U	190	20	180 U	180	19	180 U	180	19	190 U	190	20
N-Nitrosodiphenylamine	204,000	18 U	18	4.9	19 U	19	5.1	18 U	18	4.9	18 U	18	4.8	19 U	19	5.2
4-Bromophenyl-phenylether	---	18 U	18	4.6	19 U	19	4.7	18 U	18	4.5	18 U	18	4.5	19 U	19	4.8
Hexachlorobenzene	---	18 U	18	3.9	19 U	19	4.0	18 U	18	3.9	18 U	18	3.8	19 U	19	4.1
Pentachlorophenol	---	180 U	180	44	190 U	190	46	180 U	180	44	180 U	180	43	190 U	190	46
Phenanthrene	---	18 U	18	3.3	19 U	19	3.4	**44**	18	3.3	**23**	18	3.3	19 U	19	3.5
Carbazole	50,000	18 UJ	18	2.5	19 UJ	19	2.5	18 UJ	18	2.4	18 UJ	18	2.4	19 UJ	19	2.6
Anthracene	1,600,000	18 U	18	4.1	19 U	19	4.2	**12** J1	18	4.1	18 U	18	4.0	19 U	19	4.3
Di-n-Butylphthalate	26,000	18 U	18	7.5	19 U	19	7.7	18 U	18	7.4	**24**	18	7.3	19 U	19	7.8
Fluoranthene	230,000	18 U	18	2.7	19 U	19	2.7	**50**	18	2.6	**19**	18	2.6	19 U	19	2.8
Pyrene	240,000	18 U	18	1.8	19 U	19	1.8	**63**	18	1.8	**24**	18	1.7	19 U	19	1.9
Butylbenzylphthalate	1,700	18 U	18	5.6	19 U	19	5.8	18 U	18	5.6	18 U	18	5.5	19 U	19	5.9
3,3'-Dichlorobenzidine	---	140 UJ	140	16	140 UJ	140	17	140 UJ	140	16	130 UJ	130	16	140 UJ	140	17
Benzo(a)anthracene	---	18 U	18	3.0	19 U	19	3.1	**26**	18	3.0	**12** J1	18	2.9	19 U	19	3.2
bis(2-Ethylhexyl)phthalate	56,600	23 U	23	13	26 U	24	14	23 U	23	13	24 U	22	13	24 U	24	14
Chrysene	---	18 U	18	3.4	19 U	19	3.5	**40**	18	3.4	**16** J1	18	3.4	19 U	19	3.6
Di-n-Octyl phthalate	---	18 U	18	5.4	19 U	19	5.5	18 U	18	5.3	18 U	18	5.2	19 U	19	5.6
Benzo(a)pyrene	---	18 U	18	5.0	19 U	19	5.1	**34**	18	4.9	**21**	18	4.9	19 U	19	5.2
Indeno(1,2,3-cd)pyrene	---	18 U	18	4.3	19 U	19	4.4	**25**	18	4.2	**18**	18	4.2	19 U	19	4.5
Dibenz(a,h)anthracene	---	18 U	18	4.0	19 U	19	4.1	18 U	18	3.9	18 U	18	3.9	19 U	19	4.1
Benzo(g,h,i)perylene	---	18 U	18	4.0	19 U	19	4.2	**42**	18	4.0	**26**	18	3.9	19 U	19	4.2
1-Methylnaphthalene	16,000	18 U	18	2.5	19 U	19	2.5	18 U	18	2.4	18 U	18	2.4	19 U	19	2.6
Total Benzofluoranthenes	---	18 U	18	2.5	19 U	19	2.6	**56**	18	2.5	**29**	18	2.5	19 U	19	2.6
cPAH TEQ	15	ND	NA	NA	ND	NA	NA	**47**	NA	NA	**27** J	NA	NA	ND	NA	NA
PAHs (µg/kg)																
Method SW8270D-SIM																
Naphthalene	2,100	4.8 U	4.8	2.5	4.6 U	4.6	2.4	**14**	4.7	2.5	**4.9**	4.5	2.4	4.6 U	4.6	2.4
2-Methylnaphthalene	320,000	4.8 U	4.8	1.5	4.6 U	4.6	1.4	**12**	4.7	1.4	**5.2**	4.5	1.4	4.6 U	4.6	1.4
1-Methylnaphthalene	16,000	4.8 U	4.8	1.6	4.6 U	4.6	1.6	**8.2**	4.7	1.6	**3.2** J1	4.5	1.5	4.6 U	4.6	1.6
Total Naphthalenes	---	4.8 U	NA	NA	4.6 U	NA	NA	**34.2**	NA	NA	**13.3** J1	NA	NA	4.6 U	NA	NA
Acenaphthylene	---	4.8 U	4.8	1.2	4.6 U	4.6	1.2	**8.8**	4.7	1.2	4.5 U	4.5	1.1	4.6 U	4.6	1.1
Acenaphthene	230,000	4.8 U	4.8	1.3	4.6 U	4.6	1.2	**9.4**	4.7	1.2	**2.3** J1	4.5	1.2	4.6 U	4.6	1.2
Fluorene	150,000	4.8 U	4.8	1.2	4.6 U	4.6	1.2	**7.7**	4.7	1.2	4.5 U	4.5	1.2	4.6 U	4.6	1.2
Phenanthrene	---	4.8 U	4.8	1.9	4.6 U	4.6	1.8	**83**	4.7	1.9	**15**	4.5	1.8	**2.4** J1	4.6	1.8
Anthracene	1,600,000	4.8 U	4.8	1.4	4.6 U	4.6	1.3	**14**	4.7	1.4	**2.9** J1	4.5	1.3	4.6 U	4.6	1.3
Fluoranthene	230,000	4.8 U	4.8	1.7	4.6 U	4.6	1.6	**87**	4.7	1.7	**24**	4.5	1.6	4.6 U	4.6	1.6
Pyrene	240,000	4.8 U	4.8	2.1	4.6 U	4.6	2.0	**100**	4.7	2.1	**23**	4.5	2.0	4.6 U	4.6	2.0
Benzo(a)anthracene	---	4.8 U	4.8	1.5	4.6 U	4.6	1.5	**48**	4.7	1.5	**16**	4.5	1.4	4.6 U	4.6	1.5
Chrysene	---	4.8 U	4.8	1.8	4.6 U	4.6	1.7	**60**	4.7	1.8	**18**	4.5	1.7	4.6 U	4.6	1.7
Benzo(a)pyrene	---	4.8 U	4.8	1.7	4.6 U	4.6	1.6	**85**	4.7	1.7	**17**	4.5	1.6	4.6 U	4.6	1.6
Indeno(1,2,3-cd)pyrene	---	4.8 U	4.8	3.3	4.6 U	4.6	3.2	**52**	4.7	3.3	**8.8**	4.5	3.1	4.6 U	4.6	3.2
Dibenz(a,h)anthracene	---	4.8 U	4.8	2.3	4.6 U	4.6	2.2	**17**	4.7	2.2	4.5 U	4.5	2.1	4.6 U	4.6	2.2
Benzo(g,h,i)perylene	---	4.8 U	4.8	2.9	4.6 U	4.6	2.8	**73**	4.7	2.9	**10**	4.5	2.7	4.6 U	4.6	2.8
Dibenzofuran	80,000	4.8 U	4.8	1.5	4.6 U	4.6	1.4	**4.5** J1	4.7	1.4	4.5 U	4.5	1.4	4.6 U	4.6	1.4
Total Benzofluoranthenes	---	4.8 U	4.8	1.8	4.6 U	4.6	1.7	**110**	4.7	1.7	**29**	4.5	1.7	4.6 U	4.6	1.7
cPAH TEQ	15	ND	NA	NA	ND	NA	NA	**108**	NA	NA	**23**	NA	NA	ND	NA	NA

TABLE M-2
DIRECT-PUSH SOIL BORINGS SOIL ANALYTICAL RESULTS
BOEING ISAACSON-THOMPSON
REMEDIAL INVESTIGATION

	Preliminary Cleanup Level	IT-SB-6(8-9.5) TU90J 11/01/2011			IT-SB-6(13.5-15) TU90K 11/01/2011			IT-SB-7(2-3.5) TU90L 11/01/2011			IT-SB-7(5-6.5) TU90M 11/01/2011			IT-SB-7(8-9.5) TU90N 11/01/2011		
		Result	Reporting Limit	Detection Limit	Result	Reporting Limit	Detection Limit	Result	Reporting Limit	Detection Limit	Result	Reporting Limit	Detection Limit	Result	Reporting Limit	Detection Limit
PCBs (µg/kg)																
Method SW8082																
Aroclor 1016	0.72	32 U	32	2.0	32 U	32	2.0	31 U	31	1.9	31 U	31	1.9	30 U	30	1.8
Aroclor 1242	0.72	32 U	32	2.4	32 U	32	2.4	31 U	31	2.3	31 U	31	2.3	30 U	30	2.2
Aroclor 1248	220	32 U	32	2.4	32 U	32	2.4	31 U	31	2.3	31 U	31	2.3	30 U	30	2.2
Aroclor 1254	0.29	32 U	32	2.4	32 U	32	2.4	31 U	31	2.3	31 U	31	2.3	30 U	30	2.2
Aroclor 1260	5.4	32 U	32	2.4	32 U	32	2.4	31 U	31	2.3	31 U	31	2.3	30 U	30	2.2
Aroclor 1221	---	32 U	32	2.4	32 U	32	2.4	31 U	31	2.3	31 U	31	2.3	30 U	30	2.2
Aroclor 1232	---	32 U	32	2.4	32 U	32	2.4	31 U	31	2.3	31 U	31	2.3	30 U	30	2.2
Total PCBs	1.8	ND	NA	NA	ND	NA	NA	ND	NA	NA	ND	NA	NA	ND	NA	NA
TOTAL PETROLEUM HYDROCARBONS (mg/kg)																
NWTPH-Dx																
Diesel-Range Organics	2,000	5.8 U	5.8	1.5	6.2 U	6.2	1.6	**21**	5.6	1.4	**6.7**	5.7	1.5	5.8 U	5.8	1.5
Oil-Range Organics	2,000	12 U	12	1.8	12 U	12	1.9	**41**	11	1.8	**14**	11	1.8	12 U	12	1.8
NWTPH-G																
Gasoline-Range Organics	100/30	8.6 U	8.6	4.1	7.4 U	7.4	3.5	7.0 U	7.0	3.3	6.0 U	6.0	2.9	7.6 U	7.6	3.6
TOTAL METALS (mg/kg)																
Methods 200.8/7471A/SW7196A																
Antimony	5	0.2 U	0.2	0.015	0.2 U	0.2	0.015	0.2 U	0.2	0.014	0.2 U	0.2	0.014	0.2 U	0.2	0.014
Arsenic	7	**2.6**	0.2	0.097	**2.6**	0.2	0.10	**10.6**	0.2	0.095	**4.1**	0.2	0.092	**1.8**	0.2	0.091
Barium	640	**48.7**	0.6	0.063	**32.1**	0.6	0.065	**54.2**	0.5	0.061	**46.6**	0.5	0.059	**34.0**	0.5	0.059
Beryllium	160	0.2 U	0.2	0.020	0.2 U	0.2	0.021	0.2 U	0.2	0.020	0.2 U	0.2	0.019	0.2 U	0.2	0.019
Cadmium	1.3	0.1 U	0.1	0.013	0.1 U	0.1	0.014	0.1 U	0.1	0.013	**0.2**	0.1	0.013	0.1 U	0.1	0.013
Chromium	1,480	**11.9**	0.6	0.042	**15.1**	0.6	0.044	**12.5**	0.5	0.041	**14.5**	0.5	0.040	**10.0**	0.5	0.040
Chromium VI	3.8	0.457 U	0.457	0.030	0.513 U	0.513	0.030	0.447 U	0.447	0.030	0.444 U	0.444	0.030	0.449 U	0.449	0.030
Copper	36	**17.7**	0.6	0.040	**9.6**	0.6	0.042	**29.7**	0.5	0.039	**19.4**	0.5	0.038	**12.0**	0.5	0.038
Lead	250	**2.1**	0.1	0.052	**12.0**	0.1	0.055	**16.7**	0.1	0.051	**14.7**	0.1	0.050	**1.5**	0.1	0.049
Mercury	1.5	**0.02**	0.02	0.0011	0.03 U	0.03	0.0016	**0.08**	0.03	0.0014	**0.13**	0.02	0.0011	0.02 U	0.02	0.0013
Nickel	210	**9.6**	0.6	0.055	**7.8**	0.6	0.057	**11.3**	0.5	0.053	**10.8**	0.5	0.052	**8.2**	0.5	0.051
Selenium	1.0	0.6 U	0.6	0.11	0.6 U	0.6	0.12	0.5 U	0.5	0.11	0.5 U	0.5	0.10	0.5 U	0.5	0.10
Silver	170	0.2 U	0.2	0.0089	0.2 U	0.2	0.0093	0.2 U	0.2	0.0087	0.2 U	0.2	0.0084	0.2 U	0.2	0.0084
Thallium	0.67	0.2 U	0.2	0.0034	0.2 U	0.2	0.0035	0.2 U	0.2	0.0033	0.2 U	0.2	0.0032	0.2 U	0.2	0.0031
Zinc	1,400	**52**	4	0.38	**73**	5	0.40	**59**	4	0.37	**61**	4	0.36	**22**	4	0.36

TABLE M-2
DIRECT-PUSH SOIL BORINGS SOIL ANALYTICAL RESULTS
BOEING ISAACSON-THOMPSON
REMEDIAL INVESTIGATION

	Preliminary Cleanup Level	IT-SB-7(13-14.5) TU90O 11/01/2011			IT-SB-8(2-3.5) TX01F 11/14/2011			IT-SB-8(5-6.5) TX01G 11/14/2011			IT-SB-8(8-9.5) TX01H 11/14/2011			IT-SB-8(14-15.5) TX01I 11/14/2011		
		Result	Reporting Limit	Detection Limit	Result	Reporting Limit	Detection Limit	Result	Reporting Limit	Detection Limit	Result	Reporting Limit	Detection Limit	Result	Reporting Limit	Detection Limit
VOLATILES (µg/kg)																
Method SW8260C																
Chloromethane	1,600	1.2 UJ	1.2	0.31	1.4 UJ	1.4	0.38	1.3 UJ	1.3	0.34	1.2 UJ	1.2	0.31	1.3 UJ	1.3	0.35
Bromomethane	---	1.2 UJ	1.2	0.22	1.4 UJ	1.4	0.27	1.3 UJ	1.3	0.24	1.2 UJ	1.2	0.22	1.3 UJ	1.3	0.25
Vinyl Chloride	7.4	1.2 U	1.2	0.28	1.4 U	1.4	0.34	1.3 U	1.3	0.30	1.2 U	1.2	0.28	1.3 U	1.3	0.31
Chloroethane	280,000	1.2 U	1.2	0.54	1.4 UJ	1.4	0.66	1.3 UJ	1.3	0.59	1.2 UJ	1.2	0.55	1.3 UJ	1.3	0.61
Methylene Chloride	2400	**2.8** J	2.4	0.75	2.9 UJ	2.9	0.91	**4.9** J	2.6	0.81	**1.3** J, J1	2.4	0.76	**1.6** J, J1	2.7	0.84
Acetone	510,000	**13** J	5.9	0.57	**37** J	7.2	0.69	**63** J	6.4	0.62	**34** J	5.9	0.57	**8.9** J	6.6	0.64
Carbon Disulfide	75,000	1.2 U	1.2	0.66	**1.7**	1.4	0.80	1.3 U	1.3	0.72	1.2 U	1.2	0.67	1.3 U	1.3	0.74
1,1-Dichloroethene	81	1.2 U	1.2	0.40	1.4 U	1.4	0.48	1.3 U	1.3	0.43	1.2 U	1.2	0.40	1.3 U	1.3	0.45
1,1-Dichloroethane	710	1.2 U	1.2	0.24	1.4 UJ	1.4	0.29	1.3 UJ	1.3	0.26	1.2 UJ	1.2	0.24	1.3 UJ	1.3	0.27
trans-1,2-Dichloroethene	19,000	1.2 U	1.2	0.31	1.4 U	1.4	0.38	1.3 U	1.3	0.34	1.2 U	1.2	0.32	1.3 U	1.3	0.35
cis-1,2-Dichloroethene	2,600	1.2 U	1.2	0.28	1.4 U	1.4	0.34	1.3 U	1.3	0.31	1.2 U	1.2	0.29	1.3 U	1.3	0.32
Chloroform	200	1.2 U	1.2	0.28	1.4 U	1.4	0.34	1.3 U	1.3	0.30	1.2 U	1.2	0.28	1.3 U	1.3	0.31
1,2-Dichloroethane	70	1.2 U	1.2	0.23	1.4 U	1.4	0.27	1.3 U	1.3	0.24	1.2 U	1.2	0.23	1.3 U	1.3	0.25
2-Butanone	430,000	5.9 U	5.9	0.60	7.2 U	7.2	0.73	6.4 U	6.4	0.66	5.9 U	5.9	0.61	6.6 U	6.6	0.68
1,1,1-Trichloroethane	1,900,000	1.2 U	1.2	0.27	1.4 U	1.4	0.32	1.3 U	1.3	0.29	1.2 U	1.2	0.27	1.3 U	1.3	0.30
Carbon Tetrachloride	21	1.2 U	1.2	0.25	1.4 U	1.4	0.31	1.3 U	1.3	0.27	1.2 U	1.2	0.25	1.3 U	1.3	0.28
Vinyl Acetate	---	5.9 U	5.9	0.45	7.2 U	7.2	0.55	6.4 U	6.4	0.49	5.9 U	5.9	0.45	6.6 U	6.6	0.51
Bromodichloromethane	89	1.2 U	1.2	0.30	1.4 U	1.4	0.36	1.3 U	1.3	0.33	1.2 U	1.2	0.30	1.3 U	1.3	0.34
1,2-Dichloropropane	92	1.2 U	1.2	0.19	1.4 U	1.4	0.23	1.3 U	1.3	0.21	1.2 U	1.2	0.19	1.3 U	1.3	0.21
cis-1,3-Dichloropropene	---	1.2 U	1.2	0.27	1.4 U	1.4	0.32	1.3 U	1.3	0.29	1.2 U	1.2	0.27	1.3 U	1.3	0.30
Trichloroethene	51	1.2 U	1.2	0.25	**1.0** J1	1.4	0.30	1.3 U	1.3	0.27	**1.2** J1	1.2	0.25	**2.0**	1.3	0.28
Dibromochloromethane	---	1.2 U	1.2	0.31	1.4 U	1.4	0.38	1.3 U	1.3	0.34	1.2 U	1.2	0.32	1.3 U	1.3	0.35
1,1,2-Trichloroethane	73	1.2 U	1.2	0.34	1.4 U	1.4	0.41	1.3 U	1.3	0.37	1.2 U	1.2	0.34	1.3 U	1.3	0.38
Benzene	93	1.2 U	1.2	0.35	1.4 U	1.4	0.42	1.3 U	1.3	0.38	1.2 U	1.2	0.35	1.3 U	1.3	0.39
trans-1,3-Dichloropropene	---	1.2 U	1.2	0.25	1.4 U	1.4	0.31	1.3 U	1.3	0.28	1.2 U	1.2	0.26	1.3 U	1.3	0.29
2-Chloroethylvinylether	---	5.9 U	5.9	0.33	7.2 U	7.2	0.40	6.4 U	6.4	0.35	5.9 U	5.9	0.33	6.6 U	6.6	0.37
Bromoform	---	1.2 U	1.2	0.35	1.4 U	1.4	0.43	1.3 U	1.3	0.38	1.2 U	1.2	0.35	1.3 U	1.3	0.39
4-Methyl-2-Pentanone (MIBK)	170,000	5.9 U	5.9	0.50	7.2 U	7.2	0.60	6.4 U	6.4	0.54	5.9 U	5.9	0.50	6.6 U	6.6	0.56
2-Hexanone	32,000	5.9 U	5.9	0.52	7.2 U	7.2	0.63	6.4 U	6.4	0.56	5.9 U	5.9	0.52	6.6 U	6.6	0.58
Tetrachloroethene	260	1.2 U	1.2	0.30	1.4 U	1.4	0.37	1.3 U	1.3	0.33	1.2 U	1.2	0.31	1.3 U	1.3	0.34
1,1,2,2-Tetrachloroethane	13	1.2 U	1.2	0.30	1.4 U	1.4	0.36	1.3 U	1.3	0.32	1.2 U	1.2	0.30	1.3 U	1.3	0.34
Toluene	100,000	1.2 U	1.2	0.18	1.4 U	1.4	0.22	1.3 U	1.3	0.19	1.2 U	1.2	0.18	1.3 U	1.3	0.20
Chlorobenzene	26,000	1.2 U	1.2	0.26	1.4 U	1.4	0.31	1.3 U	1.3	0.28	1.2 U	1.2	0.26	1.3 U	1.3	0.29
Ethylbenzene	230	1.2 U	1.2	0.24	1.4 U	1.4	0.29	1.3 U	1.3	0.26	1.2 U	1.2	0.24	1.3 U	1.3	0.27
Styrene	16,000,000	1.2 U	1.2	0.16	1.4 U	1.4	0.20	1.3 U	1.3	0.18	1.2 U	1.2	0.16	1.3 U	1.3	0.18
Trichlorofluoromethane	200,000	1.2 U	1.2	0.31	1.4 U	1.4	0.38	**2.4** J	1.3	0.34	**1.9** J	1.2	0.32	**5.9** J	1.3	0.35
1,1,2-Trichloro-1,2,2-trifuoroethane	1,000,000,000	2.4 U	2.4	0.34	2.9 U	2.9	0.41	2.6 U	2.6	0.37	2.4 U	2.4	0.34	2.7 U	2.7	0.38
m,p-Xylene	160,000	1.2 U	1.2	0.46	1.4 U	1.4	0.56	1.3 U	1.3	0.50	1.2 U	1.2	0.47	1.3 U	1.3	0.52
o-Xylene	200,000	1.2 U	1.2	0.26	1.4 U	1.4	0.32	1.3 U	1.3	0.29	1.2 U	1.2	0.27	1.3 U	1.3	0.30
1,2-Dichlorobenzene	68,000	1.2 U	1.2	0.35	1.4 U	1.4	0.42	1.3 U	1.3	0.38	1.2 U	1.2	0.35	1.3 U	1.3	0.39
1,3-Dichlorobenzene	3,840	1.2 U	1.2	0.27	1.4 U	1.4	0.33	1.3 U	1.3	0.29	1.2 U	1.2	0.27	1.3 U	1.3	0.30
1,4-Dichlorobenzene	3,500	1.2 U	1.2	0.27	1.4 U	1.4	0.33	1.3 U	1.3	0.30	1.2 U	1.2	0.28	1.3 U	1.3	0.31
Acrolein	---	59 UJ	59	4.5	72 UJ	72	5.5	64 UJ	64	4.9	59 UJ	59	4.5	66 UJ	66	5.1
Methyl Iodide	---	1.2 U	1.2	0.25	1.4 U	1.4	0.31	**0.7** J1	1.3	0.28	1.2 U	1.2	0.26	1.3 U	1.3	0.29
Bromoethane	---	2.4 U	2.4	0.52	2.9 U	2.9	0.63	2.6 U	2.6	0.56	2.4 U	2.4	0.52	2.7 U	2.7	0.58
Acrylonitrile	---	5.9 U	5.9	1.2	7.2 U	7.2	1.5	6.4 U	6.4	1.3	5.9 U	5.9	1.2	6.6 U	6.6	1.4
1,1-Dichloropropene	---	1.2 U	1.2	0.37	1.4 U	1.4	0.45	1.3 U	1.3	0.4	1.2 U	1.2	0.37	1.3 U	1.3	0.41
Dibromomethane	---	1.2 U	1.2	0.17	1.4 U	1.4	0.21	1.3 U	1.3	0.19	1.2 U	1.2	0.18	1.3 U	1.3	0.19
1,1,1,2-Tetrachloroethane	---	1.2 U	1.2	0.27	1.4 U	1.4	0.33	1.3 U	1.3	0.30	1.2 U	1.2	0.28	1.3 U	1.3	0.31
1,2-Dibromo-3-chloropropane	---	5.9 U	5.9	0.69	7.2 U	7.2	0.84	6.4 U	6.4	0.75	5.9 U	5.9	0.70	6.6 U	6.6	0.78
1,2,3-Trichloropropane	---	2.4 U	2.4	0.61	2.9 U	2.9	0.74	2.6 U	2.6	0.66	2.4 U	2.4	0.62	2.7 U	2.7	0.69
trans-1,4-Dichloro-2-butene	---	5.9 U	5.9	0.52	7.2 U	7.2	0.63	6.4 U	6.4	0.56	5.9 U	5.9	0.52	6.6 U	6.6	0.58
1,3,5-Trimethylbenzene	800,000	1.2 U	1.2	0.30	1.4 U	1.4	0.36	1.3 U	1.3	0.33	1.2 U	1.2	0.30	1.3 U	1.3	0.34
1,2,4-Trimethylbenzene	800,000	1.2 U	1.2	0.27	1.4 U	1.4	0.33	1.3 U	1.3	0.29	1.2 U	1.2	0.27	1.3 U	1.3	0.31
Hexachlorobutadiene	---	5.9 U	5.9	0.48	7.2 U	7.2	0.59	6.4 U	6.4	0.53	5.9 U	5.9	0.49	6.6 U	6.6	0.54
Ethylene Dibromide	---	1.2 U	1.2	0.21	1.4 U	1.4	0.25	1.3 U	1.3	0.23	1.2 U	1.2	0.21	1.3 U	1.3	0.23
Bromochloromethane	---	1.2 U	1.2	0.38	1.4 U	1.4	0.46	1.3 U	1.3	0.41	1.2 U	1.2	0.38	1.3 U	1.3	0.43

TABLE M-2
DIRECT-PUSH SOIL BORINGS SOIL ANALYTICAL RESULTS
BOEING ISAACSON-THOMPSON
REMEDIAL INVESTIGATION

	Preliminary Cleanup Level	IT-SB-7(13-14.5) TU90O 11/01/2011			IT-SB-8(2-3.5) TX01F 11/14/2011			IT-SB-8(5-6.5) TX01G 11/14/2011			IT-SB-8(8-9.5) TX01H 11/14/2011			IT-SB-8(14-15.5) TX01I 11/14/2011		
		Result	Reporting Limit	Detection Limit	Result	Reporting Limit	Detection Limit	Result	Reporting Limit	Detection Limit	Result	Reporting Limit	Detection Limit	Result	Reporting Limit	Detection Limit
2,2-Dichloropropane	---	1.2 U	1.2	0.34	1.4 U	1.4	0.42	1.3 U	1.3	0.37	1.2 U	1.2	0.35	1.3 U	1.3	0.39
1,3-Dichloropropane	---	1.2 U	1.2	0.25	1.4 U	1.4	0.30	1.3 U	1.3	0.27	1.2 U	1.2	0.25	1.3 U	1.3	0.28
Isopropylbenzene	78,000	1.2 U	1.2	0.27	1.4 U	1.4	0.33	1.3 U	1.3	0.30	1.2 U	1.2	0.28	1.3 U	1.3	0.31
n-Propylbenzene	11,000	1.2 U	1.2	0.32	1.4 U	1.4	0.39	1.3 U	1.3	0.35	1.2 U	1.2	0.32	1.3 U	1.3	0.36
Bromobenzene	---	1.2 U	1.2	0.18	1.4 U	1.4	0.22	1.3 U	1.3	0.20	1.2 U	1.2	0.18	1.3 U	1.3	0.20
2-Chlorotoluene	---	1.2 U	1.2	0.35	1.4 U	1.4	0.43	1.3 U	1.3	0.38	1.2 U	1.2	0.36	1.3 U	1.3	0.40
4-Chlorotoluene	400,000	1.2 U	1.2	0.33	1.4 U	1.4	0.40	1.3 U	1.3	0.36	1.2 U	1.2	0.33	1.3 U	1.3	0.37
tert-Butylbenzene	---	1.2 U	1.2	0.36	1.4 U	1.4	0.44	1.3 U	1.3	0.39	1.2 U	1.2	0.36	1.3 U	1.3	0.41
sec-Butylbenzene	---	1.2 U	1.2	0.28	1.4 U	1.4	0.34	1.3 U	1.3	0.31	1.2 U	1.2	0.29	1.3 U	1.3	0.32
4-Isopropyltoluene	---	1.2 U	1.2	0.28	1.4 U	1.4	0.34	1.3 U	1.3	0.30	1.2 U	1.2	0.28	1.3 U	1.3	0.31
n-Butylbenzene	27,000	1.2 U	1.2	0.31	1.4 U	1.4	0.38	1.3 U	1.3	0.34	1.2 U	1.2	0.31	1.3 U	1.3	0.35
1,2,4-Trichlorobenzene	80	5.9 U	5.9	0.39	7.2 U	7.2	0.48	6.4 U	6.4	0.43	5.9 U	5.9	0.40	6.6 U	6.6	0.44
Naphthalene	2,100	5.9 U	5.9	0.51	7.2 U	7.2	0.61	6.4 U	6.4	0.55	5.9 U	5.9	0.51	6.6 U	6.6	0.57
1,2,3-Trichlorobenzene	---	5.9 U	5.9	0.36	7.2 U	7.2	0.44	6.4 U	6.4	0.39	5.9 U	5.9	0.36	6.6 U	6.6	0.40
SEMIVOLATILES (µg/kg)																
Method SW8270D																
Phenol	1,900,000	19 U	19	8.1	19 U	19	8.1	18 U	18	7.6	**280**	18	7.9	19 U	19	8.1
Bis-(2-Chloroethyl) Ether	---	19 U	19	3.1	19 U	19	3.1	18 U	18	3.0	18 U	18	3.1	19 U	19	3.1
2-Chlorophenol	---	19 U	19	2.2	19 U	19	2.2	18 U	18	2.1	18 U	18	2.2	19 U	19	2.2
1,3-Dichlorobenzene	3,840	19 U	19	2.5	19 U	19	2.5	18 U	18	2.3	18 U	18	2.4	19 U	19	2.5
1,4-Dichlorobenzene	3,500	19 U	19	2.7	19 U	19	2.7	18 U	18	2.5	18 U	18	2.6	19 U	19	2.7
Benzyl Alcohol	8,000,000	19 U	19	5.7	19 U	19	5.7	18 U	18	5.4	18 U	18	5.6	19 UJ	19	5.7
1,2-Dichlorobenzene	68,000	19 U	19	2.3	19 U	19	2.3	18 U	18	2.2	18 U	18	2.3	19 U	19	2.3
2-Methylphenol	250,000	19 U	19	4.9	19 U	19	4.9	18 U	18	4.6	18 U	18	4.8	19 U	19	4.9
2,2'-Oxybis(1-Chloropropane)	---	19 U	19	3.5	19 U	19	3.5	18 U	18	3.3	18 U	18	3.4	19 U	19	3.5
4-Methylphenol	41,000	38 U	38	6.2	38 U	38	6.2	35 U	35	5.8	**20** J1	37	6.1	37 U	37	6.2
N-Nitroso-Di-N-Propylamine	---	19 U	19	3.1	19 U	19	3.2	18 U	18	3.0	18 U	18	3.1	19 U	19	3.1
Hexachloroethane	---	19 U	19	2.8	19 U	19	2.8	18 U	18	2.6	18 U	18	2.7	19 U	19	2.7
Nitrobenzene	---	19 U	19	3.8	19 U	19	3.8	18 U	18	3.6	18 U	18	3.7	19 U	19	3.8
Isophorone	---	19 U	19	2.7	19 U	19	2.7	18 U	18	2.5	18 U	18	2.6	19 U	19	2.7
2-Nitrophenol	---	94 U	94	36	94 U	94	36	88 U	88	34	92 U	92	35	93 U	93	36
2,4-Dimethylphenol	95,000	38 UJ	38	3.2	38 U	38	3.2	35 U	35	3.0	37 U	37	3.2	37 U	37	3.2
Benzoic Acid	9,000	380 UJ	380	95	380 U	380	95	350 U	350	89	370 U	370	92	370 U	370	94
bis(2-Chloroethoxy) Methane	---	19 U	19	1.9	19 U	19	1.9	18 U	18	1.8	18 U	18	1.8	19 U	19	1.9
2,4-Dichlorophenol	---	190 U	190	20	190 U	190	20	180 U	180	19	180 U	180	20	190 U	190	20
1,2,4-Trichlorobenzene	80	19 U	19	3.3	19 U	19	3.3	18 U	18	3.1	18 U	18	3.2	19 U	19	3.2
Naphthalene	2,100	19 U	19	2.6	19 U	19	2.6	18 U	18	2.4	18 U	18	2.5	19 U	19	2.6
4-Chloroaniline	---	250 U	250	21	250 U	250	21	240 U	240	20	250 U	250	20	250 U	250	21
Hexachlorobutadiene	---	94 U	94	4.3	94 U	94	4.3	88 U	88	4.0	92 U	92	4.2	93 U	93	4.3
4-Chloro-3-methylphenol	740,000	94 U	94	14	94 U	94	14	88 U	88	13	92 U	92	14	93 U	93	14
2-Methylnaphthalene	320,000	19 U	19	2.9	19 U	19	2.9	18 U	18	2.7	18 U	18	2.8	19 U	19	2.9
Hexachlorocyclopentadiene	---	380 UJ	380	62	380 U	380	62	350 U	350	59	370 U	370	61	370 U	370	62
2,4,6-Trichlorophenol	---	94 U	94	21	94 U	94	21	88 U	88	20	92 U	92	20	93 U	93	21
2,4,5-Trichlorophenol	---	94 U	94	20	94 U	94	20	88 U	88	19	92 U	92	20	93 U	93	20
2-Chloronaphthalene	---	19 U	19	2.5	19 U	19	2.5	18 U	18	2.3	18 U	18	2.4	19 U	19	2.5
2-Nitroaniline	---	94 U	94	17	94 U	94	17	88 U	88	16	92 U	92	17	93 U	93	17
Dimethylphthalate	71	19 U	19	2.7	19 U	19	2.7	18 U	18	2.6	18 U	18	2.7	19 U	19	2.7
Acenaphthylene	---	19 U	19	5.4	**16** J1	19	5.4	18 U	18	5.0	18 U	18	5.2	19 U	19	5.3
3-Nitroaniline	---	94 U	94	21	94 U	94	21	88 U	88	20	92 U	92	21	93 U	93	21
Acenaphthene	230,000	19 U	19	3.1	19 U	19	3.1	18 U	18	2.9	18 U	18	3.0	19 U	19	3.1
2,4-Dinitrophenol	---	800 U	800	100	800 U	800	100	750 U	750	98	780 U	780	100	790 UJ	790	100
4-Nitrophenol	---	94 U	94	33	94 U	94	33	88 U	88	31	92 U	92	32	93 U	93	32
Dibenzofuran	80,000	19 U	19	3.8	19 U	19	3.8	18 U	18	3.6	18 U	18	3.8	19 U	19	3.8
2,6-Dinitrotoluene	---	94 U	94	29	94 U	94	29	88 U	88	27	92 U	92	28	93 U	93	29
2,4-Dinitrotoluene	---	94 U	94	18	94 U	94	18	88 U	88	17	92 U	92	18	93 U	93	18
Diethylphthalate	178,000	47 U	47	34	47 U	47	34	44 U	44	32	46 U	46	33	47 U	47	34
4-Chlorophenyl-phenylether	---	19 U	19	5.0	19 U	19	5.0	18 U	18	4.7	18 U	18	4.8	19 U	19	4.9
Fluorene	150,000	19 U	19	4.1	19 U	19	4.1	18 U	18	3.8	18 U	18	4.0	19 U	19	4.1
4-Nitroaniline	---	94 U	94	36	94 U	94	36	88 U	88	33	92 U	92	35	93 U	93	35

TABLE M-2
DIRECT-PUSH SOIL BORINGS SOIL ANALYTICAL RESULTS
BOEING ISAACSON-THOMPSON
REMEDIAL INVESTIGATION

	Preliminary Cleanup Level	IT-SB-7(13-14.5) TU90O 11/01/2011			IT-SB-8(2-3.5) TX01F 11/14/2011			IT-SB-8(5-6.5) TX01G 11/14/2011			IT-SB-8(8-9.5) TX01H 11/14/2011			IT-SB-8(14-15.5) TX01I 11/14/2011		
		Result	Reporting Limit	Detection Limit	Result	Reporting Limit	Detection Limit	Result	Reporting Limit	Detection Limit	Result	Reporting Limit	Detection Limit	Result	Reporting Limit	Detection Limit
4,6-Dinitro-2-Methylphenol	---	190 U	190	20	190 U	190	20	180 U	180	19	180 U	180	19	190 U	190	20
N-Nitrosodiphenylamine	204,000	19 U	19	5.1	19 U	19	5.1	18 U	18	4.7	18 U	18	4.9	19 U	19	5.0
4-Bromophenyl-phenylether	---	19 U	19	4.7	19 U	19	4.7	18 U	18	4.4	18 U	18	4.6	19 U	19	4.7
Hexachlorobenzene	---	19 U	19	4.0	19 U	19	4.0	18 U	18	3.8	18 U	18	3.9	19 U	19	4.0
Pentachlorophenol	---	190 U	190	45	190 UJ	190	45	180 UJ	180	43	180 UJ	180	44	190 U	190	45
Phenanthrene	---	19 U	19	3.4	**98**	19	3.4	**28**	18	3.2	**13** J1	18	3.3	19 U	19	3.4
Carbazole	50,000	19 U	19	2.5	19 U	19	2.5	18 U	18	2.4	18 U	18	2.5	19 U	19	2.5
Anthracene	1,600,000	19 U	19	4.2	19 U	19	4.2	18 U	18	4.0	18 U	18	4.1	19 U	19	4.2
Di-n-Butylphthalate	26,000	19 U	19	7.6	**52**	19	7.7	18 U	18	7.2	18 U	18	7.5	19 U	19	7.6
Fluoranthene	230,000	19 U	19	2.7	**110**	19	2.7	**14** J1	18	2.6	18 U	18	2.7	19 U	19	2.7
Pyrene	240,000	19 U	19	1.8	**120**	19	1.8	**22**	18	1.7	18 U	18	1.8	19 U	19	1.8
Butylbenzylphthalate	1,700	19 U	19	5.8	19 U	19	5.8	18 U	18	5.4	18 U	18	5.6	19 U	19	5.7
3,3'-Dichlorobenzidine	---	140 UJ	140	17	140 U	140	17	130 U	130	16	140 U	140	16	140 UJ	140	17
Benzo(a)anthracene	---	19 U	19	3.1	**40**	19	3.1	**12** J1	18	2.9	18 U	18	3.0	19 U	19	3.1
bis(2-Ethylhexyl)phthalate	56,600	24 U	23	14	24 U	24	14	**15** J1	18	13	**58**	23	13	**17** J1	23	14
Chrysene	---	19 U	19	3.5	**74**	19	3.5	**35**	18	3.3	18 U	18	3.4	19 U	19	3.5
Di-n-Octyl phthalate	---	19 U	19	5.5	19 U	19	5.5	18 U	18	5.1	18 U	18	5.3	19 U	19	5.5
Benzo(a)pyrene	---	19 U	19	5.1	**96**	19	5.1	**16** J1	18	4.8	18 U	18	5.0	19 U	19	5.1
Indeno(1,2,3-cd)pyrene	---	19 U	19	4.4	**130**	19	4.4	18 U	18	4.1	18 U	18	4.3	19 U	19	4.4
Dibenz(a,h)anthracene	---	19 U	19	4.0	**19**	19	4.0	18 U	18	3.8	18 U	18	3.9	19 U	19	4.0
Benzo(g,h,i)perylene	---	19 U	19	4.1	**280**	19	4.1	**26**	18	3.9	18 U	18	4.0	19 U	19	4.1
1-Methylnaphthalene	16,000	19 U	19	2.5	19 U	19	2.5	18 U	18	2.4	18 U	18	2.5	19 U	19	2.5
Total Benzofluoranthenes	---	19 U	19	2.6	**150**	19	2.6	**26**	18	2.4	**9.2** J1	18	2.5	19 U	19	2.6
cPAH TEQ	15	ND	NA	NA	**131**	NA	NA	**20** J	NA	NA	**0.92** J	NA	NA	ND	NA	NA
PAHs (µg/kg)																
Method SW8270D-SIM																
Naphthalene	2,100	**2.7** J1	4.5	2.4	**210**	4.6	2.4	**9.2**	4.5	2.4	4.5 U	4.5	2.4	4.6 U	4.6	2.4
2-Methylnaphthalene	320,000	**2.4** J1	4.5	1.4	**180**	4.6	1.4	**13**	4.5	1.4	4.5 U	4.5	1.4	**2.6** J1	4.6	1.4
1-Methylnaphthalene	16,000	4.5 U	4.5	1.6	**220**	4.6	1.6	**9.2**	4.5	1.5	4.5 U	4.5	1.5	4.6 U	4.6	1.6
Total Naphthalenes	---	**5.1** J1	NA	NA	**610**	NA	NA	**31.4**	NA	NA	4.5 U	NA	NA	**2.6** J1	NA	NA
Acenaphthylene	---	4.5 U	4.5	1.1	**620**	46	12	**6.2**	4.5	1.1	4.5 U	4.5	1.1	4.6 U	4.6	1.2
Acenaphthene	230,000	4.5 U	4.5	1.2	**110**	4.6	1.2	**8.4**	4.5	1.2	4.5 U	4.5	1.2	4.6 U	4.6	1.2
Fluorene	150,000	4.5 U	4.5	1.2	**560**	46	12	**3.7** J1	4.5	1.2	4.5 U	4.5	1.2	4.6 U	4.6	1.2
Phenanthrene	---	**4.8**	4.5	1.8	**5700**	93	37	**86**	4.5	1.8	4.5 U	4.5	1.8	**4.2** J1	4.6	1.8
Anthracene	1,600,000	4.5 U	4.5	1.3	**370**	4.6	1.4	**8.8**	4.5	1.3	4.5 U	4.5	1.3	4.6 U	4.6	1.4
Fluoranthene	230,000	4.5 U	4.5	1.6	**4900**	93	33	**60**	4.5	1.6	4.5 U	4.5	1.6	**3.4** J1	4.6	1.6
Pyrene	240,000	4.5 U	4.5	2.0	**4700**	93	41	**63**	4.5	2.0	4.5 U	4.5	2.0	**3.5** J1	4.6	2.1
Benzo(a)anthracene	---	4.5 U	4.5	1.5	**1400**	46	15	**28**	4.5	1.4	4.5 U	4.5	1.4	**2.4** J1	4.6	1.5
Chrysene	---	4.5 U	4.5	1.7	**2000**	46	17	**51**	4.5	1.7	4.5 U	4.5	1.7	**3.3** J1	4.6	1.7
Benzo(a)pyrene	---	4.5 U	4.5	1.6	**1900**	46	16	**37**	4.5	1.6	4.5 U	4.5	1.6	4.6 U	4.6	1.6
Indeno(1,2,3-cd)pyrene	---	4.5 U	4.5	3.1	**1100**	46	32	**40**	4.5	3.1	4.5 U	4.5	3.1	4.6 U	4.6	3.2
Dibenz(a,h)anthracene	---	4.5 U	4.5	2.2	**300**	4.6	2.2	**11**	4.5	2.1	4.5 U	4.5	2.2	4.6 U	4.6	2.2
Benzo(g,h,i)perylene	---	4.5 U	4.5	2.8	**1400**	46	28	**82**	4.5	2.7	4.5 U	4.5	2.8	4.6 U	4.6	2.8
Dibenzofuran	80,000	4.5 U	4.5	1.4	**270**	4.6	1.4	**3.8** J1	4.5	1.4	4.5 U	4.5	1.4	4.6 U	4.6	1.4
Total Benzofluoranthenes	---	4.5 U	4.5	1.7	**2800**	46	17	**51**	4.5	1.7	4.5 U	4.5	1.7	4.6 U	4.6	1.7
cPAH TEQ	15	ND	NA	NA	**2480**	NA	NA	**51**	NA	NA	ND	NA	NA	**0.3** J	NA	NA

TABLE M-2
DIRECT-PUSH SOIL BORINGS SOIL ANALYTICAL RESULTS
BOEING ISAACSON-THOMPSON
REMEDIAL INVESTIGATION

	Preliminary Cleanup Level	IT-SB-7(13-14.5) TU90O 11/01/2011			IT-SB-8(2-3.5) TX01F 11/14/2011			IT-SB-8(5-6.5) TX01G 11/14/2011			IT-SB-8(8-9.5) TX01H 11/14/2011			IT-SB-8(14-15.5) TX01I 11/14/2011		
		Result	Reporting Limit	Detection Limit	Result	Reporting Limit	Detection Limit	Result	Reporting Limit	Detection Limit	Result	Reporting Limit	Detection Limit	Result	Reporting Limit	Detection Limit
PCBs (µg/kg)																
Method SW8082																
Aroclor 1016	0.72	33 U	33	2.0	31 U	31	1.9	31 U	31	1.9	32 U	32	2.0	31 U	31	1.9
Aroclor 1242	0.72	33 U	33	2.4	31 U	31	2.3	31 U	31	2.3	32 U	32	2.4	31 U	31	2.3
Aroclor 1248	220	33 U	33	2.4	31 U	31	2.3	31 U	31	2.3	32 U	32	2.4	31 U	31	2.3
Aroclor 1254	0.29	33 U	33	2.4	31 U	31	2.3	31 U	31	2.3	32 U	32	2.4	31 U	31	2.3
Aroclor 1260	5.4	33 U	33	2.4	31 U	31	2.3	31 U	31	2.3	32 U	32	2.4	31 U	31	2.3
Aroclor 1221	---	33 U	33	2.4	31 U	31	2.3	31 U	31	2.3	32 U	32	2.4	31 U	31	2.3
Aroclor 1232	---	33 U	33	2.4	31 U	31	2.3	31 U	31	2.3	32 U	32	2.4	31 U	31	2.3
Total PCBs	1.8	ND	NA	NA	ND	NA	NA	ND	NA	NA	ND	NA	NA	ND	NA	NA
TOTAL PETROLEUM HYDROCARBONS (mg/kg)																
NWTPH-Dx																
Diesel-Range Organics	2,000	6.6 U	6.6	1.7	**13**	6.0	1.5	**23**	5.6	1.4	5.7 U	5.7	1.5	6.4 U	6.4	1.6
Oil-Range Organics	2,000	13 U	13	2.1	**34**	12	1.9	**170**	11	1.8	12 U	12	1.8	13 U	13	2.0
NWTPH-G																
Gasoline-Range Organics	100/30	8.5 U	8.5	4.1	7.2 U	7.2	3.4	**20**	8.0	3.8	6.7 U	6.7	3.2	8.0 U	8.0	3.8
TOTAL METALS (mg/kg)																
Methods 200.8/7471A/SW7196A																
Antimony	5	0.3 U	0.3	0.017	0.2 U	0.2	0.015	0.2 U	0.2	0.014	0.2 U	0.2	0.014	0.2 U	0.2	0.016
Arsenic	7	**4.0**	0.3	0.11	**7.9**	0.2	0.097	**3.9**	0.2	0.091	**3.1**	0.2	0.096	**2.4**	0.2	0.11
Barium	640	**60.7**	0.7	0.073	**104**	0.6	0.063	**46.1**	0.5	0.059	**41.6**	0.6	0.062	**46.5**	0.6	0.068
Beryllium	160	0.3 U	0.3	0.024	**0.2**	0.2	0.020	0.2 U	0.2	0.019	0.2 U	0.2	0.020	0.2 U	0.2	0.022
Cadmium	1.3	0.1 U	0.1	0.016	**0.3**	0.1	0.013	0.1 U	0.1	0.013	0.1 U	0.1	0.013	0.1 U	0.1	0.015
Chromium	1,480	**16.2**	0.7	0.050	**18.6**	0.6	0.043	**12.8**	0.5	0.040	**12.7**	0.6	0.042	**15.5**	0.6	0.046
Chromium VI	3.8	0.530 U	0.530	0.030	0.467 U	0.467	0.030	0.448 U	0.448	0.030	0.449 U	0.449	0.030	0.501 U	0.501	0.030
Copper	36	**17.5**	0.7	0.047	**30.0**	0.6	0.040	**17.4**	0.5	0.038	**12.1**	0.6	0.040	**16.7**	0.6	0.044
Lead	250	**2.7**	0.1	0.062	**153**	0.1	0.053	**5.1**	0.1	0.049	**6.2**	0.1	0.052	**2.1**	0.1	0.057
Mercury	1.5	**0.03**	0.02	0.0012	**0.09**	0.02	0.0011	**0.03**	0.02	0.0012	0.02 U	0.02	0.0012	**0.03**	0.02	0.0013
Nickel	210	**11.8**	0.7	0.064	**12.2**	0.6	0.055	**11.6**	0.5	0.052	**9.3**	0.6	0.054	**8.1**	0.6	0.060
Selenium	1.0	0.7 U	0.7	0.13	0.6 U	0.6	0.11	0.5 U	0.5	0.10	0.6 U	0.6	0.11	0.6 U	0.6	0.12
Silver	170	0.3 U	0.3	0.010	0.3	0.3	0.0090	0.2 U	0.2	0.0084	0.2 U	0.2	0.0088	0.2 U	0.2	0.0097
Thallium	0.67	0.3 U	0.3	0.0039	0.2 U	0.2	0.0034	0.2 U	0.2	0.0032	0.2 U	0.2	0.0033	0.2 U	0.2	0.0036
Zinc	1,400	**52**	5	0.44	**90**	4	0.38	**45**	4	0.36	**101**	4	0.37	**48**	5	0.41

TABLE M-2
DIRECT-PUSH SOIL BORINGS SOIL ANALYTICAL RESULTS
BOEING ISAACSON-THOMPSON
REMEDIAL INVESTIGATION

	Preliminary Cleanup Level	IT-SB-9(2-3.5) TX02E 11/14/2011			IT-SB-9(5-6.5) TX02F 11/14/2011			IT-SB-9(8-8.5) TX02G 11/14/2011			IT-SB-9(14-15.5) TX02H 11/14/2011			IT-SB-10(2-3.5) TU90P 11/01/2011		
		Result	Reporting Limit	Detection Limit	Result	Reporting Limit	Detection Limit	Result	Reporting Limit	Detection Limit	Result	Reporting Limit	Detection Limit	Result	Reporting Limit	Detection Limit
VOLATILES (µg/kg)																
Method SW8260C																
Chloromethane	1,600	1.3 U	1.3	0.33	1.3 U	1.3	0.34	1.3 U	1.3	0.34	1.5 U	1.5	0.38	1.4 UJ	1.4	0.38
Bromomethane	---	1.3 UJ	1.3	0.24	1.3 UJ	1.3	0.24	1.3 UJ	1.3	0.24	1.5 UJ	1.5	0.27	1.4 UJ	1.4	0.27
Vinyl Chloride	7.4	1.3 U	1.3	0.30	1.3 U	1.3	0.30	1.3 U	1.3	0.30	1.5 U	1.5	0.34	1.4 U	1.4	0.34
Chloroethane	280,000	1.3 U	1.3	0.59	1.3 U	1.3	0.60	1.3 U	1.3	0.59	1.5 U	1.5	0.67	1.4 U	1.4	0.66
Methylene Chloride	2400	2.5 U	2.5	0.81	**1.1** J1	2.6	0.82	**1.6** J1	2.6	0.81	**1.4** J1	2.9	0.92	**1.6** J, J1	2.9	0.91
Acetone	510,000	**43** J	6.4	0.61	**58** J	6.5	0.62	**30** J	6.4	0.62	**28** J	7.3	0.70	**43** J	7.2	0.69
Carbon Disulfide	75,000	1.3 U	1.3	0.71	1.3 U	1.3	0.72	1.3 U	1.3	0.72	**2.8**	1.5	0.81	1.4 U	1.4	0.80
1,1-Dichloroethene	81	1.3 U	1.3	0.43	1.3 U	1.3	0.43	1.3 U	1.3	0.43	1.5 U	1.5	0.49	1.4 U	1.4	0.48
1,1-Dichloroethane	710	1.3 U	1.3	0.26	1.3 U	1.3	0.26	1.3 U	1.3	0.26	1.5 U	1.5	0.29	1.4 U	1.4	0.29
trans-1,2-Dichloroethene	19,000	1.3 UJ	1.3	0.34	1.3 UJ	1.3	0.34	1.3 UJ	1.3	0.34	1.5 UJ	1.5	0.39	1.4 U	1.4	0.38
cis-1,2-Dichloroethene	2,600	1.3 U	1.3	0.30	1.3 U	1.3	0.31	1.3 U	1.3	0.31	1.5 U	1.5	0.35	1.4 U	1.4	0.34
Chloroform	200	1.3 U	1.3	0.30	1.3 U	1.3	0.30	1.3 U	1.3	0.30	1.5 U	1.5	0.34	1.4 U	1.4	0.34
1,2-Dichloroethane	70	1.3 U	1.3	0.24	1.3 U	1.3	0.25	1.3 U	1.3	0.24	1.5 U	1.5	0.28	1.4 U	1.4	0.27
2-Butanone	430,000	6.4 U	6.4	0.65	**3.7** J1	6.5	0.66	6.4 U	6.4	0.66	7.3 U	7.3	0.74	7.2 U	7.2	0.73
1,1,1-Trichloroethane	1,900,000	1.3 U	1.3	0.29	1.3 U	1.3	0.29	1.3 U	1.3	0.29	1.5 U	1.5	0.33	1.4 U	1.4	0.32
Carbon Tetrachloride	21	1.3 U	1.3	0.27	1.3 U	1.3	0.28	1.3 U	1.3	0.27	1.5 U	1.5	0.31	1.4 U	1.4	0.31
Vinyl Acetate	---	6.4 U	6.4	0.48	6.5 U	6.5	0.49	6.4 U	6.4	0.49	7.3 U	7.3	0.55	7.2 U	7.2	0.55
Bromodichloromethane	89	1.3 U	1.3	0.32	1.3 U	1.3	0.33	1.3 U	1.3	0.33	1.5 U	1.5	0.37	1.4 U	1.4	0.36
1,2-Dichloropropane	92	1.3 U	1.3	0.21	1.3 U	1.3	0.21	1.3 U	1.3	0.21	1.5 U	1.5	0.23	1.4 U	1.4	0.23
cis-1,3-Dichloropropene	---	1.3 U	1.3	0.29	1.3 U	1.3	0.29	1.3 U	1.3	0.29	1.5 U	1.5	0.33	1.4 U	1.4	0.32
Trichloroethene	51	**0.6** J1	1.3	0.27	**1.3**	1.3	0.27	**2.1**	1.3	0.27	**1.5**	1.5	0.31	1.4 U	1.4	0.30
Dibromochloromethane	---	1.3 U	1.3	0.34	1.3 U	1.3	0.34	1.3 U	1.3	0.34	1.5 U	1.5	0.39	1.4 U	1.4	0.38
1,1,2-Trichloroethane	73	1.3 U	1.3	0.36	1.3 U	1.3	0.37	1.3 U	1.3	0.37	1.5 U	1.5	0.41	1.4 U	1.4	0.41
Benzene	93	1.3 U	1.3	0.38	**0.7** J1	1.3	0.38	1.3 U	1.3	0.38	1.5 U	1.5	0.43	1.4 U	1.4	0.42
trans-1,3-Dichloropropene	---	1.3 U	1.3	0.27	1.3 U	1.3	0.28	1.3 U	1.3	0.28	1.5 U	1.5	0.31	1.4 U	1.4	0.31
2-Chloroethylvinylether	---	6.4 U	6.4	0.35	6.5 U	6.5	0.36	6.4 U	6.4	0.35	7.3 U	7.3	0.40	7.2 U	7.2	0.40
Bromoform	---	1.3 U	1.3	0.38	1.3 U	1.3	0.38	1.3 U	1.3	0.38	1.5 U	1.5	0.43	1.4 U	1.4	0.43
4-Methyl-2-Pentanone (MIBK)	170,000	6.4 U	6.4	0.53	6.5 U	6.5	0.54	6.4 U	6.4	0.54	7.3 U	7.3	0.61	7.2 U	7.2	0.60
2-Hexanone	32,000	6.4 U	6.4	0.56	6.5 U	6.5	0.57	6.4 U	6.4	0.56	7.3 U	7.3	0.64	7.2 U	7.2	0.63
Tetrachloroethene	260	1.3 U	1.3	0.33	1.3 U	1.3	0.33	1.3 U	1.3	0.33	1.5 U	1.5	0.37	1.4 U	1.4	0.37
1,1,2,2-Tetrachloroethane	13	1.3 U	1.3	0.32	1.3 U	1.3	0.33	1.3 U	1.3	0.32	1.5 U	1.5	0.37	1.4 U	1.4	0.36
Toluene	100,000	1.3 U	1.3	0.19	1.3 U	1.3	0.20	1.3 U	1.3	0.19	1.5 U	1.5	0.22	1.4 U	1.4	0.22
Chlorobenzene	26,000	1.3 U	1.3	0.28	1.3 U	1.3	0.28	1.3 U	1.3	0.28	1.5 U	1.5	0.32	1.4 U	1.4	0.31
Ethylbenzene	230	1.3 U	1.3	0.26	1.3 U	1.3	0.26	1.3 U	1.3	0.26	1.5 U	1.5	0.29	1.4 U	1.4	0.29
Styrene	16,000,000	1.3 U	1.3	0.18	1.3 U	1.3	0.18	1.3 U	1.3	0.18	1.5 U	1.5	0.20	1.4 U	1.4	0.20
Trichlorofluoromethane	200,000	**1.0** J1	1.3	0.34	**0.8** J1	1.3	0.34	**1.7**	1.3	0.34	1.5 U	1.5	0.39	1.4 U	1.4	0.38
1,1,2-Trichloro-1,2,2-trifuoroethane	1,000,000,000	2.5 U	2.5	0.36	2.6 U	2.6	0.37	2.6 U	2.6	0.37	2.9 U	2.9	0.42	2.9 U	2.9	0.41
m,p-Xylene	160,000	1.3 U	1.3	0.50	1.3 U	1.3	0.51	1.3 U	1.3	0.50	1.5 U	1.5	0.57	1.4 U	1.4	0.56
o-Xylene	200,000	1.3 U	1.3	0.28	1.3 U	1.3	0.29	1.3 U	1.3	0.29	1.5 U	1.5	0.32	1.4 U	1.4	0.32
1,2-Dichlorobenzene	68,000	1.3 U	1.3	0.37	1.3 U	1.3	0.38	1.3 U	1.3	0.38	1.5 U	1.5	0.42	1.4 U	1.4	0.42
1,3-Dichlorobenzene	3,840	1.3 U	1.3	0.29	1.3 U	1.3	0.29	1.3 U	1.3	0.29	1.5 U	1.5	0.33	1.4 U	1.4	0.33
1,4-Dichlorobenzene	3,500	1.3 U	1.3	0.29	1.3 U	1.3	0.30	1.3 U	1.3	0.30	1.5 U	1.5	0.34	1.4 U	1.4	0.33
Acrolein	---	64 UJ	64	4.8	65 UJ	65	4.9	64 UJ	64	4.9	73 UJ	73	5.5	72 UJ	72	5.5
Methyl Iodide	---	1.3 U	1.3	0.27	1.3 U	1.3	0.28	1.3 U	1.3	0.28	1.5 U	1.5	0.31	1.4 U	1.4	0.31
Bromoethane	---	2.5 U	2.5	0.56	2.6 U	2.6	0.57	2.6 U	2.6	0.56	2.9 U	2.9	0.64	2.9 U	2.9	0.63
Acrylonitrile	---	6.4 U	6.4	1.3	6.5 U	6.5	1.3	6.4 U	6.4	1.3	7.3 U	7.3	1.5	7.2 U	7.2	1.5
1,1-Dichloropropene	---	1.3 U	1.3	0.40	1.3 U	1.3	0.40	1.3 U	1.3	0.40	1.5 U	1.5	0.45	1.4 U	1.4	0.45
Dibromomethane	---	1.3 U	1.3	0.19	1.3 U	1.3	0.19	1.3 U	1.3	0.19	1.5 U	1.5	0.21	1.4 U	1.4	0.21
1,1,1,2-Tetrachloroethane	---	1.3 U	1.3	0.30	1.3 U	1.3	0.30	1.3 U	1.3	0.30	1.5 U	1.5	0.34	1.4 U	1.4	0.33
1,2-Dibromo-3-chloropropane	---	6.4 U	6.4	0.74	6.5 U	6.5	0.76	6.4 U	6.4	0.75	7.3 U	7.3	0.85	7.2 U	7.2	0.84
1,2,3-Trichloropropane	---	2.5 U	2.5	0.66	2.6 U	2.6	0.67	2.6 U	2.6	0.66	2.9 U	2.9	0.75	2.9 U	2.9	0.74
trans-1,4-Dichloro-2-butene	---	6.4 U	6.4	0.55	6.5 U	6.5	0.56	6.4 U	6.4	0.56	7.3 U	7.3	0.63	7.2 U	7.2	0.63
1,3,5-Trimethylbenzene	800,000	1.3 U	1.3	0.32	1.3 U	1.3	0.33	1.3 U	1.3	0.33	1.5 U	1.5	0.37	1.4 U	1.4	0.36
1,2,4-Trimethylbenzene	800,000	1.3 U	1.3	0.29	1.3 U	1.3	0.30	1.3 U	1.3	0.29	1.5 U	1.5	0.33	1.4 U	1.4	0.33
Hexachlorobutadiene	---	6.4 U	6.4	0.52	6.5 U	6.5	0.53	6.4 U	6.4	0.53	7.3 U	7.3	0.59	7.2 U	7.2	0.59
Ethylene Dibromide	---	1.3 U	1.3	0.22	1.3 U	1.3	0.23	1.3 U	1.3	0.23	1.5 U	1.5	0.26	1.4 U	1.4	0.25
Bromochloromethane	---	1.3 UJ	1.3	0.41	1.3 UJ	1.3	0.42	1.3 UJ	1.3	0.41	1.5 UJ	1.5	0.47	1.4 U	1.4	0.46

TABLE M-2
DIRECT-PUSH SOIL BORINGS SOIL ANALYTICAL RESULTS
BOEING ISAACSON-THOMPSON
REMEDIAL INVESTIGATION

	Preliminary Cleanup Level	IT-SB-9(2-3.5) TX02E 11/14/2011			IT-SB-9(5-6.5) TX02F 11/14/2011			IT-SB-9(8-8.5) TX02G 11/14/2011			IT-SB-9(14-15.5) TX02H 11/14/2011			IT-SB-10(2-3.5) TU90P 11/01/2011		
		Result	Reporting Limit	Detection Limit	Result	Reporting Limit	Detection Limit	Result	Reporting Limit	Detection Limit	Result	Reporting Limit	Detection Limit	Result	Reporting Limit	Detection Limit
2,2-Dichloropropane	---	1.3 U	1.3	0.37	1.3 U	1.3	0.38	1.3 U	1.3	0.37	1.5 U	1.5	0.42	1.4 U	1.4	0.42
1,3-Dichloropropane	---	1.3 U	1.3	0.27	1.3 U	1.3	0.27	1.3 U	1.3	0.27	1.5 U	1.5	0.30	1.4 U	1.4	0.30
Isopropylbenzene	78,000	1.3 U	1.3	0.30	1.3 U	1.3	0.30	1.3 U	1.3	0.30	1.5 U	1.5	0.34	1.4 U	1.4	0.33
n-Propylbenzene	11,000	1.3 U	1.3	0.35	1.3 U	1.3	0.35	1.3 U	1.3	0.35	1.5 U	1.5	0.39	1.4 U	1.4	0.39
Bromobenzene	---	1.3 U	1.3	0.19	1.3 U	1.3	0.20	1.3 U	1.3	0.20	1.5 U	1.5	0.22	1.4 U	1.4	0.22
2-Chlorotoluene	---	1.3 U	1.3	0.38	1.3 U	1.3	0.39	1.3 U	1.3	0.38	1.5 U	1.5	0.43	1.4 U	1.4	0.43
4-Chlorotoluene	400,000	1.3 U	1.3	0.35	1.3 U	1.3	0.36	1.3 U	1.3	0.36	1.5 U	1.5	0.40	1.4 U	1.4	0.40
tert-Butylbenzene	---	1.3 U	1.3	0.39	1.3 U	1.3	0.40	1.3 U	1.3	0.39	1.5 U	1.5	0.44	1.4 U	1.4	0.44
sec-Butylbenzene	---	1.3 U	1.3	0.30	1.3 U	1.3	0.31	1.3 U	1.3	0.31	1.5 U	1.5	0.35	1.4 U	1.4	0.34
4-Isopropyltoluene	---	1.3 U	1.3	0.30	1.3 U	1.3	0.30	1.3 U	1.3	0.30	1.5 U	1.5	0.34	1.4 U	1.4	0.34
n-Butylbenzene	27,000	1.3 U	1.3	0.33	1.3 U	1.3	0.34	1.3 U	1.3	0.34	1.5 U	1.5	0.38	1.4 U	1.4	0.38
1,2,4-Trichlorobenzene	80	6.4 U	6.4	0.42	6.5 U	6.5	0.43	6.4 U	6.4	0.43	7.3 U	7.3	0.48	7.2 U	7.2	0.48
Naphthalene	2,100	6.4 U	6.4	0.54	6.5 U	6.5	0.55	6.4 U	6.4	0.55	7.3 U	7.3	0.62	7.2 U	7.2	0.61
1,2,3-Trichlorobenzene	---	6.4 U	6.4	0.39	6.5 U	6.5	0.39	6.4 U	6.4	0.39	7.3 U	7.3	0.44	7.2 U	7.2	0.44
SEMIVOLATILES (µg/kg)																
Method SW8270D																
Phenol	1,900,000	19 U	19	8.2	19 U	19	8.1	19 U	19	8.2	19 U	19	8.2	110 U	110	48
Bis-(2-Chloroethyl) Ether	---	19 U	19	3.2	19 U	19	3.1	19 U	19	3.2	19 U	19	3.2	110 U	110	19
2-Chlorophenol	---	19 U	19	2.3	19 U	19	2.2	19 U	19	2.3	19 U	19	2.3	110 U	110	13
1,3-Dichlorobenzene	3,840	19 U	19	2.5	19 U	19	2.4	19 U	19	2.5	19 U	19	2.5	110 U	110	15
1,4-Dichlorobenzene	3,500	19 U	19	2.7	19 U	19	2.7	19 U	19	2.7	19 U	19	2.7	110 U	110	16
Benzyl Alcohol	8,000,000	19 U	19	5.8	19 U	19	5.7	19 U	19	5.8	**79**	19	5.8	110 U	110	34
1,2-Dichlorobenzene	68,000	19 U	19	2.4	19 U	19	2.3	19 U	19	2.4	19 U	19	2.4	110 U	110	14
2-Methylphenol	250,000	19 U	19	5.0	19 U	19	4.9	19 U	19	5.0	19 U	19	5.0	110 U	110	29
2,2'-Oxybis(1-Chloropropane)	---	19 U	19	3.6	19 U	19	3.5	19 U	19	3.6	19 U	19	3.6	110 U	110	21
4-Methylphenol	41,000	38 U	38	6.3	37 U	37	6.2	38 U	38	6.3	38 U	38	6.3	220 U	220	37
N-Nitroso-Di-N-Propylamine	---	19 U	19	3.2	19 U	19	3.1	19 U	19	3.2	19 U	19	3.2	110 U	110	19
Hexachloroethane	---	19 U	19	2.8	19 U	19	2.7	19 U	19	2.8	19 U	19	2.8	110 U	110	16
Nitrobenzene	---	19 U	19	3.9	19 U	19	3.8	19 U	19	3.9	19 U	19	3.8	110 U	110	23
Isophorone	---	19 U	19	2.7	19 U	19	2.7	19 U	19	2.7	19 U	19	2.7	110 U	110	16
2-Nitrophenol	---	95 U	95	37	93 U	93	36	95 U	95	37	94 U	94	37	550 U	550	210
2,4-Dimethylphenol	95,000	38 U	38	3.3	37 U	37	3.2	38 U	38	3.3	38 U	38	3.3	220 UJ	220	19
Benzoic Acid	9,000	380 U	380	96	370 U	370	94	380 U	380	96	380 U	380	95	2200 UJ	2200	560
bis(2-Chloroethoxy) Methane	---	19 U	19	1.9	19 U	19	1.9	19 U	19	1.9	19 U	19	1.9	110 U	110	11
2,4-Dichlorophenol	---	190 U	190	20	190 U	190	20	190 U	190	20	190 U	190	20	1100 U	1100	120
1,2,4-Trichlorobenzene	80	19 U	19	3.3	19 U	19	3.2	19 U	19	3.3	19 U	19	3.3	110 U	110	19
Naphthalene	2,100	**9.5** J1	19	2.6	19 U	19	2.6	19 U	19	2.6	19 U	19	2.6	110 U	110	15
4-Chloroaniline	---	260 U	260	21	250 U	250	21	260 U	260	21	260 U	260	21	1500 U	1500	120
Hexachlorobutadiene	---	95 U	95	4.4	93 U	93	4.3	95 U	95	4.3	94 U	94	4.3	550 U	550	25
4-Chloro-3-methylphenol	740,000	95 U	95	14	93 U	93	14	95 U	95	14	94 U	94	14	550 U	550	84
2-Methylnaphthalene	320,000	19 U	19	2.9	19 U	19	2.8	19 U	19	2.9	19 U	19	2.9	**120**	110	17
Hexachlorocyclopentadiene	---	380 U	380	63	370 U	370	62	380 U	380	63	380 U	380	63	2200 UJ	2200	370
2,4,6-Trichlorophenol	---	95 U	95	21	93 U	93	21	95 U	95	21	94 U	94	21	550 U	550	120
2,4,5-Trichlorophenol	---	95 U	95	20	93 U	93	20	95 U	95	20	94 U	94	20	550 U	550	120
2-Chloronaphthalene	---	19 U	19	2.5	19 U	19	2.5	19 U	19	2.5	19 U	19	2.5	110 U	110	15
2-Nitroaniline	---	95 U	95	18	93 U	93	17	95 U	95	18	94 U	94	17	550 U	550	100
Dimethylphthalate	71	19 U	19	2.8	19 U	19	2.7	19 U	19	2.8	19 U	19	2.7	110 U	110	16
Acenaphthylene	---	19 U	19	5.4	19 U	19	5.3	19 U	19	5.4	19 U	19	5.4	110 U	110	32
3-Nitroaniline	---	95 U	95	21	93 U	93	21	95 U	95	21	94 U	94	21	550 U	550	120
Acenaphthene	230,000	19 U	19	3.1	19 U	19	3.1	19 U	19	3.1	19 U	19	3.1	110 U	110	18
2,4-Dinitrophenol	---	810 UJ	810	110	790 UJ	790	100	810 UJ	810	110	800 UJ	800	100	4700 U	4700	620
4-Nitrophenol	---	95 U	95	33	93 U	93	32	95 U	95	33	94 U	94	33	550 U	550	190
Dibenzofuran	80,000	19 U	19	3.9	19 U	19	3.8	19 U	19	3.9	19 U	19	3.9	110 U	110	23
2,6-Dinitrotoluene	---	95 U	95	29	93 U	93	28	95 U	95	29	94 U	94	29	550 U	550	170
2,4-Dinitrotoluene	---	95 U	95	19	93 U	93	18	95 U	95	19	94 U	94	18	550 U	550	110
Diethylphthalate	178,000	48 U	48	35	47 U	47	34	48 U	48	35	47 U	47	35	280 U	280	200
4-Chlorophenyl-phenylether	---	19 U	19	5.0	19 U	19	4.9	19 U	19	5.0	19 U	19	5.0	110 U	110	29
Fluorene	150,000	19 U	19	4.1	19 U	19	4.1	19 U	19	4.1	19 U	19	4.1	110 U	110	24
4-Nitroaniline	---	95 U	95	36	93 U	93	35	95 U	95	36	94 U	94	36	550 U	550	210

TABLE M-2
DIRECT-PUSH SOIL BORINGS SOIL ANALYTICAL RESULTS
BOEING ISAACSON-THOMPSON
REMEDIAL INVESTIGATION

	Preliminary Cleanup Level	IT-SB-9(2-3.5) TX02E 11/14/2011			IT-SB-9(5-6.5) TX02F 11/14/2011			IT-SB-9(8-8.5) TX02G 11/14/2011			IT-SB-9(14-15.5) TX02H 11/14/2011			IT-SB-10(2-3.5) TU90P 11/01/2011		
		Result	Reporting Limit	Detection Limit	Result	Reporting Limit	Detection Limit	Result	Reporting Limit	Detection Limit	Result	Reporting Limit	Detection Limit	Result	Reporting Limit	Detection Limit
4,6-Dinitro-2-Methylphenol	---	190 U	190	20	190 U	190	20	190 U	190	20	190 U	190	20	1100 U	1100	120
N-Nitrosodiphenylamine	204,000	19 U	19	5.1	19 U	19	5.0	19 U	19	5.1	19 U	19	5.1	110 U	110	30
4-Bromophenyl-phenylether	---	19 U	19	4.8	19 U	19	4.7	19 U	19	4.8	19 U	19	4.8	110 U	110	28
Hexachlorobenzene	---	19 U	19	4.1	19 U	19	4.0	19 U	19	4.1	19 U	19	4.1	110 U	110	24
Pentachlorophenol	---	190 U	190	46	190 U	190	45	190 U	190	46	190 U	190	46	1100 U	1100	270
Phenanthrene	---	**30**	19	3.5	**13** J1	19	3.4	19 U	19	3.5	19 U	19	3.4	**120**	110	20
Carbazole	50,000	19 U	19	2.6	19 U	19	2.5	19 U	19	2.6	19 U	19	2.5	110 U	110	15
Anthracene	1,600,000	19 U	19	4.3	19 U	19	4.2	19 U	19	4.3	19 U	19	4.3	110 U	110	25
Di-n-Butylphthalate	26,000	**11** J1	19	7.8	**18** J1	19	7.6	19 U	19	7.8	19 U	19	7.7	110 U	110	45
Fluoranthene	230,000	**39**	19	2.8	**12** J1	19	2.7	19 U	19	2.8	19 U	19	2.8	110 U	110	16
Pyrene	240,000	**56** J	19	1.8	**18** J, J1	19	1.8	19 U	19	1.8	19 U	19	1.8	**83** J1	110	11
Butylbenzylphthalate	1,700	19 U	19	5.8	19 U	19	5.7	19 U	19	5.8	19 U	19	5.8	110 U	110	34
3,3'-Dichlorobenzidine	---	140 U	140	17	140 U	140	17	140 U	140	17	140 U	140	17	830 UJ	830	99
Benzo(a)anthracene	---	**25**	19	3.1	19 U	19	3.1	19 U	19	3.1	19 U	19	3.1	110 U	110	18
bis(2-Ethylhexyl)phthalate	56,600	29 U	24	14	84 U	23	14	36 U	24	14	57 U	24	14	140 U	140	81
Chrysene	---	**29**	19	3.6	**15** J1	19	3.5	19 U	19	3.6	19 U	19	3.5	**150**	110	21
Di-n-Octyl phthalate	---	19 U	19	5.6	19 U	19	5.4	19 U	19	5.6	19 U	19	5.5	110 U	110	32
Benzo(a)pyrene	---	**24**	19	5.2	**11** J1	19	5.1	19 U	19	5.2	19 U	19	5.2	**72** J1	110	30
Indeno(1,2,3-cd)pyrene	---	**18** J1	19	4.5	19 U	19	4.4	19 U	19	4.5	19 U	19	4.4	110 U	110	26
Dibenz(a,h)anthracene	---	19 U	19	4.1	19 U	19	4.0	19 U	19	4.1	19 U	19	4.1	110 U	110	24
Benzo(g,h,i)perylene	---	**18** J1	19	4.2	19 U	19	4.1	19 U	19	4.2	19 U	19	4.2	110 U	110	24
1-Methylnaphthalene	16,000	19 U	19	2.6	19 U	19	2.5	19 U	19	2.5	19 U	19	2.5	110 U	110	15
Total Benzofluoranthenes	---	**40**	19	2.6	**21**	19	2.6	19 U	19	2.6	19 U	19	2.6	110 U	110	15
cPAH TEQ	15	**33** J	NA	NA	**13** J	NA	NA	ND	NA	NA	ND	NA	NA	**74** J	NA	NA
PAHs (µg/kg)																
Method SW8270D-SIM																
Naphthalene	2,100	**11**	4.7	2.5	**6.4**	4.7	2.5	4.8 U	4.8	2.5	**3.0** J1	4.7	2.5	**26**	13	6.9
2-Methylnaphthalene	320,000	**6.6**	4.7	1.4	**7.1**	4.7	1.4	4.8 U	4.8	1.4	**3.7** J1	4.7	1.4	**52**	13	4.0
1-Methylnaphthalene	16,000	**6.0**	4.7	1.6	**6.6**	4.7	1.6	4.8 U	4.8	1.6	**3.1** J1	4.7	1.6	**39**	13	4.5
Total Naphthalenes	---	**23.6**	NA	NA	**20.1**	NA	NA	4.8 U	NA	NA	**9.8** J1	NA	NA	**117**	NA	NA
Acenaphthylene	---	**6.9**	4.7	1.2	4.7 U	4.7	1.2	4.8 U	4.8	1.2	4.7 U	4.7	1.2	**9.7** J1	13	3.3
Acenaphthene	230,000	**2.9** J1	4.7	1.3	**8.9**	4.7	1.2	4.8 U	4.8	1.3	4.7 U	4.7	1.2	13 U	13	3.4
Fluorene	150,000	**3.9** J1	4.7	1.2	**5.4**	4.7	1.2	4.8 U	4.8	1.2	4.7 U	4.7	1.2	**9.9** J1	13	3.4
Phenanthrene	---	**83**	4.7	1.9	**73**	4.7	1.9	4.8 U	4.8	1.9	**5.6**	4.7	1.9	**91**	13	5.2
Anthracene	1,600,000	**4.7**	4.7	1.4	**15**	4.7	1.4	4.8 U	4.8	1.4	4.7 U	4.7	1.4	**24**	13	3.8
Fluoranthene	230,000	**99**	4.7	1.7	**79**	4.7	1.7	4.8 U	4.8	1.7	4.7 U	4.7	1.7	**74**	13	4.6
Pyrene	240,000	**95**	4.7	2.1	**66**	4.7	2.1	4.8 U	4.8	2.1	4.7 U	4.7	2.1	**71**	13	5.8
Benzo(a)anthracene	---	**26**	4.7	1.5	**32**	4.7	1.5	4.8 U	4.8	1.5	4.7 U	4.7	1.5	**26**	13	4.2
Chrysene	---	**51**	4.7	1.8	**38**	4.7	1.8	4.8 U	4.8	1.8	4.7 U	4.7	1.8	**120**	13	4.9
Benzo(a)pyrene	---	**41**	4.7	1.7	**34**	4.7	1.6	4.8 U	4.8	1.7	4.7 U	4.7	1.6	**45**	13	4.6
Indeno(1,2,3-cd)pyrene	---	**30**	4.7	3.3	**22**	4.7	3.3	4.8 U	4.8	3.3	4.7 U	4.7	3.3	**34**	13	9.1
Dibenz(a,h)anthracene	---	**8.0**	4.7	2.3	**6.7**	4.7	2.2	4.8 U	4.8	2.3	4.7 U	4.7	2.2	**14**	13	6.2
Benzo(g,h,i)perylene	---	**33**	4.7	2.9	**27**	4.7	2.9	4.8 U	4.8	2.9	4.7 U	4.7	2.9	**100**	13	8.0
Dibenzofuran	80,000	**5.6**	4.7	1.4	**5.1**	4.7	1.4	4.8 U	4.8	1.4	4.7 U	4.7	1.4	**12** J1	13	3.9
Total Benzofluoranthenes	---	**76**	4.7	1.8	**58**	4.7	1.7	4.8 U	4.8	1.8	4.7 U	4.7	1.7	**70**	13	4.8
cPAH TEQ	15	**56**	NA	NA	**46**	NA	NA	ND	NA	NA	ND	NA	NA	**61**	NA	NA

TABLE M-2
DIRECT-PUSH SOIL BORINGS SOIL ANALYTICAL RESULTS
BOEING ISAACSON-THOMPSON
REMEDIAL INVESTIGATION

	Preliminary Cleanup Level	IT-SB-9(2-3.5) TX02E 11/14/2011			IT-SB-9(5-6.5) TX02F 11/14/2011			IT-SB-9(8-8.5) TX02G 11/14/2011			IT-SB-9(14-15.5) TX02H 11/14/2011			IT-SB-10(2-3.5) TU90P 11/01/2011		
		Result	Reporting Limit	Detection Limit	Result	Reporting Limit	Detection Limit	Result	Reporting Limit	Detection Limit	Result	Reporting Limit	Detection Limit	Result	Reporting Limit	Detection Limit
PCBs (µg/kg)																
Method SW8082																
Aroclor 1016	0.72	33 U	33	2.0	33 U	33	2.0	33 U	33	2.0	32 U	32	2.0	150 U	150	9.3
Aroclor 1242	0.72	33 U	33	2.4	33 U	33	2.4	33 U	33	2.4	32 U	32	2.4	150 U	150	11
Aroclor 1248	220	33 U	33	2.4	33 U	33	2.4	33 U	33	2.4	32 U	32	2.4	150 U	150	11
Aroclor 1254	0.29	33 U	33	2.4	**43**	33	2.4	33 U	33	2.4	32 U	32	2.4	150 U	150	11
Aroclor 1260	5.4	33 U	33	2.4	33 U	33	2.4	33 U	33	2.4	32 U	32	2.4	150 U	150	11
Aroclor 1221	---	33 U	33	2.4	33 U	33	2.4	33 U	33	2.4	32 U	32	2.4	150 U	150	11
Aroclor 1232	---	33 U	33	2.4	33 U	33	2.4	33 U	33	2.4	32 U	32	2.4	150 U	150	11
Total PCBs	1.8	ND	NA	NA	**43**	NA	NA	ND	NA	NA	ND	NA	NA	ND	NA	NA
TOTAL PETROLEUM HYDROCARBONS (mg/kg)																
NWTPH-Dx																
Diesel-Range Organics	2,000	5.7 U	5.7	1.5	5.6 U	5.6	1.4	5.2 U	5.2	1.3	6.2 U	6.2	1.6	**400**	26	6.6
Oil-Range Organics	2,000	11 U	11	1.8	11 U	11	1.8	10 U	10	1.6	**13**	12	2.0	**770**	52	8.1
NWTPH-G																
Gasoline-Range Organics	100/30	6.9 U	6.9	3.3	6.7 U	6.7	3.2	7.1 U	7.1	3.4	8.3 U	8.3	4.0	6.1 U	6.1	2.9
TOTAL METALS (mg/kg)																
Methods 200.8/7471A/SW7196A																
Antimony	5	0.2 U	0.2	0.015	0.2 U	0.2	0.015	0.2 U	0.2	0.013	0.3 U	0.3	0.017	0.2 U	0.2	0.014
Arsenic	7	**3.7**	0.2	0.098	**3.4**	0.2	0.098	**2.0**	0.2	0.087	**2.2**	0.3	0.12	**25.9**	0.2	0.094
Barium	640	**47.8**	0.6	0.063	**48.6**	0.6	0.063	**25.8**	0.5	0.056	**45.1**	0.7	0.075	**150**	0.5	0.061
Beryllium	160	0.2 U	0.2	0.020	0.2 U	0.2	0.020	0.2 U	0.2	0.018	0.3 U	0.3	0.024	**0.3**	0.2	0.019
Cadmium	1.3	0.1 U	0.1	0.013	0.1 U	0.1	0.014	0.1 U	0.1	0.012	0.1 U	0.1	0.016	**0.1**	0.1	0.013
Chromium	1,480	**11.2**	0.6	0.043	**14.7**	0.6	0.043	**9.0**	0.5	0.038	**14.0**	0.7	0.051	**20.7**	0.5	0.041
Chromium VI	3.8	0.443 U	0.443	0.030	0.447 U	0.447	0.030	0.421 U	0.421	0.030	0.536 U	0.536	0.030	0.445 U	0.445	0.030
Copper	36	**16.8**	0.6	0.040	**18.0**	0.6	0.041	**10.6**	0.5	0.036	**17.9**	0.7	0.048	**45.9**	0.5	0.039
Lead	250	**11.8**	0.1	0.053	**19.7**	0.1	0.053	**1.3**	0.1	0.047	**2.1**	0.1	0.063	**29.3**	0.1	0.051
Mercury	1.5	**0.04**	0.03	0.0013	0.03 U	0.03	0.0014	0.02 U	0.02	0.0010	0.03 U	0.03	0.0014	**0.06**	0.03	0.0013
Nickel	210	**9.2**	0.6	0.055	**17.2**	0.6	0.055	**8.0**	0.5	0.049	**11.0**	0.7	0.065	**31.6**	0.5	0.053
Selenium	1.0	0.6 U	0.6	0.11	0.6 U	0.6	0.11	0.5 U	0.5	0.099	0.7 U	0.7	0.13	0.5 U	0.5	0.11
Silver	170	0.2 U	0.2	0.0090	**0.6**	0.2	0.0090	0.2 U	0.2	0.0080	0.3 U	0.3	0.011	0.2 U	0.2	0.0086
Thallium	0.67	0.2 U	0.2	0.0034	0.2 U	0.2	0.0034	0.2 U	0.2	0.0030	0.3 U	0.3	0.0040	0.2 U	0.2	0.0032
Zinc	1,400	**40**	4	0.38	**55**	5	0.38	**20**	4	0.34	**32**	5	0.45	**93**	4	0.37

TABLE M-2
DIRECT-PUSH SOIL BORINGS SOIL ANALYTICAL RESULTS
BOEING ISAACSON-THOMPSON
REMEDIAL INVESTIGATION

	Preliminary Cleanup Level	IT-SB-10(5-6.5) TU90Q 11/01/2011			IT-SB-10(8-9.5) TU90T 11/01/2011			IT-SB-10(13.5-15) TU90S 11/01/2011			IT-SB-11(2-3.5) TX02A 11/14/2011			IT-SB-11(5-6.5) TX02B 11/14/2011		
		Result	Reporting Limit	Detection Limit	Result	Reporting Limit	Detection Limit	Result	Reporting Limit	Detection Limit	Result	Reporting Limit	Detection Limit	Result	Reporting Limit	Detection Limit
VOLATILES (µg/kg)																
Method SW8260C																
Chloromethane	1,600	1.1 UJ	1.1	0.29	1.5 UJ	1.5	0.38	1.6 UJ	1.6	0.42	1.1 U	1.1	0.29	1.2 U	1.2	0.32
Bromomethane	---	1.1 UJ	1.1	0.21	1.5 UJ	1.5	0.27	1.6 UJ	1.6	0.30	1.1 UJ	1.1	0.21	1.2 UJ	1.2	0.23
Vinyl Chloride	7.4	1.1 U	1.1	0.26	1.5 U	1.5	0.34	1.6 U	1.6	0.38	1.1 U	1.1	0.26	1.2 U	1.2	0.29
Chloroethane	280,000	1.1 U	1.1	0.51	1.5 U	1.5	0.67	1.6 U	1.6	0.74	1.1 U	1.1	0.51	1.2 U	1.2	0.56
Methylene Chloride	2400	**2.2** J, J1	2.2	0.70	**2.2** J, J1	2.9	0.92	**2.1** J, J1	3.2	1.0	**0.9** J1	2.2	0.70	**1.0** J1	2.4	0.78
Acetone	510,000	**23** J	5.5	0.53	**21** J	7.3	0.70	**27** J	8.0	0.77	**40** J	5.5	0.53	**52** J	6.1	0.59
Carbon Disulfide	75,000	1.1 U	1.1	0.62	1.5 U	1.5	0.81	1.6 U	1.6	0.89	**0.8** J1	1.1	0.61	**2.8**	1.2	0.68
1,1-Dichloroethene	81	1.1 U	1.1	0.37	1.5 U	1.5	0.49	1.6 U	1.6	0.54	1.1 U	1.1	0.37	1.2 U	1.2	0.41
1,1-Dichloroethane	710	1.1 U	1.1	0.22	1.5 U	1.5	0.30	1.6 U	1.6	0.32	1.1 U	1.1	0.22	1.2 U	1.2	0.25
trans-1,2-Dichloroethene	19,000	1.1 U	1.1	0.29	1.5 U	1.5	0.39	1.6 U	1.6	0.42	1.1 UJ	1.1	0.29	1.2 UJ	1.2	0.33
cis-1,2-Dichloroethene	2,600	1.1 U	1.1	0.27	1.5 U	1.5	0.35	1.6 U	1.6	0.38	1.1 U	1.1	0.26	1.2 U	1.2	0.29
Chloroform	200	1.1 U	1.1	0.26	1.5 U	1.5	0.34	1.6 U	1.6	0.37	1.1 U	1.1	0.26	1.2 U	1.2	0.29
1,2-Dichloroethane	70	1.1 U	1.1	0.21	1.5 U	1.5	0.28	1.6 U	1.6	0.31	1.1 U	1.1	0.21	1.2 U	1.2	0.23
2-Butanone	430,000	**3.3** J1	5.5	0.57	7.3 U	7.3	0.75	8.0 U	8.0	0.82	**3.1** J1	5.5	0.56	**8.7**	6.1	0.63
1,1,1-Trichloroethane	1,900,000	1.1 U	1.1	0.25	1.5 U	1.5	0.33	1.6 U	1.6	0.36	1.1 U	1.1	0.25	1.2 U	1.2	0.28
Carbon Tetrachloride	21	1.1 U	1.1	0.24	1.5 U	1.5	0.31	1.6 U	1.6	0.34	1.1 U	1.1	0.23	1.2 U	1.2	0.26
Vinyl Acetate	---	5.5 U	5.5	0.42	7.3 U	7.3	0.55	8.0 U	8.0	0.61	5.5 U	5.5	0.42	6.1 U	6.1	0.47
Bromodichloromethane	89	1.1 U	1.1	0.28	1.5 U	1.5	0.37	1.6 U	1.6	0.41	1.1 U	1.1	0.28	1.2 U	1.2	0.31
1,2-Dichloropropane	92	1.1 U	1.1	0.18	1.5 U	1.5	0.24	1.6 U	1.6	0.26	1.1 U	1.1	0.18	1.2 U	1.2	0.20
cis-1,3-Dichloropropene	---	1.1 U	1.1	0.25	1.5 U	1.5	0.33	1.6 U	1.6	0.36	1.1 U	1.1	0.25	1.2 U	1.2	0.28
Trichloroethene	51	1.1 U	1.1	0.23	1.5 U	1.5	0.31	1.6 U	1.6	0.34	**1.0** J1	1.1	0.23	**1.5**	1.2	0.26
Dibromochloromethane	---	1.1 U	1.1	0.29	1.5 U	1.5	0.39	1.6 U	1.6	0.42	1.1 U	1.1	0.29	1.2 U	1.2	0.33
1,1,2-Trichloroethane	73	1.1 U	1.1	0.32	1.5 U	1.5	0.42	1.6 U	1.6	0.46	1.1 U	1.1	0.31	1.2 U	1.2	0.35
Benzene	93	1.1 U	1.1	0.33	1.5 U	1.5	0.43	1.6 U	1.6	0.47	**0.7** J1	1.1	0.32	**1.5**	1.2	0.36
trans-1,3-Dichloropropene	---	1.1 U	1.1	0.24	1.5 U	1.5	0.31	1.6 U	1.6	0.35	1.1 U	1.1	0.24	1.2 U	1.2	0.26
2-Chloroethylvinylether	---	5.5 U	5.5	0.31	7.3 U	7.3	0.40	8.0 U	8.0	0.44	5.5 U	5.5	0.30	6.1 U	6.1	0.34
Bromoform	---	1.1 U	1.1	0.33	1.5 U	1.5	0.43	1.6 U	1.6	0.47	1.1 U	1.1	0.33	1.2 U	1.2	0.36
4-Methyl-2-Pentanone (MIBK)	170,000	5.5 U	5.5	0.46	7.3 U	7.3	0.61	8.0 U	8.0	0.67	5.5 U	5.5	0.46	6.1 U	6.1	0.51
2-Hexanone	32,000	5.5 U	5.5	0.49	7.3 U	7.3	0.64	8.0 U	8.0	0.70	5.5 U	5.5	0.48	6.1 U	6.1	0.54
Tetrachloroethene	260	1.1 U	1.1	0.28	1.5 U	1.5	0.37	1.6 U	1.6	0.41	1.1 U	1.1	0.28	1.2 U	1.2	0.31
1,1,2,2-Tetrachloroethane	13	1.1 U	1.1	0.28	1.5 U	1.5	0.37	1.6 U	1.6	0.40	1.1 U	1.1	0.28	1.2 U	1.2	0.31
Toluene	100,000	1.1 U	1.1	0.17	1.5 U	1.5	0.22	1.6 U	1.6	0.24	1.1 U	1.1	0.17	**2.1**	1.2	0.18
Chlorobenzene	26,000	1.1 U	1.1	0.24	1.5 U	1.5	0.32	1.6 U	1.6	0.35	1.1 U	1.1	0.24	1.2 U	1.2	0.27
Ethylbenzene	230	1.1 U	1.1	0.22	1.5 U	1.5	0.29	1.6 U	1.6	0.32	1.1 U	1.1	0.22	**1.1** J1	1.2	0.25
Styrene	16,000,000	1.1 U	1.1	0.15	1.5 U	1.5	0.20	1.6 U	1.6	0.22	1.1 U	1.1	0.15	1.2 U	1.2	0.17
Trichlorofluoromethane	200,000	1.1 U	1.1	0.29	1.5 U	1.5	0.39	1.6 U	1.6	0.42	**1.0** J1	1.1	0.29	**0.7** J1	1.2	0.33
1,1,2-Trichloro-1,2,2-trifuoroethane	1,000,000,000	2.2 U	2.2	0.32	2.9 U	2.9	0.42	3.2 U	3.2	0.46	2.2 U	2.2	0.31	2.4 U	2.4	0.35
m,p-Xylene	160,000	1.1 U	1.1	0.43	1.5 U	1.5	0.57	1.6 U	1.6	0.63	1.1 U	1.1	0.43	**5.0**	1.2	0.48
o-Xylene	200,000	1.1 U	1.1	0.25	1.5 U	1.5	0.33	1.6 U	1.6	0.36	1.1 U	1.1	0.25	**2.3**	1.2	0.27
1,2-Dichlorobenzene	68,000	1.1 U	1.1	0.32	1.5 U	1.5	0.43	1.6 U	1.6	0.47	1.1 U	1.1	0.32	1.2 U	1.2	0.36
1,3-Dichlorobenzene	3,840	1.1 U	1.1	0.25	1.5 U	1.5	0.33	1.6 U	1.6	0.36	1.1 U	1.1	0.25	1.2 U	1.2	0.28
1,4-Dichlorobenzene	3,500	1.1 U	1.1	0.26	1.5 U	1.5	0.34	1.6 U	1.6	0.37	1.1 U	1.1	0.25	1.2 U	1.2	0.28
Acrolein	---	55 UJ	55	4.2	73 UJ	73	5.5	80 UJ	80	6.1	55 UJ	55	4.2	61 UJ	61	4.7
Methyl Iodide	---	1.1 U	1.1	0.24	1.5 U	1.5	0.31	1.6 U	1.6	0.34	1.1 U	1.1	0.24	1.2 U	1.2	0.26
Bromoethane	---	2.2 U	2.2	0.49	2.9 U	2.9	0.64	3.2 U	3.2	0.70	2.2 U	2.2	0.48	2.4 U	2.4	0.54
Acrylonitrile	---	5.5 U	5.5	1.1	7.3 U	7.3	1.5	8.0 U	8.0	1.6	5.5 U	5.5	1.1	6.1 U	6.1	1.3
1,1-Dichloropropene	---	1.1 U	1.1	0.35	1.5 U	1.5	0.45	1.6 U	1.6	0.50	1.1 U	1.1	0.34	1.2 U	1.2	0.38
Dibromomethane	---	1.1 U	1.1	0.16	1.5 U	1.5	0.21	1.6 U	1.6	0.23	1.1 U	1.1	0.16	1.2 U	1.2	0.18
1,1,1,2-Tetrachloroethane	---	1.1 U	1.1	0.26	1.5 U	1.5	0.34	1.6 U	1.6	0.37	1.1 U	1.1	0.26	1.2 U	1.2	0.28
1,2-Dibromo-3-chloropropane	---	5.5 U	5.5	0.65	7.3 U	7.3	0.85	8.0 U	8.0	0.94	5.5 U	5.5	0.64	6.1 U	6.1	0.72
1,2,3-Trichloropropane	---	2.2 U	2.2	0.57	2.9 U	2.9	0.75	3.2 U	3.2	0.83	2.2 U	2.2	0.57	2.4 U	2.4	0.63
trans-1,4-Dichloro-2-butene	---	5.5 U	5.5	0.48	7.3 U	7.3	0.64	8.0 U	8.0	0.70	5.5 U	5.5	0.48	6.1 U	6.1	0.53
1,3,5-Trimethylbenzene	800,000	1.1 U	1.1	0.28	1.5 U	1.5	0.37	1.6 U	1.6	0.41	1.1 U	1.1	0.28	1.2 U	1.2	0.31
1,2,4-Trimethylbenzene	800,000	1.1 U	1.1	0.25	1.5 U	1.5	0.33	1.6 U	1.6	0.37	1.1 U	1.1	0.25	**0.7** J1	1.2	0.28
Hexachlorobutadiene	---	5.5 U	5.5	0.45	7.3 U	7.3	0.60	8.0 U	8.0	0.65	5.5 U	5.5	0.45	6.1 U	6.1	0.50
Ethylene Dibromide	---	1.1 U	1.1	0.19	1.5 U	1.5	0.26	1.6 U	1.6	0.28	1.1 U	1.1	0.19	1.2 U	1.2	0.22
Bromochloromethane	---	1.1 U	1.1	0.36	1.5 U	1.5	0.47	1.6 U	1.6	0.52	1.1 UJ	1.1	0.35	1.2 UJ	1.2	0.39

TABLE M-2
DIRECT-PUSH SOIL BORINGS SOIL ANALYTICAL RESULTS
BOEING ISAACSON-THOMPSON
REMEDIAL INVESTIGATION

	Preliminary Cleanup Level	IT-SB-10(5-6.5) TU90Q 11/01/2011			IT-SB-10(8-9.5) TU90T 11/01/2011			IT-SB-10(13.5-15) TU90S 11/01/2011			IT-SB-11(2-3.5) TX02A 11/14/2011			IT-SB-11(5-6.5) TX02B 11/14/2011		
		Result	Reporting Limit	Detection Limit	Result	Reporting Limit	Detection Limit	Result	Reporting Limit	Detection Limit	Result	Reporting Limit	Detection Limit	Result	Reporting Limit	Detection Limit
2,2-Dichloropropane	---	1.1 U	1.1	0.32	1.5 U	1.5	0.42	1.6 U	1.6	0.47	1.1 U	1.1	0.32	1.2 U	1.2	0.36
1,3-Dichloropropane	---	1.1 U	1.1	0.23	1.5 U	1.5	0.30	1.6 U	1.6	0.33	1.1 U	1.1	0.23	1.2 U	1.2	0.26
Isopropylbenzene	78,000	1.1 U	1.1	0.26	1.5 U	1.5	0.34	1.6 U	1.6	0.37	1.1 U	1.1	0.26	1.2 U	1.2	0.28
n-Propylbenzene	11,000	1.1 U	1.1	0.30	1.5 U	1.5	0.40	1.6 U	1.6	0.43	1.1 U	1.1	0.30	1.2 U	1.2	0.33
Bromobenzene	---	1.1 U	1.1	0.17	1.5 U	1.5	0.22	1.6 U	1.6	0.24	1.1 U	1.1	0.17	1.2 U	1.2	0.19
2-Chlorotoluene	---	1.1 U	1.1	0.33	1.5 U	1.5	0.44	1.6 U	1.6	0.48	1.1 U	1.1	0.33	1.2 U	1.2	0.37
4-Chlorotoluene	400,000	1.1 U	1.1	0.31	1.5 U	1.5	0.40	1.6 U	1.6	0.44	1.1 U	1.1	0.30	1.2 U	1.2	0.34
tert-Butylbenzene	---	1.1 U	1.1	0.34	1.5 U	1.5	0.44	1.6 U	1.6	0.49	1.1 U	1.1	0.34	1.2 U	1.2	0.37
sec-Butylbenzene	---	1.1 U	1.1	0.27	1.5 U	1.5	0.35	1.6 U	1.6	0.38	1.1 U	1.1	0.26	1.2 U	1.2	0.29
4-Isopropyltoluene	---	1.1 U	1.1	0.26	1.5 U	1.5	0.34	1.6 U	1.6	0.38	1.1 U	1.1	0.26	1.2 U	1.2	0.29
n-Butylbenzene	27,000	1.1 U	1.1	0.29	1.5 U	1.5	0.38	1.6 U	1.6	0.42	1.1 U	1.1	0.29	1.2 U	1.2	0.32
1,2,4-Trichlorobenzene	80	5.5 U	5.5	0.37	7.3 U	7.3	0.48	8.0 U	8.0	0.53	5.5 U	5.5	0.36	6.1 U	6.1	0.41
Naphthalene	2,100	5.5 U	5.5	0.47	7.3 U	7.3	0.62	8.0 U	8.0	0.69	5.5 U	5.5	0.47	6.1 U	6.1	0.52
1,2,3-Trichlorobenzene	---	5.5 U	5.5	0.34	7.3 U	7.3	0.44	8.0 U	8.0	0.49	5.5 U	5.5	0.33	6.1 U	6.1	0.37
SEMIVOLATILES (µg/kg)																
Method SW8270D																
Phenol	1,900,000	18 UJ	18	7.8	19 U	19	8.2	19 U	19	8.1	18 U	18	7.9	20 U	20	8.5
Bis-(2-Chloroethyl) Ether	---	18 U	18	3.0	19 U	19	3.2	19 U	19	3.1	18 U	18	3.1	20 U	20	3.3
2-Chlorophenol	---	18 UJ	18	2.2	19 U	19	2.3	19 U	19	2.2	18 U	18	2.2	20 U	20	2.3
1,3-Dichlorobenzene	3,840	18 U	18	2.4	19 U	19	2.5	19 U	19	2.5	18 U	18	2.4	20 U	20	2.6
1,4-Dichlorobenzene	3,500	18 U	18	2.6	19 U	19	2.7	19 U	19	2.7	18 U	18	2.6	20 U	20	2.8
Benzyl Alcohol	8,000,000	18 U	18	5.5	19 U	19	5.8	19 U	19	5.7	18 U	18	5.6	20 U	20	6.0
1,2-Dichlorobenzene	68,000	18 U	18	2.3	19 U	19	2.4	19 U	19	2.3	18 U	18	2.3	20 U	20	2.4
2-Methylphenol	250,000	18 UJ	18	4.7	19 U	19	5.0	19 U	19	4.9	18 U	18	4.8	20 U	20	5.1
2,2'-Oxybis(1-Chloropropane)	---	18 U	18	3.4	19 U	19	3.6	19 U	19	3.5	18 U	18	3.4	20 U	20	3.7
4-Methylphenol	41,000	36 UJ	36	6.0	38 U	38	6.3	37 U	37	6.2	36 U	36	6.1	39 U	39	6.5
N-Nitroso-Di-N-Propylamine	---	18 U	18	3.0	19 U	19	3.2	19 U	19	3.1	18 U	18	3.1	20 U	20	3.3
Hexachloroethane	---	18 U	18	2.7	19 U	19	2.8	19 U	19	2.7	18 U	18	2.7	20 U	20	2.9
Nitrobenzene	---	18 U	18	3.7	19 U	19	3.8	19 U	19	3.8	18 U	18	3.7	20 U	20	4.0
Isophorone	---	18 U	18	2.6	19 U	19	2.7	19 U	19	2.7	18 U	18	2.6	20 U	20	2.8
2-Nitrophenol	---	90 UJ	90	35	95 U	95	37	93 U	93	36	91 U	91	35	98 U	98	38
2,4-Dimethylphenol	95,000	36 UJ	36	3.1	38 UJ	38	3.3	37 UJ	37	3.2	36 U	36	3.2	39 U	39	3.4
Benzoic Acid	9,000	360 UJ	360	91	380 UJ	380	96	370 UJ	370	94	360 U	360	92	390 U	390	99
bis(2-Chloroethoxy) Methane	---	18 U	18	1.8	19 U	19	1.9	19 U	19	1.9	18 U	18	1.8	20 U	20	2.0
2,4-Dichlorophenol	---	180 UJ	180	19	190 U	190	20	190 U	190	20	180 U	180	20	200 U	200	21
1,2,4-Trichlorobenzene	80	18 U	18	3.1	19 U	19	3.3	19 U	19	3.2	18 U	18	3.2	20 U	20	3.4
Naphthalene	2,100	18 U	18	2.5	19 U	19	2.6	19 U	19	2.6	18 U	18	2.5	20 U	20	2.7
4-Chloroaniline	---	240 U	240	20	260 U	260	21	250 U	250	21	250 U	250	20	260 U	260	22
Hexachlorobutadiene	---	90 U	90	4.1	95 U	95	4.3	93 U	93	4.3	91 U	91	4.2	98 U	98	4.5
4-Chloro-3-methylphenol	740,000	90 UJ	90	14	95 U	95	14	93 U	93	14	91 U	91	14	98 U	98	15
2-Methylnaphthalene	320,000	18 U	18	2.8	19 U	19	2.9	19 U	19	2.9	18 U	18	2.8	20 U	20	3.0
Hexachlorocyclopentadiene	---	360 UJ	360	60	380 UJ	380	63	370 UJ	370	62	360 U	360	61	390 U	390	65
2,4,6-Trichlorophenol	---	90 UJ	90	20	95 U	95	21	93 U	93	21	91 U	91	20	98 U	98	22
2,4,5-Trichlorophenol	---	90 UJ	90	19	95 U	95	20	93 U	93	20	91 U	91	20	98 U	98	21
2-Chloronaphthalene	---	18 U	18	2.4	19 U	19	2.5	19 U	19	2.5	18 U	18	2.4	20 U	20	2.6
2-Nitroaniline	---	90 U	90	17	95 U	95	17	93 U	93	17	91 U	91	17	98 U	98	18
Dimethylphthalate	71	18 U	18	2.6	19 U	19	2.7	19 U	19	2.7	18 U	18	2.6	20 U	20	2.8
Acenaphthylene	---	18 U	18	5.2	19 U	19	5.4	19 U	19	5.3	18 U	18	5.2	20 U	20	5.6
3-Nitroaniline	---	90 U	90	20	95 U	95	21	93 U	93	21	91 U	91	21	98 U	98	22
Acenaphthene	230,000	18 U	18	3.0	19 U	19	3.1	19 U	19	3.1	18 U	18	3.0	20 U	20	3.2
2,4-Dinitrophenol	---	770 UJ	770	100	800 U	800	110	790 U	790	100	780 UJ	780	100	830 UJ	830	110
4-Nitrophenol	---	90 UJ	90	31	95 U	95	33	93 U	93	32	91 U	91	32	98 U	98	34
Dibenzofuran	80,000	18 U	18	3.7	19 U	19	3.9	19 U	19	3.8	18 U	18	3.7	20 U	20	4.0
2,6-Dinitrotoluene	---	90 U	90	28	95 U	95	29	93 U	93	29	91 U	91	28	98 U	98	30
2,4-Dinitrotoluene	---	90 U	90	18	95 U	95	18	93 U	93	18	91 U	91	18	98 U	98	19
Diethylphthalate	178,000	45 U	45	33	47 U	47	35	47 U	47	34	46 U	46	33	49 U	49	36
4-Chlorophenyl-phenylether	---	18 U	18	4.8	19 U	19	5.0	19 U	19	4.9	18 U	18	4.8	20 U	20	5.2
Fluorene	150,000	18 U	18	3.9	19 U	19	4.1	19 U	19	4.1	18 U	18	4.0	20 U	20	4.3
4-Nitroaniline	---	90 U	90	34	95 U	95	36	93 U	93	35	91 U	91	35	98 U	98	37

TABLE M-2
DIRECT-PUSH SOIL BORINGS SOIL ANALYTICAL RESULTS
BOEING ISAACSON-THOMPSON
REMEDIAL INVESTIGATION

	Preliminary Cleanup Level	IT-SB-10(5-6.5) TU90Q 11/01/2011			IT-SB-10(8-9.5) TU90T 11/01/2011			IT-SB-10(13.5-15) TU90S 11/01/2011			IT-SB-11(2-3.5) TX02A 11/14/2011			IT-SB-11(5-6.5) TX02B 11/14/2011		
		Result	Reporting Limit	Detection Limit	Result	Reporting Limit	Detection Limit	Result	Reporting Limit	Detection Limit	Result	Reporting Limit	Detection Limit	Result	Reporting Limit	Detection Limit
4,6-Dinitro-2-Methylphenol	---	180 UJ	180	19	190 U	190	20	190 U	190	20	180 U	180	19	200 U	200	21
N-Nitrosodiphenylamine	204,000	18 U	18	4.9	19 U	19	5.1	19 U	19	5.0	18 U	18	4.9	20 U	20	5.3
4-Bromophenyl-phenylether	---	18 U	18	4.5	19 U	19	4.8	19 U	19	4.7	18 U	18	4.6	20 U	20	4.9
Hexachlorobenzene	---	18 U	18	3.9	19 U	19	4.1	19 U	19	4.0	18 U	18	3.9	20 U	20	4.2
Pentachlorophenol	---	180 UJ	180	44	190 U	190	46	190 U	190	45	180 U	180	44	200 U	200	47
Phenanthrene	---	**14** J1	18	3.3	19 U	19	3.4	19 U	19	3.4	**10** J1	18	3.3	20 U	20	3.6
Carbazole	50,000	18 U	18	2.4	19 U	19	2.5	19 U	19	2.5	18 U	18	2.5	20 U	20	2.6
Anthracene	1,600,000	18 U	18	4.1	19 U	19	4.3	19 U	19	4.2	18 U	18	4.1	20 U	20	4.4
Di-n-Butylphthalate	26,000	18 U	18	7.4	19 U	19	7.7	19 U	19	7.6	**13** J1	18	7.5	**13** J1	20	8.0
Fluoranthene	230,000	18 U	18	2.6	19 U	19	2.8	19 U	19	2.7	**11** J1	18	2.7	20 U	20	2.8
Pyrene	240,000	18 U	18	1.8	19 U	19	1.8	19 U	19	1.8	**12** J, J1	18	1.8	20 U	20	1.9
Butylbenzylphthalate	1,700	18 U	18	5.5	19 U	19	5.8	19 U	19	5.7	18 U	18	5.6	20 U	20	6.0
3,3'-Dichlorobenzidine	---	140 UJ	140	16	140 UJ	140	17	140 UJ	140	17	140 U	140	16	150 U	150	17
Benzo(a)anthracene	---	18 U	18	3.0	19 U	19	3.1	19 U	19	3.1	18 U	18	3.0	20 U	20	3.2
bis(2-Ethylhexyl)phthalate	56,600	23 U	23	13	24 U	24	14	23 U	23	14	26 U	23	13	38 U	24	14
Chrysene	---	**22**	18	3.4	19 U	19	3.5	19 U	19	3.5	**10** J1	18	3.4	20 U	20	3.7
Di-n-Octyl phthalate	---	18 U	18	5.3	19 U	19	5.5	19 U	19	5.4	18 U	18	5.3	20 U	20	5.7
Benzo(a)pyrene	---	18 U	18	4.9	19 U	19	5.2	19 U	19	5.1	18 U	18	5.0	20 U	20	5.3
Indeno(1,2,3-cd)pyrene	---	18 U	18	4.2	19 U	19	4.4	19 U	19	4.4	**11** J1	18	4.3	20 U	20	4.6
Dibenz(a,h)anthracene	---	18 U	18	3.9	19 U	19	4.1	19 U	19	4.0	18 U	18	3.9	20 U	20	4.2
Benzo(g,h,i)perylene	---	18 U	18	4.0	19 U	19	4.2	19 U	19	4.1	18 U	18	4.0	20 U	20	4.3
1-Methylnaphthalene	16,000	18 U	18	2.4	19 U	19	2.5	19 U	19	2.5	18 U	18	2.4	20 U	20	2.6
Total Benzofluoranthenes	---	18 U	18	2.5	19 U	19	2.6	19 U	19	2.6	**18**	18	2.5	20 U	20	2.7
cPAH TEQ	15	**0.22**	NA	NA	ND	NA	NA	ND	NA	NA	**3** J	NA	NA	ND	NA	NA
PAHs (µg/kg)																
Method SW8270D-SIM																
Naphthalene	2,100	4.4 U	4.4	2.3	4.6 U	4.6	2.4	**2.5** J1	4.7	2.5	**4.8**	4.6	2.4	4.8 U	4.8	2.5
2-Methylnaphthalene	320,000	**2.9** J1	4.4	1.3	4.6 U	4.6	1.4	4.7 U	4.7	1.4	**4.3** J1	4.6	1.4	4.8 U	4.8	1.5
1-Methylnaphthalene	16,000	**2.2** J1	4.4	1.5	4.6 U	4.6	1.6	4.7 U	4.7	1.6	**3.7** J1	4.6	1.6	4.8 U	4.8	1.7
Total Naphthalenes	---	**5.1** J1	NA	NA	4.6 U	NA	NA	**2.5** J1	NA	NA	**12.8** J1	NA	NA	4.8 U	NA	NA
Acenaphthylene	---	4.4 U	4.4	1.1	4.6 U	4.6	1.2	4.7 U	4.7	1.2	4.6 U	4.6	1.1	4.8 U	4.8	1.2
Acenaphthene	230,000	4.4 U	4.4	1.2	4.6 U	4.6	1.2	4.7 U	4.7	1.2	4.6 U	4.6	1.2	4.8 U	4.8	1.3
Fluorene	150,000	4.4 U	4.4	1.1	4.6 U	4.6	1.2	4.7 U	4.7	1.2	4.6 U	4.6	1.2	4.8 U	4.8	1.2
Phenanthrene	---	**8.4**	4.4	1.7	**3.4** J1	4.6	1.8	**3.8** J1	4.7	1.9	**12**	4.6	1.8	**6.1**	4.8	1.9
Anthracene	1,600,000	4.4 U	4.4	1.3	4.6 U	4.6	1.3	4.7 U	4.7	1.4	4.6 U	4.6	1.3	4.8 U	4.8	1.4
Fluoranthene	230,000	**3.6** J1	4.4	1.6	4.6 U	4.6	1.6	4.7 U	4.7	1.7	**20**	4.6	1.6	**2.8** J1	4.8	1.7
Pyrene	240,000	**4.1** J1	4.4	2.0	4.6 U	4.6	2.0	**2.4** J1	4.7	2.1	**18**	4.6	2.0	**3.9** J1	4.8	2.1
Benzo(a)anthracene	---	**2.8** J1	4.4	1.4	4.6 U	4.6	1.5	4.7 U	4.7	1.5	**10**	4.6	1.5	**2.7** J1	4.8	1.5
Chrysene	---	**14**	4.4	1.7	4.6 U	4.6	1.7	4.7 U	4.7	1.8	**16**	4.6	1.7	**14**	4.8	1.8
Benzo(a)pyrene	---	**10**	4.4	1.5	4.6 U	4.6	1.6	4.7 U	4.7	1.6	**15**	4.6	1.6	**3.7** J1	4.8	1.7
Indeno(1,2,3-cd)pyrene	---	4.4 U	4.4	3.1	4.6 U	4.6	3.2	4.7 U	4.7	3.2	**11**	4.6	3.2	4.8 U	4.8	3.3
Dibenz(a,h)anthracene	---	4.4 U	4.4	2.1	4.6 U	4.6	2.2	4.7 U	4.7	2.2	**4.4** J1	4.6	2.2	4.8 U	4.8	2.3
Benzo(g,h,i)perylene	---	**4.6**	4.4	2.7	4.6 U	4.6	2.8	4.7 U	4.7	2.9	**14**	4.6	2.8	**5.4**	4.8	2.9
Dibenzofuran	80,000	4.4 U	4.4	1.3	4.6 U	4.6	1.4	4.7 U	4.7	1.4	**2.4** J1	4.6	1.4	4.8 U	4.8	1.5
Total Benzofluoranthenes	---	4.4 U	4.4	1.6	4.6 U	4.6	1.7	4.7 U	4.7	1.7	**28**	4.6	1.7	4.8 U	4.8	1.8
cPAH TEQ	15	**10.4** J	NA	NA	ND	NA	NA	ND	NA	NA	**21** J	NA	NA	**4.1** J	NA	NA

TABLE M-2
DIRECT-PUSH SOIL BORINGS SOIL ANALYTICAL RESULTS
BOEING ISAACSON-THOMPSON
REMEDIAL INVESTIGATION

	Preliminary Cleanup Level	IT-SB-10(5-6.5) TU90Q 11/01/2011			IT-SB-10(8-9.5) TU90T 11/01/2011			IT-SB-10(13.5-15) TU90S 11/01/2011			IT-SB-11(2-3.5) TX02A 11/14/2011			IT-SB-11(5-6.5) TX02B 11/14/2011		
		Result	Reporting Limit	Detection Limit	Result	Reporting Limit	Detection Limit	Result	Reporting Limit	Detection Limit	Result	Reporting Limit	Detection Limit	Result	Reporting Limit	Detection Limit
PCBs (µg/kg)																
Method SW8082																
Aroclor 1016	0.72	30 U	30	1.8	33 U	33	2.0	31 U	31	1.9	32 U	32	1.9	30 U	30	1.9
Aroclor 1242	0.72	30 U	30	2.2	33 U	33	2.4	31 U	31	2.3	32 U	32	2.3	30 U	30	2.3
Aroclor 1248	220	30 U	30	2.2	33 U	33	2.4	31 U	31	2.3	32 U	32	2.3	30 U	30	2.3
Aroclor 1254	0.29	30 U	30	2.2	33 U	33	2.4	31 U	31	2.3	32 U	32	2.3	30 U	30	2.3
Aroclor 1260	5.4	30 U	30	2.2	33 U	33	2.4	31 U	31	2.3	32 U	32	2.3	30 U	30	2.3
Aroclor 1221	---	30 U	30	2.2	33 U	33	2.4	31 U	31	2.3	32 U	32	2.3	30 U	30	2.3
Aroclor 1232	---	30 U	30	2.2	33 U	33	2.4	31 U	31	2.3	32 U	32	2.3	30 U	30	2.3
Total PCBs	1.8	ND	NA	NA	ND	NA	NA	ND	NA	NA	ND	NA	NA	ND	NA	NA
TOTAL PETROLEUM HYDROCARBONS (mg/kg)																
NWTPH-Dx																
Diesel-Range Organics	2,000	**7.5**	5.5	1.4	5.7 U	5.7	1.5	6.7 U	6.7	1.7	5.8 U	5.8	1.5	5.4 U	5.4	1.4
Oil-Range Organics	2,000	**47**	11	1.7	11 U	11	1.8	13 U	13	2.1	12 U	12	1.8	**30**	11	1.7
NWTPH-G																
Gasoline-Range Organics	100/30	5.6 U	5.6	2.7	8.4 U	8.4	4.0	9.3 U	9.3	4.5	8.2 U	8.2	3.9	7.0 U	7.0	3.3
TOTAL METALS (mg/kg)																
Methods 200.8/7471A/SW7196A																
Antimony	5	0.2 U	0.2	0.014	0.2 U	0.2	0.014	0.3 U	0.3	0.018	0.2 UJ	0.2	0.015	0.2 U	0.2	0.014
Arsenic	7	**2.7**	0.2	0.094	**2.1**	0.2	0.092	**187**	0.3	0.12	**501**	1	0.50	**209**	0.2	0.091
Barium	640	**35.0**	0.5	0.060	**36.1**	0.5	0.059	**47.0**	0.7	0.076	**58.2** J	0.6	0.064	**28.4**	0.5	0.058
Beryllium	160	0.2 U	0.2	0.019	0.2 U	0.2	0.019	0.3 U	0.3	0.024	**0.2**	0.2	0.021	0.2 U	0.2	0.019
Cadmium	1.3	0.1 U	0.1	0.013	0.1 U	0.1	0.013	0.1 U	0.1	0.016	**0.3**	0.1	0.014	0.1 U	0.1	0.013
Chromium	1,480	**9.3**	0.5	0.041	**10.5**	0.5	0.040	**12.6**	0.7	0.051	**16.0**	0.6	0.043	**8.6**	0.5	0.040
Chromium VI	3.8	**0.429**	0.429	0.030	0.436 U	0.436	0.030	0.536 U	0.536	0.030	0.464 UJ	0.464	0.030	0.427 U	0.427	0.030
Copper	36	**12.9**	0.5	0.039	**14.8**	0.5	0.038	**490**	3	0.24	**1170**	3	0.21	**51.8**	0.5	0.038
Lead	250	**1.9**	0.1	0.051	**1.6**	0.1	0.050	**2.3**	0.1	0.063	**14.4**	0.1	0.054	**1.6**	0.1	0.049
Mercury	1.5	0.03 U	0.03	0.0013	0.02 U	0.02	0.0012	0.03 U	0.03	0.0016	**0.08** J	0.02	0.0012	0.02 U	0.02	0.0013
Nickel	210	**8.5**	0.5	0.053	**9.0**	0.5	0.052	**9.4**	0.7	0.066	**20.6**	0.6	0.056	**8.3**	0.5	0.051
Selenium	1.0	0.5 U	0.5	0.11	0.5 U	0.5	0.11	0.7 U	0.7	0.13	0.6 U	0.6	0.11	0.5 U	0.5	0.10
Silver	170	0.2 U	0.2	0.0086	0.2 U	0.2	0.0085	0.3 U	0.3	0.011	0.2 U	0.2	0.0091	0.2 U	0.2	0.0083
Thallium	0.67	0.2 U	0.2	0.0032	0.2 U	0.2	0.0032	0.3 U	0.3	0.0041	0.2 U	0.2	0.0034	0.2 U	0.2	0.0031
Zinc	1,400	**24**	4	0.36	**23**	4	0.36	**272**	5	0.46	**195**	5	0.39	**268**	4	0.35

TABLE M-2
DIRECT-PUSH SOIL BORINGS SOIL ANALYTICAL RESULTS
BOEING ISAACSON-THOMPSON
REMEDIAL INVESTIGATION

	Preliminary Cleanup Level	IT-SB-11(8-9) TX02C 11/14/2011			IT-SB-11(14-15.5) TX02D 11/14/2011			IT-SB-12(2-3.5) TX02K 11/14/2011			IT-SB-12(5-6.5) TX01J 11/14/2011			IT-SB-12(8-9.5) TX01K 11/14/2011		
		Result	Reporting Limit	Detection Limit	Result	Reporting Limit	Detection Limit	Result	Reporting Limit	Detection Limit	Result	Reporting Limit	Detection Limit	Result	Reporting Limit	Detection Limit
VOLATILES (µg/kg)																
Method SW8260C																
Chloromethane	1,600	1.2 U	1.2	0.33	1.2 U	1.2	0.31	1.2 U	1.2	0.32	1.4 UJ	1.4	0.36	1.5 UJ	1.5	0.39
Bromomethane	---	1.2 UJ	1.2	0.23	1.2 UJ	1.2	0.22	1.2 UJ	1.2	0.23	1.4 UJ	1.4	0.25	1.5 UJ	1.5	0.28
Vinyl Chloride	7.4	1.2 U	1.2	0.29	1.2 U	1.2	0.28	1.2 U	1.2	0.29	1.4 U	1.4	0.32	1.5 U	1.5	0.35
Chloroethane	280,000	1.2 U	1.2	0.58	1.2 U	1.2	0.54	1.2 U	1.2	0.57	1.4 UJ	1.4	0.63	1.5 UJ	1.5	0.69
Methylene Chloride	2400	**1.3** J1	2.5	0.79	**0.9** J1	2.4	0.75	**1.3** J1	2.5	0.78	**2.0** J, J1	2.7	0.86	**2.2** J, J1	3.0	0.94
Acetone	510,000	**22** J	6.2	0.60	**9.0** J	5.9	0.57	**41** J	6.1	0.59	**27** J	6.8	0.65	**120** J	7.4	0.72
Carbon Disulfide	75,000	1.2 U	1.2	0.70	1.2 U	1.2	0.66	**1.9**	1.2	0.69	**18**	1.4	0.76	**2.5**	1.5	0.83
1,1-Dichloroethene	81	1.2 U	1.2	0.42	1.2 U	1.2	0.40	1.2 U	1.2	0.41	1.4 U	1.4	0.46	1.5 U	1.5	0.50
1,1-Dichloroethane	710	1.2 U	1.2	0.25	1.2 U	1.2	0.24	1.2 U	1.2	0.25	1.4 UJ	1.4	0.28	1.5 UJ	1.5	0.30
trans-1,2-Dichloroethene	19,000	1.2 UJ	1.2	0.33	1.2 UJ	1.2	0.31	1.2 UJ	1.2	0.33	1.4 U	1.4	0.36	1.5 U	1.5	0.39
cis-1,2-Dichloroethene	2,600	1.2 U	1.2	0.30	1.2 U	1.2	0.28	1.2 U	1.2	0.29	1.4 U	1.4	0.33	1.5 U	1.5	0.36
Chloroform	200	1.2 U	1.2	0.29	1.2 U	1.2	0.28	1.2 U	1.2	0.29	1.4 U	1.4	0.32	1.5 U	1.5	0.35
1,2-Dichloroethane	70	1.2 U	1.2	0.24	1.2 U	1.2	0.22	1.2 U	1.2	0.23	1.4 U	1.4	0.26	1.5 U	1.5	0.28
2-Butanone	430,000	6.2 U	6.2	0.64	5.9 U	5.9	0.60	**3.4** J1	6.1	0.63	6.8 U	6.8	0.70	**19**	7.4	0.76
1,1,1-Trichloroethane	1,900,000	1.2 U	1.2	0.28	1.2 U	1.2	0.27	1.2 U	1.2	0.28	1.4 U	1.4	0.31	1.5 U	1.5	0.34
Carbon Tetrachloride	21	1.2 U	1.2	0.27	1.2 U	1.2	0.25	1.2 U	1.2	0.26	1.4 U	1.4	0.29	1.5 U	1.5	0.32
Vinyl Acetate	---	6.2 U	6.2	0.48	5.9 U	5.9	0.45	6.1 U	6.1	0.47	6.8 U	6.8	0.52	7.4 U	7.4	0.57
Bromodichloromethane	89	1.2 U	1.2	0.32	1.2 U	1.2	0.30	1.2 U	1.2	0.31	1.4 U	1.4	0.34	1.5 U	1.5	0.38
1,2-Dichloropropane	92	1.2 U	1.2	0.20	1.2 U	1.2	0.19	1.2 U	1.2	0.20	1.4 U	1.4	0.22	1.5 U	1.5	0.24
cis-1,3-Dichloropropene	---	1.2 U	1.2	0.28	1.2 U	1.2	0.27	1.2 U	1.2	0.28	1.4 U	1.4	0.31	1.5 U	1.5	0.34
Trichloroethene	51	**1.9**	1.2	0.26	**1.2**	1.2	0.25	**0.8** J1	1.2	0.26	**1.0** J1	1.4	0.29	**2.2**	1.5	0.31
Dibromochloromethane	---	1.2 U	1.2	0.33	1.2 U	1.2	0.31	1.2 U	1.2	0.33	1.4 U	1.4	0.36	1.5 U	1.5	0.39
1,1,2-Trichloroethane	73	1.2 U	1.2	0.36	1.2 U	1.2	0.34	1.2 U	1.2	0.35	1.4 U	1.4	0.39	1.5 U	1.5	0.42
Benzene	93	1.2 U	1.2	0.37	**0.7** J1	1.2	0.35	**1.2** J1	1.2	0.36	1.4 U	1.4	0.40	**1.1** J1	1.5	0.44
trans-1,3-Dichloropropene	---	1.2 U	1.2	0.27	1.2 U	1.2	0.25	1.2 U	1.2	0.26	1.4 U	1.4	0.29	1.5 U	1.5	0.32
2-Chloroethylvinylether	---	6.2 U	6.2	0.34	5.9 U	5.9	0.32	6.1 U	6.1	0.34	6.8 U	6.8	0.37	7.4 U	7.4	0.41
Bromoform	---	1.2 U	1.2	0.37	1.2 U	1.2	0.35	1.2 U	1.2	0.36	1.4 U	1.4	0.40	1.5 U	1.5	0.44
4-Methyl-2-Pentanone (MIBK)	170,000	6.2 U	6.2	0.52	5.9 U	5.9	0.49	6.1 U	6.1	0.51	6.8 U	6.8	0.57	7.4 U	7.4	0.62
2-Hexanone	32,000	6.2 U	6.2	0.55	5.9 U	5.9	0.52	6.1 U	6.1	0.54	6.8 U	6.8	0.59	7.4 U	7.4	0.65
Tetrachloroethene	260	1.2 U	1.2	0.32	1.2 U	1.2	0.30	1.2 U	1.2	0.31	1.4 U	1.4	0.35	1.5 U	1.5	0.38
1,1,2,2-Tetrachloroethane	13	1.2 U	1.2	0.32	1.2 U	1.2	0.30	1.2 U	1.2	0.31	1.4 U	1.4	0.34	1.5 U	1.5	0.38
Toluene	100,000	1.2 U	1.2	0.19	1.2 U	1.2	0.18	**0.8** J1	1.2	0.19	1.4 U	1.4	0.20	1.5 U	1.5	0.22
Chlorobenzene	26,000	1.2 U	1.2	0.27	1.2 U	1.2	0.26	1.2 U	1.2	0.27	1.4 U	1.4	0.30	1.5 U	1.5	0.32
Ethylbenzene	230	1.2 U	1.2	0.25	1.2 U	1.2	0.24	1.2 U	1.2	0.25	1.4 U	1.4	0.27	1.5 U	1.5	0.30
Styrene	16,000,000	1.2 U	1.2	0.17	1.2 U	1.2	0.16	1.2 U	1.2	0.17	1.4 U	1.4	0.19	1.5 U	1.5	0.20
Trichlorofluoromethane	200,000	**0.8** J1	1.2	0.33	**0.8** J1	1.2	0.31	1.2 U	1.2	0.33	1.4 U	1.4	0.36	1.5 U	1.5	0.39
1,1,2-Trichloro-1,2,2-trifuoroethane	1,000,000,000	2.5 U	2.5	0.36	2.4 U	2.4	0.34	2.5 U	2.5	0.35	2.7 U	2.7	0.39	3.0 U	3.0	0.43
m,p-Xylene	160,000	1.2 U	1.2	0.49	1.2 U	1.2	0.46	1.2 U	1.2	0.48	1.4 U	1.4	0.53	1.5 U	1.5	0.58
o-Xylene	200,000	1.2 U	1.2	0.28	1.2 U	1.2	0.26	1.2 U	1.2	0.27	1.4 U	1.4	0.30	1.5 U	1.5	0.33
1,2-Dichlorobenzene	68,000	1.2 U	1.2	0.37	1.2 U	1.2	0.34	1.2 U	1.2	0.36	1.4 U	1.4	0.40	1.5 U	1.5	0.43
1,3-Dichlorobenzene	3,840	1.2 U	1.2	0.28	1.2 U	1.2	0.27	1.2 U	1.2	0.28	1.4 U	1.4	0.31	1.5 U	1.5	0.34
1,4-Dichlorobenzene	3,500	1.2 U	1.2	0.29	1.2 U	1.2	0.27	1.2 U	1.2	0.28	1.4 U	1.4	0.31	1.5 U	1.5	0.34
Acrolein	---	62 UJ	62	4.8	59 UJ	59	4.5	61 UJ	61	4.7	68 UJ	68	5.2	74 UJ	74	5.7
Methyl Iodide	---	1.2 U	1.2	0.27	1.2 U	1.2	0.25	1.2 U	1.2	0.26	1.4 U	1.4	0.29	1.5 U	1.5	0.32
Bromoethane	---	2.5 U	2.5	0.55	2.4 U	2.4	0.52	2.5 U	2.5	0.54	2.7 U	2.7	0.60	3.0 U	3.0	0.65
Acrylonitrile	---	6.2 U	6.2	1.3	5.9 U	5.9	1.2	6.1 U	6.1	1.3	6.8 U	6.8	1.4	7.4 U	7.4	1.5
1,1-Dichloropropene	---	1.2 U	1.2	0.39	1.2 U	1.2	0.37	1.2 U	1.2	0.38	1.4 U	1.4	0.42	1.5 U	1.5	0.46
Dibromomethane	---	1.2 U	1.2	0.18	1.2 U	1.2	0.17	1.2 U	1.2	0.18	1.4 U	1.4	0.20	1.5 U	1.5	0.22
1,1,1,2-Tetrachloroethane	---	1.2 U	1.2	0.29	1.2 U	1.2	0.27	1.2 U	1.2	0.29	1.4 U	1.4	0.32	1.5 U	1.5	0.35
1,2-Dibromo-3-chloropropane	---	6.2 U	6.2	0.73	5.9 U	5.9	0.69	6.1 U	6.1	0.72	6.8 U	6.8	0.79	7.4 U	7.4	0.87
1,2,3-Trichloropropane	---	2.5 U	2.5	0.65	2.4 U	2.4	0.61	2.5 U	2.5	0.63	2.7 U	2.7	0.70	3.0 U	3.0	0.77
trans-1,4-Dichloro-2-butene	---	6.2 U	6.2	0.55	5.9 U	5.9	0.51	6.1 U	6.1	0.54	6.8 U	6.8	0.59	7.4 U	7.4	0.65
1,3,5-Trimethylbenzene	800,000	1.2 U	1.2	0.32	1.2 U	1.2	0.30	1.2 U	1.2	0.31	1.4 U	1.4	0.34	1.5 U	1.5	0.38
1,2,4-Trimethylbenzene	800,000	1.2 U	1.2	0.29	1.2 U	1.2	0.27	1.2 U	1.2	0.28	1.4 U	1.4	0.31	1.5 U	1.5	0.34
Hexachlorobutadiene	---	6.2 U	6.2	0.51	5.9 U	5.9	0.48	6.1 U	6.1	0.50	6.8 U	6.8	0.56	7.4 U	7.4	0.61
Ethylene Dibromide	---	1.2 U	1.2	0.22	1.2 U	1.2	0.21	1.2 U	1.2	0.22	1.4 U	1.4	0.24	1.5 U	1.5	0.26
Bromochloromethane	---	1.2 UJ	1.2	0.40	1.2 UJ	1.2	0.38	1.2 UJ	1.2	0.40	1.4 U	1.4	0.44	1.5 U	1.5	0.48

TABLE M-2
DIRECT-PUSH SOIL BORINGS SOIL ANALYTICAL RESULTS
BOEING ISAACSON-THOMPSON
REMEDIAL INVESTIGATION

	Preliminary Cleanup Level	IT-SB-11(8-9) TX02C 11/14/2011			IT-SB-11(14-15.5) TX02D 11/14/2011			IT-SB-12(2-3.5) TX02K 11/14/2011			IT-SB-12(5-6.5) TX01J 11/14/2011			IT-SB-12(8-9.5) TX01K 11/14/2011		
		Result	Reporting Limit	Detection Limit	Result	Reporting Limit	Detection Limit	Result	Reporting Limit	Detection Limit	Result	Reporting Limit	Detection Limit	Result	Reporting Limit	Detection Limit
2,2-Dichloropropane	---	1.2 U	1.2	0.36	1.2 U	1.2	0.34	1.2 U	1.2	0.36	1.4 U	1.4	0.40	1.5 U	1.5	0.43
1,3-Dichloropropane	---	1.2 U	1.2	0.26	1.2 U	1.2	0.25	1.2 U	1.2	0.26	1.4 U	1.4	0.28	1.5 U	1.5	0.31
Isopropylbenzene	78,000	1.2 U	1.2	0.29	1.2 U	1.2	0.27	1.2 U	1.2	0.29	1.4 U	1.4	0.32	1.5 U	1.5	0.35
n-Propylbenzene	11,000	1.2 U	1.2	0.34	1.2 U	1.2	0.32	1.2 U	1.2	0.33	1.4 U	1.4	0.37	1.5 U	1.5	0.40
Bromobenzene	---	1.2 U	1.2	0.19	1.2 U	1.2	0.18	1.2 U	1.2	0.19	1.4 U	1.4	0.21	1.5 U	1.5	0.23
2-Chlorotoluene	---	1.2 U	1.2	0.38	1.2 U	1.2	0.35	1.2 U	1.2	0.37	1.4 U	1.4	0.41	1.5 U	1.5	0.45
4-Chlorotoluene	400,000	1.2 U	1.2	0.35	1.2 U	1.2	0.33	1.2 U	1.2	0.34	1.4 U	1.4	0.38	1.5 U	1.5	0.41
tert-Butylbenzene	---	1.2 U	1.2	0.38	1.2 U	1.2	0.36	1.2 U	1.2	0.38	1.4 U	1.4	0.41	1.5 U	1.5	0.45
sec-Butylbenzene	---	1.2 U	1.2	0.30	1.2 U	1.2	0.28	1.2 U	1.2	0.29	1.4 U	1.4	0.33	1.5 U	1.5	0.36
4-Isopropyltoluene	---	1.2 U	1.2	0.30	1.2 U	1.2	0.28	1.2 U	1.2	0.29	1.4 U	1.4	0.32	1.5 U	1.5	0.35
n-Butylbenzene	27,000	1.2 U	1.2	0.33	1.2 U	1.2	0.31	1.2 U	1.2	0.32	1.4 U	1.4	0.36	1.5 U	1.5	0.39
1,2,4-Trichlorobenzene	80	6.2 U	6.2	0.42	5.9 U	5.9	0.39	6.1 U	6.1	0.41	6.8 U	6.8	0.45	7.4 U	7.4	0.49
Naphthalene	2,100	6.2 U	6.2	0.54	5.9 U	5.9	0.50	6.1 U	6.1	0.53	6.8 U	6.8	0.58	7.4 U	7.4	0.64
1,2,3-Trichlorobenzene	---	6.2 U	6.2	0.38	5.9 U	5.9	0.36	6.1 U	6.1	0.37	6.8 U	6.8	0.41	7.4 U	7.4	0.45
SEMIVOLATILES (µg/kg)																
Method SW8270D																
Phenol	1,900,000	19 U	19	8.1	20 U	20	8.4	19 U	19	8.1	19 U	19	8.2	17 U	17	7.5
Bis-(2-Chloroethyl) Ether	---	19 U	19	3.1	20 U	20	3.3	19 U	19	3.1	19 U	19	3.2	17 U	17	2.9
2-Chlorophenol	---	19 U	19	2.2	20 U	20	2.3	19 U	19	2.2	19 U	19	2.3	17 U	17	2.1
1,3-Dichlorobenzene	3,840	19 U	19	2.5	20 U	20	2.6	19 U	19	2.5	19 U	19	2.5	17 U	17	2.3
1,4-Dichlorobenzene	3,500	19 U	19	2.7	20 U	20	2.8	19 U	19	2.7	19 U	19	2.7	17 U	17	2.5
Benzyl Alcohol	8,000,000	19 U	19	5.7	20 U	20	5.9	19 U	19	5.7	19 UJ	19	5.8	17 UJ	17	5.3
1,2-Dichlorobenzene	68,000	19 U	19	2.3	20 U	20	2.4	19 U	19	2.3	19 U	19	2.4	17 U	17	2.2
2-Methylphenol	250,000	19 U	19	4.9	20 U	20	5.1	19 U	19	4.9	19 U	19	5.0	17 U	17	4.6
2,2'-Oxybis(1-Chloropropane)	---	19 U	19	3.5	20 U	20	3.7	19 U	19	3.5	19 U	19	3.6	17 U	17	3.3
4-Methylphenol	41,000	38 U	38	6.2	39 U	39	6.5	37 U	37	6.2	38 U	38	6.3	35 U	35	5.8
N-Nitroso-Di-N-Propylamine	---	19 U	19	3.2	20 U	20	3.3	19 U	19	3.1	19 U	19	3.2	17 U	17	2.9
Hexachloroethane	---	19 U	19	2.8	20 U	20	2.9	19 U	19	2.7	19 U	19	2.8	17 U	17	2.6
Nitrobenzene	---	19 U	19	3.8	20 U	20	4.0	19 U	19	3.8	19 U	19	3.9	17 U	17	3.5
Isophorone	---	19 U	19	2.7	20 U	20	2.8	19 U	19	2.7	19 U	19	2.7	17 U	17	2.5
2-Nitrophenol	---	94 U	94	36	98 U	98	38	94 U	94	36	95 U	95	37	87 U	87	34
2,4-Dimethylphenol	95,000	38 U	38	3.2	39 U	39	3.4	37 U	37	3.2	38 U	38	3.3	35 U	35	3.0
Benzoic Acid	9,000	380 U	380	95	390 U	390	99	370 U	370	94	380 U	380	96	350 U	350	88
bis(2-Chloroethoxy) Methane	---	19 U	19	1.9	20 U	20	2.0	19 U	19	1.9	19 U	19	1.9	17 U	17	1.7
2,4-Dichlorophenol	---	190 U	190	20	200 U	200	21	190 U	190	20	190 U	190	20	170 U	170	19
1,2,4-Trichlorobenzene	80	19 U	19	3.3	20 U	20	3.4	19 U	19	3.3	19 U	19	3.3	17 U	17	3.0
Naphthalene	2,100	19 U	19	2.6	20 U	20	2.7	**15** J1	19	2.6	19 U	19	2.6	17 U	17	2.4
4-Chloroaniline	---	250 U	250	21	260 U	260	22	250 U	250	21	260 U	260	21	240 U	240	19
Hexachlorobutadiene	---	94 U	94	4.3	98 U	98	4.5	94 U	94	4.3	95 U	95	4.4	87 U	87	4.0
4-Chloro-3-methylphenol	740,000	94 U	94	14	98 U	98	15	94 U	94	14	95 U	95	14	87 U	87	13
2-Methylnaphthalene	320,000	19 U	19	2.9	20 U	20	3.0	**13** J1	19	2.9	19 U	19	2.9	17 U	17	2.7
Hexachlorocyclopentadiene	---	380 U	380	62	390 U	390	65	370 U	370	62	380 U	380	63	350 U	350	58
2,4,6-Trichlorophenol	---	94 U	94	21	98 U	98	22	94 U	94	21	95 U	95	21	87 U	87	19
2,4,5-Trichlorophenol	---	94 U	94	20	98 U	98	21	94 U	94	20	95 U	95	20	87 U	87	19
2-Chloronaphthalene	---	19 U	19	2.5	20 U	20	2.6	19 U	19	2.5	19 U	19	2.5	17 U	17	2.3
2-Nitroaniline	---	94 U	94	17	98 U	98	18	94 U	94	17	95 U	95	18	87 U	87	16
Dimethylphthalate	71	19 U	19	2.7	20 U	20	2.8	19 U	19	2.7	19 U	19	2.8	17 U	17	2.5
Acenaphthylene	---	19 U	19	5.4	20 U	20	5.6	19 U	19	5.3	19 U	19	5.4	17 U	17	5.0
3-Nitroaniline	---	94 U	94	21	98 U	98	22	94 U	94	21	95 U	95	21	87 U	87	20
Acenaphthene	230,000	19 U	19	3.1	20 U	20	3.2	19 U	19	3.1	19 U	19	3.1	17 U	17	2.9
2,4-Dinitrophenol	---	800 UJ	800	100	830 UJ	830	110	790 UJ	790	100	810 UJ	810	110	740 UJ	740	97
4-Nitrophenol	---	94 U	94	33	98 U	98	34	94 U	94	32	95 U	95	33	87 U	87	30
Dibenzofuran	80,000	19 U	19	3.8	20 U	20	4.0	19 U	19	3.8	19 U	19	3.9	17 U	17	3.6
2,6-Dinitrotoluene	---	94 U	94	29	98 U	98	30	94 U	94	29	95 U	95	29	87 U	87	27
2,4-Dinitrotoluene	---	94 U	94	18	98 U	98	19	94 U	94	18	95 U	95	19	87 U	87	17
Diethylphthalate	178,000	47 U	47	34	49 U	49	36	47 U	47	34	48 U	48	35	44 U	44	32
4-Chlorophenyl-phenylether	---	19 U	19	5.0	20 U	20	5.2	19 U	19	4.9	19 U	19	5.0	17 U	17	4.6
Fluorene	150,000	19 U	19	4.1	20 U	20	4.2	19 U	19	4.1	19 U	19	4.1	17 U	17	3.8
4-Nitroaniline	---	94 U	94	36	98 U	98	37	94 U	94	35	95 U	95	36	87 U	87	33

TABLE M-2
DIRECT-PUSH SOIL BORINGS SOIL ANALYTICAL RESULTS
BOEING ISAACSON-THOMPSON
REMEDIAL INVESTIGATION

	Preliminary Cleanup Level	IT-SB-11(8-9) TX02C 11/14/2011			IT-SB-11(14-15.5) TX02D 11/14/2011			IT-SB-12(2-3.5) TX02K 11/14/2011			IT-SB-12(5-6.5) TX01J 11/14/2011			IT-SB-12(8-9.5) TX01K 11/14/2011		
		Result	Reporting Limit	Detection Limit	Result	Reporting Limit	Detection Limit	Result	Reporting Limit	Detection Limit	Result	Reporting Limit	Detection Limit	Result	Reporting Limit	Detection Limit
4,6-Dinitro-2-Methylphenol	---	190 U	190	20	200 U	200	21	190 U	190	20	190 U	190	20	170 U	170	18
N-Nitrosodiphenylamine	204,000	19 U	19	5.1	20 U	20	5.3	19 U	19	5.0	19 U	19	5.1	17 U	17	4.7
4-Bromophenyl-phenylether	---	19 U	19	4.7	20 U	20	4.9	19 U	19	4.7	19 U	19	4.8	17 U	17	4.4
Hexachlorobenzene	---	19 U	19	4.0	20 U	20	4.2	19 U	19	4.0	19 U	19	4.1	17 U	17	3.7
Pentachlorophenol	---	190 U	190	45	200 U	200	47	190 U	190	45	190 U	190	46	170 U	170	42
Phenanthrene	---	19 U	19	3.4	20 U	20	3.6	**58**	19	3.4	**44**	19	3.5	**20**	17	3.2
Carbazole	50,000	19 U	19	2.5	20 U	20	2.6	19 U	19	2.5	19 U	19	2.6	17 U	17	2.3
Anthracene	1,600,000	19 U	19	4.2	20 U	20	4.4	**17** J1	19	4.2	19 U	19	4.3	17 U	17	3.9
Di-n-Butylphthalate	26,000	**10** J1	19	7.7	**17** J1	20	8.0	**34**	19	7.6	19 U	19	7.8	17 U	17	7.1
Fluoranthene	230,000	19 U	19	2.7	20 U	20	2.8	**120**	19	2.7	**70**	19	2.8	**17**	17	2.5
Pyrene	240,000	19 U	19	1.8	20 U	20	1.9	**200** J	19	1.8	**82**	19	1.8	**16** J1	17	1.7
Butylbenzylphthalate	1,700	19 U	19	5.8	20 U	20	6.0	19 U	19	5.7	19 U	19	5.9	17 U	17	5.3
3,3'-Dichlorobenzidine	---	140 U	140	17	150 U	150	17	140 U	140	17	140 UJ	140	17	130 UJ	130	15
Benzo(a)anthracene	---	19 U	19	3.1	20 U	20	3.2	**87**	19	3.1	**37**	19	3.1	17 U	17	2.9
bis(2-Ethylhexyl)phthalate	56,600	24 U	24	14	33 U	24	14	46 U	23	14	**24**	24	14	**15** J1	22	13
Chrysene	---	19 U	19	3.5	20 U	20	3.7	**120**	19	3.5	**50**	19	3.6	**10** J1	17	3.3
Di-n-Octyl phthalate	---	19 U	19	5.5	20 U	20	5.7	19 U	19	5.5	19 U	19	5.6	17 U	17	5.1
Benzo(a)pyrene	---	19 U	19	5.1	20 U	20	5.3	**94**	19	5.1	**34**	19	5.2	17 U	17	4.7
Indeno(1,2,3-cd)pyrene	---	19 U	19	4.4	20 U	20	4.6	**58**	19	4.4	19 U	19	4.5	17 U	17	4.1
Dibenz(a,h)anthracene	---	19 U	19	4.0	20 U	20	4.2	**19**	19	4.0	19 U	19	4.1	17 U	17	3.8
Benzo(g,h,i)perylene	---	19 U	19	4.1	20 U	20	4.3	**84**	19	4.1	**17** J1	19	4.2	17 U	17	3.8
1-Methylnaphthalene	16,000	19 U	19	2.5	20 U	20	2.6	**9.4** J1	19	2.5	19 U	19	2.6	17 U	17	2.3
Total Benzofluoranthenes	---	19 U	19	2.6	20 U	20	2.7	**180**	19	2.6	**69**	19	2.6	**11** J1	17	2.4
cPAH TEQ	15	ND	NA	NA	ND	NA	NA	**130**	NA	NA	**45**	NA	NA	**1.2** J	NA	NA
PAHs (µg/kg)																
Method SW8270D-SIM																
Naphthalene	2,100	4.9 U	4.9	2.6	**3.0** J1	4.7	2.5	**18**	4.7	2.5	**9.8**	4.8	2.5	**7.7**	4.6	2.4
2-Methylnaphthalene	320,000	4.9 U	4.9	1.5	**3.6** J1	4.7	1.4	**18**	4.7	1.4	**12**	4.8	1.5	**9.4**	4.6	1.4
1-Methylnaphthalene	16,000	**2.7** J1	4.9	1.7	**3.3** J1	4.7	1.6	**14**	4.7	1.6	**9.0**	4.8	1.6	**6.9**	4.6	1.6
Total Naphthalenes	---	**2.7** J1	NA	NA	**9.9** J1	NA	NA	**50**	NA	NA	**30.8**	NA	NA	**24**	NA	NA
Acenaphthylene	---	4.9 U	4.9	1.2	4.7 U	4.7	1.2	**4.5** J1	4.7	1.2	**3.7** J1	4.8	1.2	4.6 U	4.6	1.2
Acenaphthene	230,000	4.9 U	4.9	1.3	4.7 U	4.7	1.2	4.7 U	4.7	1.2	**7.1**	4.8	1.3	4.6 U	4.6	1.2
Fluorene	150,000	4.9 U	4.9	1.3	4.7 U	4.7	1.2	**3.1** J1	4.7	1.2	4.8 U	4.8	1.2	4.6 U	4.6	1.2
Phenanthrene	---	**2.6** J1	4.9	1.9	**7.8**	4.7	1.9	**74**	4.7	1.9	**230**	4.8	1.9	**30**	4.6	1.8
Anthracene	1,600,000	4.9 U	4.9	1.4	4.7 U	4.7	1.4	**17**	4.7	1.4	**58**	4.8	1.4	**2.8** J1	4.6	1.3
Fluoranthene	230,000	4.9 U	4.9	1.7	**4.1** J1	4.7	1.7	**200**	4.7	1.7	**180**	4.8	1.7	**25**	4.6	1.6
Pyrene	240,000	4.9 U	4.9	2.2	**4.6** J1	4.7	2.1	**230**	4.7	2.1	**120**	4.8	2.1	**20**	4.6	2.0
Benzo(a)anthracene	---	4.9 U	4.9	1.6	4.7 U	4.7	1.5	**110**	4.7	1.5	**43**	4.8	1.5	**7.3**	4.6	1.5
Chrysene	---	4.9 U	4.9	1.8	**7.6**	4.7	1.8	**140**	4.7	1.8	**67**	4.8	1.8	**14**	4.6	1.7
Benzo(a)pyrene	---	4.9 U	4.9	1.7	**3.7** J1	4.7	1.6	**110**	4.7	1.6	**37**	4.8	1.7	**6.1**	4.6	1.6
Indeno(1,2,3-cd)pyrene	---	4.9 U	4.9	3.4	4.7 U	4.7	3.2	**75**	4.7	3.3	**21**	4.8	3.3	**3.8** J1	4.6	3.2
Dibenz(a,h)anthracene	---	4.9 U	4.9	2.3	4.7 U	4.7	2.2	**26**	4.7	2.2	**7.5**	4.8	2.3	4.6 U	4.6	2.2
Benzo(g,h,i)perylene	---	4.9 U	4.9	3.0	**4.9**	4.7	2.9	**89**	4.7	2.9	**24**	4.8	2.9	**5.5**	4.6	2.8
Dibenzofuran	80,000	4.9 U	4.9	1.5	4.7 U	4.7	1.4	**9.8**	4.7	1.4	**14**	4.8	1.5	**3.8** J1	4.6	1.4
Total Benzofluoranthenes	---	4.9 U	4.9	1.8	4.7 U	4.7	1.7	**200**	4.7	1.7	**69**	4.8	1.8	**15**	4.6	1.7
cPAH TEQ	15	ND	NA	NA	**3.8** J	NA	NA	**153**	NA	NA	**52**	NA	NA	**8.9** J	NA	NA

TABLE M-2
DIRECT-PUSH SOIL BORINGS SOIL ANALYTICAL RESULTS
BOEING ISAACSON-THOMPSON
REMEDIAL INVESTIGATION

	Preliminary Cleanup Level	IT-SB-11(8-9) TX02C 11/14/2011			IT-SB-11(14-15.5) TX02D 11/14/2011			IT-SB-12(2-3.5) TX02K 11/14/2011			IT-SB-12(5-6.5) TX01J 11/14/2011			IT-SB-12(8-9.5) TX01K 11/14/2011		
		Result	Reporting Limit	Detection Limit	Result	Reporting Limit	Detection Limit	Result	Reporting Limit	Detection Limit	Result	Reporting Limit	Detection Limit	Result	Reporting Limit	Detection Limit
PCBs (µg/kg)																
Method SW8082																
Aroclor 1016	0.72	31 U	31	1.9	32 U	32	2.0	32 U	32	9.9	32 U	32	1.9	31 U	31	1.9
Aroclor 1242	0.72	31 U	31	2.3	32 U	32	2.4	32 U	32	12	32 U	32	2.3	31 U	31	2.3
Aroclor 1248	220	31 U	31	2.3	32 U	32	2.4	81 U	81	12	32 U	32	2.3	31 U	31	2.3
Aroclor 1254	0.29	31 U	31	2.3	32 U	32	2.4	**270**	32	12	32 U	32	2.3	31 U	31	2.3
Aroclor 1260	5.4	31 U	31	2.3	32 U	32	2.4	**160**	32	12	32 U	32	2.3	31 U	31	2.3
Aroclor 1221	---	31 U	31	2.3	32 U	32	2.4	32 U	32	12	32 U	32	2.3	31 U	31	2.3
Aroclor 1232	---	31 U	31	2.3	32 U	32	2.4	32 U	32	12	32 U	32	2.3	31 U	31	2.3
Total PCBs	1.8	ND	NA	NA	ND	NA	NA	**430**	NA	NA	ND	NA	NA	ND	NA	NA
TOTAL PETROLEUM HYDROCARBONS (mg/kg)																
NWTPH-Dx																
Diesel-Range Organics	2,000	5.4 U	5.4	1.4	6.0 U	6.0	1.5	**31** J	5.6	1.4	**26**	5.6	1.4	**12**	6.0	1.5
Oil-Range Organics	2,000	11 U	11	1.7	**26**	12	1.9	**62**	11	1.8	**38**	11	1.8	**14**	12	1.9
NWTPH-G																
Gasoline-Range Organics	100/30	6.6 U	6.6	3.1	7.4 U	7.4	3.5	5.7 U	5.7	2.7	8.2 U	8.2	3.9	9.6 U	9.6	4.6
TOTAL METALS (mg/kg)																
Methods 200.8/7471A/SW7196A																
Antimony	5	0.2 U	0.2	0.014	0.3 U	0.3	0.017	**0.3**	0.2	0.014	0.2 U	0.2	0.014	0.2 U	0.2	0.015
Arsenic	7	**15.4**	0.2	0.091	**43.5**	0.3	0.11	**12.3**	0.2	0.097	**10.4**	0.2	0.094	**9.2**	0.2	0.10
Barium	640	**30.7**	0.5	0.058	**55.3**	0.6	0.072	**257**	0.6	0.062	**206**	0.5	0.061	**130**	0.6	0.066
Beryllium	160	0.2 U	0.2	0.019	0.3 U	0.3	0.023	**0.2**	0.2	0.020	**0.8**	0.2	0.020	**0.4**	0.2	0.021
Cadmium	1.3	0.1 U	0.1	0.012	0.1 U	0.1	0.015	**2.2**	0.1	0.013	**2.4**	0.1	0.013	**2.7**	0.1	0.014
Chromium	1,480	**8.6**	0.5	0.040	**15.0**	0.6	0.049	**257**	0.6	0.042	**368**	3	0.21	**158**	0.6	0.045
Chromium VI	3.8	0.429 U	0.429	0.030	0.499 U	0.499	0.030	0.441 U	0.441	0.030	0.457 U	0.457	0.030	0.456 U	0.456	0.030
Copper	36	**11.1**	0.5	0.037	**63.2**	0.6	0.046	**66.7**	0.6	0.040	**61.3**	0.5	0.039	**47.1**	0.6	0.043
Lead	250	**1.4**	0.1	0.049	**3.7**	0.1	0.060	**261**	0.1	0.052	**222**	0.1	0.051	**219**	0.1	0.056
Mercury	1.5	0.02 U	0.02	0.0013	**0.03**	0.03	0.0016	**0.28**	0.03	0.0014	**0.06**	0.03	0.0014	**0.03**	0.02	0.0011
Nickel	210	**7.6**	0.5	0.051	**12.0**	0.6	0.063	**23.7**	0.6	0.055	**30.6**	0.5	0.053	**21.8**	0.6	0.058
Selenium	1.0	0.5 U	0.5	0.10	0.6 U	0.6	0.13	0.6 U	0.6	0.11	0.5 U	0.5	0.11	0.6 U	0.6	0.12
Silver	170	0.2 U	0.2	0.0083	0.3 U	0.3	0.010	0.3	0.3	0.0089	**0.4**	0.2	0.0087	**0.3**	0.3	0.0095
Thallium	0.67	0.2 U	0.2	0.0031	0.3 U	0.3	0.0038	0.2 U	0.2	0.0033	0.2 U	0.2	0.0033	0.2 U	0.2	0.0036
Zinc	1,400	**81**	4	0.35	**62**	5	0.43	**740**	20	1.9	**500**	20	1.8	**333**	5	0.40

TABLE M-2
DIRECT-PUSH SOIL BORINGS SOIL ANALYTICAL RESULTS
BOEING ISAACSON-THOMPSON
REMEDIAL INVESTIGATION

	Preliminary Cleanup Level	IT-SB-12(14-15.5) TX01L 11/14/2011		
		Result	Reporting Limit	Detection Limit
VOLATILES (µg/kg)				
Method SW8260C				
Chloromethane	1,600	1.2 UJ	1.2	0.32
Bromomethane	---	1.2 UJ	1.2	0.22
Vinyl Chloride	7.4	1.2 U	1.2	0.28
Chloroethane	280,000	1.2 UJ	1.2	0.55
Methylene Chloride	2400	**2.1** J, J1	2.4	0.76
Acetone	510,000	**12** J	6.0	0.58
Carbon Disulfide	75,000	**2.3**	1.2	0.67
1,1-Dichloroethene	81	1.2 U	1.2	0.40
1,1-Dichloroethane	710	1.2 UJ	1.2	0.24
trans-1,2-Dichloroethene	19,000	1.2 U	1.2	0.32
cis-1,2-Dichloroethene	2,600	1.2 U	1.2	0.29
Chloroform	200	1.2 U	1.2	0.28
1,2-Dichloroethane	70	1.2 U	1.2	0.23
2-Butanone	430,000	6.0 U	6.0	0.62
1,1,1-Trichloroethane	1,900,000	1.2 U	1.2	0.27
Carbon Tetrachloride	21	1.2 U	1.2	0.26
Vinyl Acetate	---	6.0 U	6.0	0.46
Bromodichloromethane	89	1.2 U	1.2	0.30
1,2-Dichloropropane	92	1.2 U	1.2	0.19
cis-1,3-Dichloropropene	---	1.2 U	1.2	0.27
Trichloroethene	51	**1.1** J1	1.2	0.25
Dibromochloromethane	---	1.2 U	1.2	0.32
1,1,2-Trichloroethane	73	1.2 U	1.2	0.34
Benzene	93	**0.7** J1	1.2	0.35
trans-1,3-Dichloropropene	---	1.2 U	1.2	0.26
2-Chloroethylvinylether	---	6.0 U	6.0	0.33
Bromoform	---	1.2 U	1.2	0.36
4-Methyl-2-Pentanone (MIBK)	170,000	6.0 U	6.0	0.50
2-Hexanone	32,000	6.0 U	6.0	0.53
Tetrachloroethene	260	1.2 U	1.2	0.31
1,1,2,2-Tetrachloroethane	13	1.2 U	1.2	0.30
Toluene	100,000	1.2 U	1.2	0.18
Chlorobenzene	26,000	1.2 U	1.2	0.26
Ethylbenzene	230	1.2 U	1.2	0.24
Styrene	16,000,000	1.2 U	1.2	0.17
Trichlorofluoromethane	200,000	1.2 U	1.2	0.32
1,1,2-Trichloro-1,2,2-trifuoroethane	1,000,000,000	2.4 U	2.4	0.34
m,p-Xylene	160,000	1.2 U	1.2	0.47
o-Xylene	200,000	1.2 U	1.2	0.27
1,2-Dichlorobenzene	68,000	1.2 U	1.2	0.35
1,3-Dichlorobenzene	3,840	1.2 U	1.2	0.27
1,4-Dichlorobenzene	3,500	1.2 U	1.2	0.28
Acrolein	---	60 UJ	60	4.6
Methyl Iodide	---	1.2 U	1.2	0.26
Bromoethane	---	2.4 U	2.4	0.53
Acrylonitrile	---	6.0 U	6.0	1.2
1,1-Dichloropropene	---	1.2 U	1.2	0.37
Dibromomethane	---	1.2 U	1.2	0.18
1,1,1,2-Tetrachloroethane	---	1.2 U	1.2	0.28
1,2-Dibromo-3-chloropropane	---	6.0 U	6.0	0.70
1,2,3-Trichloropropane	---	2.4 U	2.4	0.62
trans-1,4-Dichloro-2-butene	---	6.0 U	6.0	0.52
1,3,5-Trimethylbenzene	800,000	1.2 U	1.2	0.30
1,2,4-Trimethylbenzene	800,000	1.2 U	1.2	0.28
Hexachlorobutadiene	---	6.0 U	6.0	0.49
Ethylene Dibromide	---	1.2 U	1.2	0.21
Bromochloromethane	---	1.2 U	1.2	0.39

TABLE M-2
DIRECT-PUSH SOIL BORINGS SOIL ANALYTICAL RESULTS
BOEING ISAACSON-THOMPSON
REMEDIAL INVESTIGATION

	Preliminary Cleanup Level	IT-SB-12(14-15.5) TX01L 11/14/2011		
		Result	Reporting Limit	Detection Limit
2,2-Dichloropropane	---	1.2 U	1.2	0.35
1,3-Dichloropropane	---	1.2 U	1.2	0.25
Isopropylbenzene	78,000	1.2 U	1.2	0.28
n-Propylbenzene	11,000	1.2 U	1.2	0.33
Bromobenzene	---	1.2 U	1.2	0.18
2-Chlorotoluene	---	1.2 U	1.2	0.36
4-Chlorotoluene	400,000	1.2 U	1.2	0.33
tert-Butylbenzene	---	1.2 U	1.2	0.37
sec-Butylbenzene	---	1.2 U	1.2	0.29
4-Isopropyltoluene	---	1.2 U	1.2	0.28
n-Butylbenzene	27,000	1.2 U	1.2	0.31
1,2,4-Trichlorobenzene	80	6.0 U	6.0	0.40
Naphthalene	2,100	6.0 U	6.0	0.51
1,2,3-Trichlorobenzene	---	6.0 U	6.0	0.37
SEMIVOLATILES (µg/kg)				
Method SW8270D				
Phenol	1,900,000	**28**	18	7.8
Bis-(2-Chloroethyl) Ether	---	18 U	18	3.0
2-Chlorophenol	---	18 U	18	2.1
1,3-Dichlorobenzene	3,840	18 U	18	2.4
1,4-Dichlorobenzene	3,500	18 U	18	2.6
Benzyl Alcohol	8,000,000	18 UJ	18	5.5
1,2-Dichlorobenzene	68,000	18 U	18	2.2
2-Methylphenol	250,000	18 U	18	4.7
2,2'-Oxybis(1-Chloropropane)	---	18 U	18	3.4
4-Methylphenol	41,000	**25** J1	36	6.0
N-Nitroso-Di-N-Propylamine	---	18 U	18	3.0
Hexachloroethane	---	18 U	18	2.6
Nitrobenzene	---	18 U	18	3.7
Isophorone	---	18 U	18	2.6
2-Nitrophenol	---	90 U	90	35
2,4-Dimethylphenol	95,000	36 U	36	3.1
Benzoic Acid	9,000	360 U	360	91
bis(2-Chloroethoxy) Methane	---	18 U	18	1.8
2,4-Dichlorophenol	---	180 U	180	19
1,2,4-Trichlorobenzene	80	18 U	18	3.1
Naphthalene	2,100	**22**	18	2.5
4-Chloroaniline	---	240 U	240	20
Hexachlorobutadiene	---	90 U	90	4.1
4-Chloro-3-methylphenol	740,000	90 U	90	14
2-Methylnaphthalene	320,000	18 U	18	2.8
Hexachlorocyclopentadiene	---	360 U	360	60
2,4,6-Trichlorophenol	---	90 U	90	20
2,4,5-Trichlorophenol	---	90 U	90	19
2-Chloronaphthalene	---	18 U	18	2.4
2-Nitroaniline	---	90 U	90	17
Dimethylphthalate	71	18 U	18	2.6
Acenaphthylene	---	18 U	18	5.1
3-Nitroaniline	---	90 U	90	20
Acenaphthene	230,000	18 U	18	2.9
2,4-Dinitrophenol	---	760 UJ	760	100
4-Nitrophenol	---	90 U	90	31
Dibenzofuran	80,000	18 U	18	3.7
2,6-Dinitrotoluene	---	90 U	90	28
2,4-Dinitrotoluene	---	90 U	90	18
Diethylphthalate	178,000	45 U	45	33
4-Chlorophenyl-phenylether	---	18 U	18	4.8
Fluorene	150,000	18 U	18	3.9
4-Nitroaniline	---	90 U	90	34

TABLE M-2
DIRECT-PUSH SOIL BORINGS SOIL ANALYTICAL RESULTS
BOEING ISAACSON-THOMPSON
REMEDIAL INVESTIGATION

	Preliminary Cleanup Level	IT-SB-12(14-15.5) TX01L 11/14/2011		
		Result	Reporting Limit	Detection Limit
4,6-Dinitro-2-Methylphenol	---	180 U	180	19
N-Nitrosodiphenylamine	204,000	18 U	18	4.8
4-Bromophenyl-phenylether	---	18 U	18	4.5
Hexachlorobenzene	---	18 U	18	3.9
Pentachlorophenol	---	180 U	180	44
Phenanthrene	---	**14** J1	18	3.3
Carbazole	50,000	18 U	18	2.4
Anthracene	1,600,000	18 U	18	4.0
Di-n-Butylphthalate	26,000	18 U	18	7.3
Fluoranthene	230,000	**11** J1	18	2.6
Pyrene	240,000	**14** J1	18	1.7
Butylbenzylphthalate	1,700	18 U	18	5.5
3,3'-Dichlorobenzidine	---	140 UJ	140	16
Benzo(a)anthracene	---	18 U	18	3.0
bis(2-Ethylhexyl)phthalate	56,600	**15** J1	22	13
Chrysene	---	18 U	18	3.4
Di-n-Octyl phthalate	---	18 U	18	5.3
Benzo(a)pyrene	---	18 U	18	4.9
Indeno(1,2,3-cd)pyrene	---	18 U	18	4.2
Dibenz(a,h)anthracene	---	18 U	18	3.9
Benzo(g,h,i)perylene	---	18 U	18	4.0
1-Methylnaphthalene	16,000	18 U	18	2.4
Total Benzofluoranthenes	---	18 U	18	2.5
cPAH TEQ	15	ND	NA	NA
PAHs (µg/kg)				
Method SW8270D-SIM				
Naphthalene	2,100	**31**	4.6	2.4
2-Methylnaphthalene	320,000	4.6 U	4.6	1.4
1-Methylnaphthalene	16,000	4.6 U	4.6	1.6
Total Naphthalenes	---	**31**	NA	NA
Acenaphthylene	---	**5.1**	4.6	1.2
Acenaphthene	230,000	**2.6** J1	4.6	1.2
Fluorene	150,000	4.6 U	4.6	1.2
Phenanthrene	---	**22**	4.6	1.8
Anthracene	1,600,000	4.6 U	4.6	1.3
Fluoranthene	230,000	**17**	4.6	1.6
Pyrene	240,000	**16**	4.6	2.0
Benzo(a)anthracene	---	**2.5** J1	4.6	1.5
Chrysene	---	**5.0**	4.6	1.7
Benzo(a)pyrene	---	4.6 U	4.6	1.6
Indeno(1,2,3-cd)pyrene	---	**4.6**	4.6	3.2
Dibenz(a,h)anthracene	---	4.6 U	4.6	2.2
Benzo(g,h,i)perylene	---	**8.4**	4.6	2.8
Dibenzofuran	80,000	**4.3** J1	4.6	1.4
Total Benzofluoranthenes	---	**9.3**	4.6	1.7
cPAH TEQ	15	**1.7** J	NA	NA

TABLE M-2
DIRECT-PUSH SOIL BORINGS SOIL ANALYTICAL RESULTS
BOEING ISAACSON-THOMPSON
REMEDIAL INVESTIGATION

	Preliminary Cleanup Level	IT-SB-12(14-15.5) TX01L 11/14/2011		
		Result	Reporting Limit	Detection Limit
PCBs (µg/kg)				
Method SW8082				
Aroclor 1016	0.72	32 U	32	1.9
Aroclor 1242	0.72	32 U	32	2.4
Aroclor 1248	220	32 U	32	2.4
Aroclor 1254	0.29	32 U	32	2.4
Aroclor 1260	5.4	32 U	32	2.4
Aroclor 1221	---	32 U	32	2.4
Aroclor 1232	---	32 U	32	2.4
Total PCBs	1.8	ND	NA	NA
TOTAL PETROLEUM HYDROCARBONS (mg/kg)				
NWTPH-Dx				
Diesel-Range Organics	2,000	**10**	6.4	1.6
Oil-Range Organics	2,000	**17**	13	2.0
NWTPH-G				
Gasoline-Range Organics	100/30	7.2 U	7.2	3.5
TOTAL METALS (mg/kg)				
Methods 200.8/7471A/SW7196A				
Antimony	5	0.2 U	0.2	0.016
Arsenic	7	**24.6**	0.2	0.11
Barium	640	**47.3**	0.6	0.069
Beryllium	160	0.2 U	0.2	0.022
Cadmium	1.3	0.1 U	0.1	0.015
Chromium	1,480	**12.6**	0.6	0.047
Chromium VI	3.8	0.518 U	0.518	0.030
Copper	36	**21.8**	0.6	0.044
Lead	250	**35.5**	0.1	0.058
Mercury	1.5	0.03 U	0.03	0.0014
Nickel	210	**12.0**	0.6	0.060
Selenium	1.0	0.6 U	0.6	0.12
Silver	170	0.2 U	0.2	0.0098
Thallium	0.67	0.2 U	0.2	0.0037
Zinc	1,400	**48**	5	0.42

ND = Not Detected.
NA = Not Applicable.
Bold = Detected compound.
Boxed = Exceeds Preliminary Cleanup Level
µg/kg = micrograms per kilogram
mg/kg = milligrams per kilogram

TEQ = Toxic Equivalent Concentration
SIM = Select Ion Monitoring
cPAH = Carcinogenic Polycyclic Aromatic Hydrocarbons
PCB = Polychlorinated Biphenyls
NWTPH-Dx = Total Petroleum Hydrocarbon-Diesel Range
NWTPH-G = Total Petroleum Hydrocarbon-Gasoline Range

U = Indicates the compound was not detected at or above the reporting limit.
UJ = The analyte was not detected in the sample; the reported sample reporting limit is an estimate.
J = Indicates the analyte was positively identified; the associated numerical value is the approximate concentration of the analyte in the sample.
J1 = Laboratory flag indicating the analyte was positively identified; the associated concentration is approximate and less than the reporting limit, but equal to or greater than the detection limit.
UJ2 = The analyted was not detected in the sample at or above the numerical value shown; the numerical value is below the reporting limit, but greater than the detection limit.
M = Estimated value for an analyte detected and confirmed by an analyst, but with low spectral match parameters. This flag is used only for GC-MS analyses.
P = The analyte was detected on both chromatographic columns but the quantified values differ by 40% RPD with no obvious chromatographic interference. The higher of the two values is reported by the laboratory.

TABLE M-3
MONITORING WELL BORINGS SOIL ANALYTICAL RESULTS
BOEING ISAACSON-THOMPSON
REMEDIAL INVESTIGATION

	Preliminary Cleanup Level	IT-MW-1 (3-4) ST77A 04/25/2011			IT-MW-1 (5-6) ST77B 04/25/2011			IT-MW-1 (8-9) ST77C 04/25/2011			IT-MW-2 (2-3) SU07A 04/26/2011			IT-MW-2 (5-6) SU07B 04/26/2011		
		Result	Reporting Limit	Detection Limit	Result	Reporting Limit	Detection Limit	Result	Reporting Limit	Detection Limit	Result	Reporting Limit	Detection Limit	Result	Reporting Limit	Detection Limit
VOLATILES (µg/kg)																
Method SW8260C																
Chloromethane	1,600	1.4 UJ	1.4	0.37	1.4 UJ	1.4	0.36	1.3 UJ	1.3	0.34	1.1 U	1.1	0.28	1.2 U	1.2	0.32
Bromomethane	---	1.4 UJ	1.4	0.26	1.4 UJ	1.4	0.26	1.3 UJ	1.3	0.24	1.1 U	1.1	0.20	1.2 U	1.2	0.23
Vinyl Chloride	7.4	1.4 UJ	1.4	0.33	1.4 UJ	1.4	0.32	1.3 UJ	1.3	0.30	1.1 U	1.1	0.25	1.2 U	1.2	0.29
Chloroethane	280,000	1.4 UJ	1.4	0.64	1.4 UJ	1.4	0.63	1.3 UJ	1.3	0.59	1.1 U	1.1	0.49	1.2 U	1.2	0.57
Methylene Chloride	2400	**11** J	2.8	0.88	**16** J	2.7	0.87	**14** J	2.6	0.81	**11**	2.1	0.67	**13**	2.5	0.78
Acetone	510,000	**76** J	7.0	0.67	**34** J	6.8	0.66	**36** J	6.4	0.62	**26**	5.3	0.51	**88**	6.1	0.59
Carbon Disulfide	75,000	1.4 UJ	1.4	0.78	1.4 UJ	1.4	0.76	1.3 UJ	1.3	0.71	1.1 U	1.1	0.59	1.2 U	1.2	0.69
1,1-Dichloroethene	81	1.4 UJ	1.4	0.47	1.4 UJ	1.4	0.46	1.3 UJ	1.3	0.43	1.1 U	1.1	0.35	1.2 U	1.2	0.41
1,1-Dichloroethane	710	1.4 UJ	1.4	0.28	1.4 UJ	1.4	0.28	1.3 UJ	1.3	0.26	1.1 U	1.1	0.21	1.2 U	1.2	0.25
trans-1,2-Dichloroethene	19,000	1.4 UJ	1.4	0.37	1.4 UJ	1.4	0.36	1.3 UJ	1.3	0.34	1.1 U	1.1	0.28	1.2 U	1.2	0.33
cis-1,2-Dichloroethene	2,600	1.4 UJ	1.4	0.33	1.4 UJ	1.4	0.33	1.3 UJ	1.3	0.31	1.1 U	1.1	0.25	1.2 U	1.2	0.29
Chloroform	200	1.4 UJ	1.4	0.33	1.4 UJ	1.4	0.32	1.3 UJ	1.3	0.30	1.1 U	1.1	0.25	1.2 U	1.2	0.29
1,2-Dichloroethane	70	1.4 UJ	1.4	0.27	1.4 UJ	1.4	0.26	1.3 UJ	1.3	0.24	1.1 U	1.1	0.20	1.2 U	1.2	0.23
2-Butanone	430,000	7.0 UJ	7.0	0.71	6.8 UJ	6.8	0.70	6.4 UJ	6.4	0.66	5.3 U	5.3	0.54	**7.1**	6.1	0.63
1,1,1-Trichloroethane	1,900,000	1.4 UJ	1.4	0.31	1.4 UJ	1.4	0.31	1.3 UJ	1.3	0.29	1.1 U	1.1	0.24	1.2 U	1.2	0.28
Carbon Tetrachloride	21	1.4 UJ	1.4	0.30	1.4 UJ	1.4	0.29	1.3 UJ	1.3	0.27	1.1 U	1.1	0.22	1.2 U	1.2	0.26
Vinyl Acetate	---	7.0 UJ	7.0	0.53	6.8 UJ	6.8	0.52	6.4 UJ	6.4	0.49	5.3 UJ	5.3	0.40	6.1 UJ	6.1	0.47
Bromodichloromethane	89	1.4 UJ	1.4	0.35	1.4 UJ	1.4	0.35	1.3 UJ	1.3	0.32	1.1 U	1.1	0.27	1.2 U	1.2	0.31
1,2-Dichloropropane	92	1.4 UJ	1.4	0.23	1.4 UJ	1.4	0.22	1.3 UJ	1.3	0.21	1.1 U	1.1	0.17	1.2 U	1.2	0.20
cis-1,3-Dichloropropene	---	1.4 UJ	1.4	0.31	1.4 UJ	1.4	0.31	1.3 UJ	1.3	0.29	1.1 U	1.1	0.24	1.2 U	1.2	0.28
Trichloroethene	51	1.4 UJ	1.4	0.30	1.4 UJ	1.4	0.29	1.3 UJ	1.3	0.27	1.1 U	1.1	0.22	1.2 U	1.2	0.26
Dibromochloromethane	---	1.4 UJ	1.4	0.37	1.4 UJ	1.4	0.36	1.3 UJ	1.3	0.34	1.1 U	1.1	0.28	1.2 U	1.2	0.33
1,1,2-Trichloroethane	73	1.4 UJ	1.4	0.40	1.4 UJ	1.4	0.39	1.3 UJ	1.3	0.37	1.1 U	1.1	0.30	1.2 U	1.2	0.35
Benzene	93	1.4 UJ	1.4	0.41	1.4 UJ	1.4	0.40	1.3 UJ	1.3	0.38	1.1 U	1.1	0.31	1.2 U	1.2	0.36
trans-1,3-Dichloropropene	---	1.4 UJ	1.4	0.30	1.4 UJ	1.4	0.30	1.3 UJ	1.3	0.28	1.1 U	1.1	0.23	1.2 U	1.2	0.27
2-Chloroethylvinylether	---	7.0 UJ	7.0	0.38	6.8 UJ	6.8	0.38	6.4 UJ	6.4	0.35	5.3 U	5.3	0.29	6.1 U	6.1	0.34
Bromoform	---	1.4 UJ	1.4	0.41	1.4 UJ	1.4	0.41	1.3 UJ	1.3	0.38	1.1 U	1.1	0.31	1.2 U	1.2	0.36
4-Methyl-2-Pentanone (MIBK)	170,000	7.0 UJ	7.0	0.58	6.8 UJ	6.8	0.57	6.4 UJ	6.4	0.54	5.3 U	5.3	0.44	6.1 U	6.1	0.52
2-Hexanone	32,000	7.0 UJ	7.0	0.61	6.8 UJ	6.8	0.60	6.4 UJ	6.4	0.56	5.3 U	5.3	0.46	6.1 U	6.1	0.54
Tetrachloroethene	260	1.4 UJ	1.4	0.36	1.4 UJ	1.4	0.35	1.3 UJ	1.3	0.33	1.1 U	1.1	0.27	1.2 U	1.2	0.32
1,1,2,2-Tetrachloroethane	13	1.4 UJ	1.4	0.35	1.4 UJ	1.4	0.35	1.3 UJ	1.3	0.32	1.1 U	1.1	0.27	1.2 U	1.2	0.31
Toluene	100,000	1.4 UJ	1.4	0.21	1.4 UJ	1.4	0.21	1.3 UJ	1.3	0.19	1.1 U	1.1	0.16	1.2 U	1.2	0.19
Chlorobenzene	26,000	1.4 UJ	1.4	0.31	1.4 UJ	1.4	0.30	1.3 UJ	1.3	0.28	1.1 U	1.1	0.23	1.2 U	1.2	0.27
Ethylbenzene	230	1.4 UJ	1.4	0.28	1.4 UJ	1.4	0.28	1.3 UJ	1.3	0.26	1.1 U	1.1	0.21	1.2 U	1.2	0.25
Styrene	16,000,000	1.4 UJ	1.4	0.19	1.4 UJ	1.4	0.19	1.3 UJ	1.3	0.18	1.1 U	1.1	0.15	1.2 U	1.2	0.17
Trichlorofluoromethane	200,000	1.4 UJ	1.4	0.37	1.4 UJ	1.7	0.36	1.3 UJ	1.3	0.34	1.1 U	1.1	0.28	1.2 U	1.2	0.33
1,1,2-Trichloro-1,2,2-trifuoroethane	1,000,000,000	2.8 UJ	2.8	0.40	2.7 UJ	2.7	0.39	2.6 UJ	2.6	0.37	2.1 U	2.1	0.30	2.5 U	2.5	0.35
m,p-Xylene	160,000	1.4 UJ	1.4	0.55	1.4 UJ	1.4	0.54	1.3 UJ	1.3	0.50	1.1 U	1.1	0.41	1.2 U	1.2	0.48
o-Xylene	200,000	1.4 UJ	1.4	0.31	1.4 UJ	1.4	0.31	1.3 UJ	1.3	0.29	1.1 U	1.1	0.24	1.2 U	1.2	0.28
1,2-Dichlorobenzene	68,000	1.4 UJ	1.4	0.41	1.4 UJ	1.4	0.40	1.3 UJ	1.3	0.37	1.1 U	1.1	0.31	1.2 U	1.2	0.36
1,3-Dichlorobenzene	3,840	1.4 UJ	1.4	0.32	1.4 UJ	1.4	0.31	1.3 UJ	1.3	0.29	1.1 U	1.1	0.24	1.2 U	1.2	0.28
1,4-Dichlorobenzene	3,500	1.4 UJ	1.4	0.32	1.4 UJ	1.4	0.32	1.3 UJ	1.3	0.30	1.1 U	1.1	0.24	1.2 U	1.2	0.29
Acrolein	---	70 UJ	70	5.3	68 UJ	68	5.2	64 UJ	64	4.9	53 U	53	4.0	61 U	61	4.7
Methyl Iodide	---	1.4 UJ	1.4	0.30	1.4 UJ	1.4	0.29	1.3 UJ	1.3	0.27	1.1 U	1.1	0.23	1.2 U	1.2	0.26
Bromoethane	---	2.8 UJ	2.8	0.61	2.7 UJ	2.7	0.60	2.6 UJ	2.6	0.56	2.1 U	2.1	0.46	2.5 U	2.5	0.54
Acrylonitrile	---	7.0 UJ	7.0	1.4	6.8 UJ	6.8	1.4	6.4 UJ	6.4	1.3	5.3 U	5.3	1.1	6.1 U	6.1	1.3
1,1-Dichloropropene	---	1.4 UJ	1.4	0.43	1.4 UJ	1.4	0.43	1.3 UJ	1.3	0.40	1.1 U	1.1	0.33	1.2 U	1.2	0.38
Dibromomethane	---	1.4 UJ	1.4	0.20	1.4 UJ	1.4	0.20	1.3 UJ	1.3	0.19	1.1 U	1.1	0.15	1.2 U	1.2	0.18
1,1,1,2-Tetrachloroethane	---	1.4 UJ	1.4	0.32	1.4 UJ	1.4	0.32	1.3 UJ	1.3	0.30	1.1 U	1.1	0.25	1.2 U	1.2	0.29
1,2-Dibromo-3-chloropropane	---	7.0 UJ	7.0	0.82	6.8 UJ	6.8	0.80	6.4 UJ	6.4	0.75	5.3 U	5.3	0.62	6.1 U	6.1	0.72
1,2,3-Trichloropropane	---	2.8 UJ	2.8	0.72	2.7 UJ	2.7	0.71	2.6 UJ	2.6	0.66	2.1 U	2.1	0.54	2.5 U	2.5	0.64
trans-1,4-Dichloro-2-butene	---	7.0 UJ	7.0	0.61	6.8 UJ	6.8	0.60	6.4 UJ	6.4	0.56	5.3 U	5.3	0.46	6.1 U	6.1	0.54
1,3,5-Trimethylbenzene	800,000	1.4 UJ	1.4	0.35	1.4 UJ	1.4	0.35	1.3 UJ	1.3	0.32	1.1 U	1.1	0.27	1.2 U	1.2	0.31
1,2,4-Trimethylbenzene	800,000	1.4 UJ	1.4	0.32	1.4 UJ	1.4	0.31	1.3 UJ	1.3	0.29	1.1 U	1.1	0.24	1.2 U	1.2	0.28
Hexachlorobutadiene	---	7.0 UJ	7.0	0.57	6.8 UJ	6.8	0.56	6.4 UJ	6.4	0.52	5.3 UJ	5.3	0.43	6.1 UJ	6.1	0.50

TABLE M-3
MONITORING WELL BORINGS SOIL ANALYTICAL RESULTS
BOEING ISAACSON-THOMPSON
REMEDIAL INVESTIGATION

	Preliminary Cleanup Level	IT-MW-1 (3-4) ST77A 04/25/2011			IT-MW-1 (5-6) ST77B 04/25/2011			IT-MW-1 (8-9) ST77C 04/25/2011			IT-MW-2 (2-3) SU07A 04/26/2011			IT-MW-2 (5-6) SU07B 04/26/2011		
		Result	Reporting Limit	Detection Limit	Result	Reporting Limit	Detection Limit	Result	Reporting Limit	Detection Limit	Result	Reporting Limit	Detection Limit	Result	Reporting Limit	Detection Limit
Ethylene Dibromide	---	1.4 UJ	1.4	0.25	1.4 UJ	1.4	0.24	1.3 UJ	1.3	0.23	1.1 U	1.1	0.19	1.2 U	1.2	0.22
Bromochloromethane	---	1.4 UJ	1.4	0.45	1.4 UJ	1.4	0.44	1.3 UJ	1.3	0.41	1.1 U	1.1	0.34	1.2 U	1.2	0.40
2,2-Dichloropropane	---	1.4 UJ	1.4	0.41	1.4 UJ	1.4	0.40	1.3 UJ	1.3	0.37	1.1 U	1.1	0.31	1.2 U	1.2	0.36
1,3-Dichloropropane	---	1.4 UJ	1.4	0.29	1.4 UJ	1.4	0.29	1.3 UJ	1.3	0.27	1.1 U	1.1	0.22	1.2 U	1.2	0.26
Isopropylbenzene	78,000	1.4 UJ	1.4	0.32	1.4 UJ	1.4	0.32	1.3 UJ	1.3	0.30	1.1 U	1.1	0.25	1.2 U	1.2	0.29
n-Propylbenzene	11,000	1.4 UJ	1.4	0.38	1.4 UJ	1.4	0.37	1.3 UJ	1.3	0.35	1.1 U	1.1	0.29	1.2 U	1.2	0.33
Bromobenzene	---	1.4 UJ	1.4	0.21	1.4 UJ	1.4	0.21	1.3 UJ	1.3	0.20	1.1 U	1.1	0.16	1.2 U	1.2	0.19
2-Chlorotoluene	---	1.4 UJ	1.4	0.42	1.4 UJ	1.4	0.41	1.3 UJ	1.3	0.38	1.1 U	1.1	0.32	1.2 U	1.2	0.37
4-Chlorotoluene	400,000	1.4 UJ	1.4	0.39	1.4 UJ	1.4	0.38	1.3 UJ	1.3	0.35	1.1 U	1.1	0.29	1.2 U	1.2	0.34
tert-Butylbenzene	---	1.4 UJ	1.4	0.43	1.4 UJ	1.4	0.42	1.3 UJ	1.3	0.39	1.1 U	1.1	0.32	1.2 U	1.2	0.38
sec-Butylbenzene	---	1.4 UJ	1.4	0.33	1.4 UJ	1.4	0.33	1.3 UJ	1.3	0.31	1.1 U	1.1	0.25	1.2 U	1.2	0.29
4-Isopropyltoluene	---	1.4 UJ	1.4	0.33	1.4 UJ	1.4	0.32	1.3 UJ	1.3	0.30	1.1 U	1.1	0.25	1.2 U	1.2	0.29
n-Butylbenzene	27,000	1.4 UJ	1.4	0.36	1.4 UJ	1.4	0.36	1.3 UJ	1.3	0.34	1.1 U	1.1	0.28	1.2 U	1.2	0.32
1,2,4-Trichlorobenzene	80	7.0 UJ	7.0	0.46	6.8 UJ	6.8	0.45	6.4 UJ	6.4	0.42	5.3 U	5.3	0.35	6.1 U	6.1	0.41
Naphthalene	2,100	7.0 UJ	7.0	0.60	6.8 UJ	6.8	0.59	6.4 UJ	6.4	0.55	5.3 U	5.3	0.45	6.1 U	6.1	0.53
1,2,3-Trichlorobenzene	---	7.0 UJ	7.0	0.42	6.8 UJ	6.8	0.42	6.4 UJ	6.4	0.39	5.3 UJ	5.3	0.32	6.1 UJ	6.1	0.37
SEMIVOLATILES (µg/kg)																
Method SW8270D																
Phenol	1,900,000	20 U	20	6.0	19 U	19	5.7	19 U	19	5.8	18 U	18	5.6	19 U	19	5.8
Bis-(2-Chloroethyl) Ether	---	20 U	20	1.9	19 U	19	5.7	19 U	19	1.9	18 U	18	1.8	19 U	19	1.9
2-Chlorophenol	---	20 U	20	3.5	19 U	19	3.3	19 U	19	3.4	18 U	18	3.3	19 U	19	3.4
1,3-Dichlorobenzene	3,840	20 U	20	2.4	19 U	19	2.3	19 U	19	2.3	18 U	18	2.3	19 U	19	2.3
1,4-Dichlorobenzene	3,500	20 U	20	1.5	19 U	19	1.4	19 U	19	1.4	18 U	18	1.4	19 U	19	1.4
Benzyl Alcohol	8,000,000	20 UJ	20	1.7	19 UJ	19	1.6	19 UJ	19	1.6	18 U	18	1.6	19 U	19	1.6
1,2-Dichlorobenzene	68,000	20 U	20	1.5	19 U	19	1.5	19 U	19	1.5	18 U	18	1.4	19 U	19	1.5
2-Methylphenol	250,000	20 U	20	2.1	19 U	19	2.0	19 U	19	2.0	18 U	18	2.0	19 U	19	2.0
2,2'-Oxybis(1-Chloropropane)	---	20 U	20	1.7	19 U	19	1.6	19 U	19	1.7	18 U	18	1.6	19 U	19	1.7
4-Methylphenol	41,000	20 U	20	4.9	19 U	19	4.7	19 U	19	4.7	18 U	18	4.6	19 U	19	4.7
N-Nitroso-Di-N-Propylamine	---	20 U	20	4.3	19 U	19	4.1	19 U	19	4.2	18 U	18	4.1	19 U	19	4.2
Hexachloroethane	---	20 U	20	2.7	19 U	19	2.6	19 U	19	2.6	18 U	18	2.5	19 U	19	2.6
Nitrobenzene	---	20 U	20	4.3	19 U	19	4.1	19 U	19	4.2	18 U	18	4.1	19 U	19	4.2
Isophorone	---	20 U	20	0.8	19 U	19	0.8	19 U	19	0.8	18 U	18	0.8	19 U	19	0.8
2-Nitrophenol	---	98 U	98	12	94 U	94	11	95 U	95	12	92 U	92	11	95 U	95	11
2,4-Dimethylphenol	95,000	20 U	20	1.8	19 U	19	1.8	19 U	19	1.8	18 U	18	1.7	19 U	19	1.8
Benzoic Acid	9,000	**120** J	200	33	190 U	190	32	190 U	190	32	180 U	180	31	190 U	190	32
bis(2-Chloroethoxy) Methane	---	20 U	20	2.2	19 U	19	2.1	19 U	19	2.1	18 U	18	2.0	19 U	19	2.1
2,4-Dichlorophenol	---	98 U	98	9.0	94 U	94	8.6	95 U	95	8.7	92 U	92	8.5	95 U	95	8.7
1,2,4-Trichlorobenzene	80	20 U	20	2.9	19 U	19	2.8	19 U	19	2.9	18 U	18	2.8	19 U	19	2.9
Naphthalene	2,100	**17** J	20	1.9	**10** J	19	1.8	19 U	19	1.8	18 U	18	1.8	19 U	19	1.8
4-Chloroaniline	---	98 U	98	5.7	94 U	94	5.5	95 U	95	5.6	92 U	92	5.4	95 U	95	5.5
Hexachlorobutadiene	---	20 U	20	3.6	19 U	19	3.4	19 U	19	3.5	18 U	18	3.4	19 U	19	3.5
4-Chloro-3-methylphenol	740,000	98 U	98	8.3	94 U	94	8.0	95 U	95	8.1	92 U	92	7.8	95 U	95	8.1
2-Methylnaphthalene	320,000	**16** J	20	2.3	19 U	19	2.3	19 U	19	2.3	18 U	18	2.2	19 U	19	2.3
Hexachlorocyclopentadiene	---	98 U	98	5.7	94 U	94	5.5	95 U	95	5.6	92 U	92	5.4	95 U	95	5.5
2,4,6-Trichlorophenol	---	98 U	98	7.0	94 U	94	6.7	95 U	95	6.8	92 U	92	6.6	95 U	95	6.8
2,4,5-Trichlorophenol	---	98 U	98	14	94 U	94	14	95 U	95	14	92 U	92	14	95 U	95	14
2-Chloronaphthalene	---	20 U	20	1.4	19 U	19	1.3	19 U	19	1.3	18 U	18	1.3	19 U	19	1.3
2-Nitroaniline	---	98 U	98	8.0	94 U	94	7.7	95 U	95	7.8	92 U	92	7.6	95 U	95	7.8
Dimethylphthalate	71	20 U	20	3.2	19 U	19	3.1	19 U	19	3.1	18 U	18	3.0	19 U	19	3.1
Acenaphthylene	---	20 U	20	1.9	19 U	19	1.8	19 U	19	1.8	18 U	18	1.8	19 U	19	1.8
3-Nitroaniline	---	98 U	98	5.8	94 U	94	5.5	95 U	95	5.6	92 U	92	5.4	95 U	95	5.6
Acenaphthene	230,000	20 U	20	1.6	19 U	19	1.6	19 U	19	1.6	18 U	18	1.5	19 U	19	1.6
2,4-Dinitrophenol	---	210 UJ	210	6.7	200 UJ	200	6.4	200 UJ	200	6.5	200 U	200	6.3	200 U	200	6.5
4-Nitrophenol	---	98 U	98	11	94 U	94	11	95 U	95	11	92 U	92	11	95 U	95	11
Dibenzofuran	80,000	**17** J	20	1.8	19 U	19	1.8	19 U	19	1.8	18 U	18	1.7	19 U	19	1.8
2,6-Dinitrotoluene	---	98 U	98	9.9	94 U	94	9.5	95 U	95	9.6	92 U	92	9.3	95 U	95	9.6

TABLE M-3
MONITORING WELL BORINGS SOIL ANALYTICAL RESULTS
BOEING ISAACSON-THOMPSON
REMEDIAL INVESTIGATION

	Preliminary Cleanup Level	IT-MW-1 (3-4) ST77A 04/25/2011			IT-MW-1 (5-6) ST77B 04/25/2011			IT-MW-1 (8-9) ST77C 04/25/2011			IT-MW-2 (2-3) SU07A 04/26/2011			IT-MW-2 (5-6) SU07B 04/26/2011		
		Result	Reporting Limit	Detection Limit	Result	Reporting Limit	Detection Limit	Result	Reporting Limit	Detection Limit	Result	Reporting Limit	Detection Limit	Result	Reporting Limit	Detection Limit
2,4-Dinitrotoluene	---	98 U	98	9.6	94 U	94	9.2	95 U	95	9.4	92 U	92	9.0	95 U	95	9.3
Diethylphthalate	178,000	20 U	20	4.8	19 U	19	4.6	19 U	19	4.6	18 U	18	4.5	19 U	19	4.6
4-Chlorophenyl-phenylether	---	20 U	20	1.7	19 U	19	1.6	19 U	19	1.7	18 U	18	1.6	19 U	19	1.7
Fluorene	150,000	**17** J	20	1.6	19 U	19	1.5	19 U	19	1.5	18 U	18	1.5	19 U	19	1.5
4-Nitroaniline	---	98 U	98	6.1	94 U	94	5.8	95 U	95	5.9	92 U	92	5.7	95 U	95	5.9
4,6-Dinitro-2-Methylphenol	---	200 U	200	21	190 U	190	20	190 U	190	21	180 U	180	20	190 U	190	21
N-Nitrosodiphenylamine	204,000	20 U	20	4.8	19 U	19	4.6	19 U	19	4.7	18 U	18	4.5	19 U	19	4.7
4-Bromophenyl-phenylether	---	20 U	20	3.1	19 U	19	3.0	19 U	19	3.1	18 U	18	3.0	19 U	19	3.0
Hexachlorobenzene	---	20 U	20	1.9	19 U	19	1.8	19 U	19	1.8	18 U	18	1.8	19 U	19	1.8
Pentachlorophenol	---	98 UJ	98	9.4	94 UJ	94	9.0	95 UJ	95	9.2	92 U	92	8.9	95 U	95	9.1
Phenanthrene	---	**48** J	20	2.5	**12** J	19	2.4	19 UJ	19	2.4	18 U	18	2.4	**11** J	19	2.4
Carbazole	50,000	20 U	20	2.4	19 U	19	2.3	19 U	19	2.4	18 U	18	2.3	19 U	19	2.4
Anthracene	1,600,000	**14** J	20	2.1	19 U	19	2.0	19 U	19	2.0	18 U	18	2.0	19 U	19	2.0
Di-n-Butylphthalate	26,000	20 U	20	2.1	19 U	19	2.0	19 U	19	2.1	18 U	18	2.0	19 U	19	2.1
Fluoranthene	230,000	**64**	20	2.0	**15** J	19	1.9	19 U	19	1.9	18 U	18	1.9	19 U	19	1.9
Pyrene	240,000	**69**	20	1.4	**14** J	19	1.4	19 U	19	1.4	18 U	18	1.3	19 U	19	1.4
Butylbenzylphthalate	1,700	20 UJ	20	2.5	19 UJ	19	2.4	19 UJ	19	2.4	18 U	18	2.3	19 U	19	2.4
3,3'-Dichlorobenzidine	---	98 UJ	98	7.9	94 UJ	94	7.6	95 UJ	95	7.7	92 U	92	7.5	95 U	95	7.7
Benzo(a)anthracene	---	**29**	20	2.3	19 U	19	2.2	19 U	19	2.3	18 U	18	2.2	19 U	19	2.3
bis(2-Ethylhexyl)phthalate	56,600	**14** J	20	4.0	**38**	19	3.8	**26**	19	3.9	**14** J	18	3.8	**14** J	19	3.9
Chrysene	---	**45** J	20	1.8	**10** J	19	1.8	19 U	19	1.8	18 U	18	1.7	**20** J	19	1.8
Di-n-Octyl phthalate	---	20 U	20	3.5	19 U	19	3.4	19 U	19	3.4	18 U	18	3.3	19 U	19	3.4
Benzo(a)pyrene	---	20 U	20	1.7	19 U	19	1.6	19 U	19	1.6	18 U	18	1.6	19 U	19	1.6
Indeno(1,2,3-cd)pyrene	---	**20**	20	2.2	19 U	19	2.2	19 U	19	2.2	18 U	18	2.1	19 U	19	2.2
Dibenz(a,h)anthracene	---	20 U	20	2.2	19 U	19	2.1	19 U	19	2.2	18 U	18	2.1	19 U	19	2.2
Benzo(g,h,i)perylene	---	**28**	20	2.7	19 U	19	2.6	19 U	19	2.6	18 U	18	2.6	**16** J	19	2.6
1-Methylnaphthalene	16,000	**14** J	20	1.2	19 U	19	1.2	19 U	19	1.2	18 U	18	1.2	19 U	19	1.2
Total Benzofluoranthenes	---	**55**	20	2.7	**11** J	19	2.6	19 U	19	2.6	18 U	18	2.5	19 U	19	2.6
cPAH TEQ	15	**11**	NA	NA	**1**	NA	NA	ND	NA	NA	ND	NA	NA	**0.2**	NA	NA
PAHs (µg/kg)																
Method SW8270D-SIM																
Naphthalene	2,100	**14**	4.8	1.6	**3.6** J	4.8	1.6	**2.7** J	4.6	1.6	4.8 U	4.8	1.6	4.6 U	4.6	1.5
2-Methylnaphthalene	320,000	**14**	4.8	1.3	**3.3** J	4.8	1.3	4.6 U	4.6	1.3	4.8 U	4.8	1.3	**7.2**	4.6	1.2
1-Methylnaphthalene	16,000	**13**	4.8	1.6	4.8 U	4.8	1.6	4.6 U	4.6	1.6	4.8 U	4.8	1.6	**6.6**	4.6	1.6
Total Naphthalenes	---	**41**	NA	NA	**6.9** J	NA	NA	**2.7** J	NA	NA	ND	NA	NA	**13.8**	NA	NA
Acenaphthylene	---	**3.8** J	4.8	1.1	4.8 U	4.8	1.0	4.6 U	4.6	1.0	4.8 U	4.8	1.1	4.6 U	4.6	1.0
Acenaphthene	230,000	**9.1**	4.8	2.0	4.8 U	4.8	2.0	4.6 U	4.6	1.9	4.8 U	4.8	2.0	4.6 U	4.6	1.9
Fluorene	150,000	**13**	4.8	1.2	4.8 U	4.8	1.2	4.6 U	4.6	1.2	4.8 U	4.8	1.2	4.6 U	4.6	1.2
Phenanthrene	---	**50**	4.8	1.6	**11**	4.8	1.6	**2.6** J	4.6	1.5	4.8 U	4.8	1.6	**8.9**	4.6	1.5
Anthracene	1,600,000	**10**	4.8	0.83	4.8 U	4.8	0.82	4.6 U	4.6	0.80	4.8 U	4.8	0.83	4.6 U	4.6	0.79
Fluoranthene	230,000	**64**	4.8	1.7	**8.8**	4.8	1.7	4.6 U	4.6	1.7	4.8 U	4.8	1.7	**6.0**	4.6	1.7
Pyrene	240,000	**53**	4.8	1.0	**8.4**	4.8	1.0	4.6 U	4.6	0.98	4.8 U	4.8	1.0	**5.8**	4.6	0.97
Benzo(a)anthracene	---	**20**	4.8	1.3	**3.5** J	4.8	1.3	4.6 U	4.6	1.3	4.8 U	4.8	1.3	4.6 U	4.6	1.3
Chrysene	---	**28**	4.8	1.6	**6.7**	4.8	1.6	4.6 U	4.6	1.6	4.8 U	4.8	1.6	**13**	4.6	1.6
Benzo(a)pyrene	---	4.8 U	4.8	0.90	4.8 U	4.8	0.90	4.6 U	4.6	0.87	4.8 U	4.8	0.90	**5.2**	4.6	0.86
Indeno(1,2,3-cd)pyrene	---	14 U	4.8	2.0	4.8 U	4.8	1.9	4.6 U	4.6	1.9	4.8 U	4.8	2.0	4.6 U	4.6	1.9
Dibenz(a,h)anthracene	---	**5.1**	4.8	1.3	4.8 U	4.8	1.3	4.6 U	4.6	1.2	4.8 U	4.8	1.3	4.6 U	4.6	1.2
Benzo(g,h,i)perylene	---	20 U	4.8	0.88	10 U	4.8	0.87	4.6 U	4.6	0.84	4.8 U	4.8	0.88	**17**	4.6	0.83
Dibenzofuran	80,000	**14**	4.8	1.3	4.8 U	4.8	1.3	4.6 U	4.6	1.3	4.8 U	4.8	1.3	4.6 U	4.6	1.2
Total Benzofluoranthenes	---	**44**	4.8	1.8	**7.6**	4.8	1.8	4.6 U	4.6	1.7	4.8 U	4.8	1.8	4.6 U	4.6	1.7
cPAH TEQ	15	**7.19**	NA	NA	**1.177**	NA	NA	ND	NA	NA	ND	NA	NA	**5.33**	NA	NA

TABLE M-3
MONITORING WELL BORINGS SOIL ANALYTICAL RESULTS
BOEING ISAACSON-THOMPSON
REMEDIAL INVESTIGATION

	Preliminary Cleanup Level	IT-MW-1 (3-4) ST77A 04/25/2011			IT-MW-1 (5-6) ST77B 04/25/2011			IT-MW-1 (8-9) ST77C 04/25/2011			IT-MW-2 (2-3) SU07A 04/26/2011			IT-MW-2 (5-6) SU07B 04/26/2011		
		Result	Reporting Limit	Detection Limit	Result	Reporting Limit	Detection Limit	Result	Reporting Limit	Detection Limit	Result	Reporting Limit	Detection Limit	Result	Reporting Limit	Detection Limit
PCBs (µg/kg)																
Method SW8082																
Aroclor 1016	0.72	31 U	31	9.5	30 U	30	9.2	31 U	31	9.3	31 U	31	1.9	32 UJ	32	9.8
Aroclor 1242	0.72	31 U	31	12	30 U	30	11	31 U	31	11	31 U	31	2.3	32 UJ	32	12
Aroclor 1248	220	31 U	31	12	30 U	30	11	31 U	31	11	31 U	31	2.3	32 UJ	32	12
Aroclor 1254	0.29	31 U	31	12	30 U	30	11	31 U	31	11	31 U	31	2.3	32 UJ	32	12
Aroclor 1260	5.4	31 U	31	12	30 U	30	11	31 U	31	11	31 U	31	2.3	32 UJ	32	12
Aroclor 1221	---	31 U	31	12	30 U	30	11	31 U	31	11	31 U	31	2.3	32 UJ	32	12
Aroclor 1232	---	31 U	31	12	30 U	30	11	31 U	31	11	31 U	31	2.3	32 UJ	32	12
Total PCBs	1.8	ND	NA	NA	ND	NA	NA	ND	NA	NA	ND	NA	NA	ND	NA	NA
TOTAL PETROLEUM HYDROCARBONS (mg/kg)																
NWTPH-Dx																
Diesel-Range Organics	2,000	**13**	6.3	0.93	**5.9**	5.1	0.75	5.3 U	5.3	0.78	5.4 U	5.4	0.81	**22**	5.5	0.81
Motor Oil-Range Organics	2,000	**34**	13	1.6	**27**	10	1.3	11 U	11	1.4	11 U	11	1.4	**230**	11	1.4
NWTPH-G																
Gasoline-Range Organics	100/30	8.8 U	8.8	4.2	6.1 U	6.1	2.9	6.9 U	6.9	3.3	**9.7**	6.4	3.1	6.0 U	6.0	2.9
TOTAL METALS (mg/kg)																
Methods 200.8/7471A/SW7196A																
Antimony	5	0.2 U	0.2	0.015	0.2 U	0.2	0.014	0.2 U	0.2	0.013	0.2 U	0.2	0.014	0.2 U	0.2	0.014
Arsenic	7	**5.5**	0.2	0.10	**3.1**	0.2	0.091	**1.7**	0.2	0.088	**2.5**	0.2	0.091	**4.6**	0.2	0.095
Barium	640	**51.7**	0.6	0.064	**3.2**	0.5	0.059	**28.2**	0.5	0.057	**57.6**	0.5	0.058	**51.5**	0.5	0.061
Beryllium	160	**0.3**	0.2	0.021	0.2 U	0.2	0.019	0.2 U	0.2	0.018	0.2 U	0.2	0.019	0.2 U	0.2	0.020
Cadmium	1.3	**0.1**	0.1	0.014	0.1 U	0.1	0.013	0.1 U	0.1	0.012	0.1 U	0.1	0.013	0.1 U	0.1	0.013
Chromium	1,480	**15.1**	0.6	0.044	**9.3**	0.5	0.040	**8.8**	0.5	0.039	**22.3**	0.5	0.040	**12.0**	0.5	0.041
Chromium VI	3.8	0.510 UJ	0.510	0.030	0.434 U	0.434	0.030	0.417 U	0.417	0.030	0.423 U	0.423	0.030	0.449 U	0.449	0.030
Copper	36	**34.2**	0.6	0.041	**15.7**	0.5	0.038	**12.5**	0.5	0.037	**15.7**	0.5	0.038	**16.4**	0.5	0.039
Lead	250	**7.9**	0.1	0.054	**4.7**	0.1	0.049	**1.5**	0.1	0.048	**5.8**	0.1	0.049	**3.8**	0.1	0.051
Mercury	1.5	**0.04**	0.02	0.0012	**0.03**	0.02	0.0012	0.02 U	0.02	0.0010	0.02 U	0.02	0.0012	**0.05**	0.02	0.0010
Nickel	210	**14.8**	0.6	0.056	**9.6**	0.5	0.051	**8.1**	0.5	0.050	**39.5**	0.5	0.051	**13.7**	0.5	0.053
Selenium	1.0	0.6 U	0.6	0.11	0.5 U	0.5	0.10	0.5 U	0.5	0.10	0.5 U	0.5	0.10	0.5 U	0.5	0.11
Silver	170	0.2 U	0.2	0.0092	0.2 U	0.2	0.0084	0.2 U	0.2	0.0081	0.2 U	0.2	0.0083	0.2 U	0.2	0.0087
Thallium	0.67	0.2 U	0.2	0.0034	0.2 U	0.2	0.0031	0.2 U	0.2	0.0030	0.2 U	0.2	0.0031	0.2 U	0.2	0.0033
Zinc	1,400	**55**	5	0.39	**33**	4	0.36	**22**	4	0.34	**35**	4	0.35	**38**	4	0.37

TABLE M-3
MONITORING WELL BORINGS SOIL ANALYTICAL RESULTS
BOEING ISAACSON-THOMPSON
REMEDIAL INVESTIGATION

	Preliminary Cleanup Level	IT-MW-2 (8-9) SU07C 04/26/2011			IT-MW-3 (2-3) SU07D 04/26/2011			IT-MW-3 (5-6) SU07E 04/26/2011			IT-MW-3 (9-10) SU07F 04/26/2011			IT-MW-4(2-3.5) TW27F 11/08/2011		
		Result	Reporting Limit	Detection Limit	Result	Reporting Limit	Detection Limit	Result	Reporting Limit	Detection Limit	Result	Reporting Limit	Detection Limit	Result	Reporting Limit	Detection Limit
VOLATILES (µg/kg)																
Method SW8260C																
Chloromethane	1,600	1.9 U	1.9	0.49	1.2 U	1.2	0.33	1.1 U	1.1	0.28	1.5 U	1.5	0.40	1.3 U	1.3	0.33
Bromomethane	---	1.9 U	1.9	0.35	1.2 U	1.2	0.23	1.1 U	1.1	0.20	1.5 U	1.5	0.28	1.3 UJ	1.3	0.24
Vinyl Chloride	7.4	1.9 U	1.9	0.44	1.2 U	1.2	0.29	1.1 U	1.1	0.25	1.5 U	1.5	0.35	1.3 U	1.3	0.30
Chloroethane	280,000	1.9 U	1.9	0.87	1.2 U	1.2	0.57	1.1 U	1.1	0.50	1.5 U	1.5	0.70	1.3 U	1.3	0.58
Methylene Chloride	2400	**15**	3.8	1.2	**14**	2.5	0.79	**13**	2.1	0.68	**19**	3.0	0.96	**4.7**	2.5	0.80
Acetone	510,000	**93**	9.4	0.91	**34**	6.2	0.60	**26** J	5.4	0.52	**85** J	7.5	0.73	**11** J	6.3	0.61
Carbon Disulfide	75,000	**8.7**	1.9	1.1	1.2 U	1.2	0.69	1.1 U	1.1	0.60	**2.0**	1.5	0.84	1.3 U	1.3	0.71
1,1-Dichloroethene	81	1.9 U	1.9	0.63	1.2 U	1.2	0.42	1.1 U	1.1	0.36	1.5 U	1.5	0.51	1.3 U	1.3	0.43
1,1-Dichloroethane	710	1.9 U	1.9	0.38	1.2 U	1.2	0.25	1.1 U	1.1	0.22	1.5 U	1.5	0.31	1.3 UJ	1.3	0.26
trans-1,2-Dichloroethene	19,000	1.9 U	1.9	0.50	1.2 U	1.2	0.33	1.1 U	1.1	0.29	1.5 U	1.5	0.40	1.3 U	1.3	0.34
cis-1,2-Dichloroethene	2,600	1.9 U	1.9	0.45	1.2 U	1.2	0.30	1.1 U	1.1	0.26	1.5 U	1.5	0.36	1.3 U	1.3	0.30
Chloroform	200	1.9 U	1.9	0.44	1.2 U	1.2	0.29	1.1 U	1.1	0.25	1.5 U	1.5	0.35	1.3 U	1.3	0.30
1,2-Dichloroethane	70	1.9 U	1.9	0.36	1.2 U	1.2	0.24	1.1 U	1.1	0.20	1.5 U	1.5	0.29	1.3 U	1.3	0.24
2-Butanone	430,000	**14**	9.4	0.96	6.2 U	6.2	0.64	5.4 U	5.4	0.55	**9.0**	7.5	0.77	6.3 U	6.3	0.65
1,1,1-Trichloroethane	1,900,000	1.9 U	1.9	0.42	1.2 U	1.2	0.28	1.1 U	1.1	0.24	1.5 U	1.5	0.34	1.3 U	1.3	0.29
Carbon Tetrachloride	21	1.9 U	1.9	0.40	1.2 U	1.2	0.26	1.1 U	1.1	0.23	1.5 U	1.5	0.32	1.3 U	1.3	0.27
Vinyl Acetate	---	9.4 UJ	9.4	0.72	6.2 U	6.2	0.47	5.4 U	5.4	0.41	7.5 U	7.5	0.57	6.3 U	6.3	0.48
Bromodichloromethane	89	1.9 U	1.9	0.48	1.2 U	1.2	0.32	1.1 U	1.1	0.27	1.5 U	1.5	0.38	1.3 U	1.3	0.32
1,2-Dichloropropane	92	1.9 U	1.9	0.30	1.2 U	1.2	0.20	1.1 U	1.1	0.17	1.5 U	1.5	0.24	1.3 U	1.3	0.21
cis-1,3-Dichloropropene	---	1.9 U	1.9	0.42	1.2 U	1.2	0.28	1.1 U	1.1	0.24	1.5 U	1.5	0.34	1.3 U	1.3	0.29
Trichloroethene	51	1.9 U	1.9	0.40	1.2 U	1.2	0.26	1.1 U	1.1	0.23	1.5 U	1.5	0.32	1.3 U	1.3	0.27
Dibromochloromethane	---	1.9 U	1.9	0.50	1.2 U	1.2	0.33	1.1 U	1.1	0.29	1.5 U	1.5	0.40	1.3 U	1.3	0.34
1,1,2-Trichloroethane	73	1.9 U	1.9	0.54	1.2 U	1.2	0.35	1.1 U	1.1	0.31	1.5 U	1.5	0.43	1.3 U	1.3	0.36
Benzene	93	1.9 U	1.9	0.56	1.2 U	1.2	0.37	1.1 U	1.1	0.32	1.5 U	1.5	0.45	1.3 U	1.3	0.37
trans-1,3-Dichloropropene	---	1.9 U	1.9	0.41	1.2 U	1.2	0.27	1.1 U	1.1	0.23	1.5 U	1.5	0.33	1.3 U	1.3	0.27
2-Chloroethylvinylether	---	9.4 U	9.4	0.52	6.2 U	6.2	0.34	5.4 UJ	5.4	0.30	7.5 UJ	7.5	0.42	6.3 U	6.3	0.35
Bromoform	---	1.9 U	1.9	0.56	1.2 U	1.2	0.37	1.1 U	1.1	0.32	1.5 U	1.5	0.45	1.3 U	1.3	0.38
4-Methyl-2-Pentanone (MIBK)	170,000	9.4 U	9.4	0.79	6.2 U	6.2	0.52	5.4 U	5.4	0.45	7.5 U	7.5	0.63	6.3 U	6.3	0.53
2-Hexanone	32,000	9.4 U	9.4	0.83	6.2 U	6.2	0.54	5.4 U	5.4	0.47	7.5 U	7.5	0.66	6.3 U	6.3	0.56
Tetrachloroethene	260	1.9 U	1.9	0.48	1.2 U	1.2	0.32	1.1 U	1.1	0.28	1.5 U	1.5	0.39	1.3 U	1.3	0.33
1,1,2,2-Tetrachloroethane	13	1.9 U	1.9	0.48	1.2 U	1.2	0.31	1.1 U	1.1	0.27	1.5 U	1.5	0.38	1.3 U	1.3	0.32
Toluene	100,000	1.9 U	1.9	0.28	1.2 U	1.2	0.19	1.1 U	1.1	0.16	1.5 U	1.5	0.23	1.3 U	1.3	0.19
Chlorobenzene	26,000	1.9 U	1.9	0.41	1.2 U	1.2	0.27	1.1 U	1.1	0.23	1.5 U	1.5	0.33	1.3 U	1.3	0.28
Ethylbenzene	230	1.9 U	1.9	0.38	1.2 U	1.2	0.25	1.1 U	1.1	0.22	1.5 U	1.5	0.30	1.3 U	1.3	0.26
Styrene	16,000,000	1.9 U	1.9	0.26	1.2 U	1.2	0.17	1.1 U	1.1	0.15	1.5 U	1.5	0.21	1.3 U	1.3	0.17
Trichlorofluoromethane	200,000	1.9 U	1.9	0.50	1.2 U	1.2	0.33	1.1 U	1.1	0.29	1.5 U	1.5	0.40	1.3 U	1.3	0.34
1,1,2-Trichloro-1,2,2-trifuoroethane	1,000,000,000	3.8 U	3.8	0.54	2.5 U	2.5	0.36	2.1 U	2.1	0.31	3.0 U	3.0	0.43	2.5 U	2.5	0.36
m,p-Xylene	160,000	1.9 U	1.9	0.74	1.2 U	1.2	0.49	1.1 U	1.1	0.42	1.5 U	1.5	0.59	1.3 U	1.3	0.50
o-Xylene	200,000	1.9 U	1.9	0.42	1.2 U	1.2	0.28	1.1 U	1.1	0.24	1.5 U	1.5	0.34	1.3 U	1.3	0.28
1,2-Dichlorobenzene	68,000	1.9 U	1.9	0.55	1.2 U	1.2	0.36	1.1 U	1.1	0.31	1.5 U	1.5	0.44	1.3 U	1.3	0.37
1,3-Dichlorobenzene	3,840	1.9 U	1.9	0.43	1.2 U	1.2	0.28	1.1 U	1.1	0.24	1.5 U	1.5	0.34	1.3 U	1.3	0.29
1,4-Dichlorobenzene	3,500	1.9 U	1.9	0.44	1.2 U	1.2	0.29	1.1 U	1.1	0.25	1.5 U	1.5	0.35	1.3 U	1.3	0.29
Acrolein	---	94 U	94	7.2	62 U	62	4.7	54 U	54	4.1	75 U	75	5.7	63 UJ	63	4.8
Methyl Iodide	---	1.9 U	1.9	0.40	1.2 U	1.2	0.27	1.1 U	1.1	0.23	1.5 U	1.5	0.32	1.3 U	1.3	0.27
Bromoethane	---	3.8 U	3.8	0.83	2.5 UJ	2.5	0.55	2.1 U	2.1	0.47	3.0 U	3.0	0.66	2.5 U	2.5	0.56
Acrylonitrile	---	9.4 U	9.4	1.9	6.2 U	6.2	1.3	5.4 U	5.4	1.1	7.5 U	7.5	1.6	6.3 U	6.3	1.3
1,1-Dichloropropene	---	1.9 U	1.9	0.59	1.2 U	1.2	0.39	1.1 U	1.1	0.33	1.5 U	1.5	0.47	1.3 U	1.3	0.39
Dibromomethane	---	1.9 U	1.9	0.28	1.2 U	1.2	0.18	1.1 U	1.1	0.16	1.5 U	1.5	0.22	1.3 U	1.3	0.19
1,1,1,2-Tetrachloroethane	---	1.9 U	1.9	0.44	1.2 U	1.2	0.29	1.1 U	1.1	0.25	1.5 U	1.5	0.35	1.3 U	1.3	0.29
1,2-Dibromo-3-chloropropane	---	9.4 U	9.4	1.1	6.2 U	6.2	0.73	5.4 UJ	5.4	0.63	7.5 UJ	7.5	0.88	6.3 U	6.3	0.74
1,2,3-Trichloropropane	---	3.8 U	3.8	0.97	2.5 U	2.5	0.64	2.1 U	2.1	0.55	3.0 U	3.0	0.78	2.5 U	2.5	0.65
trans-1,4-Dichloro-2-butene	---	9.4 U	9.4	0.82	6.2 U	6.2	0.54	5.4 U	5.4	0.47	7.5 U	7.5	0.66	6.3 U	6.3	0.55
1,3,5-Trimethylbenzene	800,000	1.9 U	1.9	0.48	1.2 U	1.2	0.32	1.1 U	1.1	0.27	1.5 U	1.5	0.38	1.3 U	1.3	0.32
1,2,4-Trimethylbenzene	800,000	1.9 U	1.9	0.43	**1.4**	1.2	0.29	1.1 U	1.1	0.25	1.5 U	1.5	0.35	1.3 U	1.3	0.29
Hexachlorobutadiene	---	9.4 UJ	9.4	0.77	6.2 U	6.2	0.51	5.4 U	5.4	0.44	7.5 U	7.5	0.62	6.3 U	6.3	0.52

TABLE M-3
MONITORING WELL BORINGS SOIL ANALYTICAL RESULTS
BOEING ISAACSON-THOMPSON
REMEDIAL INVESTIGATION

	Preliminary Cleanup Level	IT-MW-2 (8-9) SU07C 04/26/2011			IT-MW-3 (2-3) SU07D 04/26/2011			IT-MW-3 (5-6) SU07E 04/26/2011			IT-MW-3 (9-10) SU07F 04/26/2011			IT-MW-4(2-3.5) TW27F 11/08/2011		
		Result	Reporting Limit	Detection Limit	Result	Reporting Limit	Detection Limit	Result	Reporting Limit	Detection Limit	Result	Reporting Limit	Detection Limit	Result	Reporting Limit	Detection Limit
Ethylene Dibromide	---	1.9 U	1.9	0.33	1.2 U	1.2	0.22	1.1 U	1.1	0.19	1.5 U	1.5	0.27	1.3 U	1.3	0.22
Bromochloromethane	---	1.9 U	1.9	0.61	1.2 U	1.2	0.40	1.1 U	1.1	0.35	1.5 U	1.5	0.49	1.3 U	1.3	0.41
2,2-Dichloropropane	---	1.9 U	1.9	0.55	1.2 U	1.2	0.36	1.1 U	1.1	0.31	1.5 U	1.5	0.44	1.3 U	1.3	0.37
1,3-Dichloropropane	---	1.9 U	1.9	0.39	1.2 U	1.2	0.26	1.1 U	1.1	0.22	1.5 U	1.5	0.31	1.3 U	1.3	0.26
Isopropylbenzene	78,000	1.9 U	1.9	0.44	1.2 U	1.2	0.29	1.1 U	1.1	0.25	1.5 U	1.5	0.35	1.3 U	1.3	0.29
n-Propylbenzene	11,000	1.9 U	1.9	0.51	1.2 U	1.2	0.34	1.1 U	1.1	0.29	1.5 U	1.5	0.41	1.3 U	1.3	0.34
Bromobenzene	---	1.9 U	1.9	0.29	1.2 U	1.2	0.19	1.1 U	1.1	0.16	1.5 U	1.5	0.23	1.3 U	1.3	0.19
2-Chlorotoluene	---	1.9 U	1.9	0.56	1.2 U	1.2	0.37	1.1 U	1.1	0.32	1.5 U	1.5	0.45	1.3 U	1.3	0.38
4-Chlorotoluene	400,000	1.9 U	1.9	0.52	1.2 U	1.2	0.34	1.1 U	1.1	0.30	1.5 U	1.5	0.42	1.3 U	1.3	0.35
tert-Butylbenzene	---	1.9 U	1.9	0.58	1.2 U	1.2	0.38	1.1 U	1.1	0.33	1.5 U	1.5	0.46	1.3 U	1.3	0.39
sec-Butylbenzene	---	1.9 U	1.9	0.45	1.2 U	1.2	0.30	1.1 U	1.1	0.26	1.5 U	1.5	0.36	1.3 U	1.3	0.30
4-Isopropyltoluene	---	1.9 U	1.9	0.44	1.2 U	1.2	0.29	1.1 U	1.1	0.25	1.5 U	1.5	0.36	1.3 U	1.3	0.30
n-Butylbenzene	27,000	1.9 U	1.9	0.49	1.2 U	1.2	0.33	1.1 U	1.1	0.28	1.5 U	1.5	0.39	1.3 U	1.3	0.33
1,2,4-Trichlorobenzene	80	9.4 U	9.4	0.62	6.2 U	6.2	0.41	5.4 U	5.4	0.36	7.5 U	7.5	0.50	6.3 U	6.3	0.42
Naphthalene	2,100	9.4 U	9.4	0.81	6.2 U	6.2	0.53	5.4 U	5.4	0.46	7.5 U	7.5	0.65	6.3 U	6.3	0.54
1,2,3-Trichlorobenzene	---	9.4 UJ	9.4	0.57	6.2 U	6.2	0.38	5.4 U	5.4	0.33	7.5 U	7.5	0.46	6.3 U	6.3	0.39
SEMIVOLATILES (µg/kg)																
Method SW8270D																
Phenol	1,900,000	**56**	19	5.7	19 U	19	5.8	18 U	18	5.6	**15** J	18	5.6	19 U	19	8.2
Bis-(2-Chloroethyl) Ether	---	19 U	19	1.8	19 U	19	1.9	18 U	18	1.8	18 U	18	1.8	19 U	19	3.2
2-Chlorophenol	---	19 U	19	3.3	19 U	19	3.4	18 U	18	3.3	18 U	18	3.3	19 U	19	2.3
1,3-Dichlorobenzene	3,840	19 U	19	2.3	19 U	19	2.3	18 U	18	2.3	18 U	18	2.3	19 U	19	2.5
1,4-Dichlorobenzene	3,500	19 U	19	1.4	19 U	19	1.4	18 U	18	1.4	18 U	18	1.4	19 U	19	2.7
Benzyl Alcohol	8,000,000	**160**	19	1.6	19 U	19	1.6	18 U	18	1.6	**68**	18	1.6	19 U	19	5.8
1,2-Dichlorobenzene	68,000	19 U	19	1.5	19 U	19	1.5	18 U	18	1.4	18 U	18	1.4	19 U	19	2.4
2-Methylphenol	250,000	19 U	19	2.0	19 U	19	2.0	18 U	18	2.0	18 U	18	2.0	19 U	19	5.0
2,2'-Oxybis(1-Chloropropane)	---	19 U	19	1.6	19 U	19	1.7	18 U	18	1.6	18 U	18	1.6	19 U	19	3.6
4-Methylphenol	41,000	**65**	19	4.7	19 U	19	4.8	18 U	18	4.6	**10** J	18	4.6	38 U	38	6.3
N-Nitroso-Di-N-Propylamine	---	19 U	19	4.1	19 U	19	4.2	18 U	18	4.1	18 U	18	4.1	19 U	19	3.2
Hexachloroethane	---	19 U	19	2.6	19 U	19	2.6	18 U	18	2.5	18 U	18	2.5	19 U	19	2.8
Nitrobenzene	---	19 U	19	4.1	19 U	19	4.2	18 U	18	4.1	18 U	18	4.1	19 U	19	3.9
Isophorone	---	19 U	19	0.8	19 U	19	0.8	18 U	18	0.8	18 U	18	0.8	19 U	19	2.7
2-Nitrophenol	---	94 U	94	11	96 U	96	12	92 U	92	11	93 U	93	11	95 U	95	37
2,4-Dimethylphenol	95,000	19 U	19	1.8	19 U	19	1.8	18 U	18	1.7	18 U	18	1.7	38 U	38	3.3
Benzoic Acid	9,000	**530**	190	32	190 U	190	32	180 U	180	31	**210**	180	31	380 U	380	96
bis(2-Chloroethoxy) Methane	---	19 U	19	2.1	19 U	19	2.1	18 U	18	2.0	18 U	18	2.0	19 U	19	1.9
2,4-Dichlorophenol	---	94 U	94	8.6	96 U	96	8.8	92 U	92	8.5	93 U	93	8.5	190 U	190	20
1,2,4-Trichlorobenzene	80	19 U	19	2.8	19 U	19	2.9	18 U	18	2.8	18 U	18	2.8	19 U	19	3.3
Naphthalene	2,100	**62**	19	1.8	19 U	19	1.8	18 U	18	1.8	**12** J	18	1.8	19 U	19	2.6
4-Chloroaniline	---	94 U	94	5.5	96 U	96	5.6	92 U	92	5.4	93 U	93	5.4	260 U	260	21
Hexachlorobutadiene	---	19 U	19	3.5	19 U	19	3.5	18 U	18	3.4	18 U	18	3.4	95 U	95	4.4
4-Chloro-3-methylphenol	740,000	94 U	94	8.0	96 U	96	8.1	92 U	92	7.8	93 U	93	7.9	95 U	95	14
2-Methylnaphthalene	320,000	**29**	19	2.3	19 U	19	2.3	18 U	18	2.2	18 U	18	2.2	19 U	19	2.9
Hexachlorocyclopentadiene	---	94 U	94	5.5	96 U	96	5.6	92 U	92	5.4	93 U	93	5.4	380 U	380	63
2,4,6-Trichlorophenol	---	94 U	94	6.7	96 U	96	6.8	92 U	92	6.6	93 U	93	6.6	95 U	95	21
2,4,5-Trichlorophenol	---	94 U	94	14	96 U	96	14	92 U	92	14	93 U	93	14	95 U	95	20
2-Chloronaphthalene	---	19 U	19	1.3	19 U	19	1.3	18 U	18	1.3	18 U	18	1.3	19 U	19	2.5
2-Nitroaniline	---	94 U	94	7.7	96 U	96	7.8	92 U	92	7.6	93 U	93	7.6	95 U	95	18
Dimethylphthalate	71	19 U	19	3.1	19 U	19	3.1	18 U	18	3.0	18 U	18	3.0	19 U	19	2.8
Acenaphthylene	---	19 U	19	1.8	19 U	19	1.8	18 U	18	1.8	18 U	18	1.8	19 U	19	5.4
3-Nitroaniline	---	94 U	94	5.5	96 U	96	5.6	92 U	92	5.4	93 U	93	5.5	95 U	95	21
Acenaphthene	230,000	**11** J	19	1.6	19 U	19	1.6	18 U	18	1.5	18 U	18	1.5	19 U	19	3.1
2,4-Dinitrophenol	---	200 U	200	6.4	200 U	200	6.5	200 U	200	6.3	200 U	200	6.3	810 U	810	110
4-Nitrophenol	---	94 U	94	11	96 U	96	11	92 U	92	11	93 U	93	11	95 U	95	33
Dibenzofuran	80,000	19 U	19	1.8	19 U	19	1.8	18 U	18	1.7	18 U	18	1.7	19 U	19	3.9
2,6-Dinitrotoluene	---	94 U	94	9.5	96 U	96	9.7	92 U	92	9.3	93 U	93	9.4	95 U	95	29

TABLE M-3
MONITORING WELL BORINGS SOIL ANALYTICAL RESULTS
BOEING ISAACSON-THOMPSON
REMEDIAL INVESTIGATION

	Preliminary Cleanup Level	IT-MW-2 (8-9) SU07C 04/26/2011			IT-MW-3 (2-3) SU07D 04/26/2011			IT-MW-3 (5-6) SU07E 04/26/2011			IT-MW-3 (9-10) SU07F 04/26/2011			IT-MW-4(2-3.5) TW27F 11/08/2011		
		Result	Reporting Limit	Detection Limit	Result	Reporting Limit	Detection Limit	Result	Reporting Limit	Detection Limit	Result	Reporting Limit	Detection Limit	Result	Reporting Limit	Detection Limit
2,4-Dinitrotoluene	---	94 U	94	9.2	96 U	96	9.4	92 U	92	9.1	93 U	93	9.1	95 U	95	19
Diethylphthalate	178,000	19 U	19	4.6	19 U	19	4.6	18 U	18	4.5	18 U	18	4.5	48 U	48	35
4-Chlorophenyl-phenylether	---	19 U	19	1.6	19 U	19	1.7	18 U	18	1.6	18 U	18	1.6	19 U	19	5.0
Fluorene	150,000	**20**	19	1.5	19 U	19	1.5	18 U	18	1.5	18 U	18	1.5	19 U	19	4.1
4-Nitroaniline	---	94 U	94	5.8	96 U	96	5.9	92 U	92	5.7	93 U	93	5.8	95 U	95	36
4,6-Dinitro-2-Methylphenol	---	190 U	190	20	190 U	190	21	180 U	180	20	180 U	180	20	190 U	190	20
N-Nitrosodiphenylamine	204,000	19 U	19	4.6	19 U	19	4.7	18 U	18	4.5	18 U	18	4.5	19 U	19	5.1
4-Bromophenyl-phenylether	---	19 U	19	3.0	19 U	19	3.1	18 U	18	3.0	18 U	18	3.0	19 U	19	4.8
Hexachlorobenzene	---	19 U	19	1.8	19 U	19	1.8	18 U	18	1.8	18 U	18	1.8	19 U	19	4.1
Pentachlorophenol	---	94 U	94	9.0	96 U	96	9.2	92 U	92	8.9	93 U	93	8.9	190 U	190	46
Phenanthrene	---	**64**	19	2.4	**10** J	19	2.4	18 U	18	2.4	**10** J	18	2.4	19 U	19	3.5
Carbazole	50,000	19 U	19	2.3	19 U	19	2.4	18 U	18	2.3	18 U	18	2.3	19 U	19	2.6
Anthracene	1,600,000	**16** J	19	2.0	19 U	19	2.0	18 U	18	2.0	18 U	18	2.0	19 U	19	4.3
Di-n-Butylphthalate	26,000	19 U	19	2.0	19 U	19	2.1	18 U	18	2.0	18 U	18	2.0	19 U	19	7.8
Fluoranthene	230,000	**60** J	19	1.9	19 U	19	1.9	18 U	18	1.9	18 U	18	1.9	19 U	19	2.8
Pyrene	240,000	**53**	19	1.4	19 U	19	1.4	18 U	18	1.3	18 U	18	1.4	19 U	19	1.8
Butylbenzylphthalate	1,700	19 U	19	2.4	19 U	19	2.4	18 U	18	2.3	18 U	18	2.4	**9.5** J1	19	5.9
3,3'-Dichlorobenzidine	---	94 U	94	7.6	96 U	96	7.8	92 U	92	7.5	93 U	93	7.5	140 U	140	17
Benzo(a)anthracene	---	**16** J	19	2.2	19 U	19	2.3	18 U	18	2.2	18 U	18	2.2	19 U	19	3.1
bis(2-Ethylhexyl)phthalate	56,600	**29**	19	3.8	**10** J	19	3.9	**10** J	18	3.8	**33**	18	3.8	**15** J1	24	14
Chrysene	---	**26**	19	1.8	19 U	19	1.8	18 U	18	1.7	18 U	18	1.8	19 U	19	3.6
Di-n-Octyl phthalate	---	19 U	19	3.4	19 U	19	3.4	18 U	18	3.3	18 U	18	3.3	19 U	19	5.6
Benzo(a)pyrene	---	**11** J	19	1.6	19 U	19	1.6	18 U	18	1.6	18 U	18	1.6	19 U	19	5.2
Indeno(1,2,3-cd)pyrene	---	19 U	19	2.2	19 U	19	2.2	18 U	18	2.1	18 U	18	2.1	19 U	19	4.5
Dibenz(a,h)anthracene	---	19 U	19	2.1	19 U	19	2.2	18 U	18	2.1	18 U	18	2.1	19 U	19	4.1
Benzo(g,h,i)perylene	---	**12** J	19	2.6	**12** J	19	2.6	18 U	18	2.6	18 U	18	2.6	19 U	19	4.2
1-Methylnaphthalene	16,000	**22**	19	1.2	19 U	19	1.2	18 U	18	1.2	18 U	18	1.2	19 U	19	2.6
Total Benzofluoranthenes	---	**36**	19	2.6	19 U	19	2.6	18 U	18	2.5	18 U	18	2.5	19 U	19	2.6
cPAH TEQ	15	**16**	NA	NA	ND	NA	NA	ND	NA	NA	ND	NA	NA	ND	NA	NA
PAHs (µg/kg)																
Method SW8270D-SIM																
Naphthalene	2,100	**57**	4.8	1.6	4.8 U	4.8	1.6	4.6 U	4.6	1.5	**14**	4.7	1.6	4.7 U	4.7	2.5
2-Methylnaphthalene	320,000	**45**	4.8	1.3	4.8 U	4.8	1.3	4.6 U	4.6	1.2	4.7 U	4.7	1.3	4.7 U	4.7	1.4
1-Methylnaphthalene	16,000	**36**	4.8	1.6	4.8 U	4.8	1.6	4.6 U	4.6	1.6	4.7 U	4.7	1.6	4.7 U	4.7	1.6
Total Naphthalenes	---	**138**	NA	NA	ND	NA	NA	ND	NA	NA	**14**	NA	NA	4.7 U	NA	NA
Acenaphthylene	---	**11**	4.8	1.0	4.8 U	4.8	1.0	4.6 U	4.6	1.0	4.7 U	4.7	1.0	4.7 U	4.7	1.2
Acenaphthene	230,000	**27**	4.8	2.0	4.8 U	4.8	2.0	4.6 U	4.6	1.9	4.7 U	4.7	2.0	4.7 U	4.7	1.2
Fluorene	150,000	**25**	4.8	1.2	4.8 U	4.8	1.2	4.6 U	4.6	1.2	4.7 U	4.7	1.2	4.7 U	4.7	1.2
Phenanthrene	---	**96**	4.8	1.5	**11**	4.8	1.6	**6.3**	4.6	1.5	**13**	4.7	1.5	**3.0** J1	4.7	1.9
Anthracene	1,600,000	**19**	4.8	0.82	4.8 U	4.8	0.82	4.6 U	4.6	0.79	4.7 U	4.7	0.81	4.7 U	4.7	1.4
Fluoranthene	230,000	**90**	4.8	1.7	**6.4**	4.8	1.7	4.6 U	4.6	1.7	**7.0**	4.7	1.7	**2.7** J1	4.7	1.7
Pyrene	240,000	**97**	4.8	1.0	**10**	4.8	1.0	**5.0**	4.6	0.97	**7.2**	4.7	1.0	**2.7** J1	4.7	2.1
Benzo(a)anthracene	---	**29**	4.8	1.3	**7.5**	4.8	1.3	4.6 U	4.6	1.3	4.7 U	4.7	1.3	4.7 U	4.7	1.5
Chrysene	---	**40**	4.8	1.6	**23**	4.8	1.6	**5.9**	4.6	1.6	**4.7**	4.7	1.6	4.7 U	4.7	1.8
Benzo(a)pyrene	---	4.8 U	4.8	0.89	**11**	4.8	0.90	4.6 U	4.6	0.86	4.7 U	4.7	0.89	4.7 U	4.7	1.6
Indeno(1,2,3-cd)pyrene	---	**9.2**	4.8	1.9	4.8 U	4.8	1.9	4.6 U	4.6	1.9	4.7 U	4.7	1.9	4.7 U	4.7	3.3
Dibenz(a,h)anthracene	---	4.8 U	4.8	1.3	4.8 U	4.8	1.3	4.6 U	4.6	1.2	4.7 U	4.7	1.3	4.7 U	4.7	2.2
Benzo(g,h,i)perylene	---	**14**	4.8	0.86	**13**	4.8	0.87	**4.9**	4.6	0.84	4.7 U	4.7	0.86	4.7 U	4.7	2.9
Dibenzofuran	80,000	**26**	4.8	1.3	4.8 U	4.8	1.3	4.6 U	4.6	1.2	4.7 U	4.7	1.3	4.7 U	4.7	1.4
Total Benzofluoranthenes	---	**51**	4.8	1.8	**20**	4.8	1.8	4.6 U	4.6	1.7	4.7 U	4.7	1.8	4.7 U	4.7	1.7
cPAH TEQ	15	**9.32**	NA	NA	**13.98**	NA	NA	**0.059**	NA	NA	**0.047**	NA	NA	ND	NA	NA

TABLE M-3
MONITORING WELL BORINGS SOIL ANALYTICAL RESULTS
BOEING ISAACSON-THOMPSON
REMEDIAL INVESTIGATION

	Preliminary Cleanup Level	IT-MW-2 (8-9) SU07C 04/26/2011			IT-MW-3 (2-3) SU07D 04/26/2011			IT-MW-3 (5-6) SU07E 04/26/2011			IT-MW-3 (9-10) SU07F 04/26/2011			IT-MW-4(2-3.5) TW27F 11/08/2011		
		Result	Reporting Limit	Detection Limit	Result	Reporting Limit	Detection Limit	Result	Reporting Limit	Detection Limit	Result	Reporting Limit	Detection Limit	Result	Reporting Limit	Detection Limit
PCBs (µg/kg)																
Method SW8082																
Aroclor 1016	0.72	32 UJ	32	2.0	30 U	30	9.2	32 U	32	1.9	31 U	31	1.9	32 U	32	1.9
Aroclor 1242	0.72	32 UJ	32	2.4	30 U	30	11	32 U	32	2.4	31 U	31	2.3	32 U	32	2.4
Aroclor 1248	220	32 UJ	32	2.4	30 U	30	11	32 U	32	2.4	31 U	31	2.3	32 U	32	2.4
Aroclor 1254	0.29	32 UJ	32	2.4	30 U	30	11	32 U	32	2.4	31 U	31	2.3	32 U	32	2.4
Aroclor 1260	5.4	32 UJ	32	2.4	30 U	30	11	32 U	32	2.4	31 U	31	2.3	32 U	32	2.4
Aroclor 1221	---	32 UJ	32	2.4	30 U	30	11	32 U	32	2.4	31 U	31	2.3	32 U	32	2.4
Aroclor 1232	---	32 UJ	32	2.4	30 U	30	11	32 U	32	2.4	31 U	31	2.3	32 U	32	2.4
Total PCBs	1.8	ND	NA	NA	ND	NA	NA	ND	NA	NA	ND	NA	NA	ND	NA	NA
TOTAL PETROLEUM HYDROCARBONS (mg/kg)																
NWTPH-Dx																
Diesel-Range Organics	2,000	**15**	7.6	1.1	**15**	5.2	0.78	**6.0**	5.0	0.72	6.6 U	6.6	0.97	5.2 U	5.2	1.3
Motor Oil-Range Organics	2,000	**40**	15	2.0	**150**	10	1.4	**42**	10	1.3	13 U	13	1.7	10 U	10	1.6
NWTPH-G																
Gasoline-Range Organics	100/30	13 U	13	6.0	7.4 U	7.4	3.5	6.1 U	6.1	2.9	10 U	10	4.8	6.8 U	6.8	3.3
TOTAL METALS (mg/kg)																
Methods 200.8/7471A/SW7196A																
Antimony	5	0.3 U	0.3	0.020	0.2 U	0.2	0.014	0.2 U	0.2	0.013	0.2 U	0.2	0.016	0.2 U	0.2	0.013
Arsenic	7	**11.4**	0.3	0.014	**2.8**	0.2	0.092	**3.4**	0.2	0.088	**5.5**	0.2	0.11	**4.1**	0.2	0.089
Barium	640	**81.6**	0.8	0.087	**48.6**	0.5	0.059	**44.0**	0.5	0.057	**81.8**	0.6	0.070	**57.5**	0.5	0.058
Beryllium	160	**0.5**	0.3	0.028	0.2 U	0.2	0.019	0.2 U	0.2	0.018	**0.3**	0.2	0.022	**0.2**	0.2	0.018
Cadmium	1.3	**0.9**	0.2	0.019	0.1 U	0.1	0.013	**0.1**	0.1	0.012	**0.1**	0.1	0.015	0.1 U	0.1	0.012
Chromium	1,480	**24.6**	0.8	0.059	**12.2**	0.5	0.040	**11.3**	0.5	0.038	**18.7**	0.6	0.047	**9.9**	0.5	0.039
Chromium VI	3.8	0.645 U	0.645	0.030	0.429 U	0.429	0.030	0.410 U	0.410	0.030	0.530 U	0.530	0.030	0.402 U	0.402	0.030
Copper	36	**42.5**	0.8	0.056	**21.1**	0.5	0.038	**14.9**	0.5	0.036	**28.3**	0.6	0.045	**26.0**	0.5	0.037
Lead	250	**15.3**	0.2	0.073	**6.7**	0.1	0.049	**3.5**	0.1	0.047	**5.0**	0.1	0.059	**4.0**	0.1	0.048
Mercury	1.5	**0.16**	0.03	0.0015	**0.02**	0.02	0.0010	**0.02**	0.02	0.0010	**0.08**	0.03	0.0017	0.02 U	0.02	0.0010
Nickel	210	**23.1**	0.8	0.076	**13.7**	0.5	0.052	**14.6**	0.5	0.049	**19.3**	0.6	0.061	**15.9**	0.5	0.050
Selenium	1.0	0.8 U	0.8	0.15	0.5 U	0.5	0.10	0.5 U	0.5	0.10	0.6 U	0.6	0.12	0.5 U	0.5	0.10
Silver	170	0.3 U	0.3	0.012	0.2 U	0.2	0.0084	0.2 U	0.2	0.0081	0.2 U	0.2	0.010	0.2 U	0.2	0.0082
Thallium	0.67	0.3 U	0.3	0.0047	0.2 U	0.2	0.0032	0.2 U	0.2	0.0030	0.2 U	0.2	0.0037	0.2 U	0.2	0.0031
Zinc	1,400	**94**	6	0.53	**36**	4	0.36	**40**	4	0.34	**69**	5	0.42	**38**	4	0.35

TABLE M-3
MONITORING WELL BORINGS SOIL ANALYTICAL RESULTS
BOEING ISAACSON-THOMPSON
REMEDIAL INVESTIGATION

	Preliminary Cleanup Level	IT-MW-4(5-6.5) TW27G 11/08/2011			IT-MW-4(8-9.5) TW27H 11/08/2011			IT-MW-4(13.5-15) TW27I 11/08/2011			IT-MW-5(2-3.5) TU90A 11/01/2011			IT-MW-5(5-6.5) TU90B 11/01/2011		
		Result	Reporting Limit	Detection Limit	Result	Reporting Limit	Detection Limit	Result	Reporting Limit	Detection Limit	Result	Reporting Limit	Detection Limit	Result	Reporting Limit	Detection Limit
VOLATILES (µg/kg)																
Method SW8260C																
Chloromethane	1,600	1.3 U	1.3	0.35	1.1 U	1.1	0.29	1.2 U	1.2	0.31	1.2 U	1.2	0.32	1.4 U	1.4	0.36
Bromomethane	---	1.3 UJ	1.3	0.25	1.1 UJ	1.1	0.21	1.2 UJ	1.2	0.22	1.2 UJ	1.2	0.23	1.4 UJ	1.4	0.25
Vinyl Chloride	7.4	1.3 U	1.3	0.31	1.1 U	1.1	0.26	1.2 U	1.2	0.27	1.2 U	1.2	0.29	1.4 U	1.4	0.32
Chloroethane	280,000	1.3 U	1.3	0.61	1.1 U	1.1	0.51	1.2 U	1.2	0.54	1.2 U	1.2	0.57	1.4 U	1.4	0.63
Methylene Chloride	2400	**4.7**	2.6	0.83	**2.6**	2.2	0.71	**3.0**	2.3	0.74	**1.7** J, J1	2.4	0.78	**1.7** J1	2.7	0.86
Acetone	510,000	**25** J	6.6	0.63	**11** J	5.6	0.54	**27** J	5.8	0.56	26 UJ	6.1	0.59	**55** J	6.8	0.65
Carbon Disulfide	75,000	1.3 U	1.3	0.73	**0.7** J1	1.1	0.62	1.2 U	1.2	0.65	1.2 UJ	1.2	0.69	1.4 U	1.4	0.76
1,1-Dichloroethene	81	1.3 U	1.3	0.44	1.1 U	1.1	0.37	1.2 U	1.2	0.39	1.2 UJ	1.2	0.41	1.4 U	1.4	0.46
1,1-Dichloroethane	710	1.3 UJ	1.3	0.27	1.1 UJ	1.1	0.23	1.2 UJ	1.2	0.24	1.2 UJ	1.2	0.25	1.4 U	1.4	0.28
trans-1,2-Dichloroethene	19,000	1.3 U	1.3	0.35	1.1 U	1.1	0.3	1.2 U	1.2	0.31	1.2 UJ	1.2	0.33	1.4 U	1.4	0.36
cis-1,2-Dichloroethene	2,600	1.3 U	1.3	0.31	1.1 U	1.1	0.27	1.2 U	1.2	0.28	1.2 UJ	1.2	0.29	1.4 U	1.4	0.33
Chloroform	200	1.3 U	1.3	0.31	1.1 U	1.1	0.26	1.2 U	1.2	0.27	1.2 UJ	1.2	0.29	1.4 U	1.4	0.32
1,2-Dichloroethane	70	1.3 U	1.3	0.25	1.1 U	1.1	0.21	1.2 U	1.2	0.22	1.2 UJ	1.2	0.23	1.4 U	1.4	0.26
2-Butanone	430,000	6.6 U	6.6	0.67	5.6 U	5.6	0.57	5.8 U	5.8	0.60	6.1 UJ	6.1	0.63	**4.3** J1	6.8	0.70
1,1,1-Trichloroethane	1,900,000	1.3 U	1.3	0.30	1.1 U	1.1	0.25	1.2 U	1.2	0.26	1.2 UJ	1.2	0.28	**1.9**	1.4	0.31
Carbon Tetrachloride	21	1.3 U	1.3	0.28	1.1 U	1.1	0.24	1.2 U	1.2	0.25	1.2 UJ	1.2	0.26	1.4 U	1.4	0.29
Vinyl Acetate	---	6.6 U	6.6	0.50	5.6 U	5.6	0.42	5.8 U	5.8	0.45	6.1 U	6.1	0.47	6.8 U	6.8	0.52
Bromodichloromethane	89	1.3 U	1.3	0.33	1.1 U	1.1	0.28	1.2 U	1.2	0.30	1.2 UJ	1.2	0.31	1.4 U	1.4	0.35
1,2-Dichloropropane	92	1.3 U	1.3	0.21	1.1 U	1.1	0.18	1.2 U	1.2	0.19	1.2 UJ	1.2	0.20	1.4 U	1.4	0.22
cis-1,3-Dichloropropene	---	1.3 U	1.3	0.30	1.1 U	1.1	0.25	1.2 U	1.2	0.26	1.2 UJ	1.2	0.28	1.4 U	1.4	0.31
Trichloroethene	51	1.3 U	1.3	0.28	1.1 U	1.1	0.24	1.2 U	1.2	0.25	**1.3** J	1.2	0.26	**1.0** J1	1.4	0.29
Dibromochloromethane	---	1.3 U	1.3	0.35	1.1 U	1.1	0.30	1.2 U	1.2	0.31	1.2 UJ	1.2	0.33	1.4 U	1.4	0.36
1,1,2-Trichloroethane	73	1.3 U	1.3	0.38	1.1 U	1.1	0.32	1.2 U	1.2	0.33	1.2 UJ	1.2	0.35	1.4 U	1.4	0.39
Benzene	93	1.3 U	1.3	0.39	1.1 U	1.1	0.33	1.2 U	1.2	0.35	1.2 UJ	1.2	0.36	**1.1** J1	1.4	0.40
trans-1,3-Dichloropropene	---	1.3 U	1.3	0.28	1.1 U	1.1	0.24	1.2 U	1.2	0.25	1.2 UJ	1.2	0.26	1.4 U	1.4	0.29
2-Chloroethylvinylether	---	6.6 U	6.6	0.36	5.6 U	5.6	0.31	5.8 U	5.8	0.32	6.1 U	6.1	0.34	6.8 U	6.8	0.38
Bromoform	---	1.3 U	1.3	0.39	1.1 U	1.1	0.33	1.2 U	1.2	0.35	1.2 UJ	1.2	0.36	1.4 U	1.4	0.40
4-Methyl-2-Pentanone (MIBK)	170,000	6.6 U	6.6	0.55	5.6 U	5.6	0.47	5.8 U	5.8	0.49	6.1 UJ	6.1	0.51	6.8 U	6.8	0.57
2-Hexanone	32,000	6.6 U	6.6	0.58	5.6 U	5.6	0.49	5.8 U	5.8	0.51	6.1 UJ	6.1	0.54	6.8 U	6.8	0.60
Tetrachloroethene	260	1.3 U	1.3	0.34	1.1 U	1.1	0.29	1.2 U	1.2	0.30	1.2 UJ	1.2	0.31	1.4 U	1.4	0.35
1,1,2,2-Tetrachloroethane	13	1.3 U	1.3	0.33	1.1 U	1.1	0.28	1.2 U	1.2	0.30	1.2 UJ	1.2	0.31	1.4 U	1.4	0.34
Toluene	100,000	1.3 U	1.3	0.20	1.1 U	1.1	0.17	1.2 U	1.2	0.18	1.2 UJ	1.2	0.19	1.4 U	1.4	0.21
Chlorobenzene	26,000	1.3 U	1.3	0.29	1.1 U	1.1	0.24	1.2 U	1.2	0.26	1.2 UJ	1.2	0.27	1.4 U	1.4	0.30
Ethylbenzene	230	1.3 U	1.3	0.27	1.1 U	1.1	0.22	1.2 U	1.2	0.24	1.2 UJ	1.2	0.25	1.4 U	1.4	0.27
Styrene	16,000,000	1.3 U	1.3	0.18	1.1 U	1.1	0.15	1.2 U	1.2	0.16	1.2 UJ	1.2	0.17	1.4 U	1.4	0.19
Trichlorofluoromethane	200,000	1.3 U	1.3	0.35	1.1 U	1.1	0.30	1.2 U	1.2	0.31	1.2 U	1.2	0.33	1.4 U	1.4	0.36
1,1,2-Trichloro-1,2,2-trifuoroethane	1,000,000,000	2.6 U	2.6	0.38	2.2 U	2.2	0.32	2.3 U	2.3	0.34	2.4 UJ	2.4	0.35	2.7 U	2.7	0.39
m,p-Xylene	160,000	1.3 U	1.3	0.51	1.1 U	1.1	0.44	1.2 U	1.2	0.46	1.2 UJ	1.2	0.48	1.4 U	1.4	0.53
o-Xylene	200,000	1.3 U	1.3	0.29	1.1 U	1.1	0.25	1.2 U	1.2	0.26	1.2 UJ	1.2	0.27	1.4 U	1.4	0.30
1,2-Dichlorobenzene	68,000	1.3 U	1.3	0.38	1.1 U	1.1	0.33	1.2 U	1.2	0.34	1.2 UJ	1.2	0.36	1.4 U	1.4	0.40
1,3-Dichlorobenzene	3,840	1.3 U	1.3	0.30	1.1 U	1.1	0.25	1.2 U	1.2	0.27	1.2 UJ	1.2	0.28	1.4 U	1.4	0.31
1,4-Dichlorobenzene	3,500	1.3 U	1.3	0.30	1.1 U	1.1	0.26	1.2 U	1.2	0.27	1.2 UJ	1.2	0.28	1.4 U	1.4	0.32
Acrolein	---	66 UJ	66	5.0	56 UJ	56	4.2	58 UJ	58	4.5	61 UJ	61	4.7	68 U	68	5.2
Methyl Iodide	---	1.3 U	1.3	0.28	1.1 U	1.1	0.24	1.2 U	1.2	0.25	1.2 UJ	1.2	0.26	1.4 U	1.4	0.29
Bromoethane	---	2.6 U	2.6	0.58	2.2 U	2.2	0.49	2.3 U	2.3	0.51	2.4 UJ	2.4	0.54	2.7 U	2.7	0.60
Acrylonitrile	---	6.6 U	6.6	1.4	5.6 U	5.6	1.1	5.8 U	5.8	1.2	6.1 UJ	6.1	1.3	6.8 U	6.8	1.4
1,1-Dichloropropene	---	1.3 U	1.3	0.41	1.1 U	1.1	0.35	1.2 U	1.2	0.36	1.2 UJ	1.2	0.38	1.4 U	1.4	0.42
Dibromomethane	---	1.3 U	1.3	0.19	1.1 U	1.1	0.16	1.2 U	1.2	0.17	1.2 UJ	1.2	0.18	1.4 U	1.4	0.20
1,1,1,2-Tetrachloroethane	---	1.3 U	1.3	0.31	1.1 U	1.1	0.26	1.2 U	1.2	0.27	1.2 UJ	1.2	0.29	1.4 U	1.4	0.32
1,2-Dibromo-3-chloropropane	---	6.6 U	6.6	0.77	5.6 U	5.6	0.65	5.8 U	5.8	0.68	6.1 UJ	6.1	0.72	6.8 U	6.8	0.80
1,2,3-Trichloropropane	---	2.6 U	2.6	0.68	2.2 U	2.2	0.58	2.3 U	2.3	0.60	2.4 UJ	2.4	0.63	2.7 U	2.7	0.70
trans-1,4-Dichloro-2-butene	---	6.6 U	6.6	0.57	5.6 U	5.6	0.49	5.8 U	5.8	0.51	6.1 UJ	6.1	0.54	6.8 U	6.8	0.59
1,3,5-Trimethylbenzene	800,000	1.3 U	1.3	0.33	1.1 U	1.1	0.28	1.2 U	1.2	0.30	1.2 UJ	1.2	0.31	1.4 U	1.4	0.35
1,2,4-Trimethylbenzene	800,000	1.3 U	1.3	0.30	1.1 U	1.1	0.26	1.2 U	1.2	0.27	1.2 UJ	1.2	0.28	1.4 U	1.4	0.31
Hexachlorobutadiene	---	6.6 U	6.6	0.54	5.6 U	5.6	0.46	5.8 U	5.8	0.48	6.1 UJ	6.1	0.5	6.8 U	6.8	0.56

TABLE M-3
MONITORING WELL BORINGS SOIL ANALYTICAL RESULTS
BOEING ISAACSON-THOMPSON
REMEDIAL INVESTIGATION

	Preliminary Cleanup Level	IT-MW-4(5-6.5) TW27G 11/08/2011			IT-MW-4(8-9.5) TW27H 11/08/2011			IT-MW-4(13.5-15) TW27I 11/08/2011			IT-MW-5(2-3.5) TU90A 11/01/2011			IT-MW-5(5-6.5) TU90B 11/01/2011		
		Result	Reporting Limit	Detection Limit	Result	Reporting Limit	Detection Limit	Result	Reporting Limit	Detection Limit	Result	Reporting Limit	Detection Limit	Result	Reporting Limit	Detection Limit
Ethylene Dibromide	---	1.3 U	1.3	0.23	1.1 U	1.1	0.20	1.2 U	1.2	0.21	1.2 UJ	1.2	0.22	1.4 U	1.4	0.24
Bromochloromethane	---	1.3 U	1.3	0.42	1.1 U	1.1	0.36	1.2 U	1.2	0.38	1.2 UJ	1.2	0.40	1.4 U	1.4	0.44
2,2-Dichloropropane	---	1.3 U	1.3	0.38	1.1 U	1.1	0.33	1.2 U	1.2	0.34	1.2 U	1.2	0.36	1.4 U	1.4	0.40
1,3-Dichloropropane	---	1.3 U	1.3	0.27	1.1 U	1.1	0.23	1.2 U	1.2	0.24	1.2 UJ	1.2	0.26	1.4 U	1.4	0.28
Isopropylbenzene	78,000	1.3 U	1.3	0.31	1.1 U	1.1	0.26	1.2 U	1.2	0.27	1.2 UJ	1.2	0.29	1.4 U	1.4	0.32
n-Propylbenzene	11,000	1.3 U	1.3	0.36	1.1 U	1.1	0.30	1.2 U	1.2	0.32	1.2 UJ	1.2	0.33	1.4 U	1.4	0.37
Bromobenzene	---	1.3 U	1.3	0.20	1.1 U	1.1	0.17	1.2 U	1.2	0.18	1.2 UJ	1.2	0.19	1.4 U	1.4	0.21
2-Chlorotoluene	---	1.3 U	1.3	0.39	1.1 U	1.1	0.33	1.2 U	1.2	0.35	1.2 UJ	1.2	0.37	1.4 U	1.4	0.41
4-Chlorotoluene	400,000	1.3 U	1.3	0.36	1.1 U	1.1	0.31	1.2 U	1.2	0.32	1.2 UJ	1.2	0.34	1.4 U	1.4	0.38
tert-Butylbenzene	---	1.3 U	1.3	0.40	1.1 U	1.1	0.34	1.2 U	1.2	0.36	1.2 UJ	1.2	0.38	1.4 U	1.4	0.42
sec-Butylbenzene	---	1.3 U	1.3	0.31	1.1 U	1.1	0.27	1.2 U	1.2	0.28	1.2 UJ	1.2	0.29	1.4 U	1.4	0.33
4-Isopropyltoluene	---	1.3 U	1.3	0.31	1.1 U	1.1	0.26	1.2 U	1.2	0.28	1.2 UJ	1.2	0.29	1.4 U	1.4	0.32
n-Butylbenzene	27,000	1.3 U	1.3	0.34	1.1 U	1.1	0.29	1.2 U	1.2	0.31	1.2 UJ	1.2	0.32	1.4 U	1.4	0.36
1,2,4-Trichlorobenzene	80	6.6 U	6.6	0.44	5.6 U	5.6	0.37	5.8 U	5.8	0.39	6.1 UJ	6.1	0.41	6.8 U	6.8	0.45
Naphthalene	2,100	6.6 U	6.6	0.56	5.6 U	5.6	0.48	5.8 U	5.8	0.50	6.1 UJ	6.1	0.53	6.8 U	6.8	0.58
1,2,3-Trichlorobenzene	---	6.6 U	6.6	0.40	5.6 U	5.6	0.34	5.8 U	5.8	0.36	6.1 UJ	6.1	0.37	6.8 U	6.8	0.41
SEMIVOLATILES (µg/kg)																
Method SW8270D																
Phenol	1,900,000	20 U	20	8.4	20 U	20	8.5	19 U	19	8.2	19 U	19	8.3	18 U	18	7.7
Bis-(2-Chloroethyl) Ether	---	20 U	20	3.3	20 U	20	3.3	19 U	19	3.2	19 U	19	3.2	18 U	18	3.0
2-Chlorophenol	---	20 U	20	2.3	20 U	20	2.3	19 U	19	2.3	19 U	19	2.3	18 U	18	2.1
1,3-Dichlorobenzene	3,840	20 U	20	2.6	20 U	20	2.6	19 U	19	2.5	19 U	19	2.5	18 U	18	2.3
1,4-Dichlorobenzene	3,500	20 U	20	2.8	20 U	20	2.8	19 U	19	2.7	19 U	19	2.7	18 U	18	2.5
Benzyl Alcohol	8,000,000	20 U	20	5.9	20 U	20	6.0	19 U	19	5.7	19 U	19	5.8	18 U	18	5.4
1,2-Dichlorobenzene	68,000	20 U	20	2.4	20 U	20	2.4	19 U	19	2.4	19 U	19	2.4	18 U	18	2.2
2-Methylphenol	250,000	20 U	20	5.1	20 U	20	5.1	19 U	19	4.9	19 U	19	5.0	18 U	18	4.7
2,2'-Oxybis(1-Chloropropane)	---	20 U	20	3.7	20 U	20	3.7	19 U	19	3.5	19 U	19	3.6	18 U	18	3.3
4-Methylphenol	41,000	39 U	39	6.5	39 U	39	6.5	38 U	38	6.2	38 U	38	6.3	36 U	36	5.9
N-Nitroso-Di-N-Propylamine	---	20 U	20	3.3	20 U	20	3.3	19 U	19	3.2	19 U	19	3.2	18 U	18	3.0
Hexachloroethane	---	20 U	20	2.9	20 U	20	2.9	19 U	19	2.8	19 U	19	2.8	18 U	18	2.6
Nitrobenzene	---	20 U	20	4.0	20 U	20	4.0	19 U	19	3.8	19 U	19	3.9	18 U	18	3.6
Isophorone	---	20 U	20	2.8	20 U	20	2.8	19 U	19	2.7	19 U	19	2.7	18 U	18	2.5
2-Nitrophenol	---	98 U	98	38	98 U	98	38	94 U	94	36	96 U	96	37	89 U	89	34
2,4-Dimethylphenol	95,000	39 U	39	3.4	39 U	39	3.4	38 U	38	3.3	38 UJ	38	3.3	36 UJ	36	3.1
Benzoic Acid	9,000	390 U	390	99	390 U	390	99	380 U	380	95	380 UJ	380	97	360 UJ	360	90
bis(2-Chloroethoxy) Methane	---	20 U	20	2.0	20 U	20	2.0	19 U	19	1.9	19 U	19	1.9	18 U	18	1.8
2,4-Dichlorophenol	---	200 U	200	21	200 U	200	21	190 U	190	20	190 U	190	21	180 U	180	19
1,2,4-Trichlorobenzene	80	20 U	20	3.4	20 U	20	3.4	19 U	19	3.3	19 U	19	3.3	18 U	18	3.1
Naphthalene	2,100	20 U	20	2.7	20 U	20	2.7	19 U	19	2.6	19 U	19	2.6	**29**	18	2.5
4-Chloroaniline	---	260 U	260	22	260 U	260	22	250 U	250	21	260 UJ	260	21	240 U	240	20
Hexachlorobutadiene	---	98 U	98	4.5	98 U	98	4.5	94 U	94	4.3	96 U	96	4.4	89 U	89	4.1
4-Chloro-3-methylphenol	740,000	98 U	98	15	98 U	98	15	94 U	94	14	96 U	96	14	89 U	89	13
2-Methylnaphthalene	320,000	20 U	20	3.0	20 U	20	3.0	19 U	19	2.9	19 U	19	2.9	**14** J1	18	2.7
Hexachlorocyclopentadiene	---	390 U	390	65	390 U	390	65	380 U	380	63	380 UJ	380	64	360 UJ	360	59
2,4,6-Trichlorophenol	---	98 U	98	22	98 U	98	22	94 U	94	21	96 U	96	21	89 U	89	20
2,4,5-Trichlorophenol	---	98 U	98	21	98 U	98	21	94 U	94	20	96 U	96	20	89 U	89	19
2-Chloronaphthalene	---	20 U	20	2.6	20 U	20	2.6	19 U	19	2.5	19 U	19	2.5	18 U	18	2.4
2-Nitroaniline	---	98 U	98	18	98 U	98	18	94 U	94	17	96 U	96	18	89 U	89	16
Dimethylphthalate	71	20 U	20	2.8	20 U	20	2.8	19 U	19	2.7	19 U	19	2.8	18 U	18	2.6
Acenaphthylene	---	20 U	20	5.6	20 U	20	5.6	19 U	19	5.4	19 U	19	5.5	18 U	18	5.1
3-Nitroaniline	---	98 U	98	22	98 U	98	22	94 U	94	21	96 U	96	22	89 U	89	20
Acenaphthene	230,000	20 U	20	3.2	20 U	20	3.2	19 U	19	3.1	19 U	19	3.1	18 U	18	2.9
2,4-Dinitrophenol	---	830 U	830	110	830 U	830	110	800 U	800	100	810 U	810	110	760 U	760	99
4-Nitrophenol	---	98 U	98	34	98 U	98	34	94 U	94	33	96 UJ	96	33	89 UJ	89	31
Dibenzofuran	80,000	20 U	20	4.0	20 U	20	4.0	19 U	19	3.9	19 U	19	3.9	**11** J1	18	3.7
2,6-Dinitrotoluene	---	98 U	98	30	98 U	98	30	94 U	94	29	96 U	96	29	89 U	89	27

TABLE M-3
MONITORING WELL BORINGS SOIL ANALYTICAL RESULTS
BOEING ISAACSON-THOMPSON
REMEDIAL INVESTIGATION

	Preliminary Cleanup Level	IT-MW-4(5-6.5) TW27G 11/08/2011			IT-MW-4(8-9.5) TW27H 11/08/2011			IT-MW-4(13.5-15) TW27I 11/08/2011			IT-MW-5(2-3.5) TU90A 11/01/2011			IT-MW-5(5-6.5) TU90B 11/01/2011		
		Result	Reporting Limit	Detection Limit	Result	Reporting Limit	Detection Limit	Result	Reporting Limit	Detection Limit	Result	Reporting Limit	Detection Limit	Result	Reporting Limit	Detection Limit
2,4-Dinitrotoluene	---	98 U	98	19	98 U	98	19	94 U	94	18	96 U	96	19	89 U	89	17
Diethylphthalate	178,000	49 U	49	36	49 U	49	36	47 U	47	34	48 U	48	35	44 U	44	33
4-Chlorophenyl-phenylether	---	20 U	20	5.2	20 U	20	5.2	19 U	19	5.0	19 U	19	5.1	18 U	18	4.7
Fluorene	150,000	20 U	20	4.2	20 U	20	4.3	19 U	19	4.1	19 U	19	4.2	18 U	18	3.9
4-Nitroaniline	---	98 U	98	37	98 U	98	37	94 U	94	36	96 U	96	36	89 U	89	34
4,6-Dinitro-2-Methylphenol	---	200 U	200	21	200 U	200	21	190 U	190	20	190 U	190	20	180 U	180	19
N-Nitrosodiphenylamine	204,000	20 U	20	5.3	20 U	20	5.3	19 U	19	5.1	19 U	19	5.2	18 U	18	4.8
4-Bromophenyl-phenylether	---	20 U	20	4.9	20 U	20	4.9	19 U	19	4.7	19 U	19	4.8	18 U	18	4.5
Hexachlorobenzene	---	20 U	20	4.2	20 U	20	4.2	19 U	19	4.0	19 U	19	4.1	18 U	18	3.8
Pentachlorophenol	---	200 U	200	47	200 U	200	47	190 U	190	46	190 UJ	190	46	180 UJ	180	43
Phenanthrene	---	**51**	20	3.6	**14** J1	20	3.6	19 U	19	3.4	**66**	19	3.5	**55**	18	3.2
Carbazole	50,000	**12** J1	20	2.6	20 U	20	2.6	19 U	19	2.5	19 U	19	2.6	18 U	18	2.4
Anthracene	1,600,000	**11** J1	20	4.4	20 U	20	4.4	19 U	19	4.2	19 U	19	4.3	18 U	18	4.0
Di-n-Butylphthalate	26,000	20 U	20	8.0	20 U	20	8.0	19 U	19	7.7	19 U	19	7.8	18 U	18	7.3
Fluoranthene	230,000	**77**	20	2.8	20 U	20	2.8	19 U	19	2.7	19 U	19	2.8	**49**	18	2.6
Pyrene	240,000	**58**	20	1.9	**15** J1	20	1.9	19 U	19	1.8	19 U	19	1.9	**61**	18	1.7
Butylbenzylphthalate	1,700	20 U	20	6.0	20 U	20	6.0	19 U	19	5.8	19 U	19	5.9	**56**	18	5.5
3,3'-Dichlorobenzidine	---	150 U	150	17	150 U	150	17	140 U	140	17	140 UJ	140	17	130 UJ	130	16
Benzo(a)anthracene	---	**39**	20	3.2	20 U	20	3.2	19 U	19	3.1	19 U	19	3.1	**21**	18	2.9
bis(2-Ethylhexyl)phthalate	56,600	24 U	24	14	**590**	24	14	**33**	24	14	24 U	24	14	34 U	22	13
Chrysene	---	**39**	20	3.7	**25**	20	3.7	19 U	19	3.5	19 U	19	3.6	**41**	18	3.3
Di-n-Octyl phthalate	---	**38**	20	5.7	**99**	20	5.7	19 U	19	5.5	19 U	19	5.6	18 U	18	5.2
Benzo(a)pyrene	---	**35**	20	5.3	**13** J1	20	5.3	19 U	19	5.1	19 U	19	5.2	**24**	18	4.9
Indeno(1,2,3-cd)pyrene	---	**18** J1	20	4.6	20 U	20	4.6	19 U	19	4.4	19 U	19	4.5	**20**	18	4.2
Dibenz(a,h)anthracene	---	20 U	20	4.2	20 U	20	4.2	19 U	19	4.1	19 U	19	4.1	18 U	18	3.8
Benzo(g,h,i)perylene	---	**20**	20	4.3	20 U	20	4.3	19 U	19	4.1	19 U	19	4.2	**25**	18	3.9
1-Methylnaphthalene	16,000	20 U	20	2.6	20 U	20	2.6	19 U	19	2.5	19 U	19	2.6	**11** J1	18	2.4
Total Benzofluoranthenes	---	**64**	20	2.7	**14** J1	20	2.7	19 U	19	2.6	19 U	19	2.6	**49**	18	2.4
cPAH TEQ	15	**47** J	NA	NA	**15** J	NA	NA	ND	NA	NA	ND	NA	NA	**33**	NA	NA
PAHs (µg/kg)																
Method SW8270D-SIM																
Naphthalene	2,100	**4.7** J1	4.9	2.6	**4.5** J1	4.9	2.6	4.8 U	4.8	2.5	**4.4** J1	4.9	2.6	**30**	4.6	2.4
2-Methylnaphthalene	320,000	**7.5**	4.9	1.5	**9.7**	4.9	1.5	4.8 U	4.8	1.5	**5.0**	4.9	1.5	**13**	4.6	1.4
1-Methylnaphthalene	16,000	**7.1**	4.9	1.7	**7.8**	4.9	1.7	4.8 U	4.8	1.6	**5.1**	4.9	1.7	**13**	4.6	1.6
Total Naphthalenes	---	**19.3** J1	NA	NA	**22** J1	NA	NA	4.8 U	NA	NA	**14.5** J1	NA	NA	**56**	NA	NA
Acenaphthylene	---	4.9 U	4.9	1.2	4.9 U	4.9	1.2	4.8 U	4.8	1.2	4.9 U	4.9	1.2	**7.8**	4.6	1.1
Acenaphthene	230,000	4.9 U	4.9	1.3	4.9 U	4.9	1.3	4.8 U	4.8	1.3	4.9 U	4.9	1.3	**14**	4.6	1.2
Fluorene	150,000	4.9 U	4.9	1.3	4.9 U	4.9	1.3	4.8 U	4.8	1.2	4.9 U	4.9	1.3	**18**	4.6	1.2
Phenanthrene	---	**13**	4.9	2.0	**10**	4.9	1.9	4.8 U	4.8	1.9	**8.7**	4.9	1.9	**260**	4.6	1.8
Anthracene	1,600,000	4.9 U	4.9	1.4	4.9 U	4.9	1.4	4.8 U	4.8	1.4	4.9 U	4.9	1.4	**35**	4.6	1.3
Fluoranthene	230,000	**7.2**	4.9	1.7	**5.1**	4.9	1.7	4.8 U	4.8	1.7	**5.9**	4.9	1.7	**360**	4.6	1.6
Pyrene	240,000	**7.2**	4.9	2.2	**6.8**	4.9	2.2	4.8 U	4.8	2.1	**6.2**	4.9	2.2	**330**	4.6	2.0
Benzo(a)anthracene	---	**3.0** J1	4.9	1.6	**5.8**	4.9	1.6	4.8 U	4.8	1.5	**3.4** J1	4.9	1.6	**130**	4.6	1.5
Chrysene	---	**6.6**	4.9	1.9	**19**	4.9	1.8	4.8 U	4.8	1.8	**5.9**	4.9	1.9	**140**	4.6	1.7
Benzo(a)pyrene	---	**3.6** J1	4.9	1.7	**7.5**	4.9	1.7	4.8 U	4.8	1.7	4.9 U	4.9	1.7	**150**	4.6	1.6
Indeno(1,2,3-cd)pyrene	---	4.9 U	4.9	3.4	4.9 U	4.9	3.4	4.8 U	4.8	3.3	**5.6**	4.9	3.4	**78**	4.6	3.2
Dibenz(a,h)anthracene	---	4.9 U	4.9	2.3	4.9 U	4.9	2.3	4.8 U	4.8	2.3	**4.1** J1	4.9	2.3	**26**	4.6	2.2
Benzo(g,h,i)perylene	---	**3.1** J1	4.9	3.0	**8.7**	4.9	3.0	4.8 U	4.8	2.9	**8.5**	4.9	3.0	**90**	4.6	2.8
Dibenzofuran	80,000	**3.2** J1	4.9	1.5	4.9 U	4.9	1.5	4.8 U	4.8	1.4	**2.7** J1	4.9	1.5	**13**	4.6	1.4
Total Benzofluoranthenes	---	**7.0**	4.9	1.8	**8.9**	4.9	1.8	4.8 U	4.8	1.8	4.9 U	4.9	1.8	**210**	4.6	1.7
cPAH TEQ	15	**4.7** J	NA	NA	**9.2**	NA	NA	ND	NA	NA	**1.4** J	NA	NA	**196**	NA	NA

TABLE M-3
MONITORING WELL BORINGS SOIL ANALYTICAL RESULTS
BOEING ISAACSON-THOMPSON
REMEDIAL INVESTIGATION

	Preliminary Cleanup Level	IT-MW-4(5-6.5) TW27G 11/08/2011			IT-MW-4(8-9.5) TW27H 11/08/2011			IT-MW-4(13.5-15) TW27I 11/08/2011			IT-MW-5(2-3.5) TU90A 11/01/2011			IT-MW-5(5-6.5) TU90B 11/01/2011		
		Result	Reporting Limit	Detection Limit	Result	Reporting Limit	Detection Limit	Result	Reporting Limit	Detection Limit	Result	Reporting Limit	Detection Limit	Result	Reporting Limit	Detection Limit
PCBs (µg/kg)																
Method SW8082																
Aroclor 1016	0.72	31 U	31	1.9	30 U	30	1.8	32 U	32	1.9	30 U	30	1.9	32 U	32	1.9
Aroclor 1242	0.72	31 U	31	2.3	30 U	30	2.2	32 U	32	2.3	30 U	30	2.3	32 U	32	2.4
Aroclor 1248	220	31 U	31	2.3	30 U	30	2.2	32 U	32	2.3	30 U	30	2.3	32 U	32	2.4
Aroclor 1254	0.29	31 U	31	2.3	30 U	30	2.2	32 U	32	2.3	30 U	30	2.3	32 U	32	2.4
Aroclor 1260	5.4	31 U	31	2.3	30 U	30	2.2	32 U	32	2.3	30 U	30	2.3	32 U	32	2.4
Aroclor 1221	---	31 U	31	2.3	30 U	30	2.2	32 U	32	2.3	30 U	30	2.3	32 U	32	2.4
Aroclor 1232	---	31 U	31	2.3	30 U	30	2.2	32 U	32	2.3	30 U	30	2.3	32 U	32	2.4
Total PCBs	1.8	ND	NA	NA	ND	NA	NA	ND	NA	NA	ND	NA	NA	ND	NA	NA
TOTAL PETROLEUM HYDROCARBONS (mg/kg)																
NWTPH-Dx																
Diesel-Range Organics	2,000	6.0 U	6.0	1.5	**23**	5.7	1.5	5.9 U	5.9	1.5	**99** J	6.0	1.5	**17**	6.3	1.6
Motor Oil-Range Organics	2,000	12 U	12	1.9	**120**	12	1.8	12 U	12	1.8	**22**	12	1.9	**42**	12	2.0
NWTPH-G																
Gasoline-Range Organics	100/30	8.5 U	8.5	4.1	**8.3**	6.9	3.3	6.6 U	6.6	3.1	6.9 U	6.9	3.3	8.4 U	8.4	4.0
TOTAL METALS (mg/kg)																
Methods 200.8/7471A/SW7196A																
Antimony	5	0.2 U	0.2	0.015	0.2 U	0.2	0.015	0.2 U	0.2	0.015	0.2 UJ	0.2	0.015	0.2 U	0.2	0.016
Arsenic	7	**4.1**	0.2	0.098	**3.0**	0.2	0.098	**1.9**	0.2	0.10	**4.3**	0.2	0.097	**8.1**	0.2	0.11
Barium	640	**49.0**	0.6	0.063	**48.0**	0.6	0.063	**18.0**	0.6	0.064	**82.1** J	0.6	0.063	**75.5**	0.6	0.069
Beryllium	160	0.2 U	0.2	0.020	0.2 U	0.2	0.020	0.2 U	0.2	0.021	**0.3**	0.2	0.020	**0.3**	0.2	0.022
Cadmium	1.3	**0.2**	0.1	0.014	0.1 U	0.1	0.014	0.1 U	0.1	0.014	**0.1**	0.1	0.013	**0.3**	0.1	0.015
Chromium	1,480	**13.1**	0.6	0.043	**13.5**	0.6	0.043	**9.9**	0.6	0.044	**13.7**	0.6	0.043	**16.1**	0.6	0.047
Chromium VI	3.8	0.481 U	0.481	0.030	0.466 U	0.466	0.030	0.481 U	0.481	0.030	0.480 UJ	0.480	0.030	0.501 U	0.501	0.030
Copper	36	**14.1**	0.6	0.041	**21.5**	0.6	0.041	**6.3**	0.6	0.041	**24.7**	0.6	0.040	**29.4**	0.6	0.044
Lead	250	**4.1**	0.1	0.053	**3.4**	0.1	0.053	**1.1**	0.1	0.054	**5.8**	0.1	0.053	**30.7**	0.1	0.058
Mercury	1.5	**0.04**	0.03	0.0013	0.02 U	0.02	0.0012	0.03 U	0.03	0.0013	**0.04**	0.03	0.0013	**0.12**	0.03	0.0014
Nickel	210	**12.2**	0.6	0.055	**10.9**	0.6	0.055	**4.8**	0.6	0.056	**14.4**	0.6	0.055	**16.9**	0.6	0.060
Selenium	1.0	0.6 U	0.6	0.11	0.6 U	0.6	0.11	0.6 U	0.6	0.11	0.6 U	0.6	0.11	0.6 U	0.6	0.12
Silver	170	0.2 U	0.2	0.0090	0.2 U	0.2	0.0090	0.2 U	0.2	0.0092	0.2 U	0.2	0.0089	0.2 U	0.2	0.0098
Thallium	0.67	0.2 U	0.2	0.0034	0.2 U	0.2	0.0034	0.2 U	0.2	0.0034	0.2 U	0.2	0.0034	0.2 U	0.2	0.0037
Zinc	1,400	**42**	5	0.38	**33**	5	0.38	**20**	5	0.39	**44**	4	0.38	**65**	5	0.42

TABLE M-3
MONITORING WELL BORINGS SOIL ANALYTICAL RESULTS
BOEING ISAACSON-THOMPSON
REMEDIAL INVESTIGATION

	Preliminary Cleanup Level	IT-MW-5(8-9) TV16A 11/02/2011			IT-MW-5(14-15.5) TV16B 11/02/2011			IT-MW-6(2-3.5) TU90C 11/01/2011			IT-MW-6(5-6.5) TU90D 11/01/2011			IT-MW-6(8-9.5) TV16C 11/02/2011		
		Result	Reporting Limit	Detection Limit	Result	Reporting Limit	Detection Limit	Result	Reporting Limit	Detection Limit	Result	Reporting Limit	Detection Limit	Result	Reporting Limit	Detection Limit
VOLATILES (µg/kg)																
Method SW8260C																
Chloromethane	1,600	1.3 U	1.3	0.33	1.6 U	1.6	0.42	1.2 U	1.2	0.33	1.2 U	1.2	0.33	1.4 U	1.4	0.37
Bromomethane	---	1.3 U	1.3	0.24	1.6 U	1.6	0.30	1.2 UJ	1.2	0.23	1.2 UJ	1.2	0.23	1.4 U	1.4	0.26
Vinyl Chloride	7.4	1.3 U	1.3	0.30	1.6 U	1.6	0.37	1.2 U	1.2	0.29	1.2 U	1.2	0.29	1.4 U	1.4	0.33
Chloroethane	280,000	1.3 U	1.3	0.59	1.6 U	1.6	0.73	1.2 U	1.2	0.57	1.2 U	1.2	0.57	1.4 U	1.4	0.65
Methylene Chloride	2400	**2.1** J, J1	2.5	0.81	**3.7** J	3.2	1.0	**3.0**	2.5	0.79	**2.9**	2.5	0.79	**2.0** J, J1	2.8	0.89
Acetone	510,000	**33**	6.4	0.61	**26**	7.9	0.77	7.6 UJ	6.2	0.60	**7.4** UJ	6.2	0.60	25 U	7.0	0.67
Carbon Disulfide	75,000	1.3 U	1.3	0.71	1.6 U	1.6	0.89	1.2 U	1.2	0.69	1.2 U	1.2	0.70	1.4 U	1.4	0.78
1,1-Dichloroethene	81	1.3 U	1.3	0.43	1.6 U	1.6	0.53	1.2 U	1.2	0.42	1.2 U	1.2	0.42	1.4 U	1.4	0.47
1,1-Dichloroethane	710	1.3 UJ	1.3	0.26	1.6 UJ	1.6	0.32	1.2 U	1.2	0.25	1.2 U	1.2	0.25	**1.1** J, J1	1.4	0.28
trans-1,2-Dichloroethene	19,000	1.3 U	1.3	0.34	1.6 U	1.6	0.42	1.2 U	1.2	0.33	1.2 U	1.2	0.33	**3.1**	1.4	0.37
cis-1,2-Dichloroethene	2,600	1.3 U	1.3	0.30	1.6 U	1.6	0.38	1.2 U	1.2	0.30	1.2 U	1.2	0.30	**86**	1.4	0.34
Chloroform	200	1.3 U	1.3	0.30	1.6 U	1.6	0.37	1.2 U	1.2	0.29	1.2 U	1.2	0.29	1.4 U	1.4	0.33
1,2-Dichloroethane	70	1.3 U	1.3	0.24	1.6 U	1.6	0.30	1.2 U	1.2	0.24	1.2 U	1.2	0.24	1.4 U	1.4	0.27
2-Butanone	430,000	6.4 UJ	6.4	0.65	7.9 UJ	7.9	0.81	6.2 U	6.2	0.64	6.2 U	6.2	0.64	7.0 UJ	7.0	0.72
1,1,1-Trichloroethane	1,900,000	1.3 U	1.3	0.29	1.6 U	1.6	0.36	1.2 U	1.2	0.28	1.2 U	1.2	0.28	**0.7** J1	1.4	0.32
Carbon Tetrachloride	21	1.3 U	1.3	0.27	1.6 U	1.6	0.34	1.2 U	1.2	0.26	1.2 U	1.2	0.26	1.4 U	1.4	0.30
Vinyl Acetate	---	6.4 U	6.4	0.48	7.9 U	7.9	0.60	6.2 U	6.2	0.47	6.2 U	6.2	0.47	7.0 U	7.0	0.53
Bromodichloromethane	89	1.3 U	1.3	0.32	1.6 U	1.6	0.40	1.2 U	1.2	0.32	1.2 U	1.2	0.32	1.4 U	1.4	0.35
1,2-Dichloropropane	92	1.3 U	1.3	0.21	1.6 U	1.6	0.26	1.2 U	1.2	0.20	1.2 U	1.2	0.20	1.4 U	1.4	0.23
cis-1,3-Dichloropropene	---	1.3 U	1.3	0.29	1.6 U	1.6	0.36	1.2 U	1.2	0.28	1.2 U	1.2	0.28	1.4 U	1.4	0.32
Trichloroethene	51	1.3 U	1.3	0.27	1.6 U	1.6	0.34	**7.7**	1.2	0.26	**8.4**	1.2	0.26	**270**	1.4	0.30
Dibromochloromethane	---	1.3 U	1.3	0.34	1.6 U	1.6	0.42	1.2 U	1.2	0.33	1.2 U	1.2	0.33	1.4 U	1.4	0.37
1,1,2-Trichloroethane	73	1.3 U	1.3	0.36	1.6 U	1.6	0.45	1.2 U	1.2	0.35	1.2 U	1.2	0.36	1.4 U	1.4	0.40
Benzene	93	1.3 U	1.3	0.38	**0.9** J1	1.6	0.47	1.2 U	1.2	0.37	1.2 U	1.2	0.37	1.4 U	1.4	0.41
trans-1,3-Dichloropropene	---	1.3 U	1.3	0.27	1.6 U	1.6	0.34	1.2 U	1.2	0.27	1.2 U	1.2	0.27	1.4 U	1.4	0.30
2-Chloroethylvinylether	---	6.4 U	6.4	0.35	7.9 U	7.9	0.44	6.2 U	6.2	0.34	6.2 U	6.2	0.34	7.0 U	7.0	0.39
Bromoform	---	1.3 U	1.3	0.38	1.6 U	1.6	0.47	1.2 U	1.2	0.37	1.2 U	1.2	0.37	1.4 U	1.4	0.41
4-Methyl-2-Pentanone (MIBK)	170,000	6.4 U	6.4	0.53	7.9 U	7.9	0.67	6.2 U	6.2	0.52	6.2 U	6.2	0.52	7.0 U	7.0	0.59
2-Hexanone	32,000	6.4 U	6.4	0.56	7.9 U	7.9	0.70	6.2 U	6.2	0.54	6.2 U	6.2	0.55	7.0 U	7.0	0.61
Tetrachloroethene	260	1.3 U	1.3	0.33	1.6 U	1.6	0.41	1.2 U	1.2	0.32	1.2 U	1.2	0.32	**2.5**	1.4	0.36
1,1,2,2-Tetrachloroethane	13	1.3 U	1.3	0.32	1.6 U	1.6	0.40	1.2 U	1.2	0.31	1.2 U	1.2	0.31	1.4 U	1.4	0.35
Toluene	100,000	1.3 U	1.3	0.19	1.6 U	1.6	0.24	1.2 U	1.2	0.19	1.2 U	1.2	0.19	**0.9** J1	1.4	0.21
Chlorobenzene	26,000	1.3 U	1.3	0.28	1.6 U	1.6	0.35	1.2 U	1.2	0.27	1.2 U	1.2	0.27	1.4 U	1.4	0.31
Ethylbenzene	230	1.3 U	1.3	0.26	1.6 U	1.6	0.32	1.2 U	1.2	0.25	1.2 U	1.2	0.25	1.4 U	1.4	0.28
Styrene	16,000,000	1.3 U	1.3	0.18	1.6 U	1.6	0.22	1.2 U	1.2	0.17	1.2 U	1.2	0.17	1.4 U	1.4	0.19
Trichlorofluoromethane	200,000	1.3 U	1.3	0.34	1.6 U	1.6	0.42	1.2 U	1.2	0.33	1.2 U	1.2	0.33	1.4 U	1.4	0.37
1,1,2-Trichloro-1,2,2-trifuoroethane	1,000,000,000	2.5 U	2.5	0.36	3.2 U	3.2	0.46	2.5 U	2.5	0.36	2.5 U	2.5	0.36	2.8 U	2.8	0.40
m,p-Xylene	160,000	1.3 U	1.3	0.50	1.6 U	1.6	0.62	1.2 U	1.2	0.49	1.2 U	1.2	0.49	1.4 U	1.4	0.55
o-Xylene	200,000	1.3 U	1.3	0.28	1.6 U	1.6	0.36	1.2 U	1.2	0.28	1.2 U	1.2	0.28	1.4 U	1.4	0.31
1,2-Dichlorobenzene	68,000	1.3 U	1.3	0.37	1.6 U	1.6	0.47	1.2 U	1.2	0.36	1.2 U	1.2	0.36	1.4 U	1.4	0.41
1,3-Dichlorobenzene	3,840	1.3 U	1.3	0.29	1.6 U	1.6	0.36	1.2 U	1.2	0.28	1.2 U	1.2	0.28	1.4 U	1.4	0.32
1,4-Dichlorobenzene	3,500	1.3 U	1.3	0.29	1.6 U	1.6	0.37	1.2 U	1.2	0.29	1.2 U	1.2	0.29	1.4 U	1.4	0.32
Acrolein	---	64 UJ	64	4.8	79 UJ	79	6.0	62 U	62	4.7	62 U	62	4.7	70 UJ	70	5.3
Methyl Iodide	---	1.3 U	1.3	0.27	1.6 U	1.6	0.34	1.2 U	1.2	0.27	1.2 U	1.2	0.27	1.4 U	1.4	0.30
Bromoethane	---	2.5 U	2.5	0.56	3.2 U	3.2	0.70	2.5 U	2.5	0.55	2.5 U	2.5	0.55	2.8 U	2.8	0.61
Acrylonitrile	---	6.4 U	6.4	1.3	7.9 U	7.9	1.6	6.2 U	6.2	1.3	6.2 U	6.2	1.3	7.0 U	7.0	1.4
1,1-Dichloropropene	---	1.3 U	1.3	0.4	1.6 U	1.6	0.50	1.2 U	1.2	0.39	1.2 U	1.2	0.39	1.4 U	1.4	0.44
Dibromomethane	---	1.3 U	1.3	0.19	1.6 U	1.6	0.23	1.2 U	1.2	0.18	1.2 U	1.2	0.18	1.4 U	1.4	0.21
1,1,1,2-Tetrachloroethane	---	1.3 U	1.3	0.30	1.6 U	1.6	0.37	1.2 U	1.2	0.29	1.2 U	1.2	0.29	1.4 U	1.4	0.33
1,2-Dibromo-3-chloropropane	---	6.4 U	6.4	0.74	7.9 U	7.9	0.93	6.2 U	6.2	0.73	6.2 U	6.2	0.73	7.0 U	7.0	0.82
1,2,3-Trichloropropane	---	2.5 U	2.5	0.66	3.2 U	3.2	0.82	2.5 U	2.5	0.64	2.5 U	2.5	0.64	2.8 U	2.8	0.72
trans-1,4-Dichloro-2-butene	---	6.4 U	6.4	0.55	7.9 U	7.9	0.69	6.2 U	6.2	0.54	6.2 U	6.2	0.54	7.0 U	7.0	0.61
1,3,5-Trimethylbenzene	800,000	1.3 U	1.3	0.32	1.6 U	1.6	0.40	1.2 U	1.2	0.32	1.2 U	1.2	0.32	1.4 U	1.4	0.35
1,2,4-Trimethylbenzene	800,000	1.3 U	1.3	0.29	1.6 U	1.6	0.37	1.2 U	1.2	0.29	1.2 U	1.2	0.29	1.4 U	1.4	0.32
Hexachlorobutadiene	---	6.4 U	6.4	0.52	7.9 U	7.9	0.65	6.2 U	6.2	0.51	6.2 U	6.2	0.51	7.0 U	7.0	0.57

TABLE M-3
MONITORING WELL BORINGS SOIL ANALYTICAL RESULTS
BOEING ISAACSON-THOMPSON
REMEDIAL INVESTIGATION

	Preliminary Cleanup Level	IT-MW-5(8-9) TV16A 11/02/2011			IT-MW-5(14-15.5) TV16B 11/02/2011			IT-MW-6(2-3.5) TU90C 11/01/2011			IT-MW-6(5-6.5) TU90D 11/01/2011			IT-MW-6(8-9.5) TV16C 11/02/2011		
		Result	Reporting Limit	Detection Limit	Result	Reporting Limit	Detection Limit	Result	Reporting Limit	Detection Limit	Result	Reporting Limit	Detection Limit	Result	Reporting Limit	Detection Limit
Ethylene Dibromide	---	1.3 U	1.3	0.22	1.6 U	1.6	0.28	1.2 U	1.2	0.22	1.2 U	1.2	0.22	1.4 U	1.4	0.25
Bromochloromethane	---	1.3 U	1.3	0.41	1.6 U	1.6	0.51	1.2 U	1.2	0.40	1.2 U	1.2	0.40	1.4 U	1.4	0.45
2,2-Dichloropropane	---	1.3 U	1.3	0.37	1.6 U	1.6	0.46	1.2 U	1.2	0.36	1.2 U	1.2	0.36	1.4 U	1.4	0.41
1,3-Dichloropropane	---	1.3 U	1.3	0.27	1.6 U	1.6	0.33	1.2 U	1.2	0.26	1.2 U	1.2	0.26	1.4 U	1.4	0.29
Isopropylbenzene	78,000	1.3 U	1.3	0.30	1.6 U	1.6	0.37	1.2 U	1.2	0.29	1.2 U	1.2	0.29	1.4 U	1.4	0.33
n-Propylbenzene	11,000	1.3 U	1.3	0.35	1.6 U	1.6	0.43	1.2 U	1.2	0.34	1.2 U	1.2	0.34	1.4 U	1.4	0.38
Bromobenzene	---	1.3 U	1.3	0.19	1.6 U	1.6	0.24	1.2 U	1.2	0.19	1.2 U	1.2	0.19	1.4 U	1.4	0.21
2-Chlorotoluene	---	1.3 U	1.3	0.38	1.6 U	1.6	0.48	1.2 U	1.2	0.37	1.2 U	1.2	0.37	1.4 U	1.4	0.42
4-Chlorotoluene	400,000	1.3 U	1.3	0.35	1.6 U	1.6	0.44	1.2 U	1.2	0.34	1.2 U	1.2	0.34	1.4 U	1.4	0.39
tert-Butylbenzene	---	1.3 U	1.3	0.39	1.6 U	1.6	0.49	1.2 U	1.2	0.38	1.2 U	1.2	0.38	1.4 U	1.4	0.43
sec-Butylbenzene	---	1.3 U	1.3	0.30	1.6 U	1.6	0.38	1.2 U	1.2	0.30	1.2 U	1.2	0.30	1.4 U	1.4	0.34
4-Isopropyltoluene	---	1.3 U	1.3	0.30	1.6 U	1.6	0.37	1.2 U	1.2	0.29	1.2 U	1.2	0.29	1.4 U	1.4	0.33
n-Butylbenzene	27,000	1.3 U	1.3	0.33	1.6 U	1.6	0.42	1.2 U	1.2	0.33	1.2 U	1.2	0.33	1.4 U	1.4	0.37
1,2,4-Trichlorobenzene	80	6.4 U	6.4	0.42	7.9 U	7.9	0.53	6.2 U	6.2	0.41	6.2 U	6.2	0.41	7.0 U	7.0	0.46
Naphthalene	2,100	6.4 U	6.4	0.54	7.9 U	7.9	0.68	6.2 U	6.2	0.53	6.2 U	6.2	0.53	7.0 U	7.0	0.60
1,2,3-Trichlorobenzene	---	6.4 U	6.4	0.39	7.9 U	7.9	0.48	6.2 U	6.2	0.38	6.2 U	6.2	0.38	7.0 U	7.0	0.43
SEMIVOLATILES (µg/kg)																
Method SW8270D																
Phenol	1,900,000	18 U	18	7.9	19 U	19	8.1	18 U	18	7.9	19 U	19	8.1	18 U	18	8.0
Bis-(2-Chloroethyl) Ether	---	18 U	18	3.1	19 U	19	3.2	18 U	18	3.0	19 U	19	3.1	18 U	18	3.1
2-Chlorophenol	---	18 U	18	2.2	19 U	19	2.3	18 U	18	2.2	19 U	19	2.2	18 U	18	2.2
1,3-Dichlorobenzene	3,840	18 U	18	2.4	19 U	19	2.5	18 U	18	2.4	19 U	19	2.5	18 U	18	2.4
1,4-Dichlorobenzene	3,500	18 U	18	2.6	19 U	19	2.7	18 U	18	2.6	19 U	19	2.7	18 U	18	2.6
Benzyl Alcohol	8,000,000	18 U	18	5.6	19 U	19	5.7	18 U	18	5.5	19 U	19	5.7	18 U	18	5.6
1,2-Dichlorobenzene	68,000	18 U	18	2.3	19 U	19	2.4	18 U	18	2.3	19 U	19	2.3	18 U	18	2.3
2-Methylphenol	250,000	18 U	18	4.8	19 U	19	4.9	18 U	18	4.8	19 U	19	4.9	18 U	18	4.9
2,2'-Oxybis(1-Chloropropane)	---	18 U	18	3.4	19 U	19	3.5	18 U	18	3.4	19 U	19	3.5	18 U	18	3.5
4-Methylphenol	41,000	37 U	37	6.1	38 U	38	6.2	36 U	36	6.0	37 U	37	6.2	37 U	37	6.1
N-Nitroso-Di-N-Propylamine	---	18 U	18	3.1	19 U	19	3.2	18 U	18	3.1	19 U	19	3.1	18 U	18	3.1
Hexachloroethane	---	18 U	18	2.7	19 U	19	2.8	18 U	18	2.7	19 U	19	2.7	18 U	18	2.7
Nitrobenzene	---	18 U	18	3.7	19 U	19	3.8	18 U	18	3.7	19 U	19	3.8	18 U	18	3.8
Isophorone	---	18 U	18	2.6	19 U	19	2.7	18 U	18	2.6	19 U	19	2.7	18 U	18	2.6
2-Nitrophenol	---	92 U	92	35	94 U	94	36	91 U	91	35	93 U	93	36	92 U	92	36
2,4-Dimethylphenol	95,000	37 UJ	37	3.2	38 UJ	38	3.3	36 UJ	36	3.1	37 UJ	37	3.2	37 UJ	37	3.2
Benzoic Acid	9,000	370 U	370	93	380 U	380	95	360 UJ	360	92	370 UJ	370	94	370 U	370	93
bis(2-Chloroethoxy) Methane	---	18 U	18	1.8	19 U	19	1.9	18 U	18	1.8	19 U	19	1.9	18 U	18	1.8
2,4-Dichlorophenol	---	180 U	180	20	190 U	190	20	180 U	180	20	190 U	190	20	180 U	180	20
1,2,4-Trichlorobenzene	80	18 U	18	3.2	19 U	19	3.3	18 U	18	3.2	19 U	19	3.2	18 U	18	3.2
Naphthalene	2,100	18 U	18	2.5	19 U	19	2.6	18 U	18	2.5	19 U	19	2.6	**85**	18	2.6
4-Chloroaniline	---	250 U	250	20	250 U	250	21	240 U	240	20	250 U	250	21	250 U	250	21
Hexachlorobutadiene	---	92 U	92	4.2	94 U	94	4.3	91 U	91	4.2	93 U	93	4.3	92 U	92	4.2
4-Chloro-3-methylphenol	740,000	92 U	92	14	94 U	94	14	91 U	91	14	93 U	93	14	92 U	92	14
2-Methylnaphthalene	320,000	18 U	18	2.8	19 U	19	2.9	18 U	18	2.8	19 U	19	2.9	**18** J1	18	2.8
Hexachlorocyclopentadiene	---	370 UJ	370	61	380 UJ	380	63	360 UJ	360	60	370 UJ	370	62	370 UJ	370	61
2,4,6-Trichlorophenol	---	92 U	92	21	94 U	94	21	91 U	91	20	93 U	93	21	92 U	92	21
2,4,5-Trichlorophenol	---	92 U	92	20	94 U	94	20	91 U	91	19	93 U	93	20	92 U	92	20
2-Chloronaphthalene	---	18 U	18	2.4	19 U	19	2.5	18 U	18	2.4	19 U	19	2.5	18 U	18	2.4
2-Nitroaniline	---	92 U	92	17	94 U	94	17	91 U	91	17	93 U	93	17	92 U	92	17
Dimethylphthalate	71	18 U	18	2.7	19 U	19	2.7	18 U	18	2.6	19 U	19	2.7	18 U	18	2.7
Acenaphthylene	---	18 U	18	5.2	19 U	19	5.4	18 U	18	5.2	19 U	19	5.3	18 U	18	5.3
3-Nitroaniline	---	92 U	92	21	94 U	94	21	91 U	91	20	93 U	93	21	92 U	92	21
Acenaphthene	230,000	18 U	18	3.0	19 U	19	3.1	18 U	18	3.0	19 U	19	3.1	18 U	18	3.0
2,4-Dinitrophenol	---	780 U	780	100	800 U	800	100	770 U	770	100	790 U	790	100	790 U	790	100
4-Nitrophenol	---	92 UJ	92	32	94 UJ	94	33	91 UJ	91	32	93 UJ	93	32	92 UJ	92	32
Dibenzofuran	80,000	18 U	18	3.8	19 U	19	3.9	18 U	18	3.7	19 U	19	3.8	**13** J1	18	3.8
2,6-Dinitrotoluene	---	92 U	92	28	94 U	94	29	91 U	91	28	93 U	93	29	92 U	92	28

TABLE M-3
MONITORING WELL BORINGS SOIL ANALYTICAL RESULTS
BOEING ISAACSON-THOMPSON
REMEDIAL INVESTIGATION

	Preliminary Cleanup Level	IT-MW-5(8-9) TV16A 11/02/2011			IT-MW-5(14-15.5) TV16B 11/02/2011			IT-MW-6(2-3.5) TU90C 11/01/2011			IT-MW-6(5-6.5) TU90D 11/01/2011			IT-MW-6(8-9.5) TV16C 11/02/2011		
		Result	Reporting Limit	Detection Limit	Result	Reporting Limit	Detection Limit	Result	Reporting Limit	Detection Limit	Result	Reporting Limit	Detection Limit	Result	Reporting Limit	Detection Limit
2,4-Dinitrotoluene	---	92 U	92	18	94 U	94	18	91 U	91	18	93 U	93	18	92 U	92	18
Diethylphthalate	178,000	46 U	46	34	47 U	47	34	45 U	45	33	47 U	47	34	46 U	46	34
4-Chlorophenyl-phenylether	---	18 U	18	4.8	19 U	19	5.0	18 U	18	4.8	19 U	19	4.9	18 U	18	4.9
Fluorene	150,000	18 U	18	4.0	19 U	19	4.1	18 U	18	4.0	19 U	19	4.1	18 U	18	4.0
4-Nitroaniline	---	92 U	92	35	94 U	94	36	91 U	91	34	93 U	93	35	92 U	92	35
4,6-Dinitro-2-Methylphenol	---	180 U	180	19	190 U	190	20	180 U	180	19	190 U	190	20	180 U	180	20
N-Nitrosodiphenylamine	204,000	18 U	18	4.9	19 U	19	5.1	18 U	18	4.9	19 U	19	5.0	18 U	18	5.0
4-Bromophenyl-phenylether	---	18 U	18	4.6	19 U	19	4.7	18 U	18	4.6	19 U	19	4.7	18 U	18	4.6
Hexachlorobenzene	---	18 U	18	3.9	19 U	19	4.0	18 U	18	3.9	19 U	19	4.0	18 U	18	4.0
Pentachlorophenol	---	180 UJ	180	44	190 UJ	190	46	180 UJ	180	44	190 UJ	190	45	180 UJ	180	45
Phenanthrene	---	**75**	18	3.3	19 U	19	3.4	18 U	18	3.3	19 U	19	3.4	**66**	18	3.4
Carbazole	50,000	18 U	18	2.5	19 U	19	2.5	18 U	18	2.4	19 U	19	2.5	18 U	18	2.5
Anthracene	1,600,000	**11** J1	18	4.1	19 U	19	4.2	18 U	18	4.1	19 U	19	4.2	18 U	18	4.2
Di-n-Butylphthalate	26,000	18 U	18	7.5	19 U	19	7.7	18 U	18	7.4	19 U	19	7.6	18 U	18	7.5
Fluoranthene	230,000	**110**	18	2.7	19 U	19	2.7	18 U	18	2.6	19 U	19	2.7	**59**	18	2.7
Pyrene	240,000	**120**	18	1.8	19 U	19	1.8	18 U	18	1.8	19 U	19	1.8	**49**	18	1.8
Butylbenzylphthalate	1,700	**47**	18	5.6	19 U	19	5.8	18 U	18	5.6	19 U	19	5.7	**19**	18	5.7
3,3'-Dichlorobenzidine	---	140 UJ	140	16	140 UJ	140	17	140 UJ	140	16	140 UJ	140	17	140 UJ	140	16
Benzo(a)anthracene	---	**48**	18	3.0	19 U	19	3.1	18 U	18	3.0	19 U	19	3.1	18 U	18	3.0
bis(2-Ethylhexyl)phthalate	56,600	**91**	23	13	**24**	24	14	23 U	23	13	23 U	23	14	**24**	23	13
Chrysene	---	**59**	18	3.4	19 U	19	3.5	18 U	18	3.4	19 U	19	3.5	**23**	18	3.5
Di-n-Octyl phthalate	---	18 U	18	5.4	19 U	19	5.5	18 U	18	5.3	19 U	19	5.4	18 U	18	5.4
Benzo(a)pyrene	---	**47**	18	5.0	19 U	19	5.1	18 U	18	5.0	19 U	19	5.1	**12** J1	18	5.0
Indeno(1,2,3-cd)pyrene	---	**25**	18	4.3	19 U	19	4.4	18 U	18	4.3	19 U	19	4.4	**13** J1	18	4.3
Dibenz(a,h)anthracene	---	18 U	18	4.0	19 U	19	4.1	18 U	18	3.9	19 U	19	4.0	18 U	18	4.0
Benzo(g,h,i)perylene	---	**31**	18	4.0	19 U	19	4.1	18 U	18	4.0	19 U	19	4.1	**23**	18	4.1
1-Methylnaphthalene	16,000	18 U	18	2.5	19 U	19	2.5	18 U	18	2.4	19 U	19	2.5	**9.2** J1	18	2.5
Total Benzofluoranthenes	---	**72**	18	2.5	19 U	19	2.6	18 U	18	2.5	19 U	19	2.6	**30**	18	2.5
cPAH TEQ	15	**62**	NA	NA	ND	NA	NA	ND	NA	NA	ND	NA	NA	**17** J	NA	NA
PAHs (µg/kg)																
Method SW8270D-SIM																
Naphthalene	2,100	**4.0** J1	4.6	2.4	4.7 U	4.7	2.5	4.6 U	4.6	2.4	**20**	4.4	2.3	**49**	4.8	2.5
2-Methylnaphthalene	320,000	**4.5** J1	4.6	1.4	4.7 U	4.7	1.4	4.6 U	4.6	1.4	**9.4**	4.4	1.3	**12**	4.8	1.5
1-Methylnaphthalene	16,000	**2.9** J1	4.6	1.6	4.7 U	4.7	1.6	4.6 U	4.6	1.6	**11**	4.4	1.5	**9.9**	4.8	1.6
Total Naphthalenes	---	**11.4** J1	NA	NA	4.7 U	NA	NA	4.6 U	NA	NA	**40.4**	NA	NA	**70.9**	NA	NA
Acenaphthylene	---	4.6 U	4.6	1.2	4.7 U	4.7	1.2	4.6 U	4.6	1.1	**6.3**	4.4	1.1	**7.0**	4.8	1.2
Acenaphthene	230,000	**3.2** J1	4.6	1.2	4.7 U	4.7	1.2	4.6 U	4.6	1.2	**11**	4.4	1.2	**2.4** J1	4.8	1.3
Fluorene	150,000	**2.3** J1	4.6	1.2	4.7 U	4.7	1.2	4.6 U	4.6	1.2	**13**	4.4	1.1	4.8 U	4.8	1.2
Phenanthrene	---	**17**	4.6	1.8	**3.8** J1	4.7	1.9	**2.5** J1	4.6	1.8	**180**	4.4	1.8	**53**	4.8	1.9
Anthracene	1,600,000	**3.2** J1	4.6	1.3	4.7 U	4.7	1.4	4.6 U	4.6	1.3	**27**	4.4	1.3	4.8 U	4.8	1.4
Fluoranthene	230,000	**19**	4.6	1.6	4.7 U	4.7	1.7	**2.4** J1	4.6	1.6	**240**	4.4	1.6	**49**	4.8	1.7
Pyrene	240,000	**19**	4.6	2.0	4.7 U	4.7	2.1	4.6 U	4.6	2.0	**220**	4.4	2.0	**38**	4.8	2.1
Benzo(a)anthracene	---	**9.1**	4.6	1.5	4.7 U	4.7	1.5	4.6 U	4.6	1.5	**92**	4.4	1.4	**7.2**	4.8	1.5
Chrysene	---	**18**	4.6	1.7	4.7 U	4.7	1.8	4.6 U	4.6	1.7	**96**	4.4	1.7	**18**	4.8	1.8
Benzo(a)pyrene	---	**13**	4.6	1.6	4.7 U	4.7	1.6	4.6 U	4.6	1.6	**99**	4.4	1.6	**10**	4.8	1.7
Indeno(1,2,3-cd)pyrene	---	**7.0**	4.6	3.2	4.7 U	4.7	3.2	4.6 U	4.6	3.2	**52**	4.4	3.1	**8.3**	4.8	3.3
Dibenz(a,h)anthracene	---	**4.2** J1	4.6	2.2	4.7 U	4.7	2.2	4.6 U	4.6	2.2	**17**	4.4	2.1	**3.2** J1	4.8	2.3
Benzo(g,h,i)perylene	---	**9.4**	4.6	2.8	4.7 U	4.7	2.9	4.6 U	4.6	2.8	**56**	4.4	2.7	**14**	4.8	2.9
Dibenzofuran	80,000	4.6 U	4.6	1.4	4.7 U	4.7	1.4	4.6 U	4.6	1.4	**9.1**	4.4	1.3	**9.4**	4.8	1.5
Total Benzofluoranthenes	---	**23**	4.6	1.7	4.7 U	4.7	1.7	4.6 U	4.6	1.7	**140**	4.4	1.6	**26**	4.8	1.8
cPAH TEQ	15	**18** J	NA	NA	ND	NA	NA	ND	NA	NA	**130**	NA	NA	**15** J	NA	NA

TABLE M-3
MONITORING WELL BORINGS SOIL ANALYTICAL RESULTS
BOEING ISAACSON-THOMPSON
REMEDIAL INVESTIGATION

	Preliminary Cleanup Level	IT-MW-5(8-9) TV16A 11/02/2011			IT-MW-5(14-15.5) TV16B 11/02/2011			IT-MW-6(2-3.5) TU90C 11/01/2011			IT-MW-6(5-6.5) TU90D 11/01/2011			IT-MW-6(8-9.5) TV16C 11/02/2011		
		Result	Reporting Limit	Detection Limit	Result	Reporting Limit	Detection Limit	Result	Reporting Limit	Detection Limit	Result	Reporting Limit	Detection Limit	Result	Reporting Limit	Detection Limit
PCBs (µg/kg)																
Method SW8082																
Aroclor 1016	0.72	32 U	32	2.0	33 U	33	2.0	32 U	32	1.9	30 U	30	1.9	32 U	32	1.9
Aroclor 1242	0.72	32 U	32	2.4	33 U	33	2.5	32 U	32	2.3	30 U	30	2.3	32 U	32	2.4
Aroclor 1248	220	32 U	32	2.4	33 U	33	2.5	32 U	32	2.3	30 U	30	2.3	32 U	32	2.4
Aroclor 1254	0.29	**49**	32	2.4	33 U	33	2.5	32 U	32	2.3	30 U	30	2.3	**16** J1	32	2.4
Aroclor 1260	5.4	32 U	32	2.4	33 U	33	2.5	32 U	32	2.3	30 U	30	2.3	32 U	32	2.4
Aroclor 1221	---	32 U	32	2.4	33 U	33	2.5	32 U	32	2.3	30 U	30	2.3	32 U	32	2.4
Aroclor 1232	---	32 U	32	2.4	33 U	33	2.5	32 U	32	2.3	30 U	30	2.3	32 U	32	2.4
Total PCBs	1.8	**49**	NA	NA	ND	NA	NA	ND	NA	NA	ND	NA	NA	**16** J	NA	NA
TOTAL PETROLEUM HYDROCARBONS (mg/kg)																
NWTPH-Dx																
Diesel-Range Organics	2,000	**18**	6.5	1.7	6.6 U	6.6	1.7	5.0 U	5.0	1.2	5.2 U	5.2	1.3	**14**	14	1.7
Motor Oil-Range Organics	2,000	**77**	13	2.0	13 U	13	2.1	10 U	10	1.5	10 U	10	1.6	**56**	56	2.1
NWTPH-G																
Gasoline-Range Organics	100/30	8.6 U	8.6	4.1	8.5 U	8.5	4.1	6.6 U	6.6	3.1	6.4 U	6.4	3.0	8.3 U	8.3	4.0
TOTAL METALS (mg/kg)																
Methods 200.8/7471A/SW7196A																
Antimony	5	0.2 UJ	0.2	0.016	0.3 U	0.3	0.016	0.2 U	0.2	0.013	0.2 U	0.2	0.013	0.2 U	0.2	0.016
Arsenic	7	**4.6**	0.2	0.11	**2.1**	0.3	0.11	**2.2**	0.2	0.085	**2.3**	0.2	0.088	**7.0**	0.2	0.10
Barium	640	**60.8**	0.6	0.069	**57.2**	0.6	0.071	**37.8**	0.5	0.055	**36.0**	0.5	0.056	**76.3**	0.6	0.067
Beryllium	160	**0.3**	0.2	0.022	0.3 U	0.3	0.023	0.2 U	0.2	0.018	**0.2**	0.2	0.018	**0.4**	0.2	0.022
Cadmium	1.3	**0.1**	0.1	0.015	0.1 U	0.1	0.015	0.1 U	0.1	0.012	0.1 U	0.1	0.012	**0.2**	0.1	0.014
Chromium	1,480	**17.2**	0.6	0.047	**14.1**	0.6	0.048	**18.6**	0.5	0.037	**22.9**	0.5	0.038	**22.5**	0.6	0.045
Chromium VI	3.8	0.493 U	0.493	0.030	0.539 U	0.539	0.030	0.408 U	0.408	0.030	0.403 U	0.403	0.030	0.514 U	0.514	0.030
Copper	36	**26.4**	0.6	0.044	**21.5**	0.6	0.046	**11.0**	0.5	0.035	**11.6**	0.5	0.036	**34.0**	0.6	0.043
Lead	250	**28.6** J	0.1	0.058	**2.8**	0.1	0.059	**1.6**	0.1	0.046	**1.6**	0.1	0.047	**30.4**	0.1	0.056
Mercury	1.5	**0.03**	0.03	0.0013	**0.03**	0.03	0.0013	0.02 U	0.02	0.0012	0.02 U	0.02	0.0010	**0.04**	0.02	0.0013
Nickel	210	**40.8** J	0.6	0.060	**10.8**	0.6	0.062	**28.9**	0.5	0.048	**29.2**	0.5	0.049	**23.1**	0.6	0.059
Selenium	1.0	0.6 U	0.6	0.12	0.6 U	0.6	0.13	0.5 U	0.5	0.097	0.5 U	0.5	0.10	0.6 U	0.6	0.12
Silver	170	0.2 U	0.2	0.0098	0.3 U	0.3	0.010	0.2 U	0.2	0.0079	0.2 U	0.2	0.0081	0.2 U	0.2	0.0096
Thallium	0.67	0.2 U	0.2	0.0037	0.3 U	0.3	0.0038	0.2 U	0.2	0.0029	0.2 U	0.2	0.0030	0.2 U	0.2	0.0036
Zinc	1,400	**60**	5	0.42	**31**	5	0.43	**27**	4	0.33	**27**	4	0.34	**72**	5	0.41

TABLE M-3
MONITORING WELL BORINGS SOIL ANALYTICAL RESULTS
BOEING ISAACSON-THOMPSON
REMEDIAL INVESTIGATION

	Preliminary Cleanup Level	IT-MW-6(14-15.5) TV16D 11/02/2011			IT-MW-6(20-21.5) TV16E 11/02/2011			IT-MW-6(23-24.5) TV16F 11/02/2011			IT-MW-7(2-3.5) TU65A 10/31/2011			IT-MW-7(5-6.5) TU65B 10/31/2011		
		Result	Reporting Limit	Detection Limit	Result	Reporting Limit	Detection Limit	Result	Reporting Limit	Detection Limit	Result	Reporting Limit	Detection Limit	Result	Reporting Limit	Detection Limit
VOLATILES (µg/kg)																
Method SW8260C																
Chloromethane	1,600	1.2 U	1.2	0.33	1.1 U	1.1	0.30	1.2 U	1.2	0.31	1.3 U	1.3	0.33	1.4 U	1.4	0.36
Bromomethane	---	1.2 U	1.2	0.23	1.1 U	1.1	0.21	1.2 U	1.2	0.22	1.3 U	1.3	0.24	1.4 U	1.4	0.25
Vinyl Chloride	7.4	**2.2**	1.2	0.29	**7.2**	1.1	0.27	**1.0** J1	1.2	0.28	1.3 U	1.3	0.30	1.4 U	1.4	0.32
Chloroethane	280,000	1.2 U	1.2	0.58	1.1 U	1.1	0.53	1.2 U	1.2	0.55	1.3 U	1.3	0.59	1.4 U	1.4	0.62
Methylene Chloride	2400	**2.8** J	2.5	0.79	**3.1** J	2.3	0.72	**3.2** J	2.4	0.76	**2.8** J	2.5	0.81	**3.1** J	2.7	0.86
Acetone	510,000	9.3 U	6.2	0.60	20 U	5.7	0.55	21 U	6.0	0.58	34 U	6.4	0.61	**58**	6.8	0.65
Carbon Disulfide	75,000	1.2 U	1.2	0.70	**14**	1.1	0.64	**3.4**	1.2	0.67	1.3 U	1.3	0.71	1.4 U	1.4	0.76
1,1-Dichloroethene	81	1.2 U	1.2	0.42	1.1 U	1.1	0.38	1.2 U	1.2	0.40	1.3 U	1.3	0.43	1.4 U	1.4	0.45
1,1-Dichloroethane	710	1.2 UJ	1.2	0.25	1.1 UJ	1.1	0.23	1.2 UJ	1.2	0.24	1.3 U	1.3	0.26	1.4 U	1.4	0.27
trans-1,2-Dichloroethene	19,000	1.2 U	1.2	0.33	1.1 U	1.1	0.30	1.2 U	1.2	0.32	1.3 U	1.3	0.34	1.4 U	1.4	0.36
cis-1,2-Dichloroethene	2,600	**51**	1.2	0.30	**16**	1.1	0.27	**1.6**	1.2	0.29	1.3 U	1.3	0.31	1.4 U	1.4	0.32
Chloroform	200	1.2 U	1.2	0.29	1.1 U	1.1	0.27	1.2 U	1.2	0.28	1.3 U	1.3	0.30	1.4 U	1.4	0.32
1,2-Dichloroethane	70	1.2 U	1.2	0.24	1.1 U	1.1	0.22	1.2 U	1.2	0.23	1.3 U	1.3	0.24	1.4 U	1.4	0.26
2-Butanone	430,000	6.2 UJ	6.2	0.64	5.7 UJ	5.7	0.59	6.0 UJ	6.0	0.61	6.4 U	6.4	0.65	6.8 U	6.8	0.69
1,1,1-Trichloroethane	1,900,000	1.2 U	1.2	0.28	1.1 U	1.1	0.26	1.2 U	1.2	0.27	1.3 U	1.3	0.29	1.4 U	1.4	0.31
Carbon Tetrachloride	21	1.2 U	1.2	0.27	1.1 U	1.1	0.24	1.2 U	1.2	0.25	1.3 U	1.3	0.27	1.4 U	1.4	0.29
Vinyl Acetate	---	6.2 U	6.2	0.48	5.7 U	5.7	0.43	6.0 U	6.0	0.45	6.4 U	6.4	0.48	6.8 U	6.8	0.51
Bromodichloromethane	89	1.2 U	1.2	0.32	1.1 U	1.1	0.29	1.2 U	1.2	0.30	1.3 U	1.3	0.32	1.4 U	1.4	0.34
1,2-Dichloropropane	92	1.2 U	1.2	0.20	1.1 U	1.1	0.18	1.2 U	1.2	0.19	1.3 U	1.3	0.21	1.4 U	1.4	0.22
cis-1,3-Dichloropropene	---	1.2 U	1.2	0.28	1.1 U	1.1	0.26	1.2 U	1.2	0.27	1.3 U	1.3	0.29	1.4 U	1.4	0.31
Trichloroethene	51	**220**	1.2	0.26	**4.3**	1.1	0.24	**2.2**	1.2	0.25	**46**	1.3	0.27	**22**	1.4	0.29
Dibromochloromethane	---	1.2 U	1.2	0.33	1.1 U	1.1	0.30	1.2 U	1.2	0.32	1.3 U	1.3	0.34	1.4 U	1.4	0.36
1,1,2-Trichloroethane	73	1.2 U	1.2	0.36	1.1 U	1.1	0.33	1.2 U	1.2	0.34	1.3 U	1.3	0.36	1.4 U	1.4	0.39
Benzene	93	1.2 U	1.2	0.37	1.1 U	1.1	0.34	1.2 U	1.2	0.35	**0.8** J1	1.3	0.38	**1.9**	1.4	0.40
trans-1,3-Dichloropropene	---	1.2 U	1.2	0.27	1.1 U	1.1	0.25	1.2 U	1.2	0.26	1.3 U	1.3	0.27	1.4 U	1.4	0.29
2-Chloroethylvinylether	---	6.2 U	6.2	0.34	5.7 U	5.7	0.32	6.0 U	6.0	0.33	6.4 U	6.4	0.35	6.8 U	6.8	0.37
Bromoform	---	1.2 U	1.2	0.37	1.1 U	1.1	0.34	1.2 U	1.2	0.35	1.3 U	1.3	0.38	1.4 U	1.4	0.40
4-Methyl-2-Pentanone (MIBK)	170,000	6.2 U	6.2	0.52	5.7 U	5.7	0.48	6.0 U	6.0	0.50	6.4 U	6.4	0.53	6.8 U	6.8	0.57
2-Hexanone	32,000	6.2 U	6.2	0.55	5.7 U	5.7	0.50	6.0 U	6.0	0.52	6.4 U	6.4	0.56	6.8 U	6.8	0.59
Tetrachloroethene	260	**2.6**	1.2	0.32	1.1 U	1.1	0.29	1.2 U	1.2	0.31	**2.7**	1.3	0.33	**4.6**	1.4	0.35
1,1,2,2-Tetrachloroethane	13	1.2 U	1.2	0.32	1.1 U	1.1	0.29	1.2 U	1.2	0.30	1.3 U	1.3	0.32	1.4 U	1.4	0.34
Toluene	100,000	1.2 U	1.2	0.19	**0.7** J1	1.1	0.17	1.2 U	1.2	0.18	**1.5**	1.3	0.19	**1.0** J1	1.4	0.20
Chlorobenzene	26,000	1.2 U	1.2	0.27	1.1 U	1.1	0.25	1.2 U	1.2	0.26	1.3 U	1.3	0.28	1.4 U	1.4	0.30
Ethylbenzene	230	1.2 U	1.2	0.25	1.1 U	1.1	0.23	1.2 U	1.2	0.24	1.3 U	1.3	0.26	1.4 U	1.4	0.27
Styrene	16,000,000	1.2 U	1.2	0.17	1.1 U	1.1	0.16	1.2 U	1.2	0.16	1.3 U	1.3	0.18	1.4 U	1.4	0.19
Trichlorofluoromethane	200,000	1.2 U	1.2	0.33	1.1 U	1.1	0.30	1.2 U	1.2	0.32	1.3 U	1.3	0.34	1.4 U	1.4	0.36
1,1,2-Trichloro-1,2,2-trifuoroethane	1,000,000,000	2.5 U	2.5	0.36	2.3 U	2.3	0.33	2.4 U	2.4	0.34	2.5 U	2.5	0.37	2.7 U	2.7	0.39
m,p-Xylene	160,000	1.2 U	1.2	0.49	**0.9** J1	1.1	0.45	1.2 U	1.2	0.47	1.3 U	1.3	0.50	1.4 U	1.4	0.53
o-Xylene	200,000	1.2 U	1.2	0.28	1.1 U	1.1	0.26	1.2 U	1.2	0.27	1.3 U	1.3	0.28	1.4 U	1.4	0.30
1,2-Dichlorobenzene	68,000	1.2 U	1.2	0.37	1.1 U	1.1	0.33	1.2 U	1.2	0.35	1.3 U	1.3	0.37	1.4 U	1.4	0.40
1,3-Dichlorobenzene	3,840	1.2 U	1.2	0.28	1.1 U	1.1	0.26	1.2 U	1.2	0.27	1.3 U	1.3	0.29	1.4 U	1.4	0.31
1,4-Dichlorobenzene	3,500	1.2 U	1.2	0.29	1.1 U	1.1	0.26	1.2 U	1.2	0.28	1.3 U	1.3	0.30	1.4 U	1.4	0.31
Acrolein	---	62 UJ	62	4.8	57 UJ	57	4.3	60 UJ	60	4.5	64 U	64	4.8	68 U	68	5.1
Methyl Iodide	---	1.2 U	1.2	0.27	1.1 U	1.1	0.25	1.2 U	1.2	0.26	1.3 U	1.3	0.27	1.4 U	1.4	0.29
Bromoethane	---	2.5 U	2.5	0.55	2.3 U	2.3	0.50	2.4 U	2.4	0.53	2.5 U	2.5	0.56	2.7 U	2.7	0.59
Acrylonitrile	---	6.2 U	6.2	1.3	5.7 U	5.7	1.2	6.0 U	6.0	1.2	6.4 U	6.4	1.3	6.8 U	6.8	1.4
1,1-Dichloropropene	---	1.2 U	1.2	0.39	1.1 U	1.1	0.36	1.2 U	1.2	0.37	1.3 U	1.3	0.40	1.4 U	1.4	0.42
Dibromomethane	---	1.2 U	1.2	0.18	1.1 U	1.1	0.17	1.2 U	1.2	0.18	1.3 U	1.3	0.19	1.4 U	1.4	0.20
1,1,1,2-Tetrachloroethane	---	1.2 U	1.2	0.29	1.1 U	1.1	0.27	1.2 U	1.2	0.28	1.3 U	1.3	0.30	1.4 U	1.4	0.31
1,2-Dibromo-3-chloropropane	---	6.2 U	6.2	0.73	5.7 U	5.7	0.67	6.0 U	6.0	0.70	6.4 U	6.4	0.75	6.8 U	6.8	0.79
1,2,3-Trichloropropane	---	2.5 U	2.5	0.65	2.3 U	2.3	0.59	2.4 U	2.4	0.62	2.5 U	2.5	0.66	2.7 U	2.7	0.70
trans-1,4-Dichloro-2-butene	---	6.2 U	6.2	0.55	5.7 U	5.7	0.50	6.0 U	6.0	0.52	6.4 U	6.4	0.56	6.8 U	6.8	0.59
1,3,5-Trimethylbenzene	800,000	1.2 U	1.2	0.32	1.1 U	1.1	0.29	1.2 U	1.2	0.30	1.3 U	1.3	0.32	1.4 U	1.4	0.34
1,2,4-Trimethylbenzene	800,000	1.2 U	1.2	0.29	1.1 U	1.1	0.26	1.2 U	1.2	0.27	1.3 U	1.3	0.29	1.4 U	1.4	0.31
Hexachlorobutadiene	---	6.2 U	6.2	0.51	5.7 U	5.7	0.47	6.0 U	6.0	0.49	6.4 U	6.4	0.52	6.8 U	6.8	0.55

TABLE M-3
MONITORING WELL BORINGS SOIL ANALYTICAL RESULTS
BOEING ISAACSON-THOMPSON
REMEDIAL INVESTIGATION

	Preliminary Cleanup Level	IT-MW-6(14-15.5) TV16D 11/02/2011			IT-MW-6(20-21.5) TV16E 11/02/2011			IT-MW-6(23-24.5) TV16F 11/02/2011			IT-MW-7(2-3.5) TU65A 10/31/2011			IT-MW-7(5-6.5) TU65B 10/31/2011		
		Result	Reporting Limit	Detection Limit	Result	Reporting Limit	Detection Limit	Result	Reporting Limit	Detection Limit	Result	Reporting Limit	Detection Limit	Result	Reporting Limit	Detection Limit
Ethylene Dibromide	---	1.2 U	1.2	0.22	1.1 U	1.1	0.20	1.2 U	1.2	0.21	1.3 U	1.3	0.22	1.4 U	1.4	0.24
Bromochloromethane	---	1.2 U	1.2	0.40	1.1 U	1.1	0.37	1.2 U	1.2	0.39	1.3 U	1.3	0.41	1.4 U	1.4	0.44
2,2-Dichloropropane	---	1.2 U	1.2	0.36	1.1 U	1.1	0.33	1.2 U	1.2	0.35	1.3 U	1.3	0.37	1.4 U	1.4	0.39
1,3-Dichloropropane	---	1.2 U	1.2	0.26	1.1 U	1.1	0.24	1.2 U	1.2	0.25	1.3 U	1.3	0.27	1.4 U	1.4	0.28
Isopropylbenzene	78,000	1.2 U	1.2	0.29	1.1 U	1.1	0.27	1.2 U	1.2	0.28	1.3 U	1.3	0.30	1.4 U	1.4	0.31
n-Propylbenzene	11,000	1.2 U	1.2	0.34	1.1 U	1.1	0.31	1.2 U	1.2	0.32	1.3 U	1.3	0.35	1.4 U	1.4	0.37
Bromobenzene	---	1.2 U	1.2	0.19	1.1 U	1.1	0.17	1.2 U	1.2	0.18	1.3 U	1.3	0.19	1.4 U	1.4	0.21
2-Chlorotoluene	---	1.2 U	1.2	0.38	1.1 U	1.1	0.34	1.2 U	1.2	0.36	1.3 U	1.3	0.38	1.4 U	1.4	0.41
4-Chlorotoluene	400,000	1.2 U	1.2	0.35	1.1 U	1.1	0.32	1.2 U	1.2	0.33	1.3 U	1.3	0.35	1.4 U	1.4	0.37
tert-Butylbenzene	---	1.2 U	1.2	0.38	1.1 U	1.1	0.35	1.2 U	1.2	0.37	1.3 U	1.3	0.39	1.4 U	1.4	0.41
sec-Butylbenzene	---	1.2 U	1.2	0.30	**0.8** J1	1.1	0.27	1.2 U	1.2	0.29	1.3 U	1.3	0.31	1.4 U	1.4	0.32
4-Isopropyltoluene	---	1.2 U	1.2	0.30	1.1 U	1.1	0.27	1.2 U	1.2	0.28	1.3 U	1.3	0.30	1.4 U	1.4	0.32
n-Butylbenzene	27,000	1.2 U	1.2	0.33	1.1 U	1.1	0.30	1.2 U	1.2	0.31	1.3 U	1.3	0.33	1.4 U	1.4	0.35
1,2,4-Trichlorobenzene	80	6.2 U	6.2	0.42	5.7 U	5.7	0.38	6.0 U	6.0	0.40	6.4 U	6.4	0.42	6.8 U	6.8	0.45
Naphthalene	2,100	6.2 U	6.2	0.54	5.7 U	5.7	0.49	6.0 U	6.0	0.51	6.4 U	6.4	0.55	6.8 U	6.8	0.58
1,2,3-Trichlorobenzene	---	6.2 U	6.2	0.38	5.7 U	5.7	0.35	6.0 U	6.0	0.36	6.4 U	6.4	0.39	6.8 U	6.8	0.41
SEMIVOLATILES (µg/kg)																
Method SW8270D																
Phenol	1,900,000	20 U	20	8.6	19 U	19	8.1	19 U	19	8.0	19 U	19	8.4	19 U	19	8.4
Bis-(2-Chloroethyl) Ether	---	20 U	20	3.3	19 U	19	3.1	19 U	19	3.1	19 U	19	3.2	19 U	19	3.2
2-Chlorophenol	---	20 U	20	2.4	19 U	19	2.2	19 U	19	2.2	19 U	19	2.3	19 U	19	2.3
1,3-Dichlorobenzene	3,840	20 U	20	2.6	19 U	19	2.5	19 U	19	2.4	19 U	19	2.5	19 U	19	2.5
1,4-Dichlorobenzene	3,500	20 U	20	2.8	19 U	19	2.7	19 U	19	2.7	19 U	19	2.8	19 U	19	2.8
Benzyl Alcohol	8,000,000	20 U	20	6.0	19 U	19	5.7	19 U	19	5.7	19 U	19	5.9	19 U	19	5.9
1,2-Dichlorobenzene	68,000	20 U	20	2.5	19 U	19	2.3	19 U	19	2.3	19 U	19	2.4	19 U	19	2.4
2-Methylphenol	250,000	20 U	20	5.2	19 U	19	4.9	19 U	19	4.9	19 U	19	5.1	19 U	19	5.1
2,2'-Oxybis(1-Chloropropane)	---	20 U	20	3.7	19 U	19	3.5	19 U	19	3.5	19 U	19	3.6	19 U	19	3.6
4-Methylphenol	41,000	40 U	40	6.6	38 U	38	6.2	37 U	37	6.2	39 U	39	6.4	39 U	39	6.4
N-Nitroso-Di-N-Propylamine	---	20 U	20	3.3	19 U	19	3.2	19 U	19	3.1	19 U	19	3.2	19 U	19	3.2
Hexachloroethane	---	20 U	20	2.9	19 U	19	2.8	19 U	19	2.7	19 U	19	2.8	19 U	19	2.8
Nitrobenzene	---	20 U	20	4.0	19 U	19	3.8	19 U	19	3.8	19 U	19	3.9	19 U	19	3.9
Isophorone	---	20 U	20	2.8	19 U	19	2.7	19 U	19	2.7	19 U	19	2.8	19 U	19	2.8
2-Nitrophenol	---	99 U	99	38	94 U	94	36	93 U	93	36	97 U	97	37	97 U	97	37
2,4-Dimethylphenol	95,000	40 UJ	40	3.4	38 UJ	38	3.2	37 UJ	37	3.2	39 U	39	3.3	39 U	39	3.3
Benzoic Acid	9,000	400 U	400	100	380 U	380	95	370 U	370	94	390 U	390	98	390 U	390	98
bis(2-Chloroethoxy) Methane	---	20 U	20	2.0	19 U	19	1.9	19 U	19	1.9	19 U	19	1.9	19 U	19	1.9
2,4-Dichlorophenol	---	200 U	200	21	190 U	190	20	190 U	190	20	190 U	190	21	190 U	190	21
1,2,4-Trichlorobenzene	80	20 U	20	3.4	19 U	19	3.3	19 U	19	3.2	19 U	19	3.4	19 U	19	3.4
Naphthalene	2,100	20 U	20	2.7	19 U	19	2.6	19 U	19	2.6	**12** J1	19	2.7	**9.7** J1	19	2.7
4-Chloroaniline	---	270 U	270	22	250 U	250	21	250 U	250	21	260 U	260	22	260 U	260	22
Hexachlorobutadiene	---	99 U	99	4.5	94 U	94	4.3	93 U	93	4.3	97 U	97	4.4	97 U	97	4.4
4-Chloro-3-methylphenol	740,000	99 U	99	15	94 U	94	14	93 U	93	14	97 U	97	15	97 U	97	15
2-Methylnaphthalene	320,000	20 U	20	3.0	19 U	19	2.9	19 U	19	2.8	19 U	19	3.0	19 U	19	3.0
Hexachlorocyclopentadiene	---	400 UJ	400	66	380 UJ	380	62	370 UJ	370	62	390 UJ	390	64	390 UJ	390	64
2,4,6-Trichlorophenol	---	99 U	99	22	94 U	94	21	93 U	93	21	97 U	97	22	97 U	97	22
2,4,5-Trichlorophenol	---	99 U	99	21	94 U	94	20	93 U	93	20	97 U	97	21	97 U	97	21
2-Chloronaphthalene	---	20 U	20	2.6	19 U	19	2.5	19 U	19	2.5	19 U	19	2.6	19 U	19	2.6
2-Nitroaniline	---	99 U	99	18	94 U	94	17	93 U	93	17	97 U	97	18	97 U	97	18
Dimethylphthalate	71	20 U	20	2.9	19 U	19	2.7	19 U	19	2.7	**12** J1	19	2.8	19 U	19	2.8
Acenaphthylene	---	20 U	20	5.7	19 U	19	5.4	19 U	19	5.3	19 U	19	5.5	19 U	19	5.5
3-Nitroaniline	---	99 U	99	22	94 U	94	21	93 U	93	21	97 U	97	22	97 U	97	22
Acenaphthene	230,000	20 U	20	3.3	19 U	19	3.1	**16** J1	19	3.1	19 U	19	3.2	19 U	19	3.2
2,4-Dinitrophenol	---	840 U	840	110	800 U	800	100	790 U	790	100	820 U	820	110	820 U	820	110
4-Nitrophenol	---	99 UJ	99	34	94 UJ	94	33	93 UJ	93	32	97 UJ	97	34	97 UJ	97	34
Dibenzofuran	80,000	20 U	20	4.1	19 U	19	3.8	19 U	19	3.8	19 U	19	4.0	19 U	19	4.0
2,6-Dinitrotoluene	---	99 U	99	30	94 U	94	29	93 U	93	28	97 U	97	30	97 U	97	30

TABLE M-3
MONITORING WELL BORINGS SOIL ANALYTICAL RESULTS
BOEING ISAACSON-THOMPSON
REMEDIAL INVESTIGATION

	Preliminary Cleanup Level	IT-MW-6(14-15.5) TV16D 11/02/2011			IT-MW-6(20-21.5) TV16E 11/02/2011			IT-MW-6(23-24.5) TV16F 11/02/2011			IT-MW-7(2-3.5) TU65A 10/31/2011			IT-MW-7(5-6.5) TU65B 10/31/2011		
		Result	Reporting Limit	Detection Limit	Result	Reporting Limit	Detection Limit	Result	Reporting Limit	Detection Limit	Result	Reporting Limit	Detection Limit	Result	Reporting Limit	Detection Limit
2,4-Dinitrotoluene	---	99 U	99	19	94 U	94	18	93 U	93	18	97 U	97	19	97 U	97	19
Diethylphthalate	178,000	50 U	50	36	47 U	47	34	46 U	46	34	48 U	48	35	48 U	48	35
4-Chlorophenyl-phenylether	---	20 U	20	5.2	19 U	19	5.0	19 U	19	4.9	19 U	19	5.1	19 U	19	5.1
Fluorene	150,000	20 U	20	4.3	19 U	19	4.1	19 U	19	4.0	19 U	19	4.2	19 U	19	4.2
4-Nitroaniline	---	99 U	99	38	94 U	94	36	93 U	93	35	97 U	97	37	97 U	97	37
4,6-Dinitro-2-Methylphenol	---	200 U	200	21	190 U	190	20	190 U	190	20	190 U	190	21	190 U	190	20
N-Nitrosodiphenylamine	204,000	20 U	20	5.3	19 U	19	5.1	19 U	19	5.0	19 U	19	5.2	19 U	19	5.2
4-Bromophenyl-phenylether	---	20 U	20	5.0	19 U	19	4.7	19 U	19	4.7	19 U	19	4.9	19 U	19	4.9
Hexachlorobenzene	---	20 U	20	4.3	19 U	19	4.0	19 U	19	4.0	19 U	19	4.1	19 U	19	4.1
Pentachlorophenol	---	200 UJ	200	48	190 UJ	190	46	190 UJ	190	45	190 UJ	190	47	190 UJ	190	47
Phenanthrene	---	20 U	20	3.6	19 U	19	3.4	**22**	19	3.4	**18** J1	19	3.5	**24**	19	3.5
Carbazole	50,000	20 U	20	2.7	19 U	19	2.5	19 U	19	2.5	19 U	19	2.6	19 U	19	2.6
Anthracene	1,600,000	20 U	20	4.5	19 U	19	4.2	19 U	19	4.2	19 U	19	4.4	19 U	19	4.3
Di-n-Butylphthalate	26,000	20 U	20	8.1	19 U	19	7.7	19 U	19	7.6	**96**	19	7.9	**11** J1	19	7.9
Fluoranthene	230,000	20 U	20	2.9	19 U	19	2.7	19 U	19	2.7	**18** J1	19	2.8	**16** J1	19	2.8
Pyrene	240,000	20 U	20	1.9	19 U	19	1.8	19 U	19	1.8	**16** J1	19	1.9	**13** J1	19	1.9
Butylbenzylphthalate	1,700	20 U	20	6.1	19 U	19	5.8	19 U	19	5.7	**200**	19	5.9	**16** J1	19	5.9
3,3'-Dichlorobenzidine	---	150 UJ	150	18	140 UJ	140	17	140 UJ	140	17	140 UJ	140	17	140 UJ	140	17
Benzo(a)anthracene	---	20 U	20	3.3	19 U	19	3.1	19 U	19	3.1	19 U	19	3.2	19 U	19	3.2
bis(2-Ethylhexyl)phthalate	56,600	25 U	25	14	**17** J1	24	14	**14** J1	23	14	22 UJ2	24	14	16 UJ2	24	14
Chrysene	---	20 U	20	3.7	19 U	19	3.5	19 U	19	3.5	**19**	19	3.6	**14** J1	19	3.6
Di-n-Octyl phthalate	---	20 U	20	5.8	19 U	19	5.5	19 U	19	5.4	19 U	19	5.6	19 U	19	5.6
Benzo(a)pyrene	---	20 U	20	5.4	19 U	19	5.1	19 U	19	5.1	19 U	19	5.3	19 U	19	5.3
Indeno(1,2,3-cd)pyrene	---	20 U	20	4.6	19 U	19	4.4	19 U	19	4.4	19 U	19	4.5	19 U	19	4.5
Dibenz(a,h)anthracene	---	20 U	20	4.3	19 U	19	4.0	19 U	19	4.0	19 U	19	4.2	19 U	19	4.2
Benzo(g,h,i)perylene	---	20 U	20	4.4	19 U	19	4.1	19 U	19	4.1	**9.7** J1	19	4.3	19 U	19	4.3
1-Methylnaphthalene	16,000	20 U	20	2.7	19 U	19	2.5	19 U	19	2.5	19 U	19	2.6	19 U	19	2.6
Total Benzofluoranthenes	---	20 U	20	2.7	19 U	19	2.6	19 U	19	2.6	**24**	19	2.7	**17** J1	19	2.7
cPAH TEQ	15	ND	NA	NA	ND	NA	NA	ND	NA	NA	**3** J	NA	NA	**2** J	NA	NA
PAHs (µg/kg)																
Method SW8270D-SIM																
Naphthalene	2,100	4.9 U	4.9	2.6	**2.6** J1	4.8	2.5	4.8 U	4.8	2.5	**17**	4.8	2.5	**7.4**	4.8	2.5
2-Methylnaphthalene	320,000	4.9 U	4.9	1.5	**3.0** J1	4.8	1.5	4.8 U	4.8	1.5	**13**	4.8	1.5	**9.6**	4.8	1.5
1-Methylnaphthalene	16,000	4.9 U	4.9	1.7	4.8 U	4.8	1.7	4.8 U	4.8	1.6	**22**	4.8	1.7	**9.0**	4.8	1.6
Total Naphthalenes	---	4.9 U	NA	NA	**5.6** J1	NA	NA	4.8 U	NA	NA	**52**	NA	NA	**26**	NA	NA
Acenaphthylene	---	4.9 U	4.9	1.2	4.8 U	4.8	1.2	4.8 U	4.8	1.2	**21**	4.8	1.2	4.8 U	4.8	1.2
Acenaphthene	230,000	4.9 U	4.9	1.3	**3.9** J1	4.8	1.3	**20**	4.8	1.3	**42**	4.8	1.3	4.8 U	4.8	1.3
Fluorene	150,000	4.9 U	4.9	1.3	**3.5** J1	4.8	1.2	4.8 U	4.8	1.2	**76**	4.8	1.2	4.8 U	4.8	1.2
Phenanthrene	---	4.9 U	4.9	2.0	**11**	4.8	1.9	**26**	4.8	1.9	**1100**	24	9.6	**29**	4.8	1.9
Anthracene	1,600,000	4.9 U	4.9	1.4	**3.7** J1	4.8	1.4	4.8 U	4.8	1.4	**130**	4.8	1.4	4.8 U	4.8	1.4
Fluoranthene	230,000	4.9 U	4.9	1.7	4.8 U	4.8	1.7	4.8 U	4.8	1.7	**1400**	24	8.6	**22**	4.8	1.7
Pyrene	240,000	4.9 U	4.9	2.2	4.8 U	4.8	2.1	4.8 U	4.8	2.1	**1300**	24	11	**19**	4.8	2.1
Benzo(a)anthracene	---	4.9 U	4.9	1.6	4.8 U	4.8	1.5	4.8 U	4.8	1.5	**420**	4.8	1.5	**7.6**	4.8	1.5
Chrysene	---	4.9 U	4.9	1.9	4.8 U	4.8	1.8	4.8 U	4.8	1.8	**430**	4.8	1.8	**16**	4.8	1.8
Benzo(a)pyrene	---	4.9 U	4.9	1.7	4.8 U	4.8	1.7	4.8 U	4.8	1.7	**390**	4.8	1.7	**8.5**	4.8	1.7
Indeno(1,2,3-cd)pyrene	---	4.9 U	4.9	3.4	4.8 U	4.8	3.4	4.8 U	4.8	3.3	**240**	4.8	3.4	**7.4**	4.8	3.3
Dibenz(a,h)anthracene	---	4.9 U	4.9	2.3	4.8 U	4.8	2.3	4.8 U	4.8	2.3	**70**	4.8	2.3	4.8 U	4.8	2.3
Benzo(g,h,i)perylene	---	4.9 U	4.9	3.0	4.8 U	4.8	3.0	4.8 U	4.8	2.9	**270**	4.8	2.9	**8.2**	4.8	2.9
Dibenzofuran	80,000	4.9 U	4.9	1.5	4.8 U	4.8	1.5	4.8 U	4.8	1.5	**31**	4.8	1.5	**5.7**	4.8	1.5
Total Benzofluoranthenes	---	4.9 U	4.9	1.8	4.8 U	4.8	1.8	4.8 U	4.8	1.8	**700**	24	8.9	**18**	4.8	1.8
cPAH TEQ	15	ND	NA	NA	ND	NA	NA	ND	NA	NA	**537**	NA	NA	**12.0**	NA	NA

TABLE M-3
MONITORING WELL BORINGS SOIL ANALYTICAL RESULTS
BOEING ISAACSON-THOMPSON
REMEDIAL INVESTIGATION

	Preliminary Cleanup Level	IT-MW-6(14-15.5) TV16D 11/02/2011			IT-MW-6(20-21.5) TV16E 11/02/2011			IT-MW-6(23-24.5) TV16F 11/02/2011			IT-MW-7(2-3.5) TU65A 10/31/2011			IT-MW-7(5-6.5) TU65B 10/31/2011		
		Result	Reporting Limit	Detection Limit	Result	Reporting Limit	Detection Limit	Result	Reporting Limit	Detection Limit	Result	Reporting Limit	Detection Limit	Result	Reporting Limit	Detection Limit
PCBs (µg/kg)																
Method SW8082																
Aroclor 1016	0.72	32 U	32	1.9	31 U	31	1.9	31 U	31	1.9	170 U	170	10	33 U	33	2.0
Aroclor 1242	0.72	32 U	32	2.4	31 U	31	2.3	31 U	31	2.3	170 U	170	12	33 U	33	2.5
Aroclor 1248	220	32 U	32	2.4	31 U	31	2.3	31 U	31	2.3	210 U	210	12	33 U	33	2.5
Aroclor 1254	0.29	32 U	32	2.4	31 U	31	2.3	31 U	31	2.3	**660**	170	12	**50**	33	2.5
Aroclor 1260	5.4	32 U	32	2.4	31 U	31	2.3	31 U	31	2.3	170 U	170	12	33 U	33	2.5
Aroclor 1221	---	32 U	32	2.4	31 U	31	2.3	31 U	31	2.3	170 U	170	12	33 U	33	2.5
Aroclor 1232	---	32 U	32	2.4	31 U	31	2.3	31 U	31	2.3	170 U	170	12	33 U	33	2.5
Total PCBs	1.8	ND	NA	NA	ND	NA	NA	ND	NA	NA	**660**	NA	NA	**50**	NA	NA
TOTAL PETROLEUM HYDROCARBONS (mg/kg)																
NWTPH-Dx																
Diesel-Range Organics	2,000	6.4 U	6.4	1.6	**12**	12	1.6	6.2 U	6.2	1.6	**18**	5.6	1.4	**6.8**	5.8	1.5
Motor Oil-Range Organics	2,000	13 U	13	2.0	**46**	46	1.9	12 U	12	1.9	**27**	11	1.8	**28**	12	1.8
NWTPH-G																
Gasoline-Range Organics	100/30	7.8 U	7.8	3.8	**12**	8.0	3.8	7.8 U	7.8	3.7	7.2 U	7.2	3.4	7.9 U	7.9	3.8
TOTAL METALS (mg/kg)																
Methods 200.8/7471A/SW7196A																
Antimony	5	0.3 U	0.3	0.017	0.3 U	0.3	0.016	0.2 U	0.2	0.016	0.2 U	0.2	0.014	0.2 U	0.2	0.015
Arsenic	7	**1.1**	0.3	0.11	**1.3**	0.3	0.11	**1.0**	0.2	0.10	**5.6**	0.2	0.096	**24.5**	0.2	0.10
Barium	640	**41.6**	0.7	0.073	**22.4**	0.6	0.070	**23.4**	0.6	0.067	**51.3**	0.6	0.062	**62.1**	0.6	0.064
Beryllium	160	0.3 U	0.3	0.024	0.3 U	0.3	0.023	0.2 U	0.2	0.022	0.2 U	0.2	0.020	**0.3**	0.2	0.021
Cadmium	1.3	0.1 U	0.1	0.016	0.1 U	0.1	0.015	0.1 U	0.1	0.014	**0.3**	0.1	0.013	**0.4**	0.1	0.014
Chromium	1,480	**14.6**	0.7	0.050	**9.2**	0.6	0.048	**10.9**	0.6	0.046	**19.1**	0.6	0.042	**16.8**	0.6	0.043
Chromium VI	3.8	0.532 U	0.532	0.030	0.511 U	0.511	0.030	0.491 U	0.491	0.030	0.462 U	0.462	0.030	0.472 U	0.472	0.030
Copper	36	**18.8**	0.7	0.047	**11.4**	0.6	0.045	**9.7**	0.6	0.043	**25.2**	0.6	0.040	**26.1**	0.6	0.041
Lead	250	**2.3**	0.1	0.062	**1.1**	0.1	0.059	**1.1**	0.1	0.057	**36.6**	0.1	0.052	**22.0**	0.1	0.054
Mercury	1.5	0.03 U	0.03	0.0015	0.02 U	0.02	0.0013	0.03 U	0.03	0.0014	**0.05**	0.03	0.0013	**0.08**	0.02	0.0011
Nickel	210	**9.8**	0.7	0.064	**7.9**	0.6	0.062	**7.7**	0.6	0.059	**12.1**	0.6	0.054	**15.3**	0.6	0.056
Selenium	1.0	0.7 U	0.7	0.13	0.6 U	0.6	0.12	0.6 U	0.6	0.12	0.6 U	0.6	0.11	0.6 U	0.6	0.11
Silver	170	0.3 U	0.3	0.010	0.3 U	0.3	0.010	0.2 U	0.2	0.0096	**0.3**	0.2	0.0088	0.2 U	0.2	0.0092
Thallium	0.67	0.3 U	0.3	0.0039	0.3 U	0.3	0.0038	0.2 U	0.2	0.0036	0.2 U	0.2	0.0033	0.2 U	0.2	0.0034
Zinc	1,400	**25**	5	0.44	**20**	5	0.43	**22**	5	0.41	**47**	4	0.37	**70**	5	0.39

TABLE M-3
MONITORING WELL BORINGS SOIL ANALYTICAL RESULTS
BOEING ISAACSON-THOMPSON
REMEDIAL INVESTIGATION

	Preliminary Cleanup Level	IT-MW-7(8-9.5) TV85A 11/04/2011			IT-MW-7(13.5-15) TV85B 11/04/2011			IT-MW-8(2-3.5) TV99A 11/07/2011			IT-MW-8(5-6.5) TV99B 11/07/2011			IT-MW-8(8-9.5) TV99C 11/07/2011		
		Result	Reporting Limit	Detection Limit	Result	Reporting Limit	Detection Limit	Result	Reporting Limit	Detection Limit	Result	Reporting Limit	Detection Limit	Result	Reporting Limit	Detection Limit
VOLATILES (µg/kg)																
Method SW8260C																
Chloromethane	1,600	1.2 U	1.2	0.32	1.2 U	1.3	0.33	1.2 U	1.2	0.32	**0.7** J1	1.4	0.36	**0.7** J1	1.4	0.36
Bromomethane	---	1.2 U	1.2	0.23	1.2 U	1.3	0.23	1.2 UJ	1.2	0.23	1.4 UJ	1.4	0.26	1.4 UJ	1.4	0.25
Vinyl Chloride	7.4	1.2 U	1.2	0.29	1.2 U	1.3	0.29	1.2 U	1.2	0.29	1.4 U	1.4	0.33	1.4 U	1.4	0.32
Chloroethane	280,000	1.2 U	1.2	0.56	1.2 U	1.3	0.58	1.2 U	1.2	0.56	1.4 U	1.4	0.64	1.4 U	1.4	0.63
Methylene Chloride	2400	**1.9** J	2.4	0.77	**4.2** J	2.5	0.80	**2.4** J1	2.4	0.78	**2.9**	2.8	0.88	**2.8**	2.7	0.87
Acetone	510,000	25 U	6.1	0.59	**14**	6.3	0.60	**9.9**	6.1	0.59	6.9 U	6.9	0.67	**47**	6.8	0.66
Carbon Disulfide	75,000	1.2 U	1.2	0.68	1.2 U	1.3	0.70	1.2 U	1.2	0.68	1.4 U	1.4	0.77	1.4 U	1.4	0.76
1,1-Dichloroethene	81	1.2 U	1.2	0.41	1.2 U	1.3	0.42	1.2 U	1.2	0.41	1.4 U	1.4	0.47	1.4 U	1.4	0.46
1,1-Dichloroethane	710	1.2 UJ	1.2	0.25	1.2 U	1.3	0.25	1.2 U	1.2	0.25	1.4 U	1.4	0.28	1.4 U	1.4	0.28
trans-1,2-Dichloroethene	19,000	1.2 U	1.2	0.32	1.2 U	1.3	0.33	1.2 U	1.2	0.33	1.4 U	1.4	0.37	1.4 U	1.4	0.36
cis-1,2-Dichloroethene	2,600	1.2 U	1.2	0.29	1.2 U	1.3	0.30	1.2 U	1.2	0.29	1.4 U	1.4	0.33	1.4 U	1.4	0.33
Chloroform	200	1.2 U	1.2	0.29	1.2 U	1.3	0.29	1.2 U	1.2	0.29	1.4 U	1.4	0.32	1.4 U	1.4	0.32
1,2-Dichloroethane	70	1.2 U	1.2	0.23	1.2 U	1.3	0.24	1.2 U	1.2	0.23	1.4 U	1.4	0.26	1.4 U	1.4	0.26
2-Butanone	430,000	6.1 UJ	6.1	0.63	6.0 U	6.3	0.64	6.1 U	6.1	0.63	6.9 U	6.9	0.71	6.8 U	6.8	0.70
1,1,1-Trichloroethane	1,900,000	1.2 U	1.2	0.28	1.2 U	1.3	0.28	1.2 U	1.2	0.28	1.4 U	1.4	0.31	1.4 U	1.4	0.31
Carbon Tetrachloride	21	1.2 U	1.2	0.26	1.2 U	1.3	0.27	1.2 U	1.2	0.26	1.4 U	1.4	0.30	1.4 U	1.4	0.29
Vinyl Acetate	---	6.1 U	6.1	0.46	6.0 U	6.3	0.48	6.1 U	6.1	0.47	6.9 U	6.9	0.53	6.8 U	6.8	0.52
Bromodichloromethane	89	1.2 U	1.2	0.31	1.2 U	1.3	0.32	1.2 U	1.2	0.31	1.4 U	1.4	0.35	1.4 U	1.4	0.35
1,2-Dichloropropane	92	1.2 U	1.2	0.20	1.2 U	1.3	0.20	1.2 U	1.2	0.20	1.4 U	1.4	0.22	1.4 U	1.4	0.22
cis-1,3-Dichloropropene	---	1.2 U	1.2	0.28	1.2 U	1.3	0.28	1.2 U	1.2	0.28	1.4 U	1.4	0.31	1.4 U	1.4	0.31
Trichloroethene	51	1.2 U	1.2	0.26	**1.4**	1.3	0.27	1.2 U	1.2	0.26	1.4 U	1.4	0.29	1.4 U	1.4	0.29
Dibromochloromethane	---	1.2 U	1.2	0.32	1.2 U	1.3	0.33	1.2 U	1.2	0.33	1.4 U	1.4	0.37	1.4 U	1.4	0.36
1,1,2-Trichloroethane	73	1.2 U	1.2	0.35	1.2 U	1.3	0.36	1.2 U	1.2	0.35	1.4 U	1.4	0.40	1.4 U	1.4	0.39
Benzene	93	1.2 U	1.2	0.36	1.2 U	1.3	0.37	1.2 U	1.2	0.36	1.4 U	1.4	0.41	1.4 U	1.4	0.40
trans-1,3-Dichloropropene	---	1.2 U	1.2	0.26	1.2 U	1.3	0.27	1.2 U	1.2	0.26	1.4 U	1.4	0.30	1.4 U	1.4	0.29
2-Chloroethylvinylether	---	6.1 U	6.1	0.34	6.0 U	6.3	0.35	6.1 U	6.1	0.34	6.9 U	6.9	0.38	6.8 U	6.8	0.38
Bromoform	---	1.2 U	1.2	0.36	1.2 U	1.3	0.37	1.2 U	1.2	0.36	1.4 U	1.4	0.41	1.4 U	1.4	0.40
4-Methyl-2-Pentanone (MIBK)	170,000	6.1 U	6.1	0.51	6.0 U	6.3	0.53	6.1 U	6.1	0.51	6.9 U	6.9	0.58	6.8 U	6.8	0.57
2-Hexanone	32,000	6.1 U	6.1	0.54	6.0 U	6.3	0.55	6.1 U	6.1	0.54	6.9 U	6.9	0.61	6.8 U	6.8	0.60
Tetrachloroethene	260	**0.9** J1	1.2	0.31	1.7 U	1.3	0.32	1.2 U	1.2	0.31	1.4 U	1.4	0.36	1.4 U	1.4	0.35
1,1,2,2-Tetrachloroethane	13	1.2 U	1.2	0.31	1.2 U	1.3	0.32	1.2 U	1.2	0.31	1.4 U	1.4	0.35	1.4 U	1.4	0.34
Toluene	100,000	1.2 U	1.2	0.18	1.2 U	1.3	0.19	1.2 U	1.2	0.18	1.4 U	1.4	0.21	1.4 U	1.4	0.21
Chlorobenzene	26,000	1.2 U	1.2	0.27	1.2 U	1.3	0.27	1.2 U	1.2	0.27	1.4 U	1.4	0.30	1.4 U	1.4	0.30
Ethylbenzene	230	1.2 U	1.2	0.25	1.2 U	1.3	0.25	1.2 U	1.2	0.25	1.4 U	1.4	0.28	1.4 U	1.4	0.28
Styrene	16,000,000	1.2 U	1.2	0.17	1.2 U	1.3	0.17	1.2 U	1.2	0.17	1.4 U	1.4	0.19	1.4 U	1.4	0.19
Trichlorofluoromethane	200,000	1.2 U	1.2	0.32	1.2 U	1.3	0.33	1.2 U	1.2	0.33	1.4 U	1.4	0.37	1.4 U	1.4	0.36
1,1,2-Trichloro-1,2,2-trifuoroethane	1,000,000,000	2.4 U	2.4	0.35	2.4 U	2.5	0.36	2.4 U	2.4	0.35	2.8 U	2.8	0.40	2.7 U	2.7	0.39
m,p-Xylene	160,000	1.2 U	1.2	0.48	1.2 U	1.3	0.49	1.2 U	1.2	0.48	1.4 U	1.4	0.54	1.4 U	1.4	0.53
o-Xylene	200,000	1.2 U	1.2	0.27	1.2 U	1.3	0.28	1.2 U	1.2	0.27	1.4 U	1.4	0.31	1.4 U	1.4	0.31
1,2-Dichlorobenzene	68,000	1.2 U	1.2	0.36	1.2 U	1.3	0.37	1.2 U	1.2	0.36	1.4 U	1.4	0.41	1.4 U	1.4	0.40
1,3-Dichlorobenzene	3,840	1.2 U	1.2	0.28	1.2 U	1.3	0.28	1.2 U	1.2	0.28	1.4 U	1.4	0.31	1.4 U	1.4	0.31
1,4-Dichlorobenzene	3,500	1.2 U	1.2	0.28	1.2 U	1.3	0.29	1.2 U	1.2	0.28	1.4 U	1.4	0.32	1.4 U	1.4	0.32
Acrolein	---	61 UJ	61	4.6	60 U	63	4.8	61 U	61	4.7	69 U	69	5.3	68 U	68	5.2
Methyl Iodide	---	1.2 U	1.2	0.26	1.2 U	1.3	0.27	1.2 U	1.2	0.26	**1.5**	1.4	0.30	**1.8**	1.4	0.29
Bromoethane	---	2.4 U	2.4	0.54	2.4 U	2.5	0.55	2.4 U	2.4	0.54	2.8 U	2.8	0.61	2.7 U	2.7	0.60
Acrylonitrile	---	6.1 U	6.1	1.3	6.0 U	6.3	1.3	6.1 U	6.1	1.3	6.9 U	6.9	1.4	6.8 U	6.8	1.4
1,1-Dichloropropene	---	1.2 U	1.2	0.38	1.2 U	1.3	0.39	1.2 U	1.2	0.38	1.4 U	1.4	0.43	1.4 U	1.4	0.43
Dibromomethane	---	1.2 U	1.2	0.18	1.2 U	1.3	0.18	1.2 U	1.2	0.18	1.4 U	1.4	0.20	1.4 U	1.4	0.20
1,1,1,2-Tetrachloroethane	---	1.2 U	1.2	0.28	1.2 U	1.3	0.29	1.2 U	1.2	0.28	1.4 U	1.4	0.32	1.4 U	1.4	0.32
1,2-Dibromo-3-chloropropane	---	6.1 U	6.1	0.71	6.0 U	6.3	0.73	6.1 U	6.1	0.72	6.9 U	6.9	0.81	6.8 U	6.8	0.80
1,2,3-Trichloropropane	---	2.4 U	2.4	0.63	2.4 U	2.5	0.65	2.4 U	2.4	0.63	2.8 U	2.8	0.72	2.7 U	2.7	0.70
trans-1,4-Dichloro-2-butene	---	6.1 U	6.1	0.53	6.0 U	6.3	0.55	6.1 U	6.1	0.53	6.9 U	6.9	0.61	6.8 U	6.8	0.60
1,3,5-Trimethylbenzene	800,000	1.2 U	1.2	0.31	1.2 U	1.3	0.32	1.2 U	1.2	0.31	1.4 U	1.4	0.35	1.4 U	1.4	0.35
1,2,4-Trimethylbenzene	800,000	1.2 U	1.2	0.28	1.2 U	1.3	0.29	1.2 U	1.2	0.28	1.4 U	1.4	0.32	1.4 U	1.4	0.31
Hexachlorobutadiene	---	6.1 U	6.1	0.50	6.0 U	6.3	0.51	6.1 U	6.1	0.50	6.9 U	6.9	0.57	6.8 U	6.8	0.56

TABLE M-3
MONITORING WELL BORINGS SOIL ANALYTICAL RESULTS
BOEING ISAACSON-THOMPSON
REMEDIAL INVESTIGATION

	Preliminary Cleanup Level	IT-MW-7(8-9.5) TV85A 11/04/2011			IT-MW-7(13.5-15) TV85B 11/04/2011			IT-MW-8(2-3.5) TV99A 11/07/2011			IT-MW-8(5-6.5) TV99B 11/07/2011			IT-MW-8(8-9.5) TV99C 11/07/2011		
		Result	Reporting Limit	Detection Limit	Result	Reporting Limit	Detection Limit	Result	Reporting Limit	Detection Limit	Result	Reporting Limit	Detection Limit	Result	Reporting Limit	Detection Limit
Ethylene Dibromide	---	1.2 U	1.2	0.21	1.2 U	1.3	0.22	1.2 U	1.2	0.22	1.4 U	1.4	0.24	1.4 U	1.4	0.24
Bromochloromethane	---	1.2 U	1.2	0.39	1.2 U	1.3	0.40	1.2 U	1.2	0.39	1.4 U	1.4	0.45	1.4 U	1.4	0.44
2,2-Dichloropropane	---	1.2 U	1.2	0.36	1.2 U	1.3	0.37	1.2 U	1.2	0.36	1.4 U	1.4	0.40	1.4 U	1.4	0.40
1,3-Dichloropropane	---	1.2 U	1.2	0.25	1.2 U	1.3	0.26	1.2 U	1.2	0.26	1.4 U	1.4	0.29	1.4 U	1.4	0.28
Isopropylbenzene	78,000	1.2 U	1.2	0.28	1.2 U	1.3	0.29	1.2 U	1.2	0.28	1.4 U	1.4	0.32	1.4 U	1.4	0.32
n-Propylbenzene	11,000	1.2 U	1.2	0.33	1.2 U	1.3	0.34	1.2 U	1.2	0.33	1.4 U	1.4	0.38	1.4 U	1.4	0.37
Bromobenzene	---	1.2 U	1.2	0.19	1.2 U	1.3	0.19	1.2 U	1.2	0.19	1.4 U	1.4	0.21	1.4 U	1.4	0.21
2-Chlorotoluene	---	1.2 U	1.2	0.37	1.2 U	1.3	0.38	1.2 U	1.2	0.37	1.4 U	1.4	0.42	1.4 U	1.4	0.41
4-Chlorotoluene	400,000	1.2 U	1.2	0.34	1.2 U	1.3	0.35	1.2 U	1.2	0.34	1.4 U	1.4	0.38	1.4 U	1.4	0.38
tert-Butylbenzene	---	1.2 U	1.2	0.37	1.2 U	1.3	0.38	1.2 U	1.2	0.37	1.4 U	1.4	0.42	1.4 U	1.4	0.42
sec-Butylbenzene	---	1.2 U	1.2	0.29	1.2 U	1.3	0.30	1.2 U	1.2	0.29	1.4 U	1.4	0.33	1.4 U	1.4	0.33
4-Isopropyltoluene	---	1.2 U	1.2	0.29	1.2 U	1.3	0.30	1.2 U	1.2	0.29	1.4 U	1.4	0.33	1.4 U	1.4	0.32
n-Butylbenzene	27,000	1.2 U	1.2	0.32	1.2 U	1.3	0.33	1.2 U	1.2	0.32	1.4 U	1.4	0.36	1.4 U	1.4	0.36
1,2,4-Trichlorobenzene	80	6.1 U	6.1	0.40	6.0 U	6.3	0.42	6.1 U	6.1	0.41	6.9 U	6.9	0.46	6.8 U	6.8	0.45
Naphthalene	2,100	6.1 U	6.1	0.52	6.0 U	6.3	0.54	6.1 U	6.1	0.52	6.9 U	6.9	0.59	6.8 U	6.8	0.58
1,2,3-Trichlorobenzene	---	6.1 U	6.1	0.37	6.0 U	6.3	0.38	6.1 U	6.1	0.37	6.9 U	6.9	0.42	6.8 U	6.8	0.42
SEMIVOLATILES (µg/kg)																
Method SW8270D																
Phenol	1,900,000	19 U	19	8.3	19 U	19	8.0	19 U	19	8.4	18 U	18	8.0	19 U	19	8.3
Bis-(2-Chloroethyl) Ether	---	19 U	19	3.2	19 U	19	3.1	19 U	19	3.3	18 U	18	3.1	19 U	19	3.2
2-Chlorophenol	---	19 U	19	2.3	19 U	19	2.2	19 U	19	2.3	18 U	18	2.2	19 U	19	2.3
1,3-Dichlorobenzene	3,840	19 U	19	2.5	19 U	19	2.4	19 U	19	2.6	18 U	18	2.4	19 U	19	2.5
1,4-Dichlorobenzene	3,500	19 U	19	2.7	19 U	19	2.7	19 U	19	2.8	18 U	18	2.6	19 U	19	2.7
Benzyl Alcohol	8,000,000	19 U	19	5.8	19 U	19	5.7	19 U	19	5.9	18 U	18	5.6	19 U	19	5.8
1,2-Dichlorobenzene	68,000	19 U	19	2.4	19 U	19	2.3	19 U	19	2.4	18 U	18	2.3	19 U	19	2.4
2-Methylphenol	250,000	19 U	19	5.0	19 U	19	4.9	19 U	19	5.1	18 U	18	4.8	19 U	19	5.0
2,2'-Oxybis(1-Chloropropane)	---	19 U	19	3.6	19 U	19	3.5	19 U	19	3.7	18 U	18	3.5	19 U	19	3.6
4-Methylphenol	41,000	38 U	38	6.4	37 U	37	6.2	39 U	39	6.4	37 U	37	6.1	38 U	38	6.3
N-Nitroso-Di-N-Propylamine	---	19 U	19	3.2	19 U	19	3.1	19 U	19	3.3	18 U	18	3.1	19 U	19	3.2
Hexachloroethane	---	19 U	19	2.8	19 U	19	2.7	19 U	19	2.9	18 U	18	2.7	19 U	19	2.8
Nitrobenzene	---	19 U	19	3.9	19 U	19	3.8	19 U	19	3.9	18 U	18	3.7	19 U	19	3.9
Isophorone	---	19 U	19	2.7	19 U	19	2.7	19 U	19	2.8	18 U	18	2.6	19 U	19	2.7
2-Nitrophenol	---	96 U	96	37	93 U	93	36	97 U	97	38	92 U	92	36	95 U	95	37
2,4-Dimethylphenol	95,000	38 U	38	3.3	37 U	37	3.2	39 U	39	3.4	37 U	37	3.2	38 U	38	3.3
Benzoic Acid	9,000	380 U	380	97	370 U	370	94	390 U	390	98	370 U	370	93	380 U	380	96
bis(2-Chloroethoxy) Methane	---	19 U	19	1.9	19 U	19	1.9	19 U	19	1.9	18 U	18	1.8	19 U	19	1.9
2,4-Dichlorophenol	---	190 U	190	21	190 U	190	20	190 U	190	21	180 U	180	20	190 U	190	21
1,2,4-Trichlorobenzene	80	19 U	19	3.3	19 U	19	3.2	19 U	19	3.4	18 U	18	3.2	19 U	19	3.3
Naphthalene	2,100	19 U	19	2.6	**11** J1	19	2.6	19 U	19	2.7	18 U	18	2.5	19 U	19	2.6
4-Chloroaniline	---	260 U	260	21	250 U	250	21	260 U	260	22	250 U	250	20	260 U	260	21
Hexachlorobutadiene	---	96 U	96	4.4	93 U	93	4.2	97 U	97	4.4	92 U	92	4.2	95 U	95	4.4
4-Chloro-3-methylphenol	740,000	96 U	96	14	93 U	93	14	97 U	97	15	92 U	92	14	95 U	95	14
2-Methylnaphthalene	320,000	19 U	19	2.9	**16** J1	19	2.8	19 U	19	3.0	18 U	18	2.8	19 U	19	2.9
Hexachlorocyclopentadiene	---	380 U	380	64	370 U	370	62	390 U	390	65	370 U	370	61	380 U	380	63
2,4,6-Trichlorophenol	---	96 U	96	21	93 U	93	21	97 U	97	22	92 U	92	21	95 U	95	21
2,4,5-Trichlorophenol	---	96 U	96	21	93 U	93	20	97 U	97	21	92 U	92	20	95 U	95	20
2-Chloronaphthalene	---	19 U	19	2.5	19 U	19	2.5	19 U	19	2.6	18 U	18	2.4	19 U	19	2.5
2-Nitroaniline	---	96 U	96	18	93 U	93	17	97 U	97	18	92 U	92	17	95 U	95	18
Dimethylphthalate	71	19 U	19	2.8	19 U	19	2.7	19 U	19	2.8	18 U	18	2.7	19 U	19	2.8
Acenaphthylene	---	19 U	19	5.5	19 U	19	5.3	19 U	19	5.5	18 U	18	5.2	19 U	19	5.4
3-Nitroaniline	---	96 U	96	22	93 U	93	21	97 U	97	22	92 U	92	21	95 U	95	21
Acenaphthene	230,000	19 U	19	3.1	19 U	19	3.0	19 U	19	3.2	18 U	18	3.0	19 U	19	3.1
2,4-Dinitrophenol	---	820 U	820	110	790 U	790	100	830 U	830	110	780 U	780	100	810 U	810	110
4-Nitrophenol	---	96 U	96	33	93 U	93	32	97 U	97	34	92 U	92	32	95 U	95	33
Dibenzofuran	80,000	19 U	19	3.9	19 U	19	3.8	19 U	19	4.0	18 U	18	3.8	19 U	19	3.9
2,6-Dinitrotoluene	---	96 U	96	29	93 U	93	28	97 U	97	30	92 U	92	28	95 U	95	29

TABLE M-3
MONITORING WELL BORINGS SOIL ANALYTICAL RESULTS
BOEING ISAACSON-THOMPSON
REMEDIAL INVESTIGATION

	Preliminary Cleanup Level	IT-MW-7(8-9.5) TV85A 11/04/2011			IT-MW-7(13.5-15) TV85B 11/04/2011			IT-MW-8(2-3.5) TV99A 11/07/2011			IT-MW-8(5-6.5) TV99B 11/07/2011			IT-MW-8(8-9.5) TV99C 11/07/2011		
		Result	Reporting Limit	Detection Limit	Result	Reporting Limit	Detection Limit	Result	Reporting Limit	Detection Limit	Result	Reporting Limit	Detection Limit	Result	Reporting Limit	Detection Limit
2,4-Dinitrotoluene	---	96 U	96	19	93 U	93	18	97 U	97	19	92 U	92	18	95 U	95	19
Diethylphthalate	178,000	48 U	48	35	46 U	46	34	49 U	49	36	46 U	46	34	48 U	48	35
4-Chlorophenyl-phenylether	---	19 U	19	5.1	19 U	19	4.9	19 U	19	5.1	18 U	18	4.9	19 U	19	5.0
Fluorene	150,000	19 U	19	4.2	19 U	19	4.0	19 U	19	4.2	18 U	18	4.0	19 U	19	4.2
4-Nitroaniline	---	96 U	96	36	93 U	93	35	97 U	97	37	92 U	92	35	95 U	95	36
4,6-Dinitro-2-Methylphenol	---	190 U	190	20	190 U	190	20	190 U	190	21	180 U	180	19	190 U	190	20
N-Nitrosodiphenylamine	204,000	19 U	19	5.2	19 U	19	5.0	19 U	19	5.2	18 U	18	5.0	19 U	19	5.1
4-Bromophenyl-phenylether	---	19 U	19	4.8	19 U	19	4.7	19 U	19	4.9	18 U	18	4.6	19 U	19	4.8
Hexachlorobenzene	---	19 U	19	4.1	19 U	19	4.0	19 U	19	4.2	18 U	18	3.9	19 U	19	4.1
Pentachlorophenol	---	190 U	190	47	190 U	190	45	190 U	190	47	180 U	180	45	190 U	190	46
Phenanthrene	---	19 U	19	3.5	19 U	19	3.4	19 U	19	3.5	18 U	18	3.3	19 U	19	3.5
Carbazole	50,000	19 U	19	2.6	19 U	19	2.5	19 U	19	2.6	18 U	18	2.5	19 U	19	2.6
Anthracene	1,600,000	19 U	19	4.3	19 U	19	4.2	19 U	19	4.4	18 U	18	4.1	19 U	19	4.3
Di-n-Butylphthalate	26,000	19 U	19	7.8	19 U	19	7.6	19 U	19	7.9	18 U	18	7.5	19 U	19	7.8
Fluoranthene	230,000	19 U	19	2.8	19 U	19	2.7	19 U	19	2.8	18 U	18	2.7	19 U	19	2.8
Pyrene	240,000	19 U	19	1.9	19 U	19	1.8	19 U	19	1.9	18 U	18	1.8	19 U	19	1.9
Butylbenzylphthalate	1,700	19 U	19	5.9	19 U	19	5.7	19 U	19	6.0	18 U	18	5.6	19 U	19	5.9
3,3'-Dichlorobenzidine	---	140 U	140	17	140 U	140	17	150 UJ	150	17	140 UJ	140	16	140 UJ	140	17
Benzo(a)anthracene	---	19 U	19	3.2	19 U	19	3.1	19 U	19	3.2	18 U	18	3.0	19 U	19	3.1
bis(2-Ethylhexyl)phthalate	56,600	36 U	24	14	84 U	23	14	31 U	24	14	140 U	23	13	74 U	24	14
Chrysene	---	19 U	19	3.6	19 U	19	3.5	19 U	19	3.6	18 U	18	3.4	19 U	19	3.6
Di-n-Octyl phthalate	---	19 U	19	5.6	19 U	19	5.4	19 U	19	5.7	18 U	18	5.4	19 U	19	5.6
Benzo(a)pyrene	---	19 U	19	5.2	19 U	19	5.1	19 U	19	5.3	18 U	18	5.0	19 U	19	5.2
Indeno(1,2,3-cd)pyrene	---	19 U	19	4.5	19 U	19	4.3	19 U	19	4.5	18 U	18	4.3	19 U	19	4.5
Dibenz(a,h)anthracene	---	19 U	19	4.1	19 U	19	4.0	19 U	19	4.2	18 U	18	4.0	19 U	19	4.1
Benzo(g,h,i)perylene	---	19 U	19	4.2	19 U	19	4.1	19 U	19	4.3	**11** J1	18	4.0	19 U	19	4.2
1-Methylnaphthalene	16,000	19 U	19	2.6	19 U	19	2.5	19 U	19	2.6	18 U	18	2.5	19 U	19	2.6
Total Benzofluoranthenes	---	19 U	19	2.6	19 U	19	2.6	19 U	19	2.7	**14** J1	18	2.5	19 U	19	2.6
cPAH TEQ	15	ND	NA	NA	ND	NA	NA	ND	NA	NA	**1.4** J	NA	NA	ND	NA	NA
PAHs (µg/kg)																
Method SW8270D-SIM																
Naphthalene	2,100	4.6 U	4.6	2.4	4.6 U	4.6	2.4	**2.6** J1	4.8	2.6	**3.2** J1	4.7	2.5	**2.8** J1	4.8	2.5
2-Methylnaphthalene	320,000	**2.3** J1	4.6	1.4	4.6 U	4.6	1.4	4.8 U	4.8	1.5	**2.5** J1	4.7	1.4	4.8 U	4.8	1.4
1-Methylnaphthalene	16,000	4.6 U	4.6	1.6	4.6 U	4.6	1.6	4.8 U	4.8	1.7	**2.4** J1	4.7	1.6	4.8 U	4.8	1.6
Total Naphthalenes	---	**2.3** J1	NA	NA	4.6 U	NA	NA	**2.6** J1	NA	NA	**8.1** J1	NA	1.2	**2.8** J1	NA	NA
Acenaphthylene	---	4.6 U	4.6	1.2	4.6 U	4.6	1.2	4.8 U	4.8	1.2	4.7 U	4.7	1.2	4.8 U	4.8	1.2
Acenaphthene	230,000	4.6 U	4.6	1.2	4.6 U	4.6	1.2	4.8 U	4.8	1.3	4.7 U	4.7	1.2	4.8 U	4.8	1.3
Fluorene	150,000	4.6 U	4.6	1.2	4.6 U	4.6	1.2	4.8 U	4.8	1.3	4.7 U	4.7	1.2	4.8 U	4.8	1.2
Phenanthrene	---	**4.6**	4.6	1.8	4.6 U	4.6	1.8	**3.4** J1	4.8	1.9	**5.4**	4.7	1.9	**3.3** J1	4.8	1.9
Anthracene	1,600,000	4.6 U	4.6	1.4	4.6 U	4.6	1.4	4.8 U	4.8	1.4	4.7 U	4.7	1.4	4.8 U	4.8	1.4
Fluoranthene	230,000	4.6 U	4.6	1.6	4.6 U	4.6	1.6	**3.1** J1	4.8	1.7	**4.5** J1	4.7	1.7	**2.9** J1	4.8	1.7
Pyrene	240,000	4.6 U	4.6	2.1	4.6 U	4.6	2.1	**2.7** J1	4.8	2.2	**3.8** J1	4.7	2.1	4.8 U	4.8	2.1
Benzo(a)anthracene	---	4.6 U	4.6	1.5	4.6 U	4.6	1.5	4.8 U	4.8	1.6	4.7 U	4.7	1.5	4.8 U	4.8	1.5
Chrysene	---	4.6 U	4.6	1.7	4.6 U	4.6	1.7	**2.9** J1	4.8	1.8	**4.4** J1	4.7	1.8	4.8 U	4.8	1.8
Benzo(a)pyrene	---	4.6 U	4.6	1.6	4.6 U	4.6	1.6	**4.0** J1	4.8	1.7	**4.0** J1	4.7	1.6	4.8 U	4.8	1.7
Indeno(1,2,3-cd)pyrene	---	4.6 U	4.6	3.2	4.6 U	4.6	3.2	**4.2** J1	4.8	3.4	**4.5** J1	4.7	3.2	4.8 U	4.8	3.3
Dibenz(a,h)anthracene	---	4.6 U	4.6	2.2	4.6 U	4.6	2.2	**3.2** J1	4.8	2.3	4.7 U	4.7	2.2	4.8 U	4.8	2.3
Benzo(g,h,i)perylene	---	4.6 U	4.6	2.8	4.6 U	4.6	2.8	**6.0**	4.8	3.0	**7.5**	4.7	2.9	4.8 U	4.8	2.9
Dibenzofuran	80,000	4.6 U	4.6	1.4	4.6 U	4.6	1.4	4.8 U	4.8	1.5	4.7 U	4.7	1.4	4.8 U	4.8	1.4
Total Benzofluoranthenes	---	4.6 U	4.6	1.7	4.6 U	4.6	1.7	**3.4** J1	4.8	1.8	4.7 U	4.7	1.7	4.8 U	4.8	1.8
cPAH TEQ	15	ND	NA	NA	ND	NA	NA	**5.1** J	NA	NA	**4.5** J	NA	NA	ND	NA	NA

TABLE M-3
MONITORING WELL BORINGS SOIL ANALYTICAL RESULTS
BOEING ISAACSON-THOMPSON
REMEDIAL INVESTIGATION

	Preliminary Cleanup Level	IT-MW-7(8-9.5) TV85A 11/04/2011			IT-MW-7(13.5-15) TV85B 11/04/2011			IT-MW-8(2-3.5) TV99A 11/07/2011			IT-MW-8(5-6.5) TV99B 11/07/2011			IT-MW-8(8-9.5) TV99C 11/07/2011		
		Result	Reporting Limit	Detection Limit	Result	Reporting Limit	Detection Limit	Result	Reporting Limit	Detection Limit	Result	Reporting Limit	Detection Limit	Result	Reporting Limit	Detection Limit
PCBs (µg/kg)																
Method SW8082																
Aroclor 1016	0.72	33 U	33	2.0	32 U	32	2.0	33 U	33	2.0	31 U	31	1.9	32 U	32	1.9
Aroclor 1242	0.72	33 U	33	2.4	32 U	32	2.4	33 U	33	2.4	31 U	31	2.3	32 U	32	2.4
Aroclor 1248	220	33 U	33	2.4	32 U	32	2.4	33 U	33	2.4	31 U	31	2.3	32 U	32	2.4
Aroclor 1254	0.29	33 U	33	2.4	32 U	32	2.4	33 U	33	2.4	31 U	31	2.3	32 U	32	2.4
Aroclor 1260	5.4	33 U	33	2.4	32 U	32	2.4	33 U	33	2.4	31 U	31	2.3	32 U	32	2.4
Aroclor 1221	---	33 U	33	2.4	32 U	32	2.4	33 U	33	2.4	31 U	31	2.3	32 U	32	2.4
Aroclor 1232	---	33 U	33	2.4	32 U	32	2.4	33 U	33	2.4	31 U	31	2.3	32 U	32	2.4
Total PCBs	1.8	ND	NA	NA	ND	NA	NA	ND	NA	NA	ND	NA	NA	ND	NA	NA
TOTAL PETROLEUM HYDROCARBONS (mg/kg)																
NWTPH-Dx																
Diesel-Range Organics	2,000	5.5 U	5.5	1.4	6.0 U	6.0	1.5	5.2 U	5.2	1.3	5.4 U	5.4	1.4	5.7 U	5.7	1.4
Motor Oil-Range Organics	2,000	11 U	11	1.7	12 U	12	1.9	**13**	10	1.6	**13**	11	1.7	11 U	11	1.8
NWTPH-G																
Gasoline-Range Organics	100/30	7.2 U	7.2	3.5	8.3 U	8.3	4.0	**24**	7.5	3.6	**6.9**	6.7	3.2	6.3 U	6.3	3.0
TOTAL METALS (mg/kg)																
Methods 200.8/7471A/SW7196A																
Antimony	5	0.2 UJ	0.2	0.015	0.2 U	0.2	0.016	0.2 U	0.2	0.013	0.2 U	0.2	0.014	0.2 U	0.2	0.015
Arsenic	7	**3.0**	0.2	0.098	**0.9**	0.2	0.11	**3.2**	0.2	0.086	**3.8**	0.2	0.090	**2.9**	0.2	0.098
Barium	640	**44.9**	0.6	0.063	**20.8**	0.6	0.068	**26.8**	0.5	0.055	**45.8**	0.5	0.058	**41.4**	0.6	0.063
Beryllium	160	0.2 U	0.2	0.020	0.2 U	0.2	0.022	0.2 U	0.2	0.018	0.2 U	0.2	0.019	0.2 U	0.2	0.020
Cadmium	1.3	0.1 U	0.1	0.013	0.1 U	0.1	0.014	0.1 U	0.1	0.012	0.1 U	0.1	0.012	0.1 U	0.1	0.014
Chromium	1,480	**11.2**	0.6	0.043	**9.8**	0.6	0.046	**8.9**	0.5	0.038	**12.5**	0.5	0.040	**11.8**	0.6	0.043
Chromium VI	3.8	0.468 U	0.468	0.030	0.524 U	0.524	0.030	0.419 U	0.419	0.030	0.438 U	0.438	0.030	0.467 U	0.467	0.030
Copper	36	**19.2**	0.6	0.040	**10.3**	0.6	0.043	**14.8**	0.5	0.036	**22.1**	0.5	0.037	**17.4**	0.6	0.041
Lead	250	**2.5**	0.1	0.053	**1.8**	0.1	0.057	**3.5**	0.1	0.046	**4.4**	0.1	0.049	**2.3**	0.1	0.053
Mercury	1.5	0.03 U	0.03	0.0014	0.02 U	0.02	0.0013	0.02 U	0.02	0.0011	0.02 U	0.02	0.0013	0.02 U	0.02	0.0012
Nickel	210	**10.4**	0.6	0.055	**6.8**	0.6	0.059	**9.0**	0.5	0.048	**11.6**	0.5	0.051	**10.3**	0.6	0.055
Selenium	1.0	0.6 U	0.6	0.11	0.6 U	0.6	0.12	0.5 U	0.5	0.098	0.5 U	0.5	0.10	0.6 U	0.6	0.11
Silver	170	0.2 U	0.2	0.0090	0.2 U	0.2	0.0097	0.2 U	0.2	0.0079	0.2 U	0.2	0.0083	0.2 U	0.2	0.0091
Thallium	0.67	0.2 U	0.2	0.0034	0.2 U	0.2	0.0036	0.2 U	0.2	0.0030	0.2 U	0.2	0.0031	0.2 U	0.2	0.0034
Zinc	1,400	**25**	4	0.38	**21**	5	0.41	**26**	4	0.33	**36**	4	0.35	**70**	5	0.38

TABLE M-3
MONITORING WELL BORINGS SOIL ANALYTICAL RESULTS
BOEING ISAACSON-THOMPSON
REMEDIAL INVESTIGATION

	Preliminary Cleanup Level	IT-MW-8(14-15.5) TV99F 11/07/2011			IT-MW-9(2-3.5) TU65P 10/31/2011			IT-MW-9(5-6.5) TU65C 10/31/2011			IT-MW-9(8-9.5) TV85C 11/04/2011			IT-MW-9(13-14.5) TV85D 11/04/2011		
		Result	Reporting Limit	Detection Limit	Result	Reporting Limit	Detection Limit	Result	Reporting Limit	Detection Limit	Result	Reporting Limit	Detection Limit	Result	Reporting Limit	Detection Limit
VOLATILES (µg/kg)																
Method SW8260C																
Chloromethane	1,600	1.4 U	1.4	0.36	1.2 U	1.2	0.32	1.1 U	1.1	0.30	1.2 U	1.2	0.32	1.1 U	1.1	0.30
Bromomethane	---	1.4 UJ	1.4	0.26	1.2 U	1.2	0.23	1.1 U	1.1	0.21	1.2 U	1.2	0.23	1.1 U	1.1	0.21
Vinyl Chloride	7.4	1.4 U	1.4	0.32	1.2 U	1.2	0.29	1.1 U	1.1	0.27	1.2 U	1.2	0.29	1.1 U	1.1	0.27
Chloroethane	280,000	1.4 U	1.4	0.63	1.2 U	1.2	0.56	1.1 U	1.1	0.53	1.2 U	1.2	0.56	1.1 U	1.1	0.52
Methylene Chloride	2400	**2.5** J1	2.7	0.87	**2.4** J, J1	2.4	0.77	**3.1** J	2.3	0.73	**10** J	2.4	0.78	**2.1** J	2.3	0.72
Acetone	510,000	**41**	6.8	0.66	**50**	6.1	0.58	**55**	5.7	0.55	**34**	6.1	0.59	11 U	5.7	0.55
Carbon Disulfide	75,000	1.4 U	1.4	0.76	**1.8**	1.2	0.68	**1.7**	1.1	0.64	1.2 U	1.2	0.68	1.1 U	1.1	0.64
1,1-Dichloroethene	81	1.4 U	1.4	0.46	1.2 U	1.2	0.41	1.1 U	1.1	0.39	1.2 U	1.2	0.41	1.1 U	1.1	0.38
1,1-Dichloroethane	710	1.4 U	1.4	0.28	1.2 U	1.2	0.25	1.1 U	1.1	0.23	1.2 UJ	1.2	0.25	1.1 UJ	1.1	0.23
trans-1,2-Dichloroethene	19,000	1.4 U	1.4	0.36	1.2 U	1.2	0.32	1.1 U	1.1	0.31	1.2 U	1.2	0.33	1.1 U	1.1	0.30
cis-1,2-Dichloroethene	2,600	1.4 U	1.4	0.33	1.2 U	1.2	0.29	1.1 U	1.1	0.28	1.2 U	1.2	0.29	1.1 U	1.1	0.27
Chloroform	200	1.4 U	1.4	0.32	1.2 U	1.2	0.28	1.1 U	1.1	0.27	1.2 U	1.2	0.29	1.1 U	1.1	0.27
1,2-Dichloroethane	70	1.4 U	1.4	0.26	1.2 U	1.2	0.23	1.1 U	1.1	0.22	1.2 U	1.2	0.23	1.1 U	1.1	0.22
2-Butanone	430,000	6.8 U	6.8	0.70	**7.1**	6.1	0.62	**5.9**	5.7	0.59	6.1 UJ	6.1	0.63	5.7 UJ	5.7	0.58
1,1,1-Trichloroethane	1,900,000	1.4 U	1.4	0.31	1.2 U	1.2	0.27	1.1 U	1.1	0.26	1.2 U	1.2	0.28	1.1 U	1.1	0.26
Carbon Tetrachloride	21	1.4 U	1.4	0.29	1.2 U	1.2	0.26	1.1 U	1.1	0.24	1.2 U	1.2	0.26	1.1 U	1.1	0.24
Vinyl Acetate	---	6.8 U	6.8	0.52	6.1 U	6.1	0.46	5.7 U	5.7	0.44	6.1 U	6.1	0.47	5.7 U	5.7	0.43
Bromodichloromethane	89	1.4 U	1.4	0.35	1.2 U	1.2	0.31	1.1 U	1.1	0.29	1.2 U	1.2	0.31	1.1 U	1.1	0.29
1,2-Dichloropropane	92	1.4 U	1.4	0.22	1.2 U	1.2	0.20	1.1 U	1.1	0.19	1.2 U	1.2	0.20	1.1 U	1.1	0.18
cis-1,3-Dichloropropene	---	1.4 U	1.4	0.31	1.2 U	1.2	0.27	1.1 U	1.1	0.26	1.2 U	1.2	0.28	1.1 U	1.1	0.26
Trichloroethene	51	1.4 U	1.4	0.29	1.2 U	1.2	0.26	1.1 U	1.1	0.24	1.2 U	1.2	0.26	1.1 U	1.1	0.24
Dibromochloromethane	---	1.4 U	1.4	0.36	1.2 U	1.2	0.32	1.1 U	1.1	0.31	1.2 U	1.2	0.33	1.1 U	1.1	0.30
1,1,2-Trichloroethane	73	1.4 U	1.4	0.39	1.2 U	1.2	0.35	1.1 U	1.1	0.33	1.2 U	1.2	0.35	1.1 U	1.1	0.32
Benzene	93	1.4 U	1.4	0.40	**0.9** J1	1.2	0.36	1.1 U	1.1	0.34	1.2 U	1.2	0.36	1.1 U	1.1	0.34
trans-1,3-Dichloropropene	---	1.4 U	1.4	0.30	1.2 U	1.2	0.26	1.1 U	1.1	0.25	1.2 U	1.2	0.26	1.1 U	1.1	0.25
2-Chloroethylvinylether	---	6.8 U	6.8	0.38	6.1 U	6.1	0.33	5.7 U	5.7	0.32	6.1 U	6.1	0.34	5.7 U	5.7	0.31
Bromoform	---	1.4 U	1.4	0.41	1.2 U	1.2	0.36	1.1 U	1.1	0.34	1.2 U	1.2	0.36	1.1 U	1.1	0.34
4-Methyl-2-Pentanone (MIBK)	170,000	6.8 U	6.8	0.57	6.1 U	6.1	0.51	5.7 U	5.7	0.48	6.1 U	6.1	0.51	5.7 U	5.7	0.48
2-Hexanone	32,000	6.8 U	6.8	0.60	6.1 U	6.1	0.53	5.7 U	5.7	0.50	6.1 U	6.1	0.54	5.7 U	5.7	0.50
Tetrachloroethene	260	1.4 U	1.4	0.35	1.2 U	1.2	0.31	1.1 U	1.1	0.29	1.2 U	1.2	0.31	1.1 U	1.1	0.29
1,1,2,2-Tetrachloroethane	13	1.4 U	1.4	0.35	1.2 U	1.2	0.31	1.1 U	1.1	0.29	1.2 U	1.2	0.31	1.1 U	1.1	0.29
Toluene	100,000	1.4 U	1.4	0.21	1.2 U	1.2	0.18	1.1 U	1.1	0.17	1.2 U	1.2	0.18	1.1 U	1.1	0.17
Chlorobenzene	26,000	1.4 U	1.4	0.30	1.2 U	1.2	0.27	1.1 U	1.1	0.25	1.2 U	1.2	0.27	1.1 U	1.1	0.25
Ethylbenzene	230	1.4 U	1.4	0.28	1.2 U	1.2	0.25	1.1 U	1.1	0.23	1.2 U	1.2	0.25	1.1 U	1.1	0.23
Styrene	16,000,000	1.4 U	1.4	0.19	1.2 U	1.2	0.17	1.1 U	1.1	0.16	1.2 U	1.2	0.17	1.1 U	1.1	0.16
Trichlorofluoromethane	200,000	1.4 U	1.4	0.36	1.2 U	1.2	0.32	1.1 U	1.1	0.31	1.2 U	1.2	0.33	1.1 U	1.1	0.30
1,1,2-Trichloro-1,2,2-trifuoroethane	1,000,000,000	2.7 U	2.7	0.39	2.4 U	2.4	0.35	2.3 U	2.3	0.33	2.4 U	2.4	0.35	2.3 U	2.3	0.33
m,p-Xylene	160,000	1.4 U	1.4	0.54	1.2 U	1.2	0.48	1.1 U	1.1	0.45	1.2 U	1.2	0.48	1.1 U	1.1	0.45
o-Xylene	200,000	1.4 U	1.4	0.31	1.2 U	1.2	0.27	1.1 U	1.1	0.26	1.2 U	1.2	0.27	1.1 U	1.1	0.25
1,2-Dichlorobenzene	68,000	1.4 U	1.4	0.40	1.2 U	1.2	0.36	1.1 U	1.1	0.34	1.2 U	1.2	0.36	1.1 U	1.1	0.33
1,3-Dichlorobenzene	3,840	1.4 U	1.4	0.31	1.2 U	1.2	0.28	1.1 U	1.1	0.26	1.2 U	1.2	0.28	1.1 U	1.1	0.26
1,4-Dichlorobenzene	3,500	1.4 U	1.4	0.32	1.2 U	1.2	0.28	1.1 U	1.1	0.27	1.2 U	1.2	0.28	1.1 U	1.1	0.26
Acrolein	---	68 U	68	5.2	61 U	61	4.6	57 U	57	4.4	61 UJ	61	4.7	57 UJ	57	4.3
Methyl Iodide	---	**0.7** J1	1.4	0.29	1.2 U	1.2	0.26	1.1 U	1.1	0.25	1.2 U	1.2	0.26	1.1 U	1.1	0.24
Bromoethane	---	2.7 U	2.7	0.60	2.4 U	2.4	0.53	2.3 U	2.3	0.50	2.4 U	2.4	0.54	2.3 U	2.3	0.50
Acrylonitrile	---	6.8 U	6.8	1.4	6.1 U	6.1	1.2	5.7 U	5.7	1.2	6.1 U	6.1	1.3	5.7 U	5.7	1.2
1,1-Dichloropropene	---	1.4 U	1.4	0.43	1.2 U	1.2	0.38	1.1 U	1.1	0.36	1.2 U	1.2	0.38	1.1 U	1.1	0.35
Dibromomethane	---	1.4 U	1.4	0.20	1.2 U	1.2	0.18	1.1 U	1.1	0.17	1.2 U	1.2	0.18	1.1 U	1.1	0.17
1,1,1,2-Tetrachloroethane	---	1.4 U	1.4	0.32	1.2 U	1.2	0.28	1.1 U	1.1	0.27	1.2 U	1.2	0.28	1.1 U	1.1	0.26
1,2-Dibromo-3-chloropropane	---	6.8 U	6.8	0.80	6.1 U	6.1	0.71	5.7 U	5.7	0.67	6.1 U	6.1	0.72	5.7 U	5.7	0.67
1,2,3-Trichloropropane	---	2.7 U	2.7	0.71	2.4 U	2.4	0.63	2.3 U	2.3	0.59	2.4 U	2.4	0.63	2.3 U	2.3	0.59
trans-1,4-Dichloro-2-butene	---	6.8 U	6.8	0.60	6.1 U	6.1	0.53	5.7 U	5.7	0.50	6.1 U	6.1	0.53	5.7 U	5.7	0.50
1,3,5-Trimethylbenzene	800,000	1.4 U	1.4	0.35	1.2 U	1.2	0.31	1.1 U	1.1	0.29	1.2 U	1.2	0.31	1.1 U	1.1	0.29
1,2,4-Trimethylbenzene	800,000	1.4 U	1.4	0.31	1.2 U	1.2	0.28	1.1 U	1.1	0.26	1.2 U	1.2	0.28	1.1 U	1.1	0.26
Hexachlorobutadiene	---	6.8 U	6.8	0.56	6.1 U	6.1	0.50	5.7 U	5.7	0.47	6.1 U	6.1	0.50	5.7 U	5.7	0.47

TABLE M-3
MONITORING WELL BORINGS SOIL ANALYTICAL RESULTS
BOEING ISAACSON-THOMPSON
REMEDIAL INVESTIGATION

	Preliminary Cleanup Level	IT-MW-8(14-15.5) TV99F 11/07/2011			IT-MW-9(2-3.5) TU65P 10/31/2011			IT-MW-9(5-6.5) TU65C 10/31/2011			IT-MW-9(8-9.5) TV85C 11/04/2011			IT-MW-9(13-14.5) TV85D 11/04/2011		
		Result	Reporting Limit	Detection Limit	Result	Reporting Limit	Detection Limit	Result	Reporting Limit	Detection Limit	Result	Reporting Limit	Detection Limit	Result	Reporting Limit	Detection Limit
Ethylene Dibromide	---	1.4 U	1.4	0.24	1.2 U	1.2	0.21	1.1 U	1.1	0.20	1.2 U	1.2	0.22	1.1 U	1.1	0.20
Bromochloromethane	---	1.4 U	1.4	0.44	1.2 U	1.2	0.39	1.1 U	1.1	0.37	1.2 U	1.2	0.39	1.1 U	1.1	0.37
2,2-Dichloropropane	---	1.4 U	1.4	0.40	1.2 U	1.2	0.35	1.1 U	1.1	0.33	1.2 U	1.2	0.36	1.1 U	1.1	0.33
1,3-Dichloropropane	---	1.4 U	1.4	0.29	1.2 U	1.2	0.25	1.1 U	1.1	0.24	1.2 U	1.2	0.26	1.1 U	1.1	0.24
Isopropylbenzene	78,000	1.4 U	1.4	0.32	1.2 U	1.2	0.28	1.1 U	1.1	0.27	1.2 U	1.2	0.28	1.1 U	1.1	0.26
n-Propylbenzene	11,000	1.4 U	1.4	0.37	1.2 U	1.2	0.33	1.1 U	1.1	0.31	1.2 U	1.2	0.33	1.1 U	1.1	0.31
Bromobenzene	---	1.4 U	1.4	0.21	1.2 U	1.2	0.19	1.1 U	1.1	0.18	1.2 U	1.2	0.19	1.1 U	1.1	0.17
2-Chlorotoluene	---	1.4 U	1.4	0.41	1.2 U	1.2	0.36	1.1 U	1.1	0.34	1.2 U	1.2	0.37	1.1 U	1.1	0.34
4-Chlorotoluene	400,000	1.4 U	1.4	0.38	1.2 U	1.2	0.34	1.1 U	1.1	0.32	1.2 U	1.2	0.34	1.1 U	1.1	0.31
tert-Butylbenzene	---	1.4 U	1.4	0.42	1.2 U	1.2	0.37	1.1 U	1.1	0.35	1.2 U	1.2	0.37	1.1 U	1.1	0.35
sec-Butylbenzene	---	1.4 U	1.4	0.33	1.2 U	1.2	0.29	1.1 U	1.1	0.28	1.2 U	1.2	0.29	1.1 U	1.1	0.27
4-Isopropyltoluene	---	1.4 U	1.4	0.32	1.2 U	1.2	0.29	1.1 U	1.1	0.27	1.2 U	1.2	0.29	1.1 U	1.1	0.27
n-Butylbenzene	27,000	1.4 U	1.4	0.36	1.2 U	1.2	0.32	1.1 U	1.1	0.30	1.2 U	1.2	0.32	1.1 U	1.1	0.30
1,2,4-Trichlorobenzene	80	6.8 U	6.8	0.45	6.1 U	6.1	0.40	5.7 U	5.7	0.38	6.1 U	6.1	0.41	5.7 U	5.7	0.38
Naphthalene	2,100	6.8 U	6.8	0.59	**10**	6.1	0.52	**1.9** J1	5.7	0.49	6.1 U	6.1	0.52	5.7 U	5.7	0.49
1,2,3-Trichlorobenzene	---	6.8 U	6.8	0.42	6.1 U	6.1	0.37	5.7 U	5.7	0.35	6.1 U	6.1	0.37	5.7 U	5.7	0.35
SEMIVOLATILES (µg/kg)																
Method SW8270D																
Phenol	1,900,000	20 U	20	8.6	18 U	18	7.8	19 U	19	8.2	18 U	18	8.0	18 U	18	8.0
Bis-(2-Chloroethyl) Ether	---	20 U	20	3.3	18 U	18	3.0	19 U	19	3.2	18 U	18	3.1	18 U	18	3.1
2-Chlorophenol	---	20 U	20	2.4	18 U	18	2.2	19 U	19	2.3	18 U	18	2.2	18 U	18	2.2
1,3-Dichlorobenzene	3,840	20 U	20	2.6	18 U	18	2.4	19 U	19	2.5	18 U	18	2.4	18 U	18	2.4
1,4-Dichlorobenzene	3,500	20 U	20	2.8	18 U	18	2.6	19 U	19	2.7	18 U	18	2.6	18 U	18	2.6
Benzyl Alcohol	8,000,000	20 U	20	6.0	18 U	18	5.5	19 U	19	5.7	18 U	18	5.6	18 U	18	5.6
1,2-Dichlorobenzene	68,000	20 U	20	2.5	18 U	18	2.3	19 U	19	2.4	18 U	18	2.3	18 U	18	2.3
2-Methylphenol	250,000	20 U	20	5.2	18 U	18	4.7	19 U	19	5.0	18 U	18	4.8	18 U	18	4.9
2,2'-Oxybis(1-Chloropropane)	---	20 U	20	3.7	18 U	18	3.4	19 U	19	3.5	18 U	18	3.5	18 U	18	3.5
4-Methylphenol	41,000	40 U	40	6.6	36 U	36	6.0	38 U	38	6.3	37 U	37	6.1	37 U	37	6.1
N-Nitroso-Di-N-Propylamine	---	20 U	20	3.3	18 U	18	3.0	19 U	19	3.2	18 U	18	3.1	18 U	18	3.1
Hexachloroethane	---	20 U	20	2.9	18 U	18	2.7	19 U	19	2.8	18 U	18	2.7	18 U	18	2.7
Nitrobenzene	---	20 U	20	4.0	18 U	18	3.7	19 U	19	3.8	18 U	18	3.7	18 U	18	3.8
Isophorone	---	20 U	20	2.8	18 U	18	2.6	19 U	19	2.7	18 U	18	2.6	18 U	18	2.6
2-Nitrophenol	---	99 U	99	38	90 U	90	35	94 U	94	37	92 U	92	36	92 U	92	36
2,4-Dimethylphenol	95,000	40 U	40	3.4	36 U	36	3.1	38 U	38	3.3	37 U	37	3.2	37 U	37	3.2
Benzoic Acid	9,000	400 U	400	100	360 U	360	91	380 U	380	95	370 U	370	93	370 U	370	93
bis(2-Chloroethoxy) Methane	---	20 U	20	2.0	18 U	18	1.8	19 U	19	1.9	18 U	18	1.8	18 U	18	1.8
2,4-Dichlorophenol	---	200 U	200	21	180 U	180	19	190 U	190	20	180 U	180	20	180 U	180	20
1,2,4-Trichlorobenzene	80	20 U	20	3.5	18 U	18	3.1	19 U	19	3.3	18 U	18	3.2	18 U	18	3.2
Naphthalene	2,100	20 U	20	2.7	**47**	18	2.5	**26**	19	2.6	**18** J1	18	2.5	18 U	18	2.6
4-Chloroaniline	---	270 U	270	22	240 U	240	20	260 U	260	21	250 U	250	21	250 U	250	21
Hexachlorobutadiene	---	99 U	99	4.5	90 U	90	4.1	94 U	94	4.3	92 U	92	4.2	92 U	92	4.2
4-Chloro-3-methylphenol	740,000	99 U	99	15	90 U	90	14	94 U	94	14	92 U	92	14	92 U	92	14
2-Methylnaphthalene	320,000	20 U	20	3.0	**55**	18	2.8	**13** J1	19	2.9	**16** J1	18	2.8	18 U	18	2.8
Hexachlorocyclopentadiene	---	400 U	400	66	360 UJ	360	60	380 UJ	380	63	370 U	370	61	370 U	370	61
2,4,6-Trichlorophenol	---	99 U	99	22	90 U	90	20	94 U	94	21	92 U	92	21	92 U	92	21
2,4,5-Trichlorophenol	---	99 U	99	21	90 U	90	19	94 U	94	20	92 U	92	20	92 U	92	20
2-Chloronaphthalene	---	20 U	20	2.6	18 U	18	2.4	19 U	19	2.5	18 U	18	2.4	18 U	18	2.4
2-Nitroaniline	---	99 U	99	18	90 U	90	17	94 U	94	17	92 U	92	17	92 U	92	17
Dimethylphthalate	71	20 U	20	2.9	18 U	18	2.6	19 U	19	2.7	18 U	18	2.7	18 U	18	2.7
Acenaphthylene	---	20 U	20	5.7	18 U	18	5.1	19 U	19	5.4	18 U	18	5.3	18 U	18	5.3
3-Nitroaniline	---	99 U	99	22	90 U	90	20	94 U	94	21	92 U	92	21	92 U	92	21
Acenaphthene	230,000	20 U	20	3.3	**90**	18	3.0	**200**	19	3.1	**13** J1	18	3.0	18 U	18	3.0
2,4-Dinitrophenol	---	840 U	840	110	770 U	770	100	800 U	800	100	780 U	780	100	790 U	790	100
4-Nitrophenol	---	99 U	99	34	90 UJ	90	31	94 UJ	94	33	92 U	92	32	92 U	92	32
Dibenzofuran	80,000	20 U	20	4.1	**52**	18	3.7	**260**	19	3.9	**16** J1	18	3.8	18 U	18	3.8
2,6-Dinitrotoluene	---	99 U	99	30	90 U	90	28	94 U	94	29	92 U	92	28	92 U	92	28

TABLE M-3
MONITORING WELL BORINGS SOIL ANALYTICAL RESULTS
BOEING ISAACSON-THOMPSON
REMEDIAL INVESTIGATION

	Preliminary Cleanup Level	IT-MW-8(14-15.5) TV99F 11/07/2011			IT-MW-9(2-3.5) TU65P 10/31/2011			IT-MW-9(5-6.5) TU65C 10/31/2011			IT-MW-9(8-9.5) TV85C 11/04/2011			IT-MW-9(13-14.5) TV85D 11/04/2011		
		Result	Reporting Limit	Detection Limit	Result	Reporting Limit	Detection Limit	Result	Reporting Limit	Detection Limit	Result	Reporting Limit	Detection Limit	Result	Reporting Limit	Detection Limit
2,4-Dinitrotoluene	---	99 U	99	19	90 U	90	18	94 U	94	18	92 U	92	18	92 U	92	18
Diethylphthalate	178,000	50 U	50	36	45 U	45	33	47 U	47	35	46 U	46	34	46 U	46	34
4-Chlorophenyl-phenylether	---	20 U	20	5.3	18 U	18	4.8	19 U	19	5.0	18 U	18	4.9	18 U	18	4.9
Fluorene	150,000	20 U	20	4.3	**73**	18	3.9	**300**	19	4.1	18 U	18	4.0	18 U	18	4.0
4-Nitroaniline	---	99 U	99	38	90 U	90	34	94 U	94	36	92 U	92	35	92 U	92	35
4,6-Dinitro-2-Methylphenol	---	200 U	200	21	180 U	180	19	190 U	190	20	180 U	180	20	180 U	180	20
N-Nitrosodiphenylamine	204,000	20 U	20	5.4	18 U	18	4.9	19 U	19	5.1	18 U	18	5.0	18 U	18	5.0
4-Bromophenyl-phenylether	---	20 U	20	5.0	18 U	18	4.5	19 U	19	4.7	18 U	18	4.6	18 U	18	4.6
Hexachlorobenzene	---	20 U	20	4.3	18 U	18	3.9	19 U	19	4.0	18 U	18	4.0	18 U	18	4.0
Pentachlorophenol	---	200 U	200	48	180 UJ	180	44	190 UJ	190	46	180 U	180	45	180 U	180	45
Phenanthrene	---	20 U	20	3.6	**200**	18	3.3	**830**	19	3.4	**52**	18	3.4	18 U	18	3.4
Carbazole	50,000	20 U	20	2.7	**13** J1	18	2.4	**86**	19	2.5	18 U	18	2.5	18 U	18	2.5
Anthracene	1,600,000	20 U	20	4.5	**22**	18	4.1	**190**	19	4.2	**11** J1	18	4.2	18 U	18	4.2
Di-n-Butylphthalate	26,000	20 U	20	8.1	18 U	18	7.4	**11** J1	19	7.7	18 U	18	7.5	18 U	18	7.5
Fluoranthene	230,000	20 U	20	2.9	**93**	18	2.6	**340**	19	2.7	**24**	18	2.7	18 U	18	2.7
Pyrene	240,000	20 U	20	1.9	**70**	18	1.7	**300**	19	1.8	**33** J	18	1.8	18 U	18	1.8
Butylbenzylphthalate	1,700	20 U	20	6.1	18 U	18	5.5	**16** J1	19	5.8	18 U	18	5.7	18 U	18	5.7
3,3'-Dichlorobenzidine	---	150 UJ	150	18	140 UJ	140	16	140 UJ	140	17	140 U	140	16	140 U	140	16
Benzo(a)anthracene	---	20 U	20	3.3	**16** J1	18	3.0	**69**	19	3.1	**9.2** J1	18	3.0	18 U	18	3.0
bis(2-Ethylhexyl)phthalate	56,600	22 UJ2	25	14	18 UJ2	22	13	29 U	24	14	40 U	23	13	22 UJ2	23	13
Chrysene	---	20 U	20	3.7	**20**	18	3.4	**69**	19	3.5	**26**	18	3.5	18 U	18	3.5
Di-n-Octyl phthalate	---	20 U	20	5.8	18 U	18	5.3	19 U	19	5.5	18 U	18	5.4	18 U	18	5.4
Benzo(a)pyrene	---	20 U	20	5.4	18 U	18	4.9	**65**	19	5.1	**9.2** J1	18	5.0	18 U	18	5.0
Indeno(1,2,3-cd)pyrene	---	20 U	20	4.6	18 U	18	4.2	**32**	19	4.4	18 U	18	4.3	18 U	18	4.3
Dibenz(a,h)anthracene	---	20 U	20	4.3	18 U	18	3.9	**14** J1	19	4.1	18 U	18	4.0	18 U	18	4.0
Benzo(g,h,i)perylene	---	20 U	20	4.4	18 U	18	4.0	**49**	19	4.2	18 U	18	4.1	18 U	18	4.1
1-Methylnaphthalene	16,000	20 U	20	2.7	**32**	18	2.4	**14** J1	19	2.5	**15** J1	18	2.5	18 U	18	2.5
Total Benzofluoranthenes	---	20 U	20	2.7	**14** J1	18	2.5	**100**	19	2.6	**17** J1	18	2.5	18 U	18	2.5
cPAH TEQ	15	ND	NA	NA	**3.2** J	NA	NA	**87** J	NA	NA	**12** J	NA	NA	ND	NA	NA
PAHs (µg/kg)																
Method SW8270D-SIM																
Naphthalene	2,100	**3.0** J1	5.0	2.6	**43**	4.6	2.4	**18**	4.7	2.5	**40**	4.6	2.4	**3.2** J1	4.6	2.4
2-Methylnaphthalene	320,000	**3.0** J1	5.0	1.5	**54**	4.6	1.4	**14**	4.7	1.4	**35**	4.6	1.4	**3.9** J1	4.6	1.4
1-Methylnaphthalene	16,000	**3.6** J1	5.0	1.7	**32**	4.6	1.6	**15**	4.7	1.6	**35**	4.6	1.6	**2.4** J1	4.6	1.6
Total Naphthalenes	---	**9.6** J1	NA	NA	**129**	NA	NA	**47**	NA	NA	**110**	NA	NA	**9.5** J1	NA	NA
Acenaphthylene	---	5.0 U	5.0	1.3	**2.6** J1	4.6	1.2	**5.1**	4.7	1.2	4.6 U	4.6	1.1	4.6 U	4.6	1.2
Acenaphthene	230,000	5.0 U	5.0	1.3	**110**	4.6	1.2	**210**	4.7	1.2	**29**	4.6	1.2	4.6 U	4.6	1.2
Fluorene	150,000	5.0 U	5.0	1.3	**86**	4.6	1.2	**350**	4.7	1.2	**17**	4.6	1.2	4.6 U	4.6	1.2
Phenanthrene	---	**5.5**	5.0	2.0	**200**	4.6	1.8	**1200**	24	9.3	**76**	4.6	1.8	**7.2**	4.6	1.8
Anthracene	1,600,000	5.0 U	5.0	1.5	**22**	4.6	1.4	**300**	4.7	1.4	**15**	4.6	1.3	4.6 U	4.6	1.3
Fluoranthene	230,000	5.0 U	5.0	1.8	**96**	4.6	1.6	**630**	24	8.3	**35**	4.6	1.6	**3.5** J1	4.6	1.6
Pyrene	240,000	5.0 U	5.0	2.2	**65**	4.6	2.1	**390**	4.7	2.1	**28**	4.6	2.0	3.5 U	4.6	2.0
Benzo(a)anthracene	---	5.0 U	5.0	1.6	**18**	4.6	1.5	**100**	4.7	1.5	**12**	4.6	1.5	4.6 U	4.6	1.5
Chrysene	---	5.0 U	5.0	1.9	**21**	4.6	1.7	**99**	4.7	1.8	**30**	4.6	1.7	**2.3** J1	4.6	1.7
Benzo(a)pyrene	---	5.0 U	5.0	1.7	**9.4**	4.6	1.6	**80**	4.7	1.7	**8.9**	4.6	1.6	**3.3** J1	4.6	1.6
Indeno(1,2,3-cd)pyrene	---	5.0 U	5.0	3.4	**3.8** J1	4.6	3.2	**49**	4.7	3.3	**3.3** J1	4.6	3.2	4.6 U	4.6	3.2
Dibenz(a,h)anthracene	---	5.0 U	5.0	2.4	4.6 U	4.6	2.2	**19**	4.7	2.2	**4.6**	4.6	2.2	4.6 U	4.6	2.2
Benzo(g,h,i)perylene	---	5.0 U	5.0	3.0	**6.6**	4.6	2.8	**64**	4.7	2.9	**8.8**	4.6	2.8	4.6 U	4.6	2.8
Dibenzofuran	80,000	5.0 U	5.0	1.5	**59**	4.6	1.4	**270**	4.7	1.4	**22**	4.6	1.4	4.6 U	4.6	1.4
Total Benzofluoranthenes	---	5.0 U	5.0	1.8	**18**	4.6	1.7	**130**	4.7	1.7	**17**	4.6	1.7	4.6 U	4.6	1.7
cPAH TEQ	15	ND	NA	NA	**14** J	NA	NA	**111**	NA	NA	**13** J	NA	NA	**3.3** J	NA	NA

TABLE M-3
MONITORING WELL BORINGS SOIL ANALYTICAL RESULTS
BOEING ISAACSON-THOMPSON
REMEDIAL INVESTIGATION

	Preliminary Cleanup Level	IT-MW-8(14-15.5) TV99F 11/07/2011			IT-MW-9(2-3.5) TU65P 10/31/2011			IT-MW-9(5-6.5) TU65C 10/31/2011			IT-MW-9(8-9.5) TV85C 11/04/2011			IT-MW-9(13-14.5) TV85D 11/04/2011		
		Result	Reporting Limit	Detection Limit	Result	Reporting Limit	Detection Limit	Result	Reporting Limit	Detection Limit	Result	Reporting Limit	Detection Limit	Result	Reporting Limit	Detection Limit
PCBs (µg/kg)																
Method SW8082																
Aroclor 1016	0.72	32 U	32	1.9	32 U	32	1.9	32 U	32	2.0	32 U	32	2.0	32 U	32	1.9
Aroclor 1242	0.72	32 U	32	2.3	32 U	32	2.3	32 U	32	2.4	32 U	32	2.4	32 U	32	2.4
Aroclor 1248	220	32 U	32	2.3	32 U	32	2.3	32 U	32	2.4	32 U	32	2.4	32 U	32	2.4
Aroclor 1254	0.29	32 U	32	2.3	32 U	32	2.3	32 U	32	2.4	32 U	32	2.4	32 U	32	2.4
Aroclor 1260	5.4	32 U	32	2.3	32 U	32	2.3	32 U	32	2.4	32 U	32	2.4	32 U	32	2.4
Aroclor 1221	---	32 U	32	2.3	32 U	32	2.3	32 U	32	2.4	32 U	32	2.4	32 U	32	2.4
Aroclor 1232	---	32 U	32	2.3	32 U	32	2.3	32 U	32	2.4	32 U	32	2.4	32 U	32	2.4
Total PCBs	1.8	ND	NA	NA	ND	NA	NA	ND	NA	NA	ND	NA	NA	ND	NA	NA
TOTAL PETROLEUM HYDROCARBONS (mg/kg)																
NWTPH-Dx																
Diesel-Range Organics	2,000	6.0 U	6.0	1.5	**9.4**	5.6	1.4	**18**	5.5	1.4	**12**	5.7	1.5	5.5 U	5.5	1.4
Motor Oil-Range Organics	2,000	12 U	12	1.9	**15**	11	1.7	**77**	11	1.7	**43**	11	1.8	11 U	11	1.7
NWTPH-G																
Gasoline-Range Organics	100/30	8.3 U	8.3	4.0	5.7 U	5.7	2.7	6.4 U	6.4	3.1	6.7 U	6.7	3.2	6.8 U	6.8	3.2
TOTAL METALS (mg/kg)																
Methods 200.8/7471A/SW7196A																
Antimony	5	0.3 U	0.3	0.017	0.2 U	0.2	0.015	0.2 U	0.2	0.014	0.2 U	0.2	0.015	0.2 U	0.2	0.015
Arsenic	7	**2.0**	0.3	0.11	**2.5**	0.2	0.097	**6.2**	0.2	0.095	**11.1**	0.2	0.10	**2.5**	0.2	0.099
Barium	640	**36.6**	0.6	0.072	**38.7**	0.6	0.063	**46.1**	0.5	0.061	**50.8**	0.6	0.067	**26.3**	0.6	0.064
Beryllium	160	0.3 U	0.3	0.023	0.2 U	0.2	0.020	**0.2**	0.2	0.020	0.2 U	0.2	0.021	0.2 U	0.2	0.020
Cadmium	1.3	0.1 U	0.1	0.015	0.1 U	0.1	0.013	**0.5**	0.1	0.013	**0.2**	0.1	0.014	0.1 U	0.1	0.014
Chromium	1,480	**13.9**	0.6	0.049	**21.1**	0.6	0.043	**13.2**	0.5	0.041	**13.7**	0.6	0.045	**10.6**	0.6	0.043
Chromium VI	3.8	0.524 U	0.524	0.030	0.453 U	0.453	0.030	0.448 U	0.448	0.030	0.467 U	0.467	0.030	0.482 U	0.482	0.030
Copper	36	**14.9**	0.6	0.046	**14.0**	0.6	0.040	**54.2**	0.5	0.039	**17.9**	0.6	0.043	**14.3**	0.6	0.041
Lead	250	**1.8**	0.1	0.060	**3.7**	0.1	0.053	**14.7**	0.1	0.051	**5.3**	0.1	0.056	**4.8**	0.1	0.053
Mercury	1.5	0.02 U	0.02	0.0013	0.03 U	0.03	0.0014	**0.03**	0.02	0.0010	**0.04**	0.03	0.0013	0.03 U	0.03	0.0013
Nickel	210	**8.6**	0.6	0.063	**31.7**	0.6	0.055	**18.1**	0.5	0.053	**14.6**	0.6	0.058	**9.6**	0.6	0.056
Selenium	1.0	0.6 U	0.6	0.13	0.6 U	0.6	0.11	0.5 U	0.5	0.11	0.6 U	0.6	0.12	0.6 U	0.6	0.11
Silver	170	0.3 U	0.3	0.010	0.2 U	0.2	0.0090	0.2 U	0.2	0.0087	0.2 U	0.2	0.0095	0.2 U	0.2	0.0091
Thallium	0.67	0.3 U	0.3	0.0038	0.2 U	0.2	0.0034	0.2 U	0.2	0.0033	0.2 U	0.2	0.0036	0.2 U	0.2	0.0034
Zinc	1,400	**27**	5	0.43	**33**	4	0.38	**63**	4	0.37	**56**	5	0.40	**35**	5	0.39

TABLE M-3
MONITORING WELL BORINGS SOIL ANALYTICAL RESULTS
BOEING ISAACSON-THOMPSON
REMEDIAL INVESTIGATION

	Preliminary Cleanup Level	IT-MW-10(2-3.5) TU65D 10/31/2011			IT-MW-10(5-6.5) TU65E 10/31/2011			IT-MW-10(8-9.5) TV99G 11/07/2011			IT-MW-10(13.5-15) TV99H 11/07/2011			IT-MW-11(2-3.5) TU65F 10/31/2011		
		Result	Reporting Limit	Detection Limit	Result	Reporting Limit	Detection Limit	Result	Reporting Limit	Detection Limit	Result	Reporting Limit	Detection Limit	Result	Reporting Limit	Detection Limit
VOLATILES (µg/kg)																
Method SW8260C																
Chloromethane	1,600	1.3 U	1.3	0.33	1.1 U	1.1	0.30	1.2 U	1.2	0.32	1.3 U	1.3	0.35	1.0 U	1.0	0.25
Bromomethane	---	1.3 U	1.3	0.24	1.1 U	1.1	0.21	1.2 UJ	1.2	0.23	1.3 UJ	1.3	0.25	1.0 U	1.0	0.18
Vinyl Chloride	7.4	1.3 U	1.3	0.30	1.1 U	1.1	0.27	1.2 U	1.2	0.29	1.3 U	1.3	0.31	1.0 U	1.0	0.22
Chloroethane	280,000	1.3 U	1.3	0.58	1.1 U	1.1	0.53	1.2 U	1.2	0.57	1.3 U	1.3	0.62	1.0 U	1.0	0.44
Methylene Chloride	2400	**2.7** J	2.5	0.80	**3.5** J	2.3	0.73	**2.3** J1	2.5	0.78	**2.9**	2.7	0.85	**2.0** J	1.9	0.60
Acetone	510,000	**50**	6.3	0.61	7.1 U	5.7	0.55	**7.7**	6.1	0.59	**64**	6.7	0.64	31 U	4.8	0.46
Carbon Disulfide	75,000	**1.2** J1	1.3	0.71	1.1 U	1.1	0.64	1.2 U	1.2	0.69	1.3 U	1.3	0.75	**0.5** J1	1.0	0.53
1,1-Dichloroethene	81	1.3 U	1.3	0.42	1.1 U	1.1	0.39	1.2 U	1.2	0.41	1.3 U	1.3	0.45	1.0 U	1.0	0.32
1,1-Dichloroethane	710	1.3 U	1.3	0.26	1.1 U	1.1	0.23	1.2 U	1.2	0.25	1.3 U	1.3	0.27	**0.6** J1	1.0	0.19
trans-1,2-Dichloroethene	19,000	1.3 U	1.3	0.34	1.1 U	1.1	0.31	1.2 U	1.2	0.33	1.3 U	1.3	0.36	1.0 U	1.0	0.25
cis-1,2-Dichloroethene	2,600	1.3 U	1.3	0.30	1.1 U	1.1	0.28	1.2 U	1.2	0.29	1.3 U	1.3	0.32	1.0 U	1.0	0.23
Chloroform	200	1.3 U	1.3	0.30	1.1 U	1.1	0.27	1.2 U	1.2	0.29	1.3 U	1.3	0.31	1.0 U	1.0	0.22
1,2-Dichloroethane	70	1.3 U	1.3	0.24	1.1 U	1.1	0.22	1.2 U	1.2	0.23	1.3 U	1.3	0.26	1.0 U	1.0	0.18
2-Butanone	430,000	**4.6** J1	6.3	0.65	5.7 U	5.7	0.59	6.1 U	6.1	0.63	**5.1** J1	6.7	0.69	**3.4** J1	4.8	0.49
1,1,1-Trichloroethane	1,900,000	1.3 U	1.3	0.29	1.1 U	1.1	0.26	1.2 U	1.2	0.28	1.3 U	1.3	0.30	1.0 U	1.0	0.21
Carbon Tetrachloride	21	1.3 U	1.3	0.27	1.1 U	1.1	0.24	1.2 U	1.2	0.26	1.3 U	1.3	0.28	1.0 U	1.0	0.20
Vinyl Acetate	---	6.3 U	6.3	0.48	5.7 U	5.7	0.44	6.1 U	6.1	0.47	6.7 U	6.7	0.51	4.8 U	4.8	0.36
Bromodichloromethane	89	1.3 U	1.3	0.32	1.1 U	1.1	0.29	1.2 U	1.2	0.31	1.3 U	1.3	0.34	1.0 U	1.0	0.24
1,2-Dichloropropane	92	1.3 U	1.3	0.20	1.1 U	1.1	0.19	1.2 U	1.2	0.20	1.3 U	1.3	0.22	1.0 U	1.0	0.15
cis-1,3-Dichloropropene	---	1.3 U	1.3	0.29	1.1 U	1.1	0.26	1.2 U	1.2	0.28	1.3 U	1.3	0.30	1.0 U	1.0	0.21
Trichloroethene	51	1.3 U	1.3	0.27	1.1 U	1.1	0.24	1.2 U	1.2	0.26	1.3 U	1.3	0.28	1.0 U	1.0	0.20
Dibromochloromethane	---	1.3 U	1.3	0.34	1.1 U	1.1	0.31	1.2 U	1.2	0.33	1.3 U	1.3	0.36	1.0 U	1.0	0.25
1,1,2-Trichloroethane	73	1.3 U	1.3	0.36	1.1 U	1.1	0.33	1.2 U	1.2	0.35	1.3 U	1.3	0.38	1.0 U	1.0	0.27
Benzene	93	**1.0** J1	1.3	0.37	1.1 U	1.1	0.34	1.2 U	1.2	0.36	1.3 U	1.3	0.40	1.0 U	1.0	0.28
trans-1,3-Dichloropropene	---	1.3 U	1.3	0.27	1.1 U	1.1	0.25	1.2 U	1.2	0.26	1.3 U	1.3	0.29	1.0 U	1.0	0.21
2-Chloroethylvinylether	---	6.3 U	6.3	0.35	5.7 U	5.7	0.32	6.1 U	6.1	0.34	6.7 U	6.7	0.37	4.8 U	4.8	0.26
Bromoform	---	1.3 U	1.3	0.38	1.1 U	1.1	0.34	1.2 U	1.2	0.36	1.3 U	1.3	0.40	1.0 U	1.0	0.28
4-Methyl-2-Pentanone (MIBK)	170,000	6.3 U	6.3	0.53	5.7 U	5.7	0.48	6.1 U	6.1	0.51	6.7 U	6.7	0.56	4.8 U	4.8	0.40
2-Hexanone	32,000	6.3 U	6.3	0.55	5.7 U	5.7	0.50	6.1 U	6.1	0.54	6.7 U	6.7	0.59	4.8 U	4.8	0.42
Tetrachloroethene	260	1.3 U	1.3	0.32	1.1 U	1.1	0.29	1.2 U	1.2	0.31	1.3 U	1.3	0.34	1.0 U	1.0	0.24
1,1,2,2-Tetrachloroethane	13	1.3 U	1.3	0.32	1.1 U	1.1	0.29	1.2 U	1.2	0.31	1.3 U	1.3	0.34	1.0 U	1.0	0.24
Toluene	100,000	**1.1** J1	1.3	0.19	1.1 U	1.1	0.17	1.2 U	1.2	0.19	1.3 U	1.3	0.20	1.0 U	1.0	0.14
Chlorobenzene	26,000	1.3 U	1.3	0.28	1.1 U	1.1	0.25	1.2 U	1.2	0.27	1.3 U	1.3	0.29	1.0 U	1.0	0.21
Ethylbenzene	230	1.3 U	1.3	0.26	1.1 U	1.1	0.23	1.2 U	1.2	0.25	1.3 U	1.3	0.27	1.0 U	1.0	0.19
Styrene	16,000,000	1.3 U	1.3	0.17	1.1 U	1.1	0.16	1.2 U	1.2	0.17	1.3 U	1.3	0.18	1.0 U	1.0	0.13
Trichlorofluoromethane	200,000	1.3 U	1.3	0.34	1.1 U	1.1	0.31	1.2 U	1.2	0.33	1.3 U	1.3	0.36	1.0 U	1.0	0.25
1,1,2-Trichloro-1,2,2-trifuoroethane	1,000,000,000	2.5 U	2.5	0.36	2.3 U	2.3	0.33	2.5 U	2.5	0.35	2.7 U	2.7	0.38	**0.8** J1	1.9	0.27
m,p-Xylene	160,000	1.3 U	1.3	0.49	1.1 U	1.1	0.45	1.2 U	1.2	0.48	1.3 U	1.3	0.52	1.0 U	1.0	0.37
o-Xylene	200,000	1.3 U	1.3	0.28	1.1 U	1.1	0.26	1.2 U	1.2	0.27	1.3 U	1.3	0.30	1.0 U	1.0	0.21
1,2-Dichlorobenzene	68,000	1.3 U	1.3	0.37	1.1 U	1.1	0.34	1.2 U	1.2	0.36	1.3 U	1.3	0.39	1.0 U	1.0	0.28
1,3-Dichlorobenzene	3,840	1.3 U	1.3	0.29	1.1 U	1.1	0.26	1.2 U	1.2	0.28	1.3 U	1.3	0.30	1.0 U	1.0	0.22
1,4-Dichlorobenzene	3,500	1.3 U	1.3	0.29	1.1 U	1.1	0.27	1.2 U	1.2	0.28	1.3 U	1.3	0.31	1.0 U	1.0	0.22
Acrolein	---	63 U	63	4.8	57 U	57	4.4	61 U	61	4.7	67 U	67	5.1	48 U	48	3.6
Methyl Iodide	---	1.3 U	1.3	0.27	1.1 U	1.1	0.25	1.2 U	1.2	0.26	**0.8** J1	1.3	0.29	1.0 U	1.0	0.20
Bromoethane	---	2.5 U	2.5	0.56	2.3 U	2.3	0.50	2.5 U	2.5	0.54	2.7 U	2.7	0.59	1.9 U	1.9	0.42
Acrylonitrile	---	6.3 U	6.3	1.3	5.7 U	5.7	1.2	6.1 U	6.1	1.3	6.7 U	6.7	1.4	4.8 U	4.8	0.98
1,1-Dichloropropene	---	1.3 U	1.3	0.39	1.1 U	1.1	0.36	1.2 U	1.2	0.38	1.3 U	1.3	0.42	1.0 U	1.0	0.30
Dibromomethane	---	1.3 U	1.3	0.19	1.1 U	1.1	0.17	1.2 U	1.2	0.18	1.3 U	1.3	0.20	1.0 U	1.0	0.14
1,1,1,2-Tetrachloroethane	---	1.3 U	1.3	0.29	1.1 U	1.1	0.27	1.2 U	1.2	0.29	1.3 U	1.3	0.31	1.0 U	1.0	0.22
1,2-Dibromo-3-chloropropane	---	6.3 U	6.3	0.74	5.7 U	5.7	0.67	6.1 U	6.1	0.72	6.7 U	6.7	0.78	4.8 U	4.8	0.56
1,2,3-Trichloropropane	---	2.5 U	2.5	0.65	2.3 U	2.3	0.59	2.5 U	2.5	0.63	2.7 U	2.7	0.69	1.9 U	1.9	0.49
trans-1,4-Dichloro-2-butene	---	6.3 U	6.3	0.55	5.7 U	5.7	0.50	6.1 U	6.1	0.54	6.7 U	6.7	0.58	4.8 U	4.8	0.42
1,3,5-Trimethylbenzene	800,000	1.3 U	1.3	0.32	1.1 U	1.1	0.29	1.2 U	1.2	0.31	1.3 U	1.3	0.34	1.0 U	1.0	0.24
1,2,4-Trimethylbenzene	800,000	1.3 U	1.3	0.29	1.1 U	1.1	0.26	1.2 U	1.2	0.28	1.3 U	1.3	0.31	1.0 U	1.0	0.22
Hexachlorobutadiene	---	6.3 U	6.3	0.52	5.7 U	5.7	0.47	6.1 U	6.1	0.50	6.7 U	6.7	0.55	4.8 U	4.8	0.39

TABLE M-3
MONITORING WELL BORINGS SOIL ANALYTICAL RESULTS
BOEING ISAACSON-THOMPSON
REMEDIAL INVESTIGATION

	Preliminary Cleanup Level	IT-MW-10(2-3.5) TU65D 10/31/2011			IT-MW-10(5-6.5) TU65E 10/31/2011			IT-MW-10(8-9.5) TV99G 11/07/2011			IT-MW-10(13.5-15) TV99H 11/07/2011			IT-MW-11(2-3.5) TU65F 10/31/2011		
		Result	Reporting Limit	Detection Limit	Result	Reporting Limit	Detection Limit	Result	Reporting Limit	Detection Limit	Result	Reporting Limit	Detection Limit	Result	Reporting Limit	Detection Limit
Ethylene Dibromide	---	1.3 U	1.3	0.22	1.1 U	1.1	0.20	1.2 U	1.2	0.22	1.3 U	1.3	0.24	1.0 U	1.0	0.17
Bromochloromethane	---	1.3 U	1.3	0.41	1.1 U	1.1	0.37	1.2 U	1.2	0.40	1.3 U	1.3	0.43	1.0 U	1.0	0.31
2,2-Dichloropropane	---	1.3 U	1.3	0.37	1.1 U	1.1	0.33	1.2 U	1.2	0.36	1.3 U	1.3	0.39	1.0 U	1.0	0.28
1,3-Dichloropropane	---	1.3 U	1.3	0.26	1.1 U	1.1	0.24	1.2 U	1.2	0.26	1.3 U	1.3	0.28	1.0 U	1.0	0.20
Isopropylbenzene	78,000	1.3 U	1.3	0.29	1.1 U	1.1	0.27	1.2 U	1.2	0.29	1.3 U	1.3	0.31	1.0 U	1.0	0.22
n-Propylbenzene	11,000	1.3 U	1.3	0.34	1.1 U	1.1	0.31	1.2 U	1.2	0.33	1.3 U	1.3	0.36	1.0 U	1.0	0.26
Bromobenzene	---	1.3 U	1.3	0.19	1.1 U	1.1	0.18	1.2 U	1.2	0.19	1.3 U	1.3	0.20	1.0 U	1.0	0.15
2-Chlorotoluene	---	1.3 U	1.3	0.38	1.1 U	1.1	0.34	1.2 U	1.2	0.37	1.3 U	1.3	0.40	1.0 U	1.0	0.29
4-Chlorotoluene	400,000	1.3 U	1.3	0.35	1.1 U	1.1	0.32	1.2 U	1.2	0.34	1.3 U	1.3	0.37	1.0 U	1.0	0.26
tert-Butylbenzene	---	1.3 U	1.3	0.39	1.1 U	1.1	0.35	1.2 U	1.2	0.38	1.3 U	1.3	0.41	1.0 U	1.0	0.29
sec-Butylbenzene	---	1.3 U	1.3	0.30	1.1 U	1.1	0.28	1.2 U	1.2	0.29	1.3 U	1.3	0.32	1.0 U	1.0	0.23
4-Isopropyltoluene	---	1.3 U	1.3	0.30	1.1 U	1.1	0.27	1.2 U	1.2	0.29	1.3 U	1.3	0.32	1.0 U	1.0	0.22
n-Butylbenzene	27,000	1.3 U	1.3	0.33	1.1 U	1.1	0.30	1.2 U	1.2	0.32	1.3 U	1.3	0.35	1.0 U	1.0	0.25
1,2,4-Trichlorobenzene	80	6.3 U	6.3	0.42	5.7 U	5.7	0.38	6.1 U	6.1	0.41	6.7 U	6.7	0.44	4.8 U	4.8	0.32
Naphthalene	2,100	6.3 U	6.3	0.54	5.7 U	5.7	0.49	6.1 U	6.1	0.53	6.7 U	6.7	0.57	4.8 U	4.8	0.41
1,2,3-Trichlorobenzene	---	6.3 U	6.3	0.39	5.7 U	5.7	0.35	6.1 U	6.1	0.37	6.7 U	6.7	0.41	4.8 U	4.8	0.29
SEMIVOLATILES (µg/kg)																
Method SW8270D																
Phenol	1,900,000	19 U	19	8.4	18 U	18	7.7	20 U	20	8.4	**11** J1	19	8.4	19 U	19	8.4
Bis-(2-Chloroethyl) Ether	---	19 U	19	3.2	18 U	18	3.0	20 U	20	3.3	19 U	19	3.3	19 U	19	3.2
2-Chlorophenol	---	19 U	19	2.3	18 U	18	2.1	20 U	20	2.3	19 U	19	2.3	19 U	19	2.3
1,3-Dichlorobenzene	3,840	19 U	19	2.5	18 U	18	2.4	20 U	20	2.6	19 U	19	2.6	19 U	19	2.5
1,4-Dichlorobenzene	3,500	19 U	19	2.8	18 U	18	2.6	20 U	20	2.8	19 U	19	2.8	19 U	19	2.8
Benzyl Alcohol	8,000,000	19 U	19	5.9	18 U	18	5.5	20 U	20	5.9	**19**	19	5.9	19 U	19	5.9
1,2-Dichlorobenzene	68,000	19 U	19	2.4	18 U	18	2.2	20 U	20	2.4	19 U	19	2.4	19 U	19	2.4
2-Methylphenol	250,000	19 U	19	5.1	18 U	18	4.7	20 U	20	5.1	19 U	19	5.1	19 U	19	5.1
2,2'-Oxybis(1-Chloropropane)	---	19 U	19	3.6	18 U	18	3.4	20 U	20	3.7	19 U	19	3.7	19 U	19	3.6
4-Methylphenol	41,000	39 U	39	6.4	36 U	36	5.9	39 U	39	6.4	**62**	39	6.4	39 U	39	6.4
N-Nitroso-Di-N-Propylamine	---	19 U	19	3.2	18 U	18	3.0	20 U	20	3.3	19 U	19	3.3	19 U	19	3.3
Hexachloroethane	---	19 U	19	2.8	18 U	18	2.6	20 U	20	2.9	19 U	19	2.9	19 U	19	2.8
Nitrobenzene	---	19 U	19	3.9	18 U	18	3.6	20 U	20	3.9	19 U	19	3.9	19 U	19	3.9
Isophorone	---	19 U	19	2.8	18 U	18	2.6	20 U	20	2.8	19 U	19	2.8	19 U	19	2.8
2-Nitrophenol	---	97 U	97	37	90 U	90	35	97 U	97	38	97 U	97	38	97 U	97	37
2,4-Dimethylphenol	95,000	39 U	39	3.3	36 U	36	3.1	39 U	39	3.4	39 U	39	3.4	39 U	39	3.3
Benzoic Acid	9,000	390 U	390	98	360 U	360	90	390 U	390	98	**180** J1	390	98	390 U	390	98
bis(2-Chloroethoxy) Methane	---	19 U	19	1.9	18 U	18	1.8	20 U	20	1.9	19 U	19	1.9	19 U	19	1.9
2,4-Dichlorophenol	---	190 U	190	21	180 U	180	19	200 U	200	21	190 U	190	21	190 U	190	21
1,2,4-Trichlorobenzene	80	19 U	19	3.4	18 U	18	3.1	20 U	20	3.4	19 U	19	3.4	19 U	19	3.4
Naphthalene	2,100	19 U	19	2.7	18 U	18	2.5	20 U	20	2.7	**170**	19	2.7	19 U	19	2.7
4-Chloroaniline	---	260 U	260	22	240 U	240	20	260 U	260	22	260 U	260	22	260 U	260	22
Hexachlorobutadiene	---	97 U	97	4.4	90 U	90	4.1	97 U	97	4.4	97 U	97	4.4	97 U	97	4.4
4-Chloro-3-methylphenol	740,000	97 U	97	15	90 U	90	14	97 U	97	15	97 U	97	15	97 U	97	15
2-Methylnaphthalene	320,000	19 U	19	3.0	18 U	18	2.7	20 U	20	3.0	**120**	19	3.0	19 U	19	3.0
Hexachlorocyclopentadiene	---	390 UJ	390	64	360 UJ	360	59	390 U	390	65	390 U	390	64	390 UJ	390	64
2,4,6-Trichlorophenol	---	97 U	97	22	90 U	90	20	97 U	97	22	97 U	97	22	97 U	97	22
2,4,5-Trichlorophenol	---	97 U	97	21	90 U	90	19	97 U	97	21	97 U	97	21	97 U	97	21
2-Chloronaphthalene	---	19 U	19	2.6	18 U	18	2.4	20 U	20	2.6	19 U	19	2.6	19 U	19	2.6
2-Nitroaniline	---	97 U	97	18	90 U	90	16	97 U	97	18	97 U	97	18	97 U	97	18
Dimethylphthalate	71	19 U	19	2.8	18 U	18	2.6	20 U	20	2.8	19 U	19	2.8	19 U	19	2.8
Acenaphthylene	---	19 U	19	5.5	18 U	18	5.1	20 U	20	5.6	19 U	19	5.5	19 U	19	5.5
3-Nitroaniline	---	97 U	97	22	90 U	90	20	97 U	97	22	97 U	97	22	97 U	97	22
Acenaphthene	230,000	19 U	19	3.2	18 U	18	2.9	20 U	20	3.2	**85**	19	3.2	19 U	19	3.2
2,4-Dinitrophenol	---	820 U	820	110	760 U	760	99	830 U	830	110	820 U	820	110	820 U	820	110
4-Nitrophenol	---	97 UJ	97	34	90 UJ	90	31	97 U	97	34	97 U	97	34	97 UJ	97	34
Dibenzofuran	80,000	19 U	19	4.0	18 U	18	3.7	20 U	20	4.0	**71**	19	4.0	**9.7** J1	19	4.0
2,6-Dinitrotoluene	---	97 U	97	30	90 U	90	27	97 U	97	30	97 U	97	30	97 U	97	30

TABLE M-3
MONITORING WELL BORINGS SOIL ANALYTICAL RESULTS
BOEING ISAACSON-THOMPSON
REMEDIAL INVESTIGATION

	Preliminary Cleanup Level	IT-MW-10(2-3.5) TU65D 10/31/2011			IT-MW-10(5-6.5) TU65E 10/31/2011			IT-MW-10(8-9.5) TV99G 11/07/2011			IT-MW-10(13.5-15) TV99H 11/07/2011			IT-MW-11(2-3.5) TU65F 10/31/2011		
		Result	Reporting Limit	Detection Limit	Result	Reporting Limit	Detection Limit	Result	Reporting Limit	Detection Limit	Result	Reporting Limit	Detection Limit	Result	Reporting Limit	Detection Limit
2,4-Dinitrotoluene	---	97 U	97	19	90 U	90	17	97 U	97	19	97 U	97	19	97 U	97	19
Diethylphthalate	178,000	48 U	48	35	45 U	45	33	49 U	49	36	48 U	48	36	48 U	48	35
4-Chlorophenyl-phenylether	---	19 U	19	5.1	18 U	18	4.7	20 U	20	5.1	19 U	19	5.1	19 U	19	5.1
Fluorene	150,000	19 U	19	4.2	18 U	18	3.9	20 U	20	4.2	**99** J	19	4.2	19 U	19	4.2
4-Nitroaniline	---	97 U	97	37	90 U	90	34	97 U	97	37	97 U	97	37	97 U	97	37
4,6-Dinitro-2-Methylphenol	---	190 U	190	21	180 U	180	19	200 U	200	21	190 U	190	21	190 U	190	21
N-Nitrosodiphenylamine	204,000	19 U	19	5.2	18 U	18	4.8	20 U	20	5.2	19 U	19	5.2	19 U	19	5.2
4-Bromophenyl-phenylether	---	19 U	19	4.9	18 U	18	4.5	20 U	20	4.9	19 U	19	4.9	19 U	19	4.9
Hexachlorobenzene	---	19 U	19	4.1	18 U	18	3.8	20 U	20	4.2	19 U	19	4.2	19 U	19	4.2
Pentachlorophenol	---	190 UJ	190	47	180 UJ	180	43	200 U	200	47	190 U	190	47	190 UJ	190	47
Phenanthrene	---	**36**	19	3.5	18 U	18	3.3	**30**	20	3.5	**210**	19	3.5	**32**	19	3.5
Carbazole	50,000	19 U	19	2.6	18 U	18	2.4	20 U	20	2.6	**18** J1	19	2.6	19 U	19	2.6
Anthracene	1,600,000	19 U	19	4.4	18 U	18	4.0	20 U	20	4.4	**22**	19	4.4	19 U	19	4.4
Di-n-Butylphthalate	26,000	19 U	19	7.9	18 U	18	7.3	20 U	20	7.9	19 U	19	7.9	19 U	19	7.9
Fluoranthene	230,000	**40**	19	2.8	18 U	18	2.6	**42**	20	2.8	**81**	19	2.8	**25**	19	2.8
Pyrene	240,000	**40**	19	1.9	18 U	18	1.7	**59** J	20	1.9	**93** J	19	1.9	**24**	19	1.9
Butylbenzylphthalate	1,700	19 U	19	5.9	18 U	18	5.5	20 U	20	6.0	19 U	19	6.0	19 U	19	5.9
3,3'-Dichlorobenzidine	---	140 UJ	140	17	130 UJ	130	16	150 UJ	150	17	150 UJ	150	17	140 UJ	140	17
Benzo(a)anthracene	---	**16** J1	19	3.2	18 U	18	2.9	**20**	20	3.2	**26**	19	3.2	19 U	19	3.2
bis(2-Ethylhexyl)phthalate	56,600	23 UJ2	24	14	15 UJ2	22	13	25 U	24	14	58 U	24	14	21 UJ2	24	14
Chrysene	---	**28**	19	3.6	18 U	18	3.4	**24**	20	3.6	**38**	19	3.6	**12** J1	19	3.6
Di-n-Octyl phthalate	---	19 U	19	5.6	18 U	18	5.2	20 U	20	5.7	19 U	19	5.7	19 U	19	5.7
Benzo(a)pyrene	---	**21**	19	5.3	18 U	18	4.9	**30**	20	5.3	**21**	19	5.3	19 U	19	5.3
Indeno(1,2,3-cd)pyrene	---	**14** J1	19	4.5	18 U	18	4.2	20 U	20	4.6	19 U	19	4.5	19 U	19	4.5
Dibenz(a,h)anthracene	---	19 U	19	4.2	18 U	18	3.9	20 U	20	4.2	19 U	19	4.2	19 U	19	4.2
Benzo(g,h,i)perylene	---	**22**	19	4.3	18 U	18	3.9	**15** J1	20	4.3	**16** J1	19	4.3	19 U	19	4.3
1-Methylnaphthalene	16,000	19 U	19	2.6	18 U	18	2.4	20 U	20	2.6	**81**	19	2.6	19 U	19	2.6
Total Benzofluoranthenes	---	**44**	19	2.7	18 U	18	2.5	**36**	20	2.7	**38**	19	2.7	**12** J1	19	2.7
cPAH TEQ	15	**29** J	NA	NA	ND	NA	NA	**36**	NA	NA	**28**	NA	NA	**1.3** J	NA	NA
PAHs (µg/kg)																
Method SW8270D-SIM																
Naphthalene	2,100	**3.8** J1	4.8	2.6	4.6 U	4.6	2.4	**4.5** J1	4.9	2.6	**200**	4.9	2.6	**20**	4.8	2.5
2-Methylnaphthalene	320,000	**4.6** J1	4.8	1.5	4.6 U	4.6	1.4	**3.2** J1	4.9	1.5	**130**	4.9	1.5	**10**	4.8	1.5
1-Methylnaphthalene	16,000	**3.9** J1	4.8	1.7	4.6 U	4.6	1.6	4.9 U	4.9	1.7	**82**	4.9	1.7	**5.6**	4.8	1.7
Total Naphthalenes	---	**12.3** J1	NA	NA	4.6 U	NA	NA	**7.7** J1	NA	NA	**412**	NA	NA	**35.6**	NA	NA
Acenaphthylene	---	4.8 U	4.8	1.2	4.6 U	4.6	1.2	4.9 U	4.9	1.2	4.9 U	4.9	1.2	4.8 U	4.8	1.2
Acenaphthene	230,000	**3.8** J1	4.8	1.3	4.6 U	4.6	1.2	**3.0** J1	4.9	1.3	**90**	4.9	1.3	**5.5**	4.8	1.3
Fluorene	150,000	**3.5** J1	4.8	1.3	4.6 U	4.6	1.2	**2.5** J1	4.9	1.3	**72**	4.9	1.3	**3.9** J1	4.8	1.2
Phenanthrene	---	**26**	4.8	1.9	4.6 U	4.6	1.8	**29**	4.9	1.9	**190**	4.9	2.0	**18**	4.8	1.9
Anthracene	1,600,000	**6.3**	4.8	1.4	4.6 U	4.6	1.4	**6.2**	4.9	1.4	**30**	4.9	1.4	**2.7** J1	4.8	1.4
Fluoranthene	230,000	**30**	4.8	1.7	4.6 U	4.6	1.6	**42**	4.9	1.7	**83**	4.9	1.7	**16**	4.8	1.7
Pyrene	240,000	**23**	4.8	2.2	4.6 U	4.6	2.1	**48**	4.9	2.2	**64**	4.9	2.2	**14**	4.8	2.2
Benzo(a)anthracene	---	**14**	4.8	1.6	4.6 U	4.6	1.5	**21**	4.9	1.6	**21**	4.9	1.6	**5.8**	4.8	1.6
Chrysene	---	**21**	4.8	1.8	4.6 U	4.6	1.7	**25**	4.9	1.8	**31**	4.9	1.9	**7.3**	4.8	1.8
Benzo(a)pyrene	---	**14**	4.8	1.7	4.6 U	4.6	1.6	**30**	4.9	1.7	**23**	4.9	1.7	**5.6**	4.8	1.7
Indeno(1,2,3-cd)pyrene	---	**11**	4.8	3.4	4.6 U	4.6	3.2	**17**	4.9	3.4	**11**	4.9	3.4	**3.9** J1	4.8	3.4
Dibenz(a,h)anthracene	---	**5.2** M	4.8	2.3	4.6 U	4.6	2.2	**6.5**	4.9	2.3	**4.1** J1	4.9	2.4	4.8 U	4.8	2.3
Benzo(g,h,i)perylene	---	**15**	4.8	3.0	4.6 U	4.6	2.8	**22**	4.9	3.0	**16**	4.9	3.0	**4.8** J1	4.8	3.0
Dibenzofuran	80,000	**4.2** J1	4.8	1.5	4.6 U	4.6	1.4	4.9 U	4.9	1.5	**61**	4.9	1.5	**6.3**	4.8	1.5
Total Benzofluoranthenes	---	**33**	4.8	1.8	4.6 U	4.6	1.7	**42**	4.9	1.8	**37**	4.9	1.8	**11**	4.8	1.8
cPAH TEQ	15	**21** J	NA	NA	ND	NA	NA	**39**	NA	NA	**31** J	NA	NA	**7.7** J	NA	NA

TABLE M-3
MONITORING WELL BORINGS SOIL ANALYTICAL RESULTS
BOEING ISAACSON-THOMPSON
REMEDIAL INVESTIGATION

	Preliminary Cleanup Level	IT-MW-10(2-3.5) TU65D 10/31/2011			IT-MW-10(5-6.5) TU65E 10/31/2011			IT-MW-10(8-9.5) TV99G 11/07/2011			IT-MW-10(13.5-15) TV99H 11/07/2011			IT-MW-11(2-3.5) TU65F 10/31/2011		
		Result	Reporting Limit	Detection Limit	Result	Reporting Limit	Detection Limit	Result	Reporting Limit	Detection Limit	Result	Reporting Limit	Detection Limit	Result	Reporting Limit	Detection Limit
PCBs (µg/kg)																
Method SW8082																
Aroclor 1016	0.72	33 U	33	2.0	31 U	31	1.9	29 U	29	1.8	31 U	31	1.9	31 U	31	1.9
Aroclor 1242	0.72	33 U	33	2.5	31 U	31	2.3	29 U	29	2.2	31 U	31	2.3	31 U	31	2.3
Aroclor 1248	220	33 U	33	2.5	31 U	31	2.3	29 U	29	2.2	**69**	31	2.3	31 U	31	2.3
Aroclor 1254	0.29	33 U	33	2.5	31 U	31	2.3	29 U	29	2.2	**160**	31	2.3	31 U	31	2.3
Aroclor 1260	5.4	33 U	33	2.5	31 U	31	2.3	29 U	29	2.2	**64**	31	2.3	31 U	31	2.3
Aroclor 1221	---	33 U	33	2.5	31 U	31	2.3	29 U	29	2.2	31 U	31	2.3	31 U	31	2.3
Aroclor 1232	---	33 U	33	2.5	31 U	31	2.3	29 U	29	2.2	31 U	31	2.3	31 U	31	2.3
Total PCBs	1.8	ND	NA	NA	ND	NA	NA	ND	NA	NA	**293**	NA	NA	ND	NA	NA
TOTAL PETROLEUM HYDROCARBONS (mg/kg)																
NWTPH-Dx																
Diesel-Range Organics	2,000	**6.1**	5.2	1.3	5.0 U	5.0	1.3	5.5 U	5.5	1.4	**35**	6.4	1.6	**6.2**	5.4	1.4
Motor Oil-Range Organics	2,000	**19**	10	1.6	10 U	10	1.6	11 U	11	1.7	**56**	13	2.0	**17**	11	1.7
NWTPH-G																
Gasoline-Range Organics	100/30	6.8 U	6.8	3.2	6.2 U	6.2	3.0	**7.8**	6.7	3.2	**8.7**	8.3	4.0	5.5 U	5.5	2.6
TOTAL METALS (mg/kg)																
Methods 200.8/7471A/SW7196A																
Antimony	5	0.2 U	0.2	0.013	0.2 U	0.2	0.012	0.2 U	0.2	0.014	0.3 U	0.3	0.017	0.2 U	0.2	0.013
Arsenic	7	**4.6**	0.2	0.088	**1.6**	0.2	0.083	**2.2**	0.2	0.091	**209**	0.3	0.12	**6.6**	0.2	0.090
Barium	640	**53.6**	0.5	0.057	**38.4**	0.5	0.053	**38.7**	0.5	0.058	**71.4**	0.7	0.075	**52.5**	0.5	0.058
Beryllium	160	**0.2**	0.2	0.018	0.2 U	0.2	0.017	0.2 U	0.2	0.019	**0.4**	0.3	0.024	**0.2**	0.2	0.019
Cadmium	1.3	**0.1**	0.1	0.012	0.1 U	0.1	0.011	0.1 U	0.1	0.013	**0.6**	0.1	0.016	**0.1**	0.1	0.012
Chromium	1,480	**21.6**	0.5	0.039	**24.1**	0.5	0.036	**22.2**	0.5	0.040	**21.0**	0.7	0.051	**21.3**	0.5	0.039
Chromium VI	3.8	0.45 U	0.45	0.030	0.415 U	0.415	0.030	0.426 U	0.426	0.030	0.564 U	0.564	0.030	0.412 U	0.412	0.030
Copper	36	**25.8**	0.5	0.037	**10.5**	0.5	0.034	**14.1**	0.5	0.038	**32.7**	0.7	0.048	**22.5**	0.5	0.037
Lead	250	**23.4**	0.1	0.048	**1.9**	0.1	0.045	**5.1**	0.1	0.049	**30.5**	0.1	0.063	**7.5**	0.1	0.049
Mercury	1.5	**0.04**	0.02	0.0011	0.02 U	0.02	0.0010	0.02 U	0.02	0.0012	**0.12**	0.03	0.0015	**0.07**	0.02	0.0011
Nickel	210	**33.0**	0.5	0.050	**39.0**	0.5	0.047	**32.0**	0.5	0.051	**19.5**	0.7	0.065	**28.7**	0.5	0.051
Selenium	1.0	0.5 U	0.5	0.10	0.5 U	0.5	0.094	0.5 U	0.5	0.10	0.7 U	0.7	0.13	0.5 U	0.5	0.10
Silver	170	0.2 U	0.2	0.0081	0.2 U	0.2	0.0076	0.2 U	0.2	0.0083	0.3 U	0.3	0.011	0.2 U	0.2	0.0083
Thallium	0.67	0.2 U	0.2	0.0031	0.2 U	0.2	0.0029	0.2 U	0.2	0.0031	0.3 U	0.3	0.0040	0.2 U	0.2	0.0031
Zinc	1,400	**46**	4	0.34	**28**	4	0.32	**32**	4	0.35	**88**	5	0.45	**45**	4	0.35

TABLE M-3
MONITORING WELL BORINGS SOIL ANALYTICAL RESULTS
BOEING ISAACSON-THOMPSON
REMEDIAL INVESTIGATION

	Preliminary Cleanup Level	IT-MW-11(5-6.5) TU65G 10/31/2011			IT-MW-11(8-9.5) TV99D 11/07/2011			IT-MW-11(13.5-15) TV99E 11/07/2011			IT-MW-12(2-3.5) TV61A 11/03/2011			IT-MW-12(5-6.5) TV61K 11/03/2011		
		Result	Reporting Limit	Detection Limit	Result	Reporting Limit	Detection Limit	Result	Reporting Limit	Detection Limit	Result	Reporting Limit	Detection Limit	Result	Reporting Limit	Detection Limit
VOLATILES (µg/kg)																
Method SW8260C																
Chloromethane	1,600	1.2 U	1.2	0.30	1.0 U	1.0	0.27	1.1 U	1.1	0.28	1.2 U	1.2	0.31	1.2 U	1.2	0.31
Bromomethane	---	1.2 U	1.2	0.22	1.0 UJ	1.0	0.19	1.1 UJ	1.1	0.20	1.2 U	1.2	0.22	1.2 U	1.2	0.22
Vinyl Chloride	7.4	1.2 U	1.2	0.27	1.0 U	1.0	0.24	1.1 U	1.1	0.25	1.2 U	1.2	0.27	1.2 U	1.2	0.28
Chloroethane	280,000	1.2 U	1.2	0.53	1.0 U	1.0	0.47	1.1 U	1.1	0.49	1.2 U	1.2	0.54	1.2 U	1.2	0.55
Methylene Chloride	2400	**3.4** J	2.3	0.73	**1.3** J1	2.0	0.65	**1.4** J1	2.1	0.67	**2.7**	2.3	0.74	**1.9** J1	2.4	0.75
Acetone	510,000	14 U	5.8	0.56	**40** J	5.1	0.49	**28**	5.3	0.51	**26**	5.8	0.56	**6.1**	5.9	0.57
Carbon Disulfide	75,000	1.2 U	1.2	0.65	**2.0** J	1.0	0.57	**18**	1.1	0.59	1.2 U	1.2	0.65	1.2 U	1.2	0.66
1,1-Dichloroethene	81	1.2 U	1.2	0.39	1.0 UJ	1.0	0.34	1.1 U	1.1	0.35	1.2 U	1.2	0.39	1.2 U	1.2	0.40
1,1-Dichloroethane	710	1.2 U	1.2	0.23	1.0 UJ	1.0	0.21	1.1 U	1.1	0.21	1.2 U	1.2	0.24	1.2 U	1.2	0.24
trans-1,2-Dichloroethene	19,000	1.2 U	1.2	0.31	1.0 UJ	1.0	0.27	1.1 U	1.1	0.28	1.2 U	1.2	0.31	1.2 U	1.2	0.32
cis-1,2-Dichloroethene	2,600	1.2 U	1.2	0.28	1.0 U	1.0	0.24	1.1 U	1.1	0.25	1.2 U	1.2	0.28	1.2 U	1.2	0.28
Chloroform	200	1.2 U	1.2	0.27	1.0 UJ	1.0	0.24	1.1 U	1.1	0.25	1.2 U	1.2	0.27	1.2 U	1.2	0.28
1,2-Dichloroethane	70	1.2 U	1.2	0.22	1.0 U	1.0	0.19	1.1 U	1.1	0.20	1.2 U	1.2	0.22	1.2 U	1.2	0.23
2-Butanone	430,000	5.8 U	5.8	0.59	**5.6**	5.1	0.52	**4.5** J1	5.3	0.54	5.8 U	5.8	0.60	5.9 U	5.9	0.61
1,1,1-Trichloroethane	1,900,000	1.2 U	1.2	0.26	1.0 U	1.0	0.23	1.1 U	1.1	0.24	1.2 U	1.2	0.26	1.2 U	1.2	0.27
Carbon Tetrachloride	21	1.2 U	1.2	0.25	1.0 U	1.0	0.22	1.1 U	1.1	0.22	1.2 U	1.2	0.25	1.2 U	1.2	0.25
Vinyl Acetate	---	5.8 U	5.8	0.44	5.1 U	5.1	0.39	5.3 U	5.3	0.40	5.8 U	5.8	0.44	5.9 U	5.9	0.45
Bromodichloromethane	89	1.2 U	1.2	0.29	1.0 U	1.0	0.26	1.1 U	1.1	0.27	1.2 U	1.2	0.30	1.2 U	1.2	0.30
1,2-Dichloropropane	92	1.2 U	1.2	0.19	1.0 U	1.0	0.17	1.1 U	1.1	0.17	1.2 U	1.2	0.19	1.2 U	1.2	0.19
cis-1,3-Dichloropropene	---	1.2 U	1.2	0.26	1.0 U	1.0	0.23	1.1 U	1.1	0.24	1.2 U	1.2	0.26	1.2 U	1.2	0.27
Trichloroethene	51	1.2 U	1.2	0.24	1.0 UJ	1.0	0.22	1.1 U	1.1	0.22	1.2 U	1.2	0.25	1.2 U	1.2	0.25
Dibromochloromethane	---	1.2 U	1.2	0.31	1.0 U	1.0	0.27	1.1 U	1.1	0.28	1.2 U	1.2	0.31	1.2 U	1.2	0.32
1,1,2-Trichloroethane	73	1.2 U	1.2	0.33	1.0 U	1.0	0.29	1.1 U	1.1	0.30	1.2 U	1.2	0.33	1.2 U	1.2	0.34
Benzene	93	1.2 U	1.2	0.34	**0.6** J1	1.0	0.30	**0.9** J1	1.1	0.31	1.2 U	1.2	0.34	1.2 U	1.2	0.35
trans-1,3-Dichloropropene	---	1.2 U	1.2	0.25	1.0 U	1.0	0.22	1.1 U	1.1	0.23	1.2 U	1.2	0.25	1.2 U	1.2	0.26
2-Chloroethylvinylether	---	5.8 U	5.8	0.32	5.1 U	5.1	0.28	5.3 U	5.3	0.29	5.8 U	5.8	0.32	5.9 U	5.9	0.33
Bromoform	---	1.2 U	1.2	0.34	1.0 U	1.0	0.30	1.1 U	1.1	0.31	1.2 U	1.2	0.35	1.2 U	1.2	0.35
4-Methyl-2-Pentanone (MIBK)	170,000	5.8 U	5.8	0.48	5.1 U	5.1	0.43	5.3 U	5.3	0.44	5.8 U	5.8	0.49	5.9 U	5.9	0.50
2-Hexanone	32,000	5.8 U	5.8	0.51	5.1 U	5.1	0.45	5.3 U	5.3	0.46	5.8 U	5.8	0.51	5.9 U	5.9	0.52
Tetrachloroethene	260	1.2 U	1.2	0.30	1.0 UJ	1.0	0.26	1.1 U	1.1	0.27	1.2 U	1.2	0.30	1.2 U	1.2	0.30
1,1,2,2-Tetrachloroethane	13	1.2 U	1.2	0.29	1.0 U	1.0	0.26	1.1 U	1.1	0.27	1.2 U	1.2	0.29	1.2 U	1.2	0.30
Toluene	100,000	1.2 U	1.2	0.17	**0.9** J, J1	1.0	0.15	**0.8** J1	1.1	0.16	1.2 U	1.2	0.18	1.2 U	1.2	0.18
Chlorobenzene	26,000	1.2 U	1.2	0.25	1.0 UJ	1.0	0.22	1.1 U	1.1	0.23	1.2 U	1.2	0.25	1.2 U	1.2	0.26
Ethylbenzene	230	1.2 U	1.2	0.23	1.0 UJ	1.0	0.21	1.1 U	1.1	0.21	1.2 U	1.2	0.23	1.2 U	1.2	0.24
Styrene	16,000,000	1.2 U	1.2	0.16	1.0 UJ	1.0	0.14	1.1 U	1.1	0.15	1.2 U	1.2	0.16	1.2 U	1.2	0.16
Trichlorofluoromethane	200,000	1.2 U	1.2	0.31	1.0 U	1.0	0.27	1.1 U	1.1	0.28	1.2 U	1.2	0.31	1.2 U	1.2	0.32
1,1,2-Trichloro-1,2,2-trifuoroethane	1,000,000,000	2.3 U	2.3	0.33	**1.5** J, J1	2.0	0.29	**5.5**	2.1	0.30	2.3 U	2.3	0.33	2.4 U	2.4	0.34
m,p-Xylene	160,000	1.2 U	1.2	0.45	1.0 UJ	1.0	0.40	1.1 U	1.1	0.41	1.2 U	1.2	0.46	1.2 U	1.2	0.46
o-Xylene	200,000	1.2 U	1.2	0.26	1.0 UJ	1.0	0.23	1.1 U	1.1	0.24	1.2 U	1.2	0.26	1.2 U	1.2	0.27
1,2-Dichlorobenzene	68,000	1.2 U	1.2	0.34	1.0 UJ	1.0	0.30	1.1 U	1.1	0.31	1.2 U	1.2	0.34	1.2 U	1.2	0.35
1,3-Dichlorobenzene	3,840	1.2 U	1.2	0.26	1.0 UJ	1.0	0.23	1.1 U	1.1	0.24	1.2 U	1.2	0.26	1.2 U	1.2	0.27
1,4-Dichlorobenzene	3,500	1.2 U	1.2	0.27	1.0 UJ	1.0	0.24	1.1 U	1.1	0.24	1.2 U	1.2	0.27	1.2 U	1.2	0.27
Acrolein	---	58 U	58	4.4	51 UJ	51	3.9	53 U	53	4.0	58 U	58	4.4	59 U	59	4.5
Methyl Iodide	---	1.2 U	1.2	0.25	1.0 UJ	1.0	0.22	1.1 U	1.1	0.23	1.2 U	1.2	0.25	1.2 U	1.2	0.25
Bromoethane	---	2.3 U	2.3	0.51	2.0 UJ	2.0	0.45	2.1 U	2.1	0.46	2.3 U	2.3	0.51	2.4 U	2.4	0.52
Acrylonitrile	---	5.8 U	5.8	1.2	5.1 U	5.1	1.1	5.3 U	5.3	1.1	5.8 U	5.8	1.2	5.9 U	5.9	1.2
1,1-Dichloropropene	---	1.2 U	1.2	0.36	1.0 U	1.0	0.32	1.1 U	1.1	0.33	1.2 U	1.2	0.36	1.2 U	1.2	0.37
Dibromomethane	---	1.2 U	1.2	0.17	1.0 U	1.0	0.15	1.1 U	1.1	0.15	1.2 U	1.2	0.17	1.2 U	1.2	0.17
1,1,1,2-Tetrachloroethane	---	1.2 U	1.2	0.27	1.0 U	1.0	0.24	1.1 U	1.1	0.25	1.2 U	1.2	0.27	1.2 U	1.2	0.28
1,2-Dibromo-3-chloropropane	---	5.8 U	5.8	0.68	5.1 U	5.1	0.60	5.3 U	5.3	0.62	5.8 U	5.8	0.68	5.9 U	5.9	0.69
1,2,3-Trichloropropane	---	2.3 U	2.3	0.60	2.0 U	2.0	0.53	2.1 U	2.1	0.54	2.3 U	2.3	0.60	2.4 U	2.4	0.61
trans-1,4-Dichloro-2-butene	---	5.8 U	5.8	0.50	5.1 U	5.1	0.45	5.3 U	5.3	0.46	5.8 U	5.8	0.51	5.9 U	5.9	0.52
1,3,5-Trimethylbenzene	800,000	1.2 U	1.2	0.29	1.0 UJ	1.0	0.26	1.1 U	1.1	0.27	1.2 U	1.2	0.30	1.2 U	1.2	0.30
1,2,4-Trimethylbenzene	800,000	1.2 U	1.2	0.27	1.0 UJ	1.0	0.23	1.1 U	1.1	0.24	1.2 U	1.2	0.27	1.2 U	1.2	0.27
Hexachlorobutadiene	---	5.8 U	5.8	0.47	5.1 UJ	5.1	0.42	5.3 U	5.3	0.43	5.8 U	5.8	0.48	5.9 U	5.9	0.49

TABLE M-3
MONITORING WELL BORINGS SOIL ANALYTICAL RESULTS
BOEING ISAACSON-THOMPSON
REMEDIAL INVESTIGATION

	Preliminary Cleanup Level	IT-MW-11(5-6.5) TU65G 10/31/2011			IT-MW-11(8-9.5) TV99D 11/07/2011			IT-MW-11(13.5-15) TV99E 11/07/2011			IT-MW-12(2-3.5) TV61A 11/03/2011			IT-MW-12(5-6.5) TV61K 11/03/2011		
		Result	Reporting Limit	Detection Limit	Result	Reporting Limit	Detection Limit	Result	Reporting Limit	Detection Limit	Result	Reporting Limit	Detection Limit	Result	Reporting Limit	Detection Limit
Ethylene Dibromide	---	1.2 U	1.2	0.20	1.0 U	1.0	0.18	1.1 U	1.1	0.19	1.2 U	1.2	0.20	1.2 U	1.2	0.21
Bromochloromethane	---	1.2 U	1.2	0.37	1.0 U	1.0	0.33	1.1 U	1.1	0.34	1.2 U	1.2	0.38	1.2 U	1.2	0.38
2,2-Dichloropropane	---	1.2 U	1.2	0.34	1.0 U	1.0	0.30	1.1 U	1.1	0.31	1.2 U	1.2	0.34	1.2 U	1.2	0.35
1,3-Dichloropropane	---	1.2 U	1.2	0.24	1.0 U	1.0	0.21	1.1 U	1.1	0.22	1.2 U	1.2	0.24	1.2 U	1.2	0.25
Isopropylbenzene	78,000	1.2 U	1.2	0.27	1.0 U	1.0	0.24	1.1 U	1.1	0.25	1.2 U	1.2	0.27	1.2 U	1.2	0.28
n-Propylbenzene	11,000	1.2 U	1.2	0.31	1.0 UJ	1.0	0.28	1.1 U	1.1	0.29	1.2 U	1.2	0.32	1.2 U	1.2	0.32
Bromobenzene	---	1.2 U	1.2	0.18	1.0 UJ	1.0	0.16	1.1 U	1.1	0.16	1.2 U	1.2	0.18	1.2 U	1.2	0.18
2-Chlorotoluene	---	1.2 U	1.2	0.35	1.0 UJ	1.0	0.31	1.1 U	1.1	0.32	1.2 U	1.2	0.35	1.2 U	1.2	0.36
4-Chlorotoluene	400,000	1.2 U	1.2	0.32	1.0 UJ	1.0	0.28	1.1 U	1.1	0.29	1.2 U	1.2	0.32	1.2 U	1.2	0.33
tert-Butylbenzene	---	1.2 U	1.2	0.35	1.0 UJ	1.0	0.31	1.1 U	1.1	0.32	1.2 U	1.2	0.36	1.2 U	1.2	0.36
sec-Butylbenzene	---	1.2 U	1.2	0.28	1.0 UJ	1.0	0.24	1.1 U	1.1	0.25	1.2 U	1.2	0.28	1.2 U	1.2	0.28
4-Isopropyltoluene	---	1.2 U	1.2	0.27	1.0 UJ	1.0	0.24	1.1 U	1.1	0.25	1.2 U	1.2	0.27	1.2 U	1.2	0.28
n-Butylbenzene	27,000	1.2 U	1.2	0.30	1.0 UJ	1.0	0.27	1.1 U	1.1	0.28	1.2 U	1.2	0.30	1.2 U	1.2	0.31
1,2,4-Trichlorobenzene	80	5.8 U	5.8	0.38	5.1 UJ	5.1	0.34	5.3 U	5.3	0.35	5.8 U	5.8	0.39	5.9 U	5.9	0.39
Naphthalene	2,100	5.8 U	5.8	0.50	**2.3** J, J1	5.1	0.44	**1.4** J, J1	5.3	0.45	5.8 U	5.8	0.50	5.9 U	5.9	0.51
1,2,3-Trichlorobenzene	---	5.8 U	5.8	0.35	5.1 UJ	5.1	0.31	5.3 U	5.3	0.32	5.8 U	5.8	0.35	5.9 U	5.9	0.36
SEMIVOLATILES (µg/kg)																
Method SW8270D																
Phenol	1,900,000	19 U	19	8.3	19 U	19	8.3	19 U	19	8.4	19 U	19	8.3	19 U	19	8.0
Bis-(2-Chloroethyl) Ether	---	19 U	19	3.2	19 U	19	3.2	19 U	19	3.3	19 U	19	3.2	19 U	19	3.1
2-Chlorophenol	---	19 U	19	2.3	19 U	19	2.3	19 U	19	2.3	19 U	19	2.3	19 U	19	2.2
1,3-Dichlorobenzene	3,840	19 U	19	2.5	19 U	19	2.5	19 U	19	2.6	19 U	19	2.5	19 U	19	2.4
1,4-Dichlorobenzene	3,500	19 U	19	2.7	19 U	19	2.7	19 U	19	2.8	19 U	19	2.7	19 U	19	2.7
Benzyl Alcohol	8,000,000	19 U	19	5.8	19 U	19	5.8	19 U	19	5.9	19 U	19	5.8	19 U	19	5.7
1,2-Dichlorobenzene	68,000	19 U	19	2.4	19 U	19	2.4	19 U	19	2.4	19 U	19	2.4	19 U	19	2.3
2-Methylphenol	250,000	19 U	19	5.0	19 U	19	5.0	19 U	19	5.1	19 U	19	5.0	19 U	19	4.9
2,2'-Oxybis(1-Chloropropane)	---	19 U	19	3.6	19 U	19	3.6	19 U	19	3.7	19 U	19	3.6	19 U	19	3.5
4-Methylphenol	41,000	38 U	38	6.3	38 U	38	6.3	39 U	39	6.4	38 U	38	6.3	37 U	37	6.2
N-Nitroso-Di-N-Propylamine	---	19 U	19	3.2	19 U	19	3.2	19 U	19	3.3	19 U	19	3.2	19 U	19	3.1
Hexachloroethane	---	19 U	19	2.8	19 U	19	2.8	19 U	19	2.9	19 U	19	2.8	19 U	19	2.7
Nitrobenzene	---	19 U	19	3.9	19 U	19	3.9	19 U	19	3.9	19 U	19	3.9	19 U	19	3.8
Isophorone	---	19 U	19	2.7	19 U	19	2.7	19 U	19	2.8	19 U	19	2.7	19 U	19	2.7
2-Nitrophenol	---	96 U	96	37	96 U	96	37	97 U	97	38	95 U	95	37	93 U	93	36
2,4-Dimethylphenol	95,000	38 U	38	3.3	38 U	38	3.3	39 U	39	3.4	38 UJ	38	3.3	37 UJ	37	3.2
Benzoic Acid	9,000	380 U	380	96	380 U	380	96	390 U	390	98	380 U	380	96	370 U	370	94
bis(2-Chloroethoxy) Methane	---	19 U	19	1.9	19 U	19	1.9	19 U	19	1.9	19 U	19	1.9	19 U	19	1.9
2,4-Dichlorophenol	---	190 U	190	21	190 U	190	21	190 U	190	21	190 U	190	21	190 U	190	20
1,2,4-Trichlorobenzene	80	19 U	19	3.3	19 U	19	3.3	19 U	19	3.4	19 U	19	3.3	19 U	19	3.2
Naphthalene	2,100	19 U	19	2.6	**96**	19	2.6	**32**	19	2.7	19 U	19	2.6	19 U	19	2.6
4-Chloroaniline	---	260 U	260	21	260 UJ	260	21	260 U	260	22	260 U	260	21	250 UJ	250	21
Hexachlorobutadiene	---	96 U	96	4.4	96 U	96	4.4	97 U	97	4.4	95 U	95	4.4	93 U	93	4.2
4-Chloro-3-methylphenol	740,000	96 U	96	14	96 U	96	14	97 U	97	15	95 U	95	14	93 U	93	14
2-Methylnaphthalene	320,000	19 U	19	2.9	**59**	19	2.9	**39**	19	3.0	19 U	19	2.9	19 U	19	2.8
Hexachlorocyclopentadiene	---	380 UJ	380	63	380 U	380	63	390 U	390	64	380 U	380	63	370 U	370	62
2,4,6-Trichlorophenol	---	96 U	96	21	96 U	96	21	97 U	97	22	95 U	95	21	93 U	93	21
2,4,5-Trichlorophenol	---	96 U	96	20	96 U	96	20	97 U	97	21	95 U	95	20	93 U	93	20
2-Chloronaphthalene	---	19 U	19	2.5	19 U	19	2.5	19 U	19	2.6	19 U	19	2.5	19 U	19	2.5
2-Nitroaniline	---	96 U	96	18	96 U	96	18	97 U	97	18	95 U	95	18	93 U	93	17
Dimethylphthalate	71	19 U	19	2.8	19 U	19	2.8	19 U	19	2.8	19 U	19	2.8	19 U	19	2.7
Acenaphthylene	---	19 U	19	5.5	19 U	19	5.5	19 U	19	5.5	19 U	19	5.4	19 U	19	5.3
3-Nitroaniline	---	96 U	96	21	96 U	96	21	97 U	97	22	95 U	95	21	93 U	93	21
Acenaphthene	230,000	19 U	19	3.1	**57**	19	3.1	**27**	19	3.2	19 U	19	3.1	19 U	19	3.0
2,4-Dinitrophenol	---	810 U	810	110	810 U	810	110	820 U	820	110	810 U	810	110	790 U	790	100
4-Nitrophenol	---	96 UJ	96	33	96 U	96	33	97 U	97	34	95 U	95	33	93 U	93	32
Dibenzofuran	80,000	19 U	19	3.9	**58**	19	3.9	**32**	19	4.0	19 U	19	3.9	19 U	19	3.8
2,6-Dinitrotoluene	---	96 U	96	29	96 U	96	29	97 U	97	30	95 U	95	29	93 U	93	28

TABLE M-3
MONITORING WELL BORINGS SOIL ANALYTICAL RESULTS
BOEING ISAACSON-THOMPSON
REMEDIAL INVESTIGATION

	Preliminary Cleanup Level	IT-MW-11(5-6.5) TU65G 10/31/2011			IT-MW-11(8-9.5) TV99D 11/07/2011			IT-MW-11(13.5-15) TV99E 11/07/2011			IT-MW-12(2-3.5) TV61A 11/03/2011			IT-MW-12(5-6.5) TV61K 11/03/2011		
		Result	Reporting Limit	Detection Limit	Result	Reporting Limit	Detection Limit	Result	Reporting Limit	Detection Limit	Result	Reporting Limit	Detection Limit	Result	Reporting Limit	Detection Limit
2,4-Dinitrotoluene	---	96 U	96	19	96 U	96	19	97 U	97	19	95 U	95	19	93 U	93	18
Diethylphthalate	178,000	48 U	48	35	48 U	48	35	48 U	48	36	48 U	48	35	46 U	46	34
4-Chlorophenyl-phenylether	---	19 U	19	5.1	19 U	19	5.1	19 U	19	5.1	19 U	19	5.0	19 U	19	4.9
Fluorene	150,000	19 U	19	4.2	**74** J	19	4.2	**32** J	19	4.2	19 U	19	4.2	19 U	19	4.0
4-Nitroaniline	---	96 U	96	36	96 U	96	36	97 U	97	37	95 U	95	36	93 U	93	35
4,6-Dinitro-2-Methylphenol	---	190 U	190	20	190 U	190	20	190 U	190	21	190 U	190	20	190 U	190	20
N-Nitrosodiphenylamine	204,000	19 U	19	5.1	19 U	19	5.1	19 U	19	5.2	19 U	19	5.1	19 U	19	5.0
4-Bromophenyl-phenylether	---	19 U	19	4.8	19 U	19	4.8	19 U	19	4.9	19 U	19	4.8	19 U	19	4.7
Hexachlorobenzene	---	19 U	19	4.1	19 U	19	4.1	19 U	19	4.2	19 U	19	4.1	19 U	19	4.0
Pentachlorophenol	---	190 UJ	190	46	190 U	190	46	190 U	190	47	190 U	190	46	190 U	190	45
Phenanthrene	---	19 U	19	3.5	**220**	19	3.5	**65**	19	3.5	19 U	19	3.5	19 U	19	3.4
Carbazole	50,000	19 U	19	2.6	**23**	19	2.6	19 U	19	2.6	19 UJ	19	2.6	19 UJ	19	2.5
Anthracene	1,600,000	19 U	19	4.3	**31**	19	4.3	**16** J1	19	4.4	19 U	19	4.3	19 U	19	4.2
Di-n-Butylphthalate	26,000	19 U	19	7.8	19 U	19	7.8	19 U	19	7.9	19 U	19	7.8	19 U	19	7.6
Fluoranthene	230,000	19 U	19	2.8	**160**	19	2.8	**56**	19	2.8	19 U	19	2.8	19 U	19	2.7
Pyrene	240,000	19 U	19	1.9	**170** J	19	1.9	**68** J	19	1.9	19 U	19	1.9	19 U	19	1.8
Butylbenzylphthalate	1,700	19 U	19	5.9	19 U	19	5.9	19 U	19	6.0	19 U	19	5.9	19 U	19	5.7
3,3'-Dichlorobenzidine	---	140 UJ	140	17	140 UJ	140	17	150 UJ	150	17	140 UJ	140	17	140 UJ	140	17
Benzo(a)anthracene	---	19 U	19	3.1	**54**	19	3.1	**16** J1	19	3.2	19 U	19	3.1	19 U	19	3.1
bis(2-Ethylhexyl)phthalate	56,600	28 U	24	14	25 U	24	14	100 U	24	14	26 U	24	14	23 U	23	14
Chrysene	---	19 U	19	3.6	**63**	19	3.6	**23**	19	3.6	19 U	19	3.6	**9.3** J1	19	3.5
Di-n-Octyl phthalate	---	19 U	19	5.6	19 U	19	5.6	19 U	19	5.7	19 U	19	5.6	19 U	19	5.4
Benzo(a)pyrene	---	19 U	19	5.2	**48**	19	5.2	**18** J1	19	5.3	19 U	19	5.2	19 U	19	5.1
Indeno(1,2,3-cd)pyrene	---	19 U	19	4.5	**22**	19	4.5	19 U	19	4.5	19 U	19	4.5	19 U	19	4.3
Dibenz(a,h)anthracene	---	19 U	19	4.1	19 U	19	4.1	19 U	19	4.2	19 U	19	4.1	19 U	19	4.0
Benzo(g,h,i)perylene	---	19 U	19	4.2	**31**	19	4.2	19 U	19	4.3	19 U	19	4.2	19 U	19	4.1
1-Methylnaphthalene	16,000	19 U	19	2.6	**29**	19	2.6	**36**	19	2.6	19 U	19	2.6	19 U	19	2.5
Total Benzofluoranthenes	---	19 U	19	2.6	**79**	19	2.6	**23**	19	2.7	19 U	19	2.6	19 U	19	2.6
cPAH TEQ	15	ND	NA	NA	**64**	NA	NA	**22** J	NA	NA	ND	NA	NA	**0.09** J	NA	NA
PAHs (µg/kg)																
Method SW8270D-SIM																
Naphthalene	2,100	4.8 U	4.8	2.5	**66**	4.7	2.5	**25**	4.8	2.5	4.8 U	4.8	2.5	4.6 U	4.6	2.4
2-Methylnaphthalene	320,000	4.8 U	4.8	1.4	**45**	4.7	1.4	**21**	4.8	1.5	**2.6** J1	4.8	1.4	4.6 U	4.6	1.4
1-Methylnaphthalene	16,000	4.8 U	4.8	1.6	**24**	4.7	1.6	**18**	4.8	1.6	4.8 U	4.8	1.6	4.6 U	4.6	1.6
Total Naphthalenes	---	4.8 U	NA	NA	**135**	NA	NA	**64**	NA	NA	**2.6** J1	NA	NA	4.6 U	NA	NA
Acenaphthylene	---	4.8 U	4.8	1.2	4.7 U	4.7	1.2	4.8 U	4.8	1.2	4.8 U	4.8	1.2	4.6 U	4.6	1.2
Acenaphthene	230,000	4.8 U	4.8	1.3	**57**	4.7	1.2	**24**	4.8	1.3	4.8 U	4.8	1.3	4.6 U	4.6	1.2
Fluorene	150,000	4.8 U	4.8	1.2	**61**	4.7	1.2	**30**	4.8	1.2	4.8 U	4.8	1.2	4.6 U	4.6	1.2
Phenanthrene	---	**2.5** J1	4.8	1.9	**170**	4.7	1.9	**66**	4.8	1.9	**3.3** J1	4.8	1.9	**3.4** J1	4.6	1.8
Anthracene	1,600,000	4.8 U	4.8	1.4	**31**	4.7	1.4	**18**	4.8	1.4	4.8 U	4.8	1.4	4.6 U	4.6	1.3
Fluoranthene	230,000	**2.7** J1	4.8	1.7	**130**	4.7	1.7	**64**	4.8	1.7	4.8 U	4.8	1.7	4.6 U	4.6	1.6
Pyrene	240,000	**3.4** J1	4.8	2.1	**100**	4.7	2.1	**50**	4.8	2.1	4.8 U	4.8	2.1	4.6 U	4.6	2.0
Benzo(a)anthracene	---	4.8 U	4.8	1.5	**40**	4.7	1.5	**17**	4.8	1.5	4.8 U	4.8	1.5	4.6 U	4.6	1.5
Chrysene	---	4.8 U	4.8	1.8	**48**	4.7	1.8	**22**	4.8	1.8	**3.7** J1	4.8	1.8	**2.7** J1	4.6	1.7
Benzo(a)pyrene	---	4.8 U	4.8	1.7	**37**	4.7	1.7	**20**	4.8	1.7	4.8 U	4.8	1.7	4.6 U	4.6	1.6
Indeno(1,2,3-cd)pyrene	---	4.8 U	4.8	3.3	**18**	4.7	3.3	**8.3**	4.8	3.3	4.8 U	4.8	3.3	4.6 U	4.6	3.2
Dibenz(a,h)anthracene	---	4.8 U	4.8	2.3	**7.2**	4.7	2.2	**3.4** J1	4.8	2.3	4.8 U	4.8	2.3	4.6 U	4.6	2.2
Benzo(g,h,i)perylene	---	4.8 U	4.8	2.9	**22**	4.7	2.9	**11**	4.8	2.9	**3.4** J1	4.8	2.9	4.6 U	4.6	2.8
Dibenzofuran	80,000	4.8 U	4.8	1.4	**55**	4.7	1.4	**27**	4.8	1.5	4.8 U	4.8	1.4	4.6 U	4.6	1.4
Total Benzofluoranthenes	---	4.8 U	4.8	1.8	**61**	4.7	1.7	**26**	4.8	1.8	4.8 U	4.8	1.8	4.6 U	4.6	1.7
cPAH TEQ	15	ND	NA	NA	**50**	NA	NA	**26** J	NA	NA	**0.04** J	NA	NA	**0.03** J	NA	NA

TABLE M-3
MONITORING WELL BORINGS SOIL ANALYTICAL RESULTS
BOEING ISAACSON-THOMPSON
REMEDIAL INVESTIGATION

	Preliminary Cleanup Level	IT-MW-11(5-6.5) TU65G 10/31/2011			IT-MW-11(8-9.5) TV99D 11/07/2011			IT-MW-11(13.5-15) TV99E 11/07/2011			IT-MW-12(2-3.5) TV61A 11/03/2011			IT-MW-12(5-6.5) TV61K 11/03/2011		
		Result	Reporting Limit	Detection Limit	Result	Reporting Limit	Detection Limit	Result	Reporting Limit	Detection Limit	Result	Reporting Limit	Detection Limit	Result	Reporting Limit	Detection Limit
PCBs (µg/kg)																
Method SW8082																
Aroclor 1016	0.72	32 U	32	2.0	31 U	31	1.9	32 U	32	1.9	31 U	31	1.9	32 U	32	2.0
Aroclor 1242	0.72	32 U	32	2.4	31 U	31	2.3	32 U	32	2.4	31 U	31	2.3	32 U	32	2.4
Aroclor 1248	220	32 U	32	2.4	31 U	31	2.3	32 U	32	2.4	31 U	31	2.3	32 U	32	2.4
Aroclor 1254	0.29	32 U	32	2.4	31 U	31	2.3	32 U	32	2.4	31 U	31	2.3	32 U	32	2.4
Aroclor 1260	5.4	32 U	32	2.4	31 U	31	2.3	32 U	32	2.4	31 U	31	2.3	32 U	32	2.4
Aroclor 1221	---	32 U	32	2.4	31 U	31	2.3	32 U	32	2.4	31 U	31	2.3	32 U	32	2.4
Aroclor 1232	---	32 U	32	2.4	31 U	31	2.3	32 U	32	2.4	31 U	31	2.3	32 U	32	2.4
Total PCBs	1.8	ND	NA	NA	ND	NA	NA	ND	NA	NA	ND	NA	NA	ND	NA	NA
TOTAL PETROLEUM HYDROCARBONS (mg/kg)																
NWTPH-Dx																
Diesel-Range Organics	2,000	5.2 U	5.2	1.3	**14**	5.6	1.4	**13**	6.1	1.6	5.4 U	5.4	1.4	5.2 U	5.2	1.3
Motor Oil-Range Organics	2,000	10 U	10	1.6	**42**	11	1.8	**26**	12	1.9	**19**	11	1.7	10 U	10	1.6
NWTPH-G																
Gasoline-Range Organics	100/30	5.1 U	5.1	2.4	**11**	7.1	3.4	7.3 U	7.3	3.5	6.1 U	6.1	2.9	6.8 U	6.8	3.3
TOTAL METALS (mg/kg)																
Methods 200.8/7471A/SW7196A																
Antimony	5	0.2 U	0.2	0.013	0.2 U	0.2	0.014	0.2 U	0.2	0.016	0.2 U	0.2	0.013	0.2 U	0.2	0.013
Arsenic	7	**2.9**	0.2	0.086	**7.8**	0.2	0.095	**3.7**	0.2	0.11	**1.9**	0.2	0.090	**1.4**	0.2	0.090
Barium	640	**51.4**	0.5	0.055	**51.4**	0.5	0.061	**47.6**	0.6	0.069	**47.1**	0.5	0.058	**38.6**	0.5	0.058
Beryllium	160	**0.2**	0.2	0.018	**0.2**	0.2	0.020	0.2 U	0.2	0.022	**0.2**	0.2	0.019	0.2 U	0.2	0.019
Cadmium	1.3	0.1 U	0.1	0.012	**0.2**	0.1	0.013	**0.2**	0.1	0.015	0.1 U	0.1	0.012	0.1 U	0.1	0.012
Chromium	1,480	**18.9**	0.5	0.038	**17.3**	0.5	0.041	**13.3**	0.6	0.047	**28.1**	0.5	0.039	**23.1**	0.5	0.039
Chromium VI	3.8	0.431 U	0.431	0.030	0.432 UJ	0.432	0.030	0.493 U	0.493	0.030	**0.524**	0.437	0.030	0.413 U	0.413	0.030
Copper	36	**15.2**	0.5	0.036	**39.3**	0.5	0.039	**17.6**	0.6	0.044	**13.1**	0.5	0.037	**10.2**	0.5	0.037
Lead	250	**2.5**	0.1	0.046	**11.4**	0.1	0.051	**4.2**	0.1	0.058	**4.2**	0.1	0.049	**1.7**	0.1	0.049
Mercury	1.5	0.02 U	0.02	0.0011	**0.14**	0.02	0.0011	**0.04**	0.03	0.0014	0.02 U	0.02	0.0012	0.02 U	0.02	0.0011
Nickel	210	**26.4**	0.5	0.048	**24.0**	0.5	0.053	**13.2**	0.6	0.060	**42.5**	0.5	0.051	**40.9**	0.5	0.051
Selenium	1.0	0.5 U	0.5	0.098	0.5 U	0.5	0.11	0.6 U	0.6	0.12	0.5 U	0.5	0.10	0.5 U	0.5	0.10
Silver	170	0.2 U	0.2	0.0079	0.2 U	0.2	0.0087	0.2 U	0.2	0.0099	0.2 U	0.2	0.0083	0.2 U	0.2	0.0083
Thallium	0.67	0.2 U	0.2	0.0030	0.2 U	0.2	0.0033	0.2 U	0.2	0.0037	0.2 U	0.2	0.0031	0.2 U	0.2	0.0031
Zinc	1,400	**34**	4	0.33	**63**	4	0.37	**39**	5	0.42	**35**	4	0.35	**28**	4	0.35

TABLE M-3
MONITORING WELL BORINGS SOIL ANALYTICAL RESULTS
BOEING ISAACSON-THOMPSON
REMEDIAL INVESTIGATION

	Preliminary Cleanup Level	IT-MW-12(8-9.5) TV61B 11/03/2011			IT-MW-12(13-14.5) TV61C 11/03/2011			IT-MW-12(18-19.5) TV61D 11/03/2011			IT-MW-12(23-24.5) TV61E 11/03/2011			IT-MW-13(2-3.5) TV61F 11/03/2011		
		Result	Reporting Limit	Detection Limit	Result	Reporting Limit	Detection Limit	Result	Reporting Limit	Detection Limit	Result	Reporting Limit	Detection Limit	Result	Reporting Limit	Detection Limit
VOLATILES (µg/kg)																
Method SW8260C																
Chloromethane	1,600	1.1 U	1.1	0.28	1.3 U	1.3	0.35	1.3 U	1.3	0.33	1.2 U	1.2	0.32	1.4 U	1.4	0.36
Bromomethane	---	1.1 U	1.1	0.20	1.3 U	1.3	0.25	1.3 U	1.3	0.24	1.2 U	1.2	0.23	1.4 U	1.4	0.26
Vinyl Chloride	7.4	1.1 U	1.1	0.25	1.3 U	1.3	0.31	1.3 U	1.3	0.30	1.2 U	1.2	0.29	1.4 U	1.4	0.32
Chloroethane	280,000	1.1 U	1.1	0.49	1.3 U	1.3	0.61	1.3 U	1.3	0.59	1.2 U	1.2	0.57	1.4 U	1.4	0.63
Methylene Chloride	2400	**3.0**	2.1	0.67	**5.5**	2.6	0.84	**3.1**	2.5	0.81	**2.4** J1	2.5	0.78	**4.6**	2.7	0.87
Acetone	510,000	**18**	5.3	0.51	**13**	6.6	0.64	**28**	6.3	0.61	**27**	6.2	0.60	**37**	6.8	0.66
Carbon Disulfide	75,000	1.1 U	1.1	0.59	**1.4**	1.3	0.74	**7.0**	1.3	0.71	**6.1**	1.2	0.69	**4.1**	1.4	0.76
1,1-Dichloroethene	81	1.1 U	1.1	0.36	1.3 U	1.3	0.44	1.3 U	1.3	0.43	1.2 U	1.2	0.41	1.4 U	1.4	0.46
1,1-Dichloroethane	710	1.1 U	1.1	0.22	1.3 U	1.3	0.27	1.3 U	1.3	0.26	1.2 U	1.2	0.25	1.4 U	1.4	0.28
trans-1,2-Dichloroethene	19,000	1.1 U	1.1	0.28	1.3 U	1.3	0.35	1.3 U	1.3	0.34	1.2 U	1.2	0.33	1.4 U	1.4	0.36
cis-1,2-Dichloroethene	2,600	1.1 U	1.1	0.25	1.3 U	1.3	0.32	1.3 U	1.3	0.30	1.2 U	1.2	0.30	1.4 U	1.4	0.33
Chloroform	200	1.1 U	1.1	0.25	1.3 U	1.3	0.31	1.3 U	1.3	0.30	1.2 U	1.2	0.29	1.4 U	1.4	0.32
1,2-Dichloroethane	70	1.1 U	1.1	0.20	1.3 U	1.3	0.25	1.3 U	1.3	0.24	1.2 U	1.2	0.24	1.4 U	1.4	0.26
2-Butanone	430,000	5.3 U	5.3	0.54	6.6 U	6.6	0.68	6.3 U	6.3	0.65	6.2 U	6.2	0.63	**3.7** J1	6.8	0.70
1,1,1-Trichloroethane	1,900,000	1.1 U	1.1	0.24	1.3 U	1.3	0.30	1.3 U	1.3	0.29	1.2 U	1.2	0.28	1.4 U	1.4	0.31
Carbon Tetrachloride	21	1.1 U	1.1	0.23	1.3 U	1.3	0.28	1.3 U	1.3	0.27	1.2 U	1.2	0.26	1.4 U	1.4	0.29
Vinyl Acetate	---	5.3 U	5.3	0.40	6.6 U	6.6	0.50	6.3 U	6.3	0.48	6.2 U	6.2	0.47	6.8 U	6.8	0.52
Bromodichloromethane	89	1.1 U	1.1	0.27	1.3 U	1.3	0.34	1.3 U	1.3	0.32	1.2 U	1.2	0.31	1.4 U	1.4	0.35
1,2-Dichloropropane	92	1.1 U	1.1	0.17	1.3 U	1.3	0.21	1.3 U	1.3	0.21	1.2 U	1.2	0.20	1.4 U	1.4	0.22
cis-1,3-Dichloropropene	---	1.1 U	1.1	0.24	1.3 U	1.3	0.30	1.3 U	1.3	0.29	1.2 U	1.2	0.28	1.4 U	1.4	0.31
Trichloroethene	51	1.1 U	1.1	0.23	1.3 U	1.3	0.28	1.3 U	1.3	0.27	1.2 U	1.2	0.26	1.4 U	1.4	0.29
Dibromochloromethane	---	1.1 U	1.1	0.28	1.3 U	1.3	0.35	1.3 U	1.3	0.34	1.2 U	1.2	0.33	1.4 U	1.4	0.36
1,1,2-Trichloroethane	73	1.1 U	1.1	0.30	1.3 U	1.3	0.38	1.3 U	1.3	0.36	1.2 U	1.2	0.35	1.4 U	1.4	0.39
Benzene	93	1.1 U	1.1	0.31	1.3 U	1.3	0.39	**0.9** J1	1.3	0.38	1.2 U	1.2	0.37	1.4 U	1.4	0.40
trans-1,3-Dichloropropene	---	1.1 U	1.1	0.23	1.3 U	1.3	0.28	1.3 U	1.3	0.27	1.2 U	1.2	0.27	1.4 U	1.4	0.30
2-Chloroethylvinylether	---	5.3 U	5.3	0.29	6.6 U	6.6	0.36	6.3 U	6.3	0.35	6.2 U	6.2	0.34	6.8 U	6.8	0.38
Bromoform	---	1.1 U	1.1	0.32	1.3 U	1.3	0.39	1.3 U	1.3	0.38	1.2 U	1.2	0.37	1.4 U	1.4	0.41
4-Methyl-2-Pentanone (MIBK)	170,000	5.3 U	5.3	0.45	6.6 U	6.6	0.55	6.3 U	6.3	0.53	6.2 U	6.2	0.52	6.8 U	6.8	0.57
2-Hexanone	32,000	5.3 U	5.3	0.47	6.6 U	6.6	0.58	6.3 U	6.3	0.56	6.2 U	6.2	0.54	6.8 U	6.8	0.60
Tetrachloroethene	260	1.1 U	1.1	0.27	1.3 U	1.3	0.34	1.3 U	1.3	0.33	1.2 U	1.2	0.32	1.4 U	1.4	0.35
1,1,2,2-Tetrachloroethane	13	1.1 U	1.1	0.27	1.3 U	1.3	0.33	1.3 U	1.3	0.32	1.2 U	1.2	0.31	1.4 U	1.4	0.35
Toluene	100,000	1.1 U	1.1	0.16	1.3 U	1.3	0.20	1.3 U	1.3	0.19	1.2 U	1.2	0.19	1.4 U	1.4	0.21
Chlorobenzene	26,000	1.1 U	1.1	0.23	1.3 U	1.3	0.29	1.3 U	1.3	0.28	1.2 U	1.2	0.27	1.4 U	1.4	0.30
Ethylbenzene	230	1.1 U	1.1	0.21	1.3 U	1.3	0.27	1.3 U	1.3	0.26	1.2 U	1.2	0.25	1.4 U	1.4	0.28
Styrene	16,000,000	1.1 U	1.1	0.15	1.3 U	1.3	0.18	1.3 U	1.3	0.18	1.2 U	1.2	0.17	1.4 U	1.4	0.19
Trichlorofluoromethane	200,000	1.1 U	1.1	0.28	1.3 U	1.3	0.35	1.3 U	1.3	0.34	1.2 U	1.2	0.33	1.4 U	1.4	0.36
1,1,2-Trichloro-1,2,2-trifuoroethane	1,000,000,000	2.1 U	2.1	0.30	2.6 U	2.6	0.38	2.5 U	2.5	0.36	2.5 U	2.5	0.35	2.7 U	2.7	0.39
m,p-Xylene	160,000	1.1 U	1.1	0.42	1.3 U	1.3	0.52	1.3 U	1.3	0.50	1.2 U	1.2	0.48	**7.4**	1.4	0.54
o-Xylene	200,000	1.1 U	1.1	0.24	1.3 U	1.3	0.30	1.3 U	1.3	0.28	1.2 U	1.2	0.28	**7.3**	1.4	0.31
1,2-Dichlorobenzene	68,000	1.1 U	1.1	0.31	1.3 U	1.3	0.39	1.3 U	1.3	0.37	1.2 U	1.2	0.36	1.4 U	1.4	0.40
1,3-Dichlorobenzene	3,840	1.1 U	1.1	0.24	1.3 U	1.3	0.30	1.3 U	1.3	0.29	1.2 U	1.2	0.28	1.4 U	1.4	0.31
1,4-Dichlorobenzene	3,500	1.1 U	1.1	0.25	1.3 U	1.3	0.31	1.3 U	1.3	0.29	1.2 U	1.2	0.29	1.4 U	1.4	0.32
Acrolein	---	53 U	53	4.0	66 U	66	5.0	63 U	63	4.8	62 U	62	4.7	68 U	68	5.2
Methyl Iodide	---	1.1 U	1.1	0.23	1.3 U	1.3	0.28	**0.8** J1	1.3	0.27	1.2 U	1.2	0.27	1.4 U	1.4	0.29
Bromoethane	---	2.1 U	2.1	0.47	2.6 U	2.6	0.58	2.5 U	2.5	0.56	2.5 U	2.5	0.54	2.7 U	2.7	0.60
Acrylonitrile	---	5.3 U	5.3	1.1	6.6 U	6.6	1.4	6.3 U	6.3	1.3	6.2 U	6.2	1.3	6.8 U	6.8	1.4
1,1-Dichloropropene	---	1.1 U	1.1	0.33	1.3 U	1.3	0.41	1.3 U	1.3	0.40	1.2 U	1.2	0.39	1.4 U	1.4	0.43
Dibromomethane	---	1.1 U	1.1	0.16	1.3 U	1.3	0.19	1.3 U	1.3	0.19	1.2 U	1.2	0.18	1.4 U	1.4	0.20
1,1,1,2-Tetrachloroethane	---	1.1 U	1.1	0.25	1.3 U	1.3	0.31	1.3 U	1.3	0.30	1.2 U	1.2	0.29	1.4 U	1.4	0.32
1,2-Dibromo-3-chloropropane	---	5.3 U	5.3	0.62	6.6 U	6.6	0.77	6.3 U	6.3	0.74	6.2 U	6.2	0.72	6.8 U	6.8	0.80
1,2,3-Trichloropropane	---	2.1 U	2.1	0.55	2.6 U	2.6	0.68	2.5 U	2.5	0.66	2.5 U	2.5	0.64	2.7 U	2.7	0.71
trans-1,4-Dichloro-2-butene	---	5.3 U	5.3	0.46	6.6 U	6.6	0.58	6.3 U	6.3	0.55	6.2 U	6.2	0.54	6.8 U	6.8	0.60
1,3,5-Trimethylbenzene	800,000	1.1 U	1.1	0.27	1.3 U	1.3	0.34	1.3 U	1.3	0.32	1.2 U	1.2	0.31	**14**	1.4	0.35
1,2,4-Trimethylbenzene	800,000	1.1 U	1.1	0.24	1.3 U	1.3	0.30	1.3 U	1.3	0.29	1.2 U	1.2	0.28	**16**	1.4	0.31
Hexachlorobutadiene	---	5.3 U	5.3	0.44	6.6 U	6.6	0.54	6.3 U	6.3	0.52	6.2 U	6.2	0.51	6.8 U	6.8	0.56

TABLE M-3
MONITORING WELL BORINGS SOIL ANALYTICAL RESULTS
BOEING ISAACSON-THOMPSON
REMEDIAL INVESTIGATION

	Preliminary Cleanup Level	IT-MW-12(8-9.5) TV61B 11/03/2011			IT-MW-12(13-14.5) TV61C 11/03/2011			IT-MW-12(18-19.5) TV61D 11/03/2011			IT-MW-12(23-24.5) TV61E 11/03/2011			IT-MW-13(2-3.5) TV61F 11/03/2011		
		Result	Reporting Limit	Detection Limit	Result	Reporting Limit	Detection Limit	Result	Reporting Limit	Detection Limit	Result	Reporting Limit	Detection Limit	Result	Reporting Limit	Detection Limit
Ethylene Dibromide	---	1.1 U	1.1	0.19	1.3 U	1.3	0.23	1.3 U	1.3	0.22	1.2 U	1.2	0.22	1.4 U	1.4	0.24
Bromochloromethane	---	1.1 U	1.1	0.34	1.3 U	1.3	0.43	1.3 U	1.3	0.41	1.2 U	1.2	0.40	1.4 U	1.4	0.44
2,2-Dichloropropane	---	1.1 U	1.1	0.31	1.3 U	1.3	0.39	1.3 U	1.3	0.37	1.2 U	1.2	0.36	1.4 U	1.4	0.40
1,3-Dichloropropane	---	1.1 U	1.1	0.22	1.3 U	1.3	0.28	1.3 U	1.3	0.27	1.2 U	1.2	0.26	1.4 U	1.4	0.29
Isopropylbenzene	78,000	1.1 U	1.1	0.25	1.3 U	1.3	0.31	1.3 U	1.3	0.30	1.2 U	1.2	0.29	1.4 U	1.4	0.32
n-Propylbenzene	11,000	1.1 U	1.1	0.29	1.3 U	1.3	0.36	1.3 U	1.3	0.35	1.2 U	1.2	0.34	1.4 U	1.4	0.37
Bromobenzene	---	1.1 U	1.1	0.16	1.3 U	1.3	0.20	1.3 U	1.3	0.19	1.2 U	1.2	0.19	1.4 U	1.4	0.21
2-Chlorotoluene	---	1.1 U	1.1	0.32	1.3 U	1.3	0.40	1.3 U	1.3	0.38	1.2 U	1.2	0.37	1.4 U	1.4	0.41
4-Chlorotoluene	400,000	1.1 U	1.1	0.29	1.3 U	1.3	0.37	1.3 U	1.3	0.35	1.2 U	1.2	0.34	1.4 U	1.4	0.38
tert-Butylbenzene	---	1.1 U	1.1	0.32	1.3 U	1.3	0.40	1.3 U	1.3	0.39	1.2 U	1.2	0.38	1.4 U	1.4	0.42
sec-Butylbenzene	---	1.1 U	1.1	0.25	1.3 U	1.3	0.32	1.3 U	1.3	0.30	1.2 U	1.2	0.30	1.4 U	1.4	0.33
4-Isopropyltoluene	---	1.1 U	1.1	0.25	1.3 U	1.3	0.31	1.3 U	1.3	0.30	1.2 U	1.2	0.29	**1.6** J	1.4	0.32
n-Butylbenzene	27,000	1.1 U	1.1	0.28	1.3 U	1.3	0.35	1.3 U	1.3	0.33	1.2 U	1.2	0.32	1.4 U	1.4	0.36
1,2,4-Trichlorobenzene	80	5.3 U	5.3	0.35	6.6 U	6.6	0.44	6.3 U	6.3	0.42	6.2 U	6.2	0.41	6.8 U	6.8	0.45
Naphthalene	2,100	5.3 U	5.3	0.46	6.6 U	6.6	0.57	6.3 U	6.3	0.54	6.2 U	6.2	0.53	6.8 U	6.8	0.59
1,2,3-Trichlorobenzene	---	5.3 U	5.3	0.32	6.6 U	6.6	0.40	6.3 U	6.3	0.39	6.2 U	6.2	0.38	6.8 U	6.8	0.42
SEMIVOLATILES (µg/kg)																
Method SW8270D																
Phenol	1,900,000	19 U	19	8.0	19 U	19	8.0	**35**	20	8.5	19 U	19	8.1	19 U	19	8.2
Bis-(2-Chloroethyl) Ether	---	19 U	19	3.1	19 U	19	3.1	20 U	20	3.3	19 U	19	3.2	19 U	19	3.2
2-Chlorophenol	---	19 U	19	2.2	19 U	19	2.2	20 U	20	2.3	19 U	19	2.3	19 U	19	2.3
1,3-Dichlorobenzene	3,840	19 U	19	2.4	19 U	19	2.4	20 U	20	2.6	19 U	19	2.5	19 U	19	2.5
1,4-Dichlorobenzene	3,500	19 U	19	2.7	19 U	19	2.7	20 U	20	2.8	19 U	19	2.7	19 U	19	2.7
Benzyl Alcohol	8,000,000	19 U	19	5.7	19 U	19	5.7	**41**	20	6.0	19 U	19	5.7	19 U	19	5.8
1,2-Dichlorobenzene	68,000	19 U	19	2.3	19 U	19	2.3	20 U	20	2.5	19 U	19	2.4	19 U	19	2.4
2-Methylphenol	250,000	19 U	19	4.9	19 U	19	4.9	20 U	20	5.2	19 U	19	4.9	19 U	19	5.0
2,2'-Oxybis(1-Chloropropane)	---	19 U	19	3.5	19 U	19	3.5	20 U	20	3.7	19 U	19	3.5	19 U	19	3.6
4-Methylphenol	41,000	37 U	37	6.2	37 U	37	6.2	**28** J1	39	6.5	**23** J1	38	6.2	38 U	38	6.3
N-Nitroso-Di-N-Propylamine	---	19 U	19	3.1	19 U	19	3.1	20 U	20	3.3	19 U	19	3.2	19 U	19	3.2
Hexachloroethane	---	19 U	19	2.7	19 U	19	2.7	20 U	20	2.9	19 U	19	2.8	19 U	19	2.8
Nitrobenzene	---	19 U	19	3.8	19 U	19	3.8	20 U	20	4.0	19 U	19	3.8	19 U	19	3.8
Isophorone	---	19 U	19	2.7	19 U	19	2.7	20 U	20	2.8	19 U	19	2.7	19 U	19	2.7
2-Nitrophenol	---	93 U	93	36	93 U	93	36	98 U	98	38	94 U	94	36	94 U	94	37
2,4-Dimethylphenol	95,000	37 UJ	37	3.2	37 UJ	37	3.2	**20** J, J1	39	3.4	38 UJ	38	3.3	38 UJ	38	3.3
Benzoic Acid	9,000	370 U	370	94	370 U	370	94	390 U	390	99	380 U	380	95	380 U	380	95
bis(2-Chloroethoxy) Methane	---	19 U	19	1.9	19 U	19	1.9	20 U	20	2.0	19 U	19	1.9	19 U	19	1.9
2,4-Dichlorophenol	---	190 U	190	20	190 U	190	20	200 U	200	21	190 U	190	20	190 U	190	20
1,2,4-Trichlorobenzene	80	19 U	19	3.2	19 U	19	3.2	20 U	20	3.4	19 U	19	3.3	19 U	19	3.3
Naphthalene	2,100	19 U	19	2.6	19 U	19	2.6	**54**	20	2.7	**58**	19	2.6	**41**	19	2.6
4-Chloroaniline	---	250 U	250	21	250 U	250	21	260 U	260	22	250 U	250	21	260 U	260	21
Hexachlorobutadiene	---	93 U	93	4.2	93 U	93	4.2	98 U	98	4.5	94 U	94	4.3	94 U	94	4.3
4-Chloro-3-methylphenol	740,000	93 U	93	14	93 U	93	14	98 U	98	15	94 U	94	14	94 U	94	14
2-Methylnaphthalene	320,000	19 U	19	2.8	19 U	19	2.8	**54**	20	3.0	**26**	19	2.9	**41**	19	2.9
Hexachlorocyclopentadiene	---	370 U	370	62	370 U	370	62	390 U	390	65	380 U	380	63	380 U	380	63
2,4,6-Trichlorophenol	---	93 U	93	21	93 U	93	21	98 U	98	22	94 U	94	21	94 U	94	21
2,4,5-Trichlorophenol	---	93 U	93	20	93 U	93	20	98 U	98	21	94 U	94	20	94 U	94	20
2-Chloronaphthalene	---	19 U	19	2.5	19 U	19	2.5	20 U	20	2.6	19 U	19	2.5	19 U	19	2.5
2-Nitroaniline	---	93 U	93	17	93 U	93	17	98 U	98	18	94 U	94	17	94 U	94	17
Dimethylphthalate	71	19 U	19	2.7	19 U	19	2.7	20 U	20	2.8	19 U	19	2.7	19 U	19	2.7
Acenaphthylene	---	19 U	19	5.3	19 U	19	5.3	20 U	20	5.6	**13** J1	19	5.4	19 U	19	5.4
3-Nitroaniline	---	93 U	93	21	93 U	93	21	98 U	98	22	94 U	94	21	94 U	94	21
Acenaphthene	230,000	19 U	19	3.0	19 U	19	3.0	**16** J1	20	3.2	**12** J1	19	3.1	**35**	19	3.1
2,4-Dinitrophenol	---	790 U	790	100	790 U	790	100	840 U	840	110	800 U	800	100	800 U	800	100
4-Nitrophenol	---	93 U	93	32	93 U	93	32	98 U	98	34	94 U	94	33	94 U	94	33
Dibenzofuran	80,000	19 U	19	3.8	19 U	19	3.8	**22**	20	4.0	**9.4** J1	19	3.9	**40**	19	3.9
2,6-Dinitrotoluene	---	93 U	93	28	93 U	93	28	98 U	98	30	94 U	94	29	94 U	94	29

TABLE M-3
MONITORING WELL BORINGS SOIL ANALYTICAL RESULTS
BOEING ISAACSON-THOMPSON
REMEDIAL INVESTIGATION

	Preliminary Cleanup Level	IT-MW-12(8-9.5) TV61B 11/03/2011			IT-MW-12(13-14.5) TV61C 11/03/2011			IT-MW-12(18-19.5) TV61D 11/03/2011			IT-MW-12(23-24.5) TV61E 11/03/2011			IT-MW-13(2-3.5) TV61F 11/03/2011		
		Result	Reporting Limit	Detection Limit	Result	Reporting Limit	Detection Limit	Result	Reporting Limit	Detection Limit	Result	Reporting Limit	Detection Limit	Result	Reporting Limit	Detection Limit
2,4-Dinitrotoluene	---	93 U	93	18	93 U	93	18	98 U	98	19	94 U	94	18	94 U	94	18
Diethylphthalate	178,000	46 U	46	34	46 U	46	34	49 U	49	36	47 U	47	34	47 U	47	35
4-Chlorophenyl-phenylether	---	19 U	19	4.9	19 U	19	4.9	20 U	20	5.2	19 U	19	5.0	19 U	19	5.0
Fluorene	150,000	19 U	19	4.0	19 U	19	4.0	**33** J	20	4.3	**15** J, J1	19	4.1	**78** J	19	4.1
4-Nitroaniline	---	93 U	93	35	93 U	93	35	98 U	98	37	94 U	94	36	94 U	94	36
4,6-Dinitro-2-Methylphenol	---	190 U	190	20	190 U	190	20	200 U	200	21	190 U	190	20	190 U	190	20
N-Nitrosodiphenylamine	204,000	19 U	19	5.0	19 U	19	5.0	20 U	20	5.3	19 U	19	5.1	19 U	19	5.1
4-Bromophenyl-phenylether	---	19 U	19	4.7	19 U	19	4.7	20 U	20	4.9	19 U	19	4.7	19 U	19	4.8
Hexachlorobenzene	---	19 U	19	4.0	19 U	19	4.0	20 U	20	4.2	19 U	19	4.0	19 U	19	4.1
Pentachlorophenol	---	190 U	190	45	190 U	190	45	200 U	200	48	190 U	190	46	190 U	190	46
Phenanthrene	---	19 U	19	3.4	19 U	19	3.4	**140**	20	3.6	**55**	19	3.4	**240**	19	3.4
Carbazole	50,000	19 UJ	19	2.5	19 UJ	19	2.5	20 UJ	20	2.6	19 UJ	19	2.5	**34** J	19	2.5
Anthracene	1,600,000	19 U	19	4.2	19 U	19	4.2	**24**	20	4.4	**11** J1	19	4.2	**45**	19	4.3
Di-n-Butylphthalate	26,000	19 U	19	7.6	19 U	19	7.6	**18** J1	20	8.0	19 U	19	7.7	19 U	19	7.7
Fluoranthene	230,000	19 U	19	2.7	19 U	19	2.7	**120**	20	2.9	**59**	19	2.7	**140**	19	2.8
Pyrene	240,000	19 U	19	1.8	19 U	19	1.8	**140**	20	1.9	**80**	19	1.8	**120**	19	1.8
Butylbenzylphthalate	1,700	19 U	19	5.7	19 U	19	5.7	20 U	20	6.0	19 U	19	5.8	19 U	19	5.8
3,3'-Dichlorobenzidine	---	140 UJ	140	17	140 UJ	140	17	150 UJ	150	17	140 UJ	140	17	140 UJ	140	17
Benzo(a)anthracene	---	19 U	19	3.1	19 U	19	3.1	**52**	20	3.2	**19**	19	3.1	**52**	19	3.1
bis(2-Ethylhexyl)phthalate	56,600	27 U	23	14	23 U	23	14	39 U	25	14	26 U	24	14	47 U	24	14
Chrysene	---	19 U	19	3.5	19 U	19	3.5	**82**	20	3.7	**23**	19	3.5	**83**	19	3.5
Di-n-Octyl phthalate	---	19 U	19	5.4	19 U	19	5.4	20 U	20	5.7	19 U	19	5.5	19 U	19	5.5
Benzo(a)pyrene	---	19 U	19	5.1	19 U	19	5.1	**46**	20	5.4	19 U	19	5.1	**53**	19	5.2
Indeno(1,2,3-cd)pyrene	---	19 U	19	4.3	19 U	19	4.3	**26**	20	4.6	19 U	19	4.4	**24**	19	4.4
Dibenz(a,h)anthracene	---	19 U	19	4.0	19 U	19	4.0	20 U	20	4.2	19 U	19	4.1	19 U	19	4.1
Benzo(g,h,i)perylene	---	19 U	19	4.1	19 U	19	4.1	**36**	20	4.3	19 U	19	4.1	19 U	19	4.2
1-Methylnaphthalene	16,000	19 U	19	2.5	19 U	19	2.5	**30**	20	2.6	**12** J1	19	2.5	**35**	19	2.5
Total Benzofluoranthenes	---	19 U	19	2.6	19 U	19	2.6	**80**	20	2.7	**29**	19	2.6	**80**	19	2.6
cPAH TEQ	15	ND	NA	NA	ND	NA	NA	**63**	NA	NA	**5**	NA	NA	**69**	NA	NA
PAHs (µg/kg)																
Method SW8270D-SIM																
Naphthalene	2,100	**2.7** J1	4.6	2.4	4.7 U	4.7	2.4	**55**	4.9	2.6	**54**	4.6	2.4	**42**	9.1	4.8
2-Methylnaphthalene	320,000	**3.4** J1	4.6	1.4	4.7 U	4.7	1.4	**51**	4.9	1.5	4.6 U	4.6	1.4	**44**	9.1	2.8
1-Methylnaphthalene	16,000	**2.3** J1	4.6	1.6	4.7 U	4.7	1.6	**35**	4.9	1.7	4.6 U	4.6	1.6	**39**	9.1	3.1
Total Naphthalenes	---	**8.4** J1	NA	NA	4.7 U	NA	NA	**141**	NA	NA	**54**	NA	NA	**125**	NA	NA
Acenaphthylene	---	4.6 U	4.6	1.2	4.7 U	4.7	1.2	4.9 U	4.9	1.2	4.6 U	4.6	1.2	9.1 U	9.1	2.3
Acenaphthene	230,000	4.6 U	4.6	1.2	4.7 U	4.7	1.2	**42**	4.9	1.3	**14**	4.6	1.2	**58**	9.1	2.4
Fluorene	150,000	4.6 U	4.6	1.2	4.7 U	4.7	1.2	**26**	4.9	1.3	**14**	4.6	1.2	**89**	9.1	2.3
Phenanthrene	---	**4.8**	4.6	1.8	4.7 U	4.7	1.8	**130**	4.9	2.0	**48**	4.6	1.8	**380**	9.1	3.6
Anthracene	1,600,000	4.6 U	4.6	1.3	4.7 U	4.7	1.4	**23**	4.9	1.4	**12**	4.6	1.4	**100**	9.1	2.6
Fluoranthene	230,000	4.6 U	4.6	1.6	4.7 U	4.7	1.6	**120**	4.9	1.7	**65**	4.6	1.6	**240**	9.1	3.2
Pyrene	240,000	**2.7** J1	4.6	2.0	4.7 U	4.7	2.1	**110**	4.9	2.2	**56**	4.6	2.1	**170**	9.1	4.0
Benzo(a)anthracene	---	4.6 U	4.6	1.5	4.7 U	4.7	1.5	**42**	4.9	1.6	**13**	4.6	1.5	**24**	9.1	2.9
Chrysene	---	**7.0**	4.6	1.7	4.7 U	4.7	1.8	**67**	4.9	1.9	**18**	4.6	1.7	**44**	9.1	3.4
Benzo(a)pyrene	---	4.6 U	4.6	1.6	4.7 U	4.7	1.6	**34**	4.9	1.7	**16**	4.6	1.6	**13**	9.1	3.2
Indeno(1,2,3-cd)pyrene	---	4.6 U	4.6	3.2	4.7 U	4.7	3.2	**19**	4.9	3.4	**6.9**	4.6	3.2	9.1 U	9.1	6.3
Dibenz(a,h)anthracene	---	4.6 U	4.6	2.2	4.7 U	4.7	2.2	**8.0**	4.9	2.3	4.6 U	4.6	2.2	9.1 U	9.1	4.3
Benzo(g,h,i)perylene	---	4.6 U	4.6	2.8	4.7 U	4.7	2.8	**27**	4.9	3.0	**9.3**	4.6	2.8	**14**	9.1	5.5
Dibenzofuran	80,000	4.6 U	4.6	1.4	4.7 U	4.7	1.4	**22**	4.9	1.5	**12**	4.6	1.4	**52**	9.1	2.7
Total Benzofluoranthenes	---	4.6 U	4.6	1.7	4.7 U	4.7	1.7	**64**	4.9	1.8	**31**	4.6	1.7	**39**	9.1	3.4
cPAH TEQ	15	**0.07**	NA	NA	ND	NA	NA	**48**	NA	NA	**21**	NA	NA	**20**	NA	NA

TABLE M-3
MONITORING WELL BORINGS SOIL ANALYTICAL RESULTS
BOEING ISAACSON-THOMPSON
REMEDIAL INVESTIGATION

	Preliminary Cleanup Level	IT-MW-12(8-9.5) TV61B 11/03/2011			IT-MW-12(13-14.5) TV61C 11/03/2011			IT-MW-12(18-19.5) TV61D 11/03/2011			IT-MW-12(23-24.5) TV61E 11/03/2011			IT-MW-13(2-3.5) TV61F 11/03/2011		
		Result	Reporting Limit	Detection Limit	Result	Reporting Limit	Detection Limit	Result	Reporting Limit	Detection Limit	Result	Reporting Limit	Detection Limit	Result	Reporting Limit	Detection Limit
PCBs (µg/kg)																
Method SW8082																
Aroclor 1016	0.72	32 U	32	1.9	32 U	32	2.0	32 U	32	2.0	33 U	33	2.0	32 U	32	1.9
Aroclor 1242	0.72	32 U	32	2.4	32 U	32	2.4	32 U	32	2.4	33 U	33	2.4	32 U	32	2.4
Aroclor 1248	220	32 U	32	2.4	32 U	32	2.4	96 U	96	2.4	33 U	33	2.4	32 U	32	2.4
Aroclor 1254	0.29	32 U	32	2.4	32 U	32	2.4	**210**	32	2.4	**40**	33	2.4	32 U	32	2.4
Aroclor 1260	5.4	32 U	32	2.4	32 U	32	2.4	**82**	32	2.4	33 U	33	2.4	32 U	32	2.4
Aroclor 1221	---	32 U	32	2.4	32 U	32	2.4	32 U	32	2.4	33 U	33	2.4	32 U	32	2.4
Aroclor 1232	---	32 U	32	2.4	32 U	32	2.4	32 U	32	2.4	33 U	33	2.4	32 U	32	2.4
Total PCBs	1.8	ND	NA	NA	ND	NA	NA	**292**	NA	NA	**40**	NA	NA	ND	NA	NA
TOTAL PETROLEUM HYDROCARBONS (mg/kg)																
NWTPH-Dx																
Diesel-Range Organics	2,000	5.6 U	5.6	1.4	5.9 U	5.9	1.5	**180**	32	8.1	**37**	6.6	1.7	**55**	11	2.9
Motor Oil-Range Organics	2,000	**39**	11	1.8	12 U	12	1.9	**400**	64	10	**66**	13	2.1	**200**	22	3.5
NWTPH-G																
Gasoline-Range Organics	100/30	5.4 U	5.4	2.6	6.9 U	6.9	3.3	**88**	8.1	3.9	10 U	10	4.8	**33**	5.7	2.7
TOTAL METALS (mg/kg)																
Methods 200.8/7471A/SW7196A																
Antimony	5	0.2 U	0.2	0.014	0.2 U	0.2	0.016	0.2 U	0.2	0.016	0.2 U	0.2	0.016	0.2 U	0.2	0.014
Arsenic	7	**2.3**	0.2	0.095	**1.7**	0.2	0.10	**92.0**	0.2	0.11	**22.7**	0.2	0.11	**2.7**	0.2	0.094
Barium	640	**63.7**	0.5	0.061	**45.0**	0.6	0.067	**87.8**	0.6	0.069	**45.7**	0.6	0.070	**46.4**	0.5	0.060
Beryllium	160	**0.2**	0.2	0.020	0.2 U	0.2	0.022	**0.3**	0.2	0.022	**0.3**	0.2	0.022	**0.2**	0.2	0.019
Cadmium	1.3	0.1 U	0.1	0.013	0.1 U	0.1	0.014	**1.9**	0.1	0.015	**0.3**	0.1	0.015	**0.1**	0.1	0.013
Chromium	1,480	**26.4**	0.5	0.042	**25.0**	0.6	0.045	**91**	3	0.23	**16.4**	0.6	0.047	**22**	3	0.20
Chromium VI	3.8	**0.528**	0.440	0.030	0.475 U	0.475	0.030	0.513 U	0.513	0.030	0.509 U	0.509	0.030	0.449 U	0.449	0.030
Copper	36	**14.5**	0.5	0.039	**10.9**	0.6	0.043	**53.8**	0.6	0.044	**20.0**	0.6	0.045	**19.9**	0.5	0.039
Lead	250	**2.3**	0.1	0.052	**1.9**	0.1	0.056	**169**	0.1	0.058	**9.7**	0.1	0.059	**6.0**	0.1	0.051
Mercury	1.5	0.02 U	0.02	0.0011	0.02 U	0.02	0.0012	**0.22**	0.03	0.0014	**0.05**	0.03	0.0016	**0.02**	0.02	0.0012
Nickel	210	**43.5**	0.5	0.054	**39.4**	0.6	0.059	**92.3**	0.6	0.060	**15.9**	0.6	0.061	**29.5**	0.5	0.053
Selenium	1.0	0.5 U	0.5	0.11	0.6 U	0.6	0.12	0.6 U	0.6	0.12	0.6 U	0.6	0.12	0.5 U	0.5	0.11
Silver	170	0.2 U	0.2	0.0088	0.2 U	0.2	0.0096	**0.6**	0.2	0.0099	0.2 U	0.2	0.010	0.2 U	0.2	0.0086
Thallium	0.67	0.2 U	0.2	0.0033	0.2 U	0.2	0.0036	0.2 U	0.2	0.0037	0.2 U	0.2	0.0037	0.2 U	0.2	0.0032
Zinc	1,400	**36**	4	0.37	**29**	5	0.41	**630**	20	2.1	**67**	5	0.42	**46**	4	0.37

TABLE M-3
MONITORING WELL BORINGS SOIL ANALYTICAL RESULTS
BOEING ISAACSON-THOMPSON
REMEDIAL INVESTIGATION

	Preliminary Cleanup Level	IT-MW-13(5-6.5) TV61G 11/03/2011			IT-MW-13(8-9.5) TV61H 11/03/2011			IT-MW-13(12.5-14) TV61I 11/03/2011			IT-MW-13(15-16.5) TV61J 11/03/2011			IT-MW-13B(2-3.5) TW45J 11/10/2011		
		Result	Reporting Limit	Detection Limit	Result	Reporting Limit	Detection Limit	Result	Reporting Limit	Detection Limit	Result	Reporting Limit	Detection Limit	Result	Reporting Limit	Detection Limit
VOLATILES (µg/kg)																
Method SW8260C																
Chloromethane	1,600	1.1 U	1.1	0.28	1.1 U	1.1	0.28	1.3 U	1.3	0.35	1.0 U	1.0	0.27	1.3 UJ	1.3	0.33
Bromomethane	---	1.1 U	1.1	0.20	1.1 U	1.1	0.20	1.3 U	1.3	0.25	1.0 U	1.0	0.19	1.3 UJ	1.3	0.24
Vinyl Chloride	7.4	1.1 U	1.1	0.25	1.1 U	1.1	0.25	1.3 U	1.3	0.31	1.0 U	1.0	0.24	1.3 U	1.3	0.30
Chloroethane	280,000	1.1 U	1.1	0.49	1.1 U	1.1	0.49	1.3 U	1.3	0.62	1.0 U	1.0	0.47	1.3 UJ	1.3	0.58
Methylene Chloride	2400	**1.9** J1	2.1	0.68	**2.0** J1	2.1	0.67	**2.3** J1	2.7	0.85	**1.6** J1	2.0	0.64	**2.3** J1	2.5	0.80
Acetone	510,000	**43**	5.4	0.52	**33**	5.3	0.51	**78**	6.7	0.64	**45**	5.0	0.49	**81**	6.3	0.61
Carbon Disulfide	75,000	**3.9**	1.1	0.60	**3.8**	1.1	0.59	**2.0**	1.3	0.75	**4.1**	1.0	0.56	**1.1** J1	1.3	0.71
1,1-Dichloroethene	81	1.1 U	1.1	0.36	1.1 U	1.1	0.36	1.3 U	1.3	0.45	1.0 U	1.0	0.34	1.3 U	1.3	0.43
1,1-Dichloroethane	710	1.1 U	1.1	0.22	1.1 U	1.1	0.21	1.3 U	1.3	0.27	1.0 U	1.0	0.20	1.3 U	1.3	0.26
trans-1,2-Dichloroethene	19,000	1.1 U	1.1	0.28	1.1 U	1.1	0.28	1.3 U	1.3	0.36	1.0 U	1.0	0.27	1.3 U	1.3	0.34
cis-1,2-Dichloroethene	2,600	1.1 U	1.1	0.26	1.1 U	1.1	0.25	1.3 U	1.3	0.32	1.0 U	1.0	0.24	1.3 U	1.3	0.30
Chloroform	200	1.1 U	1.1	0.25	1.1 U	1.1	0.25	1.3 U	1.3	0.31	1.0 U	1.0	0.24	1.3 U	1.3	0.30
1,2-Dichloroethane	70	1.1 U	1.1	0.20	1.1 U	1.1	0.20	1.3 U	1.3	0.26	1.0 U	1.0	0.19	1.3 U	1.3	0.24
2-Butanone	430,000	**6.3**	5.4	0.55	**3.7** J1	5.3	0.54	**11**	6.7	0.69	**8.1**	5.0	0.52	**13**	6.3	0.65
1,1,1-Trichloroethane	1,900,000	1.1 U	1.1	0.24	1.1 U	1.1	0.24	1.3 U	1.3	0.30	1.0 U	1.0	0.23	1.3 U	1.3	0.29
Carbon Tetrachloride	21	1.1 U	1.1	0.23	1.1 U	1.1	0.23	1.3 U	1.3	0.28	1.0 U	1.0	0.21	1.3 U	1.3	0.27
Vinyl Acetate	---	5.4 U	5.4	0.41	5.3 U	5.3	0.40	6.7 U	6.7	0.51	5.0 U	5.0	0.38	6.3 U	6.3	0.48
Bromodichloromethane	89	1.1 U	1.1	0.27	1.1 U	1.1	0.27	1.3 U	1.3	0.34	1.0 U	1.0	0.26	1.3 U	1.3	0.32
1,2-Dichloropropane	92	1.1 U	1.1	0.17	1.1 U	1.1	0.17	1.3 U	1.3	0.22	1.0 U	1.0	0.16	1.3 U	1.3	0.21
cis-1,3-Dichloropropene	---	1.1 U	1.1	0.24	1.1 U	1.1	0.24	1.3 U	1.3	0.30	1.0 U	1.0	0.23	1.3 U	1.3	0.29
Trichloroethene	51	1.1 U	1.1	0.23	1.1 U	1.1	0.22	1.3 U	1.3	0.28	1.0 U	1.0	0.21	1.3 U	1.3	0.27
Dibromochloromethane	---	1.1 U	1.1	0.28	1.1 U	1.1	0.28	1.3 U	1.3	0.36	1.0 U	1.0	0.27	1.3 U	1.3	0.34
1,1,2-Trichloroethane	73	1.1 U	1.1	0.31	1.1 U	1.1	0.30	1.3 U	1.3	0.38	1.0 U	1.0	0.29	1.3 U	1.3	0.36
Benzene	93	**0.7** J1	1.1	0.32	**1.6**	1.1	0.31	**6.2**	1.3	0.40	**2.4**	1.0	0.30	1.3 U	1.3	0.37
trans-1,3-Dichloropropene	---	1.1 U	1.1	0.23	1.1 U	1.1	0.23	1.3 U	1.3	0.29	1.0 U	1.0	0.22	1.3 U	1.3	0.27
2-Chloroethylvinylether	---	5.4 U	5.4	0.30	5.3 U	5.3	0.29	6.7 U	6.7	0.37	5.0 U	5.0	0.28	6.3 U	6.3	0.35
Bromoform	---	1.1 U	1.1	0.32	1.1 U	1.1	0.31	1.3 U	1.3	0.40	1.0 U	1.0	0.30	1.3 U	1.3	0.38
4-Methyl-2-Pentanone (MIBK)	170,000	5.4 U	5.4	0.45	5.3 U	5.3	0.44	6.7 U	6.7	0.56	5.0 U	5.0	0.42	6.3 U	6.3	0.53
2-Hexanone	32,000	5.4 U	5.4	0.47	5.3 U	5.3	0.46	6.7 U	6.7	0.59	5.0 U	5.0	0.44	6.3 U	6.3	0.56
Tetrachloroethene	260	1.1 U	1.1	0.28	1.1 U	1.1	0.27	1.3 U	1.3	0.34	1.0 U	1.0	0.26	1.3 U	1.3	0.33
1,1,2,2-Tetrachloroethane	13	1.1 U	1.1	0.27	1.1 U	1.1	0.27	1.3 U	1.3	0.34	1.0 U	1.0	0.26	1.3 U	1.3	0.32
Toluene	100,000	**0.7** J1	1.1	0.16	**1.6**	1.1	0.16	**3.4**	1.3	0.20	**1.9**	1.0	0.15	1.3 U	1.3	0.19
Chlorobenzene	26,000	1.1 U	1.1	0.23	1.1 U	1.1	0.23	1.3 U	1.3	0.29	1.0 U	1.0	0.22	1.3 U	1.3	0.28
Ethylbenzene	230	**0.8** J1	1.1	0.22	**6.2**	1.1	0.21	**1.8**	1.3	0.27	**0.9** J1	1.0	0.20	1.3 U	1.3	0.26
Styrene	16,000,000	1.1 U	1.1	0.15	1.1 U	1.1	0.15	1.3 U	1.3	0.18	1.0 U	1.0	0.14	1.3 U	1.3	0.17
Trichlorofluoromethane	200,000	1.1 U	1.1	0.28	1.1 U	1.1	0.28	1.3 U	1.3	0.36	1.0 U	1.0	0.27	1.3 U	1.3	0.34
1,1,2-Trichloro-1,2,2-trifuoroethane	1,000,000,000	2.1 U	2.1	0.31	2.1 U	2.1	0.30	2.7 U	2.7	0.38	2.0 U	2.0	0.29	2.5 U	2.5	0.36
m,p-Xylene	160,000	**0.6** J1	1.1	0.42	**17**	1.1	0.41	**5.9**	1.3	0.52	**3.1**	1.0	0.40	1.3 U	1.3	0.50
o-Xylene	200,000	1.1 U	1.1	0.24	**3.4**	1.1	0.24	**3.4**	1.3	0.30	**1.9**	1.0	0.23	1.3 U	1.3	0.28
1,2-Dichlorobenzene	68,000	1.1 U	1.1	0.31	1.1 U	1.1	0.31	1.3 U	1.3	0.39	1.0 U	1.0	0.30	1.3 U	1.3	0.37
1,3-Dichlorobenzene	3,840	1.1 U	1.1	0.24	1.1 U	1.1	0.24	1.3 U	1.3	0.30	1.0 U	1.0	0.23	1.3 U	1.3	0.29
1,4-Dichlorobenzene	3,500	1.1 U	1.1	0.25	1.1 U	1.1	0.25	1.3 U	1.3	0.31	1.0 U	1.0	0.23	1.3 U	1.3	0.29
Acrolein	---	54 U	54	4.1	53 U	53	4.0	67 U	67	5.1	50 U	50	3.8	63 U	63	4.8
Methyl Iodide	---	1.1 U	1.1	0.23	1.1 U	1.1	0.23	1.3 U	1.3	0.29	1.0 U	1.0	0.22	1.3 U	1.3	0.27
Bromoethane	---	2.1 U	2.1	0.47	2.1 U	2.1	0.47	2.7 U	2.7	0.59	2.0 U	2.0	0.44	2.5 U	2.5	0.56
Acrylonitrile	---	5.4 U	5.4	1.1	5.3 U	5.3	1.1	6.7 U	6.7	1.4	5.0 U	5.0	1.0	6.3 U	6.3	1.3
1,1-Dichloropropene	---	1.1 U	1.1	0.33	1.1 U	1.1	0.33	1.3 U	1.3	0.42	1.0 U	1.0	0.31	1.3 U	1.3	0.39
Dibromomethane	---	1.1 U	1.1	0.16	1.1 U	1.1	0.16	1.3 U	1.3	0.20	1.0 U	1.0	0.15	1.3 U	1.3	0.19
1,1,1,2-Tetrachloroethane	---	1.1 U	1.1	0.25	1.1 U	1.1	0.25	1.3 U	1.3	0.31	1.0 U	1.0	0.23	1.3 U	1.3	0.29
1,2-Dibromo-3-chloropropane	---	5.4 U	5.4	0.63	5.3 U	5.3	0.62	6.7 U	6.7	0.78	5.0 U	5.0	0.59	6.3 U	6.3	0.74
1,2,3-Trichloropropane	---	2.1 U	2.1	0.55	2.1 U	2.1	0.55	2.7 U	2.7	0.69	2.0 U	2.0	0.52	2.5 U	2.5	0.65
trans-1,4-Dichloro-2-butene	---	5.4 U	5.4	0.47	5.3 U	5.3	0.46	6.7 U	6.7	0.58	5.0 U	5.0	0.44	6.3 U	6.3	0.55
1,3,5-Trimethylbenzene	800,000	1.1 U	1.1	0.27	**4.9**	1.1	0.27	**5.4**	1.3	0.34	**3.0**	1.0	0.26	1.3 U	1.3	0.32
1,2,4-Trimethylbenzene	800,000	1.1 U	1.1	0.25	**9.1**	1.1	0.24	**13**	1.3	0.31	**5.9**	1.0	0.23	1.3 U	1.3	0.29
Hexachlorobutadiene	---	5.4 U	5.4	0.44	5.3 U	5.3	0.43	6.7 U	6.7	0.55	5.0 U	5.0	0.41	6.3 U	6.3	0.52

TABLE M-3
MONITORING WELL BORINGS SOIL ANALYTICAL RESULTS
BOEING ISAACSON-THOMPSON
REMEDIAL INVESTIGATION

	Preliminary Cleanup Level	IT-MW-13(5-6.5) TV61G 11/03/2011			IT-MW-13(8-9.5) TV61H 11/03/2011			IT-MW-13(12.5-14) TV61I 11/03/2011			IT-MW-13(15-16.5) TV61J 11/03/2011			IT-MW-13B(2-3.5) TW45J 11/10/2011		
		Result	Reporting Limit	Detection Limit	Result	Reporting Limit	Detection Limit	Result	Reporting Limit	Detection Limit	Result	Reporting Limit	Detection Limit	Result	Reporting Limit	Detection Limit
Ethylene Dibromide	---	1.1 U	1.1	0.19	1.1 U	1.1	0.19	1.3 U	1.3	0.24	1.0 U	1.0	0.18	1.3 U	1.3	0.22
Bromochloromethane	---	1.1 U	1.1	0.35	1.1 U	1.1	0.34	1.3 U	1.3	0.43	1.0 U	1.0	0.33	1.3 U	1.3	0.41
2,2-Dichloropropane	---	1.1 U	1.1	0.31	1.1 U	1.1	0.31	1.3 U	1.3	0.39	1.0 U	1.0	0.29	1.3 U	1.3	0.37
1,3-Dichloropropane	---	1.1 U	1.1	0.22	1.1 U	1.1	0.22	1.3 U	1.3	0.28	1.0 U	1.0	0.21	1.3 U	1.3	0.26
Isopropylbenzene	78,000	**0.9** J1	1.1	0.25	**1.7**	1.1	0.25	**0.8** J1	1.3	0.31	1.0 U	1.0	0.23	1.3 U	1.3	0.29
n-Propylbenzene	11,000	**0.6** J1	1.1	0.29	**3.1**	1.1	0.29	**1.0** J1	1.3	0.36	**0.6** J1	1.0	0.27	1.3 U	1.3	0.34
Bromobenzene	---	1.1 U	1.1	0.16	1.1 U	1.1	0.16	1.3 U	1.3	0.20	1.0 U	1.0	0.15	1.3 U	1.3	0.19
2-Chlorotoluene	---	1.1 U	1.1	0.32	1.1 U	1.1	0.32	1.3 U	1.3	0.40	1.0 U	1.0	0.30	1.3 U	1.3	0.38
4-Chlorotoluene	400,000	1.1 U	1.1	0.30	1.1 U	1.1	0.29	1.3 U	1.3	0.37	1.0 U	1.0	0.28	1.3 U	1.3	0.35
tert-Butylbenzene	---	1.1 U	1.1	0.33	1.1 U	1.1	0.32	1.3 U	1.3	0.41	1.0 U	1.0	0.31	1.3 U	1.3	0.39
sec-Butylbenzene	---	1.1 U	1.1	0.26	1.1 U	1.1	0.25	**0.70** J1	1.3	0.32	1.0 U	1.0	0.24	1.3 U	1.3	0.30
4-Isopropyltoluene	---	1.1 U	1.1	0.25	**0.7** J, J1	1.1	0.25	**1.8** J	1.3	0.32	**1.0** J, J1	1.0	0.24	1.3 U	1.3	0.30
n-Butylbenzene	27,000	1.1 U	1.1	0.28	1.1 U	1.1	0.28	1.3 U	1.3	0.35	1.0 U	1.0	0.26	1.3 U	1.3	0.33
1,2,4-Trichlorobenzene	80	5.4 U	5.4	0.36	5.3 U	5.3	0.35	6.7 U	6.7	0.44	5.0 U	5.0	0.33	6.3 U	6.3	0.42
Naphthalene	2,100	5.4 U	5.4	0.46	**1.1** J, J1	5.3	0.45	**7.3** J	6.7	0.57	**5.9** J	5.0	0.43	6.3 U	6.3	0.54
1,2,3-Trichlorobenzene	---	5.4 U	5.4	0.33	5.3 U	5.3	0.32	6.7 U	6.7	0.41	5.0 U	5.0	0.31	6.3 U	6.3	0.39
SEMIVOLATILES (µg/kg)																
Method SW8270D																
Phenol	1,900,000	19 U	19	8.1	18 U	18	8.0	19 UJ	19	8.3	19 U	19	8.4	19 U	19	8.1
Bis-(2-Chloroethyl) Ether	---	19 U	19	3.1	18 U	18	3.1	19 U	19	3.2	19 U	19	3.3	19 U	19	3.1
2-Chlorophenol	---	19 U	19	2.2	18 U	18	2.2	19 UJ	19	2.3	19 U	19	2.3	19 U	19	2.2
1,3-Dichlorobenzene	3,840	19 U	19	2.5	18 U	18	2.4	**22**	19	2.5	19 U	19	2.6	19 U	19	2.5
1,4-Dichlorobenzene	3,500	19 U	19	2.7	18 U	18	2.6	**12** J1	19	2.7	19 U	19	2.8	19 U	19	2.7
Benzyl Alcohol	8,000,000	19 U	19	5.7	18 U	18	5.6	19 U	19	5.8	19 U	19	5.9	19 U	19	5.7
1,2-Dichlorobenzene	68,000	19 U	19	2.3	18 U	18	2.3	**22**	19	2.4	19 U	19	2.4	19 U	19	2.3
2-Methylphenol	250,000	19 U	19	4.9	18 U	18	4.8	19 UJ	19	5.0	19 U	19	5.1	19 U	19	4.9
2,2'-Oxybis(1-Chloropropane)	---	19 U	19	3.5	18 U	18	3.5	19 U	19	3.6	19 U	19	3.7	19 U	19	3.5
4-Methylphenol	41,000	38 U	38	6.2	37 U	37	6.1	**18** J, J1	38	6.4	39 U	39	6.4	37 U	37	6.2
N-Nitroso-Di-N-Propylamine	---	19 U	19	3.1	18 U	18	3.1	19 U	19	3.2	19 U	19	3.3	19 U	19	3.1
Hexachloroethane	---	19 U	19	2.8	18 U	18	2.7	19 U	19	2.8	19 U	19	2.9	19 U	19	2.7
Nitrobenzene	---	19 U	19	3.8	18 U	18	3.7	19 U	19	3.9	19 U	19	3.9	19 U	19	3.8
Isophorone	---	19 U	19	2.7	18 U	18	2.6	19 U	19	2.7	19 U	19	2.8	19 U	19	2.7
2-Nitrophenol	---	94 U	94	36	92 U	92	36	96 UJ	96	37	97 U	97	38	93 U	93	36
2,4-Dimethylphenol	95,000	38 UJ	38	3.2	37 UJ	37	3.2	38 UJ	38	3.3	39 UJ	39	3.4	37 U	37	3.2
Benzoic Acid	9,000	380 U	380	95	370 U	370	93	380 UJ	380	97	390 U	390	98	370 U	370	94
bis(2-Chloroethoxy) Methane	---	19 U	19	1.9	18 U	18	1.8	19 U	19	1.9	19 U	19	1.9	19 U	19	1.9
2,4-Dichlorophenol	---	190 U	190	20	180 U	180	20	190 UJ	190	21	190 U	190	21	190 U	190	20
1,2,4-Trichlorobenzene	80	19 U	19	3.3	18 U	18	3.2	19 U	19	3.3	19 U	19	3.4	19 U	19	3.2
Naphthalene	2,100	**12** J1	19	2.6	**33**	18	2.5	**130**	19	2.6	**82**	19	2.7	**12** J1	19	2.6
4-Chloroaniline	---	250 U	250	21	250 U	250	21	260 U	260	21	260 U	260	22	250 U	250	21
Hexachlorobutadiene	---	94 U	94	4.3	92 U	92	4.2	96 U	96	4.4	97 U	97	4.4	93 U	93	4.3
4-Chloro-3-methylphenol	740,000	94 U	94	14	92 U	92	14	96 UJ	96	14	97 U	97	15	93 U	93	14
2-Methylnaphthalene	320,000	19 U	19	2.9	**23**	18	2.8	**120**	19	2.9	**86**	19	3.0	**15** J1	19	2.9
Hexachlorocyclopentadiene	---	380 U	380	62	370 U	370	61	380 U	380	64	390 U	390	64	370 U	370	62
2,4,6-Trichlorophenol	---	94 U	94	21	92 U	92	21	96 UJ	96	21	97 U	97	22	93 U	93	21
2,4,5-Trichlorophenol	---	94 U	94	20	92 U	92	20	96 UJ	96	21	97 U	97	21	93 U	93	20
2-Chloronaphthalene	---	19 U	19	2.5	18 U	18	2.4	19 U	19	2.5	19 U	19	2.6	19 U	19	2.5
2-Nitroaniline	---	94 U	94	17	92 U	92	17	96 U	96	18	97 U	97	18	93 U	93	17
Dimethylphthalate	71	19 U	19	2.7	18 U	18	2.7	19 U	19	2.8	19 U	19	2.8	19 U	19	2.7
Acenaphthylene	---	19 U	19	5.3	18 U	18	5.3	**14** J1	19	5.5	19 U	19	5.5	19 U	19	5.3
3-Nitroaniline	---	94 U	94	21	92 U	92	21	96 U	96	22	97 U	97	22	93 U	93	21
Acenaphthene	230,000	19 U	19	3.1	**9.2** J1	18	3.0	**33**	19	3.1	**23**	19	3.2	19 U	19	3.1
2,4-Dinitrophenol	---	800 U	800	100	780 U	780	100	820 UJ	820	110	820 U	820	110	790 U	790	100
4-Nitrophenol	---	94 U	94	32	92 U	92	32	96 UJ	96	33	97 U	97	34	93 U	93	32
Dibenzofuran	80,000	19 U	19	3.8	**12** J1	18	3.8	**28**	19	3.9	**22**	19	4.0	19 U	19	3.8
2,6-Dinitrotoluene	---	94 U	94	29	92 U	92	28	96 U	96	29	97 U	97	30	93 U	93	29

TABLE M-3
MONITORING WELL BORINGS SOIL ANALYTICAL RESULTS
BOEING ISAACSON-THOMPSON
REMEDIAL INVESTIGATION

	Preliminary Cleanup Level	IT-MW-13(5-6.5) TV61G 11/03/2011			IT-MW-13(8-9.5) TV61H 11/03/2011			IT-MW-13(12.5-14) TV61I 11/03/2011			IT-MW-13(15-16.5) TV61J 11/03/2011			IT-MW-13B(2-3.5) TW45J 11/10/2011		
		Result	Reporting Limit	Detection Limit	Result	Reporting Limit	Detection Limit	Result	Reporting Limit	Detection Limit	Result	Reporting Limit	Detection Limit	Result	Reporting Limit	Detection Limit
2,4-Dinitrotoluene	---	94 U	94	18	92 U	92	18	96 U	96	19	97 U	97	19	93 U	93	18
Diethylphthalate	178,000	47 U	47	34	46 U	46	34	48 U	48	35	48 U	48	36	47 U	47	34
4-Chlorophenyl-phenylether	---	19 U	19	5.0	18 U	18	4.9	19 U	19	5.1	19 U	19	5.1	19 U	19	4.9
Fluorene	150,000	19 U	19	4.1	**14** J, J1	18	4.0	**21** J	19	4.2	**28** J	19	4.2	19 U	19	4.1
4-Nitroaniline	---	94 U	94	35	92 U	92	35	96 U	96	36	97 U	97	37	93 U	93	35
4,6-Dinitro-2-Methylphenol	---	190 U	190	20	180 U	180	20	190 UJ	190	20	190 U	190	21	190 U	190	20
N-Nitrosodiphenylamine	204,000	19 U	19	5.0	18 U	18	5.0	**25**	19	5.2	19 U	19	5.2	19 U	19	5.0
4-Bromophenyl-phenylether	---	19 U	19	4.7	18 U	18	4.6	19 U	19	4.8	19 U	19	4.9	19 U	19	4.7
Hexachlorobenzene	---	19 U	19	4.0	18 U	18	3.9	19 U	19	4.1	19 U	19	4.2	19 U	19	4.0
Pentachlorophenol	---	190 U	190	45	180 U	180	45	190 UJ	190	47	190 U	190	47	190 U	190	45
Phenanthrene	---	**13** J1	19	3.4	**59**	18	3.3	**370**	19	3.5	**240**	19	3.5	**48**	19	3.4
Carbazole	50,000	19 UJ	19	2.5	18 UJ	18	2.5	**42** J	19	2.6	**20** J	19	2.6	19 U	19	2.5
Anthracene	1,600,000	19 U	19	4.2	18 U	18	4.1	**58**	19	4.3	**28**	19	4.4	19 U	19	4.2
Di-n-Butylphthalate	26,000	19 U	19	7.6	18 U	18	7.5	19 U	19	7.8	19 U	19	7.9	19 U	19	7.6
Fluoranthene	230,000	**16** J1	19	2.7	**39**	18	2.7	**450**	19	2.8	**150**	19	2.8	**34**	19	2.7
Pyrene	240,000	**14** J1	19	1.8	**41**	18	1.8	**420**	19	1.9	**160**	19	1.9	**29**	19	1.8
Butylbenzylphthalate	1,700	19 U	19	5.7	18 U	18	5.6	19 U	19	5.9	19 U	19	6.0	19 U	19	5.7
3,3'-Dichlorobenzidine	---	140 UJ	140	17	140 UJ	140	16	140 UJ	140	17	150 UJ	150	17	140 U	140	17
Benzo(a)anthracene	---	19 U	19	3.1	**17** J1	18	3.0	**230**	19	3.2	**59**	19	3.2	19 U	19	3.1
bis(2-Ethylhexyl)phthalate	56,600	30 U	23	14	85 U	23	13	36 U	24	14	24 U	24	14	37 U	23	14
Chrysene	---	**9.4** J1	19	3.5	**26**	18	3.4	**300**	19	3.6	**99**	19	3.6	**19**	19	3.5
Di-n-Octyl phthalate	---	19 U	19	5.5	18 U	18	5.4	19 U	19	5.6	19 U	19	5.7	19 U	19	5.4
Benzo(a)pyrene	---	19 U	19	5.1	**15** J1	18	5.0	**160**	19	5.2	**48**	19	5.3	19 U	19	5.1
Indeno(1,2,3-cd)pyrene	---	19 U	19	4.4	18 U	18	4.3	**69**	19	4.5	**20**	19	4.5	19 U	19	4.4
Dibenz(a,h)anthracene	---	19 U	19	4.0	18 U	18	4.0	**27**	19	4.1	19 U	19	4.2	19 U	19	4.0
Benzo(g,h,i)perylene	---	19 U	19	4.1	18 U	18	4.0	**85**	19	4.2	**27**	19	4.3	19 U	19	4.1
1-Methylnaphthalene	16,000	19 U	19	2.5	**12** J1	18	2.5	**77**	19	2.6	**47**	19	2.6	**12** J1	19	2.5
Total Benzofluoranthenes	---	19 U	19	2.6	**26**	18	2.5	**290**	19	2.6	**75**	19	2.7	**20**	19	2.6
cPAH TEQ	15	**0.09** J	NA	NA	**20** J	NA	NA	**225**	NA	NA	**64**	NA	NA	**2.2**	NA	NA
PAHs (µg/kg)																
Method SW8270D-SIM																
Naphthalene	2,100	**11**	4.6	2.4	**33**	4.7	2.5	**96**	9.7	5.1	**100**	9.1	4.8	**22**	4.6	2.4
2-Methylnaphthalene	320,000	**5.7**	4.6	1.4	**27**	4.7	1.4	**110**	9.7	2.9	**98**	9.1	2.8	**17**	4.6	1.4
1-Methylnaphthalene	16,000	**4.0** J1	4.6	1.6	**16**	4.7	1.6	**92**	9.7	3.3	**61**	9.1	3.1	**14**	4.6	1.6
Total Naphthalenes	---	**20.7** J1	NA	NA	**76**	NA	NA	**298**	NA	NA	**259**	NA	NA	**53**	NA	NA
Acenaphthylene	---	4.6 U	4.6	1.2	4.7 U	4.7	1.2	9.7 U	9.7	2.4	**10**	9.1	2.3	**3.3** J1	4.6	1.2
Acenaphthene	230,000	4.6 U	4.6	1.2	**20**	4.7	1.2	**91**	9.7	2.6	**29**	9.1	2.4	**11**	4.6	1.2
Fluorene	150,000	**3.1** J1	4.6	1.2	**17**	4.7	1.2	**30**	9.7	2.5	**35**	9.1	2.4	**8.0**	4.6	1.2
Phenanthrene	---	**13**	4.6	1.8	**80**	4.7	1.9	**300**	9.7	3.8	**260**	9.1	3.6	**33**	4.6	1.8
Anthracene	1,600,000	4.6 U	4.6	1.3	**15**	4.7	1.4	**43**	9.7	2.8	**42**	9.1	2.7	**4.4** J1	4.6	1.3
Fluoranthene	230,000	**15**	4.6	1.6	**68**	4.7	1.7	**190**	9.7	3.4	**180**	9.1	3.2	**35**	4.6	1.6
Pyrene	240,000	**12**	4.6	2.0	**62**	4.7	2.1	**240**	9.7	4.3	**180**	9.1	4.1	**27**	4.6	2.0
Benzo(a)anthracene	---	**4.4** J1	4.6	1.5	**23**	4.7	1.5	**110**	9.7	3.1	**73**	9.1	2.9	**9.6**	4.6	1.5
Chrysene	---	**9.0**	4.6	1.7	**36**	4.7	1.8	**170**	9.7	3.6	**100**	9.1	3.4	**17**	4.6	1.7
Benzo(a)pyrene	---	**6.5**	4.6	1.6	**25**	4.7	1.6	**110**	9.7	3.4	**60**	9.1	3.2	**13**	4.6	1.6
Indeno(1,2,3-cd)pyrene	---	4.6 U	4.6	3.2	**11**	4.7	3.2	**26**	9.7	6.7	**24**	9.1	6.3	**8.5**	4.6	3.2
Dibenz(a,h)anthracene	---	4.6 U	4.6	2.2	**4.3** J1	4.7	2.2	**15**	9.7	4.6	**14**	9.1	4.3	**3.3** J1	4.6	2.2
Benzo(g,h,i)perylene	---	**5.4**	4.6	2.8	**13**	4.7	2.9	**42**	9.7	5.9	**36**	9.1	5.6	**11**	4.6	2.8
Dibenzofuran	80,000	**3.5** J1	4.6	1.4	**14**	4.7	1.4	**30**	9.7	2.9	**33**	9.1	2.8	**8.5**	4.6	1.4
Total Benzofluoranthenes	---	**14**	4.6	1.7	**37**	4.7	1.7	**95**	9.7	3.6	**96**	9.1	3.4	**29**	4.6	1.7
cPAH TEQ	15	**8.4** J	NA	NA	**33** J	NA	NA	**136**	NA	NA	**82**	NA	NA	**18** J	NA	NA

TABLE M-3
MONITORING WELL BORINGS SOIL ANALYTICAL RESULTS
BOEING ISAACSON-THOMPSON
REMEDIAL INVESTIGATION

	Preliminary Cleanup Level	IT-MW-13(5-6.5) TV61G 11/03/2011			IT-MW-13(8-9.5) TV61H 11/03/2011			IT-MW-13(12.5-14) TV61I 11/03/2011			IT-MW-13(15-16.5) TV61J 11/03/2011			IT-MW-13B(2-3.5) TW45J 11/10/2011		
		Result	Reporting Limit	Detection Limit	Result	Reporting Limit	Detection Limit	Result	Reporting Limit	Detection Limit	Result	Reporting Limit	Detection Limit	Result	Reporting Limit	Detection Limit
PCBs (µg/kg)																
Method SW8082																
Aroclor 1016	0.72	32 U	32	2.0	33 U	33	2.0	32 U	32	1.9	31 U	31	1.9	32 U	32	1.9
Aroclor 1242	0.72	32 U	32	2.4	33 U	33	2.4	32 U	32	2.3	31 U	31	2.3	32 U	32	2.4
Aroclor 1248	220	32 U	32	2.4	33 U	33	2.4	32 U	32	2.3	31 U	31	2.3	32 U	32	2.4
Aroclor 1254	0.29	32 U	32	2.4	33 U	33	2.4	32 U	32	2.3	31 U	31	2.3	32 U	32	2.4
Aroclor 1260	5.4	32 U	32	2.4	33 U	33	2.4	32 U	32	2.3	31 U	31	2.3	32 U	32	2.4
Aroclor 1221	---	32 U	32	2.4	33 U	33	2.4	32 U	32	2.3	31 U	31	2.3	32 U	32	2.4
Aroclor 1232	---	32 U	32	2.4	33 U	33	2.4	32 U	32	2.3	31 U	31	2.3	32 U	32	2.4
Total PCBs	1.8	ND	NA	NA	ND	NA	NA	ND	NA	NA	ND	NA	NA	ND	NA	NA
TOTAL PETROLEUM HYDROCARBONS (mg/kg)																
NWTPH-Dx																
Diesel-Range Organics	2,000	**8.4**	5.6	1.4	**32**	5.7	1.5	**130**	29	7.5	**48**	12	3.0	**9.8**	5.5	1.4
Motor Oil-Range Organics	2,000	**50**	11	1.7	**87**	11	1.8	**380**	59	9.2	**140**	23	3.7	**32**	11	1.7
NWTPH-G																
Gasoline-Range Organics	100/30	5.9 U	5.9	2.8	**7.3**	6.5	3.1	**22**	6.9	3.3	**19**	5.9	2.8	6.5 U	6.5	3.1
TOTAL METALS (mg/kg)																
Methods 200.8/7471A/SW7196A																
Antimony	5	0.2 U	0.2	0.014	0.2 U	0.2	0.014	**0.3**	0.2	0.015	0.2 U	0.2	0.015	0.2 U	0.2	0.014
Arsenic	7	**3.1**	0.2	0.090	**2.7**	0.2	0.095	**24.4**	0.2	0.099	**19.5**	0.2	0.10	**3.8**	0.2	0.097
Barium	640	**45.3**	0.5	0.058	**119**	0.5	0.061	**143**	0.6	0.064	**145**	0.6	0.065	**50.8**	0.6	0.062
Beryllium	160	**0.2**	0.2	0.019	**0.3**	0.2	0.020	**0.3**	0.2	0.020	0.2 U	0.2	0.021	**0.2**	0.2	0.020
Cadmium	1.3	**0.1**	0.1	0.012	**0.1**	0.1	0.013	**2.2**	0.1	0.014	**1.0**	0.1	0.014	0.1 U	0.1	0.013
Chromium	1,480	**28**	3	0.20	**171**	3	0.21	**3430**	10	1.1	**1640**	6	0.44	**15.7**	0.6	0.042
Chromium VI	3.8	**0.431**	0.431	0.030	0.465 U	0.465	0.030	0.459 U	0.459	0.030	**0.456**	0.456	0.030	0.453 U	0.453	0.030
Copper	36	**17.8**	0.5	0.037	**34.9**	0.5	0.039	**320**	0.6	0.041	**209**	0.6	0.042	**23.6**	0.6	0.040
Lead	250	**4.5**	0.1	0.049	**8.7**	0.1	0.051	**570**	3	1.3	**421**	1	0.55	**7.5**	0.1	0.052
Mercury	1.5	**0.04**	0.02	0.0011	**0.02**	0.02	0.0012	0.03 U	0.03	0.0015	0.02 U	0.02	0.0011	**0.05**	0.02	0.0013
Nickel	210	**34.6**	0.5	0.051	**37.4**	0.5	0.053	**2220**	10	1.4	**869**	6	0.57	**17.8**	0.6	0.054
Selenium	1.0	0.5 U	0.5	0.10	0.5 U	0.5	0.11	0.6 U	0.6	0.11	0.6 U	0.6	0.12	0.6 U	0.6	0.11
Silver	170	0.2 U	0.2	0.0083	0.2 U	0.2	0.0087	**2.9**	0.2	0.0091	**2.2**	0.2	0.0093	0.2 U	0.2	0.0089
Thallium	0.67	0.2 U	0.2	0.0031	0.2 U	0.2	0.0033	0.2 U	0.2	0.0034	0.2 U	0.2	0.0035	0.2 U	0.2	0.0033
Zinc	1,400	**35**	4	0.35	**44**	4	0.37	**600**	110	9.6	**252**	5	0.40	**42**	4	0.38

TABLE M-3
MONITORING WELL BORINGS SOIL ANALYTICAL RESULTS
BOEING ISAACSON-THOMPSON
REMEDIAL INVESTIGATION

	Preliminary Cleanup Level	IT-MW-13B(5-6.5) TW45K 11/10/2011			IT-MW-13B(6.5-8) TW89A 11/11/2011			IT-MW-13B(8-9.5) TW89B 11/11/2011			IT-MW-13B(12.5-13.5) TW89C 11/11/2011			IT-MW-14(2-3.5) TW27J 11/08/2011		
		Result	Reporting Limit	Detection Limit	Result	Reporting Limit	Detection Limit	Result	Reporting Limit	Detection Limit	Result	Reporting Limit	Detection Limit	Result	Reporting Limit	Detection Limit
VOLATILES (µg/kg)																
Method SW8260C																
Chloromethane	1,600	1.2 UJ	1.2	0.31	1.2 UJ	1.2	0.33	1.6 UJ	1.6	0.42	1.1 UJ	1.1	0.29	1.0 U	1.0	0.26
Bromomethane	---	1.2 UJ	1.2	0.22	1.2 UJ	1.2	0.23	1.6 UJ	1.6	0.30	1.1 UJ	1.1	0.20	1.0 UJ	1.0	0.19
Vinyl Chloride	7.4	1.2 U	1.2	0.28	1.2 U	1.2	0.29	1.6 U	1.6	0.37	1.1 U	1.1	0.25	1.0 U	1.0	0.24
Chloroethane	280,000	1.2 UJ	1.2	0.54	1.2 UJ	1.2	0.57	1.6 UJ	1.6	0.74	1.1 UJ	1.1	0.50	1.0 U	1.0	0.46
Methylene Chloride	2400	**4.2**	2.3	0.75	**4.3**	2.5	0.79	**2.0** J1	3.2	1.0	**3.6**	2.2	0.69	**2.6**	2.0	0.64
Acetone	510,000	**38**	5.9	0.57	**30** J	6.2	0.60	**43** J	8.0	0.77	**40** J	5.4	0.52	**15** J	5.0	0.48
Carbon Disulfide	75,000	**3.0**	1.2	0.66	**7.7**	1.2	0.70	**12**	1.6	0.89	**3.7**	1.1	0.61	**1.7**	1.0	0.56
1,1-Dichloroethene	81	1.2 U	1.2	0.39	1.2 U	1.2	0.42	1.6 U	1.6	0.54	1.1 U	1.1	0.36	1.0 U	1.0	0.34
1,1-Dichloroethane	710	1.2 U	1.2	0.24	1.2 U	1.2	0.25	1.6 U	1.6	0.32	1.1 U	1.1	0.22	1.0 UJ	1.0	0.20
trans-1,2-Dichloroethene	19,000	1.2 U	1.2	0.31	1.2 U	1.2	0.33	1.6 U	1.6	0.42	1.1 U	1.1	0.29	1.0 U	1.0	0.27
cis-1,2-Dichloroethene	2,600	1.2 U	1.2	0.28	1.2 U	1.2	0.30	1.6 U	1.6	0.38	1.1 U	1.1	0.26	1.0 U	1.0	0.24
Chloroform	200	1.2 U	1.2	0.27	1.2 U	1.2	0.29	1.6 U	1.6	0.37	1.1 U	1.1	0.25	1.0 U	1.0	0.23
1,2-Dichloroethane	70	1.2 U	1.2	0.22	1.2 U	1.2	0.24	1.6 U	1.6	0.30	1.1 U	1.1	0.21	1.0 U	1.0	0.19
2-Butanone	430,000	**4.3** J1	5.9	0.60	**3.6** J1	6.2	0.64	**8.6**	8.0	0.82	**4.2** J1	5.4	0.56	5.0 U	5.0	0.52
1,1,1-Trichloroethane	1,900,000	1.2 U	1.2	0.27	1.2 U	1.2	0.28	1.6 U	1.6	0.36	1.1 U	1.1	0.25	1.0 U	1.0	0.23
Carbon Tetrachloride	21	1.2 U	1.2	0.25	1.2 U	1.2	0.26	1.6 U	1.6	0.34	1.1 U	1.1	0.23	1.0 U	1.0	0.21
Vinyl Acetate	---	5.9 U	5.9	0.45	6.2 U	6.2	0.47	8.0 U	8.0	0.61	5.4 U	5.4	0.41	5.0 U	5.0	0.38
Bromodichloromethane	89	1.2 U	1.2	0.30	1.2 U	1.2	0.32	1.6 U	1.6	0.40	1.1 U	1.1	0.28	1.0 U	1.0	0.26
1,2-Dichloropropane	92	1.2 U	1.2	0.19	1.2 U	1.2	0.20	1.6 U	1.6	0.26	1.1 U	1.1	0.18	1.0 U	1.0	0.16
cis-1,3-Dichloropropene	---	1.2 U	1.2	0.27	1.2 U	1.2	0.28	1.6 U	1.6	0.36	1.1 U	1.1	0.25	1.0 U	1.0	0.23
Trichloroethene	51	1.2 U	1.2	0.25	1.2 U	1.2	0.26	1.6 U	1.6	0.34	1.1 U	1.1	0.23	1.0 U	1.0	0.21
Dibromochloromethane	---	1.2 U	1.2	0.31	1.2 U	1.2	0.33	1.6 U	1.6	0.42	1.1 U	1.1	0.29	1.0 U	1.0	0.27
1,1,2-Trichloroethane	73	1.2 U	1.2	0.34	1.2 U	1.2	0.36	1.6 U	1.6	0.46	1.1 U	1.1	0.31	1.0 U	1.0	0.29
Benzene	93	1.2 U	1.2	0.35	**1.2** J1	1.2	0.37	**1.9**	1.6	0.47	**1.0** J1	1.1	0.32	1.0 U	1.0	0.30
trans-1,3-Dichloropropene	---	1.2 U	1.2	0.25	1.2 U	1.2	0.27	1.6 U	1.6	0.34	1.1 U	1.1	0.23	1.0 U	1.0	0.22
2-Chloroethylvinylether	---	5.9 U	5.9	0.32	6.2 U	6.2	0.34	8.0 U	8.0	0.44	5.4 U	5.4	0.30	5.0 U	5.0	0.28
Bromoform	---	1.2 U	1.2	0.35	1.2 U	1.2	0.37	1.6 U	1.6	0.47	1.1 U	1.1	0.32	1.0 U	1.0	0.30
4-Methyl-2-Pentanone (MIBK)	170,000	5.9 U	5.9	0.49	6.2 U	6.2	0.52	8.0 U	8.0	0.67	5.4 U	5.4	0.46	5.0 U	5.0	0.42
2-Hexanone	32,000	5.9 U	5.9	0.52	6.2 U	6.2	0.55	8.0 U	8.0	0.70	5.4 U	5.4	0.48	5.0 U	5.0	0.44
Tetrachloroethene	260	1.2 U	1.2	0.30	1.2 U	1.2	0.32	1.6 U	1.6	0.41	1.1 U	1.1	0.28	1.0 U	1.0	0.26
1,1,2,2-Tetrachloroethane	13	1.2 U	1.2	0.30	1.2 U	1.2	0.31	1.6 U	1.6	0.40	1.1 U	1.1	0.27	1.0 U	1.0	0.25
Toluene	100,000	**0.6** J1	1.2	0.18	**1.7**	1.2	0.19	**0.9** J1	1.6	0.24	**0.9** J1	1.1	0.16	1.0 U	1.0	0.15
Chlorobenzene	26,000	1.2 U	1.2	0.26	1.2 U	1.2	0.27	1.6 U	1.6	0.35	1.1 U	1.1	0.24	1.0 U	1.0	0.22
Ethylbenzene	230	1.2 U	1.2	0.24	**0.6** J1	1.2	0.25	1.6 U	1.6	0.32	1.1 U	1.1	0.22	1.0 U	1.0	0.20
Styrene	16,000,000	1.2 U	1.2	0.16	1.2 U	1.2	0.17	1.6 U	1.6	0.22	1.1 U	1.1	0.15	1.0 U	1.0	0.14
Trichlorofluoromethane	200,000	1.2 U	1.2	0.31	1.2 U	1.2	0.33	1.6 U	1.6	0.42	1.1 U	1.1	0.29	1.0 U	1.0	0.27
1,1,2-Trichloro-1,2,2-trifuoroethane	1,000,000,000	2.3 U	2.3	0.34	2.5 U	2.5	0.36	3.2 U	3.2	0.46	2.2 U	2.2	0.31	2.0 U	2.0	0.29
m,p-Xylene	160,000	1.2 U	1.2	0.46	**1.2** J1	1.2	0.49	1.6 U	1.6	0.62	**0.7** J1	1.1	0.43	1.0 U	1.0	0.39
o-Xylene	200,000	1.2 U	1.2	0.26	1.2 U	1.2	0.28	1.6 U	1.6	0.36	1.1 U	1.1	0.24	1.0 U	1.0	0.22
1,2-Dichlorobenzene	68,000	1.2 U	1.2	0.34	1.2 U	1.2	0.36	1.6 U	1.6	0.47	1.1 U	1.1	0.32	1.0 U	1.0	0.29
1,3-Dichlorobenzene	3,840	1.2 U	1.2	0.27	1.2 U	1.2	0.28	1.6 U	1.6	0.36	1.1 U	1.1	0.25	1.0 U	1.0	0.23
1,4-Dichlorobenzene	3,500	1.2 U	1.2	0.27	1.2 U	1.2	0.29	1.6 U	1.6	0.37	1.1 U	1.1	0.25	1.0 U	1.0	0.23
Acrolein	---	59 U	59	4.5	62 U	62	4.7	80 U	80	6.1	54 U	54	4.1	50 UJ	50	3.8
Methyl Iodide	---	1.2 U	1.2	0.25	**2.3**	1.2	0.27	1.6 U	1.6	0.34	1.1 U	1.1	0.23	1.0 U	1.0	0.22
Bromoethane	---	2.3 U	2.3	0.52	2.5 U	2.5	0.55	3.2 U	3.2	0.70	2.2 U	2.2	0.48	2.0 U	2.0	0.44
Acrylonitrile	---	5.9 U	5.9	1.2	6.2 U	6.2	1.3	8.0 U	8.0	1.6	5.4 U	5.4	1.1	5.0 U	5.0	1.0
1,1-Dichloropropene	---	1.2 U	1.2	0.37	1.2 U	1.2	0.39	1.6 U	1.6	0.50	1.1 U	1.1	0.34	1.0 U	1.0	0.31
Dibromomethane	---	1.2 U	1.2	0.17	1.2 U	1.2	0.18	1.6 U	1.6	0.23	1.1 U	1.1	0.16	1.0 U	1.0	0.15
1,1,1,2-Tetrachloroethane	---	1.2 U	1.2	0.27	1.2 U	1.2	0.29	1.6 U	1.6	0.37	1.1 U	1.1	0.25	1.0 U	1.0	0.23
1,2-Dibromo-3-chloropropane	---	5.9 U	5.9	0.69	6.2 U	6.2	0.73	8.0 U	8.0	0.93	5.4 U	5.4	0.64	5.0 U	5.0	0.59
1,2,3-Trichloropropane	---	2.3 U	2.3	0.61	2.5 U	2.5	0.64	3.2 U	3.2	0.82	2.2 U	2.2	0.56	2.0 U	2.0	0.52
trans-1,4-Dichloro-2-butene	---	5.9 U	5.9	0.51	6.2 U	6.2	0.54	8.0 U	8.0	0.70	5.4 U	5.4	0.47	5.0 U	5.0	0.44
1,3,5-Trimethylbenzene	800,000	1.2 U	1.2	0.30	**1.0** J1	1.2	0.32	1.6 U	1.6	0.40	1.1 U	1.1	0.28	1.0 U	1.0	0.26
1,2,4-Trimethylbenzene	800,000	1.2 U	1.2	0.27	**2.1**	1.2	0.29	1.6 U	1.6	0.37	**0.9** J1	1.1	0.25	1.0 U	1.0	0.23
Hexachlorobutadiene	---	5.9 U	5.9	0.48	6.2 U	6.2	0.51	8.0 U	8.0	0.65	5.4 U	5.4	0.44	5.0 U	5.0	0.41

TABLE M-3
MONITORING WELL BORINGS SOIL ANALYTICAL RESULTS
BOEING ISAACSON-THOMPSON
REMEDIAL INVESTIGATION

	Preliminary Cleanup Level	IT-MW-13B(5-6.5) TW45K 11/10/2011			IT-MW-13B(6.5-8) TW89A 11/11/2011			IT-MW-13B(8-9.5) TW89B 11/11/2011			IT-MW-13B(12.5-13.5) TW89C 11/11/2011			IT-MW-14(2-3.5) TW27J 11/08/2011		
		Result	Reporting Limit	Detection Limit	Result	Reporting Limit	Detection Limit	Result	Reporting Limit	Detection Limit	Result	Reporting Limit	Detection Limit	Result	Reporting Limit	Detection Limit
Ethylene Dibromide	---	1.2 U	1.2	0.21	1.2 U	1.2	0.22	1.6 U	1.6	0.28	1.1 U	1.1	0.19	1.0 U	1.0	0.18
Bromochloromethane	---	1.2 U	1.2	0.38	1.2 U	1.2	0.40	1.6 U	1.6	0.51	1.1 U	1.1	0.35	1.0 U	1.0	0.32
2,2-Dichloropropane	---	1.2 U	1.2	0.34	1.2 U	1.2	0.36	1.6 U	1.6	0.46	1.1 U	1.1	0.32	1.0 U	1.0	0.29
1,3-Dichloropropane	---	1.2 U	1.2	0.25	1.2 U	1.2	0.26	1.6 U	1.6	0.33	1.1 U	1.1	0.23	1.0 U	1.0	0.21
Isopropylbenzene	78,000	1.2 U	1.2	0.27	**0.7** J1	1.2	0.29	1.6 U	1.6	0.37	1.1 U	1.1	0.25	1.0 U	1.0	0.23
n-Propylbenzene	11,000	1.2 U	1.2	0.32	**0.9** J1	1.2	0.34	1.6 U	1.6	0.43	1.1 U	1.1	0.30	1.0 U	1.0	0.27
Bromobenzene	---	1.2 U	1.2	0.18	1.2 U	1.2	0.19	1.6 U	1.6	0.24	1.1 U	1.1	0.17	1.0 U	1.0	0.15
2-Chlorotoluene	---	1.2 U	1.2	0.35	1.2 U	1.2	0.37	1.6 U	1.6	0.48	1.1 U	1.1	0.33	1.0 U	1.0	0.30
4-Chlorotoluene	400,000	1.2 U	1.2	0.33	1.2 U	1.2	0.34	1.6 U	1.6	0.44	1.1 U	1.1	0.30	1.0 U	1.0	0.28
tert-Butylbenzene	---	1.2 U	1.2	0.36	1.2 U	1.2	0.38	1.6 U	1.6	0.49	1.1 U	1.1	0.33	1.0 U	1.0	0.31
sec-Butylbenzene	---	1.2 U	1.2	0.28	**1.6**	1.2	0.3	1.6 U	1.6	0.38	1.1 U	1.1	0.26	1.0 U	1.0	0.24
4-Isopropyltoluene	---	1.2 U	1.2	0.28	**2.0**	1.2	0.29	1.6 U	1.6	0.38	**1.6**	1.1	0.26	1.0 U	1.0	0.24
n-Butylbenzene	27,000	1.2 U	1.2	0.31	**1.0** J1	1.2	0.33	1.6 U	1.6	0.42	1.1 U	1.1	0.28	1.0 U	1.0	0.26
1,2,4-Trichlorobenzene	80	5.9 U	5.9	0.39	6.2 U	6.2	0.41	8.0 U	8.0	0.53	5.4 U	5.4	0.36	5.0 U	5.0	0.33
Naphthalene	2,100	**0.6** J1	5.9	0.50	**12**	6.2	0.53	**13**	8.0	0.68	**1.7** J1	5.4	0.47	5.0 U	5.0	0.43
1,2,3-Trichlorobenzene	---	5.9 U	5.9	0.36	6.2 U	6.2	0.38	8.0 U	8.0	0.49	5.4 U	5.4	0.33	5.0 U	5.0	0.31
SEMIVOLATILES (µg/kg)																
Method SW8270D																
Phenol	1,900,000	18 U	18	7.6	38 U	38	17	19 U	19	8.2	18 U	18	8.0	57 U	57	25
Bis-(2-Chloroethyl) Ether	---	18 U	18	2.9	38 U	38	6.4	19 U	19	3.2	18 U	18	3.1	57 U	57	9.5
2-Chlorophenol	---	18 U	18	2.1	38 U	38	4.6	19 U	19	2.3	18 U	18	2.2	57 U	57	6.8
1,3-Dichlorobenzene	3,840	18 U	18	2.3	38 U	38	5.0	19 U	19	2.5	18 U	18	2.4	57 U	57	7.5
1,4-Dichlorobenzene	3,500	18 U	18	2.5	38 U	38	5.5	19 U	19	2.7	18 U	18	2.6	57 U	57	8.1
Benzyl Alcohol	8,000,000	18 U	18	5.3	38 U	38	12	19 UJ	19	5.8	18 UJ	18	5.6	57 U	57	17
1,2-Dichlorobenzene	68,000	18 U	18	2.2	38 U	38	4.8	19 U	19	2.4	18 U	18	2.3	57 U	57	7.1
2-Methylphenol	250,000	18 U	18	4.6	38 U	38	10	19 U	19	5.0	18 U	18	4.8	57 U	57	15
2,2'-Oxybis(1-Chloropropane)	---	18 U	18	3.3	38 U	38	7.2	19 U	19	3.6	18 U	18	3.5	57 U	57	11
4-Methylphenol	41,000	35 U	35	5.8	76 U	76	13	38 U	38	6.3	37 U	37	6.1	110 U	110	19
N-Nitroso-Di-N-Propylamine	---	18 U	18	2.9	38 U	38	6.4	19 U	19	3.2	18 U	18	3.1	57 U	57	9.5
Hexachloroethane	---	18 U	18	2.6	38 U	38	5.6	19 U	19	2.8	18 U	18	2.7	57 U	57	8.3
Nitrobenzene	---	18 U	18	3.6	38 U	38	7.8	19 U	19	3.9	18 U	18	3.7	57 U	57	12
Isophorone	---	18 U	18	2.5	38 U	38	5.5	19 U	19	2.7	18 U	18	2.6	57 U	57	8.1
2-Nitrophenol	---	88 U	88	34	190 U	190	74	95 U	95	37	92 U	92	36	280 U	280	110
2,4-Dimethylphenol	95,000	35 U	35	3.0	76 U	76	6.6	38 U	38	3.3	37 U	37	3.2	110 U	110	9.8
Benzoic Acid	9,000	350 U	350	89	760 U	760	190	380 U	380	96	370 U	370	93	1100 U	1100	290
bis(2-Chloroethoxy) Methane	---	18 U	18	1.8	38 U	38	3.8	19 U	19	1.9	18 U	18	1.8	57 U	57	5.7
2,4-Dichlorophenol	---	180 U	180	19	380 U	380	41	190 U	190	20	180 U	180	20	570 U	570	61
1,2,4-Trichlorobenzene	80	18 U	18	3.0	38 U	38	6.6	19 U	19	3.3	18 U	18	3.2	57 U	57	9.9
Naphthalene	2,100	**8.8** J1	18	2.4	**240**	38	5.3	**120**	19	2.6	**14** J1	18	2.5	57 U	57	7.8
4-Chloroaniline	---	240 U	240	20	520 U	520	43	260 U	260	21	250 U	250	21	760 U	760	63
Hexachlorobutadiene	---	88 U	88	4.0	190 U	190	8.7	95 U	95	4.3	92 U	92	4.2	280 U	280	13
4-Chloro-3-methylphenol	740,000	88 U	88	13	190 U	190	29	95 U	95	14	92 U	92	14	280 U	280	43
2-Methylnaphthalene	320,000	18 U	18	2.7	**420**	38	5.8	**110**	19	2.9	**9.2** J1	18	2.8	57 U	57	8.7
Hexachlorocyclopentadiene	---	350 U	350	58	760 U	760	130	380 U	380	63	370 U	370	61	1100 U	1100	190
2,4,6-Trichlorophenol	---	88 U	88	20	190 U	190	43	95 U	95	21	92 U	92	21	280 U	280	63
2,4,5-Trichlorophenol	---	88 U	88	19	190 U	190	41	95 U	95	20	92 U	92	20	280 U	280	61
2-Chloronaphthalene	---	18 U	18	2.3	38 U	38	5.0	19 U	19	2.5	18 U	18	2.4	57 U	57	7.5
2-Nitroaniline	---	88 U	88	16	190 U	190	35	95 U	95	17	92 U	92	17	280 U	280	52
Dimethylphthalate	71	18 U	18	2.5	38 U	38	5.5	19 U	19	2.8	18 U	18	2.7	57 U	57	8.2
Acenaphthylene	---	18 U	18	5.0	38 U	38	11	19 U	19	5.4	18 U	18	5.3	57 U	57	16
3-Nitroaniline	---	88 U	88	20	190 U	190	43	95 U	95	21	92 U	92	21	280 U	280	64
Acenaphthene	230,000	18 U	18	2.9	**130**	38	6.3	**120**	19	3.1	18 U	18	3.0	57 U	57	9.3
2,4-Dinitrophenol	---	740 U	740	97	1600 UJ	1600	210	810 U	810	110	780 U	780	100	2400 U	2400	310
4-Nitrophenol	---	88 U	88	30	190 U	190	66	95 U	95	33	92 U	92	32	280 U	280	98
Dibenzofuran	80,000	18 U	18	3.6	**340**	38	7.8	**120**	19	3.9	18 U	18	3.8	57 U	57	12
2,6-Dinitrotoluene	---	88 U	88	27	190 U	190	58	95 U	95	29	92 U	92	28	280 U	280	87

TABLE M-3
MONITORING WELL BORINGS SOIL ANALYTICAL RESULTS
BOEING ISAACSON-THOMPSON
REMEDIAL INVESTIGATION

	Preliminary Cleanup Level	IT-MW-13B(5-6.5) TW45K 11/10/2011			IT-MW-13B(6.5-8) TW89A 11/11/2011			IT-MW-13B(8-9.5) TW89B 11/11/2011			IT-MW-13B(12.5-13.5) TW89C 11/11/2011			IT-MW-14(2-3.5) TW27J 11/08/2011		
		Result	Reporting Limit	Detection Limit	Result	Reporting Limit	Detection Limit	Result	Reporting Limit	Detection Limit	Result	Reporting Limit	Detection Limit	Result	Reporting Limit	Detection Limit
2,4-Dinitrotoluene	---	88 U	88	17	190 U	190	37	95 U	95	19	92 U	92	18	280 U	280	55
Diethylphthalate	178,000	44 U	44	32	96 U	96	70	48 U	48	35	46 U	46	34	140 U	140	100
4-Chlorophenyl-phenylether	---	18 U	18	4.6	38 U	38	10	19 U	19	5.0	18 U	18	4.9	57 U	57	15
Fluorene	150,000	18 U	18	3.8	**1000**	38	8.3	**170**	19	4.1	18 U	18	4.0	57 U	57	12
4-Nitroaniline	---	88 U	88	33	190 U	190	72	95 U	95	36	92 U	92	35	280 U	280	110
4,6-Dinitro-2-Methylphenol	---	180 U	180	19	380 U	380	40	190 U	190	20	180 U	180	20	570 U	570	60
N-Nitrosodiphenylamine	204,000	18 U	18	4.7	**36** J1	38	10	19 U	19	5.1	18 U	18	5.0	57 U	57	15
4-Bromophenyl-phenylether	---	18 U	18	4.4	38 U	38	9.6	19 U	19	4.8	18 U	18	4.6	57 U	57	14
Hexachlorobenzene	---	18 U	18	3.8	38 U	38	8.2	19 U	19	4.1	18 U	18	4.0	57 U	57	12
Pentachlorophenol	---	180 U	180	43	380 U	380	93	190 U	190	46	180 U	180	45	570 U	570	140
Phenanthrene	---	**17** J1	18	3.2	**2200**	38	7.0	**420**	19	3.5	**34**	18	3.4	**31** J1	57	10
Carbazole	50,000	18 U	18	2.4	**4200**	380	51	**52**	19	2.6	18 U	18	2.5	57 U	57	7.6
Anthracene	1,600,000	18 U	18	3.9	**16000**	380	86	**140**	19	4.3	**10** J1	18	4.1	57 U	57	13
Di-n-Butylphthalate	26,000	18 U	18	7.2	38 U	38	16	19 U	19	7.8	18 U	18	7.5	57 U	57	23
Fluoranthene	230,000	**14** J1	18	2.6	**1600**	38	5.6	**470**	19	2.8	**37**	18	2.7	57 U	57	8.2
Pyrene	240,000	**15** J1	18	1.7	**1500**	38	3.7	**410**	19	1.8	**35**	18	1.8	**34** J1	57	5.5
Butylbenzylphthalate	1,700	18 U	18	5.4	38 U	38	12	19 U	19	5.8	18 U	18	5.7	57 U	57	17
3,3'-Dichlorobenzidine	---	130 U	130	16	290 UJ	290	34	140 UJ	140	17	140 UJ	140	16	420 U	420	50
Benzo(a)anthracene	---	18 U	18	2.9	**780**	38	6.3	**120**	19	3.1	**16** J1	18	3.0	57 U	57	9.3
bis(2-Ethylhexyl)phthalate	56,600	37 U	22	13	**630**	48	28	86 U	24	14	44 U	23	13	71 U	71	41
Chrysene	---	18 U	18	3.3	**2200**	38	7.2	**160**	19	3.6	**32**	18	3.5	**71**	57	11
Di-n-Octyl phthalate	---	18 U	18	5.1	**29** J1	38	11	**30**	19	5.6	18 U	18	5.4	57 U	57	17
Benzo(a)pyrene	---	18 U	18	4.8	**430**	38	10	**120**	19	5.2	**19**	18	5.0	57 U	57	15
Indeno(1,2,3-cd)pyrene	---	18 U	18	4.1	**180**	38	8.9	**59**	19	4.4	18 U	18	4.3	57 U	57	13
Dibenz(a,h)anthracene	---	18 U	18	3.8	**94**	38	8.2	**17** J1	19	4.1	18 U	18	4.0	57 U	57	12
Benzo(g,h,i)perylene	---	18 U	18	3.9	**220**	38	8.4	**100**	19	4.2	**18** J1	18	4.1	57 U	57	12
1-Methylnaphthalene	16,000	18 U	18	2.3	**36** J1	38	5.1	**48**	19	2.5	18 U	18	2.5	57 U	57	7.6
Total Benzofluoranthenes	---	18 U	18	2.4	**840**	38	5.3	**220**	19	2.6	**34**	18	2.5	57 U	57	7.8
cPAH TEQ	15	ND	NA	NA	**641**	NA	NA	**163** J	NA	NA	**24** J	NA	NA	**0.71**	NA	NA
PAHs (µg/kg)																
Method SW8270D-SIM																
Naphthalene	2,100	**8.6**	4.5	2.4	**70**	8.3	4.4	**65**	9.5	5.0	**14**	4.7	2.5	14 U	14	7.3
2-Methylnaphthalene	320,000	**6.2**	4.5	1.4	**59**	8.3	2.5	**59**	9.5	2.9	**11**	4.7	1.4	14 U	14	4.2
1-Methylnaphthalene	16,000	**5.0**	4.5	1.5	**37**	8.3	2.8	**34**	9.5	3.3	**8.0**	4.7	1.6	14 U	14	4.8
Total Naphthalenes	---	**19.8**	NA	NA	**166**	NA	NA	**158**	NA	NA	**33**	NA	NA	14 U	NA	NA
Acenaphthylene	---	4.5 U	4.5	1.1	**12**	8.3	2.1	**7.8** J1	9.5	2.4	4.7 U	4.7	1.2	14 U	14	3.5
Acenaphthene	230,000	**2.9** J1	4.5	1.2	**150**	8.3	2.2	**100**	9.5	2.5	**12**	4.7	1.2	14 U	14	3.7
Fluorene	150,000	**4.2** J1	4.5	1.2	**210**	8.3	2.1	**150**	9.5	2.5	**9.6**	4.7	1.2	14 U	14	3.6
Phenanthrene	---	**19**	4.5	1.8	**800**	8.3	3.3	**350**	9.5	3.8	**48**	4.7	1.8	**12** J1	14	5.5
Anthracene	1,600,000	**3.2** J1	4.5	1.3	**1500**	25	7.3	**170**	9.5	2.8	**12**	4.7	1.4	14 U	14	4.1
Fluoranthene	230,000	**26**	4.5	1.6	**1200**	25	8.8	**710**	9.5	3.4	**55**	4.7	1.6	**8.2** J1	14	4.9
Pyrene	240,000	**24**	4.5	2.0	**980**	25	11	**530**	9.5	4.2	**50**	4.7	2.1	**10** J1	14	6.2
Benzo(a)anthracene	---	**8.1**	4.5	1.4	**300**	8.3	2.7	**150**	9.5	3.1	**22**	4.7	1.5	14 U	14	4.5
Chrysene	---	**26**	4.5	1.7	**570**	8.3	3.1	**190**	9.5	3.6	**44**	4.7	1.8	**22**	14	5.2
Benzo(a)pyrene	---	**17**	4.5	1.6	**210**	8.3	2.9	**120**	9.5	3.3	**25**	4.7	1.6	**9.6** J1	14	4.9
Indeno(1,2,3-cd)pyrene	---	**4.3** J1	4.5	3.1	**93**	8.3	5.8	**75**	9.5	6.6	**14**	4.7	3.2	14 U	14	9.7
Dibenz(a,h)anthracene	---	**5.9**	4.5	2.1	**40**	8.3	3.9	**23**	9.5	4.5	**5.8**	4.7	2.2	14 U	14	6.6
Benzo(g,h,i)perylene	---	**11**	4.5	2.7	**170**	8.3	5.1	**140**	9.5	5.8	**32**	4.7	2.8	14 U	14	8.5
Dibenzofuran	80,000	**4.6**	4.5	1.4	**130**	8.3	2.5	**110**	9.5	2.9	**7.3**	4.7	1.4	14 U	14	4.2
Total Benzofluoranthenes	---	**19**	4.5	1.7	**430**	8.3	3.1	**230**	9.5	3.5	**37**	4.7	1.7	14 U	14	5.2
cPAH TEQ	15	**21** J	NA	NA	**302**	NA	NA	**170**	NA	NA	**33**	NA	NA	**9.8**	NA	NA

TABLE M-3
MONITORING WELL BORINGS SOIL ANALYTICAL RESULTS
BOEING ISAACSON-THOMPSON
REMEDIAL INVESTIGATION

	Preliminary Cleanup Level	IT-MW-13B(5-6.5) TW45K 11/10/2011			IT-MW-13B(6.5-8) TW89A 11/11/2011			IT-MW-13B(8-9.5) TW89B 11/11/2011			IT-MW-13B(12.5-13.5) TW89C 11/11/2011			IT-MW-14(2-3.5) TW27J 11/08/2011		
		Result	Reporting Limit	Detection Limit	Result	Reporting Limit	Detection Limit	Result	Reporting Limit	Detection Limit	Result	Reporting Limit	Detection Limit	Result	Reporting Limit	Detection Limit
PCBs (µg/kg)																
Method SW8082																
Aroclor 1016	0.72	32 U	32	2.0	580 U	580	180	62 U	62	19	320 U	320	98	32 U	32	1.9
Aroclor 1242	0.72	32 U	32	2.4	580 U	580	210	62 U	62	23	320 U	320	120	32 U	32	2.3
Aroclor 1248	220	32 U	32	2.4	4600 U	4600	210	1200 U	1200	23	320 U	320	120	32 U	32	2.3
Aroclor 1254	0.29	32 U	32	2.4	**12,000**	580	210	**3000**	62	23	320 U	320	120	32 U	32	2.3
Aroclor 1260	5.4	32 U	32	2.4	1200 U	1200	210	**420**	62	23	**5200**	320	120	32 U	32	2.3
Aroclor 1221	---	32 U	32	2.4	580 U	580	210	62 U	62	23	320 U	320	120	32 U	32	2.3
Aroclor 1232	---	32 U	32	2.4	580 U	580	210	62 U	62	23	320 U	320	120	32 U	32	2.3
Total PCBs	1.8	ND	NA	NA	**12,000**	NA	NA	**3420**	NA	NA	**5200**	NA	NA	ND	NA	NA
TOTAL PETROLEUM HYDROCARBONS (mg/kg)																
NWTPH-Dx																
Diesel-Range Organics	2,000	**38**	5.3	1.4	**380** J	59	15	**220** J	58	15	**28** J	6.0	1.5	**38**	5.7	1.5
Motor Oil-Range Organics	2,000	**50**	11	1.7	**650**	120	18	**830**	120	18	**140**	12	1.9	**290**	11	1.8
NWTPH-G																
Gasoline-Range Organics	100/30	6.6 U	6.6	3.2	**120**	7.1	3.4	6.5 U	6.5	3.1	6.5 U	6.5	3.1	5.7 U	5.7	2.7
TOTAL METALS (mg/kg)																
Methods 200.8/7471A/SW7196A																
Antimony	5	0.2 U	0.2	0.014	0.2 UJ	0.2	0.015	0.2 U	0.2	0.015	0.2 U	0.2	0.015	0.2 U	0.2	0.015
Arsenic	7	**2.5**	0.2	0.092	**7.2** J	0.2	0.099	**12.1**	0.2	0.098	**8.9**	0.2	0.10	**2.4**	0.2	0.099
Barium	640	**43.6**	0.5	0.059	**69.8** J	0.6	0.064	**197**	0.6	0.063	**59.0**	0.6	0.065	**42.3**	0.6	0.064
Beryllium	160	0.2 U	0.2	0.019	**0.3**	0.2	0.020	**0.3**	0.2	0.020	0.2 U	0.2	0.021	0.2 U	0.2	0.020
Cadmium	1.3	0.1 U	0.1	0.013	**0.6**	0.1	0.014	**3.7**	0.1	0.013	**0.2**	0.1	0.014	**0.1**	0.1	0.014
Chromium	1,480	**20.8**	0.5	0.040	**25.2**	0.6	0.043	**218**	0.6	0.043	**30.5**	0.6	0.044	**20.0**	0.6	0.043
Chromium VI	3.8	0.452 U	0.452	0.030	0.463 U	0.463	0.030	0.439 U	0.439	0.030	0.465 U	0.465	0.030	0.445 U	0.445	0.030
Copper	36	**15.3**	0.5	0.038	**53.6** J	0.6	0.041	**197**	0.6	0.040	**28.1**	0.6	0.042	**37.1**	0.6	0.041
Lead	250	**5.5**	0.1	0.050	**51.8**	0.1	0.053	**348**	0.1	0.26	**17.3**	0.1	0.054	**7.3**	0.1	0.053
Mercury	1.5	0.03 U	0.03	0.0013	**0.17**	0.03	0.0013	**0.11**	0.02	0.0011	**0.02**	0.02	0.0012	0.02 U	0.02	0.0012
Nickel	210	**28.9**	0.5	0.052	**30.9** J	0.6	0.056	**170**	0.6	0.055	**17.3**	0.6	0.057	**30.0**	0.6	0.056
Selenium	1.0	0.5 U	0.5	0.10	0.6 U	0.6	0.11	0.6 U	0.6	0.11	0.6 U	0.6	0.11	0.6 U	0.6	0.11
Silver	170	0.2 U	0.2	0.0085	1.1	1.1	0.0091	1.2	1.2	0.0090	0.2 U	0.2	0.0092	0.2 U	0.2	0.0091
Thallium	0.67	0.2 U	0.2	0.0032	0.2 U	0.2	0.0034	0.2 U	0.2	0.0034	0.2 U	0.2	0.0035	0.2 U	0.2	0.0034
Zinc	1,400	**44**	4	0.36	**390** J	20	1.9	**630**	20	1.9	**72**	5	0.39	**48**	5	0.39

TABLE M-3
MONITORING WELL BORINGS SOIL ANALYTICAL RESULTS
BOEING ISAACSON-THOMPSON
REMEDIAL INVESTIGATION

	Preliminary Cleanup Level	IT-MW-14(5-6.5) TW27K 11/08/2011			IT-MW-14(8-9.5) TW27L 11/08/2011			IT-MW-14(13-14.5) TW27M 11/08/2011			IT-MW-15(2-3.5) TX21A 11/15/2011			IT-MW-15(5-6.5) TX21B 11/15/2011		
		Result	Reporting Limit	Detection Limit	Result	Reporting Limit	Detection Limit	Result	Reporting Limit	Detection Limit	Result	Reporting Limit	Detection Limit	Result	Reporting Limit	Detection Limit
VOLATILES (µg/kg)																
Method SW8260C																
Chloromethane	1,600	1.2 U	1.2	0.31	1.3 U	1.3	0.33	1.5 U	1.5	0.39	1.3 UJ	1.3	0.34	1.4 UJ	1.4	0.37
Bromomethane	---	1.2 UJ	1.2	0.22	1.3 UJ	1.3	0.23	1.5 UJ	1.5	0.28	1.3 UJ	1.3	0.24	1.4 UJ	1.4	0.26
Vinyl Chloride	7.4	1.2 U	1.2	0.28	1.3 U	1.3	0.29	1.5 U	1.5	0.35	1.3 U	1.3	0.30	1.4 U	1.4	0.33
Chloroethane	280,000	1.2 U	1.2	0.55	1.3 U	1.3	0.58	1.5 U	1.5	0.68	1.3 UJ	1.3	0.59	1.4 UJ	1.4	0.65
Methylene Chloride	2400	**2.7**	2.4	0.76	**2.9**	2.5	0.80	**4.5**	3.0	0.94	**2.7** J	2.6	0.82	**2.2** J, J1	2.8	0.89
Acetone	510,000	**65** J	6.0	0.58	**25** J	6.3	0.60	**23** J	7.4	0.71	**26** J	6.4	0.62	**51** J	7.0	0.68
Carbon Disulfide	75,000	1.2 U	1.2	0.67	1.3 U	1.3	0.70	**12**	1.5	0.82	1.3 U	1.3	0.72	1.4 U	1.4	0.78
1,1-Dichloroethene	81	1.2 U	1.2	0.40	1.3 U	1.3	0.42	1.5 U	1.5	0.50	1.3 U	1.3	0.43	1.4 U	1.4	0.47
1,1-Dichloroethane	710	1.2 UJ	1.2	0.24	1.3 UJ	1.3	0.25	1.5 UJ	1.5	0.30	1.3 UJ	1.3	0.26	1.4 UJ	1.4	0.28
trans-1,2-Dichloroethene	19,000	1.2 U	1.2	0.32	1.3 U	1.3	0.33	1.5 U	1.5	0.39	1.3 U	1.3	0.34	1.4 U	1.4	0.37
cis-1,2-Dichloroethene	2,600	1.2 U	1.2	0.29	1.3 U	1.3	0.30	1.5 U	1.5	0.35	1.3 U	1.3	0.31	1.4 U	1.4	0.34
Chloroform	200	1.2 U	1.2	0.28	1.3 U	1.3	0.29	1.5 U	1.5	0.35	1.3 U	1.3	0.30	1.4 U	1.4	0.33
1,2-Dichloroethane	70	1.2 U	1.2	0.23	1.3 U	1.3	0.24	1.5 U	1.5	0.28	1.3 U	1.3	0.25	1.4 U	1.4	0.27
2-Butanone	430,000	**3.3** J1	6.0	0.61	6.3 U	6.3	0.64	7.4 U	7.4	0.76	6.4 U	6.4	0.66	7.0 U	7.0	0.72
1,1,1-Trichloroethane	1,900,000	1.2 U	1.2	0.27	1.3 U	1.3	0.28	1.5 U	1.5	0.33	1.3 U	1.3	0.29	1.4 U	1.4	0.32
Carbon Tetrachloride	21	1.2 U	1.2	0.25	1.3 U	1.3	0.27	1.5 U	1.5	0.31	1.3 U	1.3	0.27	1.4 U	1.4	0.30
Vinyl Acetate	---	6.0 U	6.0	0.45	6.3 U	6.3	0.48	7.4 U	7.4	0.56	6.4 U	6.4	0.49	7.0 U	7.0	0.53
Bromodichloromethane	89	1.2 U	1.2	0.30	1.3 U	1.3	0.32	1.5 U	1.5	0.37	1.3 U	1.3	0.33	1.4 U	1.4	0.36
1,2-Dichloropropane	92	1.2 U	1.2	0.19	1.3 U	1.3	0.20	1.5 U	1.5	0.24	1.3 U	1.3	0.21	1.4 U	1.4	0.23
cis-1,3-Dichloropropene	---	1.2 U	1.2	0.27	1.3 U	1.3	0.28	1.5 U	1.5	0.33	1.3 U	1.3	0.29	1.4 U	1.4	0.32
Trichloroethene	51	1.2 U	1.2	0.25	1.3 U	1.3	0.27	1.5 U	1.5	0.31	**0.9** J1	1.3	0.27	**1.8**	1.4	0.30
Dibromochloromethane	---	1.2 U	1.2	0.32	1.3 U	1.3	0.33	1.5 U	1.5	0.39	1.3 U	1.3	0.34	1.4 U	1.4	0.37
1,1,2-Trichloroethane	73	1.2 U	1.2	0.34	1.3 U	1.3	0.36	1.5 U	1.5	0.42	1.3 U	1.3	0.37	1.4 U	1.4	0.40
Benzene	93	1.2 U	1.2	0.35	1.3 U	1.3	0.37	1.5 U	1.5	0.44	1.3 U	1.3	0.38	1.4 U	1.4	0.41
trans-1,3-Dichloropropene	---	1.2 U	1.2	0.26	1.3 U	1.3	0.27	1.5 U	1.5	0.32	1.3 U	1.3	0.28	1.4 U	1.4	0.30
2-Chloroethylvinylether	---	6.0 U	6.0	0.33	6.3 U	6.3	0.35	7.4 U	7.4	0.41	6.4 U	6.4	0.35	7.0 U	7.0	0.39
Bromoform	---	1.2 U	1.2	0.35	1.3 U	1.3	0.37	1.5 U	1.5	0.44	1.3 U	1.3	0.38	1.4 U	1.4	0.42
4-Methyl-2-Pentanone (MIBK)	170,000	6.0 U	6.0	0.50	6.3 U	6.3	0.53	7.4 U	7.4	0.62	6.4 U	6.4	0.54	7.0 U	7.0	0.59
2-Hexanone	32,000	6.0 U	6.0	0.52	6.3 U	6.3	0.55	7.4 U	7.4	0.65	6.4 U	6.4	0.56	7.0 U	7.0	0.61
Tetrachloroethene	260	1.2 U	1.2	0.31	1.3 U	1.3	0.32	1.5 U	1.5	0.38	1.3 U	1.3	0.33	1.4 U	1.4	0.36
1,1,2,2-Tetrachloroethane	13	1.2 U	1.2	0.30	1.3 U	1.3	0.32	1.5 U	1.5	0.37	1.3 U	1.3	0.33	1.4 U	1.4	0.35
Toluene	100,000	1.2 U	1.2	0.18	1.3 U	1.3	0.19	1.5 U	1.5	0.22	1.3 U	1.3	0.19	1.4 U	1.4	0.21
Chlorobenzene	26,000	1.2 U	1.2	0.26	1.3 U	1.3	0.27	1.5 U	1.5	0.32	1.3 U	1.3	0.28	1.4 U	1.4	0.31
Ethylbenzene	230	1.2 U	1.2	0.24	1.3 U	1.3	0.25	1.5 U	1.5	0.30	1.3 U	1.3	0.26	1.4 U	1.4	0.28
Styrene	16,000,000	1.2 U	1.2	0.16	1.3 U	1.3	0.17	1.5 U	1.5	0.20	1.3 U	1.3	0.18	1.4 U	1.4	0.19
Trichlorofluoromethane	200,000	1.2 U	1.2	0.32	1.3 U	1.3	0.33	1.5 U	1.5	0.39	1.3 U	1.3	0.34	1.4 U	1.4	0.37
1,1,2-Trichloro-1,2,2-trifuoroethane	1,000,000,000	2.4 U	2.4	0.34	2.5 U	2.5	0.36	3.0 U	3.0	0.42	2.6 U	2.6	0.37	2.8 U	2.8	0.40
m,p-Xylene	160,000	1.2 U	1.2	0.47	1.3 U	1.3	0.49	1.5 U	1.5	0.58	1.3 U	1.3	0.50	1.4 U	1.4	0.55
o-Xylene	200,000	1.2 U	1.2	0.27	1.3 U	1.3	0.28	1.5 U	1.5	0.33	1.3 U	1.3	0.29	1.4 U	1.4	0.31
1,2-Dichlorobenzene	68,000	1.2 U	1.2	0.35	1.3 U	1.3	0.37	1.5 U	1.5	0.43	1.3 U	1.3	0.38	1.4 U	1.4	0.41
1,3-Dichlorobenzene	3,840	1.2 U	1.2	0.27	1.3 U	1.3	0.28	1.5 U	1.5	0.33	1.3 U	1.3	0.29	1.4 U	1.4	0.32
1,4-Dichlorobenzene	3,500	1.2 U	1.2	0.28	1.3 U	1.3	0.29	1.5 U	1.5	0.34	1.3 U	1.3	0.30	1.4 U	1.4	0.32
Acrolein	---	60 UJ	60	4.5	63 UJ	63	4.8	74 UJ	74	5.6	64 UJ	64	4.9	70 UJ	70	5.3
Methyl Iodide	---	1.2 U	1.2	0.26	1.3 U	1.3	0.27	1.5 U	1.5	0.32	1.3 U	1.3	0.28	1.4 U	1.4	0.30
Bromoethane	---	2.4 U	2.4	0.53	2.5 U	2.5	0.55	3.0 U	3.0	0.65	2.6 U	2.6	0.57	2.8 U	2.8	0.62
Acrylonitrile	---	6.0 U	6.0	1.2	6.3 U	6.3	1.3	7.4 U	7.4	1.5	6.4 U	6.4	1.3	7.0 U	7.0	1.4
1,1-Dichloropropene	---	1.2 U	1.2	0.37	1.3 U	1.3	0.39	1.5 U	1.5	0.46	1.3 U	1.3	0.40	1.4 U	1.4	0.44
Dibromomethane	---	1.2 U	1.2	0.18	1.3 U	1.3	0.18	1.5 U	1.5	0.22	1.3 U	1.3	0.19	1.4 U	1.4	0.21
1,1,1,2-Tetrachloroethane	---	1.2 U	1.2	0.28	1.3 U	1.3	0.29	1.5 U	1.5	0.34	1.3 U	1.3	0.30	1.4 U	1.4	0.33
1,2-Dibromo-3-chloropropane	---	6.0 U	6.0	0.70	6.3 U	6.3	0.73	7.4 U	7.4	0.86	6.4 U	6.4	0.75	7.0 U	7.0	0.82
1,2,3-Trichloropropane	---	2.4 U	2.4	0.62	2.5 U	2.5	0.65	3.0 U	3.0	0.76	2.6 U	2.6	0.66	2.8 U	2.8	0.72
trans-1,4-Dichloro-2-butene	---	6.0 U	6.0	0.52	6.3 U	6.3	0.55	7.4 U	7.4	0.64	6.4 U	6.4	0.56	7.0 U	7.0	0.61
1,3,5-Trimethylbenzene	800,000	1.2 U	1.2	0.30	1.3 U	1.3	0.32	1.5 U	1.5	0.37	1.3 U	1.3	0.33	1.4 U	1.4	0.36
1,2,4-Trimethylbenzene	800,000	1.2 U	1.2	0.27	1.3 U	1.3	0.29	1.5 U	1.5	0.34	1.3 U	1.3	0.30	1.4 U	1.4	0.32
Hexachlorobutadiene	---	6.0 U	6.0	0.49	6.3 U	6.3	0.51	7.4 U	7.4	0.60	6.4 U	6.4	0.53	7.0 U	7.0	0.57

TABLE M-3
MONITORING WELL BORINGS SOIL ANALYTICAL RESULTS
BOEING ISAACSON-THOMPSON
REMEDIAL INVESTIGATION

	Preliminary Cleanup Level	IT-MW-14(5-6.5) TW27K 11/08/2011			IT-MW-14(8-9.5) TW27L 11/08/2011			IT-MW-14(13-14.5) TW27M 11/08/2011			IT-MW-15(2-3.5) TX21A 11/15/2011			IT-MW-15(5-6.5) TX21B 11/15/2011		
		Result	Reporting Limit	Detection Limit	Result	Reporting Limit	Detection Limit	Result	Reporting Limit	Detection Limit	Result	Reporting Limit	Detection Limit	Result	Reporting Limit	Detection Limit
Ethylene Dibromide	---	1.2 U	1.2	0.21	1.3 U	1.3	0.22	1.5 U	1.5	0.26	1.3 U	1.3	0.23	1.4 U	1.4	0.25
Bromochloromethane	---	1.2 U	1.2	0.39	1.3 U	1.3	0.40	1.5 U	1.5	0.48	1.3 U	1.3	0.42	1.4 U	1.4	0.45
2,2-Dichloropropane	---	1.2 U	1.2	0.35	1.3 U	1.3	0.37	1.5 U	1.5	0.43	1.3 U	1.3	0.38	1.4 U	1.4	0.41
1,3-Dichloropropane	---	1.2 U	1.2	0.25	1.3 U	1.3	0.26	1.5 U	1.5	0.31	1.3 U	1.3	0.27	1.4 U	1.4	0.29
Isopropylbenzene	78,000	1.2 U	1.2	0.28	1.3 U	1.3	0.29	1.5 U	1.5	0.34	1.3 U	1.3	0.30	1.4 U	1.4	0.33
n-Propylbenzene	11,000	1.2 U	1.2	0.32	1.3 U	1.3	0.34	1.5 U	1.5	0.40	1.3 U	1.3	0.35	1.4 U	1.4	0.38
Bromobenzene	---	1.2 U	1.2	0.18	1.3 U	1.3	0.19	1.5 U	1.5	0.23	1.3 U	1.3	0.20	1.4 U	1.4	0.21
2-Chlorotoluene	---	1.2 U	1.2	0.36	1.3 U	1.3	0.38	1.5 U	1.5	0.44	1.3 U	1.3	0.39	1.4 U	1.4	0.42
4-Chlorotoluene	400,000	1.2 U	1.2	0.33	1.3 U	1.3	0.35	1.5 U	1.5	0.41	1.3 U	1.3	0.36	1.4 U	1.4	0.39
tert-Butylbenzene	---	1.2 U	1.2	0.37	1.3 U	1.3	0.38	1.5 U	1.5	0.45	1.3 U	1.3	0.39	1.4 U	1.4	0.43
sec-Butylbenzene	---	1.2 U	1.2	0.29	1.3 U	1.3	0.30	1.5 U	1.5	0.35	1.3 U	1.3	0.31	1.4 U	1.4	0.34
4-Isopropyltoluene	---	1.2 U	1.2	0.28	1.3 U	1.3	0.30	1.5 U	1.5	0.35	1.3 U	1.3	0.30	1.4 U	1.4	0.33
n-Butylbenzene	27,000	1.2 U	1.2	0.31	1.3 U	1.3	0.33	1.5 U	1.5	0.39	1.3 U	1.3	0.34	1.4 U	1.4	0.37
1,2,4-Trichlorobenzene	80	6.0 U	6.0	0.40	6.3 U	6.3	0.42	7.4 U	7.4	0.49	6.4 U	6.4	0.43	7.0 U	7.0	0.46
Naphthalene	2,100	6.0 U	6.0	0.51	6.3 U	6.3	0.54	7.4 U	7.4	0.63	6.4 U	6.4	0.55	7.0 U	7.0	0.60
1,2,3-Trichlorobenzene	---	6.0 U	6.0	0.36	6.3 U	6.3	0.38	7.4 U	7.4	0.45	6.4 U	6.4	0.39	7.0 U	7.0	0.43
SEMIVOLATILES (µg/kg)																
Method SW8270D																
Phenol	1,900,000	55 U	55	24	56 U	56	24	20 U	20	8.5	20 U	20	8.4	19 U	19	8.4
Bis-(2-Chloroethyl) Ether	---	55 U	55	9.3	56 U	56	9.4	20 U	20	3.3	20 U	20	3.3	19 U	19	3.2
2-Chlorophenol	---	55 U	55	6.6	56 U	56	6.7	20 U	20	2.3	20 U	20	2.3	19 U	19	2.3
1,3-Dichlorobenzene	3,840	55 U	55	7.3	56 U	56	7.4	20 U	20	2.6	20 U	20	2.6	19 U	19	2.6
1,4-Dichlorobenzene	3,500	55 U	55	7.9	56 U	56	8.0	20 U	20	2.8	20 U	20	2.8	19 U	19	2.8
Benzyl Alcohol	8,000,000	55 U	55	17	56 U	56	17	20 U	20	6.0	20 U	20	5.9	19 U	19	5.9
1,2-Dichlorobenzene	68,000	55 U	55	6.9	56 U	56	7.0	20 U	20	2.5	20 U	20	2.4	19 U	19	2.4
2-Methylphenol	250,000	55 U	55	15	56 U	56	15	20 U	20	5.2	20 U	20	5.1	19 U	19	5.1
2,2'-Oxybis(1-Chloropropane)	---	55 U	55	10	56 U	56	11	20 U	20	3.7	20 U	20	3.7	19 U	19	3.6
4-Methylphenol	41,000	110 U	110	18	110 U	110	19	39 U	39	6.5	39 U	39	6.5	39 U	39	6.4
N-Nitroso-Di-N-Propylamine	---	55 U	55	9.3	56 U	56	9.5	20 U	20	3.3	20 U	20	3.3	19 U	19	3.3
Hexachloroethane	---	55 U	55	8.1	56 U	56	8.3	20 U	20	2.9	20 U	20	2.9	19 U	19	2.9
Nitrobenzene	---	55 U	55	11	56 U	56	11	20 U	20	4.0	20 U	20	4.0	19 U	19	3.9
Isophorone	---	55 U	55	7.9	56 U	56	8.0	20 U	20	2.8	20 U	20	2.8	19 U	19	2.8
2-Nitrophenol	---	280 U	280	110	280 U	280	110	98 U	98	38	98 U	98	38	97 U	97	38
2,4-Dimethylphenol	95,000	110 U	110	9.6	110 U	110	9.7	39 U	39	3.4	39 U	39	3.4	39 U	39	3.4
Benzoic Acid	9,000	1100 U	1100	280	1100 U	1100	280	390 U	390	99	390 U	390	99	390 U	390	98
bis(2-Chloroethoxy) Methane	---	55 U	55	5.5	56 U	56	5.6	20 U	20	2.0	20 U	20	2.0	19 U	19	1.9
2,4-Dichlorophenol	---	550 U	550	60	560 U	560	61	200 U	200	21	200 U	200	21	190 U	190	21
1,2,4-Trichlorobenzene	80	55 U	55	9.6	56 U	56	9.8	20 U	20	3.4	20 U	20	3.4	19 U	19	3.4
Naphthalene	2,100	55 U	55	7.6	56 U	56	7.8	20 U	20	2.7	20 U	20	2.7	19 U	19	2.7
4-Chloroaniline	---	750 U	750	62	760 U	760	63	260 U	260	22	260 U	260	22	260 U	260	22
Hexachlorobutadiene	---	280 U	280	13	280 U	280	13	98 U	98	4.5	98 U	98	4.5	97 U	97	4.4
4-Chloro-3-methylphenol	740,000	280 U	280	42	280 U	280	42	98 U	98	15	98 U	98	15	97 U	97	15
2-Methylnaphthalene	320,000	55 U	55	8.5	56 U	56	8.6	20 U	20	3.0	20 U	20	3.0	19 U	19	3.0
Hexachlorocyclopentadiene	---	1100 U	1100	180	1100 U	1100	190	390 U	390	65	390 U	390	65	390 U	390	64
2,4,6-Trichlorophenol	---	280 U	280	62	280 U	280	63	98 U	98	22	98 U	98	22	97 U	97	22
2,4,5-Trichlorophenol	---	280 U	280	59	280 U	280	60	98 U	98	21	98 U	98	21	97 U	97	21
2-Chloronaphthalene	---	55 U	55	7.3	56 U	56	7.4	20 U	20	2.6	20 U	20	2.6	19 U	19	2.6
2-Nitroaniline	---	280 U	280	51	280 U	280	52	98 U	98	18	98 U	98	18	97 U	97	18
Dimethylphthalate	71	55 U	55	8.0	56 U	56	8.2	20 U	20	2.8	20 U	20	2.8	19 U	19	2.8
Acenaphthylene	---	55 U	55	16	56 U	56	16	20 U	20	5.6	20 U	20	5.6	19 U	19	5.5
3-Nitroaniline	---	280 U	280	62	280 U	280	63	98 U	98	22	98 U	98	22	97 U	97	22
Acenaphthene	230,000	55 U	55	9.1	56 U	56	9.2	20 U	20	3.2	20 U	20	3.2	19 U	19	3.2
2,4-Dinitrophenol	---	2400 U	2400	310	2400 U	2400	310	840 U	840	110	830 U	830	110	820 U	820	110
4-Nitrophenol	---	280 U	280	96	280 U	280	98	98 U	98	34	98 U	98	34	97 U	97	34
Dibenzofuran	80,000	55 U	55	11	56 U	56	12	20 U	20	4.0	20 U	20	4.0	19 U	19	4.0
2,6-Dinitrotoluene	---	280 U	280	85	280 U	280	86	98 U	98	30	98 U	98	30	97 U	97	30

TABLE M-3
MONITORING WELL BORINGS SOIL ANALYTICAL RESULTS
BOEING ISAACSON-THOMPSON
REMEDIAL INVESTIGATION

	Preliminary Cleanup Level	IT-MW-14(5-6.5) TW27K 11/08/2011			IT-MW-14(8-9.5) TW27L 11/08/2011			IT-MW-14(13-14.5) TW27M 11/08/2011			IT-MW-15(2-3.5) TX21A 11/15/2011			IT-MW-15(5-6.5) TX21B 11/15/2011		
		Result	Reporting Limit	Detection Limit	Result	Reporting Limit	Detection Limit	Result	Reporting Limit	Detection Limit	Result	Reporting Limit	Detection Limit	Result	Reporting Limit	Detection Limit
2,4-Dinitrotoluene	---	280 U	280	54	280 U	280	55	98 U	98	19	98 U	98	19	97 U	97	19
Diethylphthalate	178,000	140 U	140	100	140 U	140	100	49 U	49	36	49 U	49	36	48 U	48	35
4-Chlorophenyl-phenylether	---	55 U	55	15	56 U	56	15	20 U	20	5.2	20 U	20	5.2	19 U	19	5.1
Fluorene	150,000	55 U	55	12	56 U	56	12	20 U	20	4.3	20 U	20	4.2	19 U	19	4.2
4-Nitroaniline	---	280 U	280	100	280 U	280	110	98 U	98	37	98 U	98	37	97 U	97	37
4,6-Dinitro-2-Methylphenol	---	550 U	550	59	560 U	560	60	200 U	200	21	200 U	200	21	190 U	190	21
N-Nitrosodiphenylamine	204,000	55 U	55	15	56 U	56	15	20 U	20	5.3	20 U	20	5.3	19 U	19	5.2
4-Bromophenyl-phenylether	---	55 U	55	14	56 U	56	14	20 U	20	4.9	20 U	20	4.9	19 U	19	4.9
Hexachlorobenzene	---	55 U	55	12	56 U	56	12	20 U	20	4.2	20 U	20	4.2	19 U	19	4.2
Pentachlorophenol	---	550 U	550	130	560 U	560	140	200 U	200	48	200 U	200	47	190 U	190	47
Phenanthrene	---	**53** J1	55	10	**39** J1	56	10	20 U	20	3.6	20 U	20	3.6	19 U	19	3.5
Carbazole	50,000	55 U	55	7.4	56 U	56	7.6	20 U	20	2.6	20 U	20	2.6	19 U	19	2.6
Anthracene	1,600,000	55 U	55	12	56 U	56	13	20 U	20	4.4	20 U	20	4.4	19 U	19	4.4
Di-n-Butylphthalate	26,000	55 U	55	23	56 U	56	23	20 U	20	8.0	20 U	20	8.0	19 U	19	7.9
Fluoranthene	230,000	**50** J1	55	8.1	**28** J1	56	8.2	20 U	20	2.9	20 U	20	2.8	19 U	19	2.8
Pyrene	240,000	**78**	55	5.4	**31** J1	56	5.5	20 U	20	1.9	20 U	20	1.9	19 U	19	1.9
Butylbenzylphthalate	1,700	55 U	55	17	56 U	56	17	20 U	20	6.0	20 U	20	6.0	19 U	19	6.0
3,3'-Dichlorobenzidine	---	420 U	420	49	420 U	420	50	150 U	150	17	150 U	150	17	140 U	140	17
Benzo(a)anthracene	---	**39** J1	55	9.1	**34** J1	56	9.3	20 U	20	3.2	20 U	20	3.2	19 U	19	3.2
bis(2-Ethylhexyl)phthalate	56,600	**58** J1	69	40	**56** J1	70	41	**23** J1	25	14	130 U	24	14	**240**	24	14
Chrysene	---	**86**	55	10	**65**	56	11	20 U	20	3.7	20 U	20	3.7	19 U	19	3.6
Di-n-Octyl phthalate	---	55 U	55	16	56 U	56	16	20 U	20	5.7	20 U	20	5.7	19 U	19	5.7
Benzo(a)pyrene	---	**42** J1	55	15	56 U	56	15	20 U	20	5.4	20 U	20	5.3	19 U	19	5.3
Indeno(1,2,3-cd)pyrene	---	55 U	55	13	56 U	56	13	20 U	20	4.6	20 U	20	4.6	19 U	19	4.5
Dibenz(a,h)anthracene	---	55 U	55	12	56 U	56	12	20 U	20	4.2	20 U	20	4.2	19 U	19	4.2
Benzo(g,h,i)perylene	---	55 U	55	12	56 U	56	12	20 U	20	4.3	20 U	20	4.3	19 U	19	4.3
1-Methylnaphthalene	16,000	55 U	55	7.4	56 U	56	7.5	20 U	20	2.6	20 U	20	2.6	19 U	19	2.6
Total Benzofluoranthenes	---	**69**	55	7.6	**37** J1	56	7.7	20 U	20	2.7	20 U	20	2.7	19 U	19	2.7
cPAH TEQ	15	**54** J	NA	NA	**7.8** J	NA	NA	ND	NA	NA	ND	NA	NA	ND	NA	NA
PAHs (µg/kg)																
Method SW8270D-SIM																
Naphthalene	2,100	**9.0** J1	14	7.6	**10** J1	12	6.4	**2.7** J1	4.9	2.6	**2.8** J1	4.9	2.6	4.9 U	4.9	2.6
2-Methylnaphthalene	320,000	**14** J1	14	4.4	**12** J1	12	3.7	**2.6** J1	4.9	1.5	4.9 U	4.9	1.5	4.9 U	4.9	1.5
1-Methylnaphthalene	16,000	**13** J1	14	4.9	**10** J1	12	4.2	4.9 U	4.9	1.7	4.9 U	4.9	1.7	4.9 U	4.9	1.7
Total Naphthalenes	---	**36.0** J1	NA	NA	**32** J1	NA	NA	**5.3** J1	NA	NA	**2.8** J1	NA	NA	4.9 U	NA	NA
Acenaphthylene	---	14 U	14	3.6	12 U	12	3.1	4.9 U	4.9	1.2	4.9 U	4.9	1.2	4.9 U	4.9	1.2
Acenaphthene	230,000	14 U	14	3.8	12 U	12	3.2	4.9 U	4.9	1.3	**2.6** J1	4.9	1.3	4.9 U	4.9	1.3
Fluorene	150,000	**11** J1	14	3.7	12 U	12	3.1	4.9 U	4.9	1.3	4.9 U	4.9	1.3	4.9 U	4.9	1.3
Phenanthrene	---	**40**	14	5.7	**28**	12	4.8	**2.8** J1	4.9	1.9	**22**	4.9	1.9	**5.5**	4.9	1.9
Anthracene	1,600,000	**12** J1	14	4.2	12 U	12	3.6	4.9 U	4.9	1.4	**4.4** J1	4.9	1.4	4.9 U	4.9	1.4
Fluoranthene	230,000	**30**	14	5.1	**16**	12	4.3	4.9 U	4.9	1.7	**20**	4.9	1.7	**4.7** J1	4.9	1.7
Pyrene	240,000	**40**	14	6.4	**19**	12	5.4	4.9 U	4.9	2.2	**23**	4.9	2.2	**4.4** J1	4.9	2.2
Benzo(a)anthracene	---	**34**	14	4.6	**13**	12	3.9	4.9 U	4.9	1.6	**10**	4.9	1.6	**2.5** J1	4.9	1.6
Chrysene	---	**120**	14	5.4	**39**	12	4.6	**2.4** J1	4.9	1.8	**12**	4.9	1.8	**3.3** J1	4.9	1.8
Benzo(a)pyrene	---	**26**	14	5.1	**15**	12	4.3	4.9 U	4.9	1.7	**12**	4.9	1.7	**2.6** J1	4.9	1.7
Indeno(1,2,3-cd)pyrene	---	**14** J1	14	10	12 U	12	8.4	4.9 U	4.9	3.4	**7.4**	4.9	3.4	4.9 U	4.9	3.4
Dibenz(a,h)anthracene	---	**19**	14	6.9	12 U	12	5.8	4.9 U	4.9	2.3	**3.3** J1	4.9	2.3	4.9 U	4.9	2.3
Benzo(g,h,i)perylene	---	**26**	14	8.8	**17**	12	7.4	4.9 U	4.9	3.0	**8.6**	4.9	3.0	4.9 U	4.9	3.0
Dibenzofuran	80,000	14 U	14	4.4	12 U	12	3.7	4.9 U	4.9	1.5	4.9 U	4.9	1.5	4.9 U	4.9	1.5
Total Benzofluoranthenes	---	**41**	14	5.3	**24**	12	4.5	4.9 U	4.9	1.8	**17**	4.9	1.8	4.9 U	4.9	1.8
cPAH TEQ	15	**38**	NA	NA	**19**	NA	NA	**0.02**	NA	NA	**16**	NA	NA	**2.9** J	NA	NA

TABLE M-3
MONITORING WELL BORINGS SOIL ANALYTICAL RESULTS
BOEING ISAACSON-THOMPSON
REMEDIAL INVESTIGATION

	Preliminary Cleanup Level	IT-MW-14(5-6.5) TW27K 11/08/2011			IT-MW-14(8-9.5) TW27L 11/08/2011			IT-MW-14(13-14.5) TW27M 11/08/2011			IT-MW-15(2-3.5) TX21A 11/15/2011			IT-MW-15(5-6.5) TX21B 11/15/2011		
		Result	Reporting Limit	Detection Limit	Result	Reporting Limit	Detection Limit	Result	Reporting Limit	Detection Limit	Result	Reporting Limit	Detection Limit	Result	Reporting Limit	Detection Limit
PCBs (µg/kg)																
Method SW8082																
Aroclor 1016	0.72	32 U	32	1.9	33 U	33	2.0	31 U	31	1.9	32 U	32	1.9	32 U	32	1.9
Aroclor 1242	0.72	32 U	32	2.3	33 U	33	2.4	31 U	31	2.3	32 U	32	2.3	32 U	32	2.3
Aroclor 1248	220	32 U	32	2.3	33 U	33	2.4	31 U	31	2.3	32 U	32	2.3	32 U	32	2.3
Aroclor 1254	0.29	32 U	32	2.3	33 U	33	2.4	31 U	31	2.3	32 U	32	2.3	32 U	32	2.3
Aroclor 1260	5.4	32 U	32	2.3	33 U	33	2.4	31 U	31	2.3	32 U	32	2.3	32 U	32	2.3
Aroclor 1221	---	32 U	32	2.3	33 U	33	2.4	31 U	31	2.3	32 U	32	2.3	32 U	32	2.3
Aroclor 1232	---	32 U	32	2.3	33 U	33	2.4	31 U	31	2.3	32 U	32	2.3	32 U	32	2.3
Total PCBs	1.8	ND	NA	NA	ND	NA	NA	ND	NA	NA	ND	NA	NA	ND	NA	NA
TOTAL PETROLEUM HYDROCARBONS (mg/kg)																
NWTPH-Dx																
Diesel-Range Organics	2,000	**76**	5.6	1.4	**52**	6.0	1.5	6.2 U	6.2	1.6	6.0 U	6.0	1.5	6.4 U	6.4	1.6
Motor Oil-Range Organics	2,000	**460**	11	1.8	**250**	12	1.9	12 U	12	2.0	12 U	12	1.9	13 U	13	2.0
NWTPH-G																
Gasoline-Range Organics	100/30	7.0 U	7.0	3.4	8.0 U	8.0	3.8	9.0 U	9.0	4.3	8.1 U	8.1	3.9	7.0 U	7.0	3.3
TOTAL METALS (mg/kg)																
Methods 200.8/7471A/SW7196A																
Antimony	5	0.2 U	0.2	0.015	0.2 U	0.2	0.016	0.3 U	0.3	0.017	0.2 UJ	0.2	0.015	0.2 U	0.2	0.015
Arsenic	7	**4.7**	0.2	0.10	**7.2**	0.2	0.10	**1.6**	0.3	0.11	**7.3**	0.2	0.10	**3.0**	0.2	0.10
Barium	640	**50.6**	0.6	0.065	**60.5**	0.6	0.068	**26.4**	0.6	0.071	**51.0**	0.6	0.066	**44.2**	0.6	0.065
Beryllium	160	0.2 U	0.2	0.021	0.2 U	0.2	0.022	0.3 U	0.3	0.023	0.2 U	0.2	0.021	0.2 U	0.2	0.021
Cadmium	1.3	**0.2**	0.1	0.014	**0.1**	0.1	0.014	**0.7**	0.1	0.015	0.1 U	0.1	0.014	0.1 U	0.1	0.014
Chromium	1,480	**14.7**	0.6	0.044	**16.1**	0.6	0.046	**18.9**	0.6	0.048	**15.0**	0.6	0.044	**12.2**	0.6	0.044
Chromium VI	3.8	0.489 U	0.489	0.030	0.488 U	0.488	0.030	0.520 U	0.520	0.030	0.475 U	0.475	0.030	0.500 U	0.500	0.030
Copper	36	**23.7**	0.6	0.042	**29.0**	0.6	0.043	**42.8**	0.6	0.046	**15.7**	0.6	0.042	**17.2**	0.6	0.042
Lead	250	**11.6**	0.1	0.055	**23.6**	0.1	0.057	**8.5**	0.1	0.060	**17.1** J	0.1	0.055	**3.4**	0.1	0.054
Mercury	1.5	**0.05**	0.02	0.0012	**0.05**	0.03	0.0015	0.02 U	0.02	0.0012	**0.11**	0.02	0.0013	**0.07**	0.03	0.0013
Nickel	210	**16.0**	0.6	0.057	**13.6**	0.6	0.059	**5.7**	0.6	0.062	**15.5**	0.6	0.057	**10.8**	0.6	0.057
Selenium	1.0	0.6 U	0.6	0.12	0.6 U	0.6	0.12	0.6 U	0.6	0.13	0.6 U	0.6	0.12	0.6 U	0.6	0.11
Silver	170	0.2 U	0.2	0.0093	0.2 U	0.2	0.0096	0.3 U	0.3	0.010	0.2 U	0.2	0.0094	0.2 U	0.2	0.0093
Thallium	0.67	0.2 U	0.2	0.0035	0.2 U	0.2	0.0036	0.3 U	0.3	0.0038	0.2 U	0.2	0.0035	0.2 U	0.2	0.0035
Zinc	1,400	**59**	5	0.39	**94**	5	0.41	**80**	5	0.43	**51**	5	0.40	**27**	5	0.39

TABLE M-3
MONITORING WELL BORINGS SOIL ANALYTICAL RESULTS
BOEING ISAACSON-THOMPSON
REMEDIAL INVESTIGATION

	Preliminary Cleanup Level	IT-MW-15(8-9.5) TX21C 11/15/2011			IT-MW-15(12.5-14) TX21D 11/15/2011			IT-MW-16(2-3.5) TW45L 11/10/2011			IT-MW-16(5-6.5) TW45M 11/10/2011			IT-MW-16(8-9.5) TW45N 11/10/2011		
		Result	Reporting Limit	Detection Limit	Result	Reporting Limit	Detection Limit	Result	Reporting Limit	Detection Limit	Result	Reporting Limit	Detection Limit	Result	Reporting Limit	Detection Limit
VOLATILES (µg/kg)																
Method SW8260C																
Chloromethane	1,600	1.4 UJ	1.4	0.37	1.4 UJ	1.4	0.37	1.3 UJ	1.3	0.33	1.1 UJ	1.1	0.28	1.3 UJ	1.3	0.34
Bromomethane	---	1.4 UJ	1.4	0.27	1.4 UJ	1.4	0.27	1.3 UJ	1.3	0.24	1.1 UJ	1.1	0.20	1.3 UJ	1.3	0.24
Vinyl Chloride	7.4	1.4 U	1.4	0.33	1.4 U	1.4	0.33	1.3 U	1.3	0.30	1.1 U	1.1	0.25	1.3 U	1.3	0.31
Chloroethane	280,000	1.4 UJ	1.4	0.66	1.4 UJ	1.4	0.66	1.3 UJ	1.3	0.58	1.1 UJ	1.1	0.49	1.3 UJ	1.3	0.60
Methylene Chloride	2400	**3.1** J	2.8	0.90	**2.0** J, J1	2.8	0.90	**3.6**	2.5	0.80	**3.3**	2.1	0.67	**5.7**	2.6	0.83
Acetone	510,000	**22** J	7.1	0.69	**19** J	7.1	0.68	**37**	6.3	0.61	**30**	5.3	0.51	**38**	6.5	0.63
Carbon Disulfide	75,000	1.4 U	1.4	0.80	1.4 U	1.4	0.79	**1.7**	1.3	0.70	1.1 U	1.1	0.59	**3.8**	1.3	0.73
1,1-Dichloroethene	81	1.4 U	1.4	0.48	1.4 U	1.4	0.48	1.3 U	1.3	0.42	1.1 U	1.1	0.36	1.3 U	1.3	0.44
1,1-Dichloroethane	710	1.4 UJ	1.4	0.29	1.4 UJ	1.4	0.29	1.3 U	1.3	0.26	1.1 U	1.1	0.22	1.3 U	1.3	0.27
trans-1,2-Dichloroethene	19,000	1.4 U	1.4	0.38	1.4 U	1.4	0.38	1.3 U	1.3	0.34	1.1 U	1.1	0.28	1.3 U	1.3	0.35
cis-1,2-Dichloroethene	2,600	1.4 U	1.4	0.34	1.4 U	1.4	0.34	1.3 U	1.3	0.30	1.1 U	1.1	0.25	1.3 U	1.3	0.31
Chloroform	200	1.4 U	1.4	0.33	1.4 U	1.4	0.33	1.3 U	1.3	0.29	1.1 U	1.1	0.25	1.3 U	1.3	0.31
1,2-Dichloroethane	70	1.4 U	1.4	0.27	1.4 U	1.4	0.27	1.3 U	1.3	0.24	1.1 U	1.1	0.20	1.3 U	1.3	0.25
2-Butanone	430,000	7.1 U	7.1	0.73	7.1 U	7.1	0.73	**3.2** J1	6.3	0.65	5.3 U	5.3	0.54	**5.0** J1	6.5	0.67
1,1,1-Trichloroethane	1,900,000	1.4 U	1.4	0.32	1.4 U	1.4	0.32	1.3 U	1.3	0.28	1.1 U	1.1	0.24	1.3 U	1.3	0.30
Carbon Tetrachloride	21	1.4 U	1.4	0.30	1.4 U	1.4	0.30	1.3 U	1.3	0.27	1.1 U	1.1	0.23	1.3 U	1.3	0.28
Vinyl Acetate	---	7.1 U	7.1	0.54	7.1 U	7.1	0.54	6.3 U	6.3	0.48	5.3 U	5.3	0.40	6.5 U	6.5	0.50
Bromodichloromethane	89	1.4 U	1.4	0.36	1.4 U	1.4	0.36	1.3 U	1.3	0.32	1.1 U	1.1	0.27	1.3 U	1.3	0.33
1,2-Dichloropropane	92	1.4 U	1.4	0.23	1.4 U	1.4	0.23	1.3 U	1.3	0.20	1.1 U	1.1	0.17	1.3 U	1.3	0.21
cis-1,3-Dichloropropene	---	1.4 U	1.4	0.32	1.4 U	1.4	0.32	1.3 U	1.3	0.28	1.1 U	1.1	0.24	1.3 U	1.3	0.30
Trichloroethene	51	**1.6**	1.4	0.30	**1.2** J1	1.4	0.30	1.3 U	1.3	0.27	1.1 U	1.1	0.22	1.3 U	1.3	0.28
Dibromochloromethane	---	1.4 U	1.4	0.38	1.4 U	1.4	0.38	1.3 U	1.3	0.34	1.1 U	1.1	0.28	1.3 U	1.3	0.35
1,1,2-Trichloroethane	73	1.4 U	1.4	0.41	1.4 U	1.4	0.41	1.3 U	1.3	0.36	1.1 U	1.1	0.30	1.3 U	1.3	0.37
Benzene	93	1.4 U	1.4	0.42	1.4 U	1.4	0.42	**1.7**	1.3	0.37	**0.5** J1	1.1	0.31	**1.1** J1	1.3	0.39
trans-1,3-Dichloropropene	---	1.4 U	1.4	0.31	1.4 U	1.4	0.31	1.3 U	1.3	0.27	1.1 U	1.1	0.23	1.3 U	1.3	0.28
2-Chloroethylvinylether	---	7.1 U	7.1	0.39	7.1 U	7.1	0.39	6.3 U	6.3	0.35	5.3 U	5.3	0.29	6.5 U	6.5	0.36
Bromoform	---	1.4 U	1.4	0.42	1.4 U	1.4	0.42	1.3 U	1.3	0.37	1.1 U	1.1	0.31	1.3 U	1.3	0.39
4-Methyl-2-Pentanone (MIBK)	170,000	7.1 U	7.1	0.60	7.1 U	7.1	0.60	6.3 U	6.3	0.53	5.3 U	5.3	0.44	6.5 U	6.5	0.55
2-Hexanone	32,000	7.1 U	7.1	0.63	7.1 U	7.1	0.62	6.3 U	6.3	0.55	5.3 U	5.3	0.47	6.5 U	6.5	0.57
Tetrachloroethene	260	1.4 U	1.4	0.37	1.4 U	1.4	0.37	1.3 U	1.3	0.32	1.1 U	1.1	0.27	1.3 U	1.3	0.34
1,1,2,2-Tetrachloroethane	13	1.4 U	1.4	0.36	1.4 U	1.4	0.36	1.3 U	1.3	0.32	1.1 U	1.1	0.27	1.3 U	1.3	0.33
Toluene	100,000	1.4 U	1.4	0.22	1.4 U	1.4	0.21	**0.9** J1	1.3	0.19	1.1 U	1.1	0.16	**0.9** J1	1.3	0.20
Chlorobenzene	26,000	1.4 U	1.4	0.31	1.4 U	1.4	0.31	1.3 U	1.3	0.28	1.1 U	1.1	0.23	1.3 U	1.3	0.29
Ethylbenzene	230	1.4 U	1.4	0.29	1.4 U	1.4	0.29	1.3 U	1.3	0.25	1.1 U	1.1	0.21	1.3 U	1.3	0.26
Styrene	16,000,000	1.4 U	1.4	0.20	1.4 U	1.4	0.20	1.3 U	1.3	0.17	1.1 U	1.1	0.15	1.3 U	1.3	0.18
Trichlorofluoromethane	200,000	1.4 U	1.4	0.38	1.4 U	1.4	0.38	1.3 U	1.3	0.34	1.1 U	1.1	0.28	1.3 U	1.3	0.35
1,1,2-Trichloro-1,2,2-trifuoroethane	1,000,000,000	2.8 U	2.8	0.41	2.8 U	2.8	0.41	2.5 U	2.5	0.36	2.1 U	2.1	0.30	2.6 U	2.6	0.38
m,p-Xylene	160,000	1.4 U	1.4	0.56	1.4 U	1.4	0.56	1.3 U	1.3	0.49	1.1 U	1.1	0.42	1.3 U	1.3	0.51
o-Xylene	200,000	1.4 U	1.4	0.32	1.4 U	1.4	0.32	1.3 U	1.3	0.28	1.1 U	1.1	0.24	1.3 U	1.3	0.29
1,2-Dichlorobenzene	68,000	1.4 U	1.4	0.42	1.4 U	1.4	0.42	1.3 U	1.3	0.37	1.1 U	1.1	0.31	1.3 U	1.3	0.38
1,3-Dichlorobenzene	3,840	1.4 U	1.4	0.32	1.4 U	1.4	0.32	1.3 U	1.3	0.29	1.1 U	1.1	0.24	1.3 U	1.3	0.30
1,4-Dichlorobenzene	3,500	1.4 U	1.4	0.33	1.4 U	1.4	0.33	1.3 U	1.3	0.29	1.1 U	1.1	0.25	1.3 U	1.3	0.30
Acrolein	---	71 UJ	71	5.4	71 UJ	71	5.4	63 U	63	4.8	53 U	53	4.0	65 U	65	5.0
Methyl Iodide	---	1.4 U	1.4	0.31	1.4 U	1.4	0.31	1.3 U	1.3	0.27	1.1 U	1.1	0.23	1.3 U	1.3	0.28
Bromoethane	---	2.8 U	2.8	0.63	2.8 U	2.8	0.62	2.5 U	2.5	0.55	2.1 U	2.1	0.47	2.6 U	2.6	0.58
Acrylonitrile	---	7.1 U	7.1	1.5	7.1 U	7.1	1.5	6.3 U	6.3	1.3	5.3 U	5.3	1.1	6.5 U	6.5	1.3
1,1-Dichloropropene	---	1.4 U	1.4	0.44	1.4 U	1.4	0.44	1.3 U	1.3	0.39	1.1 U	1.1	0.33	1.3 U	1.3	0.41
Dibromomethane	---	1.4 U	1.4	0.21	1.4 U	1.4	0.21	1.3 U	1.3	0.19	1.1 U	1.1	0.16	1.3 U	1.3	0.19
1,1,1,2-Tetrachloroethane	---	1.4 U	1.4	0.33	1.4 U	1.4	0.33	1.3 U	1.3	0.29	1.1 U	1.1	0.25	1.3 U	1.3	0.30
1,2-Dibromo-3-chloropropane	---	7.1 U	7.1	0.83	7.1 U	7.1	0.83	6.3 U	6.3	0.74	5.3 U	5.3	0.62	6.5 U	6.5	0.77
1,2,3-Trichloropropane	---	2.8 U	2.8	0.74	2.8 U	2.8	0.73	2.5 U	2.5	0.65	2.1 U	2.1	0.55	2.6 U	2.6	0.68
trans-1,4-Dichloro-2-butene	---	7.1 U	7.1	0.62	7.1 U	7.1	0.62	6.3 U	6.3	0.55	5.3 U	5.3	0.46	6.5 U	6.5	0.57
1,3,5-Trimethylbenzene	800,000	1.4 U	1.4	0.36	1.4 U	1.4	0.36	1.3 U	1.3	0.32	1.1 U	1.1	0.27	1.3 U	1.3	0.33
1,2,4-Trimethylbenzene	800,000	1.4 U	1.4	0.33	1.4 U	1.4	0.33	1.3 U	1.3	0.29	1.1 U	1.1	0.24	1.3 U	1.3	0.30
Hexachlorobutadiene	---	7.1 U	7.1	0.58	7.1 U	7.1	0.58	6.3 U	6.3	0.52	5.3 U	5.3	0.43	6.5 U	6.5	0.54

TABLE M-3
MONITORING WELL BORINGS SOIL ANALYTICAL RESULTS
BOEING ISAACSON-THOMPSON
REMEDIAL INVESTIGATION

	Preliminary Cleanup Level	IT-MW-15(8-9.5) TX21C 11/15/2011			IT-MW-15(12.5-14) TX21D 11/15/2011			IT-MW-16(2-3.5) TW45L 11/10/2011			IT-MW-16(5-6.5) TW45M 11/10/2011			IT-MW-16(8-9.5) TW45N 11/10/2011		
		Result	Reporting Limit	Detection Limit	Result	Reporting Limit	Detection Limit	Result	Reporting Limit	Detection Limit	Result	Reporting Limit	Detection Limit	Result	Reporting Limit	Detection Limit
Ethylene Dibromide	---	1.4 U	1.4	0.25	1.4 U	1.4	0.25	1.3 U	1.3	0.22	1.1 U	1.1	0.19	1.3 U	1.3	0.23
Bromochloromethane	---	1.4 U	1.4	0.46	1.4 U	1.4	0.46	1.3 U	1.3	0.41	1.1 U	1.1	0.34	1.3 U	1.3	0.42
2,2-Dichloropropane	---	1.4 U	1.4	0.42	1.4 U	1.4	0.41	1.3 U	1.3	0.37	1.1 U	1.1	0.31	1.3 U	1.3	0.38
1,3-Dichloropropane	---	1.4 U	1.4	0.30	1.4 U	1.4	0.30	1.3 U	1.3	0.26	1.1 U	1.1	0.22	1.3 U	1.3	0.27
Isopropylbenzene	78,000	1.4 U	1.4	0.33	1.4 U	1.4	0.33	1.3 U	1.3	0.29	1.1 U	1.1	0.25	1.3 U	1.3	0.30
n-Propylbenzene	11,000	1.4 U	1.4	0.39	1.4 U	1.4	0.39	1.3 U	1.3	0.34	1.1 U	1.1	0.29	1.3 U	1.3	0.36
Bromobenzene	---	1.4 U	1.4	0.22	1.4 U	1.4	0.22	1.3 U	1.3	0.19	1.1 U	1.1	0.16	1.3 U	1.3	0.20
2-Chlorotoluene	---	1.4 U	1.4	0.43	1.4 U	1.4	0.43	1.3 U	1.3	0.38	1.1 U	1.1	0.32	1.3 U	1.3	0.39
4-Chlorotoluene	400,000	1.4 U	1.4	0.39	1.4 U	1.4	0.39	1.3 U	1.3	0.35	1.1 U	1.1	0.29	1.3 U	1.3	0.36
tert-Butylbenzene	---	1.4 U	1.4	0.44	1.4 U	1.4	0.43	1.3 U	1.3	0.39	1.1 U	1.1	0.32	1.3 U	1.3	0.40
sec-Butylbenzene	---	1.4 U	1.4	0.34	1.4 U	1.4	0.34	1.3 U	1.3	0.30	1.1 U	1.1	0.25	1.3 U	1.3	0.31
4-Isopropyltoluene	---	1.4 U	1.4	0.34	1.4 U	1.4	0.34	1.3 U	1.3	0.30	1.1 U	1.1	0.25	1.3 U	1.3	0.31
n-Butylbenzene	27,000	1.4 U	1.4	0.37	1.4 U	1.4	0.37	1.3 U	1.3	0.33	1.1 U	1.1	0.28	1.3 U	1.3	0.34
1,2,4-Trichlorobenzene	80	7.1 U	7.1	0.47	7.1 U	7.1	0.47	6.3 U	6.3	0.42	5.3 U	5.3	0.35	6.5 U	6.5	0.43
Naphthalene	2,100	7.1 U	7.1	0.61	7.1 U	7.1	0.61	6.3 U	6.3	0.54	5.3 U	5.3	0.45	6.5 U	6.5	0.56
1,2,3-Trichlorobenzene	---	7.1 U	7.1	0.43	7.1 U	7.1	0.43	6.3 U	6.3	0.38	5.3 U	5.3	0.32	6.5 U	6.5	0.40
SEMIVOLATILES (µg/kg)																
Method SW8270D																
Phenol	1,900,000	20 U	20	8.6	19 U	19	8.1	19 U	19	8.4	18 U	18	8.0	19 U	19	8.2
Bis-(2-Chloroethyl) Ether	---	20 U	20	3.3	19 U	19	3.1	19 U	19	3.2	18 U	18	3.1	19 U	19	3.2
2-Chlorophenol	---	20 U	20	2.4	19 U	19	2.2	19 U	19	2.3	18 U	18	2.2	19 U	19	2.3
1,3-Dichlorobenzene	3,840	20 U	20	2.6	19 U	19	2.5	19 U	19	2.5	18 U	18	2.4	19 U	19	2.5
1,4-Dichlorobenzene	3,500	20 U	20	2.8	19 U	19	2.7	19 U	19	2.8	18 U	18	2.6	19 U	19	2.7
Benzyl Alcohol	8,000,000	20 U	20	6.0	19 U	19	5.7	19 U	19	5.9	18 U	18	5.6	19 U	19	5.8
1,2-Dichlorobenzene	68,000	20 U	20	2.5	19 U	19	2.3	19 U	19	2.4	18 U	18	2.3	19 U	19	2.4
2-Methylphenol	250,000	20 U	20	5.2	19 U	19	4.9	19 U	19	5.1	18 U	18	4.9	19 U	19	5.0
2,2'-Oxybis(1-Chloropropane)	---	20 U	20	3.7	19 U	19	3.5	19 U	19	3.6	18 U	18	3.5	19 U	19	3.6
4-Methylphenol	41,000	40 U	40	6.6	37 U	37	6.2	39 U	39	6.4	37 U	37	6.1	38 U	38	6.3
N-Nitroso-Di-N-Propylamine	---	20 U	20	3.3	19 U	19	3.1	19 U	19	3.3	18 U	18	3.1	19 U	19	3.2
Hexachloroethane	---	20 U	20	2.9	19 U	19	2.7	19 U	19	2.8	18 U	18	2.7	19 U	19	2.8
Nitrobenzene	---	20 U	20	4.0	19 U	19	3.8	19 U	19	3.9	18 U	18	3.8	19 U	19	3.8
Isophorone	---	20 U	20	2.8	19 U	19	2.7	19 U	19	2.8	18 U	18	2.6	19 U	19	2.7
2-Nitrophenol	---	99 U	99	38	94 U	94	36	97 U	97	37	92 U	92	36	95 U	95	37
2,4-Dimethylphenol	95,000	40 U	40	3.4	37 U	37	3.2	39 U	39	3.3	37 U	37	3.2	38 U	38	3.3
Benzoic Acid	9,000	400 U	400	100	370 U	370	94	390 U	390	98	370 U	370	93	380 U	380	96
bis(2-Chloroethoxy) Methane	---	20 U	20	2.0	19 U	19	1.9	19 U	19	1.9	18 U	18	1.9	19 U	19	1.9
2,4-Dichlorophenol	---	200 U	200	21	190 U	190	20	190 U	190	21	180 U	180	20	190 U	190	20
1,2,4-Trichlorobenzene	80	20 U	20	3.4	19 U	19	3.3	19 U	19	3.4	18 U	18	3.2	19 U	19	3.3
Naphthalene	2,100	20 U	20	2.7	19 U	19	2.6	19 U	19	2.7	18 U	18	2.6	19 U	19	2.6
4-Chloroaniline	---	270 U	270	22	250 U	250	21	260 U	260	22	250 U	250	21	260 U	260	21
Hexachlorobutadiene	---	99 U	99	4.5	94 U	94	4.3	97 U	97	4.4	92 U	92	4.2	95 U	95	4.3
4-Chloro-3-methylphenol	740,000	99 U	99	15	94 U	94	14	97 U	97	15	92 U	92	14	95 U	95	14
2-Methylnaphthalene	320,000	20 U	20	3.0	19 U	19	2.9	19 U	19	3.0	18 U	18	2.8	19 U	19	2.9
Hexachlorocyclopentadiene	---	400 U	400	66	370 U	370	62	390 U	390	64	370 U	370	61	380 U	380	63
2,4,6-Trichlorophenol	---	99 U	99	22	94 U	94	21	97 U	97	22	92 U	92	21	95 U	95	21
2,4,5-Trichlorophenol	---	99 U	99	21	94 U	94	20	97 U	97	21	92 U	92	20	95 U	95	20
2-Chloronaphthalene	---	20 U	20	2.6	19 U	19	2.5	19 U	19	2.6	18 U	18	2.4	19 U	19	2.5
2-Nitroaniline	---	99 U	99	18	94 U	94	17	97 U	97	18	92 U	92	17	95 U	95	17
Dimethylphthalate	71	20 U	20	2.9	19 U	19	2.7	19 U	19	2.8	18 U	18	2.7	19 U	19	2.7
Acenaphthylene	---	20 U	20	5.7	19 U	19	5.3	19 U	19	5.5	18 U	18	5.3	19 U	19	5.4
3-Nitroaniline	---	99 U	99	22	94 U	94	21	97 U	97	22	92 U	92	21	95 U	95	21
Acenaphthene	230,000	20 U	20	3.2	19 U	19	3.1	19 U	19	3.2	18 U	18	3.0	19 U	19	3.1
2,4-Dinitrophenol	---	840 U	840	110	790 U	790	100	820 UJ	820	110	790 UJ	790	100	800 UJ	800	110
4-Nitrophenol	---	99 U	99	34	94 U	94	32	97 U	97	34	92 U	92	32	95 U	95	33
Dibenzofuran	80,000	20 U	20	4.1	19 U	19	3.8	19 U	19	4.0	18 U	18	3.8	19 U	19	3.9
2,6-Dinitrotoluene	---	99 U	99	30	94 U	94	29	97 U	97	30	92 U	92	28	95 U	95	29

TABLE M-3
MONITORING WELL BORINGS SOIL ANALYTICAL RESULTS
BOEING ISAACSON-THOMPSON
REMEDIAL INVESTIGATION

	Preliminary Cleanup Level	IT-MW-15(8-9.5) TX21C 11/15/2011			IT-MW-15(12.5-14) TX21D 11/15/2011			IT-MW-16(2-3.5) TW45L 11/10/2011			IT-MW-16(5-6.5) TW45M 11/10/2011			IT-MW-16(8-9.5) TW45N 11/10/2011		
		Result	Reporting Limit	Detection Limit	Result	Reporting Limit	Detection Limit	Result	Reporting Limit	Detection Limit	Result	Reporting Limit	Detection Limit	Result	Reporting Limit	Detection Limit
2,4-Dinitrotoluene	---	99 U	99	19	94 U	94	18	97 U	97	19	92 U	92	18	95 U	95	18
Diethylphthalate	178,000	50 U	50	36	47 U	47	34	48 U	48	35	46 U	46	34	47 U	47	35
4-Chlorophenyl-phenylether	---	20 U	20	5.2	19 U	19	4.9	19 U	19	5.1	18 U	18	4.9	19 U	19	5.0
Fluorene	150,000	20 U	20	4.3	19 U	19	4.1	19 U	19	4.2	18 U	18	4.0	19 U	19	4.1
4-Nitroaniline	---	99 U	99	38	94 U	94	35	97 U	97	37	92 U	92	35	95 U	95	36
4,6-Dinitro-2-Methylphenol	---	200 U	200	21	190 U	190	20	190 U	190	21	180 U	180	20	190 U	190	20
N-Nitrosodiphenylamine	204,000	20 U	20	5.3	19 U	19	5.0	19 U	19	5.2	18 U	18	5.0	19 U	19	5.1
4-Bromophenyl-phenylether	---	20 U	20	5.0	19 U	19	4.7	19 U	19	4.9	18 U	18	4.7	19 U	19	4.8
Hexachlorobenzene	---	20 U	20	4.2	19 U	19	4.0	19 U	19	4.2	18 U	18	4.0	19 U	19	4.1
Pentachlorophenol	---	200 U	200	48	190 U	190	45	190 U	190	47	180 U	180	45	190 U	190	46
Phenanthrene	---	20 U	20	3.6	19 U	19	3.4	**88**	19	3.5	18 U	18	3.4	**26**	19	3.4
Carbazole	50,000	20 U	20	2.7	19 U	19	2.5	19 U	19	2.6	18 U	18	2.5	19 U	19	2.5
Anthracene	1,600,000	20 U	20	4.5	19 U	19	4.2	**19**	19	4.4	18 U	18	4.2	19 U	19	4.3
Di-n-Butylphthalate	26,000	20 U	20	8.1	19 U	19	7.6	19 U	19	7.9	18 U	18	7.5	19 U	19	7.7
Fluoranthene	230,000	20 U	20	2.9	19 U	19	2.7	**110**	19	2.8	18 U	18	2.7	**26**	19	2.8
Pyrene	240,000	20 U	20	1.9	19 U	19	1.8	**160** J	19	1.9	18 U	18	1.8	**37** J	19	1.8
Butylbenzylphthalate	1,700	20 U	20	6.1	19 U	19	5.7	19 U	19	5.9	18 U	18	5.7	19 U	19	5.8
3,3'-Dichlorobenzidine	---	150 U	150	18	140 U	140	17	140 UJ	140	17	140 UJ	140	16	140 UJ	140	17
Benzo(a)anthracene	---	20 U	20	3.3	19 U	19	3.1	**80**	19	3.2	18 U	18	3.0	**19**	19	3.1
bis(2-Ethylhexyl)phthalate	56,600	180 U	25	14	23 U	23	14	34 U	24	14	32 U	23	14	67 U	24	14
Chrysene	---	20 U	20	3.7	19 U	19	3.5	**98**	19	3.6	18 U	18	3.5	**32**	19	3.5
Di-n-Octyl phthalate	---	20 U	20	5.8	19 U	19	5.5	19 U	19	5.7	18 U	18	5.4	19 U	19	5.5
Benzo(a)pyrene	---	20 U	20	5.4	19 U	19	5.1	**110**	19	5.3	18 U	18	5.0	**25**	19	5.2
Indeno(1,2,3-cd)pyrene	---	20 U	20	4.6	19 U	19	4.4	**50**	19	4.5	18 U	18	4.3	**13** J1	19	4.4
Dibenz(a,h)anthracene	---	20 U	20	4.3	19 U	19	4.0	**13** J1	19	4.2	18 U	18	4.0	19 U	19	4.1
Benzo(g,h,i)perylene	---	20 U	20	4.4	19 U	19	4.1	**54**	19	4.3	18 U	18	4.1	**21**	19	4.2
1-Methylnaphthalene	16,000	20 U	20	2.7	19 U	19	2.5	19 U	19	2.6	18 U	18	2.5	19 U	19	2.5
Total Benzofluoranthenes	---	20 U	20	2.7	19 U	19	2.6	**130**	19	2.7	18 U	18	2.5	**33**	19	2.6
cPAH TEQ	15	ND	NA	NA	ND	NA	NA	**138** J	NA	NA	ND	NA	NA	**32** J	NA	NA
PAHs (µg/kg)																
Method SW8270D-SIM																
Naphthalene	2,100	4.7 U	4.7	2.5	**5.0**	4.7	2.5	**5.7**	4.6	2.4	4.7 U	4.7	2.5	**5.8**	4.6	2.4
2-Methylnaphthalene	320,000	4.7 U	4.7	1.4	**2.5** J1	4.7	1.4	**4.0** J1	4.6	1.4	4.7 U	4.7	1.4	**4.7**	4.6	1.4
1-Methylnaphthalene	16,000	4.7 U	4.7	1.6	**2.5** J1	4.7	1.6	**4.4** J1	4.6	1.6	**2.6** J1	4.7	1.6	**4.0** J1	4.6	1.6
Total Naphthalenes	---	4.7 U	NA	NA	**10.0** J1	NA	NA	**14.1** J1	NA	NA	**2.6** J1	NA	NA	**14.5** J1	NA	NA
Acenaphthylene	---	4.7 U	4.7	1.2	4.7 U	4.7	1.2	**4.0** J1	4.6	1.2	4.7 U	4.7	1.2	**2.8** J1	4.6	1.2
Acenaphthene	230,000	4.7 U	4.7	1.2	4.7 U	4.7	1.2	4.6 U	4.6	1.2	4.7 U	4.7	1.2	**4.0** J1	4.6	1.2
Fluorene	150,000	4.7 U	4.7	1.2	4.7 U	4.7	1.2	**2.7** J1	4.6	1.2	4.7 U	4.7	1.2	**3.2** J1	4.6	1.2
Phenanthrene	---	**2.7** J1	4.7	1.8	**3.9** J1	4.7	1.9	**32**	4.6	1.8	**6.1**	4.7	1.9	**36**	4.6	1.8
Anthracene	1,600,000	4.7 U	4.7	1.4	4.7 U	4.7	1.4	**7.1**	4.6	1.3	4.7 U	4.7	1.4	**5.5**	4.6	1.4
Fluoranthene	230,000	4.7 U	4.7	1.7	4.7 U	4.7	1.7	**53**	4.6	1.6	**51**	4.7	1.7	**39**	4.6	1.6
Pyrene	240,000	4.7 U	4.7	2.1	4.7 U	4.7	2.1	**60**	4.6	2.0	**170**	4.7	2.1	**44**	4.6	2.1
Benzo(a)anthracene	---	4.7 U	4.7	1.5	4.7 U	4.7	1.5	**33**	4.6	1.5	**120**	4.7	1.5	**22**	4.6	1.5
Chrysene	---	4.7 U	4.7	1.8	4.7 U	4.7	1.8	**45**	4.6	1.7	**140**	4.7	1.8	**40**	4.6	1.7
Benzo(a)pyrene	---	4.7 U	4.7	1.6	4.7 U	4.7	1.6	**51**	4.6	1.6	**250**	4.7	1.7	**33**	4.6	1.6
Indeno(1,2,3-cd)pyrene	---	4.7 U	4.7	3.2	4.7 U	4.7	3.3	**31**	4.6	3.2	**100**	4.7	3.3	**16**	4.6	3.2
Dibenz(a,h)anthracene	---	4.7 U	4.7	2.2	4.7 U	4.7	2.2	**11**	4.6	2.2	**37**	4.7	2.2	**6.7**	4.6	2.2
Benzo(g,h,i)perylene	---	4.7 U	4.7	2.8	4.7 U	4.7	2.9	**36**	4.6	2.8	**110**	4.7	2.9	**26**	4.6	2.8
Dibenzofuran	80,000	4.7 U	4.7	1.4	4.7 U	4.7	1.4	**2.5** J1	4.6	1.4	4.7 U	4.7	1.4	**3.0** J1	4.6	1.4
Total Benzofluoranthenes	---	4.7 U	4.7	1.7	4.7 U	4.7	1.7	**64**	4.6	1.7	**260**	4.7	1.7	**43**	4.6	1.7
cPAH TEQ	15	ND	NA	NA	ND	NA	NA	**65**	NA	NA	**303**	NA	NA	**42** J	NA	NA

TABLE M-3
MONITORING WELL BORINGS SOIL ANALYTICAL RESULTS
BOEING ISAACSON-THOMPSON
REMEDIAL INVESTIGATION

	Preliminary Cleanup Level	IT-MW-15(8-9.5) TX21C 11/15/2011			IT-MW-15(12.5-14) TX21D 11/15/2011			IT-MW-16(2-3.5) TW45L 11/10/2011			IT-MW-16(5-6.5) TW45M 11/10/2011			IT-MW-16(8-9.5) TW45N 11/10/2011		
		Result	Reporting Limit	Detection Limit	Result	Reporting Limit	Detection Limit	Result	Reporting Limit	Detection Limit	Result	Reporting Limit	Detection Limit	Result	Reporting Limit	Detection Limit
PCBs (µg/kg)																
Method SW8082																
Aroclor 1016	0.72	31 U	31	1.9	33 U	33	2.0	30 U	30	1.8	32 U	32	1.9	30 U	30	1.8
Aroclor 1242	0.72	31 U	31	2.3	33 U	33	2.4	30 U	30	2.3	32 U	32	2.4	30 U	30	2.2
Aroclor 1248	220	31 U	31	2.3	33 U	33	2.4	30 U	30	2.3	32 U	32	2.4	30 U	30	2.2
Aroclor 1254	0.29	31 U	31	2.3	33 U	33	2.4	30 U	30	2.3	32 U	32	2.4	30 U	30	2.2
Aroclor 1260	5.4	31 U	31	2.3	33 U	33	2.4	30 U	30	2.3	32 U	32	2.4	30 U	30	2.2
Aroclor 1221	---	31 U	31	2.3	33 U	33	2.4	30 U	30	2.3	32 U	32	2.4	30 U	30	2.2
Aroclor 1232	---	31 U	31	2.3	33 U	33	2.4	30 U	30	2.3	32 U	32	2.4	30 U	30	2.2
Total PCBs	1.8	ND	NA	NA	ND	NA	NA	ND	NA	NA	ND	NA	NA	ND	NA	NA
TOTAL PETROLEUM HYDROCARBONS (mg/kg)																
NWTPH-Dx																
Diesel-Range Organics	2,000	5.3 U	5.3	1.4	6.6 U	6.6	1.7	**12**	5.5	1.4	5.3 U	5.3	1.4	**14**	5.9	1.5
Motor Oil-Range Organics	2,000	11 U	11	1.7	13 U	13	2.1	**47**	11	1.7	**12**	11	1.7	**57**	12	1.8
NWTPH-G																
Gasoline-Range Organics	100/30	7.4 U	7.4	3.5	8.7 U	8.7	4.1	7.5 U	7.5	3.6	7.6 U	7.6	3.6	6.9 U	6.9	3.3
TOTAL METALS (mg/kg)																
Methods 200.8/7471A/SW7196A																
Antimony	5	0.2 U	0.2	0.013	0.3 U	0.3	0.017	0.2 U	0.2	0.014	0.2 U	0.2	0.014	0.2 U	0.2	0.015
Arsenic	7	**3.8**	0.2	0.090	**2.4**	0.3	0.11	**217**	0.2	0.095	**13.2**	0.2	0.096	**80.6**	0.2	0.097
Barium	640	**33.6**	0.5	0.058	**50.9**	0.7	0.074	**55.0**	0.5	0.061	**34.9**	0.6	0.062	**43.7**	0.6	0.063
Beryllium	160	0.2 U	0.2	0.019	0.3 U	0.3	0.024	0.2 U	0.2	0.020	0.2 U	0.2	0.020	0.2 U	0.2	0.020
Cadmium	1.3	0.1 U	0.1	0.012	0.1 U	0.1	0.016	**0.2**	0.1	0.013	0.1 U	0.1	0.013	**0.2**	0.1	0.013
Chromium	1,480	**8.6**	0.5	0.039	**12.4**	0.7	0.050	**18.7**	0.5	0.042	**12.1**	0.6	0.042	**20.5**	0.6	0.043
Chromium VI	3.8	0.423 U	0.423	0.030	0.533 U	0.533	0.030	0.458 U	0.458	0.030	0.457 U	0.457	0.030	0.463 U	0.463	0.030
Copper	36	**11.0**	0.5	0.037	**20.2**	0.7	0.048	**70.1**	0.5	0.040	**21.2**	0.6	0.040	**44.4**	0.6	0.040
Lead	250	**17.4**	0.1	0.049	**2.5**	0.1	0.062	**33.3**	0.1	0.052	**7.7**	0.1	0.052	**33.5**	0.1	0.053
Mercury	1.5	0.02 U	0.02	0.0012	**0.03**	0.03	0.0014	**0.15**	0.02	0.0013	0.03 U	0.03	0.0013	**0.10**	0.03	0.0014
Nickel	210	**7.9**	0.5	0.051	**9.5**	0.7	0.065	**14.0**	0.5	0.054	**9.4**	0.6	0.054	**15.4**	0.6	0.055
Selenium	1.0	0.5 U	0.5	0.10	0.7 U	0.7	0.13	0.5 U	0.5	0.11	0.6 U	0.6	0.11	0.6 U	0.6	0.11
Silver	170	0.2 U	0.2	0.0083	0.3 U	0.3	0.011	0.2 U	0.2	0.0088	0.2 U	0.2	0.0088	0.2 U	0.2	0.0089
Thallium	0.67	0.2 U	0.2	0.0031	0.3 U	0.3	0.0040	0.2 U	0.2	0.0033	0.2 U	0.2	0.0033	0.2 U	0.2	0.0034
Zinc	1,400	**29**	4	0.35	**27**	5	0.45	**129**	4	0.37	**31**	4	0.37	**75**	4	0.38

TABLE M-3
MONITORING WELL BORINGS SOIL ANALYTICAL RESULTS
BOEING ISAACSON-THOMPSON
REMEDIAL INVESTIGATION

	Preliminary Cleanup Level	IT-MW-16(12-13.5) TW45O 11/10/2011			IT-MW-17(2-3.5) TW45A 11/10/2011			IT-MW-17(5-6.5) TW45B 11/10/2011			IT-MW-17(8-9.5) TW45C 11/10/2011			IT-MW-17(11-12.5) TW45D 11/10/2011		
		Result	Reporting Limit	Detection Limit	Result	Reporting Limit	Detection Limit	Result	Reporting Limit	Detection Limit	Result	Reporting Limit	Detection Limit	Result	Reporting Limit	Detection Limit
VOLATILES (µg/kg)																
Method SW8260C																
Chloromethane	1,600	1.3 UJ	1.3	0.34	1.1 UJ	1.1	0.30	1.3 UJ	1.3	0.34	1.2 UJ	1.2	0.32	1.7 UJ	1.7	0.46
Bromomethane	---	1.3 UJ	1.3	0.24	1.1 UJ	1.1	0.21	1.3 UJ	1.3	0.24	1.2 UJ	1.2	0.23	1.7 UJ	1.7	0.32
Vinyl Chloride	7.4	1.3 U	1.3	0.30	1.1 U	1.1	0.27	1.3 U	1.3	0.30	1.2 U	1.2	0.29	1.7 U	1.7	0.41
Chloroethane	280,000	1.3 UJ	1.3	0.60	1.1 UJ	1.1	0.52	1.3 UJ	1.3	0.60	1.2 UJ	1.2	0.56	1.7 UJ	1.7	0.80
Methylene Chloride	2400	**4.1**	2.6	0.82	**2.5**	2.3	0.72	**3.7**	2.6	0.82	**4.4**	2.4	0.78	**4.9**	3.5	1.1
Acetone	510,000	**23** J	6.5	0.62	**35**	5.6	0.54	**49**	6.5	0.62	**16**	6.1	0.59	**39**	8.7	0.84
Carbon Disulfide	75,000	**1.8** J	1.3	0.72	**1.6**	1.1	0.63	1.3 U	1.3	0.72	1.2 U	1.2	0.68	1.7 U	1.7	0.97
1,1-Dichloroethene	81	1.3 U	1.3	0.43	1.1 U	1.1	0.38	1.3 U	1.3	0.43	1.2 U	1.2	0.41	1.7 U	1.7	0.58
1,1-Dichloroethane	710	1.3 UJ	1.3	0.26	1.1 U	1.1	0.23	1.3 U	1.3	0.26	1.2 U	1.2	0.25	1.7 U	1.7	0.35
trans-1,2-Dichloroethene	19,000	1.3 U	1.3	0.34	1.1 U	1.1	0.30	1.3 U	1.3	0.34	1.2 U	1.2	0.33	1.7 U	1.7	0.46
cis-1,2-Dichloroethene	2,600	1.3 U	1.3	0.31	1.1 U	1.1	0.27	1.3 U	1.3	0.31	1.2 U	1.2	0.29	1.7 U	1.7	0.42
Chloroform	200	1.3 U	1.3	0.30	1.1 U	1.1	0.26	1.3 U	1.3	0.30	1.2 U	1.2	0.29	1.7 U	1.7	0.41
1,2-Dichloroethane	70	1.3 U	1.3	0.25	1.1 U	1.1	0.22	1.3 U	1.3	0.25	1.2 U	1.2	0.23	1.7 U	1.7	0.33
2-Butanone	430,000	6.5 U	6.5	0.66	**3.7** J1	5.6	0.58	**7.7**	6.5	0.66	6.1 U	6.1	0.63	8.7 U	8.7	0.89
1,1,1-Trichloroethane	1,900,000	1.3 U	1.3	0.29	1.1 U	1.1	0.26	1.3 U	1.3	0.29	1.2 U	1.2	0.28	1.7 U	1.7	0.39
Carbon Tetrachloride	21	1.3 U	1.3	0.28	1.1 U	1.1	0.24	1.3 U	1.3	0.28	1.2 U	1.2	0.26	1.7 U	1.7	0.37
Vinyl Acetate	---	6.5 UJ	6.5	0.49	5.6 U	5.6	0.43	6.5 U	6.5	0.49	6.1 U	6.1	0.47	8.7 U	8.7	0.66
Bromodichloromethane	89	1.3 U	1.3	0.33	1.1 U	1.1	0.29	1.3 U	1.3	0.33	1.2 U	1.2	0.31	1.7 U	1.7	0.44
1,2-Dichloropropane	92	1.3 U	1.3	0.21	1.1 U	1.1	0.18	1.3 U	1.3	0.21	1.2 U	1.2	0.20	1.7 U	1.7	0.28
cis-1,3-Dichloropropene	---	1.3 U	1.3	0.29	1.1 U	1.1	0.26	1.3 U	1.3	0.29	1.2 U	1.2	0.28	1.7 U	1.7	0.39
Trichloroethene	51	1.3 U	1.3	0.27	1.1 U	1.1	0.24	1.3 U	1.3	0.27	1.2 U	1.2	0.26	1.7 U	1.7	0.37
Dibromochloromethane	---	1.3 U	1.3	0.34	1.1 U	1.1	0.30	1.3 U	1.3	0.34	1.2 U	1.2	0.33	1.7 U	1.7	0.46
1,1,2-Trichloroethane	73	1.3 U	1.3	0.37	1.1 U	1.1	0.32	1.3 U	1.3	0.37	1.2 U	1.2	0.35	1.7 U	1.7	0.50
Benzene	93	**1.1** J1	1.3	0.38	**2.1**	1.1	0.33	**1.1** J1	1.3	0.38	1.2 U	1.2	0.36	**1.9**	1.7	0.51
trans-1,3-Dichloropropene	---	1.3 U	1.3	0.28	1.1 U	1.1	0.24	1.3 U	1.3	0.28	1.2 U	1.2	0.26	1.7 U	1.7	0.38
2-Chloroethylvinylether	---	6.5 U	6.5	0.36	5.6 U	5.6	0.31	6.5 U	6.5	0.36	6.1 U	6.1	0.34	8.7 U	8.7	0.48
Bromoform	---	1.3 U	1.3	0.38	1.1 U	1.1	0.34	1.3 U	1.3	0.38	1.2 U	1.2	0.36	1.7 U	1.7	0.52
4-Methyl-2-Pentanone (MIBK)	170,000	6.5 U	6.5	0.54	5.6 U	5.6	0.47	6.5 U	6.5	0.54	6.1 U	6.1	0.51	8.7 U	8.7	0.73
2-Hexanone	32,000	6.5 U	6.5	0.57	5.6 U	5.6	0.50	6.5 U	6.5	0.57	6.1 U	6.1	0.54	8.7 U	8.7	0.76
Tetrachloroethene	260	1.3 U	1.3	0.33	1.1 U	1.1	0.29	1.3 U	1.3	0.33	1.2 U	1.2	0.31	1.7 U	1.7	0.45
1,1,2,2-Tetrachloroethane	13	1.3 U	1.3	0.33	1.1 U	1.1	0.29	1.3 U	1.3	0.33	1.2 U	1.2	0.31	1.7 U	1.7	0.44
Toluene	100,000	**0.6** J1	1.3	0.20	**1.6**	1.1	0.17	**1.1** J1	1.3	0.20	1.2 U	1.2	0.18	**1.4** J1	1.7	0.26
Chlorobenzene	26,000	1.3 U	1.3	0.28	1.1 U	1.1	0.25	1.3 U	1.3	0.28	1.2 U	1.2	0.27	1.7 U	1.7	0.38
Ethylbenzene	230	1.3 U	1.3	0.26	1.1 U	1.1	0.23	1.3 U	1.3	0.26	1.2 U	1.2	0.25	1.7 U	1.7	0.35
Styrene	16,000,000	1.3 U	1.3	0.18	1.1 U	1.1	0.16	1.3 U	1.3	0.18	1.2 U	1.2	0.17	1.7 U	1.7	0.24
Trichlorofluoromethane	200,000	1.3 U	1.3	0.34	1.1 U	1.1	0.30	1.3 U	1.3	0.34	1.2 U	1.2	0.33	1.7 U	1.7	0.46
1,1,2-Trichloro-1,2,2-trifuoroethane	1,000,000,000	2.6 U	2.6	0.37	2.3 U	2.3	0.32	2.6 U	2.6	0.37	2.4 U	2.4	0.35	3.5 U	3.5	0.50
m,p-Xylene	160,000	1.3 U	1.3	0.51	**0.7** J1	1.1	0.44	1.3 U	1.3	0.51	1.2 U	1.2	0.48	1.7 U	1.7	0.68
o-Xylene	200,000	1.3 U	1.3	0.29	1.1 U	1.1	0.25	1.3 U	1.3	0.29	1.2 U	1.2	0.27	1.7 U	1.7	0.39
1,2-Dichlorobenzene	68,000	1.3 U	1.3	0.38	1.1 U	1.1	0.33	1.3 U	1.3	0.38	1.2 U	1.2	0.36	1.7 U	1.7	0.51
1,3-Dichlorobenzene	3,840	1.3 U	1.3	0.29	1.1 U	1.1	0.26	1.3 U	1.3	0.29	1.2 U	1.2	0.28	1.7 U	1.7	0.39
1,4-Dichlorobenzene	3,500	1.3 UJ	1.3	0.30	1.1 U	1.1	0.26	1.3 U	1.3	0.30	1.2 U	1.2	0.28	1.7 U	1.7	0.40
Acrolein	---	65 UJ	65	4.9	56 U	56	4.3	65 U	65	4.9	61 U	61	4.7	87 U	87	6.6
Methyl Iodide	---	1.3 U	1.3	0.28	1.1 U	1.1	0.24	1.3 U	1.3	0.28	1.2 U	1.2	0.26	1.7 U	1.7	0.37
Bromoethane	---	2.6 U	2.6	0.57	2.3 U	2.3	0.50	2.6 U	2.6	0.57	2.4 U	2.4	0.54	3.5 U	3.5	0.76
Acrylonitrile	---	6.5 U	6.5	1.3	5.6 U	5.6	1.2	6.5 U	6.5	1.3	6.1 U	6.1	1.3	8.7 U	8.7	1.8
1,1-Dichloropropene	---	1.3 U	1.3	0.40	1.1 U	1.1	0.35	1.3 U	1.3	0.40	1.2 U	1.2	0.38	1.7 U	1.7	0.54
Dibromomethane	---	1.3 U	1.3	0.19	1.1 U	1.1	0.17	1.3 U	1.3	0.19	1.2 U	1.2	0.18	1.7 U	1.7	0.26
1,1,1,2-Tetrachloroethane	---	1.3 U	1.3	0.30	1.1 U	1.1	0.26	1.3 U	1.3	0.30	1.2 U	1.2	0.28	1.7 U	1.7	0.40
1,2-Dibromo-3-chloropropane	---	6.5 U	6.5	0.76	5.6 U	5.6	0.66	6.5 U	6.5	0.76	6.1 U	6.1	0.72	8.7 U	8.7	1.0
1,2,3-Trichloropropane	---	2.6 U	2.6	0.67	2.3 U	2.3	0.58	2.6 U	2.6	0.67	2.4 U	2.4	0.63	3.5 U	3.5	0.90
trans-1,4-Dichloro-2-butene	---	6.5 U	6.5	0.56	5.6 U	5.6	0.49	6.5 U	6.5	0.56	6.1 U	6.1	0.53	8.7 U	8.7	0.76
1,3,5-Trimethylbenzene	800,000	1.3 U	1.3	0.33	1.1 U	1.1	0.29	1.3 U	1.3	0.33	1.2 U	1.2	0.31	1.7 U	1.7	0.44
1,2,4-Trimethylbenzene	800,000	1.3 U	1.3	0.30	1.1 U	1.1	0.26	1.3 U	1.3	0.30	1.2 U	1.2	0.28	1.7 U	1.7	0.40
Hexachlorobutadiene	---	6.5 U	6.5	0.53	5.6 U	5.6	0.46	6.5 U	6.5	0.53	6.1 U	6.1	0.50	8.7 U	8.7	0.71

TABLE M-3
MONITORING WELL BORINGS SOIL ANALYTICAL RESULTS
BOEING ISAACSON-THOMPSON
REMEDIAL INVESTIGATION

	Preliminary Cleanup Level	IT-MW-16(12-13.5) TW45O 11/10/2011			IT-MW-17(2-3.5) TW45A 11/10/2011			IT-MW-17(5-6.5) TW45B 11/10/2011			IT-MW-17(8-9.5) TW45C 11/10/2011			IT-MW-17(11-12.5) TW45D 11/10/2011		
		Result	Reporting Limit	Detection Limit	Result	Reporting Limit	Detection Limit	Result	Reporting Limit	Detection Limit	Result	Reporting Limit	Detection Limit	Result	Reporting Limit	Detection Limit
Ethylene Dibromide	---	1.3 U	1.3	0.23	1.1 U	1.1	0.20	1.3 U	1.3	0.23	1.2 U	1.2	0.22	1.7 U	1.7	0.31
Bromochloromethane	---	1.3 U	1.3	0.42	1.1 U	1.1	0.36	1.3 U	1.3	0.42	1.2 U	1.2	0.39	1.7 U	1.7	0.56
2,2-Dichloropropane	---	1.3 U	1.3	0.38	1.1 U	1.1	0.33	1.3 U	1.3	0.38	1.2 U	1.2	0.36	1.7 U	1.7	0.51
1,3-Dichloropropane	---	1.3 U	1.3	0.27	1.1 U	1.1	0.24	1.3 U	1.3	0.27	1.2 U	1.2	0.26	1.7 U	1.7	0.36
Isopropylbenzene	78,000	1.3 U	1.3	0.30	1.1 U	1.1	0.26	1.3 U	1.3	0.30	1.2 U	1.2	0.28	1.7 U	1.7	0.40
n-Propylbenzene	11,000	1.3 U	1.3	0.35	1.1 U	1.1	0.31	1.3 U	1.3	0.35	1.2 U	1.2	0.33	1.7 U	1.7	0.47
Bromobenzene	---	1.3 U	1.3	0.20	1.1 U	1.1	0.17	1.3 U	1.3	0.20	1.2 U	1.2	0.19	1.7 U	1.7	0.27
2-Chlorotoluene	---	1.3 U	1.3	0.39	1.1 U	1.1	0.34	1.3 U	1.3	0.39	1.2 U	1.2	0.37	1.7 U	1.7	0.52
4-Chlorotoluene	400,000	1.3 U	1.3	0.36	1.1 U	1.1	0.31	1.3 U	1.3	0.36	1.2 U	1.2	0.34	1.7 U	1.7	0.48
tert-Butylbenzene	---	1.3 U	1.3	0.40	1.1 U	1.1	0.35	1.3 U	1.3	0.40	1.2 U	1.2	0.37	1.7 U	1.7	0.53
sec-Butylbenzene	---	1.3 U	1.3	0.31	1.1 U	1.1	0.27	1.3 U	1.3	0.31	1.2 U	1.2	0.29	1.7 U	1.7	0.42
4-Isopropyltoluene	---	1.3 U	1.3	0.30	1.1 U	1.1	0.27	1.3 U	1.3	0.30	1.2 U	1.2	0.29	1.7 U	1.7	0.41
n-Butylbenzene	27,000	1.3 U	1.3	0.34	1.1 U	1.1	0.30	1.3 U	1.3	0.34	1.2 U	1.2	0.32	1.7 U	1.7	0.45
1,2,4-Trichlorobenzene	80	6.5 UJ	6.5	0.43	5.6 U	5.6	0.37	6.5 U	6.5	0.43	6.1 U	6.1	0.41	8.7 U	8.7	0.58
Naphthalene	2,100	6.5 U	6.5	0.55	5.6 U	5.6	0.48	6.5 U	6.5	0.55	6.1 U	6.1	0.52	**2.2** J1	8.7	0.74
1,2,3-Trichlorobenzene	---	6.5 U	6.5	0.39	5.6 U	5.6	0.34	6.5 U	6.5	0.39	6.1 U	6.1	0.37	8.7 U	8.7	0.53
SEMIVOLATILES (µg/kg)																
Method SW8270D																
Phenol	1,900,000	19 U	19	8.1	18 U	18	7.8	**9.0** J1	18	7.8	18 U	18	7.9	19 UJ	19	8.1
Bis-(2-Chloroethyl) Ether	---	19 U	19	3.1	18 U	18	3.0	18 U	18	3.0	18 U	18	3.0	19 U	19	3.1
2-Chlorophenol	---	19 U	19	2.2	18 U	18	2.2	18 U	18	2.2	18 U	18	2.2	19 UJ	19	2.2
1,3-Dichlorobenzene	3,840	19 U	19	2.5	18 U	18	2.4	18 U	18	2.4	18 U	18	2.4	19 U	19	2.5
1,4-Dichlorobenzene	3,500	19 U	19	2.7	18 U	18	2.6	18 U	18	2.6	18 U	18	2.6	19 U	19	2.7
Benzyl Alcohol	8,000,000	19 U	19	5.7	18 U	18	5.5	18 U	18	5.5	18 U	18	5.5	19 U	19	5.7
1,2-Dichlorobenzene	68,000	19 U	19	2.3	18 U	18	2.3	18 U	18	2.3	18 U	18	2.3	19 U	19	2.3
2-Methylphenol	250,000	19 U	19	4.9	18 U	18	4.7	18 U	18	4.7	18 U	18	4.8	19 UJ	19	4.9
2,2'-Oxybis(1-Chloropropane)	---	19 U	19	3.5	18 U	18	3.4	18 U	18	3.4	18 U	18	3.4	19 U	19	3.5
4-Methylphenol	41,000	38 U	38	6.2	36 U	36	6.0	36 U	36	6.0	36 U	36	6.0	37 UJ	37	6.2
N-Nitroso-Di-N-Propylamine	---	19 U	19	3.1	18 U	18	3.0	18 U	18	3.0	18 U	18	3.1	19 U	19	3.1
Hexachloroethane	---	19 U	19	2.8	18 U	18	2.7	18 U	18	2.6	18 U	18	2.7	19 U	19	2.7
Nitrobenzene	---	19 U	19	3.8	18 U	18	3.7	18 U	18	3.7	18 U	18	3.7	19 U	19	3.8
Isophorone	---	19 U	19	2.7	18 U	18	2.6	18 U	18	2.6	18 U	18	2.6	19 U	19	2.7
2-Nitrophenol	---	94 U	94	36	90 U	90	35	90 U	90	35	91 U	91	35	93 UJ	93	36
2,4-Dimethylphenol	95,000	38 U	38	3.2	36 U	36	3.1	36 U	36	3.1	36 U	36	3.1	37 UJ	37	3.2
Benzoic Acid	9,000	380 U	380	95	360 U	360	91	360 U	360	91	360 U	360	92	370 UJ	370	94
bis(2-Chloroethoxy) Methane	---	19 U	19	1.9	18 U	18	1.8	18 U	18	1.8	18 U	18	1.8	19 U	19	1.9
2,4-Dichlorophenol	---	190 U	190	20	180 U	180	19	180 U	180	19	180 U	180	20	190 UJ	190	20
1,2,4-Trichlorobenzene	80	19 U	19	3.3	18 U	18	3.1	18 U	18	3.1	18 U	18	3.2	19 U	19	3.2
Naphthalene	2,100	19 U	19	2.6	**24**	18	2.5	**9.9** J1	18	2.5	18 U	18	2.5	**39**	19	2.6
4-Chloroaniline	---	250 U	250	21	240 U	240	20	240 U	240	20	240 U	240	20	250 U	250	21
Hexachlorobutadiene	---	94 U	94	4.3	90 U	90	4.1	90 U	90	4.1	91 U	91	4.2	93 U	93	4.3
4-Chloro-3-methylphenol	740,000	94 U	94	14	90 U	90	14	90 U	90	14	91 U	91	14	93 UJ	93	14
2-Methylnaphthalene	320,000	19 U	19	2.9	**30**	18	2.8	**15** J1	18	2.8	18 U	18	2.8	**63**	19	2.9
Hexachlorocyclopentadiene	---	380 U	380	62	360 U	360	60	360 U	360	60	360 U	360	60	370 U	370	62
2,4,6-Trichlorophenol	---	94 U	94	21	90 U	90	20	90 U	90	20	91 U	91	20	93 UJ	93	21
2,4,5-Trichlorophenol	---	94 U	94	20	90 U	90	19	90 U	90	19	91 U	91	19	93 UJ	93	20
2-Chloronaphthalene	---	19 U	19	2.5	18 U	18	2.4	18 U	18	2.4	18 U	18	2.4	19 U	19	2.5
2-Nitroaniline	---	94 U	94	17	90 U	90	17	90 U	90	17	91 U	91	17	93 U	93	17
Dimethylphthalate	71	19 U	19	2.7	18 U	18	2.6	18 U	18	2.6	18 U	18	2.6	19 U	19	2.7
Acenaphthylene	---	19 U	19	5.4	18 U	18	5.2	18 U	18	5.1	18 U	18	5.2	19 U	19	5.3
3-Nitroaniline	---	94 U	94	21	90 U	90	20	90 U	90	20	91 U	91	20	93 U	93	21
Acenaphthene	230,000	19 U	19	3.1	**10** J1	18	3.0	18 U	18	3.0	18 U	18	3.0	19 U	19	3.1
2,4-Dinitrophenol	---	800 UJ	800	100	770 U	770	100	760 U	760	100	770 U	770	100	790 UJ	790	100
4-Nitrophenol	---	94 U	94	33	90 U	90	31	90 U	90	31	91 U	91	32	93 UJ	93	32
Dibenzofuran	80,000	19 U	19	3.8	**13** J1	18	3.7	18 U	18	3.7	18 U	18	3.7	**10** J1	19	3.8
2,6-Dinitrotoluene	---	94 U	94	29	90 U	90	28	90 U	90	28	91 U	91	28	93 U	93	29

TABLE M-3
MONITORING WELL BORINGS SOIL ANALYTICAL RESULTS
BOEING ISAACSON-THOMPSON
REMEDIAL INVESTIGATION

	Preliminary Cleanup Level	IT-MW-16(12-13.5) TW45O 11/10/2011			IT-MW-17(2-3.5) TW45A 11/10/2011			IT-MW-17(5-6.5) TW45B 11/10/2011			IT-MW-17(8-9.5) TW45C 11/10/2011			IT-MW-17(11-12.5) TW45D 11/10/2011		
		Result	Reporting Limit	Detection Limit	Result	Reporting Limit	Detection Limit	Result	Reporting Limit	Detection Limit	Result	Reporting Limit	Detection Limit	Result	Reporting Limit	Detection Limit
2,4-Dinitrotoluene	---	94 U	94	18	90 U	90	18	90 U	90	18	91 U	91	18	93 U	93	18
Diethylphthalate	178,000	47 U	47	34	45 U	45	33	45 U	45	33	45 U	45	33	47 U	47	34
4-Chlorophenyl-phenylether	---	19 U	19	5.0	18 U	18	4.8	18 U	18	4.8	18 U	18	4.8	19 U	19	4.9
Fluorene	150,000	19 U	19	4.1	**9.0** J1	18	3.9	18 U	18	3.9	18 U	18	4.0	19 U	19	4.1
4-Nitroaniline	---	94 U	94	36	90 U	90	34	90 U	90	34	91 U	91	34	93 U	93	35
4,6-Dinitro-2-Methylphenol	---	190 U	190	20	180 U	180	19	180 U	180	19	180 U	180	19	190 UJ	190	20
N-Nitrosodiphenylamine	204,000	19 U	19	5.1	18 U	18	4.9	18 U	18	4.9	18 U	18	4.9	19 U	19	5.0
4-Bromophenyl-phenylether	---	19 U	19	4.7	18 U	18	4.5	18 U	18	4.5	18 U	18	4.6	19 U	19	4.7
Hexachlorobenzene	---	19 U	19	4.0	18 U	18	3.9	18 U	18	3.9	18 U	18	3.9	19 U	19	4.0
Pentachlorophenol	---	190 U	190	45	180 U	180	44	180 U	180	44	180 U	180	44	190 UJ	190	45
Phenanthrene	---	19 U	19	3.4	**190**	18	3.3	**54**	18	3.3	18 U	18	3.3	**120**	19	3.4
Carbazole	50,000	19 U	19	2.5	**24**	18	2.4	18 U	18	2.4	18 U	18	2.4	**10** J1	19	2.5
Anthracene	1,600,000	19 U	19	4.2	**35**	18	4.1	18 U	18	4.1	18 U	18	4.1	19 U	19	4.2
Di-n-Butylphthalate	26,000	19 U	19	7.6	**20**	18	7.4	18 U	18	7.3	18 U	18	7.4	19 U	19	7.6
Fluoranthene	230,000	19 U	19	2.7	**260**	18	2.6	**59**	18	2.6	18 U	18	2.6	**66**	19	2.7
Pyrene	240,000	19 U	19	1.8	**320**	18	1.8	**100**	18	1.7	**15** J1	18	1.8	**68**	19	1.8
Butylbenzylphthalate	1,700	19 U	19	5.8	18 U	18	5.6	18 U	18	5.5	18 U	18	5.6	19 U	19	5.7
3,3'-Dichlorobenzidine	---	140 UJ	140	17	140 UJ	140	16	140 UJ	140	16	140 UJ	140	16	140 UJ	140	17
Benzo(a)anthracene	---	19 U	19	3.1	**140**	18	3.0	**57**	18	3.0	18 U	18	3.0	**35**	19	3.1
bis(2-Ethylhexyl)phthalate	56,600	43 U	23	14	62 U	23	13	55 U	22	13	33 U	23	13	23 U	23	14
Chrysene	---	19 U	19	3.5	**220**	18	3.4	**130**	18	3.4	**10** J1	18	3.4	**48**	19	3.5
Di-n-Octyl phthalate	---	19 U	19	5.5	18 U	18	5.3	18 U	18	5.3	18 U	18	5.3	19 U	19	5.4
Benzo(a)pyrene	---	19 U	19	5.1	**160**	18	4.9	**51**	18	4.9	18 U	18	5.0	**31**	19	5.1
Indeno(1,2,3-cd)pyrene	---	19 U	19	4.4	**70**	18	4.2	**31**	18	4.2	18 U	18	4.3	**20**	19	4.4
Dibenz(a,h)anthracene	---	19 U	19	4.0	**32**	18	3.9	**11** J1	18	3.9	18 U	18	3.9	19 U	19	4.0
Benzo(g,h,i)perylene	---	19 U	19	4.1	**88**	18	4.0	**34**	18	4.0	18 U	18	4.0	**22**	19	4.1
1-Methylnaphthalene	16,000	19 U	19	2.5	**17** J1	18	2.4	**9.9** J1	18	2.4	18 U	18	2.4	**22**	19	2.5
Total Benzofluoranthenes	---	19 U	19	2.6	**270**	18	2.5	**94**	18	2.5	18 U	18	2.5	**58**	19	2.6
cPAH TEQ	15	ND	NA	NA	**213**	NA	NA	**72** J	NA	NA	**0.10**	NA	NA	**43**	NA	NA
PAHs (µg/kg)																
Method SW8270D-SIM																
Naphthalene	2,100	**2.7** J1	4.8	2.5	**31**	8.8	4.7	**18**	4.5	2.4	**3.4** J1	4.7	2.5	**100**	4.8	2.5
2-Methylnaphthalene	320,000	4.8 U	4.8	1.5	**39**	8.8	2.7	**19**	4.5	1.4	**2.6** J1	4.7	1.4	**160**	4.8	1.5
1-Methylnaphthalene	16,000	4.8 U	4.8	1.6	**26**	8.8	3.0	**13**	4.5	1.5	4.7 U	4.7	1.6	**73**	4.8	1.7
Total Naphthalenes	---	**2.7** J1	NA	NA	**96**	NA	NA	**50**	NA	NA	**6** J1	NA	NA	**333**	NA	NA
Acenaphthylene	---	4.8 U	4.8	1.2	**8.6** J1	8.8	2.2	**2.6** J1	4.5	1.1	4.7 U	4.7	1.2	**8.5**	4.8	1.2
Acenaphthene	230,000	4.8 U	4.8	1.3	8.8 U	8.8	2.3	4.5 U	4.5	1.2	4.7 U	4.7	1.2	4.8 U	4.8	1.3
Fluorene	150,000	4.8 U	4.8	1.2	**12**	8.8	2.3	4.5 U	4.5	1.2	4.7 U	4.7	1.2	**3.3** J1	4.8	1.2
Phenanthrene	---	**3.5** J1	4.8	1.9	**190**	8.8	3.5	**49**	4.5	1.8	**8.1**	4.7	1.9	**200**	4.8	1.9
Anthracene	1,600,000	4.8 U	4.8	1.4	**39**	8.8	2.6	**5.7**	4.5	1.3	4.7 U	4.7	1.4	**14**	4.8	1.4
Fluoranthene	230,000	**3.0** J1	4.8	1.7	**310**	8.8	3.1	**78**	4.5	1.6	**17**	4.7	1.7	**130**	4.8	1.7
Pyrene	240,000	**3.4** J1	4.8	2.1	**350**	8.8	3.9	**100**	4.5	2.0	**18**	4.7	2.1	**98**	4.8	2.1
Benzo(a)anthracene	---	4.8 U	4.8	1.5	**160**	8.8	2.8	**52**	4.5	1.4	**9.0**	4.7	1.5	**57**	4.8	1.5
Chrysene	---	4.8 U	4.8	1.8	**240**	8.8	3.3	**110**	4.5	1.7	**12**	4.7	1.8	**68**	4.8	1.8
Benzo(a)pyrene	---	**3.4** J1	4.8	1.7	**210**	8.8	3.1	**64**	4.5	1.6	**12**	4.7	1.7	**63**	4.8	1.7
Indeno(1,2,3-cd)pyrene	---	4.8 U	4.8	3.3	**120**	8.8	6.1	**27**	4.5	3.1	**6.4**	4.7	3.3	**30**	4.8	3.4
Dibenz(a,h)anthracene	---	4.8 U	4.8	2.3	**46**	8.8	4.2	**16**	4.5	2.1	4.7 U	4.7	2.2	**14**	4.8	2.3
Benzo(g,h,i)perylene	---	4.8 U	4.8	2.9	**140**	8.8	5.4	**39**	4.5	2.7	**7.5**	4.7	2.9	**39**	4.8	2.9
Dibenzofuran	80,000	4.8 U	4.8	1.5	**17**	8.8	2.7	**5.0**	4.5	1.4	4.7 U	4.7	1.4	**21**	4.8	1.5
Total Benzofluoranthenes	---	4.8 U	4.8	1.8	**320**	8.8	3.3	**86**	4.5	1.7	**19**	4.7	1.7	**100**	4.8	1.8
cPAH TEQ	15	**3.4** J	NA	NA	**277**	NA	NA	**83**	NA	NA	**16**	NA	NA	**84**	NA	NA

TABLE M-3
MONITORING WELL BORINGS SOIL ANALYTICAL RESULTS
BOEING ISAACSON-THOMPSON
REMEDIAL INVESTIGATION

	Preliminary Cleanup Level	IT-MW-16(12-13.5) TW45O 11/10/2011			IT-MW-17(2-3.5) TW45A 11/10/2011			IT-MW-17(5-6.5) TW45B 11/10/2011			IT-MW-17(8-9.5) TW45C 11/10/2011			IT-MW-17(11-12.5) TW45D 11/10/2011		
		Result	Reporting Limit	Detection Limit	Result	Reporting Limit	Detection Limit	Result	Reporting Limit	Detection Limit	Result	Reporting Limit	Detection Limit	Result	Reporting Limit	Detection Limit
PCBs (µg/kg)																
Method SW8082																
Aroclor 1016	0.72	30 U	30	1.8	32 U	32	9.6	30 U	30	9.3	30 U	30	9.3	31 U	31	9.6
Aroclor 1242	0.72	30 U	30	2.2	32 U	32	12	30 U	30	11	30 U	30	11	31 U	31	12
Aroclor 1248	220	30 U	30	2.2	32 U	32	12	91 U	91	11	91 U	91	11	31 U	31	12
Aroclor 1254	0.29	30 U	30	2.2	**85**	32	12	**260**	30	11	**320**	30	11	**66**	31	12
Aroclor 1260	5.4	30 U	30	2.2	**77**	32	12	**250**	30	11	**240**	30	11	**33**	31	12
Aroclor 1221	---	30 U	30	2.2	32 U	32	12	30 U	30	11	30 U	30	11	31 U	31	12
Aroclor 1232	---	30 U	30	2.2	32 U	32	12	30 U	30	11	30 U	30	11	31 U	31	12
Total PCBs	1.8	ND	NA	NA	**162**	NA	NA	**510**	NA	NA	**560**	NA	NA	**99**	NA	NA
TOTAL PETROLEUM HYDROCARBONS (mg/kg)																
NWTPH-Dx																
Diesel-Range Organics	2,000	6.1 U	6.1	1.6	**160**	5.5	1.4	**23**	5.5	1.4	5.2 U	5.2	1.3	**51** J	6.4	1.6
Motor Oil-Range Organics	2,000	12 U	12	1.9	**380**	11	1.7	**72**	11	1.7	10 U	10	1.6	**77** J	13	2.0
NWTPH-G																
Gasoline-Range Organics	100/30	7.9 U	7.9	3.8	7.0 U	7.0	3.3	9.2 U	9.2	4.4	6.1 U	6.1	2.9	10 U	10	4.8
TOTAL METALS (mg/kg)																
Methods 200.8/7471A/SW7196A																
Antimony	5	0.2 UJ	0.2	0.016	**0.3**	0.2	0.014	**0.3**	0.2	0.014	0.2 U	0.2	0.013	**3.9**	0.3	0.017
Arsenic	7	**3.3**	0.2	0.11	**10.5**	0.2	0.096	**29.3**	0.2	0.096	**31.5**	0.2	0.09	**13.9**	0.3	0.11
Barium	640	**27.6**	0.6	0.069	**165**	0.6	0.062	**71.1**	0.6	0.062	**37.6**	0.5	0.058	**83.6**	0.7	0.073
Beryllium	160	0.2 U	0.2	0.022	**0.3**	0.2	0.020	**0.2**	0.2	0.020	0.2 U	0.2	0.019	0.3 U	0.3	0.024
Cadmium	1.3	0.1 U	0.1	0.015	**3.0**	0.1	0.013	**6.2**	0.1	0.013	**0.1**	0.1	0.012	**28.1**	0.1	0.016
Chromium	1,480	**9.6**	0.6	0.047	**138**	0.6	0.042	**108**	0.6	0.042	**31.2**	0.5	0.039	**247**	0.7	0.050
Chromium VI	3.8	0.482 U	0.482	0.030	0.429 U	0.429	0.030	0.459 U	0.459	0.030	0.424 U	0.424	0.030	**1.79**	0.527	0.030
Copper	36	**11.9**	0.6	0.044	**82.6**	0.6	0.040	**318**	0.6	0.040	**41.8**	0.5	0.037	**279**	0.7	0.047
Lead	250	**1.4**	0.1	0.058	**210**	0.1	0.052	**467**	0.1	0.52	**9.3**	0.1	0.049	**2160**	1	0.61
Mercury	1.5	0.03 U	0.03	0.0014	**0.37**	0.02	0.0011	**0.06**	0.02	0.0011	**0.03**	0.02	0.0012	**0.10**	0.03	0.0015
Nickel	210	**8.2**	0.6	0.060	**46.0**	0.6	0.054	**330**	0.6	0.054	**37.5**	0.5	0.051	**164**	0.7	0.064
Selenium	1.0	0.6 U	0.6	0.12	0.6 U	0.6	0.11	0.6 U	0.6	0.11	0.5 U	0.5	0.10	0.7 U	0.7	0.13
Silver	170	0.2 U	0.2	0.0098	**0.3**	0.2	0.0089	**0.7**	0.2	0.0089	0.2 U	0.2	0.0083	**1.7**	0.3	0.010
Thallium	0.67	0.2 U	0.2	0.0037	0.2 U	0.2	0.0033	0.2 U	0.2	0.0033	0.2 U	0.2	0.0031	0.3 U	0.3	0.0039
Zinc	1,400	**45**	5	0.42	**470**	10	0.94	**1220**	40	3.8	**78**	4	0.35	**5780**	130	11

TABLE M-3
MONITORING WELL BORINGS SOIL ANALYTICAL RESULTS
BOEING ISAACSON-THOMPSON
REMEDIAL INVESTIGATION

	Preliminary Cleanup Level	IT-MW-17(14-15.5) TW45E 11/10/2011			IT-MW-17(15.5-17) TW45F 11/10/2011			IT-MW-17(18.5-19.75) TW45G 11/10/2011			IT-MW-17(21.25-21.5) TW45H 11/10/2011			IT-MW-17(21.5-23) TW45I 11/10/2011		
		Result	Reporting Limit	Detection Limit	Result	Reporting Limit	Detection Limit	Result	Reporting Limit	Detection Limit	Result	Reporting Limit	Detection Limit	Result	Reporting Limit	Detection Limit
VOLATILES (µg/kg)																
Method SW8260C																
Chloromethane	1,600	1.3 UJ	1.3	0.35	3.7 UJ	3.7	0.97	1.9 UJ	1.9	0.50	1.2 UJ	1.2	0.32	1.2 UJ	1.2	0.31
Bromomethane	---	1.3 UJ	1.3	0.25	3.7 UJ	3.7	0.69	1.9 UJ	1.9	0.36	1.2 UJ	1.2	0.22	1.2 UJ	1.2	0.22
Vinyl Chloride	7.4	1.3 U	1.3	0.31	3.7 U	3.7	0.86	1.9 U	1.9	0.45	1.2 U	1.2	0.28	1.2 U	1.2	0.28
Chloroethane	280,000	1.3 UJ	1.3	0.62	3.7 UJ	3.7	1.7	1.9 UJ	1.9	0.88	1.2 UJ	1.2	0.56	1.2 UJ	1.2	0.54
Methylene Chloride	2400	**2.0** J1	2.7	0.85	**5.5** J1	7.4	2.3	3.8 U	3.8	1.2	**2.5**	2.4	0.76	**5.0**	2.3	0.74
Acetone	510,000	**81**	6.7	0.64	**250**	18	1.8	**17**	9.5	0.92	**17**	6.0	0.58	**11**	5.9	0.56
Carbon Disulfide	75,000	**13**	1.3	0.75	**86**	3.7	2.1	**2.7**	1.9	1.1	**1.6**	1.2	0.67	**3.4**	1.2	0.65
1,1-Dichloroethene	81	1.3 U	1.3	0.45	3.7 U	3.7	1.2	1.9 U	1.9	0.64	1.2 U	1.2	0.40	1.2 U	1.2	0.39
1,1-Dichloroethane	710	1.3 U	1.3	0.27	3.7 U	3.7	0.75	1.9 U	1.9	0.39	1.2 U	1.2	0.24	1.2 U	1.2	0.24
trans-1,2-Dichloroethene	19,000	1.3 U	1.3	0.35	3.7 U	3.7	0.98	1.9 U	1.9	0.51	1.2 U	1.2	0.32	1.2 U	1.2	0.31
cis-1,2-Dichloroethene	2,600	1.3 U	1.3	0.32	3.7 U	3.7	0.88	1.9 U	1.9	0.46	1.2 U	1.2	0.29	1.2 U	1.2	0.28
Chloroform	200	1.3 U	1.3	0.31	3.7 U	3.7	0.86	1.9 U	1.9	0.45	1.2 U	1.2	0.28	1.2 U	1.2	0.27
1,2-Dichloroethane	70	1.3 U	1.3	0.25	3.7 U	3.7	0.70	1.9 U	1.9	0.36	1.2 U	1.2	0.23	1.2 U	1.2	0.22
2-Butanone	430,000	**10**	6.7	0.68	**50**	18	1.9	9.5 U	9.5	0.98	6.0 U	6.0	0.62	5.9 U	5.9	0.60
1,1,1-Trichloroethane	1,900,000	1.3 U	1.3	0.30	3.7 U	3.7	0.83	1.9 U	1.9	0.43	1.2 U	1.2	0.27	1.2 U	1.2	0.26
Carbon Tetrachloride	21	1.3 U	1.3	0.28	3.7 U	3.7	0.78	1.9 U	1.9	0.41	1.2 U	1.2	0.26	1.2 U	1.2	0.25
Vinyl Acetate	---	6.7 U	6.7	0.51	18 U	18	1.4	9.5 U	9.5	0.73	6.0 U	6.0	0.46	5.9 U	5.9	0.45
Bromodichloromethane	89	1.3 U	1.3	0.34	3.7 U	3.7	0.93	1.9 U	1.9	0.48	1.2 U	1.2	0.31	1.2 U	1.2	0.30
1,2-Dichloropropane	92	1.3 U	1.3	0.22	3.7 U	3.7	0.60	1.9 U	1.9	0.31	1.2 U	1.2	0.19	1.2 U	1.2	0.19
cis-1,3-Dichloropropene	---	1.3 U	1.3	0.30	3.7 U	3.7	0.83	1.9 U	1.9	0.43	1.2 U	1.2	0.27	1.2 U	1.2	0.26
Trichloroethene	51	1.3 U	1.3	0.28	3.7 U	3.7	0.78	1.9 U	1.9	0.40	1.2 U	1.2	0.25	1.2 U	1.2	0.25
Dibromochloromethane	---	1.3 U	1.3	0.35	3.7 U	3.7	0.98	1.9 U	1.9	0.51	1.2 U	1.2	0.32	1.2 U	1.2	0.31
1,1,2-Trichloroethane	73	1.3 U	1.3	0.38	3.7 U	3.7	1.1	1.9 U	1.9	0.55	1.2 U	1.2	0.34	1.2 U	1.2	0.33
Benzene	93	**1.4**	1.3	0.39	**4.7**	3.7	1.1	1.9 U	1.9	0.56	1.2 U	1.2	0.36	1.2 U	1.2	0.35
trans-1,3-Dichloropropene	---	1.3 U	1.3	0.29	3.7 U	3.7	0.79	1.9 U	1.9	0.41	1.2 U	1.2	0.26	1.2 U	1.2	0.25
2-Chloroethylvinylether	---	6.7 U	6.7	0.37	18 U	18	1.0	9.5 U	9.5	0.53	6.0 U	6.0	0.33	5.9 U	5.9	0.32
Bromoform	---	1.3 U	1.3	0.40	3.7 U	3.7	1.1	1.9 U	1.9	0.57	1.2 U	1.2	0.36	1.2 U	1.2	0.35
4-Methyl-2-Pentanone (MIBK)	170,000	6.7 U	6.7	0.56	18 U	18	1.5	9.5 U	9.5	0.80	6.0 U	6.0	0.50	5.9 U	5.9	0.49
2-Hexanone	32,000	6.7 U	6.7	0.59	18 U	18	1.6	9.5 U	9.5	0.84	6.0 U	6.0	0.53	5.9 U	5.9	0.51
Tetrachloroethene	260	1.3 U	1.3	0.34	3.7 U	3.7	0.94	1.9 U	1.9	0.49	1.2 U	1.2	0.31	1.2 U	1.2	0.30
1,1,2,2-Tetrachloroethane	13	1.3 U	1.3	0.34	3.7 U	3.7	0.93	1.9 U	1.9	0.48	1.2 U	1.2	0.30	1.2 U	1.2	0.30
Toluene	100,000	**1.2** J1	1.3	0.20	**4.0**	3.7	0.56	1.9 U	1.9	0.29	1.2 U	1.2	0.18	1.2 U	1.2	0.18
Chlorobenzene	26,000	1.3 U	1.3	0.29	3.7 U	3.7	0.81	1.9 U	1.9	0.42	1.2 U	1.2	0.26	1.2 U	1.2	0.26
Ethylbenzene	230	1.3 U	1.3	0.27	3.7 U	3.7	0.74	1.9 U	1.9	0.39	1.2 U	1.2	0.24	1.2 U	1.2	0.24
Styrene	16,000,000	1.3 U	1.3	0.18	3.7 U	3.7	0.51	1.9 U	1.9	0.26	1.2 U	1.2	0.17	1.2 U	1.2	0.16
Trichlorofluoromethane	200,000	1.3 U	1.3	0.35	3.7 U	3.7	0.98	1.9 U	1.9	0.51	1.2 U	1.2	0.32	1.2 U	1.2	0.31
1,1,2-Trichloro-1,2,2-trifuoroethane	1,000,000,000	2.7 U	2.7	0.38	7.4 U	7.4	1.1	3.8 U	3.8	0.55	2.4 U	2.4	0.34	2.3 U	2.3	0.34
m,p-Xylene	160,000	1.3 U	1.3	0.52	3.7 U	3.7	1.4	1.9 U	1.9	0.75	1.2 U	1.2	0.47	1.2 U	1.2	0.46
o-Xylene	200,000	1.3 U	1.3	0.30	3.7 U	3.7	0.82	1.9 U	1.9	0.43	1.2 U	1.2	0.27	1.2 U	1.2	0.26
1,2-Dichlorobenzene	68,000	1.3 U	1.3	0.39	3.7 U	3.7	1.1	1.9 U	1.9	0.56	1.2 U	1.2	0.35	1.2 U	1.2	0.34
1,3-Dichlorobenzene	3,840	1.3 U	1.3	0.30	3.7 U	3.7	0.83	1.9 U	1.9	0.43	1.2 U	1.2	0.27	1.2 U	1.2	0.27
1,4-Dichlorobenzene	3,500	1.3 U	1.3	0.31	3.7 U	3.7	0.85	1.9 U	1.9	0.44	1.2 U	1.2	0.28	1.2 U	1.2	0.27
Acrolein	---	67 U	67	5.1	180 U	180	14	95 U	95	7.3	60 U	60	4.6	59 U	59	4.5
Methyl Iodide	---	1.3 U	1.3	0.29	3.7 U	3.7	0.79	1.9 U	1.9	0.41	1.2 U	1.2	0.26	1.2 U	1.2	0.25
Bromoethane	---	2.7 U	2.7	0.59	7.4 U	7.4	1.6	3.8 U	3.8	0.84	2.4 U	2.4	0.53	2.3 U	2.3	0.52
Acrylonitrile	---	6.7 U	6.7	1.4	18 U	18	3.8	9.5 U	9.5	2.0	6.0 U	6.0	1.2	5.9 U	5.9	1.2
1,1-Dichloropropene	---	1.3 U	1.3	0.42	3.7 U	3.7	1.1	1.9 U	1.9	0.60	1.2 U	1.2	0.38	1.2 U	1.2	0.37
Dibromomethane	---	1.3 U	1.3	0.20	3.7 U	3.7	0.54	1.9 U	1.9	0.28	1.2 U	1.2	0.18	1.2 U	1.2	0.17
1,1,1,2-Tetrachloroethane	---	1.3 U	1.3	0.31	3.7 U	3.7	0.86	1.9 U	1.9	0.44	1.2 U	1.2	0.28	1.2 U	1.2	0.27
1,2-Dibromo-3-chloropropane	---	6.7 U	6.7	0.78	18 U	18	2.2	9.5 U	9.5	1.1	6.0 U	6.0	0.70	5.9 U	5.9	0.69
1,2,3-Trichloropropane	---	2.7 U	2.7	0.69	7.4 U	7.4	1.9	3.8 U	3.8	0.99	2.4 U	2.4	0.62	2.3 U	2.3	0.61
trans-1,4-Dichloro-2-butene	---	6.7 U	6.7	0.58	18 U	18	1.6	9.5 U	9.5	0.83	6.0 U	6.0	0.53	5.9 U	5.9	0.51
1,3,5-Trimethylbenzene	800,000	1.3 U	1.3	0.34	3.7 U	3.7	0.93	1.9 U	1.9	0.48	1.2 U	1.2	0.31	1.2 U	1.2	0.30
1,2,4-Trimethylbenzene	800,000	**1.0** J1	1.3	0.31	3.7 U	3.7	0.85	1.9 U	1.9	0.44	1.2 U	1.2	0.28	1.2 U	1.2	0.27
Hexachlorobutadiene	---	6.7 U	6.7	0.55	18 U	18	1.5	9.5 U	9.5	0.78	6.0 U	6.0	0.49	5.9 U	5.9	0.48

TABLE M-3
MONITORING WELL BORINGS SOIL ANALYTICAL RESULTS
BOEING ISAACSON-THOMPSON
REMEDIAL INVESTIGATION

	Preliminary Cleanup Level	IT-MW-17(14-15.5) TW45E 11/10/2011			IT-MW-17(15.5-17) TW45F 11/10/2011			IT-MW-17(18.5-19.75) TW45G 11/10/2011			IT-MW-17(21.25-21.5) TW45H 11/10/2011			IT-MW-17(21.5-23) TW45I 11/10/2011		
		Result	Reporting Limit	Detection Limit	Result	Reporting Limit	Detection Limit	Result	Reporting Limit	Detection Limit	Result	Reporting Limit	Detection Limit	Result	Reporting Limit	Detection Limit
Ethylene Dibromide	---	1.3 U	1.3	0.23	3.7 U	3.7	0.65	1.9 U	1.9	0.34	1.2 U	1.2	0.21	1.2 U	1.2	0.21
Bromochloromethane	---	1.3 U	1.3	0.43	3.7 U	3.7	1.2	1.9 U	1.9	0.62	1.2 U	1.2	0.39	1.2 U	1.2	0.38
2,2-Dichloropropane	---	1.3 U	1.3	0.39	3.7 U	3.7	1.1	1.9 U	1.9	0.56	1.2 U	1.2	0.35	1.2 U	1.2	0.34
1,3-Dichloropropane	---	1.3 U	1.3	0.28	3.7 U	3.7	0.77	1.9 U	1.9	0.40	1.2 U	1.2	0.25	1.2 U	1.2	0.24
Isopropylbenzene	78,000	1.3 U	1.3	0.31	3.7 U	3.7	0.86	1.9 U	1.9	0.44	1.2 U	1.2	0.28	1.2 U	1.2	0.27
n-Propylbenzene	11,000	1.3 U	1.3	0.36	3.7 U	3.7	1.0	1.9 U	1.9	0.52	1.2 U	1.2	0.33	1.2 U	1.2	0.32
Bromobenzene	---	1.3 U	1.3	0.20	3.7 U	3.7	0.56	1.9 U	1.9	0.29	1.2 U	1.2	0.18	1.2 U	1.2	0.18
2-Chlorotoluene	---	1.3 U	1.3	0.40	3.7 U	3.7	1.1	1.9 U	1.9	0.57	1.2 U	1.2	0.36	1.2 U	1.2	0.35
4-Chlorotoluene	400,000	1.3 U	1.3	0.37	3.7 U	3.7	1.0	1.9 U	1.9	0.53	1.2 U	1.2	0.33	1.2 U	1.2	0.32
tert-Butylbenzene	---	1.3 U	1.3	0.41	3.7 U	3.7	1.1	1.9 U	1.9	0.58	1.2 U	1.2	0.37	1.2 U	1.2	0.36
sec-Butylbenzene	---	**0.9** J1	1.3	0.32	**2.7** J1	3.7	0.88	1.9 U	1.9	0.46	1.2 U	1.2	0.29	1.2 U	1.2	0.28
4-Isopropyltoluene	---	**0.7** J1	1.3	0.31	**2.0** J1	3.7	0.87	1.9 U	1.9	0.45	1.2 U	1.2	0.28	1.2 U	1.2	0.28
n-Butylbenzene	27,000	1.3 U	1.3	0.35	3.7 U	3.7	0.96	1.9 U	1.9	0.50	1.2 U	1.2	0.31	1.2 U	1.2	0.31
1,2,4-Trichlorobenzene	80	6.7 U	6.7	0.44	18 U	18	1.2	9.5 U	9.5	0.63	6.0 U	6.0	0.40	5.9 U	5.9	0.39
Naphthalene	2,100	**2.6** J1	6.7	0.57	**6.0** J1	18	1.6	9.5 U	9.5	0.82	6.0 U	6.0	0.52	5.9 U	5.9	0.50
1,2,3-Trichlorobenzene	---	6.7 U	6.7	0.41	18 U	18	1.1	9.5 U	9.5	0.58	6.0 U	6.0	0.37	5.9 U	5.9	0.36
SEMIVOLATILES (µg/kg)																
Method SW8270D																
Phenol	1,900,000	**33**	18	7.7	**330**	19	8.2	**80**	19	8.3	18 U	18	8.0	**9.8** J1	18	7.7
Bis-(2-Chloroethyl) Ether	---	18 U	18	3.0	19 U	19	3.2	19 U	19	3.2	18 U	18	3.1	18 U	18	3.0
2-Chlorophenol	---	18 U	18	2.1	19 U	19	2.3	19 U	19	2.3	18 U	18	2.2	18 U	18	2.1
1,3-Dichlorobenzene	3,840	18 U	18	2.4	19 U	19	2.5	19 U	19	2.5	18 U	18	2.4	18 U	18	2.3
1,4-Dichlorobenzene	3,500	18 U	18	2.6	19 U	19	2.7	19 U	19	2.7	18 U	18	2.6	18 U	18	2.5
Benzyl Alcohol	8,000,000	18 U	18	5.5	**32**	19	5.8	19 U	19	5.8	18 U	18	5.6	**30**	18	5.4
1,2-Dichlorobenzene	68,000	18 U	18	2.2	19 U	19	2.4	19 U	19	2.4	18 U	18	2.3	18 U	18	2.2
2-Methylphenol	250,000	18 U	18	4.7	**15** J1	19	5.0	**50**	19	5.0	18 U	18	4.9	18 U	18	4.7
2,2'-Oxybis(1-Chloropropane)	---	18 U	18	3.4	19 U	19	3.6	19 U	19	3.6	18 U	18	3.5	18 U	18	3.3
4-Methylphenol	41,000	**27** J1	36	5.9	**840**	38	6.3	**180**	38	6.3	37 U	37	6.1	36 U	36	5.9
N-Nitroso-Di-N-Propylamine	---	18 U	18	3.0	19 U	19	3.2	19 U	19	3.2	18 U	18	3.1	18 U	18	3.0
Hexachloroethane	---	18 U	18	2.6	19 U	19	2.8	19 U	19	2.8	18 U	18	2.7	18 U	18	2.6
Nitrobenzene	---	18 U	18	3.6	19 U	19	3.9	19 U	19	3.9	18 U	18	3.8	18 U	18	3.6
Isophorone	---	18 U	18	2.6	19 U	19	2.7	19 U	19	2.7	18 U	18	2.6	18 U	18	2.5
2-Nitrophenol	---	90 U	90	35	95 U	95	37	96 U	96	37	92 U	92	36	89 U	89	34
2,4-Dimethylphenol	95,000	36 U	36	3.1	38 U	38	3.3	**62**	38	3.3	37 U	37	3.2	36 U	36	3.1
Benzoic Acid	9,000	360 U	360	90	**120** J1	380	96	380 U	380	97	370 U	370	93	360 U	360	90
bis(2-Chloroethoxy) Methane	---	18 U	18	1.8	19 U	19	1.9	19 U	19	1.9	18 U	18	1.9	18 U	18	1.8
2,4-Dichlorophenol	---	180 U	180	19	190 U	190	20	190 U	190	21	180 U	180	20	180 U	180	19
1,2,4-Trichlorobenzene	80	18 U	18	3.1	19 U	19	3.3	19 U	19	3.3	18 U	18	3.2	18 U	18	3.1
Naphthalene	2,100	**140**	18	2.5	**280**	19	2.6	**84**	19	2.6	18 U	18	2.6	18 U	18	2.5
4-Chloroaniline	---	240 U	240	20	260 U	260	21	260 U	260	21	250 U	250	21	240 U	240	20
Hexachlorobutadiene	---	90 U	90	4.1	95 U	95	4.3	96 U	96	4.4	92 U	92	4.2	89 U	89	4.1
4-Chloro-3-methylphenol	740,000	90 U	90	14	95 U	95	14	96 U	96	14	92 U	92	14	89 U	89	13
2-Methylnaphthalene	320,000	**110**	18	2.7	**140**	19	2.9	**45**	19	2.9	18 U	18	2.8	18 U	18	2.7
Hexachlorocyclopentadiene	---	360 U	360	59	380 U	380	63	380 U	380	64	370 U	370	61	360 U	360	59
2,4,6-Trichlorophenol	---	90 U	90	20	95 U	95	21	96 U	96	21	92 U	92	21	89 U	89	20
2,4,5-Trichlorophenol	---	90 U	90	19	95 U	95	20	96 U	96	20	92 U	92	20	89 U	89	19
2-Chloronaphthalene	---	18 U	18	2.4	19 U	19	2.5	19 U	19	2.5	18 U	18	2.4	18 U	18	2.3
2-Nitroaniline	---	90 U	90	16	95 U	95	17	96 U	96	18	92 U	92	17	89 U	89	16
Dimethylphthalate	71	18 U	18	2.6	19 U	19	2.8	19 U	19	2.8	18 U	18	2.7	18 U	18	2.6
Acenaphthylene	---	18 U	18	5.1	19 U	19	5.4	**12** J1	19	5.5	18 U	18	5.3	18 U	18	5.1
3-Nitroaniline	---	90 U	90	20	95 U	95	21	96 U	96	22	92 U	92	21	89 U	89	20
Acenaphthene	230,000	**18**	18	2.9	**44**	19	3.1	**25**	19	3.1	18 U	18	3.0	18 U	18	2.9
2,4-Dinitrophenol	---	760 U	760	99	810 U	810	110	810 U	810	110	790 U	790	100	760 U	760	99
4-Nitrophenol	---	90 U	90	31	95 U	95	33	96 U	96	33	92 U	92	32	89 U	89	31
Dibenzofuran	80,000	18 U	18	3.7	**59**	19	3.9	**59**	19	3.9	18 U	18	3.8	18 U	18	3.6
2,6-Dinitrotoluene	---	90 U	90	27	95 U	95	29	96 U	96	29	92 U	92	28	89 U	89	27

TABLE M-3
MONITORING WELL BORINGS SOIL ANALYTICAL RESULTS
BOEING ISAACSON-THOMPSON
REMEDIAL INVESTIGATION

	Preliminary Cleanup Level	IT-MW-17(14-15.5) TW45E 11/10/2011			IT-MW-17(15.5-17) TW45F 11/10/2011			IT-MW-17(18.5-19.75) TW45G 11/10/2011			IT-MW-17(21.25-21.5) TW45H 11/10/2011			IT-MW-17(21.5-23) TW45I 11/10/2011		
		Result	Reporting Limit	Detection Limit	Result	Reporting Limit	Detection Limit	Result	Reporting Limit	Detection Limit	Result	Reporting Limit	Detection Limit	Result	Reporting Limit	Detection Limit
2,4-Dinitrotoluene	---	90 U	90	17	95 U	95	19	96 U	96	19	92 U	92	18	89 U	89	17
Diethylphthalate	178,000	45 U	45	33	48 U	48	35	48 U	48	35	46 U	46	34	44 U	44	33
4-Chlorophenyl-phenylether	---	18 U	18	4.7	19 U	19	5.0	19 U	19	5.1	18 U	18	4.9	18 U	18	4.7
Fluorene	150,000	**18**	18	3.9	**55**	19	4.1	**49**	19	4.2	18 U	18	4.0	18 U	18	3.9
4-Nitroaniline	---	90 U	90	34	95 U	95	36	96 U	96	36	92 U	92	35	89 U	89	34
4,6-Dinitro-2-Methylphenol	---	180 U	180	19	190 U	190	20	190 U	190	20	180 U	180	20	180 U	180	19
N-Nitrosodiphenylamine	204,000	**48**	18	4.8	**130**	19	5.1	19 U	19	5.2	18 U	18	5.0	18 U	18	4.8
4-Bromophenyl-phenylether	---	18 U	18	4.5	19 U	19	4.8	19 U	19	4.8	18 U	18	4.7	18 U	18	4.5
Hexachlorobenzene	---	18 U	18	3.8	19 U	19	4.1	19 U	19	4.1	18 U	18	4.0	18 U	18	3.8
Pentachlorophenol	---	180 U	180	43	190 U	190	46	190 U	190	46	180 U	180	45	180 U	180	43
Phenanthrene	---	**360**	18	3.3	**290**	19	3.5	**170**	19	3.5	18 U	18	3.4	18 U	18	3.2
Carbazole	50,000	18 U	18	2.4	19 U	19	2.6	19 U	19	2.6	18 U	18	2.5	18 U	18	2.4
Anthracene	1,600,000	**29**	18	4.0	**82**	19	4.3	**41**	19	4.3	18 U	18	4.2	18 U	18	4.0
Di-n-Butylphthalate	26,000	18 U	18	7.3	**2200**	95	39	19 U	19	7.8	**20**	18	7.5	18 U	18	7.3
Fluoranthene	230,000	**600**	18	2.6	**270**	19	2.8	**70**	19	2.8	18 U	18	2.7	18 U	18	2.6
Pyrene	240,000	**910**	18	1.7	**510**	19	1.8	**73**	19	1.9	18 U	18	1.8	**11** J1	18	1.7
Butylbenzylphthalate	1,700	18 U	18	5.5	19 U	19	5.8	19 U	19	5.9	18 U	18	5.7	18 U	18	5.5
3,3'-Dichlorobenzidine	---	130 UJ	130	16	140 UJ	140	17	140 UJ	140	17	140 UJ	140	16	130 UJ	130	16
Benzo(a)anthracene	---	**260**	18	2.9	**140**	19	3.1	**19**	19	3.1	18 U	18	3.0	18 U	18	2.9
bis(2-Ethylhexyl)phthalate	56,600	48 U	22	13	84 U	24	14	35 U	24	14	53 U	23	14	48 U	22	13
Chrysene	---	**490**	18	3.4	**310**	19	3.6	**19**	19	3.6	18 U	18	3.5	18 U	18	3.3
Di-n-Octyl phthalate	---	18 U	18	5.2	19 U	19	5.5	19 U	19	5.6	18 U	18	5.4	18 U	18	5.2
Benzo(a)pyrene	---	**380**	18	4.9	**120**	19	5.2	**13** J1	19	5.2	18 U	18	5.0	18 U	18	4.8
Indeno(1,2,3-cd)pyrene	---	**120**	18	4.2	**28**	19	4.4	19 U	19	4.5	18 U	18	4.3	18 U	18	4.2
Dibenz(a,h)anthracene	---	**31**	18	3.9	19 U	19	4.1	19 U	19	4.1	18 U	18	4.0	18 U	18	3.8
Benzo(g,h,i)perylene	---	**140**	18	3.9	**35**	19	4.2	19 U	19	4.2	18 U	18	4.1	18 U	18	3.9
1-Methylnaphthalene	16,000	**67**	18	2.4	**110**	19	2.5	**34**	19	2.6	18 U	18	2.5	18 U	18	2.4
Total Benzofluoranthenes	---	**560**	18	2.5	**220**	19	2.6	**24**	19	2.6	18 U	18	2.5	18 U	18	2.4
cPAH TEQ	15	**482**	NA	NA	**162**	NA	NA	**17** J	NA	NA	ND	NA	NA	ND	NA	NA
PAHs (µg/kg)																
Method SW8270D-SIM																
Naphthalene	2,100	**120**	11	6.0	**220**	18	9.6	**110**	4.7	2.4	**5.2**	4.5	2.4	**5.4**	4.6	2.4
2-Methylnaphthalene	320,000	**110**	11	3.5	**120**	18	5.5	**52**	4.7	1.4	**3.2** J1	4.5	1.4	**4.4** J1	4.6	1.4
1-Methylnaphthalene	16,000	**82**	11	3.9	**100**	18	6.2	**37**	4.7	1.6	**3.6** J1	4.5	1.5	**4.0** J1	4.6	1.6
Total Naphthalenes	---	**312**	NA	NA	**440**	NA	NA	**199**	NA	NA	**12** J1	NA	NA	**13.8** J1	NA	NA
Acenaphthylene	---	11 U	11	2.9	**32**	18	4.6	**17**	4.7	1.2	4.5 U	4.5	1.1	4.6 U	4.6	1.2
Acenaphthene	230,000	**58**	11	3.0	**93**	18	4.8	**28**	4.7	1.2	**2.5** J1	4.5	1.2	**5.5**	4.6	1.2
Fluorene	150,000	**37**	11	2.9	**85**	18	4.7	**49**	4.7	1.2	**2.5** J1	4.5	1.2	**4.1** J1	4.6	1.2
Phenanthrene	---	**440**	11	4.5	**410**	18	7.2	**170**	4.7	1.8	**11**	4.5	1.8	**56**	4.6	1.8
Anthracene	1,600,000	**56**	11	3.3	**120**	18	5.3	**54**	4.7	1.4	4.5 U	4.5	1.3	**7.5**	4.6	1.3
Fluoranthene	230,000	**450**	11	4.0	**410**	18	6.4	**140**	4.7	1.6	**11**	4.5	1.6	**32**	4.6	1.6
Pyrene	240,000	**600**	11	5.1	**590**	18	8.1	**110**	4.7	2.1	**11**	4.5	2.0	**44**	4.6	2.0
Benzo(a)anthracene	---	**170**	11	3.6	**120**	18	5.8	**19**	4.7	1.5	**3.9** J1	4.5	1.4	**16**	4.6	1.5
Chrysene	---	**280**	11	4.3	**260**	18	6.8	**21**	4.7	1.8	**6.3**	4.5	1.7	**17**	4.6	1.7
Benzo(a)pyrene	---	**240**	11	4.0	**140**	18	6.4	**25**	4.7	1.6	**5.0**	4.5	1.6	**16**	4.6	1.6
Indeno(1,2,3-cd)pyrene	---	**88**	11	7.9	**57**	18	13	**7.7**	4.7	3.2	4.5 U	4.5	3.1	**6.1**	4.6	3.2
Dibenz(a,h)anthracene	---	**38**	11	5.4	**18**	18	8.7	4.7 U	4.7	2.2	4.5 U	4.5	2.2	4.6 U	4.6	2.2
Benzo(g,h,i)perylene	---	**130**	11	6.9	**94**	18	11	**7.9**	4.7	2.8	**3.7** J1	4.5	2.8	**7.3**	4.6	2.8
Dibenzofuran	80,000	**22**	11	3.4	**67**	18	5.5	**80**	4.7	1.4	**3.3** J1	4.5	1.4	**2.9** J1	4.6	1.4
Total Benzofluoranthenes	---	**290**	11	4.2	**180**	18	6.7	**21**	4.7	1.7	**9.2**	4.5	1.7	**21**	4.6	1.7
cPAH TEQ	15	**301**	NA	NA	**180**	NA	NA	**30**	NA	NA	**6.4** J	NA	NA	**20** J	NA	NA

TABLE M-3
MONITORING WELL BORINGS SOIL ANALYTICAL RESULTS
BOEING ISAACSON-THOMPSON
REMEDIAL INVESTIGATION

	Preliminary Cleanup Level	IT-MW-17(14-15.5) TW45E 11/10/2011			IT-MW-17(15.5-17) TW45F 11/10/2011			IT-MW-17(18.5-19.75) TW45G 11/10/2011			IT-MW-17(21.25-21.5) TW45H 11/10/2011			IT-MW-17(21.5-23) TW45I 11/10/2011		
		Result	Reporting Limit	Detection Limit	Result	Reporting Limit	Detection Limit	Result	Reporting Limit	Detection Limit	Result	Reporting Limit	Detection Limit	Result	Reporting Limit	Detection Limit
PCBs (µg/kg)																
Method SW8082																
Aroclor 1016	0.72	30 U	30	9.1	32 U	32	9.8	30 U	30	1.9	32 U	32	1.9	32 U	32	2.0
Aroclor 1242	0.72	30 U	30	11	32 U	32	12	30 U	30	2.3	32 U	32	2.4	32 U	32	2.4
Aroclor 1248	220	110 U	110	11	110 U	110	12	30 U	30	2.3	32 U	32	2.4	32 U	32	2.4
Aroclor 1254	0.29	**230**	30	11	**270**	32	12	30 U	30	2.3	32 U	32	2.4	32 U	32	2.4
Aroclor 1260	5.4	**190**	30	11	**200**	32	12	30 U	30	2.3	32 U	32	2.4	32 U	32	2.4
Aroclor 1221	---	30 U	30	11	32 U	32	12	30 U	30	2.3	32 U	32	2.4	32 U	32	2.4
Aroclor 1232	---	30 U	30	11	32 U	32	12	30 U	30	2.3	32 U	32	2.4	32 U	32	2.4
Total PCBs	1.8	**420**	NA	NA	**470**	NA	NA	ND	NA	NA	ND	NA	NA	ND	NA	NA
TOTAL PETROLEUM HYDROCARBONS (mg/kg)																
NWTPH-Dx																
Diesel-Range Organics	2,000	**240**	6.7	1.7	**900**	90	23	**9.5**	6.8	1.7	6.2 U	6.2	1.6	5.8 U	5.8	1.5
Motor Oil-Range Organics	2,000	**580**	13	2.1	**1800**	180	28	**15**	14	2.1	12 U	12	1.9	12 U	12	1.8
NWTPH-G																
Gasoline-Range Organics	100/30	**9.9**	9.1	4.4	**33**	14	6.8	9.5 U	9.5	4.6	8.2 U	8.2	3.9	6.7 U	6.7	3.2
TOTAL METALS (mg/kg)																
Methods 200.8/7471A/SW7196A																
Antimony	5	**0.6**	0.3	0.019	**0.4**	0.3	0.022	**0.4**	0.3	0.019	0.2 U	0.2	0.016	0.2 U	0.2	0.016
Arsenic	7	**60.3**	0.3	0.12	**299**	0.3	0.15	**76.4**	0.3	0.12	**33.9**	0.2	0.11	**78.5**	0.2	0.11
Barium	640	**645**	7	0.80	**295**	0.9	0.097	**71.0**	0.7	0.080	**57.3**	0.6	0.070	**35.5**	0.6	0.068
Beryllium	160	**0.3**	0.3	0.026	0.3 U	0.3	0.031	0.3 U	0.3	0.026	0.2 U	0.2	0.022	0.2 U	0.2	0.022
Cadmium	1.3	**15.3**	0.1	0.017	**2.5**	0.2	0.021	0.1 U	0.1	0.017	0.1 U	0.1	0.015	**1.1**	0.1	0.015
Chromium	1,480	**238**	0.7	0.054	**58.4**	0.9	0.066	**11.3**	0.7	0.054	**15.1**	0.6	0.047	**25.6**	0.6	0.046
Chromium VI	3.8	0.585 U	0.585	0.030	**8.32**	0.661	0.030	0.564 U	0.564	0.030	**0.587**	0.533	0.030	0.489 U	0.489	0.030
Copper	36	**353**	0.7	0.051	**1070**	9	0.62	**27.3**	0.7	0.051	**18.7**	0.6	0.045	**47.3**	0.6	0.044
Lead	250	**1120**	1	0.67	**338**	0.2	0.081	**16.3**	0.1	0.067	**10.9**	0.1	0.059	**81.0**	0.1	0.057
Mercury	1.5	**0.10**	0.03	0.0014	**0.45**	0.03	0.0018	0.03 U	0.03	0.0016	**0.08**	0.03	0.0014	0.02 U	0.02	0.0012
Nickel	210	**171**	0.7	0.070	**33.7**	0.9	0.085	**10.9**	0.7	0.070	**9.8**	0.6	0.061	**39.4**	0.6	0.059
Selenium	1.0	0.7 U	0.7	0.14	0.9 U	0.9	0.17	0.7 U	0.7	0.14	0.6 U	0.6	0.12	0.6 U	0.6	0.12
Silver	170	**0.8**	0.3	0.011	**0.5**	0.3	0.014	0.3 U	0.3	0.011	0.2 U	0.2	0.010	0.2 U	0.2	0.0097
Thallium	0.67	0.3 U	0.3	0.0043	**1.1**	0.3	0.0052	0.3 U	0.3	0.0043	0.2 U	0.2	0.0037	0.2 U	0.2	0.0036
Zinc	1,400	**9040**	140	12	**1400**	70	5.9	**60**	6	0.48	**38**	5	0.42	**224**	5	0.41

TABLE M-3
MONITORING WELL BORINGS SOIL ANALYTICAL RESULTS
BOEING ISAACSON-THOMPSON
REMEDIAL INVESTIGATION

	Preliminary Cleanup Level	IT-MW-18(2-3.5) TW27A 11/08/2011			IT-MW-18(5-6.5) TW27B 11/08/2011			IT-MW-18(8-9.5) TW27D 11/08/2011			IT-MW-18(11.5-13) TW27C 11/08/2011			IT-MW-19(2-3.5) TW35C 11/09/2011		
		Result	Reporting Limit	Detection Limit	Result	Reporting Limit	Detection Limit	Result	Reporting Limit	Detection Limit	Result	Reporting Limit	Detection Limit	Result	Reporting Limit	Detection Limit
VOLATILES (µg/kg)																
Method SW8260C																
Chloromethane	1,600	1.2 U	1.2	0.33	1.4 U	1.4	0.36	1.4 U	1.4	0.36	1.2 U	1.2	0.32	1.3 U	1.3	0.34
Bromomethane	---	1.2 UJ	1.2	0.23	1.4 UJ	1.4	0.26	1.4 UJ	1.4	0.26	1.2 UJ	1.2	0.23	1.3 UJ	1.3	0.24
Vinyl Chloride	7.4	1.2 U	1.2	0.29	1.4 U	1.4	0.32	1.4 U	1.4	0.32	1.2 U	1.2	0.29	1.3 U	1.3	0.30
Chloroethane	280,000	1.2 U	1.2	0.57	1.4 U	1.4	0.64	1.4 U	1.4	0.63	1.2 U	1.2	0.57	1.3 U	1.3	0.59
Methylene Chloride	2400	**3.0**	2.5	0.79	2.8 U	2.8	0.88	2.7 U	2.7	0.87	2.5 U	2.5	0.78	**4.3**	2.6	0.81
Acetone	510,000	**12** J	6.2	0.60	**22** J	6.9	0.67	**22** J	6.8	0.66	**23** J	6.1	0.59	**27**	6.4	0.62
Carbon Disulfide	75,000	**4.0**	1.2	0.69	**2.0**	1.4	0.77	**2.6**	1.4	0.76	**3.7**	1.2	0.69	1.3 U	1.3	0.71
1,1-Dichloroethene	81	1.2 U	1.2	0.42	1.4 U	1.4	0.46	1.4 U	1.4	0.46	1.2 U	1.2	0.41	1.3 U	1.3	0.43
1,1-Dichloroethane	710	1.2 UJ	1.2	0.25	1.4 UJ	1.4	0.28	1.4 UJ	1.4	0.28	1.2 UJ	1.2	0.25	1.3 U	1.3	0.26
trans-1,2-Dichloroethene	19,000	1.2 U	1.2	0.33	1.4 U	1.4	0.37	1.4 U	1.4	0.36	1.2 U	1.2	0.33	1.3 U	1.3	0.34
cis-1,2-Dichloroethene	2,600	1.2 U	1.2	0.30	1.4 U	1.4	0.33	1.4 U	1.4	0.33	1.2 U	1.2	0.29	1.3 U	1.3	0.31
Chloroform	200	1.2 U	1.2	0.29	1.4 U	1.4	0.32	1.4 U	1.4	0.32	1.2 U	1.2	0.29	1.3 U	1.3	0.30
1,2-Dichloroethane	70	1.2 U	1.2	0.24	1.4 U	1.4	0.26	1.4 U	1.4	0.26	1.2 U	1.2	0.23	1.3 U	1.3	0.24
2-Butanone	430,000	6.2 U	6.2	0.63	6.9 U	6.9	0.71	6.8 U	6.8	0.70	6.1 U	6.1	0.63	6.4 U	6.4	0.66
1,1,1-Trichloroethane	1,900,000	1.2 U	1.2	0.28	1.4 U	1.4	0.31	1.4 U	1.4	0.31	1.2 U	1.2	0.28	1.3 U	1.3	0.29
Carbon Tetrachloride	21	1.2 U	1.2	0.26	1.4 U	1.4	0.29	1.4 U	1.4	0.29	1.2 U	1.2	0.26	1.3 U	1.3	0.27
Vinyl Acetate	---	6.2 U	6.2	0.47	6.9 U	6.9	0.53	6.8 U	6.8	0.52	6.1 U	6.1	0.47	6.4 U	6.4	0.49
Bromodichloromethane	89	1.2 U	1.2	0.31	1.4 U	1.4	0.35	1.4 U	1.4	0.35	1.2 U	1.2	0.31	1.3 U	1.3	0.32
1,2-Dichloropropane	92	1.2 U	1.2	0.20	1.4 U	1.4	0.22	1.4 U	1.4	0.22	1.2 U	1.2	0.20	1.3 U	1.3	0.21
cis-1,3-Dichloropropene	---	1.2 U	1.2	0.28	1.4 U	1.4	0.31	1.4 U	1.4	0.31	1.2 U	1.2	0.28	1.3 U	1.3	0.29
Trichloroethene	51	1.2 U	1.2	0.26	1.4 U	1.4	0.29	1.4 U	1.4	0.29	1.2 U	1.2	0.26	1.3 U	1.3	0.27
Dibromochloromethane	---	1.2 U	1.2	0.33	1.4 U	1.4	0.37	1.4 U	1.4	0.36	1.2 U	1.2	0.33	1.3 U	1.3	0.34
1,1,2-Trichloroethane	73	1.2 U	1.2	0.35	1.4 U	1.4	0.40	1.4 U	1.4	0.39	1.2 U	1.2	0.35	1.3 U	1.3	0.37
Benzene	93	1.2 U	1.2	0.37	1.4 U	1.4	0.41	1.4 U	1.4	0.40	1.2 U	1.2	0.36	1.3 U	1.3	0.38
trans-1,3-Dichloropropene	---	1.2 U	1.2	0.27	1.4 U	1.4	0.30	1.4 U	1.4	0.30	1.2 U	1.2	0.27	1.3 U	1.3	0.28
2-Chloroethylvinylether	---	6.2 U	6.2	0.34	6.9 U	6.9	0.38	6.8 U	6.8	0.38	6.1 U	6.1	0.34	6.4 U	6.4	0.35
Bromoform	---	1.2 U	1.2	0.37	1.4 U	1.4	0.41	1.4 U	1.4	0.41	1.2 U	1.2	0.36	1.3 U	1.3	0.38
4-Methyl-2-Pentanone (MIBK)	170,000	6.2 U	6.2	0.52	6.9 U	6.9	0.58	6.8 U	6.8	0.57	6.1 U	6.1	0.52	6.4 U	6.4	0.54
2-Hexanone	32,000	6.2 U	6.2	0.54	6.9 U	6.9	0.61	6.8 U	6.8	0.60	6.1 U	6.1	0.54	6.4 U	6.4	0.56
Tetrachloroethene	260	1.2 U	1.2	0.32	1.4 U	1.4	0.35	1.4 U	1.4	0.35	1.2 U	1.2	0.32	1.3 U	1.3	0.33
1,1,2,2-Tetrachloroethane	13	1.2 U	1.2	0.31	1.4 U	1.4	0.35	1.4 U	1.4	0.35	1.2 U	1.2	0.31	1.3 U	1.3	0.32
Toluene	100,000	1.2 U	1.2	0.19	1.4 U	1.4	0.21	1.4 U	1.4	0.21	1.2 U	1.2	0.19	1.3 U	1.3	0.19
Chlorobenzene	26,000	1.2 U	1.2	0.27	1.4 U	1.4	0.30	1.4 U	1.4	0.30	1.2 U	1.2	0.27	1.3 U	1.3	0.28
Ethylbenzene	230	1.2 U	1.2	0.25	1.4 U	1.4	0.28	1.4 U	1.4	0.28	1.2 U	1.2	0.25	1.3 U	1.3	0.26
Styrene	16,000,000	1.2 U	1.2	0.17	1.4 U	1.4	0.19	1.4 U	1.4	0.19	1.2 U	1.2	0.17	1.3 U	1.3	0.18
Trichlorofluoromethane	200,000	1.2 U	1.2	0.33	1.4 U	1.4	0.37	1.4 U	1.4	0.36	1.2 U	1.2	0.33	1.3 U	1.3	0.34
1,1,2-Trichloro-1,2,2-trifuoroethane	1,000,000,000	2.5 U	2.5	0.36	2.8 U	2.8	0.40	2.7 U	2.7	0.39	2.5 U	2.5	0.35	2.6 U	2.6	0.37
m,p-Xylene	160,000	1.2 U	1.2	0.49	1.4 U	1.4	0.54	1.4 U	1.4	0.54	1.2 U	1.2	0.48	1.3 U	1.3	0.50
o-Xylene	200,000	1.2 U	1.2	0.28	1.4 U	1.4	0.31	1.4 U	1.4	0.31	1.2 U	1.2	0.28	1.3 U	1.3	0.29
1,2-Dichlorobenzene	68,000	1.2 U	1.2	0.36	1.4 U	1.4	0.40	1.4 U	1.4	0.40	1.2 U	1.2	0.36	1.3 U	1.3	0.37
1,3-Dichlorobenzene	3,840	1.2 U	1.2	0.28	1.4 U	1.4	0.31	1.4 U	1.4	0.31	1.2 U	1.2	0.28	1.3 U	1.3	0.29
1,4-Dichlorobenzene	3,500	1.2 U	1.2	0.29	1.4 U	1.4	0.32	1.4 U	1.4	0.32	1.2 U	1.2	0.29	1.3 U	1.3	0.30
Acrolein	---	62 UJ	62	4.7	69 UJ	69	5.3	68 UJ	68	5.2	61 UJ	61	4.7	64 U	64	4.9
Methyl Iodide	---	1.2 U	1.2	0.27	1.4 U	1.4	0.30	1.4 U	1.4	0.29	1.2 U	1.2	0.26	1.3 U	1.3	0.27
Bromoethane	---	2.5 U	2.5	0.54	2.8 U	2.8	0.61	2.7 U	2.7	0.60	2.5 U	2.5	0.54	2.6 U	2.6	0.56
Acrylonitrile	---	6.2 U	6.2	1.3	6.9 U	6.9	1.4	6.8 U	6.8	1.4	6.1 U	6.1	1.3	6.4 U	6.4	1.3
1,1-Dichloropropene	---	1.2 U	1.2	0.39	1.4 U	1.4	0.43	1.4 U	1.4	0.43	1.2 U	1.2	0.38	1.3 U	1.3	0.40
Dibromomethane	---	1.2 U	1.2	0.18	1.4 U	1.4	0.20	1.4 U	1.4	0.20	1.2 U	1.2	0.18	1.3 U	1.3	0.19
1,1,1,2-Tetrachloroethane	---	1.2 U	1.2	0.29	1.4 U	1.4	0.32	1.4 U	1.4	0.32	1.2 U	1.2	0.29	1.3 U	1.3	0.30
1,2-Dibromo-3-chloropropane	---	6.2 U	6.2	0.73	6.9 U	6.9	0.81	6.8 U	6.8	0.80	6.1 U	6.1	0.72	6.4 U	6.4	0.75
1,2,3-Trichloropropane	---	2.5 U	2.5	0.64	2.8 U	2.8	0.71	2.7 U	2.7	0.71	2.5 U	2.5	0.64	2.6 U	2.6	0.66
trans-1,4-Dichloro-2-butene	---	6.2 U	6.2	0.54	6.9 U	6.9	0.60	6.8 U	6.8	0.60	6.1 U	6.1	0.54	6.4 U	6.4	0.56
1,3,5-Trimethylbenzene	800,000	1.2 U	1.2	0.31	1.4 U	1.4	0.35	1.4 U	1.4	0.35	1.2 U	1.2	0.31	1.3 U	1.3	0.32
1,2,4-Trimethylbenzene	800,000	1.2 U	1.2	0.28	1.4 U	1.4	0.32	1.4 U	1.4	0.31	1.2 U	1.2	0.28	1.3 U	1.3	0.29
Hexachlorobutadiene	---	6.2 U	6.2	0.51	6.9 U	6.9	0.57	6.8 U	6.8	0.56	6.1 U	6.1	0.50	6.4 U	6.4	0.52

TABLE M-3
MONITORING WELL BORINGS SOIL ANALYTICAL RESULTS
BOEING ISAACSON-THOMPSON
REMEDIAL INVESTIGATION

	Preliminary Cleanup Level	IT-MW-18(2-3.5) TW27A 11/08/2011			IT-MW-18(5-6.5) TW27B 11/08/2011			IT-MW-18(8-9.5) TW27D 11/08/2011			IT-MW-18(11.5-13) TW27C 11/08/2011			IT-MW-19(2-3.5) TW35C 11/09/2011		
		Result	Reporting Limit	Detection Limit	Result	Reporting Limit	Detection Limit	Result	Reporting Limit	Detection Limit	Result	Reporting Limit	Detection Limit	Result	Reporting Limit	Detection Limit
Ethylene Dibromide	---	1.2 U	1.2	0.22	1.4 U	1.4	0.24	1.4 U	1.4	0.24	1.2 U	1.2	0.22	1.3 U	1.3	0.23
Bromochloromethane	---	1.2 U	1.2	0.40	1.4 U	1.4	0.45	1.4 U	1.4	0.44	1.2 U	1.2	0.40	1.3 U	1.3	0.41
2,2-Dichloropropane	---	1.2 U	1.2	0.36	1.4 U	1.4	0.40	1.4 U	1.4	0.40	1.2 U	1.2	0.36	1.3 U	1.3	0.37
1,3-Dichloropropane	---	1.2 U	1.2	0.26	1.4 U	1.4	0.29	1.4 U	1.4	0.29	1.2 U	1.2	0.26	1.3 U	1.3	0.27
Isopropylbenzene	78,000	1.2 U	1.2	0.29	1.4 U	1.4	0.32	1.4 U	1.4	0.32	1.2 U	1.2	0.29	1.3 U	1.3	0.30
n-Propylbenzene	11,000	1.2 U	1.2	0.34	1.4 U	1.4	0.38	1.4 U	1.4	0.37	1.2 U	1.2	0.33	1.3 U	1.3	0.35
Bromobenzene	---	1.2 U	1.2	0.19	1.4 U	1.4	0.21	1.4 U	1.4	0.21	1.2 U	1.2	0.19	1.3 U	1.3	0.20
2-Chlorotoluene	---	1.2 U	1.2	0.37	1.4 U	1.4	0.41	1.4 U	1.4	0.41	1.2 U	1.2	0.37	1.3 U	1.3	0.38
4-Chlorotoluene	400,000	1.2 U	1.2	0.34	1.4 U	1.4	0.38	1.4 U	1.4	0.38	1.2 U	1.2	0.34	1.3 U	1.3	0.35
tert-Butylbenzene	---	1.2 U	1.2	0.38	1.4 U	1.4	0.42	1.4 U	1.4	0.42	1.2 U	1.2	0.38	1.3 U	1.3	0.39
sec-Butylbenzene	---	1.2 U	1.2	0.30	1.4 U	1.4	0.33	1.4 U	1.4	0.33	1.2 U	1.2	0.29	1.3 U	1.3	0.31
4-Isopropyltoluene	---	1.2 U	1.2	0.29	1.4 U	1.4	0.33	1.4 U	1.4	0.32	1.2 U	1.2	0.29	1.3 U	1.3	0.30
n-Butylbenzene	27,000	1.2 U	1.2	0.32	1.4 U	1.4	0.36	1.4 U	1.4	0.36	1.2 U	1.2	0.32	1.3 U	1.3	0.34
1,2,4-Trichlorobenzene	80	6.2 U	6.2	0.41	6.9 U	6.9	0.46	6.8 U	6.8	0.45	6.1 U	6.1	0.41	6.4 U	6.4	0.42
Naphthalene	2,100	6.2 U	6.2	0.53	6.9 U	6.9	0.59	6.8 U	6.8	0.59	6.1 U	6.1	0.53	6.4 U	6.4	0.55
1,2,3-Trichlorobenzene	---	6.2 U	6.2	0.38	6.9 U	6.9	0.42	6.8 U	6.8	0.42	6.1 U	6.1	0.37	6.4 U	6.4	0.39
SEMIVOLATILES (µg/kg)																
Method SW8270D																
Phenol	1,900,000	20 U	20	8.4	19 U	19	8.1	**10** J1	19	8.2	**11** J1	20	8.5	20 U	20	8.5
Bis-(2-Chloroethyl) Ether	---	20 U	20	3.3	19 U	19	3.1	19 U	19	3.2	20 U	20	3.3	20 U	20	3.3
2-Chlorophenol	---	20 U	20	2.3	19 U	19	2.2	19 U	19	2.3	20 U	20	2.4	20 U	20	2.3
1,3-Dichlorobenzene	3,840	20 U	20	2.6	19 U	19	2.5	19 U	19	2.5	20 U	20	2.6	20 U	20	2.6
1,4-Dichlorobenzene	3,500	20 U	20	2.8	19 U	19	2.7	19 U	19	2.7	20 U	20	2.8	20 U	20	2.8
Benzyl Alcohol	8,000,000	20 U	20	5.9	**18** J1	19	5.7	**25**	19	5.8	20 U	20	6.0	20 U	20	6.0
1,2-Dichlorobenzene	68,000	20 U	20	2.4	19 U	19	2.3	19 U	19	2.4	20 U	20	2.5	20 U	20	2.5
2-Methylphenol	250,000	20 U	20	5.1	19 U	19	4.9	19 U	19	5.0	20 U	20	5.2	20 U	20	5.2
2,2'-Oxybis(1-Chloropropane)	---	20 U	20	3.7	19 U	19	3.5	19 U	19	3.6	20 U	20	3.7	20 U	20	3.7
4-Methylphenol	41,000	39 U	39	6.5	**45**	38	6.2	**43**	38	6.3	40 U	40	6.6	39 U	39	6.5
N-Nitroso-Di-N-Propylamine	---	20 U	20	3.3	19 U	19	3.1	19 U	19	3.2	20 U	20	3.3	20 U	20	3.3
Hexachloroethane	---	20 U	20	2.9	19 U	19	2.8	19 U	19	2.8	20 U	20	2.9	20 U	20	2.9
Nitrobenzene	---	20 U	20	4.0	19 U	19	3.8	19 U	19	3.9	20 U	20	4.0	20 U	20	4.0
Isophorone	---	20 U	20	2.8	19 U	19	2.7	19 U	19	2.7	20 U	20	2.8	20 U	20	2.8
2-Nitrophenol	---	98 U	98	38	94 U	94	36	95 U	95	37	99 U	99	38	98 U	98	38
2,4-Dimethylphenol	95,000	39 U	39	3.4	**16** J1	38	3.2	38 U	38	3.3	40 U	40	3.4	39 U	39	3.4
Benzoic Acid	9,000	390 U	390	99	**140** J1	380	95	380 U	380	96	400 U	400	100	390 U	390	99
bis(2-Chloroethoxy) Methane	---	20 U	20	2.0	19 U	19	1.9	19 U	19	1.9	20 U	20	2.0	20 U	20	2.0
2,4-Dichlorophenol	---	200 U	200	21	190 U	190	20	190 U	190	20	200 U	200	21	200 U	200	21
1,2,4-Trichlorobenzene	80	20 U	20	3.4	19 U	19	3.3	19 U	19	3.3	20 U	20	3.4	20 U	20	3.4
Naphthalene	2,100	20 U	20	2.7	**66**	19	2.6	**55**	19	2.6	**13** J1	20	2.7	**9.8** J1	20	2.7
4-Chloroaniline	---	260 U	260	22	250 U	250	21	260 U	260	21	270 U	270	22	260 U	260	22
Hexachlorobutadiene	---	98 U	98	4.5	94 U	94	4.3	95 U	95	4.3	99 U	99	4.5	98 U	98	4.5
4-Chloro-3-methylphenol	740,000	98 U	98	15	94 U	94	14	95 U	95	14	99 U	99	15	98 U	98	15
2-Methylnaphthalene	320,000	**9.8** J1	20	3.0	**57**	19	2.9	**36**	19	2.9	20 U	20	3.0	**14** J1	20	3.0
Hexachlorocyclopentadiene	---	390 U	390	65	380 U	380	62	380 U	380	63	400 U	400	66	390 U	390	65
2,4,6-Trichlorophenol	---	98 U	98	22	94 U	94	21	95 U	95	21	99 U	99	22	98 U	98	22
2,4,5-Trichlorophenol	---	98 U	98	21	94 U	94	20	95 U	95	20	99 U	99	21	98 U	98	21
2-Chloronaphthalene	---	20 U	20	2.6	19 U	19	2.5	19 U	19	2.5	20 U	20	2.6	20 U	20	2.6
2-Nitroaniline	---	98 U	98	18	94 U	94	17	95 U	95	17	99 U	99	18	98 U	98	18
Dimethylphthalate	71	20 U	20	2.8	19 U	19	2.7	19 U	19	2.8	20 U	20	2.9	20 U	20	2.8
Acenaphthylene	---	20 U	20	5.6	**15** J1	19	5.4	**13** J1	19	5.4	20 U	20	5.6	20 U	20	5.6
3-Nitroaniline	---	98 U	98	22	94 U	94	21	95 U	95	21	99 U	99	22	98 U	98	22
Acenaphthene	230,000	20 U	20	3.2	**18** J1	19	3.1	**14** J1	19	3.1	20 U	20	3.2	20 U	20	3.2
2,4-Dinitrophenol	---	830 U	830	110	800 U	800	100	810 U	810	110	840 U	840	110	840 U	840	110
4-Nitrophenol	---	98 U	98	34	94 U	94	33	95 U	95	33	99 U	99	34	98 U	98	34
Dibenzofuran	80,000	20 U	20	4.0	**38**	19	3.8	**25**	19	3.9	20 U	20	4.1	20 U	20	4.0
2,6-Dinitrotoluene	---	98 U	98	30	94 U	94	29	95 U	95	29	99 U	99	30	98 U	98	30

TABLE M-3
MONITORING WELL BORINGS SOIL ANALYTICAL RESULTS
BOEING ISAACSON-THOMPSON
REMEDIAL INVESTIGATION

	Preliminary Cleanup Level	IT-MW-18(2-3.5) TW27A 11/08/2011			IT-MW-18(5-6.5) TW27B 11/08/2011			IT-MW-18(8-9.5) TW27D 11/08/2011			IT-MW-18(11.5-13) TW27C 11/08/2011			IT-MW-19(2-3.5) TW35C 11/09/2011		
		Result	Reporting Limit	Detection Limit	Result	Reporting Limit	Detection Limit	Result	Reporting Limit	Detection Limit	Result	Reporting Limit	Detection Limit	Result	Reporting Limit	Detection Limit
2,4-Dinitrotoluene	---	98 U	98	19	94 U	94	18	95 U	95	19	99 U	99	19	98 U	98	19
Diethylphthalate	178,000	49 U	49	36	47 U	47	34	48 U	48	35	49 U	49	36	49 U	49	36
4-Chlorophenyl-phenylether	---	20 U	20	5.2	19 U	19	5.0	19 U	19	5.0	20 U	20	5.2	20 U	20	5.2
Fluorene	150,000	20 U	20	4.2	**23**	19	4.1	**30**	19	4.1	20 U	20	4.3	20 U	20	4.3
4-Nitroaniline	---	98 U	98	37	94 U	94	36	95 U	95	36	99 U	99	37	98 U	98	37
4,6-Dinitro-2-Methylphenol	---	200 U	200	21	190 U	190	20	190 U	190	20	200 U	200	21	200 U	200	21
N-Nitrosodiphenylamine	204,000	20 U	20	5.3	19 U	19	5.1	19 U	19	5.1	20 U	20	5.3	20 U	20	5.3
4-Bromophenyl-phenylether	---	20 U	20	4.9	19 U	19	4.7	19 U	19	4.8	20 U	20	5.0	20 U	20	4.9
Hexachlorobenzene	---	20 U	20	4.2	19 U	19	4.0	19 U	19	4.1	20 U	20	4.2	20 U	20	4.2
Pentachlorophenol	---	200 U	200	47	190 U	190	45	190 U	190	46	200 U	200	48	200 U	200	48
Phenanthrene	---	**18** J1	20	3.6	**86**	19	3.4	**85**	19	3.5	**11** J1	20	3.6	**98**	20	3.6
Carbazole	50,000	20 U	20	2.6	19 U	19	2.5	19 U	19	2.6	20 U	20	2.7	**16** J, J1	20	2.6
Anthracene	1,600,000	20 U	20	4.4	**16** J1	19	4.2	**14** J1	19	4.3	20 U	20	4.4	**19** J1	20	4.4
Di-n-Butylphthalate	26,000	20 U	20	8.0	19 U	19	7.6	19 U	19	7.8	20 U	20	8.1	20 U	20	8.0
Fluoranthene	230,000	20 U	20	2.8	**79**	19	2.7	**80**	19	2.8	20 U	20	2.9	**150**	20	2.9
Pyrene	240,000	**14** J1	20	1.9	**68**	19	1.8	**58**	19	1.8	20 U	20	1.9	**140**	20	1.9
Butylbenzylphthalate	1,700	20 U	20	6.0	19 U	19	5.8	19 U	19	5.8	20 U	20	6.1	20 U	20	6.0
3,3'-Dichlorobenzidine	---	150 U	150	17	140 U	140	17	140 U	140	17	150 U	150	18	150 U	150	17
Benzo(a)anthracene	---	20 U	20	3.2	**21**	19	3.1	**13** J1	19	3.1	20 U	20	3.3	**69**	20	3.2
bis(2-Ethylhexyl)phthalate	56,600	**22** J1	24	14	**29**	23	14	**32**	24	14	**17** J1	25	14	25 U	25	14
Chrysene	---	**27**	20	3.7	**29**	19	3.5	**21**	19	3.6	20 U	20	3.7	**78**	20	3.7
Di-n-Octyl phthalate	---	20 U	20	5.7	19 U	19	5.5	19 U	19	5.6	20 U	20	5.8	20 U	20	5.7
Benzo(a)pyrene	---	20 U	20	5.3	19 U	19	5.1	19 U	19	5.2	20 U	20	5.4	**90**	20	5.4
Indeno(1,2,3-cd)pyrene	---	20 U	20	4.6	19 U	19	4.4	19 U	19	4.4	20 U	20	4.6	**53**	20	4.6
Dibenz(a,h)anthracene	---	20 U	20	4.2	19 U	19	4.0	19 U	19	4.1	20 U	20	4.3	**14** J1	20	4.2
Benzo(g,h,i)perylene	---	**13** J1	20	4.3	19 U	19	4.1	19 U	19	4.2	20 U	20	4.3	**64**	20	4.3
1-Methylnaphthalene	16,000	20 U	20	2.6	**52**	19	2.5	**32**	19	2.5	20 U	20	2.6	**14** J1	20	2.6
Total Benzofluoranthenes	---	**17** J1	20	2.7	**34**	19	2.6	**33**	19	2.6	20 U	20	2.7	**130**	20	2.7
cPAH TEQ	15	**2.0** J	NA	NA	**5.8**	NA	NA	**4.8** J	NA	NA	ND	NA	NA	**117**	NA	NA
PAHs (µg/kg)																
Method SW8270D-SIM																
Naphthalene	2,100	**6.5**	4.9	2.6	**71**	4.7	2.5	**30**	4.8	2.5	**3.6** J1	5.0	2.6	**18**	4.9	2.6
2-Methylnaphthalene	320,000	**10**	4.9	1.5	**51**	4.7	1.4	**17**	4.8	1.4	5.0 U	5.0	1.5	**21**	4.9	1.5
1-Methylnaphthalene	16,000	**8.9**	4.9	1.7	**59**	4.7	1.6	**18**	4.8	1.6	5.0 U	5.0	1.7	**17**	4.9	1.7
Total Naphthalenes	---	**25.4**	NA	NA	**181**	NA	NA	**65**	NA	NA	**3.6** J1	NA	NA	**56**	NA	NA
Acenaphthylene	---	4.9 U	4.9	1.2	**20**	4.7	1.2	4.8 U	4.8	1.2	5.0 U	5.0	1.3	**4.2** J1	4.9	1.2
Acenaphthene	230,000	4.9 U	4.9	1.3	**34**	4.7	1.2	**16**	4.8	1.3	5.0 U	5.0	1.3	**15**	4.9	1.3
Fluorene	150,000	4.9 U	4.9	1.3	**24**	4.7	1.2	**12**	4.8	1.2	5.0 U	5.0	1.3	**9.4**	4.9	1.3
Phenanthrene	---	**19**	4.9	1.9	**100**	4.7	1.9	**51**	4.8	1.9	**8.1**	5.0	2.0	**140**	4.9	1.9
Anthracene	1,600,000	4.9 U	4.9	1.4	**13**	4.7	1.4	**9.0**	4.8	1.4	5.0 U	5.0	1.5	**29**	4.9	1.4
Fluoranthene	230,000	**9.2**	4.9	1.7	**59**	4.7	1.7	**41**	4.8	1.7	**5.1**	5.0	1.8	**210**	4.9	1.7
Pyrene	240,000	**11**	4.9	2.2	**48**	4.7	2.1	**34**	4.8	2.1	**5.0**	5.0	2.2	**170**	4.9	2.2
Benzo(a)anthracene	---	**6.0**	4.9	1.6	**13**	4.7	1.5	**9.8**	4.8	1.5	5.0 U	5.0	1.6	**100**	4.9	1.6
Chrysene	---	**25**	4.9	1.8	**19**	4.7	1.8	**14**	4.8	1.8	**2.9** J1	5.0	1.9	**110**	4.9	1.8
Benzo(a)pyrene	---	**7.4**	4.9	1.7	**24**	4.7	1.6	**12**	4.8	1.7	5.0 U	5.0	1.7	**110**	4.9	1.7
Indeno(1,2,3-cd)pyrene	---	**7.6**	4.9	3.4	**6.4**	4.7	3.3	**4.5** J1	4.8	3.3	5.0 U	5.0	3.5	**57**	4.9	3.4
Dibenz(a,h)anthracene	---	**6.5**	4.9	2.3	4.7 U	4.7	2.2	**2.7** J1	4.8	2.3	5.0 U	5.0	2.4	**21**	4.9	2.3
Benzo(g,h,i)perylene	---	**12**	4.9	3.0	**10**	4.7	2.9	**7.9**	4.8	2.9	5.0 U	5.0	3.0	**77**	4.9	3.0
Dibenzofuran	80,000	**2.5** J1	4.9	1.5	**29**	4.7	1.4	**15**	4.8	1.4	**2.8** J1	5.0	1.5	**9.8**	4.9	1.5
Total Benzofluoranthenes	---	**13**	4.9	1.8	**17**	4.7	1.7	**19**	4.8	1.8	5.0 U	5.0	1.8	**170**	4.9	1.8
cPAH TEQ	15	**11** J	NA	NA	**27.8**	NA	NA	**16**	NA	NA	**0.03** J	NA	NA	**146**	NA	NA

TABLE M-3
MONITORING WELL BORINGS SOIL ANALYTICAL RESULTS
BOEING ISAACSON-THOMPSON
REMEDIAL INVESTIGATION

	Preliminary Cleanup Level	IT-MW-18(2-3.5) TW27A 11/08/2011			IT-MW-18(5-6.5) TW27B 11/08/2011			IT-MW-18(8-9.5) TW27D 11/08/2011			IT-MW-18(11.5-13) TW27C 11/08/2011			IT-MW-19(2-3.5) TW35C 11/09/2011		
		Result	Reporting Limit	Detection Limit	Result	Reporting Limit	Detection Limit	Result	Reporting Limit	Detection Limit	Result	Reporting Limit	Detection Limit	Result	Reporting Limit	Detection Limit
PCBs (µg/kg)																
Method SW8082																
Aroclor 1016	0.72	32 U	32	1.9	33 U	33	2.0	31 U	31	1.9	33 U	33	2.0	30 U	30	1.9
Aroclor 1242	0.72	32 U	32	2.4	33 U	33	2.4	31 U	31	2.3	33 U	33	2.4	30 U	30	2.3
Aroclor 1248	220	32 U	32	2.4	33 U	33	2.4	31 U	31	2.3	33 U	33	2.4	30 U	30	2.3
Aroclor 1254	0.29	32 U	32	2.4	33 U	33	2.4	31 U	31	2.3	33 U	33	2.4	30 U	30	2.3
Aroclor 1260	5.4	32 U	32	2.4	33 U	33	2.4	**29** J1	31	2.3	33 U	33	2.4	30 U	30	2.3
Aroclor 1221	---	32 U	32	2.4	33 U	33	2.4	31 U	31	2.3	33 U	33	2.4	30 U	30	2.3
Aroclor 1232	---	32 U	32	2.4	33 U	33	2.4	31 U	31	2.3	33 U	33	2.4	30 U	30	2.3
Total PCBs	1.8	ND	NA	NA	ND	NA	NA	**29** J	NA	NA	ND	NA	NA	ND	NA	NA
TOTAL PETROLEUM HYDROCARBONS (mg/kg)																
NWTPH-Dx																
Diesel-Range Organics	2,000	**26**	5.2	1.3	**27**	6.4	1.6	**32**	6.5	1.7	6.8 U	6.8	1.7	**18**	5.4	1.4
Motor Oil-Range Organics	2,000	**110**	10	1.6	**34**	13	2.0	**41**	13	2.0	**20**	14	2.1	**170**	11	1.7
NWTPH-G																
Gasoline-Range Organics	100/30	6.4 U	6.4	3.1	9.2 U	9.2	4.4	8.7 U	8.7	4.2	8.5 U	8.5	4.1	6.4 U	6.4	3.0
TOTAL METALS (mg/kg)																
Methods 200.8/7471A/SW7196A																
Antimony	5	0.2 UJ	0.2	0.014	0.2 U	0.2	0.016	0.3 U	0.3	0.016	0.3 U	0.3	0.017	0.2 U	0.2	0.014
Arsenic	7	**8.8**	0.2	0.093	**35.5**	0.2	0.11	**18.9**	0.3	0.11	**13.5**	0.3	0.12	**3.4**	0.2	0.093
Barium	640	**44.3** J	0.5	0.060	**52.8**	0.6	0.068	**59.7**	0.6	0.071	**70.7**	0.7	0.075	**47.9**	0.5	0.060
Beryllium	160	0.2 U	0.2	0.019	**0.4**	0.2	0.022	**0.3**	0.3	0.023	**0.3**	0.3	0.024	0.2 U	0.2	0.019
Cadmium	1.3	0.1 U	0.1	0.013	**0.4**	0.1	0.015	**0.5**	0.1	0.015	**0.2**	0.1	0.016	**0.2**	0.1	0.013
Chromium	1,480	**53.3** J	0.5	0.040	**15.3**	0.6	0.046	**16.8**	0.6	0.048	**16.1**	0.7	0.051	**12.3**	0.5	0.041
Chromium VI	3.8	0.419 UJ	0.419	0.030	0.528 U	0.528	0.030	0.520 U	0.520	0.030	0.543 U	0.543	0.030	0.434 U	0.434	0.030
Copper	36	**15.7** J	0.5	0.038	**20.9**	0.6	0.044	**30.8**	0.6	0.046	**25.9**	0.7	0.048	**34.5**	0.5	0.039
Lead	250	**7.6**	0.1	0.050	**6.4**	0.1	0.057	**7.6**	0.1	0.060	**4.9**	0.1	0.063	**47.1**	0.1	0.050
Mercury	1.5	0.02 U	0.02	0.0012	**0.06**	0.03	0.0013	**0.06**	0.03	0.0017	**0.06**	0.03	0.0013	**0.04**	0.02	0.0010
Nickel	210	**10.7**	0.5	0.052	**14.6**	0.6	0.060	**15.4**	0.6	0.062	**14.2**	0.7	0.065	**13.4**	0.5	0.052
Selenium	1.0	0.5 U	0.5	0.11	0.6 U	0.6	0.12	0.6 U	0.6	0.13	0.7 U	0.7	0.13	0.5 U	0.5	0.11
Silver	170	0.2 U	0.2	0.0085	0.2 U	0.2	0.0097	0.3 U	0.3	0.010	0.3 U	0.3	0.011	0.2 U	0.2	0.0086
Thallium	0.67	0.2 U	0.2	0.0032	0.2 U	0.2	0.0036	0.3 U	0.3	0.0038	0.3 U	0.3	0.0040	0.2 U	0.2	0.0032
Zinc	1,400	**41**	4	0.36	**46**	5	0.41	**57**	5	0.43	**37**	5	0.45	**72**	4	0.36

TABLE M-3
MONITORING WELL BORINGS SOIL ANALYTICAL RESULTS
BOEING ISAACSON-THOMPSON
REMEDIAL INVESTIGATION

	Preliminary Cleanup Level	IT-MW-19(5-6.5) TW35D 11/09/2011			IT-MW-19(8-9.5) TW35E 11/09/2011			IT-MW-19(13-14.5) TW35F 11/09/2011			IT-MW-20(2-3.5) TW35G 11/09/2011			IT-MW-20(5-6.5) TW35H 11/09/2011		
		Result	Reporting Limit	Detection Limit	Result	Reporting Limit	Detection Limit	Result	Reporting Limit	Detection Limit	Result	Reporting Limit	Detection Limit	Result	Reporting Limit	Detection Limit
VOLATILES (µg/kg)																
Method SW8260C																
Chloromethane	1,600	1.2 U	1.2	0.33	1.3 U	1.3	0.34	1.2 U	1.2	0.33	1.1 U	1.1	0.28	1.1 U	1.1	0.30
Bromomethane	---	1.2 UJ	1.2	0.23	1.3 UJ	1.3	0.24	1.2 UJ	1.2	0.23	1.1 UJ	1.1	0.20	1.1 UJ	1.1	0.21
Vinyl Chloride	7.4	1.2 U	1.2	0.29	1.3 U	1.3	0.30	1.2 U	1.2	0.29	1.1 U	1.1	0.25	1.1 U	1.1	0.26
Chloroethane	280,000	1.2 U	1.2	0.57	1.3 U	1.3	0.59	1.2 U	1.2	0.58	1.1 U	1.1	0.49	1.1 U	1.1	0.52
Methylene Chloride	2400	**3.0**	2.5	0.79	**2.8**	2.6	0.82	**2.3** J1	2.5	0.79	**2.2**	2.1	0.68	**1.7** J1	2.2	0.71
Acetone	510,000	**23**	6.2	0.60	**34**	6.4	0.62	**20**	6.2	0.60	**58**	5.3	0.51	**76**	5.6	0.54
Carbon Disulfide	75,000	1.2 U	1.2	0.69	**2.3**	1.3	0.72	**1.7**	1.2	0.70	**2.0**	1.1	0.60	1.1 U	1.1	0.63
1,1-Dichloroethene	81	1.2 U	1.2	0.42	1.3 U	1.3	0.43	1.2 U	1.2	0.42	1.1 U	1.1	0.36	1.1 U	1.1	0.38
1,1-Dichloroethane	710	1.2 U	1.2	0.25	1.3 U	1.3	0.26	1.2 U	1.2	0.25	1.1 U	1.1	0.22	1.1 U	1.1	0.23
trans-1,2-Dichloroethene	19,000	1.2 U	1.2	0.33	1.3 U	1.3	0.34	1.2 U	1.2	0.33	1.1 U	1.1	0.28	1.1 U	1.1	0.30
cis-1,2-Dichloroethene	2,600	1.2 U	1.2	0.30	1.3 U	1.3	0.31	1.2 U	1.2	0.30	1.1 U	1.1	0.26	1.1 U	1.1	0.27
Chloroform	200	1.2 U	1.2	0.29	1.3 U	1.3	0.30	1.2 U	1.2	0.29	1.1 U	1.1	0.25	1.1 U	1.1	0.26
1,2-Dichloroethane	70	1.2 U	1.2	0.24	1.3 U	1.3	0.25	1.2 U	1.2	0.24	1.1 U	1.1	0.20	1.1 U	1.1	0.21
2-Butanone	430,000	6.2 U	6.2	0.64	**3.6** J1	6.4	0.66	6.2 U	6.2	0.64	**11**	5.3	0.55	**3.6** J1	5.6	0.58
1,1,1-Trichloroethane	1,900,000	1.2 U	1.2	0.28	1.3 U	1.3	0.29	1.2 U	1.2	0.28	1.1 U	1.1	0.24	1.1 U	1.1	0.25
Carbon Tetrachloride	21	1.2 U	1.2	0.26	1.3 U	1.3	0.27	1.2 U	1.2	0.27	1.1 U	1.1	0.23	1.1 U	1.1	0.24
Vinyl Acetate	---	6.2 U	6.2	0.47	6.4 U	6.4	0.49	6.2 U	6.2	0.48	5.3 U	5.3	0.41	5.6 U	5.6	0.43
Bromodichloromethane	89	1.2 U	1.2	0.32	1.3 U	1.3	0.33	1.2 U	1.2	0.32	1.1 U	1.1	0.27	1.1 U	1.1	0.29
1,2-Dichloropropane	92	1.2 U	1.2	0.20	1.3 U	1.3	0.21	1.2 U	1.2	0.20	1.1 U	1.1	0.17	1.1 U	1.1	0.18
cis-1,3-Dichloropropene	---	1.2 U	1.2	0.28	1.3 U	1.3	0.29	1.2 U	1.2	0.28	1.1 U	1.1	0.24	1.1 U	1.1	0.25
Trichloroethene	51	1.2 U	1.2	0.26	1.3 U	1.3	0.27	1.2 U	1.2	0.26	1.1 U	1.1	0.23	1.1 U	1.1	0.24
Dibromochloromethane	---	1.2 U	1.2	0.33	1.3 U	1.3	0.34	1.2 U	1.2	0.33	1.1 U	1.1	0.28	1.1 U	1.1	0.30
1,1,2-Trichloroethane	73	1.2 U	1.2	0.35	1.3 U	1.3	0.37	1.2 U	1.2	0.36	1.1 U	1.1	0.30	1.1 U	1.1	0.32
Benzene	93	1.2 U	1.2	0.37	**2.4**	1.3	0.38	1.2 U	1.2	0.37	**1.9**	1.1	0.32	**0.6** J1	1.1	0.33
trans-1,3-Dichloropropene	---	1.2 U	1.2	0.27	1.3 U	1.3	0.28	1.2 U	1.2	0.27	1.1 U	1.1	0.23	1.1 U	1.1	0.24
2-Chloroethylvinylether	---	6.2 U	6.2	0.34	6.4 U	6.4	0.35	6.2 U	6.2	0.34	5.3 U	5.3	0.29	5.6 U	5.6	0.31
Bromoform	---	1.2 U	1.2	0.37	1.3 U	1.3	0.38	1.2 U	1.2	0.37	1.1 U	1.1	0.32	1.1 U	1.1	0.33
4-Methyl-2-Pentanone (MIBK)	170,000	6.2 U	6.2	0.52	6.4 U	6.4	0.54	6.2 U	6.2	0.52	5.3 U	5.3	0.45	5.6 U	5.6	0.47
2-Hexanone	32,000	6.2 U	6.2	0.54	6.4 U	6.4	0.56	6.2 U	6.2	0.55	5.3 U	5.3	0.47	5.6 U	5.6	0.49
Tetrachloroethene	260	1.2 U	1.2	0.32	1.3 U	1.3	0.33	1.2 U	1.2	0.32	1.1 U	1.1	0.27	1.1 U	1.1	0.29
1,1,2,2-Tetrachloroethane	13	1.2 U	1.2	0.31	1.3 U	1.3	0.33	1.2 U	1.2	0.32	1.1 U	1.1	0.27	1.1 U	1.1	0.28
Toluene	100,000	**0.8** J1	1.2	0.19	**0.9** J1	1.3	0.19	1.2 U	1.2	0.19	**1.1**	1.1	0.16	1.1 U	1.1	0.17
Chlorobenzene	26,000	1.2 U	1.2	0.27	1.3 U	1.3	0.28	1.2 U	1.2	0.27	1.1 U	1.1	0.23	1.1 U	1.1	0.25
Ethylbenzene	230	1.2 U	1.2	0.25	1.3 U	1.3	0.26	1.2 U	1.2	0.25	1.1 U	1.1	0.22	1.1 U	1.1	0.23
Styrene	16,000,000	1.2 U	1.2	0.17	1.3 U	1.3	0.18	1.2 U	1.2	0.17	1.1 U	1.1	0.15	1.1 U	1.1	0.16
Trichlorofluoromethane	200,000	1.2 U	1.2	0.33	1.3 U	1.3	0.34	1.2 U	1.2	0.33	1.1 U	1.1	0.28	1.1 U	1.1	0.30
1,1,2-Trichloro-1,2,2-trifuoroethane	1,000,000,000	2.5 U	2.5	0.36	2.6 U	2.6	0.37	2.5 U	2.5	0.36	2.1 U	2.1	0.31	2.2 U	2.2	0.32
m,p-Xylene	160,000	1.2 U	1.2	0.49	1.3 U	1.3	0.50	1.2 U	1.2	0.49	1.1 U	1.1	0.42	1.1 U	1.1	0.44
o-Xylene	200,000	1.2 U	1.2	0.28	1.3 U	1.3	0.29	1.2 U	1.2	0.28	1.1 U	1.1	0.24	1.1 U	1.1	0.25
1,2-Dichlorobenzene	68,000	1.2 U	1.2	0.36	1.3 U	1.3	0.38	1.2 U	1.2	0.37	1.1 U	1.1	0.31	1.1 U	1.1	0.33
1,3-Dichlorobenzene	3,840	1.2 U	1.2	0.28	1.3 U	1.3	0.29	1.2 U	1.2	0.28	1.1 U	1.1	0.24	1.1 U	1.1	0.26
1,4-Dichlorobenzene	3,500	1.2 U	1.2	0.29	1.3 U	1.3	0.30	1.2 U	1.2	0.29	1.1 U	1.1	0.25	1.1 U	1.1	0.26
Acrolein	---	62 U	62	4.7	64 U	64	4.9	62 U	62	4.8	53 U	53	4.1	56 U	56	4.3
Methyl Iodide	---	1.2 U	1.2	0.27	1.3 U	1.3	0.28	1.2 U	1.2	0.27	1.1 U	1.1	0.23	1.1 U	1.1	0.24
Bromoethane	---	2.5 U	2.5	0.55	2.6 U	2.6	0.57	2.5 U	2.5	0.55	2.1 U	2.1	0.47	2.2 U	2.2	0.49
Acrylonitrile	---	6.2 U	6.2	1.3	6.4 U	6.4	1.3	6.2 U	6.2	1.3	5.3 U	5.3	1.1	5.6 U	5.6	1.2
1,1-Dichloropropene	---	1.2 U	1.2	0.39	1.3 U	1.3	0.40	1.2 U	1.2	0.39	1.1 U	1.1	0.33	1.1 U	1.1	0.35
Dibromomethane	---	1.2 U	1.2	0.18	1.3 U	1.3	0.19	1.2 U	1.2	0.18	1.1 U	1.1	0.16	1.1 U	1.1	0.17
1,1,1,2-Tetrachloroethane	---	1.2 U	1.2	0.29	1.3 U	1.3	0.30	1.2 U	1.2	0.29	1.1 U	1.1	0.25	1.1 U	1.1	0.26
1,2-Dibromo-3-chloropropane	---	6.2 U	6.2	0.73	6.4 U	6.4	0.75	6.2 U	6.2	0.73	5.3 U	5.3	0.62	5.6 U	5.6	0.66
1,2,3-Trichloropropane	---	2.5 U	2.5	0.64	2.6 U	2.6	0.66	2.5 U	2.5	0.64	2.1 U	2.1	0.55	2.2 U	2.2	0.58
trans-1,4-Dichloro-2-butene	---	6.2 U	6.2	0.54	6.4 U	6.4	0.56	6.2 U	6.2	0.54	5.3 U	5.3	0.47	5.6 U	5.6	0.49
1,3,5-Trimethylbenzene	800,000	1.2 U	1.2	0.32	1.3 U	1.3	0.33	1.2 U	1.2	0.32	1.1 U	1.1	0.27	1.1 U	1.1	0.29
1,2,4-Trimethylbenzene	800,000	1.2 U	1.2	0.29	1.3 U	1.3	0.30	1.2 U	1.2	0.29	1.1 U	1.1	0.25	1.1 U	1.1	0.26
Hexachlorobutadiene	---	6.2 U	6.2	0.51	6.4 U	6.4	0.53	6.2 U	6.2	0.51	5.3 U	5.3	0.44	5.6 U	5.6	0.46

TABLE M-3
MONITORING WELL BORINGS SOIL ANALYTICAL RESULTS
BOEING ISAACSON-THOMPSON
REMEDIAL INVESTIGATION

	Preliminary Cleanup Level	IT-MW-19(5-6.5) TW35D 11/09/2011			IT-MW-19(8-9.5) TW35E 11/09/2011			IT-MW-19(13-14.5) TW35F 11/09/2011			IT-MW-20(2-3.5) TW35G 11/09/2011			IT-MW-20(5-6.5) TW35H 11/09/2011		
		Result	Reporting Limit	Detection Limit	Result	Reporting Limit	Detection Limit	Result	Reporting Limit	Detection Limit	Result	Reporting Limit	Detection Limit	Result	Reporting Limit	Detection Limit
Ethylene Dibromide	---	1.2 U	1.2	0.22	1.3 U	1.3	0.23	1.2 U	1.2	0.22	1.1 U	1.1	0.19	1.1 U	1.1	0.20
Bromochloromethane	---	1.2 U	1.2	0.40	1.3 U	1.3	0.42	1.2 U	1.2	0.40	1.1 U	1.1	0.34	1.1 U	1.1	0.36
2,2-Dichloropropane	---	1.2 U	1.2	0.36	1.3 U	1.3	0.38	1.2 U	1.2	0.36	1.1 U	1.1	0.31	1.1 U	1.1	0.33
1,3-Dichloropropane	---	1.2 U	1.2	0.26	1.3 U	1.3	0.27	1.2 U	1.2	0.26	1.1 U	1.1	0.22	1.1 U	1.1	0.23
Isopropylbenzene	78,000	1.2 U	1.2	0.29	1.3 U	1.3	0.30	1.2 U	1.2	0.29	1.1 U	1.1	0.25	1.1 U	1.1	0.26
n-Propylbenzene	11,000	1.2 U	1.2	0.34	1.3 U	1.3	0.35	1.2 U	1.2	0.34	1.1 U	1.1	0.29	1.1 U	1.1	0.31
Bromobenzene	---	1.2 U	1.2	0.19	1.3 U	1.3	0.20	1.2 U	1.2	0.19	1.1 U	1.1	0.16	1.1 U	1.1	0.17
2-Chlorotoluene	---	1.2 U	1.2	0.37	1.3 U	1.3	0.39	1.2 U	1.2	0.37	1.1 U	1.1	0.32	1.1 U	1.1	0.34
4-Chlorotoluene	400,000	1.2 U	1.2	0.34	1.3 U	1.3	0.36	1.2 U	1.2	0.35	1.1 U	1.1	0.30	1.1 U	1.1	0.31
tert-Butylbenzene	---	1.2 U	1.2	0.38	1.3 U	1.3	0.39	1.2 U	1.2	0.38	1.1 U	1.1	0.33	1.1 U	1.1	0.34
sec-Butylbenzene	---	1.2 U	1.2	0.30	1.3 U	1.3	0.31	1.2 U	1.2	0.30	1.1 U	1.1	0.26	1.1 U	1.1	0.27
4-Isopropyltoluene	---	1.2 U	1.2	0.29	1.3 U	1.3	0.30	1.2 U	1.2	0.29	1.1 U	1.1	0.25	1.1 U	1.1	0.27
n-Butylbenzene	27,000	1.2 U	1.2	0.33	1.3 U	1.3	0.34	1.2 U	1.2	0.33	1.1 U	1.1	0.28	1.1 U	1.1	0.29
1,2,4-Trichlorobenzene	80	6.2 U	6.2	0.41	6.4 U	6.4	0.43	6.2 U	6.2	0.41	5.3 U	5.3	0.35	5.6 U	5.6	0.37
Naphthalene	2,100	6.2 U	6.2	0.53	6.4 U	6.4	0.55	6.2 U	6.2	0.53	5.3 U	5.3	0.46	5.6 U	5.6	0.48
1,2,3-Trichlorobenzene	---	6.2 U	6.2	0.38	6.4 U	6.4	0.39	6.2 U	6.2	0.38	5.3 U	5.3	0.33	5.6 U	5.6	0.34
SEMIVOLATILES (µg/kg)																
Method SW8270D																
Phenol	1,900,000	19 U	19	8.1	18 U	18	7.9	19 U	19	8.3	20 U	20	8.6	19 U	19	8.2
Bis-(2-Chloroethyl) Ether	---	19 U	19	3.1	18 U	18	3.1	19 U	19	3.2	20 U	20	3.3	19 U	19	3.2
2-Chlorophenol	---	19 U	19	2.2	18 U	18	2.2	19 U	19	2.3	20 U	20	2.4	19 U	19	2.3
1,3-Dichlorobenzene	3,840	19 U	19	2.5	18 U	18	2.4	19 U	19	2.5	20 U	20	2.6	19 U	19	2.5
1,4-Dichlorobenzene	3,500	19 U	19	2.7	18 U	18	2.6	19 U	19	2.7	20 U	20	2.8	19 U	19	2.7
Benzyl Alcohol	8,000,000	19 U	19	5.7	18 U	18	5.6	19 U	19	5.8	20 U	20	6.0	19 U	19	5.8
1,2-Dichlorobenzene	68,000	19 U	19	2.3	18 U	18	2.3	19 U	19	2.4	20 U	20	2.5	19 U	19	2.4
2-Methylphenol	250,000	19 U	19	4.9	18 U	18	4.8	19 U	19	5.0	20 U	20	5.2	19 U	19	5.0
2,2'-Oxybis(1-Chloropropane)	---	19 U	19	3.5	18 U	18	3.4	19 U	19	3.6	20 U	20	3.7	19 U	19	3.6
4-Methylphenol	41,000	37 U	37	6.2	37 U	37	6.1	38 U	38	6.3	40 U	40	6.6	38 U	38	6.3
N-Nitroso-Di-N-Propylamine	---	19 U	19	3.1	18 U	18	3.1	19 U	19	3.2	20 U	20	3.3	19 U	19	3.2
Hexachloroethane	---	19 U	19	2.7	18 U	18	2.7	19 U	19	2.8	20 U	20	2.9	19 U	19	2.8
Nitrobenzene	---	19 U	19	3.8	18 U	18	3.7	19 U	19	3.9	20 U	20	4.0	19 U	19	3.8
Isophorone	---	19 U	19	2.7	18 U	18	2.6	19 U	19	2.7	20 U	20	2.8	19 U	19	2.7
2-Nitrophenol	---	93 U	93	36	92 U	92	35	95 U	95	37	99 U	99	38	95 U	95	37
2,4-Dimethylphenol	95,000	37 U	37	3.2	37 UJ	37	3.2	38 U	38	3.3	40 U	40	3.4	38 U	38	3.3
Benzoic Acid	9,000	370 U	370	94	370 U	370	93	380 U	380	96	400 U	400	100	380 U	380	96
bis(2-Chloroethoxy) Methane	---	19 U	19	1.9	18 U	18	1.8	19 U	19	1.9	20 U	20	2.0	19 U	19	1.9
2,4-Dichlorophenol	---	190 U	190	20	180 U	180	20	190 U	190	21	200 U	200	21	190 U	190	20
1,2,4-Trichlorobenzene	80	19 U	19	3.2	18 U	18	3.2	19 U	19	3.3	20 U	20	3.5	19 U	19	3.3
Naphthalene	2,100	19 U	19	2.6	**13** J1	18	2.5	**15** J1	19	2.6	**89**	20	2.7	19 U	19	2.6
4-Chloroaniline	---	250 U	250	21	250 U	250	20	260 U	260	21	270 U	270	22	260 U	260	21
Hexachlorobutadiene	---	93 U	93	4.3	92 U	92	4.2	95 U	95	4.4	99 U	99	4.5	95 U	95	4.3
4-Chloro-3-methylphenol	740,000	93 U	93	14	92 U	92	14	95 U	95	14	99 U	99	15	95 U	95	14
2-Methylnaphthalene	320,000	19 U	19	2.9	**25**	18	2.8	**32**	19	2.9	**140**	20	3.0	19 U	19	2.9
Hexachlorocyclopentadiene	---	370 U	370	62	370 U	370	61	380 U	380	63	400 U	400	66	380 U	380	63
2,4,6-Trichlorophenol	---	93 U	93	21	92 U	92	21	95 U	95	21	99 U	99	22	95 U	95	21
2,4,5-Trichlorophenol	---	93 U	93	20	92 U	92	20	95 U	95	20	99 U	99	21	95 U	95	20
2-Chloronaphthalene	---	19 U	19	2.5	18 U	18	2.4	19 U	19	2.5	20 U	20	2.6	19 U	19	2.5
2-Nitroaniline	---	93 U	93	17	92 U	92	17	95 U	95	18	99 U	99	18	95 U	95	17
Dimethylphthalate	71	19 U	19	2.7	18 U	18	2.7	19 U	19	2.8	20 U	20	2.9	19 U	19	2.7
Acenaphthylene	---	19 U	19	5.3	18 U	18	5.2	19 U	19	5.4	20 U	20	5.7	19 U	19	5.4
3-Nitroaniline	---	93 U	93	21	92 U	92	21	95 U	95	21	99 U	99	22	95 U	95	21
Acenaphthene	230,000	19 U	19	3.1	18 U	18	3.0	19 U	19	3.1	20 U	20	3.3	19 U	19	3.1
2,4-Dinitrophenol	---	790 U	790	100	780 U	780	100	810 U	810	110	840 U	840	110	800 U	800	110
4-Nitrophenol	---	93 U	93	32	92 U	92	32	95 U	95	33	99 U	99	34	95 U	95	33
Dibenzofuran	80,000	19 U	19	3.8	18 U	18	3.8	**10** J1	**10**	3.9	20 U	20	4.1	19 U	19	3.9
2,6-Dinitrotoluene	---	93 U	93	29	92 U	92	28	95 U	95	29	99 U	99	30	95 U	95	29

TABLE M-3
MONITORING WELL BORINGS SOIL ANALYTICAL RESULTS
BOEING ISAACSON-THOMPSON
REMEDIAL INVESTIGATION

	Preliminary Cleanup Level	IT-MW-19(5-6.5) TW35D 11/09/2011			IT-MW-19(8-9.5) TW35E 11/09/2011			IT-MW-19(13-14.5) TW35F 11/09/2011			IT-MW-20(2-3.5) TW35G 11/09/2011			IT-MW-20(5-6.5) TW35H 11/09/2011		
		Result	Reporting Limit	Detection Limit	Result	Reporting Limit	Detection Limit	Result	Reporting Limit	Detection Limit	Result	Reporting Limit	Detection Limit	Result	Reporting Limit	Detection Limit
2,4-Dinitrotoluene	---	93 U	93	18	92 U	92	18	95 U	95	19	99 U	99	19	95 U	95	18
Diethylphthalate	178,000	47 U	47	34	46 U	46	34	48 U	48	35	50 U	50	36	47 U	47	35
4-Chlorophenyl-phenylether	---	19 U	19	4.9	18 U	18	4.8	19 U	19	5.0	20 U	20	5.3	19 U	19	5.0
Fluorene	150,000	19 U	19	4.1	18 U	18	4.0	19 U	19	4.2	20 U	20	4.3	19 U	19	4.1
4-Nitroaniline	---	93 U	93	35	92 U	92	35	95 U	95	36	99 U	99	38	95 U	95	36
4,6-Dinitro-2-Methylphenol	---	190 U	190	20	180 U	180	19	190 U	190	20	200 U	200	21	190 U	190	20
N-Nitrosodiphenylamine	204,000	19 U	19	5.0	18 U	18	4.9	19 U	19	5.1	20 U	20	5.4	19 U	19	5.1
4-Bromophenyl-phenylether	---	19 U	19	4.7	18 U	18	4.6	19 U	19	4.8	20 U	20	5.0	19 U	19	4.8
Hexachlorobenzene	---	19 U	19	4.0	18 U	18	3.9	19 U	19	4.1	20 U	20	4.3	19 U	19	4.1
Pentachlorophenol	---	190 U	190	45	180 U	180	44	190 U	190	46	200 U	200	48	190 U	190	46
Phenanthrene	---	**70**	19	3.4	**26**	18	3.3	**24**	19	3.5	**110**	20	3.6	**10** J1	19	3.4
Carbazole	50,000	**11** J, J1	19	2.5	18 UJ	18	2.5	19 UJ	19	2.6	20 UJ	20	2.7	19 UJ	19	2.5
Anthracene	1,600,000	**16** J1	19	4.2	18 U	18	4.1	19 U	19	4.3	20 U	20	4.5	19 U	19	4.3
Di-n-Butylphthalate	26,000	19 U	19	7.6	18 U	18	7.5	19 U	19	7.8	20 U	20	8.1	19 U	19	7.7
Fluoranthene	230,000	**110**	19	2.7	**33**	18	2.7	**20**	19	2.8	**49**	20	2.9	19 U	19	2.8
Pyrene	240,000	**120**	19	1.8	**39**	18	1.8	**27**	19	1.9	**120**	20	1.9	19 U	19	1.8
Butylbenzylphthalate	1,700	19 U	19	5.7	18 U	18	5.6	19 U	19	5.9	20 U	20	6.1	19 U	19	5.8
3,3'-Dichlorobenzidine	---	140 U	140	17	140 UJ	140	16	140 U	140	17	150 U	150	18	140 U	140	17
Benzo(a)anthracene	---	**90**	19	3.1	**20**	18	3.0	19 U	19	3.1	**12** J1	20	3.3	19 U	19	3.1
bis(2-Ethylhexyl)phthalate	56,600	56 U	23	14	33 U	23	13	32 U	24	14	25 U	25	14	24 U	24	14
Chrysene	---	**99**	19	3.5	**28**	18	3.4	**10** J1	19	3.6	**72**	20	3.7	19 U	19	3.6
Di-n-Octyl phthalate	---	19 U	19	5.4	18 U	18	5.4	19 U	19	5.6	20 U	20	5.8	19 U	19	5.5
Benzo(a)pyrene	---	**94**	19	5.1	**28**	18	5.0	19 U	19	5.2	20 U	20	5.4	19 U	19	5.2
Indeno(1,2,3-cd)pyrene	---	**48**	19	4.4	**17** J1	18	4.3	19 U	19	4.5	**19** J1	20	4.6	19 U	19	4.4
Dibenz(a,h)anthracene	---	**15** J1	19	4.0	18 U	18	4.0	19 U	19	4.1	20 U	20	4.3	19 U	19	4.1
Benzo(g,h,i)perylene	---	**56**	19	4.1	**24**	18	4.0	19 U	19	4.2	**27**	20	4.4	19 U	19	4.2
1-Methylnaphthalene	16,000	19 U	19	2.5	**17** J1	18	2.5	**26**	19	2.6	**34**	20	2.7	19 U	19	2.5
Total Benzofluoranthenes	---	**150**	19	2.6	**44**	18	2.5	**12** J1	19	2.6	**78**	20	2.7	19 U	19	2.6
cPAH TEQ	15	**125**	NA	NA	**36** J	NA	NA	**1.3** J	NA	NA	**12** J	NA	NA	ND	NA	NA
PAHs (µg/kg)																
Method SW8270D-SIM																
Naphthalene	2,100	**6.9**	4.6	2.4	**6.0**	4.6	2.4	**10**	4.8	2.5	**100**	4.9	2.6	**3.5** J1	4.8	2.5
2-Methylnaphthalene	320,000	**7.2**	4.6	1.4	**8.2**	4.6	1.4	**17**	4.8	1.5	**220**	4.9	1.5	**3.2** J1	4.8	1.5
1-Methylnaphthalene	16,000	**7.0**	4.6	1.6	**7.1**	4.6	1.6	**17**	4.8	1.6	**230**	4.9	1.7	**3.5** J1	4.8	1.6
Total Naphthalenes	---	**21.1**	NA	NA	**21.3**	NA	NA	**44**	NA	NA	**550**	NA	NA	**10.2** J1	NA	NA
Acenaphthylene	---	4.6 U	4.6	1.2	4.6 U	4.6	1.2	4.8 U	4.8	1.2	4.9 U	4.9	1.2	4.8 U	4.8	1.2
Acenaphthene	230,000	**3.8** J1	4.6	1.2	4.6 U	4.6	1.2	**6.8**	4.8	1.3	4.9 U	4.9	1.3	4.8 U	4.8	1.3
Fluorene	150,000	**2.7** J1	4.6	1.2	4.6 U	4.6	1.2	**4.5** J1	4.8	1.2	4.9 U	4.9	1.3	4.8 U	4.8	1.2
Phenanthrene	---	**39**	4.6	1.8	**20**	4.6	1.8	**22**	4.8	1.9	**140**	4.9	1.9	**6.6**	4.8	1.9
Anthracene	1,600,000	**9.7**	4.6	1.4	**3.1** J1	4.6	1.3	**3.9** J1	4.8	1.4	4.9 U	4.9	1.4	4.8 U	4.8	1.4
Fluoranthene	230,000	**62**	4.6	1.6	**29**	4.6	1.6	**25**	4.8	1.7	**58**	4.9	1.7	**4.8**	4.8	1.7
Pyrene	240,000	**69**	4.6	2.1	**28**	4.6	2.0	**21**	4.8	2.1	**88**	4.9	2.2	**3.1** J1	4.8	2.1
Benzo(a)anthracene	---	**43**	4.6	1.5	**17**	4.6	1.5	**7.4**	4.8	1.5	**14**	4.9	1.6	4.8 U	4.8	1.5
Chrysene	---	**53**	4.6	1.7	**22**	4.6	1.7	**9.6**	4.8	1.8	**55**	4.9	1.8	**3.8** J1	4.8	1.8
Benzo(a)pyrene	---	**49**	4.6	1.6	**24**	4.6	1.6	**14**	4.8	1.7	**14**	4.9	1.7	4.8 U	4.8	1.7
Indeno(1,2,3-cd)pyrene	---	**25**	4.6	3.2	**14**	4.6	3.2	**4.3** J1	4.8	3.3	**16**	4.9	3.4	4.8 U	4.8	3.3
Dibenz(a,h)anthracene	---	**11**	4.6	2.2	**6.1**	4.6	2.2	4.8 U	4.8	2.3	**5.7**	4.9	2.3	4.8 U	4.8	2.3
Benzo(g,h,i)perylene	---	**30**	4.6	2.8	**16**	4.6	2.8	**5.5**	4.8	2.9	**21**	4.9	3.0	**4.6** J1	4.8	2.9
Dibenzofuran	80,000	**3.3** J1	4.6	1.4	**3.9** J1	4.6	1.4	**9.3**	4.8	1.4	4.9 U	4.9	1.5	4.8 U	4.8	1.4
Total Benzofluoranthenes	---	**63**	4.6	1.7	**37**	4.6	1.7	**17**	4.8	1.8	**65**	4.9	1.8	**3.4** J1	4.8	1.8
cPAH TEQ	15	**64**	NA	NA	**32**	NA	NA	**17** J	NA	NA	**25**	NA	NA	**0.4** J	NA	NA

TABLE M-3
MONITORING WELL BORINGS SOIL ANALYTICAL RESULTS
BOEING ISAACSON-THOMPSON
REMEDIAL INVESTIGATION

	Preliminary Cleanup Level	IT-MW-19(5-6.5) TW35D 11/09/2011			IT-MW-19(8-9.5) TW35E 11/09/2011			IT-MW-19(13-14.5) TW35F 11/09/2011			IT-MW-20(2-3.5) TW35G 11/09/2011			IT-MW-20(5-6.5) TW35H 11/09/2011		
		Result	Reporting Limit	Detection Limit	Result	Reporting Limit	Detection Limit	Result	Reporting Limit	Detection Limit	Result	Reporting Limit	Detection Limit	Result	Reporting Limit	Detection Limit
PCBs (µg/kg)																
Method SW8082																
Aroclor 1016	0.72	32 U	32	1.9	31 U	31	1.9	31 U	31	1.9	32 U	32	1.9	33 U	33	2.0
Aroclor 1242	0.72	32 U	32	2.4	31 U	31	2.3	31 U	31	2.3	32 U	32	2.3	33 U	33	2.4
Aroclor 1248	220	32 U	32	2.4	31 U	31	2.3	31 U	31	2.3	32 U	32	2.3	33 U	33	2.4
Aroclor 1254	0.29	32 U	32	2.4	31 U	31	2.3	31 U	31	2.3	32 U	32	2.3	33 U	33	2.4
Aroclor 1260	5.4	32 U	32	2.4	31 U	31	2.3	31 U	31	2.3	32 U	32	2.3	33 U	33	2.4
Aroclor 1221	---	32 U	32	2.4	31 U	31	2.3	31 U	31	2.3	32 U	32	2.3	33 U	33	2.4
Aroclor 1232	---	32 U	32	2.4	31 U	31	2.3	31 U	31	2.3	32 U	32	2.3	33 U	33	2.4
Total PCBs	1.8	ND	NA	NA	ND	NA	NA	ND	NA	NA	ND	NA	NA	ND	NA	NA
TOTAL PETROLEUM HYDROCARBONS (mg/kg)																
NWTPH-Dx																
Diesel-Range Organics	2,000	5.6 U	5.6	1.4	**6.6**	5.5	1.4	**11**	6.3	1.6	**1400**	590	590	6.2 U	6.2	1.6
Motor Oil-Range Organics	2,000	**12**	11	1.8	**15**	11	1.7	13 U	13	2.0	**190**	12	1.8	12 U	12	1.9
NWTPH-G																
Gasoline-Range Organics	100/30	6.7 U	6.7	3.2	6.3 U	6.3	3.0	7.7 U	7.7	3.7	**22**	8.4	4.0	**10**	7.6	3.6
TOTAL METALS (mg/kg)																
Methods 200.8/7471A/SW7196A																
Antimony	5	0.2 U	0.2	0.013	0.2 U	0.2	0.013	0.2 U	0.2	0.016	**0.6**	0.2	0.015	0.2 U	0.2	0.015
Arsenic	7	**13.1**	0.2	0.090	**7.5**	0.2	0.090	**10.5**	0.2	0.10	**7.5**	0.2	0.10	**139**	0.2	0.10
Barium	640	**46.2**	0.5	0.058	**28.1**	0.5	0.058	**45.5**	0.6	0.067	**324**	0.6	0.064	**60.5**	0.6	0.066
Beryllium	160	0.2 U	0.2	0.019	0.2 U	0.2	0.019	0.2 U	0.2	0.021	**0.3**	0.2	0.021	**0.3**	0.2	0.021
Cadmium	1.3	**0.5**	0.1	0.012	**0.2**	0.1	0.012	0.1 U	0.1	0.014	**13.5**	0.1	0.014	0.1 U	0.1	0.014
Chromium	1,480	**31.9**	0.5	0.039	**15.5**	0.5	0.039	**14.0**	0.6	0.045	**594**	6	0.44	**17.2**	0.6	0.045
Chromium VI	3.8	0.439 U	0.439	0.030	0.442 U	0.442	0.030	0.505 U	0.505	0.030	0.462 U	0.462	0.030	0.491 U	0.491	0.030
Copper	36	**299**	0.5	0.037	**25.3**	0.5	0.037	**17.5**	0.6	0.043	**150**	0.6	0.041	**83.1**	0.6	0.042
Lead	250	**46.1**	0.1	0.049	**17.4**	0.1	0.048	**4.2**	0.1	0.056	**684**	1	0.54	**5.2**	0.1	0.055
Mercury	1.5	**0.06**	0.02	0.0010	**0.03**	0.02	0.0012	**0.03**	0.03	0.0015	**0.08**	0.02	0.0012	**0.05**	0.03	0.0016
Nickel	210	**13.9**	0.5	0.051	**12.7**	0.5	0.050	**10.1**	0.6	0.058	**65.6**	0.6	0.056	**12.9**	0.6	0.058
Selenium	1.0	0.5 U	0.5	0.10	0.5 U	0.5	0.10	0.6 U	0.6	0.12	0.6 U	0.6	0.11	0.6 U	0.6	0.12
Silver	170	0.2 U	0.2	0.0083	0.2 U	0.2	0.0082	0.2 U	0.2	0.0095	**1.6**	0.2	0.0092	0.2 U	0.2	0.0094
Thallium	0.67	0.2 U	0.2	0.0031	0.2 U	0.2	0.0031	0.2 U	0.2	0.0036	0.2 U	0.2	0.0035	0.2 U	0.2	0.0035
Zinc	1,400	**144**	4	0.35	**66**	4	0.35	**30**	5	0.40	**2350**	50	3.9	**78**	5	0.40

TABLE M-3
MONITORING WELL BORINGS SOIL ANALYTICAL RESULTS
BOEING ISAACSON-THOMPSON
REMEDIAL INVESTIGATION

	Preliminary Cleanup Level	IT-MW-20(8-9.5) TW35I 11/09/2011			IT-MW-20(14.5-16) TW35J 11/09/2011			IT-MW-21(2-3.5) TW89D 11/11/2011			IT-MW-21(5-6.5) TW89E 11/11/2011			IT-MW-21(8-9.5) TW89F 11/11/2011		
		Result	Reporting Limit	Detection Limit	Result	Reporting Limit	Detection Limit	Result	Reporting Limit	Detection Limit	Result	Reporting Limit	Detection Limit	Result	Reporting Limit	Detection Limit
VOLATILES (µg/kg)																
Method SW8260C																
Chloromethane	1,600	1.4 U	1.4	0.37	1.1 U	1.1	0.28	1.2 UJ	1.2	0.31	1.3 UJ	1.3	0.34	1.6 U	1.6	0.41
Bromomethane	---	1.4 UJ	1.4	0.26	1.1 UJ	1.1	0.20	1.2 UJ	1.2	0.22	1.3 UJ	1.3	0.24	1.6 UJ	1.6	0.29
Vinyl Chloride	7.4	1.4 U	1.4	0.33	1.1 U	1.1	0.25	1.2 U	1.2	0.27	1.3 U	1.3	0.31	1.6 U	1.6	0.37
Chloroethane	280,000	1.4 U	1.4	0.65	1.1 U	1.1	0.50	1.2 UJ	1.2	0.54	1.3 UJ	1.3	0.60	1.6 U	1.6	0.72
Methylene Chloride	2400	**3.5**	2.8	0.90	**3.7**	2.1	0.68	**2.9**	2.3	0.74	**13**	2.6	0.83	**3.2**	3.1	0.99
Acetone	510,000	**130**	7.1	0.68	**10**	5.4	0.52	**22** J	5.8	0.56	**48** J	6.5	0.63	**46** J	7.8	0.75
Carbon Disulfide	75,000	1.4 U	1.4	0.79	1.1 U	1.1	0.60	**3.3**	1.2	0.65	1.3 U	1.3	0.73	**2.2**	1.6	0.87
1,1-Dichloroethene	81	1.4 U	1.4	0.47	1.1 U	1.1	0.36	1.2 U	1.2	0.39	1.3 U	1.3	0.44	1.6 U	1.6	0.52
1,1-Dichloroethane	710	1.4 U	1.4	0.29	1.1 U	1.1	0.22	1.2 U	1.2	0.24	1.3 U	1.3	0.27	1.6 U	1.6	0.32
trans-1,2-Dichloroethene	19,000	1.4 U	1.4	0.38	1.1 U	1.1	0.29	1.2 U	1.2	0.31	1.3 U	1.3	0.35	1.6 UJ	1.6	0.42
cis-1,2-Dichloroethene	2,600	1.4 U	1.4	0.34	1.1 U	1.1	0.26	1.2 U	1.2	0.28	1.3 U	1.3	0.31	1.6 U	1.6	0.38
Chloroform	200	1.4 U	1.4	0.33	1.1 U	1.1	0.25	1.2 U	1.2	0.27	1.3 U	1.3	0.31	1.6 U	1.6	0.37
1,2-Dichloroethane	70	1.4 U	1.4	0.27	1.1 U	1.1	0.21	1.2 U	1.2	0.22	1.3 U	1.3	0.25	1.6 U	1.6	0.30
2-Butanone	430,000	**5.9** J1	7.1	0.72	5.4 U	5.4	0.55	5.8 U	5.8	0.60	6.5 U	6.5	0.67	**4.3** J1	7.8	0.8
1,1,1-Trichloroethane	1,900,000	1.4 U	1.4	0.32	1.1 U	1.1	0.24	1.2 U	1.2	0.26	1.3 U	1.3	0.30	1.6 U	1.6	0.35
Carbon Tetrachloride	21	1.4 U	1.4	0.30	1.1 U	1.1	0.23	1.2 U	1.2	0.25	1.3 U	1.3	0.28	1.6 U	1.6	0.33
Vinyl Acetate	---	7.1 U	7.1	0.54	5.4 U	5.4	0.41	5.8 U	5.8	0.44	6.5 U	6.5	0.50	7.8 U	7.8	0.60
Bromodichloromethane	89	1.4 U	1.4	0.36	1.1 U	1.1	0.27	1.2 U	1.2	0.30	1.3 U	1.3	0.33	1.6 U	1.6	0.40
1,2-Dichloropropane	92	1.4 U	1.4	0.23	1.1 U	1.1	0.17	1.2 U	1.2	0.19	1.3 U	1.3	0.21	1.6 U	1.6	0.25
cis-1,3-Dichloropropene	---	1.4 U	1.4	0.32	1.1 U	1.1	0.24	1.2 U	1.2	0.26	1.3 U	1.3	0.30	1.6 U	1.6	0.35
Trichloroethene	51	1.4 U	1.4	0.30	1.1 U	1.1	0.23	**1.4**	1.2	0.25	1.3 U	1.3	0.28	**0.8** J1	1.6	0.33
Dibromochloromethane	---	1.4 U	1.4	0.38	1.1 U	1.1	0.29	1.2 U	1.2	0.31	1.3 U	1.3	0.35	1.6 U	1.6	0.42
1,1,2-Trichloroethane	73	1.4 U	1.4	0.40	1.1 U	1.1	0.31	1.2 U	1.2	0.33	1.3 U	1.3	0.37	1.6 U	1.6	0.45
Benzene	93	**0.8** J1	1.4	0.42	**1.0** J1	1.1	0.32	1.2 U	1.2	0.34	1.3 U	1.3	0.39	1.6 U	1.6	0.46
trans-1,3-Dichloropropene	---	1.4 U	1.4	0.31	1.1 U	1.1	0.23	1.2 U	1.2	0.25	1.3 U	1.3	0.28	1.6 U	1.6	0.34
2-Chloroethylvinylether	---	7.1 U	7.1	0.39	5.4 U	5.4	0.30	5.8 U	5.8	0.32	6.5 U	6.5	0.36	7.8 U	7.8	0.43
Bromoform	---	1.4 U	1.4	0.42	1.1 U	1.1	0.32	1.2 U	1.2	0.35	1.3 U	1.3	0.39	1.6 U	1.6	0.46
4-Methyl-2-Pentanone (MIBK)	170,000	7.1 U	7.1	0.59	5.4 U	5.4	0.45	5.8 U	5.8	0.49	6.5 U	6.5	0.55	7.8 U	7.8	0.66
2-Hexanone	32,000	7.1 U	7.1	0.62	5.4 U	5.4	0.47	5.8 U	5.8	0.51	6.5 U	6.5	0.57	7.8 U	7.8	0.69
Tetrachloroethene	260	1.4 U	1.4	0.36	1.1 U	1.1	0.28	1.2 U	1.2	0.30	1.3 U	1.3	0.34	1.6 U	1.6	0.40
1,1,2,2-Tetrachloroethane	13	1.4 U	1.4	0.36	1.1 U	1.1	0.27	1.2 U	1.2	0.29	1.3 U	1.3	0.33	1.6 U	1.6	0.40
Toluene	100,000	1.4 U	1.4	0.21	1.1 U	1.1	0.16	1.2 U	1.2	0.18	1.3 U	1.3	0.20	1.6 U	1.6	0.24
Chlorobenzene	26,000	1.4 U	1.4	0.31	1.1 U	1.1	0.24	1.2 U	1.2	0.26	1.3 U	1.3	0.29	1.6 U	1.6	0.34
Ethylbenzene	230	1.4 U	1.4	0.29	1.1 U	1.1	0.22	1.2 U	1.2	0.24	1.3 U	1.3	0.26	1.6 U	1.6	0.32
Styrene	16,000,000	1.4 U	1.4	0.19	1.1 U	1.1	0.15	1.2 U	1.2	0.16	1.3 U	1.3	0.18	1.6 U	1.6	0.22
Trichlorofluoromethane	200,000	1.4 U	1.4	0.38	1.1 U	1.1	0.29	1.2 U	1.2	0.31	1.3 U	1.3	0.35	1.6 U	1.6	0.42
1,1,2-Trichloro-1,2,2-trifuoroethane	1,000,000,000	2.8 U	2.8	0.41	2.1 U	2.1	0.31	2.3 U	2.3	0.33	2.6 U	2.6	0.38	3.1 U	3.1	0.45
m,p-Xylene	160,000	1.4 U	1.4	0.55	1.1 U	1.1	0.42	1.2 U	1.2	0.46	1.3 U	1.3	0.51	1.6 U	1.6	0.61
o-Xylene	200,000	1.4 U	1.4	0.32	1.1 U	1.1	0.24	1.2 U	1.2	0.26	1.3 U	1.3	0.29	1.6 U	1.6	0.35
1,2-Dichlorobenzene	68,000	1.4 U	1.4	0.41	1.1 U	1.1	0.32	1.2 U	1.2	0.34	1.3 U	1.3	0.38	1.6 U	1.6	0.46
1,3-Dichlorobenzene	3,840	1.4 U	1.4	0.32	1.1 U	1.1	0.24	1.2 U	1.2	0.26	1.3 U	1.3	0.30	1.6 U	1.6	0.35
1,4-Dichlorobenzene	3,500	1.4 U	1.4	0.33	1.1 U	1.1	0.25	1.2 U	1.2	0.27	1.3 U	1.3	0.30	1.6 U	1.6	0.36
Acrolein	---	71 U	71	5.4	54 U	54	4.1	58 U	58	4.4	65 U	65	5.0	78 UJ	78	6.0
Methyl Iodide	---	1.4 U	1.4	0.30	1.1 U	1.1	0.23	1.2 U	1.2	0.25	1.3 U	1.3	0.28	1.6 U	1.6	0.34
Bromoethane	---	2.8 U	2.8	0.62	2.1 U	2.1	0.47	2.3 U	2.3	0.51	2.6 U	2.6	0.58	3.1 U	3.1	0.69
Acrylonitrile	---	7.1 U	7.1	1.5	5.4 U	5.4	1.1	5.8 U	5.8	1.2	6.5 U	6.5	1.3	7.8 U	7.8	1.6
1,1-Dichloropropene	---	1.4 U	1.4	0.44	1.1 U	1.1	0.34	1.2 U	1.2	0.36	1.3 U	1.3	0.41	1.6 U	1.6	0.49
Dibromomethane	---	1.4 U	1.4	0.21	1.1 U	1.1	0.16	1.2 U	1.2	0.17	1.3 U	1.3	0.19	1.6 U	1.6	0.23
1,1,1,2-Tetrachloroethane	---	1.4 U	1.4	0.33	1.1 U	1.1	0.25	1.2 U	1.2	0.27	1.3 U	1.3	0.30	1.6 U	1.6	0.36
1,2-Dibromo-3-chloropropane	---	7.1 U	7.1	0.83	5.4 U	5.4	0.63	5.8 U	5.8	0.68	6.5 U	6.5	0.77	7.8 U	7.8	0.92
1,2,3-Trichloropropane	---	2.8 U	2.8	0.73	2.1 U	2.1	0.56	2.3 U	2.3	0.60	2.6 U	2.6	0.68	3.1 U	3.1	0.81
trans-1,4-Dichloro-2-butene	---	7.1 U	7.1	0.62	5.4 U	5.4	0.47	5.8 U	5.8	0.51	6.5 U	6.5	0.57	7.8 U	7.8	0.68
1,3,5-Trimethylbenzene	800,000	1.4 U	1.4	0.36	1.1 U	1.1	0.27	1.2 U	1.2	0.30	1.3 U	1.3	0.33	1.6 U	1.6	0.40
1,2,4-Trimethylbenzene	800,000	1.4 U	1.4	0.32	1.1 U	1.1	0.25	1.2 U	1.2	0.27	1.3 U	1.3	0.30	1.6 U	1.6	0.36
Hexachlorobutadiene	---	7.1 U	7.1	0.58	5.4 U	5.4	0.44	5.8 U	5.8	0.48	6.5 U	6.5	0.54	7.8 U	7.8	0.64

TABLE M-3
MONITORING WELL BORINGS SOIL ANALYTICAL RESULTS
BOEING ISAACSON-THOMPSON
REMEDIAL INVESTIGATION

	Preliminary Cleanup Level	IT-MW-20(8-9.5) TW35I 11/09/2011			IT-MW-20(14.5-16) TW35J 11/09/2011			IT-MW-21(2-3.5) TW89D 11/11/2011			IT-MW-21(5-6.5) TW89E 11/11/2011			IT-MW-21(8-9.5) TW89F 11/11/2011		
		Result	Reporting Limit	Detection Limit	Result	Reporting Limit	Detection Limit	Result	Reporting Limit	Detection Limit	Result	Reporting Limit	Detection Limit	Result	Reporting Limit	Detection Limit
Ethylene Dibromide	---	1.4 U	1.4	0.25	1.1 U	1.1	0.19	1.2 U	1.2	0.21	1.3 U	1.3	0.23	1.6 U	1.6	0.28
Bromochloromethane	---	1.4 U	1.4	0.46	1.1 U	1.1	0.35	1.2 U	1.2	0.38	1.3 U	1.3	0.42	1.6 UJ	1.6	0.50
2,2-Dichloropropane	---	1.4 U	1.4	0.41	1.1 U	1.1	0.31	1.2 U	1.2	0.34	1.3 U	1.3	0.38	1.6 U	1.6	0.46
1,3-Dichloropropane	---	1.4 U	1.4	0.30	1.1 U	1.1	0.22	1.2 U	1.2	0.24	1.3 U	1.3	0.27	1.6 U	1.6	0.33
Isopropylbenzene	78,000	1.4 U	1.4	0.33	1.1 U	1.1	0.25	1.2 U	1.2	0.27	1.3 U	1.3	0.30	1.6 U	1.6	0.36
n-Propylbenzene	11,000	1.4 U	1.4	0.38	1.1 U	1.1	0.29	1.2 U	1.2	0.32	1.3 U	1.3	0.36	1.6 U	1.6	0.42
Bromobenzene	---	1.4 U	1.4	0.22	1.1 U	1.1	0.16	1.2 U	1.2	0.18	1.3 U	1.3	0.20	1.6 U	1.6	0.24
2-Chlorotoluene	---	1.4 U	1.4	0.42	1.1 U	1.1	0.32	1.2 U	1.2	0.35	1.3 U	1.3	0.39	1.6 U	1.6	0.47
4-Chlorotoluene	400,000	1.4 U	1.4	0.39	1.1 U	1.1	0.30	1.2 U	1.2	0.32	1.3 U	1.3	0.36	1.6 U	1.6	0.43
tert-Butylbenzene	---	1.4 U	1.4	0.43	1.1 U	1.1	0.33	1.2 U	1.2	0.36	1.3 U	1.3	0.40	1.6 U	1.6	0.48
sec-Butylbenzene	---	1.4 U	1.4	0.34	1.1 U	1.1	0.26	1.2 U	1.2	0.28	1.3 U	1.3	0.31	1.6 U	1.6	0.38
4-Isopropyltoluene	---	1.4 U	1.4	0.33	1.1 U	1.1	0.25	1.2 U	1.2	0.28	1.3 U	1.3	0.31	1.6 U	1.6	0.37
n-Butylbenzene	27,000	1.4 U	1.4	0.37	1.1 U	1.1	0.28	1.2 U	1.2	0.31	1.3 U	1.3	0.34	1.6 U	1.6	0.41
1,2,4-Trichlorobenzene	80	7.1 U	7.1	0.47	5.4 U	5.4	0.36	5.8 U	5.8	0.39	6.5 U	6.5	0.43	7.8 U	7.8	0.52
Naphthalene	2,100	7.1 U	7.1	0.61	5.4 U	5.4	0.46	5.8 U	5.8	0.50	6.5 U	6.5	0.56	7.8 U	7.8	0.67
1,2,3-Trichlorobenzene	---	7.1 U	7.1	0.43	5.4 U	5.4	0.33	5.8 U	5.8	0.36	6.5 U	6.5	0.40	7.8 U	7.8	0.48
SEMIVOLATILES (µg/kg)																
Method SW8270D																
Phenol	1,900,000	20 U	20	8.4	19 U	19	8.3	18 U	18	7.9	18 U	18	7.8	19 U	19	8.1
Bis-(2-Chloroethyl) Ether	---	20 U	20	3.3	19 U	19	3.2	18 U	18	3.1	18 U	18	3.0	19 U	19	3.1
2-Chlorophenol	---	20 U	20	2.3	19 U	19	2.3	18 U	18	2.2	18 U	18	2.2	19 U	19	2.2
1,3-Dichlorobenzene	3,840	20 U	20	2.6	19 U	19	2.5	18 U	18	2.4	18 U	18	2.4	19 U	19	2.5
1,4-Dichlorobenzene	3,500	20 U	20	2.8	19 U	19	2.8	18 U	18	2.6	18 U	18	2.6	19 U	19	2.7
Benzyl Alcohol	8,000,000	20 U	20	5.9	19 U	19	5.9	18 UJ	18	5.6	18 UJ	18	5.5	19 UJ	19	5.7
1,2-Dichlorobenzene	68,000	20 U	20	2.4	19 U	19	2.4	18 U	18	2.3	18 U	18	2.3	19 U	19	2.3
2-Methylphenol	250,000	20 U	20	5.1	19 U	19	5.0	18 U	18	4.8	18 U	18	4.8	19 U	19	4.9
2,2'-Oxybis(1-Chloropropane)	---	20 U	20	3.7	19 U	19	3.6	18 U	18	3.4	18 U	18	3.4	19 U	19	3.5
4-Methylphenol	41,000	39 U	39	6.4	38 U	38	6.4	37 U	37	6.1	36 U	36	6.0	**14** J1	38	6.2
N-Nitroso-Di-N-Propylamine	---	20 U	20	3.3	19 U	19	3.2	18 U	18	3.1	18 U	18	3.0	19 U	19	3.1
Hexachloroethane	---	20 U	20	2.9	19 U	19	2.8	18 U	18	2.7	18 U	18	2.7	19 U	19	2.8
Nitrobenzene	---	20 U	20	3.9	19 U	19	3.9	18 U	18	3.7	18 U	18	3.7	19 U	19	3.8
Isophorone	---	20 U	20	2.8	19 U	19	2.8	18 U	18	2.6	18 U	18	2.6	19 U	19	2.7
2-Nitrophenol	---	97 U	97	38	96 U	96	37	92 U	92	36	90 U	90	35	94 U	94	36
2,4-Dimethylphenol	95,000	39 U	39	3.4	38 U	38	3.3	37 UJ	37	3.2	36 U	36	3.1	38 U	38	3.2
Benzoic Acid	9,000	390 U	390	98	380 U	380	97	370 U	370	93	360 U	360	91	380 U	380	95
bis(2-Chloroethoxy) Methane	---	20 U	20	1.9	19 U	19	1.9	18 U	18	1.8	18 U	18	1.8	19 U	19	1.9
2,4-Dichlorophenol	---	200 U	200	21	190 U	190	21	180 U	180	20	180 U	180	19	190 U	190	20
1,2,4-Trichlorobenzene	80	20 U	20	3.4	19 U	19	3.3	18 U	18	3.2	18 U	18	3.1	19 U	19	3.3
Naphthalene	2,100	20 U	20	2.7	19 U	19	2.7	**13** J1	18	2.5	**27**	18	2.5	**17** J1	19	2.6
4-Chloroaniline	---	260 U	260	22	260 U	260	21	250 UJ	250	20	240 U	240	20	250 U	250	21
Hexachlorobutadiene	---	97 U	97	4.4	96 U	96	4.4	92 U	92	4.2	90 U	90	4.1	94 U	94	4.3
4-Chloro-3-methylphenol	740,000	97 U	97	15	96 U	96	15	92 U	92	14	90 U	90	14	94 U	94	14
2-Methylnaphthalene	320,000	20 U	20	3.0	19 U	19	2.9	**10** J1	18	2.8	**48**	18	2.8	19 U	19	2.9
Hexachlorocyclopentadiene	---	390 U	390	65	380 U	380	64	370 UJ	370	61	360 U	360	60	380 U	380	62
2,4,6-Trichlorophenol	---	97 U	97	22	96 U	96	22	92 U	92	21	90 U	90	20	94 U	94	21
2,4,5-Trichlorophenol	---	97 U	97	21	96 U	96	21	92 U	92	20	90 U	90	19	94 U	94	20
2-Chloronaphthalene	---	20 U	20	2.6	19 U	19	2.5	18 U	18	2.4	18 U	18	2.4	19 U	19	2.5
2-Nitroaniline	---	97 U	97	18	96 U	96	18	92 U	92	17	90 U	90	17	94 U	94	17
Dimethylphthalate	71	20 U	20	2.8	19 U	19	2.8	18 U	18	2.7	18 U	18	2.6	19 U	19	2.7
Acenaphthylene	---	20 U	20	5.6	19 U	19	5.5	18 U	18	5.2	18 U	18	5.2	19 U	19	5.4
3-Nitroaniline	---	97 U	97	22	96 U	96	22	92 U	92	21	90 U	90	20	94 U	94	21
Acenaphthene	230,000	20 U	20	3.2	19 U	19	3.2	18 U	18	3.0	18 U	18	3.0	19 U	19	3.1
2,4-Dinitrophenol	---	830 U	830	110	820 U	820	110	780 U	780	100	770 U	770	100	800 U	800	100
4-Nitrophenol	---	97 U	97	34	96 U	96	33	92 U	92	32	90 U	90	31	94 U	94	33
Dibenzofuran	80,000	20 U	20	4.0	19 U	19	3.9	18 U	18	3.8	**15** J1	18	3.7	19 U	19	3.8
2,6-Dinitrotoluene	---	97 U	97	30	96 U	96	29	92 U	92	28	90 U	90	28	94 U	94	29

TABLE M-3
MONITORING WELL BORINGS SOIL ANALYTICAL RESULTS
BOEING ISAACSON-THOMPSON
REMEDIAL INVESTIGATION

	Preliminary Cleanup Level	IT-MW-20(8-9.5) TW35I 11/09/2011			IT-MW-20(14.5-16) TW35J 11/09/2011			IT-MW-21(2-3.5) TW89D 11/11/2011			IT-MW-21(5-6.5) TW89E 11/11/2011			IT-MW-21(8-9.5) TW89F 11/11/2011		
		Result	Reporting Limit	Detection Limit	Result	Reporting Limit	Detection Limit	Result	Reporting Limit	Detection Limit	Result	Reporting Limit	Detection Limit	Result	Reporting Limit	Detection Limit
2,4-Dinitrotoluene	---	97 U	97	19	96 U	96	19	92 U	92	18	90 U	90	18	94 U	94	18
Diethylphthalate	178,000	49 U	49	36	48 U	48	35	46 U	46	34	45 U	45	33	47 U	47	34
4-Chlorophenyl-phenylether	---	20 U	20	5.1	19 U	19	5.1	18 U	18	4.9	18 U	18	4.8	19 U	19	5.0
Fluorene	150,000	20 U	20	4.2	19 U	19	4.2	18 U	18	4.0	18 U	18	3.9	19 U	19	4.1
4-Nitroaniline	---	97 U	97	37	96 U	96	36	92 U	92	35	90 U	90	34	94 U	94	36
4,6-Dinitro-2-Methylphenol	---	200 U	200	21	190 U	190	20	180 U	180	19	180 U	180	19	190 U	190	20
N-Nitrosodiphenylamine	204,000	20 U	20	5.2	19 U	19	5.2	18 U	18	4.9	18 U	18	4.9	19 U	19	5.1
4-Bromophenyl-phenylether	---	20 U	20	4.9	19 U	19	4.8	18 U	18	4.6	18 U	18	4.6	19 U	19	4.7
Hexachlorobenzene	---	20 U	20	4.2	19 U	19	4.1	18 U	18	3.9	18 U	18	3.9	19 U	19	4.0
Pentachlorophenol	---	200 U	200	47	190 U	190	47	180 U	180	44	180 U	180	44	190 U	190	45
Phenanthrene	---	20 U	20	3.5	19 U	19	3.5	**16** J1	18	3.3	**47**	18	3.3	**14** J1	19	3.4
Carbazole	50,000	20 UJ	20	2.6	19 UJ	19	2.6	18 U	18	2.5	18 U	18	2.4	19 U	19	2.5
Anthracene	1,600,000	20 U	20	4.4	19 U	19	4.3	18 U	18	4.1	18 U	18	4.1	19 U	19	4.2
Di-n-Butylphthalate	26,000	20 U	20	7.9	19 U	19	7.8	18 U	18	7.5	18 U	18	7.4	19 U	19	7.6
Fluoranthene	230,000	20 U	20	2.8	19 U	19	2.8	18 U	18	2.7	**20**	18	2.6	**14** J1	19	2.7
Pyrene	240,000	20 U	20	1.9	19 U	19	1.9	18 U	18	1.8	**19**	18	1.8	**17** J1	19	1.8
Butylbenzylphthalate	1,700	20 U	20	6.0	19 U	19	5.9	18 U	18	5.6	18 U	18	5.6	19 U	19	5.8
3,3'-Dichlorobenzidine	---	150 U	150	17	140 U	140	17	140 UJ	140	16	140 UJ	140	16	140 UJ	140	17
Benzo(a)anthracene	---	20 U	20	3.2	19 U	19	3.2	18 U	18	3.0	**14** J1	18	3.0	**12** J1	19	3.1
bis(2-Ethylhexyl)phthalate	56,600	24 U	24	14	24 U	24	14	24 U	23	13	23 U	23	13	21 UJ2	23	14
Chrysene	---	20 U	20	3.6	19 U	19	3.6	**20**	18	3.4	**21**	18	3.4	**15** J1	19	3.5
Di-n-Octyl phthalate	---	20 U	20	5.7	19 U	19	5.6	18 U	18	5.4	18 U	18	5.3	19 U	19	5.5
Benzo(a)pyrene	---	20 U	20	5.3	19 U	19	5.2	18 U	18	5.0	**13** J1	18	4.9	**15** J1	19	5.1
Indeno(1,2,3-cd)pyrene	---	20 U	20	4.6	19 U	19	4.5	18 U	18	4.3	18 U	18	4.2	19 U	19	4.4
Dibenz(a,h)anthracene	---	20 U	20	4.2	19 U	19	4.1	18 U	18	4.0	18 U	18	3.9	19 U	19	4.0
Benzo(g,h,i)perylene	---	20 U	20	4.3	19 U	19	4.2	18 U	18	4.0	18 U	18	4.0	**12** J1	19	4.1
1-Methylnaphthalene	16,000	20 U	20	2.6	19 U	19	2.6	18 U	18	2.5	**38**	18	2.4	19 U	19	2.5
Total Benzofluoranthenes	---	20 U	20	2.7	19 U	19	2.6	**12** J1	18	2.5	**17** J1	18	2.5	**21**	19	2.6
cPAH TEQ	15	ND	NA	NA	ND	NA	NA	**1.4** J	NA	NA	**16** J	NA	NA	**18** J	NA	NA
PAHs (µg/kg)																
Method SW8270D-SIM																
Naphthalene	2,100	4.0 U	4.0	2.1	4.9 U	4.9	2.6	**8.0**	4.5	2.4	**35**	4.4	2.3	**13**	4.6	2.4
2-Methylnaphthalene	320,000	4.0 U	4.0	1.2	4.9 U	4.9	1.5	**8.9**	4.5	1.4	**57**	4.4	1.3	**4.9**	4.6	1.4
1-Methylnaphthalene	16,000	4.0 U	4.0	1.4	4.9 U	4.9	1.7	**6.3**	4.5	1.6	**61**	4.4	1.5	**4.3** J1	4.6	1.6
Total Naphthalenes	---	4.0 U	NA	NA	4.9 U	NA	NA	**23.2**	NA	NA	**153**	NA	NA	**22.2** J1	NA	NA
Acenaphthylene	---	4.0 U	4.0	1.0	4.9 U	4.9	1.2	4.5 U	4.5	1.1	4.4 U	4.4	1.1	4.6 U	4.6	1.2
Acenaphthene	230,000	4.0 U	4.0	1.1	4.9 U	4.9	1.3	4.5 U	4.5	1.2	4.4 U	4.4	1.2	4.6 U	4.6	1.2
Fluorene	150,000	4.0 U	4.0	1.0	4.9 U	4.9	1.3	4.5 U	4.5	1.2	**3.8** J1	4.4	1.1	4.6 U	4.6	1.2
Phenanthrene	---	**3.3** J1	4.0	1.6	4.9 U	4.9	1.9	**10**	4.5	1.8	**85**	4.4	1.7	**14**	4.6	1.8
Anthracene	1,600,000	4.0 U	4.0	1.2	4.9 U	4.9	1.4	4.5 U	4.5	1.3	**12**	4.4	1.3	4.6 U	4.6	1.4
Fluoranthene	230,000	4.0 U	4.0	1.4	4.9 U	4.9	1.7	**8.5**	4.5	1.6	**32**	4.4	1.5	**7.8**	4.6	1.6
Pyrene	240,000	4.0 U	4.0	1.8	4.9 U	4.9	2.2	**9.8**	4.5	2.0	**27**	4.4	1.9	**7.0**	4.6	2.1
Benzo(a)anthracene	---	4.0 U	4.0	1.3	4.9 U	4.9	1.6	**6.3**	4.5	1.5	**14**	4.4	1.4	**4.0** J1	4.6	1.5
Chrysene	---	4.0 U	4.0	1.5	4.9 U	4.9	1.8	**16**	4.5	1.7	**26**	4.4	1.6	**7.3**	4.6	1.7
Benzo(a)pyrene	---	4.0 U	4.0	1.4	4.9 U	4.9	1.7	**8.2**	4.5	1.6	**20**	4.4	1.5	**6.2**	4.6	1.6
Indeno(1,2,3-cd)pyrene	---	4.0 U	4.0	2.8	4.9 U	4.9	3.4	**6.5**	4.5	3.1	**6.9**	4.4	3	**3.6** J1	4.6	3.2
Dibenz(a,h)anthracene	---	4.0 U	4.0	1.9	4.9 U	4.9	2.3	**2.8** J1	4.5	2.2	**3.4** J1	4.4	2.1	4.6 U	4.6	2.2
Benzo(g,h,i)perylene	---	4.0 U	4.0	2.4	4.9 U	4.9	3.0	**10**	4.5	2.8	**10**	4.4	2.7	**6.0**	4.6	2.8
Dibenzofuran	80,000	4.0 U	4.0	1.2	4.9 U	4.9	1.5	**2.5** J1	4.5	1.4	**24**	4.4	1.3	**3.2** J1	4.6	1.4
Total Benzofluoranthenes	---	4.0 U	4.0	1.5	4.9 U	4.9	1.8	**15**	4.5	1.7	**17**	4.4	1.6	**10**	4.6	1.7
cPAH TEQ	15	ND	NA	NA	ND	NA	NA	**11** J	NA	NA	**24** J	NA	NA	**8.0** J	NA	NA

TABLE M-3
MONITORING WELL BORINGS SOIL ANALYTICAL RESULTS
BOEING ISAACSON-THOMPSON
REMEDIAL INVESTIGATION

	Preliminary Cleanup Level	IT-MW-20(8-9.5) TW35I 11/09/2011			IT-MW-20(14.5-16) TW35J 11/09/2011			IT-MW-21(2-3.5) TW89D 11/11/2011			IT-MW-21(5-6.5) TW89E 11/11/2011			IT-MW-21(8-9.5) TW89F 11/11/2011		
		Result	Reporting Limit	Detection Limit	Result	Reporting Limit	Detection Limit	Result	Reporting Limit	Detection Limit	Result	Reporting Limit	Detection Limit	Result	Reporting Limit	Detection Limit
PCBs (µg/kg)																
Method SW8082																
Aroclor 1016	0.72	32 UJ	32	1.9	32 U	32	1.9	32 U	32	1.9	32 U	32	1.9	33 U	33	2.0
Aroclor 1242	0.72	32 UJ	32	2.3	32 U	32	2.4	32 U	32	2.3	32 U	32	2.4	33 U	33	2.4
Aroclor 1248	220	32 UJ	32	2.3	32 U	32	2.4	32 U	32	2.3	32 U	32	2.4	33 U	33	2.4
Aroclor 1254	0.29	32 UJ	32	2.3	32 U	32	2.4	32 U	32	2.3	32 U	32	2.4	33 U	33	2.4
Aroclor 1260	5.4	32 UJ	32	2.3	32 U	32	2.4	32 U	32	2.3	32 U	32	2.4	33 U	33	2.4
Aroclor 1221	---	32 UJ	32	2.3	32 U	32	2.4	32 U	32	2.3	32 U	32	2.4	33 U	33	2.4
Aroclor 1232	---	32 UJ	32	2.3	32 U	32	2.4	32 U	32	2.3	32 U	32	2.4	33 U	33	2.4
Total PCBs	1.8	ND	NA	NA	ND	NA	NA	ND	NA	NA	ND	NA	NA	ND	NA	NA
TOTAL PETROLEUM HYDROCARBONS (mg/kg)																
NWTPH-Dx																
Diesel-Range Organics	2,000	6.8 U	6.8	1.7	6.4 U	6.4	1.6	**21** J	5.3	1.4	**18** J	5.8	1.5	6.4 U	6.4	1.6
Motor Oil-Range Organics	2,000	14 U	14	2.1	13 U	13	2.0	**100**	11	1.7	**41**	12	1.8	13 U	13	2.0
NWTPH-G																
Gasoline-Range Organics	100/30	11 U	11	5.3	7.5 U	7.5	3.6	7.7 U	7.7	3.7	8.2 U	8.2	3.9	8.2 U	8.2	3.9
TOTAL METALS (mg/kg)																
Methods 200.8/7471A/SW7196A																
Antimony	5	0.3 U	0.3	0.017	0.2 U	0.2	0.016	**0.6**	0.2	0.014	0.2 U	0.2	0.015	0.3 U	0.3	0.017
Arsenic	7	**5.5**	0.3	0.12	**10.5**	0.2	0.11	**36.6**	0.2	0.090	**36.5**	0.2	0.099	**139**	0.3	0.11
Barium	640	**67.1**	0.7	0.075	**31.7**	0.6	0.069	**67.3**	0.5	0.058	**52.0**	0.6	0.064	**66.3**	0.6	0.072
Beryllium	160	**0.3**	0.3	0.024	0.2 U	0.2	0.022	0.2 U	0.2	0.019	**0.3**	0.2	0.020	0.3 U	0.3	0.023
Cadmium	1.3	0.1 U	0.1	0.016	0.1 U	0.1	0.015	**2.1**	0.1	0.012	**0.3**	0.1	0.014	**0.2**	0.1	0.015
Chromium	1,480	**17.1**	0.7	0.051	**11.8**	0.6	0.047	**100**	0.5	0.039	**15.1**	0.6	0.043	**15.4**	0.6	0.049
Chromium VI	3.8	0.528 U	0.528	0.030	0.486 U	0.486	0.030	**0.461**	0.419	0.030	0.458 U	0.458	0.030	0.517 U	0.517	0.030
Copper	36	**22.3**	0.7	0.048	**12.8**	0.6	0.044	**65.7**	0.5	0.037	**21.8**	0.6	0.041	**668**	3	0.23
Lead	250	**5.2**	0.1	0.063	**3.9**	0.1	0.058	**112**	0.1	0.049	**14.4**	0.1	0.053	**9.1**	0.1	0.060
Mercury	1.5	**0.06**	0.03	0.0015	0.02 U	0.02	0.0012	**0.18**	0.03	0.0013	**0.11**	0.02	0.0011	**0.07**	0.03	0.0016
Nickel	210	**13.8**	0.7	0.065	**6.0**	0.6	0.060	**22.8**	0.5	0.051	**11.3**	0.6	0.056	**14.3**	0.6	0.063
Selenium	1.0	0.7 U	0.7	0.13	0.6 U	0.6	0.12	0.5 U	0.5	0.1	0.6 U	0.6	0.11	0.6 U	0.6	0.13
Silver	170	0.3 U	0.3	0.011	0.2 U	0.2	0.0098	**0.2**	0.2	0.0083	0.2 U	0.2	0.0091	0.3 U	0.3	0.010
Thallium	0.67	0.3 U	0.3	0.0040	0.2 U	0.2	0.0037	0.2 U	0.2	0.0031	0.2 U	0.2	0.0034	0.3 U	0.3	0.0039
Zinc	1,400	**37**	5	0.45	**26**	5	0.42	**295**	4	0.35	**58**	5	0.39	**63**	5	0.44

TABLE M-3
MONITORING WELL BORINGS SOIL ANALYTICAL RESULTS
BOEING ISAACSON-THOMPSON
REMEDIAL INVESTIGATION

	Preliminary Cleanup Level	IT-MW-21(13.5-15) TW89G 11/11/2011			IT-MW-21(17-18.5) TW89H 11/11/2011			IT-MW-21(24.5-26) TW89M 11/11/2011			IT-MW-22(2-3.5) TW89I 11/11/2011			IT-MW-22(5-6.5) TW89J 11/11/2011		
		Result	Reporting Limit	Detection Limit	Result	Reporting Limit	Detection Limit	Result	Reporting Limit	Detection Limit	Result	Reporting Limit	Detection Limit	Result	Reporting Limit	Detection Limit
VOLATILES (µg/kg)																
Method SW8260C																
Chloromethane	1,600	1.4 U	1.4	0.37	1.2 U	1.2	0.31	1.3 U	1.3	0.33	1.3 U	1.3	0.34	1.3 U	1.3	0.34
Bromomethane	---	1.4 UJ	1.4	0.26	1.2 UJ	1.2	0.22	1.3 UJ	1.3	0.24	1.3 UJ	1.3	0.24	1.3 UJ	1.3	0.24
Vinyl Chloride	7.4	1.4 U	1.4	0.33	1.2 U	1.2	0.28	1.3 U	1.3	0.30	1.3 U	1.3	0.31	1.3 U	1.3	0.30
Chloroethane	280,000	1.4 U	1.4	0.65	1.2 U	1.2	0.55	1.3 U	1.3	0.58	1.3 U	1.3	0.60	1.3 U	1.3	0.60
Methylene Chloride	2400	**9.4**	2.8	0.89	**7.7**	2.4	0.75	**2.5** J1	2.5	0.80	**5.4**	2.6	0.83	**1.6** J1	2.6	0.82
Acetone	510,000	**21** J	7.0	0.67	**24** J	5.9	0.57	**20** J	6.3	0.61	**25** J	6.5	0.63	**18** J	6.5	0.62
Carbon Disulfide	75,000	**2.4**	1.4	0.78	**2.1**	1.2	0.66	**4.5**	1.3	0.71	**2.6**	1.3	0.73	**2.8**	1.3	0.72
1,1-Dichloroethene	81	1.4 U	1.4	0.47	1.2 U	1.2	0.40	1.3 U	1.3	0.42	1.3 U	1.3	0.44	1.3 U	1.3	0.44
1,1-Dichloroethane	710	1.4 U	1.4	0.28	1.2 U	1.2	0.24	1.3 U	1.3	0.26	1.3 U	1.3	0.27	1.3 U	1.3	0.26
trans-1,2-Dichloroethene	19,000	1.4 UJ	1.4	0.37	1.2 UJ	1.2	0.32	1.3 UJ	1.3	0.34	1.3 UJ	1.3	0.35	1.3 UJ	1.3	0.34
cis-1,2-Dichloroethene	2,600	1.4 U	1.4	0.34	1.2 U	1.2	0.28	1.3 U	1.3	0.30	1.3 U	1.3	0.31	1.3 U	1.3	0.31
Chloroform	200	1.4 U	1.4	0.33	1.2 U	1.2	0.28	1.3 U	1.3	0.30	1.3 U	1.3	0.31	1.3 U	1.3	0.30
1,2-Dichloroethane	70	1.4 U	1.4	0.27	1.2 U	1.2	0.23	1.3 U	1.3	0.24	1.3 U	1.3	0.25	1.3 U	1.3	0.25
2-Butanone	430,000	7.0 U	7.0	0.72	5.9 U	5.9	0.61	6.3 U	6.3	0.65	**3.7** J1	6.5	0.67	6.5 U	6.5	0.66
1,1,1-Trichloroethane	1,900,000	1.4 U	1.4	0.32	1.2 U	1.2	0.27	1.3 U	1.3	0.29	1.3 U	1.3	0.30	1.3 U	1.3	0.29
Carbon Tetrachloride	21	1.4 U	1.4	0.30	1.2 U	1.2	0.25	1.3 U	1.3	0.27	1.3 U	1.3	0.28	1.3 U	1.3	0.28
Vinyl Acetate	---	7.0 U	7.0	0.53	5.9 U	5.9	0.45	6.3 U	6.3	0.48	6.5 U	6.5	0.50	6.5 U	6.5	0.49
Bromodichloromethane	89	1.4 U	1.4	0.35	1.2 U	1.2	0.30	1.3 U	1.3	0.32	1.3 U	1.3	0.33	1.3 U	1.3	0.33
1,2-Dichloropropane	92	1.4 U	1.4	0.23	1.2 U	1.2	0.19	1.3 U	1.3	0.20	1.3 U	1.3	0.21	1.3 U	1.3	0.21
cis-1,3-Dichloropropene	---	1.4 U	1.4	0.32	1.2 U	1.2	0.27	1.3 U	1.3	0.29	1.3 U	1.3	0.30	1.3 U	1.3	0.29
Trichloroethene	51	**1.0** J1	1.4	0.30	**1.0** J1	1.2	0.25	**1.4**	1.3	0.27	**1.5**	1.3	0.28	**0.9** J1	1.3	0.27
Dibromochloromethane	---	1.4 U	1.4	0.37	1.2 U	1.2	0.32	1.3 U	1.3	0.34	1.3 U	1.3	0.35	1.3 U	1.3	0.34
1,1,2-Trichloroethane	73	1.4 U	1.4	0.40	1.2 U	1.2	0.34	1.3 U	1.3	0.36	1.3 U	1.3	0.37	1.3 U	1.3	0.37
Benzene	93	1.4 U	1.4	0.41	**0.7** J1	1.2	0.35	1.3 U	1.3	0.37	**1.6**	1.3	0.39	1.3 U	1.3	0.38
trans-1,3-Dichloropropene	---	1.4 U	1.4	0.30	1.2 U	1.2	0.26	1.3 U	1.3	0.27	1.3 U	1.3	0.28	1.3 U	1.3	0.28
2-Chloroethylvinylether	---	7.0 U	7.0	0.39	5.9 U	5.9	0.33	6.3 U	6.3	0.35	6.5 U	6.5	0.36	6.5 U	6.5	0.36
Bromoform	---	1.4 U	1.4	0.41	1.2 U	1.2	0.35	1.3 U	1.3	0.38	1.3 U	1.3	0.39	1.3 U	1.3	0.38
4-Methyl-2-Pentanone (MIBK)	170,000	7.0 U	7.0	0.59	5.9 U	5.9	0.50	6.3 U	6.3	0.53	6.5 U	6.5	0.55	6.5 U	6.5	0.54
2-Hexanone	32,000	7.0 U	7.0	0.61	5.9 U	5.9	0.52	6.3 U	6.3	0.55	6.5 U	6.5	0.57	6.5 U	6.5	0.57
Tetrachloroethene	260	1.4 U	1.4	0.36	1.2 U	1.2	0.30	1.3 U	1.3	0.32	1.3 U	1.3	0.34	1.3 U	1.3	0.33
1,1,2,2-Tetrachloroethane	13	1.4 U	1.4	0.35	1.2 U	1.2	0.30	1.3 U	1.3	0.32	1.3 U	1.3	0.33	1.3 U	1.3	0.33
Toluene	100,000	1.4 U	1.4	0.21	1.2 U	1.2	0.18	1.3 U	1.3	0.19	**1.9**	1.3	0.20	1.3 U	1.3	0.20
Chlorobenzene	26,000	1.4 U	1.4	0.31	1.2 U	1.2	0.26	1.3 U	1.3	0.28	1.3 U	1.3	0.29	1.3 U	1.3	0.28
Ethylbenzene	230	1.4 U	1.4	0.28	1.2 U	1.2	0.24	1.3 U	1.3	0.26	1.3 U	1.3	0.26	1.3 U	1.3	0.26
Styrene	16,000,000	1.4 U	1.4	0.19	1.2 U	1.2	0.16	1.3 U	1.3	0.17	**0.8** J1	1.3	0.18	1.3 U	1.3	0.18
Trichlorofluoromethane	200,000	1.4 U	1.4	0.37	1.2 U	1.2	0.32	1.3 U	1.3	0.34	1.3 U	1.3	0.35	1.3 U	1.3	0.34
1,1,2-Trichloro-1,2,2-trifuoroethane	1,000,000,000	2.8 U	2.8	0.40	2.4 U	2.4	0.34	2.5 U	2.5	0.36	2.6 U	2.6	0.38	2.6 U	2.6	0.37
m,p-Xylene	160,000	1.4 U	1.4	0.55	1.2 U	1.2	0.46	1.3 U	1.3	0.49	**1.2** J1	1.3	0.51	1.3 U	1.3	0.51
o-Xylene	200,000	1.4 U	1.4	0.31	1.2 U	1.2	0.27	1.3 U	1.3	0.28	**0.7** J1	1.3	0.29	1.3 U	1.3	0.29
1,2-Dichlorobenzene	68,000	1.4 U	1.4	0.41	1.2 U	1.2	0.35	1.3 U	1.3	0.37	1.3 U	1.3	0.38	1.3 U	1.3	0.38
1,3-Dichlorobenzene	3,840	1.4 U	1.4	0.32	1.2 U	1.2	0.27	1.3 U	1.3	0.29	1.3 U	1.3	0.30	1.3 U	1.3	0.29
1,4-Dichlorobenzene	3,500	1.4 U	1.4	0.32	1.2 U	1.2	0.27	1.3 U	1.3	0.29	1.3 U	1.3	0.30	1.3 U	1.3	0.30
Acrolein	---	70 UJ	70	5.3	59 UJ	59	4.5	63 UJ	63	4.8	65 UJ	65	5.0	65 UJ	65	4.9
Methyl Iodide	---	1.4 U	1.4	0.30	1.2 U	1.2	0.25	1.3 U	1.3	0.27	1.3 U	1.3	0.28	1.3 U	1.3	0.28
Bromoethane	---	2.8 U	2.8	0.61	2.4 U	2.4	0.52	2.5 U	2.5	0.56	2.6 U	2.6	0.58	2.6 U	2.6	0.57
Acrylonitrile	---	7.0 U	7.0	1.4	5.9 U	5.9	1.2	6.3 U	6.3	1.3	6.5 U	6.5	1.3	6.5 U	6.5	1.3
1,1-Dichloropropene	---	1.4 U	1.4	0.44	1.2 U	1.2	0.37	1.3 U	1.3	0.39	1.3 U	1.3	0.41	1.3 U	1.3	0.40
Dibromomethane	---	1.4 U	1.4	0.21	1.2 U	1.2	0.17	1.3 U	1.3	0.19	1.3 U	1.3	0.19	1.3 U	1.3	0.19
1,1,1,2-Tetrachloroethane	---	1.4 U	1.4	0.33	1.2 U	1.2	0.28	1.3 U	1.3	0.29	1.3 U	1.3	0.30	1.3 U	1.3	0.30
1,2-Dibromo-3-chloropropane	---	7.0 U	7.0	0.82	5.9 U	5.9	0.69	6.3 U	6.3	0.74	6.5 U	6.5	0.77	6.5 U	6.5	0.76
1,2,3-Trichloropropane	---	2.8 U	2.8	0.72	2.4 U	2.4	0.61	2.5 U	2.5	0.65	2.6 U	2.6	0.68	2.6 U	2.6	0.67
trans-1,4-Dichloro-2-butene	---	7.0 U	7.0	0.61	5.9 U	5.9	0.52	6.3 U	6.3	0.55	6.5 U	6.5	0.57	6.5 U	6.5	0.57
1,3,5-Trimethylbenzene	800,000	1.4 U	1.4	0.35	1.2 U	1.2	0.30	1.3 U	1.3	0.32	1.3 U	1.3	0.33	1.3 U	1.3	0.33
1,2,4-Trimethylbenzene	800,000	1.4 U	1.4	0.32	1.2 U	1.2	0.27	1.3 U	1.3	0.29	1.3 U	1.3	0.30	1.3 U	1.3	0.30
Hexachlorobutadiene	---	7.0 U	7.0	0.57	5.9 U	5.9	0.49	6.3 U	6.3	0.52	6.5 U	6.5	0.54	6.5 U	6.5	0.53

TABLE M-3
MONITORING WELL BORINGS SOIL ANALYTICAL RESULTS
BOEING ISAACSON-THOMPSON
REMEDIAL INVESTIGATION

	Preliminary Cleanup Level	IT-MW-21(13.5-15) TW89G 11/11/2011			IT-MW-21(17-18.5) TW89H 11/11/2011			IT-MW-21(24.5-26) TW89M 11/11/2011			IT-MW-22(2-3.5) TW89I 11/11/2011			IT-MW-22(5-6.5) TW89J 11/11/2011		
		Result	Reporting Limit	Detection Limit	Result	Reporting Limit	Detection Limit	Result	Reporting Limit	Detection Limit	Result	Reporting Limit	Detection Limit	Result	Reporting Limit	Detection Limit
Ethylene Dibromide	---	1.4 U	1.4	0.25	1.2 U	1.2	0.21	1.3 U	1.3	0.22	1.3 U	1.3	0.23	1.3 U	1.3	0.23
Bromochloromethane	---	1.4 UJ	1.4	0.45	1.2 UJ	1.2	0.38	1.3 UJ	1.3	0.41	1.3 UJ	1.3	0.42	1.3 UJ	1.3	0.42
2,2-Dichloropropane	---	1.4 U	1.4	0.41	1.2 U	1.2	0.35	1.3 U	1.3	0.37	1.3 U	1.3	0.38	1.3 U	1.3	0.38
1,3-Dichloropropane	---	1.4 U	1.4	0.29	1.2 U	1.2	0.25	1.3 U	1.3	0.26	1.3 U	1.3	0.27	1.3 U	1.3	0.27
Isopropylbenzene	78,000	1.4 U	1.4	0.33	1.2 U	1.2	0.28	1.3 U	1.3	0.29	1.3 U	1.3	0.30	1.3 U	1.3	0.30
n-Propylbenzene	11,000	1.4 U	1.4	0.38	1.2 U	1.2	0.32	1.3 U	1.3	0.34	1.3 U	1.3	0.36	1.3 U	1.3	0.35
Bromobenzene	---	1.4 U	1.4	0.21	1.2 U	1.2	0.18	1.3 U	1.3	0.19	1.3 U	1.3	0.20	1.3 U	1.3	0.20
2-Chlorotoluene	---	1.4 U	1.4	0.42	1.2 U	1.2	0.36	1.3 U	1.3	0.38	1.3 U	1.3	0.39	1.3 U	1.3	0.39
4-Chlorotoluene	400,000	1.4 U	1.4	0.39	1.2 U	1.2	0.33	1.3 U	1.3	0.35	1.3 U	1.3	0.36	1.3 U	1.3	0.36
tert-Butylbenzene	---	1.4 U	1.4	0.43	1.2 U	1.2	0.36	1.3 U	1.3	0.39	1.3 U	1.3	0.40	1.3 U	1.3	0.40
sec-Butylbenzene	---	1.4 U	1.4	0.34	1.2 U	1.2	0.28	1.3 U	1.3	0.30	1.3 U	1.3	0.31	1.3 U	1.3	0.31
4-Isopropyltoluene	---	1.4 U	1.4	0.33	1.2 U	1.2	0.28	1.3 U	1.3	0.30	1.3 U	1.3	0.31	1.3 U	1.3	0.31
n-Butylbenzene	27,000	1.4 U	1.4	0.37	1.2 U	1.2	0.31	1.3 U	1.3	0.33	1.3 U	1.3	0.34	1.3 U	1.3	0.34
1,2,4-Trichlorobenzene	80	7.0 U	7.0	0.46	5.9 U	5.9	0.39	6.3 U	6.3	0.42	6.5 U	6.5	0.43	6.5 U	6.5	0.43
Naphthalene	2,100	7.0 U	7.0	0.60	5.9 U	5.9	0.51	6.3 U	6.3	0.54	6.5 U	6.5	0.56	6.5 U	6.5	0.56
1,2,3-Trichlorobenzene	---	7.0 U	7.0	0.43	5.9 U	5.9	0.36	6.3 U	6.3	0.39	6.5 U	6.5	0.40	6.5 U	6.5	0.40
SEMIVOLATILES (µg/kg)																
Method SW8270D																
Phenol	1,900,000	19 U	19	8.1	19 U	19	8.1	NA	NA	NA	19 U	19	8.2	19 U	19	8.3
Bis-(2-Chloroethyl) Ether	---	19 U	19	3.1	19 U	19	3.1	NA	NA	NA	19 U	19	3.2	19 U	19	3.2
2-Chlorophenol	---	19 U	19	2.2	19 U	19	2.2	NA	NA	NA	19 U	19	2.3	19 U	19	2.3
1,3-Dichlorobenzene	3,840	19 U	19	2.4	19 U	19	2.5	NA	NA	NA	19 U	19	2.5	19 U	19	2.5
1,4-Dichlorobenzene	3,500	19 U	19	2.7	19 U	19	2.7	NA	NA	NA	19 U	19	2.7	19 U	19	2.8
Benzyl Alcohol	8,000,000	19 UJ	19	5.7	19 UJ	19	5.7	NA	NA	NA	19 UJ	19	5.8	19 UJ	19	5.9
1,2-Dichlorobenzene	68,000	19 U	19	2.3	19 U	19	2.3	NA	NA	NA	19 U	19	2.4	19 U	19	2.4
2-Methylphenol	250,000	19 U	19	4.9	19 U	19	4.9	NA	NA	NA	19 U	19	5.0	19 U	19	5.1
2,2'-Oxybis(1-Chloropropane)	---	19 U	19	3.5	19 U	19	3.5	NA	NA	NA	19 U	19	3.6	19 U	19	3.6
4-Methylphenol	41,000	37 U	37	6.2	38 U	38	6.2	NA	NA	NA	38 U	38	6.3	**23** J1	38	6.4
N-Nitroso-Di-N-Propylamine	---	19 U	19	3.1	19 U	19	3.1	NA	NA	NA	19 U	19	3.2	19 U	19	3.2
Hexachloroethane	---	19 U	19	2.7	19 U	19	2.8	NA	NA	NA	19 U	19	2.8	19 U	19	2.8
Nitrobenzene	---	19 U	19	3.8	19 U	19	3.8	NA	NA	NA	19 U	19	3.8	19 U	19	3.9
Isophorone	---	19 U	19	2.7	19 U	19	2.7	NA	NA	NA	19 U	19	2.7	19 U	19	2.8
2-Nitrophenol	---	93 U	93	36	94 U	94	36	NA	NA	NA	95 U	95	37	96 U	96	37
2,4-Dimethylphenol	95,000	37 U	37	3.2	38 U	38	3.2	NA	NA	NA	38 U	38	3.3	38 U	38	3.3
Benzoic Acid	9,000	370 U	370	94	380 U	380	95	NA	NA	NA	380 U	380	96	380 U	380	97
bis(2-Chloroethoxy) Methane	---	19 U	19	1.9	19 U	19	1.9	NA	NA	NA	19 U	19	1.9	19 U	19	1.9
2,4-Dichlorophenol	---	190 U	190	20	190 U	190	20	NA	NA	NA	190 U	190	20	190 U	190	21
1,2,4-Trichlorobenzene	80	19 U	19	3.2	19 U	19	3.3	NA	NA	NA	19 U	19	3.3	19 U	19	3.4
Naphthalene	2,100	19 U	19	2.6	19 U	19	2.6	NA	NA	NA	19 U	19	2.6	**55**	19	2.7
4-Chloroaniline	---	250 U	250	21	250 U	250	21	NA	NA	NA	260 U	260	21	260 U	260	21
Hexachlorobutadiene	---	93 U	93	4.3	94 U	94	4.3	NA	NA	NA	95 U	95	4.3	96 U	96	4.4
4-Chloro-3-methylphenol	740,000	93 U	93	14	94 U	94	14	NA	NA	NA	95 U	95	14	96 U	96	15
2-Methylnaphthalene	320,000	19 U	19	2.8	19 U	19	2.9	NA	NA	NA	19 U	19	2.9	**35**	19	2.9
Hexachlorocyclopentadiene	---	370 U	370	62	380 U	380	62	NA	NA	NA	380 U	380	63	380 U	380	64
2,4,6-Trichlorophenol	---	93 U	93	21	94 U	94	21	NA	NA	NA	95 U	95	21	96 U	96	22
2,4,5-Trichlorophenol	---	93 U	93	20	94 U	94	20	NA	NA	NA	95 U	95	20	96 U	96	21
2-Chloronaphthalene	---	19 U	19	2.5	19 U	19	2.5	NA	NA	NA	19 U	19	2.5	19 U	19	2.5
2-Nitroaniline	---	93 U	93	17	94 U	94	17	NA	NA	NA	95 U	95	17	96 U	96	18
Dimethylphthalate	71	19 U	19	2.7	19 U	19	2.7	NA	NA	NA	19 U	19	2.7	19 U	19	2.8
Acenaphthylene	---	19 U	19	5.3	19 U	19	5.3	NA	NA	NA	19 U	19	5.4	**11** J1	19	5.5
3-Nitroaniline	---	93 U	93	21	94 U	94	21	NA	NA	NA	95 U	95	21	96 U	96	22
Acenaphthene	230,000	19 U	19	3.1	19 U	19	3.1	NA	NA	NA	19 U	19	3.1	**19**	19	3.2
2,4-Dinitrophenol	---	790 U	790	100	800 U	800	100	NA	NA	NA	800 U	800	110	820 U	820	110
4-Nitrophenol	---	93 U	93	32	94 U	94	32	NA	NA	NA	95 U	95	33	96 U	96	33
Dibenzofuran	80,000	19 U	19	3.8	19 U	19	3.8	NA	NA	NA	19 U	19	3.9	**19**	19	3.9
2,6-Dinitrotoluene	---	93 U	93	28	94 U	94	29	NA	NA	NA	95 U	95	29	96 U	96	29

TABLE M-3
MONITORING WELL BORINGS SOIL ANALYTICAL RESULTS
BOEING ISAACSON-THOMPSON
REMEDIAL INVESTIGATION

	Preliminary Cleanup Level	IT-MW-21(13.5-15) TW89G 11/11/2011			IT-MW-21(17-18.5) TW89H 11/11/2011			IT-MW-21(24.5-26) TW89M 11/11/2011			IT-MW-22(2-3.5) TW89I 11/11/2011			IT-MW-22(5-6.5) TW89J 11/11/2011		
		Result	Reporting Limit	Detection Limit	Result	Reporting Limit	Detection Limit	Result	Reporting Limit	Detection Limit	Result	Reporting Limit	Detection Limit	Result	Reporting Limit	Detection Limit
2,4-Dinitrotoluene	---	93 U	93	18	94 U	94	18	NA	NA	NA	95 U	95	18	96 U	96	19
Diethylphthalate	178,000	47 U	47	34	47 U	47	34	NA	NA	NA	47 U	47	35	48 U	48	35
4-Chlorophenyl-phenylether	---	19 U	19	4.9	19 U	19	5.0	NA	NA	NA	19 U	19	5.0	19 U	19	5.1
Fluorene	150,000	19 U	19	4.1	19 U	19	4.1	NA	NA	NA	19 U	19	4.1	**21**	19	4.2
4-Nitroaniline	---	93 U	93	35	94 U	94	35	NA	NA	NA	95 U	95	36	96 U	96	37
4,6-Dinitro-2-Methylphenol	---	190 U	190	20	190 U	190	20	NA	NA	NA	190 U	190	20	190 U	190	20
N-Nitrosodiphenylamine	204,000	19 U	19	5.0	19 U	19	5	NA	NA	NA	19 U	19	5.1	19 U	19	5.2
4-Bromophenyl-phenylether	---	19 U	19	4.7	19 U	19	4.7	NA	NA	NA	19 U	19	4.8	19 U	19	4.8
Hexachlorobenzene	---	19 U	19	4.0	19 U	19	4.0	NA	NA	NA	19 U	19	4.1	19 U	19	4.1
Pentachlorophenol	---	190 U	190	45	190 U	190	45	NA	NA	NA	190 U	190	46	190 U	190	47
Phenanthrene	---	19 U	19	3.4	19 U	19	3.4	NA	NA	NA	**15** J1	19	3.4	**66**	19	3.5
Carbazole	50,000	19 U	19	2.5	19 U	19	2.5	NA	NA	NA	19 U	19	2.5	19 U	19	2.6
Anthracene	1,600,000	19 U	19	4.2	19 U	19	4.2	NA	NA	NA	19 U	19	4.3	**16** J1	19	4.3
Di-n-Butylphthalate	26,000	19 U	19	7.6	19 U	19	7.6	NA	NA	NA	19 U	19	7.7	19 U	19	7.9
Fluoranthene	230,000	19 U	19	2.7	**22**	19	2.7	NA	NA	NA	19 U	19	2.8	**60**	19	2.8
Pyrene	240,000	19 U	19	1.8	**17** J1	19	1.8	NA	NA	NA	**16** J1	19	1.8	**68**	19	1.9
Butylbenzylphthalate	1,700	19 U	19	5.7	19 U	19	5.7	NA	NA	NA	19 U	19	5.8	19 U	19	5.9
3,3'-Dichlorobenzidine	---	140 UJ	140	17	140 UJ	140	17	NA	NA	NA	140 UJ	140	17	140 UJ	140	17
Benzo(a)anthracene	---	19 U	19	3.1	19 U	19	3.1	NA	NA	NA	19 U	19	3.1	**21**	19	3.2
bis(2-Ethylhexyl)phthalate	56,600	42 U	23	14	26 U	23	14	NA	NA	NA	34 U	24	14	26 U	24	14
Chrysene	---	19 U	19	3.5	19 U	19	3.5	NA	NA	NA	**44**	19	3.6	**23**	19	3.6
Di-n-Octyl phthalate	---	19 U	19	5.4	19 U	19	5.5	NA	NA	NA	19 U	19	5.5	19 U	19	5.6
Benzo(a)pyrene	---	19 U	19	5.1	19 U	19	5.1	NA	NA	NA	**14** J1	19	5.2	19 U	19	5.3
Indeno(1,2,3-cd)pyrene	---	19 U	19	4.4	19 U	19	4.4	NA	NA	NA	19 U	19	4.4	19 U	19	4.5
Dibenz(a,h)anthracene	---	19 U	19	4.0	19 U	19	4.0	NA	NA	NA	19 U	19	4.1	19 U	19	4.2
Benzo(g,h,i)perylene	---	19 U	19	4.1	19 U	19	4.1	NA	NA	NA	19 U	19	4.2	19 U	19	4.2
1-Methylnaphthalene	16,000	19 U	19	2.5	19 U	19	2.5	NA	NA	NA	19 U	19	2.5	**26**	19	2.6
Total Benzofluoranthenes	---	19 U	19	2.6	19 U	19	2.6	NA	NA	NA	**26**	19	2.6	**32**	19	2.6
cPAH TEQ	15	ND	NA	NA	ND	NA	NA	NA	NA	NA	**17** J	NA	NA	**5.5**	NA	NA
PAHs (µg/kg)																
Method SW8270D-SIM																
Naphthalene	2,100	4.6 U	4.6	2.4	4.5 U	4.5	2.4	NA	NA	NA	4.7 U	4.7	2.5	**69**	4.6	2.4
2-Methylnaphthalene	320,000	4.6 U	4.6	1.4	4.5 U	4.5	1.4	NA	NA	NA	**2.9** J1	4.7	1.4	**35**	4.6	1.4
1-Methylnaphthalene	16,000	4.6 U	4.6	1.6	4.5 U	4.5	1.5	NA	NA	NA	**3.0** J1	4.7	1.6	**10**	4.6	1.6
Total Naphthalenes	---	4.6 U	NA	NA	4.5 U	NA	NA	NA	NA	NA	**5.9** J1	NA	NA	**114**	NA	NA
Acenaphthylene	---	4.6 U	4.6	1.2	4.5 U	4.5	1.1	NA	NA	NA	4.7 U	4.7	1.2	**22**	4.6	1.2
Acenaphthene	230,000	4.6 U	4.6	1.2	4.5 U	4.5	1.2	NA	NA	NA	4.7 U	4.7	1.2	**29**	4.6	1.2
Fluorene	150,000	4.6 U	4.6	1.2	4.5 U	4.5	1.2	NA	NA	NA	4.7 U	4.7	1.2	**26**	4.6	1.2
Phenanthrene	---	4.6 U	4.6	1.8	4.5 U	4.5	1.8	NA	NA	NA	**11**	4.7	1.9	**93**	4.6	1.8
Anthracene	1,600,000	4.6 U	4.6	1.4	4.5 U	4.5	1.3	NA	NA	NA	4.7 U	4.7	1.4	**21**	4.6	1.3
Fluoranthene	230,000	4.6 U	4.6	1.6	4.5 U	4.5	1.6	NA	NA	NA	**8.4**	4.7	1.7	**120**	4.6	1.6
Pyrene	240,000	4.6 U	4.6	2.1	4.5 U	4.5	2.0	NA	NA	NA	**11**	4.7	2.1	**100**	4.6	2.0
Benzo(a)anthracene	---	4.6 U	4.6	1.5	4.5 U	4.5	1.4	NA	NA	NA	**5.5**	4.7	1.5	**28**	4.6	1.5
Chrysene	---	4.6 U	4.6	1.7	4.5 U	4.5	1.7	NA	NA	NA	**33**	4.7	1.8	**34**	4.6	1.7
Benzo(a)pyrene	---	4.6 U	4.6	1.6	4.5 U	4.5	1.6	NA	NA	NA	**11**	4.7	1.6	**26**	4.6	1.6
Indeno(1,2,3-cd)pyrene	---	4.6 U	4.6	3.2	4.5 U	4.5	3.1	NA	NA	NA	**5.0**	4.7	3.2	**16**	4.6	3.2
Dibenz(a,h)anthracene	---	4.6 U	4.6	2.2	4.5 U	4.5	2.1	NA	NA	NA	4.7 U	4.7	2.2	**5.0**	4.6	2.2
Benzo(g,h,i)perylene	---	4.6 U	4.6	2.8	4.5 U	4.5	2.7	NA	NA	NA	**13**	4.7	2.9	**19**	4.6	2.8
Dibenzofuran	80,000	4.6 U	4.6	1.4	4.5 U	4.5	1.4	NA	NA	NA	4.7 U	4.7	1.4	**26**	4.6	1.4
Total Benzofluoranthenes	---	4.6 U	4.6	1.7	4.5 U	4.5	1.7	NA	NA	NA	**14**	4.7	1.7	**41**	4.6	1.7
cPAH TEQ	15	ND	NA	NA	ND	NA	NA	NA	NA	NA	**13.8**	NA	NA	**34.8**	NA	NA

TABLE M-3
MONITORING WELL BORINGS SOIL ANALYTICAL RESULTS
BOEING ISAACSON-THOMPSON
REMEDIAL INVESTIGATION

	Preliminary Cleanup Level	IT-MW-21(13.5-15) TW89G 11/11/2011			IT-MW-21(17-18.5) TW89H 11/11/2011			IT-MW-21(24.5-26) TW89M 11/11/2011			IT-MW-22(2-3.5) TW89I 11/11/2011			IT-MW-22(5-6.5) TW89J 11/11/2011		
		Result	Reporting Limit	Detection Limit	Result	Reporting Limit	Detection Limit	Result	Reporting Limit	Detection Limit	Result	Reporting Limit	Detection Limit	Result	Reporting Limit	Detection Limit
PCBs (µg/kg)																
Method SW8082																
Aroclor 1016	0.72	31 U	31	1.9	32 U	32	2.0	NA	NA	NA	32 U	32	2.0	32 U	32	1.9
Aroclor 1242	0.72	31 U	31	2.3	32 U	32	2.4	NA	NA	NA	32 U	32	2.4	32 U	32	2.4
Aroclor 1248	220	31 U	31	2.3	32 U	32	2.4	NA	NA	NA	32 U	32	2.4	32 U	32	2.4
Aroclor 1254	0.29	31 U	31	2.3	32 U	32	2.4	NA	NA	NA	32 U	32	2.4	32 U	32	2.4
Aroclor 1260	5.4	31 U	31	2.3	32 U	32	2.4	NA	NA	NA	32 U	32	2.4	32 U	32	2.4
Aroclor 1221	---	31 U	31	2.3	32 U	32	2.4	NA	NA	NA	32 U	32	2.4	32 U	32	2.4
Aroclor 1232	---	31 U	31	2.3	32 U	32	2.4	NA	NA	NA	32 U	32	2.4	32 U	32	2.4
Total PCBs	1.8	ND	NA	NA	ND	NA	NA	NA	NA	NA	ND	NA	NA	ND	NA	NA
TOTAL PETROLEUM HYDROCARBONS (mg/kg)																
NWTPH-Dx																
Diesel-Range Organics	2,000	5.8 U	5.8	1.5	5.6 U	5.6	1.4	NA	NA	NA	**64** J	5.6	1.4	**13** J	6.9	1.8
Motor Oil-Range Organics	2,000	12 U	12	1.8	11 U	11	1.8	NA	NA	NA	**220**	11	1.8	**25**	14	2.2
NWTPH-G																
Gasoline-Range Organics	100/30	7.6 U	7.6	3.6	6.4 U	6.4	3.1	8.2 U	8.2	3.9	7.6 U	7.6	3.6	9.4 U	9.4	4.5
TOTAL METALS (mg/kg)																
Methods 200.8/7471A/SW7196A																
Antimony	5	0.2 U	0.2	0.015	0.2 U	0.2	0.015	NA	NA	NA	0.2 U	0.2	0.014	0.3 U	0.3	0.018
Arsenic	7	**221**	0.2	0.10	**12.6**	0.2	0.10	NA	NA	NA	**3.0**	0.2	0.095	**56.4**	0.3	0.12
Barium	640	**28.7**	0.6	0.066	**23.3**	0.6	0.066	NA	NA	NA	**26.6**	0.5	0.061	**67.3**	0.7	0.076
Beryllium	160	0.2 U	0.2	0.021	0.2 U	0.2	0.021	NA	NA	NA	0.2 U	0.2	0.020	**0.4**	0.1	0.024
Cadmium	1.3	0.1 U	0.1	0.014	0.1 U	0.1	0.014	NA	NA	NA	0.1 U	0.1	0.013	**0.7**	0.1	0.016
Chromium	1,480	**10.2**	0.6	0.045	**10.6**	0.6	0.045	NA	NA	NA	**15.6**	0.5	0.042	**24**	3	0.26
Chromium VI	3.8	0.490 U	0.490	0.030	0.500 U	0.500	0.030	NA	NA	NA	0.438 U	0.438	0.030	0.547 U	0.547	0.030
Copper	36	**183**	0.6	0.042	**11.4**	0.6	0.043	NA	NA	NA	**14.3**	0.5	0.039	**28.8**	0.7	0.049
Lead	250	**2.3**	0.1	0.055	**1.0**	0.1	0.056	NA	NA	NA	**4.1**	0.1	0.051	**12.2**	0.1	0.064
Mercury	1.5	**0.03**	0.03	0.0013	0.03 U	0.03	0.0015	NA	NA	NA	0.02 U	0.02	0.0012	**0.14**	0.03	0.0014
Nickel	210	**8.0**	0.6	0.058	**7.1**	0.6	0.058	NA	NA	NA	**9.0**	0.5	0.054	**17.2**	0.7	0.066
Selenium	1.0	0.6 U	0.6	0.12	0.6 U	0.6	0.12	NA	NA	NA	0.5 U	0.5	0.11	0.7 U	0.7	0.13
Silver	170	0.2 U	0.2	0.0094	0.2 U	0.2	0.0095	NA	NA	NA	0.2 U	0.2	0.0087	0.3 U	0.3	0.011
Thallium	0.67	0.2 U	0.2	0.0035	0.2 U	0.2	0.0035	NA	NA	NA	0.2 U	0.2	0.0033	0.3 U	0.3	0.0041
Zinc	1,400	**99**	5	0.40	**26**	5	0.40	NA	NA	NA	**26**	4	0.37	**62**	5	0.46

TABLE M-3
MONITORING WELL BORINGS SOIL ANALYTICAL RESULTS
BOEING ISAACSON-THOMPSON
REMEDIAL INVESTIGATION

	Preliminary Cleanup Level	IT-MW-22(8-9.5) TW89K 11/11/2011			IT-MW-22(13.5-15) TW89L 11/11/2011			IT-MW-23(11-12.5) TW35A 11/09/2011			IT-MW-23(12.5-14) TW35B 11/09/2011			IT-MW-24(12.5-14) TX01D 11/14/2011		
		Result	Reporting Limit	Detection Limit	Result	Reporting Limit	Detection Limit	Result	Reporting Limit	Detection Limit	Result	Reporting Limit	Detection Limit	Result	Reporting Limit	Detection Limit
VOLATILES (µg/kg)																
Method SW8260C																
Chloromethane	1,600	1.5 U	1.5	0.38	1.0 U	1.0	0.26	1.2 U	1.2	0.32	**1.2** J1	1.2	0.32	1.2 UJ	1.2	0.32
Bromomethane	---	1.5 UJ	1.5	0.27	1.0 UJ	1.0	0.19	1.2 UJ	1.2	0.23	1.2 UJ	1.2	0.23	1.2 UJ	1.2	0.23
Vinyl Chloride	7.4	1.5 U	1.5	0.34	1.0 U	1.0	0.23	1.2 U	1.2	0.28	1.2 U	1.2	0.29	1.2 U	1.2	0.29
Chloroethane	280,000	1.5 U	1.5	0.67	1.0 U	1.0	0.46	1.2 U	1.2	0.56	1.2 U	1.2	0.56	1.2 UJ	1.2	0.57
Methylene Chloride	2400	**2.1** J1	2.9	0.92	**1.9** J1	2.0	0.63	**2.2** J, J1	2.4	0.77	**2.4** J1	2.4	0.77	**1.4** J, J1	2.5	0.78
Acetone	510,000	**44** J	7.3	0.70	**19** J	5.0	0.48	**1600**	390	360	**370**	6.1	0.58	**420** J	6.1	0.59
Carbon Disulfide	75,000	**1.3** J1	1.5	0.81	**3.9**	1.0	0.56	**1.6**	1.2	0.68	**1.6**	1.2	0.68	1.2 U	1.2	0.69
1,1-Dichloroethene	81	1.5 U	1.5	0.49	1.0 U	1.0	0.33	1.2 U	1.2	0.41	1.2 U	1.2	0.41	1.2 U	1.2	0.41
1,1-Dichloroethane	710	1.5 U	1.5	0.30	1.0 U	1.0	0.20	1.2 U	1.2	0.25	1.2 U	1.2	0.25	1.2 UJ	1.2	0.25
trans-1,2-Dichloroethene	19,000	1.5 UJ	1.5	0.39	1.0 UJ	1.0	0.26	1.2 U	1.2	0.32	1.2 U	1.2	0.32	1.2 U	1.2	0.33
cis-1,2-Dichloroethene	2,600	1.5 U	1.5	0.35	1.0 U	1.0	0.24	1.2 U	1.2	0.29	1.2 U	1.2	0.29	1.2 U	1.2	0.29
Chloroform	200	1.5 U	1.5	0.34	1.0 U	1.0	0.23	1.2 U	1.2	0.28	1.2 U	1.2	0.28	1.2 U	1.2	0.29
1,2-Dichloroethane	70	1.5 U	1.5	0.28	1.0 U	1.0	0.19	1.2 U	1.2	0.23	1.2 U	1.2	0.23	1.2 U	1.2	0.23
2-Butanone	430,000	**6.1** J1	7.3	0.75	5.0 U	5.0	0.51	**130**	6.1	0.62	**82**	6.1	0.62	**32**	6.1	0.63
1,1,1-Trichloroethane	1,900,000	1.5 U	1.5	0.33	1.0 U	1.0	0.22	1.2 U	1.2	0.27	1.2 U	1.2	0.27	1.2 U	1.2	0.28
Carbon Tetrachloride	21	1.5 U	1.5	0.31	1.0 U	1.0	0.21	1.2 U	1.2	0.26	1.2 U	1.2	0.26	1.2 U	1.2	0.26
Vinyl Acetate	---	7.3 U	7.3	0.55	5.0 U	5.0	0.38	6.1 U	6.1	0.46	6.1 U	6.1	0.46	6.1 U	6.1	0.47
Bromodichloromethane	89	1.5 U	1.5	0.37	1.0 U	1.0	0.25	1.2 U	1.2	0.31	1.2 U	1.2	0.31	1.2 U	1.2	0.31
1,2-Dichloropropane	92	1.5 U	1.5	0.24	1.0 U	1.0	0.16	1.2 U	1.2	0.20	1.2 U	1.2	0.20	1.2 U	1.2	0.20
cis-1,3-Dichloropropene	---	1.5 U	1.5	0.33	1.0 U	1.0	0.22	1.2 U	1.2	0.27	1.2 U	1.2	0.27	1.2 U	1.2	0.28
Trichloroethene	51	**1.7**	1.5	0.31	1.0 U	1.0	0.21	1.2 U	1.2	0.26	1.2 U	1.2	0.26	**2.1**	1.2	0.26
Dibromochloromethane	---	1.5 U	1.5	0.39	1.0 U	1.0	0.26	1.2 U	1.2	0.32	1.2 U	1.2	0.32	1.2 U	1.2	0.33
1,1,2-Trichloroethane	73	1.5 U	1.5	0.42	1.0 U	1.0	0.28	1.2 U	1.2	0.35	1.2 U	1.2	0.35	1.2 U	1.2	0.35
Benzene	93	**0.8** J1	1.5	0.43	1.0 U	1.0	0.29	**0.8** J1	1.2	0.36	**0.8** J1	1.2	0.36	**1.3**	1.2	0.36
trans-1,3-Dichloropropene	---	1.5 U	1.5	0.31	1.0 U	1.0	0.21	1.2 U	1.2	0.26	1.2 U	1.2	0.26	1.2 U	1.2	0.27
2-Chloroethylvinylether	---	7.3 U	7.3	0.40	5.0 U	5.0	0.27	6.1 U	6.1	0.33	6.1 U	6.1	0.33	6.1 U	6.1	0.34
Bromoform	---	1.5 U	1.5	0.43	1.0 U	1.0	0.30	1.2 U	1.2	0.36	1.2 U	1.2	0.36	1.2 U	1.2	0.36
4-Methyl-2-Pentanone (MIBK)	170,000	7.3 U	7.3	0.61	5.0 U	5.0	0.42	6.1 U	6.1	0.51	6.1 U	6.1	0.51	6.1 U	6.1	0.52
2-Hexanone	32,000	7.3 U	7.3	0.64	5.0 U	5.0	0.44	6.1 U	6.1	0.53	6.1 U	6.1	0.53	6.1 U	6.1	0.54
Tetrachloroethene	260	1.5 U	1.5	0.37	1.0 U	1.0	0.26	1.2 U	1.2	0.31	1.2 U	1.2	0.31	1.2 U	1.2	0.32
1,1,2,2-Tetrachloroethane	13	1.5 U	1.5	0.37	1.0 U	1.0	0.25	1.2 U	1.2	0.31	1.2 U	1.2	0.31	1.2 U	1.2	0.31
Toluene	100,000	1.5 U	1.5	0.22	1.0 U	1.0	0.15	**1.0** J1	1.2	0.18	**1.1** J1	1.2	0.18	**0.8** J1	1.2	0.19
Chlorobenzene	26,000	1.5 U	1.5	0.32	1.0 U	1.0	0.22	1.2 U	1.2	0.27	1.2 U	1.2	0.27	1.2 U	1.2	0.27
Ethylbenzene	230	1.5 U	1.5	0.29	1.0 U	1.0	0.20	1.2 U	1.2	0.24	1.2 U	1.2	0.25	1.2 U	1.2	0.25
Styrene	16,000,000	1.5 U	1.5	0.20	1.0 U	1.0	0.14	1.2 U	1.2	0.17	1.2 U	1.2	0.17	1.2 U	1.2	0.17
Trichlorofluoromethane	200,000	1.5 U	1.5	0.39	1.0 U	1.0	0.26	1.2 U	1.2	0.32	1.2 U	1.2	0.32	**2.1** J	1.2	0.33
1,1,2-Trichloro-1,2,2-trifuoroethane	1,000,000,000	2.9 U	2.9	0.42	2.0 U	2.0	0.29	2.4 U	2.4	0.35	2.4 U	2.4	0.35	2.5 U	2.5	0.35
m,p-Xylene	160,000	1.5 U	1.5	0.57	1.0 U	1.0	0.39	1.2 U	1.2	0.47	1.2 U	1.2	0.48	1.2 U	1.2	0.48
o-Xylene	200,000	1.5 U	1.5	0.33	1.0 U	1.0	0.22	1.2 U	1.2	0.27	1.2 U	1.2	0.27	1.2 U	1.2	0.28
1,2-Dichlorobenzene	68,000	1.5 U	1.5	0.43	1.0 U	1.0	0.29	1.2 U	1.2	0.35	1.2 U	1.2	0.36	1.2 U	1.2	0.36
1,3-Dichlorobenzene	3,840	1.5 U	1.5	0.33	1.0 U	1.0	0.23	1.2 U	1.2	0.27	1.2 U	1.2	0.28	1.2 U	1.2	0.28
1,4-Dichlorobenzene	3,500	1.5 U	1.5	0.34	1.0 U	1.0	0.23	1.2 U	1.2	0.28	1.2 U	1.2	0.28	1.2 U	1.2	0.29
Acrolein	---	73 UJ	73	5.5	50 UJ	50	3.8	61 U	61	4.6	61 U	61	4.6	61 UJ	61	4.7
Methyl Iodide	---	**6.3**	1.5	0.31	1.0 U	1.0	0.21	1.2 U	1.2	0.26	1.2 U	1.2	0.26	1.2 U	1.2	0.26
Bromoethane	---	2.9 U	2.9	0.64	2.0 U	2.0	0.44	2.4 U	2.4	0.53	2.4 U	2.4	0.53	2.5 U	2.5	0.54
Acrylonitrile	---	7.3 U	7.3	1.5	5.0 U	5.0	1.0	6.1 U	6.1	1.2	6.1 U	6.1	1.2	6.1 U	6.1	1.3
1,1-Dichloropropene	---	1.5 U	1.5	0.45	1.0 U	1.0	0.31	1.2 U	1.2	0.38	1.2 U	1.2	0.38	1.2 U	1.2	0.38
Dibromomethane	---	1.5 U	1.5	0.21	1.0 U	1.0	0.15	1.2 U	1.2	0.18	1.2 U	1.2	0.18	1.2 U	1.2	0.18
1,1,1,2-Tetrachloroethane	---	1.5 U	1.5	0.34	1.0 U	1.0	0.23	1.2 U	1.2	0.28	1.2 U	1.2	0.28	1.2 U	1.2	0.29
1,2-Dibromo-3-chloropropane	---	7.3 U	7.3	0.85	5.0 U	5.0	0.58	6.1 U	6.1	0.71	6.1 U	6.1	0.71	6.1 U	6.1	0.72
1,2,3-Trichloropropane	---	2.9 U	2.9	0.75	2.0 U	2.0	0.51	2.4 U	2.4	0.63	2.4 U	2.4	0.63	2.5 U	2.5	0.64
trans-1,4-Dichloro-2-butene	---	7.3 U	7.3	0.64	5.0 U	5.0	0.43	6.1 U	6.1	0.53	6.1 U	6.1	0.53	6.1 U	6.1	0.54
1,3,5-Trimethylbenzene	800,000	1.5 U	1.5	0.37	1.0 U	1.0	0.25	**0.7** J1	1.2	0.31	**0.7** J1	1.2	0.31	1.2 U	1.2	0.31
1,2,4-Trimethylbenzene	800,000	1.5 U	1.5	0.33	1.0 U	1.0	0.23	**1.1** J1	1.2	0.28	**1.0** J1	1.2	0.28	1.2 U	1.2	0.28
Hexachlorobutadiene	---	7.3 U	7.3	0.60	5.0 U	5.0	0.41	6.1 U	6.1	0.50	6.1 U	6.1	0.50	6.1 U	6.1	0.50

TABLE M-3
MONITORING WELL BORINGS SOIL ANALYTICAL RESULTS
BOEING ISAACSON-THOMPSON
REMEDIAL INVESTIGATION

	Preliminary Cleanup Level	IT-MW-22(8-9.5) TW89K 11/11/2011			IT-MW-22(13.5-15) TW89L 11/11/2011			IT-MW-23(11-12.5) TW35A 11/09/2011			IT-MW-23(12.5-14) TW35B 11/09/2011			IT-MW-24(12.5-14) TX01D 11/14/2011		
		Result	Reporting Limit	Detection Limit	Result	Reporting Limit	Detection Limit	Result	Reporting Limit	Detection Limit	Result	Reporting Limit	Detection Limit	Result	Reporting Limit	Detection Limit
Ethylene Dibromide	---	1.5 U	1.5	0.26	1.0 U	1.0	0.17	1.2 U	1.2	0.21	1.2 U	1.2	0.21	1.2 U	1.2	0.22
Bromochloromethane	---	1.5 UJ	1.5	0.47	1.0 UJ	1.0	0.32	1.2 U	1.2	0.39	1.2 U	1.2	0.39	1.2 U	1.2	0.40
2,2-Dichloropropane	---	1.5 U	1.5	0.42	1.0 U	1.0	0.29	1.2 U	1.2	0.35	1.2 U	1.2	0.35	1.2 U	1.2	0.36
1,3-Dichloropropane	---	1.5 U	1.5	0.3	1.0 U	1.0	0.21	1.2 U	1.2	0.25	1.2 U	1.2	0.25	1.2 U	1.2	0.26
Isopropylbenzene	78,000	1.5 U	1.5	0.34	1.0 U	1.0	0.23	1.2 U	1.2	0.28	1.2 U	1.2	0.28	1.2 U	1.2	0.29
n-Propylbenzene	11,000	1.5 U	1.5	0.40	1.0 U	1.0	0.27	1.2 U	1.2	0.33	1.2 U	1.2	0.33	1.2 U	1.2	0.33
Bromobenzene	---	1.5 U	1.5	0.22	1.0 U	1.0	0.15	1.2 U	1.2	0.19	1.2 U	1.2	0.19	1.2 U	1.2	0.19
2-Chlorotoluene	---	1.5 U	1.5	0.44	1.0 U	1.0	0.30	1.2 U	1.2	0.36	1.2 U	1.2	0.36	1.2 U	1.2	0.37
4-Chlorotoluene	400,000	1.5 U	1.5	0.40	1.0 U	1.0	0.28	1.2 U	1.2	0.34	1.2 U	1.2	0.34	1.2 U	1.2	0.34
tert-Butylbenzene	---	1.5 U	1.5	0.44	1.0 U	1.0	0.30	1.2 U	1.2	0.37	1.2 U	1.2	0.37	1.2 U	1.2	0.38
sec-Butylbenzene	---	1.5 U	1.5	0.35	1.0 U	1.0	0.24	1.2 U	1.2	0.29	1.2 U	1.2	0.29	1.2 U	1.2	0.29
4-Isopropyltoluene	---	1.5 U	1.5	0.34	1.0 U	1.0	0.23	**1.9** J	1.2	0.29	**2.9** J	1.2	0.29	1.2 U	1.2	0.29
n-Butylbenzene	27,000	1.5 U	1.5	0.38	1.0 U	1.0	0.26	1.2 U	1.2	0.32	1.2 U	1.2	0.32	1.2 U	1.2	0.32
1,2,4-Trichlorobenzene	80	7.3 U	7.3	0.48	5.0 U	5.0	0.33	6.1 U	6.1	0.40	6.1 U	6.1	0.40	6.1 U	6.1	0.41
Naphthalene	2,100	7.3 U	7.3	0.62	5.0 U	5.0	0.43	6.1 U	6.1	0.52	6.1 U	6.1	0.52	6.1 U	6.1	0.53
1,2,3-Trichlorobenzene	---	7.3 U	7.3	0.44	5.0 U	5.0	0.30	6.1 U	6.1	0.37	6.1 U	6.1	0.37	6.1 U	6.1	0.37
SEMIVOLATILES (µg/kg)																
Method SW8270D																
Phenol	1,900,000	18 U	18	8.0	19 U	19	8.3	**28**	19	8.1	**210**	19	8.4	20 U	20	8.5
Bis-(2-Chloroethyl) Ether	---	18 U	18	3.1	19 U	19	3.2	19 U	19	3.1	19 U	19	3.3	20 U	20	3.3
2-Chlorophenol	---	18 U	18	2.2	19 U	19	2.3	19 U	19	2.2	19 U	19	2.3	20 U	20	2.4
1,3-Dichlorobenzene	3,840	18 U	18	2.4	19 U	19	2.5	19 U	19	2.5	19 U	19	2.6	20 U	20	2.6
1,4-Dichlorobenzene	3,500	18 U	18	2.6	19 U	19	2.7	19 U	19	2.7	19 U	19	2.8	20 U	20	2.8
Benzyl Alcohol	8,000,000	18 UJ	18	5.6	19 UJ	19	5.8	19 U	19	5.7	19 U	19	5.9	20 U	20	6.0
1,2-Dichlorobenzene	68,000	18 U	18	2.3	19 U	19	2.4	19 U	19	2.3	19 U	19	2.4	20 U	20	2.5
2-Methylphenol	250,000	18 U	18	4.9	19 U	19	5.0	19 U	19	4.9	19 U	19	5.1	20 U	20	5.2
2,2'-Oxybis(1-Chloropropane)	---	18 U	18	3.5	19 U	19	3.6	19 U	19	3.5	19 U	19	3.7	20 U	20	3.7
4-Methylphenol	41,000	**34** J1	37	6.1	38 U	38	6.3	**20** J1	38	6.2	**81**	39	6.4	40 U	40	6.5
N-Nitroso-Di-N-Propylamine	---	18 U	18	3.1	19 U	19	3.2	19 U	19	3.1	19 U	19	3.3	20 U	20	3.3
Hexachloroethane	---	18 U	18	2.7	19 U	19	2.8	19 U	19	2.8	19 U	19	2.9	20 U	20	2.9
Nitrobenzene	---	18 U	18	3.8	19 U	19	3.9	19 U	19	3.8	19 U	19	3.9	20 U	20	4.0
Isophorone	---	18 U	18	2.6	19 U	19	2.7	19 U	19	2.7	19 U	19	2.8	20 U	20	2.8
2-Nitrophenol	---	93 U	93	36	96 U	96	37	94 U	94	36	97 U	97	38	99 U	99	38
2,4-Dimethylphenol	95,000	37 U	37	3.2	38 U	38	3.3	38 U	38	3.2	39 U	39	3.4	40 U	40	3.4
Benzoic Acid	9,000	370 U	370	94	380 U	380	97	380 U	380	95	390 U	390	98	400 U	400	100
bis(2-Chloroethoxy) Methane	---	18 U	18	1.9	19 U	19	1.9	19 U	19	1.9	19 U	19	1.9	20 U	20	2.0
2,4-Dichlorophenol	---	180 U	180	20	190 U	190	21	190 U	190	20	190 U	190	21	200 U	200	21
1,2,4-Trichlorobenzene	80	18 U	18	3.2	19 U	19	3.3	19 U	19	3.3	19 U	19	3.4	20 U	20	3.4
Naphthalene	2,100	**17** J1	18	2.6	19 U	19	2.6	19 U	19	2.6	19 U	19	2.7	20 U	20	2.7
4-Chloroaniline	---	250 U	250	21	260 U	260	21	250 U	250	21	260 U	260	22	270 U	270	22
Hexachlorobutadiene	---	93 U	93	4.2	96 U	96	4.4	94 U	94	4.3	97 U	97	4.4	99 U	99	4.5
4-Chloro-3-methylphenol	740,000	93 U	93	14	96 U	96	14	94 U	94	14	97 U	97	15	99 U	99	15
2-Methylnaphthalene	320,000	18 U	18	2.8	19 U	19	2.9	19 U	19	2.9	19 U	19	3.0	20 U	20	3.0
Hexachlorocyclopentadiene	---	370 U	370	61	380 U	380	63	380 U	380	62	390 U	390	65	400 U	400	66
2,4,6-Trichlorophenol	---	93 U	93	21	96 U	96	21	94 U	94	21	97 U	97	22	99 U	99	22
2,4,5-Trichlorophenol	---	93 U	93	20	96 U	96	20	94 U	94	20	97 U	97	21	99 U	99	21
2-Chloronaphthalene	---	18 U	18	2.4	19 U	19	2.5	19 U	19	2.5	19 U	19	2.6	20 U	20	2.6
2-Nitroaniline	---	93 U	93	17	96 U	96	18	94 U	94	17	97 U	97	18	99 U	99	18
Dimethylphthalate	71	18 U	18	2.7	19 U	19	2.8	19 U	19	2.7	19 U	19	2.8	20 U	20	2.9
Acenaphthylene	---	18 U	18	5.3	19 U	19	5.5	19 U	19	5.3	19 U	19	5.5	20 U	20	5.6
3-Nitroaniline	---	93 U	93	21	96 U	96	22	94 U	94	21	97 U	97	22	99 U	99	22
Acenaphthene	230,000	18 U	18	3.0	19 U	19	3.1	19 U	19	3.1	19 U	19	3.2	20 U	20	3.2
2,4-Dinitrophenol	---	790 U	790	100	810 U	810	110	800 U	800	100	830 U	830	110	840 U	840	110
4-Nitrophenol	---	93 U	93	32	96 U	96	33	94 U	94	32	97 U	97	34	99 U	99	34
Dibenzofuran	80,000	18 U	18	3.8	19 U	19	3.9	19 U	19	3.8	19 U	19	4.0	20 U	20	4.0
2,6-Dinitrotoluene	---	93 U	93	28	96 U	96	29	94 U	94	29	97 U	97	30	99 U	99	30

TABLE M-3
MONITORING WELL BORINGS SOIL ANALYTICAL RESULTS
BOEING ISAACSON-THOMPSON
REMEDIAL INVESTIGATION

	Preliminary Cleanup Level	IT-MW-22(8-9.5) TW89K 11/11/2011			IT-MW-22(13.5-15) TW89L 11/11/2011			IT-MW-23(11-12.5) TW35A 11/09/2011			IT-MW-23(12.5-14) TW35B 11/09/2011			IT-MW-24(12.5-14) TX01D 11/14/2011		
		Result	Reporting Limit	Detection Limit	Result	Reporting Limit	Detection Limit	Result	Reporting Limit	Detection Limit	Result	Reporting Limit	Detection Limit	Result	Reporting Limit	Detection Limit
2,4-Dinitrotoluene	---	93 U	93	18	96 U	96	19	94 U	94	18	97 U	97	19	99 U	99	19
Diethylphthalate	178,000	46 U	46	34	48 U	48	35	47 U	47	34	49 U	49	36	49 U	49	36
4-Chlorophenyl-phenylether	---	18 U	18	4.9	19 U	19	5.1	19 U	19	5.0	19 U	19	5.1	20 U	20	5.2
Fluorene	150,000	18 U	18	4.0	19 U	19	4.2	19 U	19	4.1	19 U	19	4.2	20 U	20	4.3
4-Nitroaniline	---	93 U	93	35	96 U	96	36	94 U	94	35	97 U	97	37	99 U	99	37
4,6-Dinitro-2-Methylphenol	---	180 U	180	20	190 U	190	20	190 U	190	20	190 U	190	21	200 U	200	21
N-Nitrosodiphenylamine	204,000	18 U	18	5.0	19 U	19	5.2	19 U	19	5.0	19 U	19	5.2	20 U	20	5.3
4-Bromophenyl-phenylether	---	18 U	18	4.7	19 U	19	4.8	19 U	19	4.7	19 U	19	4.9	20 U	20	5.0
Hexachlorobenzene	---	18 U	18	4.0	19 U	19	4.1	19 U	19	4.0	19 U	19	4.2	20 U	20	4.2
Pentachlorophenol	---	180 U	180	45	190 U	190	46	190 U	190	45	190 U	190	47	200 UJ	200	48
Phenanthrene	---	**21**	18	3.4	19 U	19	3.5	19 U	19	3.4	19 U	19	3.5	20 U	20	3.6
Carbazole	50,000	18 U	18	2.5	19 U	19	2.6	19 UJ	19	2.5	19 UJ	19	2.6	20 U	20	2.7
Anthracene	1,600,000	18 U	18	4.2	19 U	19	4.3	19 U	19	4.2	19 U	19	4.4	20 U	20	4.4
Di-n-Butylphthalate	26,000	18 U	18	7.6	19 U	19	7.8	19 U	19	7.6	19 U	19	7.9	20 U	20	8.1
Fluoranthene	230,000	**19**	18	2.7	19 U	19	2.8	19 U	19	2.7	19 U	19	2.8	20 U	20	2.9
Pyrene	240,000	**20**	18	1.8	19 U	19	1.9	19 U	19	1.8	19 U	19	1.9	20 U	20	1.9
Butylbenzylphthalate	1,700	18 U	18	5.7	19 U	19	5.9	19 U	19	5.7	19 U	19	6.0	20 U	20	6.1
3,3'-Dichlorobenzidine	---	140 UJ	140	16	140 UJ	140	17	140 U	140	17	150 U	150	17	150 U	150	18
Benzo(a)anthracene	---	18 U	18	3.0	19 U	19	3.1	19 U	19	3.1	19 U	19	3.2	20 U	20	3.2
bis(2-Ethylhexyl)phthalate	56,600	30 U	23	14	30 U	24	14	23 U	23	14	37 U	24	14	**17** J1	25	14
Chrysene	---	**10** J1	18	3.5	19 U	19	3.6	19 U	19	3.5	19 U	19	3.6	20 U	20	3.7
Di-n-Octyl phthalate	---	18 U	18	5.4	19 U	19	5.6	19 U	19	5.5	19 U	19	5.7	20 U	20	5.8
Benzo(a)pyrene	---	18 U	18	5.0	19 U	19	5.2	19 U	19	5.1	19 U	19	5.3	20 U	20	5.4
Indeno(1,2,3-cd)pyrene	---	18 U	18	4.3	19 U	19	4.5	19 U	19	4.4	19 U	19	4.5	20 U	20	4.6
Dibenz(a,h)anthracene	---	18 U	18	4.0	19 U	19	4.1	19 U	19	4.0	19 U	19	4.2	20 U	20	4.3
Benzo(g,h,i)perylene	---	18 U	18	4.1	19 U	19	4.2	19 U	19	4.1	19 U	19	4.3	20 U	20	4.3
1-Methylnaphthalene	16,000	18 U	18	2.5	19 U	19	2.6	19 U	19	2.5	19 U	19	2.6	20 U	20	2.6
Total Benzofluoranthenes	---	**12** J1	18	2.5	19 U	19	2.6	19 U	19	2.6	19 U	19	2.7	20 U	20	2.7
cPAH TEQ	15	**1.3** J	NA	NA	ND	NA	NA	ND	NA	NA	ND	NA	NA	ND	NA	NA
PAHs (µg/kg)																
Method SW8270D-SIM																
Naphthalene	2,100	**27**	4.6	2.4	4.8 U	4.8	2.6	**2.9** J1	4.6	2.4	**3.2** J1	4.9	2.6	**9.0**	5.0	2.6
2-Methylnaphthalene	320,000	**9.9**	4.6	1.4	4.8 U	4.8	1.5	**3.6** J1	4.6	1.4	**3.0** J1	4.9	1.5	**9.6**	5.0	1.5
1-Methylnaphthalene	16,000	**9.5**	4.6	1.6	4.8 U	4.8	1.7	**7.9**	4.6	1.6	**4.9**	4.9	1.7	**7.9**	5.0	1.7
Total Naphthalenes	---	**46.4**	NA	NA	4.8 U	NA	NA	**14.4** J1	NA	NA	**11.1** J1	NA	NA	**26.5**	NA	NA
Acenaphthylene	---	**5.0**	4.6	1.2	4.8 U	4.8	1.2	4.6 U	4.6	1.2	4.9 U	4.9	1.2	5.0 U	5.0	1.3
Acenaphthene	230,000	**6.9**	4.6	1.2	4.8 U	4.8	1.3	4.6 U	4.6	1.2	4.9 U	4.9	1.3	5.0 U	5.0	1.3
Fluorene	150,000	**6.4**	4.6	1.2	4.8 U	4.8	1.3	4.6 U	4.6	1.2	4.9 U	4.9	1.3	5.0 U	5.0	1.3
Phenanthrene	---	**37**	4.6	1.8	**5.2**	4.8	1.9	**4.4** J1	4.6	1.8	**5.2**	4.9	1.9	**22**	5.0	2.0
Anthracene	1,600,000	**6.1**	4.6	1.4	4.8 U	4.8	1.4	4.6 U	4.6	1.4	4.9 U	4.9	1.4	**3.0** J1	5.0	1.4
Fluoranthene	230,000	**36**	4.6	1.6	**10**	4.8	1.7	4.6 U	4.6	1.6	**2.9** J1	4.9	1.7	**14**	5.0	1.8
Pyrene	240,000	**32**	4.6	2.1	**13**	4.8	2.2	4.6 U	4.6	2.1	**3.1** J1	4.9	2.2	**16**	5.0	2.2
Benzo(a)anthracene	---	**10**	4.6	1.5	**9.4**	4.8	1.6	4.6 U	4.6	1.5	4.9 U	4.9	1.6	**6.6**	5.0	1.6
Chrysene	---	**15**	4.6	1.7	**9.5**	4.8	1.8	4.6 U	4.6	1.7	4.9 U	4.9	1.8	**14**	5.0	1.9
Benzo(a)pyrene	---	**12**	4.6	1.6	**13**	4.8	1.7	4.6 U	4.6	1.6	4.9 U	4.9	1.7	**12**	5.0	1.7
Indeno(1,2,3-cd)pyrene	---	**6.6**	4.6	3.2	**5.0**	4.8	3.4	4.6 U	4.6	3.2	4.9 U	4.9	3.4	**5.2**	5.0	3.4
Dibenz(a,h)anthracene	---	4.6 U	4.6	2.2	4.8 U	4.8	2.3	4.6 U	4.6	2.2	4.9 U	4.9	2.3	**2.9** J1	5.0	2.4
Benzo(g,h,i)perylene	---	**10**	4.6	2.8	**6.9**	4.8	3.0	4.6 U	4.6	2.8	4.9 U	4.9	3.0	**8.9**	5.0	3.0
Dibenzofuran	80,000	**9.4**	4.6	1.4	4.8 U	4.8	1.5	4.6 U	4.6	1.4	4.9 U	4.9	1.5	**4.3** J1	5.0	1.5
Total Benzofluoranthenes	---	**20**	4.6	1.7	**15**	4.8	1.8	4.6 U	4.6	1.7	4.9 U	4.9	1.8	**13**	5.0	1.8
cPAH TEQ	15	**15.8**	NA	NA	**16.0**	NA	NA	ND	NA	NA	ND	NA	NA	**15** J	NA	NA

TABLE M-3
MONITORING WELL BORINGS SOIL ANALYTICAL RESULTS
BOEING ISAACSON-THOMPSON
REMEDIAL INVESTIGATION

	Preliminary Cleanup Level	IT-MW-22(8-9.5) TW89K 11/11/2011			IT-MW-22(13.5-15) TW89L 11/11/2011			IT-MW-23(11-12.5) TW35A 11/09/2011			IT-MW-23(12.5-14) TW35B 11/09/2011			IT-MW-24(12.5-14) TX01D 11/14/2011		
		Result	Reporting Limit	Detection Limit	Result	Reporting Limit	Detection Limit	Result	Reporting Limit	Detection Limit	Result	Reporting Limit	Detection Limit	Result	Reporting Limit	Detection Limit
PCBs (µg/kg)																
Method SW8082																
Aroclor 1016	0.72	31 U	31	1.9	31 U	31	1.9	33 U	33	2.0	31 U	31	1.9	32 U	32	1.9
Aroclor 1242	0.72	31 U	31	2.3	31 U	31	2.3	33 U	33	2.4	31 U	31	2.3	32 U	32	2.3
Aroclor 1248	220	31 U	31	2.3	31 U	31	2.3	33 U	33	2.4	31 U	31	2.3	32 U	32	2.3
Aroclor 1254	0.29	31 U	31	2.3	31 U	31	2.3	33 U	33	2.4	31 U	31	2.3	32 U	32	2.3
Aroclor 1260	5.4	31 U	31	2.3	31 U	31	2.3	33 U	33	2.4	31 U	31	2.3	32 U	32	2.3
Aroclor 1221	---	31 U	31	2.3	31 U	31	2.3	33 U	33	2.4	31 U	31	2.3	32 U	32	2.3
Aroclor 1232	---	31 U	31	2.3	31 U	31	2.3	33 U	33	2.4	31 U	31	2.3	32 U	32	2.3
Total PCBs	1.8	ND	NA	NA	ND	NA	NA	ND	NA	NA	ND	NA	NA	ND	NA	NA
TOTAL PETROLEUM HYDROCARBONS (mg/kg)																
NWTPH-Dx																
Diesel-Range Organics	2,000	**10** J	6.4	1.6	5.9 U	5.9	1.5	6.6 U	6.6	1.7	6.2 U	6.2	1.6	**30**	6.4	1.6
Motor Oil-Range Organics	2,000	**22**	13	2.0	12 U	12	1.9	13 U	13	2.1	**15**	12	2.0	**45**	13	2
NWTPH-G																
Gasoline-Range Organics	100/30	8.0 U	8.0	3.8	6.9 U	6.9	3.3	8.3 U	8.3	4.0	7.6 U	7.6	3.6	7.5 U	7.5	3.6
TOTAL METALS (mg/kg)																
Methods 200.8/7471A/SW7196A																
Antimony	5	0.3 U	0.3	0.017	0.2 U	0.2	0.016	0.2 UJ	0.2	0.016	0.3 U	0.3	0.016	**0.3**	0.3	0.016
Arsenic	7	**535**	1	0.56	**58.8**	0.2	0.11	**102** J	0.2	0.11	**331**	0.3	0.11	**1640**	6	2.7
Barium	640	**67.6**	0.6	0.073	**39.0**	0.6	0.069	**50.7** J	0.6	0.070	**27.9**	0.6	0.071	**56.5**	0.6	0.070
Beryllium	160	**0.3**	0.3	0.023	0.2 U	0.2	0.022	0.2 U	0.2	0.022	0.3 U	0.3	0.023	**0.3**	0.3	0.023
Cadmium	1.3	**0.3**	0.1	0.016	0.1 U	0.1	0.015	0.1 U	0.1	0.015	0.1 U	0.1	0.015	**0.3**	0.1	0.015
Chromium	1,480	**15.1**	0.6	0.049	**11.9**	0.6	0.047	**13.2**	0.6	0.047	**11.6**	0.6	0.048	**16.6**	0.6	0.048
Chromium VI	3.8	0.526 U	0.526	0.030	0.512 U	0.512	0.030	**0.521**	0.521	0.030	0.517 U	0.517	0.030	0.511 U	0.511	0.030
Copper	36	**804**	3	0.23	**388**	3	0.22	**180**	0.6	0.045	**514**	3	0.23	**226**	0.6	0.045
Lead	250	**6.8**	0.1	0.061	**1.8**	0.1	0.058	**2.2** J	0.1	0.058	**2.2**	0.1	0.060	**18.0**	0.1	0.059
Mercury	1.5	**0.10**	0.03	0.0015	0.03 U	0.03	0.0015	**0.21** J	0.03	0.0014	**0.15**	0.03	0.0015	**1.14**	0.03	0.0013
Nickel	210	**13.2**	0.6	0.064	**8.4**	0.6	0.060	**10.1**	0.6	0.061	**8.3**	0.6	0.062	**13.6**	0.6	0.061
Selenium	1.0	0.6 U	0.6	0.13	0.6 U	0.6	0.12	0.6 U	0.6	0.12	0.6 U	0.6	0.13	0.6 U	0.6	0.12
Silver	170	0.3 U	0.3	0.010	0.2 U	0.2	0.0098	0.2 U	0.2	0.0099	0.3 U	0.3	0.010	0.3 U	0.3	0.010
Thallium	0.67	**0.8**	0.3	0.0039	0.2 U	0.2	0.0037	0.2 U	0.2	0.0037	**0.3**	0.3	0.0038	**0.7**	0.3	0.0038
Zinc	1,400	**66**	5	0.44	**235**	5	0.42	**44**	5	0.42	**98**	5	0.43	**127**	5	0.42

TABLE M-3
MONITORING WELL BORINGS SOIL ANALYTICAL RESULTS
BOEING ISAACSON-THOMPSON
REMEDIAL INVESTIGATION

	Preliminary Cleanup Level	IT-MW-24(14-15.5) TX01E 11/14/2011			IT-MW-25(8-9.5) TX01A 11/14/2011			IT-MW-25(13.5-15) TX01B 11/14/2011			IT-MW-25(15.5-17) TX01C 11/14/2011		
		Result	Reporting Limit	Detection Limit	Result	Reporting Limit	Detection Limit	Result	Reporting Limit	Detection Limit	Result	Reporting Limit	Detection Limit
VOLATILES (µg/kg)													
Method SW8260C													
Chloromethane	1,600	1.5 UJ	1.5	0.38	1.2 U	1.2	0.31	1.2 UJ	1.2	0.32	1.3 UJ	1.3	0.35
Bromomethane	---	1.5 UJ	1.5	0.27	1.2 UJ	1.2	0.22	1.2 UJ	1.2	0.22	1.3 UJ	1.3	0.25
Vinyl Chloride	7.4	1.5 U	1.5	0.34	1.2 U	1.2	0.28	1.2 U	1.2	0.28	1.3 U	1.3	0.32
Chloroethane	280,000	1.5 UJ	1.5	0.67	1.2 U	1.2	0.55	1.2 UJ	1.2	0.55	1.3 UJ	1.3	0.62
Methylene Chloride	2400	**1.5** J, J1	2.9	0.92	**2.3** J1	2.4	0.75	**1.4** J, J1	2.4	0.76	**3.3** J	2.7	0.86
Acetone	510,000	**500** J	7.3	0.70	**35** J	5.9	0.57	**18** J	6.0	0.58	**38** J	6.7	0.65
Carbon Disulfide	75,000	**2.8**	1.5	0.81	1.2 U	1.2	0.66	**2.4** J	1.2	0.67	1.3 U	1.3	0.75
1,1-Dichloroethene	81	1.5 U	1.5	0.49	1.2 U	1.2	0.40	1.2 UJ	1.2	0.40	1.3 U	1.3	0.45
1,1-Dichloroethane	710	1.5 UJ	1.5	0.30	1.2 UJ	1.2	0.24	1.2 UJ	1.2	0.24	1.3 UJ	1.3	0.27
trans-1,2-Dichloroethene	19,000	1.5 U	1.5	0.39	1.2 UJ	1.2	0.31	1.2 UJ	1.2	0.32	1.3 U	1.3	0.36
cis-1,2-Dichloroethene	2,600	1.5 U	1.5	0.35	1.2 U	1.2	0.28	1.2 U	1.2	0.29	1.3 U	1.3	0.32
Chloroform	200	1.5 U	1.5	0.34	1.2 U	1.2	0.28	1.2 U	1.2	0.28	1.3 U	1.3	0.32
1,2-Dichloroethane	70	1.5 U	1.5	0.28	1.2 U	1.2	0.23	1.2 U	1.2	0.23	1.3 U	1.3	0.26
2-Butanone	430,000	**46**	7.3	0.75	5.9 U	5.9	0.61	6.0 U	6.0	0.62	6.7 U	6.7	0.69
1,1,1-Trichloroethane	1,900,000	1.5 U	1.5	0.33	1.2 U	1.2	0.27	1.2 U	1.2	0.27	1.3 U	1.3	0.30
Carbon Tetrachloride	21	1.5 U	1.5	0.31	1.2 U	1.2	0.25	1.2 U	1.2	0.26	1.3 U	1.3	0.29
Vinyl Acetate	---	7.3 U	7.3	0.55	5.9 U	5.9	0.45	6.0 U	6.0	0.46	6.7 U	6.7	0.51
Bromodichloromethane	89	1.5 U	1.5	0.37	1.2 U	1.2	0.30	1.2 U	1.2	0.30	1.3 U	1.3	0.34
1,2-Dichloropropane	92	1.5 U	1.5	0.24	1.2 U	1.2	0.19	1.2 U	1.2	0.19	1.3 U	1.3	0.22
cis-1,3-Dichloropropene	---	1.5 U	1.5	0.33	1.2 U	1.2	0.27	1.2 U	1.2	0.27	1.3 U	1.3	0.30
Trichloroethene	51	**1.7**	1.5	0.31	1.2 U	1.2	0.25	**1.8**	1.2	0.25	1.3 U	1.3	0.29
Dibromochloromethane	---	1.5 U	1.5	0.39	1.2 U	1.2	0.31	1.2 U	1.2	0.32	1.3 U	1.3	0.36
1,1,2-Trichloroethane	73	1.5 U	1.5	0.42	1.2 U	1.2	0.34	1.2 U	1.2	0.34	1.3 U	1.3	0.39
Benzene	93	1.5 U	1.5	0.43	1.2 U	1.2	0.35	1.2 U	1.2	0.35	1.3 U	1.3	0.40
trans-1,3-Dichloropropene	---	1.5 U	1.5	0.31	1.2 U	1.2	0.26	1.2 U	1.2	0.26	1.3 U	1.3	0.29
2-Chloroethylvinylether	---	7.3 U	7.3	0.40	5.9 U	5.9	0.33	6.0 U	6.0	0.33	6.7 U	6.7	0.37
Bromoform	---	1.5 U	1.5	0.43	1.2 U	1.2	0.35	1.2 U	1.2	0.36	1.3 U	1.3	0.40
4-Methyl-2-Pentanone (MIBK)	170,000	7.3 U	7.3	0.61	5.9 U	5.9	0.50	6.0 U	6.0	0.50	6.7 U	6.7	0.57
2-Hexanone	32,000	7.3 U	7.3	0.64	5.9 U	5.9	0.52	6.0 U	6.0	0.53	6.7 U	6.7	0.59
Tetrachloroethene	260	1.5 U	1.5	0.37	**1.6**	1.2	0.30	1.2 U	1.2	0.31	1.3 U	1.3	0.35
1,1,2,2-Tetrachloroethane	13	1.5 U	1.5	0.37	1.2 U	1.2	0.30	1.2 U	1.2	0.30	1.3 U	1.3	0.34
Toluene	100,000	1.5 U	1.5	0.22	1.2 U	1.2	0.18	1.2 U	1.2	0.18	1.3 U	1.3	0.20
Chlorobenzene	26,000	1.5 U	1.5	0.32	1.2 U	1.2	0.26	1.2 U	1.2	0.26	1.3 U	1.3	0.30
Ethylbenzene	230	1.5 U	1.5	0.29	1.2 U	1.2	0.24	**1.2** J1	1.2	0.24	1.3 U	1.3	0.27
Styrene	16,000,000	1.5 U	1.5	0.20	1.2 U	1.2	0.16	1.2 U	1.2	0.17	1.3 U	1.3	0.19
Trichlorofluoromethane	200,000	**0.8** J, J1	1.5	0.39	**1.7**	1.2	0.31	**0.8** J, J1	1.2	0.32	1.3 U	1.3	0.36
1,1,2-Trichloro-1,2,2-trifuoroethane	1,000,000,000	2.9 U	2.9	0.42	2.4 U	2.4	0.34	2.4 UJ	2.4	0.34	2.7 U	2.7	0.39
m,p-Xylene	160,000	1.5 U	1.5	0.57	1.2 U	1.2	0.46	**4.3**	1.2	0.47	**2.3**	1.3	0.53
o-Xylene	200,000	1.5 U	1.5	0.33	1.2 U	1.2	0.26	**4.1**	1.2	0.27	**1.6**	1.3	0.30
1,2-Dichlorobenzene	68,000	1.5 U	1.5	0.43	1.2 U	1.2	0.35	1.2 UJ	1.2	0.35	1.3 U	1.3	0.39
1,3-Dichlorobenzene	3,840	1.5 U	1.5	0.33	1.2 U	1.2	0.27	1.2 UJ	1.2	0.27	1.3 U	1.3	0.31
1,4-Dichlorobenzene	3,500	1.5 U	1.5	0.34	1.2 U	1.2	0.27	1.2 UJ	1.2	0.28	1.3 U	1.3	0.31
Acrolein	---	73 UJ	73	5.5	59 U	59	4.5	60 UJ	60	4.6	67 UJ	67	5.1
Methyl Iodide	---	1.5 U	1.5	0.31	1.2 U	1.2	0.25	1.2 UJ	1.2	0.26	1.3 U	1.3	0.29
Bromoethane	---	2.9 U	2.9	0.64	2.4 U	2.4	0.52	2.4 UJ	2.4	0.53	2.7 U	2.7	0.59
Acrylonitrile	---	7.3 U	7.3	1.5	5.9 U	5.9	1.2	6.0 U	6.0	1.2	6.7 U	6.7	1.4
1,1-Dichloropropene	---	1.5 U	1.5	0.45	1.2 U	1.2	0.37	1.2 U	1.2	0.37	1.3 U	1.3	0.42
Dibromomethane	---	1.5 U	1.5	0.21	1.2 U	1.2	0.17	1.2 U	1.2	0.18	1.3 U	1.3	0.20
1,1,1,2-Tetrachloroethane	---	1.5 U	1.5	0.34	1.2 U	1.2	0.28	1.2 U	1.2	0.28	1.3 U	1.3	0.31
1,2-Dibromo-3-chloropropane	---	7.3 U	7.3	0.85	5.9 U	5.9	0.69	6.0 U	6.0	0.70	6.7 U	6.7	0.79
1,2,3-Trichloropropane	---	2.9 U	2.9	0.75	2.4 U	2.4	0.61	2.4 U	2.4	0.62	2.7 U	2.7	0.70
trans-1,4-Dichloro-2-butene	---	7.3 U	7.3	0.64	5.9 U	5.9	0.52	6.0 U	6.0	0.52	6.7 U	6.7	0.59
1,3,5-Trimethylbenzene	800,000	1.5 U	1.5	0.37	1.2 U	1.2	0.30	**1.4**	1.2	0.30	**0.8** J1	1.3	0.34
1,2,4-Trimethylbenzene	800,000	1.5 U	1.5	0.33	1.2 U	1.2	0.27	**2.9**	1.2	0.28	**1.7**	1.3	0.31
Hexachlorobutadiene	---	7.3 U	7.3	0.60	5.9 U	5.9	0.48	6.0 UJ	6.0	0.49	6.7 U	6.7	0.55

TABLE M-3
MONITORING WELL BORINGS SOIL ANALYTICAL RESULTS
BOEING ISAACSON-THOMPSON
REMEDIAL INVESTIGATION

	Preliminary Cleanup Level	IT-MW-24(14-15.5) TX01E 11/14/2011			IT-MW-25(8-9.5) TX01A 11/14/2011			IT-MW-25(13.5-15) TX01B 11/14/2011			IT-MW-25(15.5-17) TX01C 11/14/2011		
		Result	Reporting Limit	Detection Limit	Result	Reporting Limit	Detection Limit	Result	Reporting Limit	Detection Limit	Result	Reporting Limit	Detection Limit
Ethylene Dibromide	---	1.5 U	1.5	0.26	1.2 U	1.2	0.21	1.2 U	1.2	0.21	1.3 U	1.3	0.24
Bromochloromethane	---	1.5 U	1.5	0.47	1.2 U	1.2	0.38	1.2 U	1.2	0.39	1.3 U	1.3	0.44
2,2-Dichloropropane	---	1.5 U	1.5	0.42	1.2 U	1.2	0.35	1.2 U	1.2	0.35	1.3 U	1.3	0.39
1,3-Dichloropropane	---	1.5 U	1.5	0.30	1.2 U	1.2	0.25	1.2 U	1.2	0.25	1.3 U	1.3	0.28
Isopropylbenzene	78,000	1.5 U	1.5	0.34	1.2 U	1.2	0.28	**1.2** J1	1.2	0.28	1.3 U	1.3	0.31
n-Propylbenzene	11,000	1.5 U	1.5	0.40	1.2 U	1.2	0.32	**1.3**	1.2	0.33	1.3 U	1.3	0.37
Bromobenzene	---	1.5 U	1.5	0.22	1.2 U	1.2	0.18	1.2 U	1.2	0.18	1.3 U	1.3	0.21
2-Chlorotoluene	---	1.5 U	1.5	0.44	1.2 U	1.2	0.35	1.2 U	1.2	0.36	1.3 U	1.3	0.40
4-Chlorotoluene	400,000	1.5 U	1.5	0.40	1.2 U	1.2	0.33	1.2 U	1.2	0.33	1.3 U	1.3	0.37
tert-Butylbenzene	---	1.5 U	1.5	0.44	1.2 U	1.2	0.36	1.2 U	1.2	0.37	1.3 U	1.3	0.41
sec-Butylbenzene	---	1.5 U	1.5	0.35	1.2 U	1.2	0.28	1.2 U	1.2	0.29	1.3 U	1.3	0.32
4-Isopropyltoluene	---	1.5 U	1.5	0.34	1.2 U	1.2	0.28	1.2 U	1.2	0.28	1.3 U	1.3	0.32
n-Butylbenzene	27,000	1.5 U	1.5	0.38	1.2 U	1.2	0.31	1.2 U	1.2	0.31	1.3 U	1.3	0.35
1,2,4-Trichlorobenzene	80	7.3 U	7.3	0.48	5.9 U	5.9	0.39	6.0 UJ	6.0	0.40	6.7 U	6.7	0.45
Naphthalene	2,100	7.3 U	7.3	0.62	5.9 U	5.9	0.51	**0.7** J, J1	6.0	0.51	**1.1** J, J1	6.7	0.58
1,2,3-Trichlorobenzene	---	7.3 U	7.3	0.44	5.9 U	5.9	0.36	6.0 UJ	6.0	0.37	6.7 U	6.7	0.41
SEMIVOLATILES (µg/kg)													
Method SW8270D													
Phenol	1,900,000	**160**	18	7.8	18 U	18	8.0	18 U	18	7.8	19 U	19	8.3
Bis-(2-Chloroethyl) Ether	---	18 U	18	3.0	18 U	18	3.1	18 U	18	3.0	19 U	19	3.2
2-Chlorophenol	---	18 U	18	2.2	18 U	18	2.2	18 U	18	2.2	19 U	19	2.3
1,3-Dichlorobenzene	3,840	18 U	18	2.4	18 U	18	2.4	18 U	18	2.4	19 U	19	2.5
1,4-Dichlorobenzene	3,500	18 U	18	2.6	18 U	18	2.6	18 U	18	2.6	19 U	19	2.7
Benzyl Alcohol	8,000,000	18 U	18	5.5	18 U	18	5.6	18 U	18	5.5	19 U	19	5.8
1,2-Dichlorobenzene	68,000	18 U	18	2.3	18 U	18	2.3	18 U	18	2.3	19 U	19	2.4
2-Methylphenol	250,000	18 U	18	4.8	18 U	18	4.8	18 U	18	4.8	19 U	19	5.0
2,2'-Oxybis(1-Chloropropane)	---	18 U	18	3.4	18 U	18	3.5	18 U	18	3.4	19 U	19	3.6
4-Methylphenol	41,000	36 U	36	6.0	37 U	37	6.1	36 U	36	6.0	38 U	38	6.3
N-Nitroso-Di-N-Propylamine	---	18 U	18	3.0	18 U	18	3.1	18 U	18	3.0	19 U	19	3.2
Hexachloroethane	---	18 U	18	2.7	18 U	18	2.7	18 U	18	2.7	19 U	19	2.8
Nitrobenzene	---	18 U	18	3.7	18 U	18	3.7	18 U	18	3.7	19 U	19	3.9
Isophorone	---	18 U	18	2.6	18 U	18	2.6	18 U	18	2.6	19 U	19	2.7
2-Nitrophenol	---	90 U	90	35	92 U	92	36	91 U	91	35	96 U	96	37
2,4-Dimethylphenol	95,000	36 U	36	3.1	37 U	37	3.2	36 U	36	3.1	38 U	38	3.3
Benzoic Acid	9,000	360 U	360	91	370 U	370	93	360 U	360	92	380 U	380	97
bis(2-Chloroethoxy) Methane	---	18 U	18	1.8	18 U	18	1.8	18 U	18	1.8	19 U	19	1.9
2,4-Dichlorophenol	---	180 U	180	19	180 U	180	20	180 U	180	20	190 U	190	21
1,2,4-Trichlorobenzene	80	18 U	18	3.1	18 U	18	3.2	18 U	18	3.2	19 U	19	3.3
Naphthalene	2,100	18 U	18	2.5	18 U	18	2.5	18 U	18	2.5	19 U	19	2.6
4-Chloroaniline	---	240 U	240	20	250 U	250	21	240 U	240	20	260 U	260	21
Hexachlorobutadiene	---	90 U	90	4.1	92 U	92	4.2	91 U	91	4.1	96 U	96	4.4
4-Chloro-3-methylphenol	740,000	90 U	90	14	92 U	92	14	91 U	91	14	96 U	96	14
2-Methylnaphthalene	320,000	18 U	18	2.8	18 U	18	2.8	18 U	18	2.8	19 U	19	2.9
Hexachlorocyclopentadiene	---	360 U	360	60	370 U	370	61	360 UJ	360	60	380 U	380	63
2,4,6-Trichlorophenol	---	90 U	90	20	92 U	92	21	91 U	91	20	96 U	96	21
2,4,5-Trichlorophenol	---	90 U	90	19	92 U	92	20	91 U	91	19	96 U	96	20
2-Chloronaphthalene	---	18 U	18	2.4	18 U	18	2.4	18 U	18	2.4	19 U	19	2.5
2-Nitroaniline	---	90 U	90	17	92 U	92	17	91 U	91	17	96 U	96	18
Dimethylphthalate	71	18 U	18	2.6	18 U	18	2.7	18 U	18	2.6	19 U	19	2.8
Acenaphthylene	---	18 U	18	5.2	18 U	18	5.3	18 U	18	5.2	19 U	19	5.5
3-Nitroaniline	---	90 U	90	20	92 U	92	21	91 U	91	20	96 U	96	22
Acenaphthene	230,000	18 U	18	3.0	18 U	18	3.0	18 U	18	3.0	19 U	19	3.1
2,4-Dinitrophenol	---	770 U	770	100	780 U	780	100	770 U	770	100	810 U	810	110
4-Nitrophenol	---	90 U	90	31	92 U	92	32	91 U	91	31	96 U	96	33
Dibenzofuran	80,000	18 U	18	3.7	18 U	18	3.8	18 U	18	3.7	19 U	19	3.9
2,6-Dinitrotoluene	---	90 U	90	28	92 U	92	28	91 U	91	28	96 U	96	29

TABLE M-3
MONITORING WELL BORINGS SOIL ANALYTICAL RESULTS
BOEING ISAACSON-THOMPSON
REMEDIAL INVESTIGATION

	Preliminary Cleanup Level	IT-MW-24(14-15.5) TX01E 11/14/2011			IT-MW-25(8-9.5) TX01A 11/14/2011			IT-MW-25(13.5-15) TX01B 11/14/2011			IT-MW-25(15.5-17) TX01C 11/14/2011		
		Result	Reporting Limit	Detection Limit	Result	Reporting Limit	Detection Limit	Result	Reporting Limit	Detection Limit	Result	Reporting Limit	Detection Limit
2,4-Dinitrotoluene	---	90 U	90	18	92 U	92	18	91 U	91	18	96 U	96	19
Diethylphthalate	178,000	45 U	45	33	46 U	46	34	45 U	45	33	48 U	48	35
4-Chlorophenyl-phenylether	---	18 U	18	4.8	18 U	18	4.9	18 U	18	4.8	19 U	19	5.1
Fluorene	150,000	18 U	18	3.9	18 U	18	4.0	18 U	18	3.9	19 U	19	4.2
4-Nitroaniline	---	90 U	90	34	92 U	92	35	91 U	91	34	96 U	96	36
4,6-Dinitro-2-Methylphenol	---	180 U	180	19	180 U	180	20	180 U	180	19	190 U	190	20
N-Nitrosodiphenylamine	204,000	18 U	18	4.9	18 U	18	5.0	18 U	18	4.9	19 U	19	5.2
4-Bromophenyl-phenylether	---	18 U	18	4.6	18 U	18	4.6	18 U	18	4.6	19 U	19	4.8
Hexachlorobenzene	---	18 U	18	3.9	18 U	18	4.0	18 U	18	3.9	19 U	19	4.1
Pentachlorophenol	---	180 UJ	180	44	180 UJ	180	45	180 UJ	180	44	190 UJ	190	46
Phenanthrene	---	18 U	18	3.3	**27**	18	3.4	18 U	18	3.3	19 U	19	3.5
Carbazole	50,000	18 U	18	2.4	18 U	18	2.5	18 U	18	2.4	19 U	19	2.6
Anthracene	1,600,000	18 U	18	4.1	18 U	18	4.1	18 U	18	4.1	19 U	19	4.3
Di-n-Butylphthalate	26,000	18 U	18	7.4	18 U	18	7.5	18 U	18	7.4	19 U	19	7.8
Fluoranthene	230,000	18 U	18	2.6	**20**	18	2.7	18 U	18	2.6	19 U	19	2.8
Pyrene	240,000	18 U	18	1.8	**26**	18	1.8	18 U	18	1.8	19 U	19	1.9
Butylbenzylphthalate	1,700	18 U	18	5.6	18 U	18	5.7	18 U	18	5.6	19 U	19	5.9
3,3'-Dichlorobenzidine	---	140 U	140	16	140 U	140	16	140 U	140	16	140 U	140	17
Benzo(a)anthracene	---	18 U	18	3.0	**14** J1	18	3.0	18 U	18	3.0	19 U	19	3.1
bis(2-Ethylhexyl)phthalate	56,600	**24**	23	13	**72**	23	13	**94**	23	13	**86**	24	14
Chrysene	---	18 U	18	3.4	**27**	18	3.5	18 U	18	3.4	19 U	19	3.6
Di-n-Octyl phthalate	---	18 U	18	5.3	18 U	18	5.4	18 U	18	5.3	19 U	19	5.6
Benzo(a)pyrene	---	18 U	18	4.9	**14** J1	18	5.0	18 U	18	4.9	19 U	19	5.2
Indeno(1,2,3-cd)pyrene	---	18 U	18	4.2	18 U	18	4.3	18 U	18	4.2	19 U	19	4.5
Dibenz(a,h)anthracene	---	18 U	18	3.9	18 U	18	4.0	18 U	18	3.9	19 U	19	4.1
Benzo(g,h,i)perylene	---	18 U	18	4.0	18 U	18	4.1	18 U	18	4.0	19 U	19	4.2
1-Methylnaphthalene	16,000	18 U	18	2.4	18 U	18	2.5	18 U	18	2.4	19 U	19	2.6
Total Benzofluoranthenes	---	18 U	18	2.5	18 U	18	2.5	18 U	18	2.5	19 U	19	2.6
cPAH TEQ	15	ND	NA	NA	**16** J	NA	NA	ND	NA	NA	ND	NA	NA
PAHs (µg/kg)													
Method SW8270D-SIM													
Naphthalene	2,100	**4.2** J1	4.4	2.3	**3.2** J1	4.7	2.5	**4.0** J1	4.6	2.4	**4.4** J1	4.8	2.5
2-Methylnaphthalene	320,000	**5.9**	4.4	1.4	**4.4** J1	4.7	1.4	**3.8** J1	4.6	1.4	**4.6** J1	4.8	1.4
1-Methylnaphthalene	16,000	**4.5**	4.4	1.5	**3.3** J1	4.7	1.6	**4.2** J1	4.6	1.6	**3.9** J1	4.8	1.6
Total Naphthalenes	---	**14.6** J1	NA	NA	**10.9** J1	NA	NA	**12.0**	NA	NA	**12.9** J1	NA	NA
Acenaphthylene	---	4.4 U	4.4	1.1	4.7 U	4.7	1.2	4.6 U	4.6	1.2	4.8 U	4.8	1.2
Acenaphthene	230,000	4.4 U	4.4	1.2	**4.1** J1	4.7	1.2	4.6 U	4.6	1.2	4.8 U	4.8	1.3
Fluorene	150,000	4.4 U	4.4	1.1	4.7 U	4.7	1.2	**6.4**	4.6	1.2	**4.6** J1	4.8	1.2
Phenanthrene	---	**8.7**	4.4	1.8	**14**	4.7	1.9	**6.4**	4.6	1.8	**4.6** J1	4.8	1.9
Anthracene	1,600,000	4.4 U	4.4	1.3	4.7 U	4.7	1.4	4.6 U	4.6	1.3	4.8 U	4.8	1.4
Fluoranthene	230,000	**5.2**	4.4	1.6	**12**	4.7	1.7	**4.8**	4.6	1.6	4.8 U	4.8	1.7
Pyrene	240,000	**6.3**	4.4	2.0	**15**	4.7	2.1	**5.1**	4.6	2.0	**2.6** J1	4.8	2.1
Benzo(a)anthracene	---	**2.7** J1	4.4	1.4	**8.3**	4.7	1.5	**2.5** J1	4.6	1.5	4.8 U	4.8	1.5
Chrysene	---	**5.6**	4.4	1.7	**24**	4.7	1.8	**5.6**	4.6	1.7	**3.8** J1	4.8	1.8
Benzo(a)pyrene	---	**4.0** J1	4.4	1.6	**12**	4.7	1.6	**5.3**	4.6	1.6	4.8 U	4.8	1.7
Indeno(1,2,3-cd)pyrene	---	4.4 U	4.4	3.1	**4.2** J1	4.7	3.3	4.6 U	4.6	3.2	4.8 U	4.8	3.3
Dibenz(a,h)anthracene	---	4.4 U	4.4	2.1	**3.4** J1	4.7	2.2	4.6 U	4.6	2.2	4.8 U	4.8	2.3
Benzo(g,h,i)perylene	---	**3.6** J1	4.4	2.7	**9.8**	4.7	2.9	**2.9** J1	4.6	2.8	**3.6** J1	4.8	2.9
Dibenzofuran	80,000	4.4 U	4.4	1.3	4.7 U	4.7	1.4	**2.4** J1	4.6	1.4	4.8 U	4.8	1.4
Total Benzofluoranthenes	---	**7.5**	4.4	1.6	**14**	4.7	1.7	4.6 U	4.6	1.7	4.8 U	4.8	1.8
cPAH TEQ	15	**5.1** J	NA	NA	**15** J	NA	NA	**5.6** J	NA	NA	**0.04** J	NA	NA

TABLE M-3
MONITORING WELL BORINGS SOIL ANALYTICAL RESULTS
BOEING ISAACSON-THOMPSON
REMEDIAL INVESTIGATION

	Preliminary Cleanup Level	IT-MW-24(14-15.5) TX01E 11/14/2011			IT-MW-25(8-9.5) TX01A 11/14/2011			IT-MW-25(13.5-15) TX01B 11/14/2011			IT-MW-25(15.5-17) TX01C 11/14/2011		
		Result	Reporting Limit	Detection Limit	Result	Reporting Limit	Detection Limit	Result	Reporting Limit	Detection Limit	Result	Reporting Limit	Detection Limit
PCBs (µg/kg)													
Method SW8082													
Aroclor 1016	0.72	32 U	32	1.9	32 U	32	1.9	32 U	32	1.9	33 U	33	2.0
Aroclor 1242	0.72	32 U	32	2.3	32 U	32	2.3	32 U	32	2.4	33 U	33	2.4
Aroclor 1248	220	32 U	32	2.3	32 U	32	2.3	32 U	32	2.4	33 U	33	2.4
Aroclor 1254	0.29	32 U	32	2.3	32 U	32	2.3	32 U	32	2.4	33 U	33	2.4
Aroclor 1260	5.4	32 U	32	2.3	32 U	32	2.3	32 U	32	2.4	33 U	33	2.4
Aroclor 1221	---	32 U	32	2.3	32 U	32	2.3	32 U	32	2.4	33 U	33	2.4
Aroclor 1232	---	32 U	32	2.3	32 U	32	2.3	32 U	32	2.4	33 U	33	2.4
Total PCBs	1.8	ND	NA	NA	ND	NA	NA	ND	NA	NA	ND	NA	NA
TOTAL PETROLEUM HYDROCARBONS (mg/kg)													
NWTPH-Dx													
Diesel-Range Organics	2,000	6.0 U	6.0	1.5	**24**	5.7	1.5	**51**	5.9	1.5	**6.8**	6.1	1.6
Motor Oil-Range Organics	2,000	12 U	12	1.9	**100**	11	1.8	**53**	12	1.8	**18**	12	1.9
NWTPH-G													
Gasoline-Range Organics	100/30	8.1 U	8.1	3.9	**10**	8.0	3.8	7.0 U	7.0	3.3	8.4 U	8.4	4.0
TOTAL METALS (mg/kg)													
Methods 200.8/7471A/SW7196A													
Antimony	5	0.2 U	0.2	0.015	0.2 U	0.2	0.014	0.2 UJ	0.2	0.015	0.2 U	0.2	0.016
Arsenic	7	**1130**	1	0.51	**87.9**	0.2	0.092	**55.8**	0.2	0.099	**37.7**	0.2	0.11
Barium	640	**39.1**	0.6	0.066	**62.2**	0.5	0.059	**30.0** J	0.6	0.064	**28.6**	0.6	0.070
Beryllium	160	0.2 U	0.2	0.021	**0.2**	0.2	0.019	0.2 U	0.2	0.020	0.2 U	0.2	0.022
Cadmium	1.3	0.1 U	0.1	0.014	0.1 U	0.1	0.013	0.1 U	0.1	0.014	0.1 U	0.1	0.015
Chromium	1,480	**9.9**	0.6	0.044	**18.2**	0.5	0.040	**10.7**	0.6	0.043	**8.7**	0.6	0.047
Chromium VI	3.8	0.484 U	0.484	0.030	0.449 UJ	0.449	0.030	0.496 U	0.496	0.030	0.477 U	0.477	0.030
Copper	36	**322**	0.6	0.042	**85.7**	0.5	0.038	**303**	0.6	0.041	**224**	0.6	0.045
Lead	250	**3.6**	0.1	0.055	**8.4**	0.1	0.049	**2.8**	0.1	0.053	**1.4**	0.1	0.058
Mercury	1.5	**0.54**	0.03	0.0014	**0.05**	0.03	0.0013	**0.02**	0.02	0.0012	0.02 U	0.02	0.0012
Nickel	210	**8.8**	0.6	0.057	**20.3**	0.5	0.052	**10.6**	0.6	0.056	**9.0**	0.6	0.061
Selenium	1.0	0.6 U	0.6	0.12	0.5 U	0.5	0.10	0.6 U	0.6	0.11	0.6 U	0.6	0.12
Silver	170	0.2 U	0.2	0.0094	0.2 U	0.2	0.0084	0.2 U	0.2	0.0091	0.2 U	0.2	0.0099
Thallium	0.67	0.2 U	0.2	0.0035	0.2 U	0.2	0.0032	0.2 U	0.2	0.0034	0.2 U	0.2	0.0037
Zinc	1,400	**95**	5	0.40	**71**	4	0.36	**135**	5	0.38	**187**	5	0.42

ND = Not Detected.
NA = Not Applicable.
Bold = Detected compound.
Boxed = Exceeds Preliminary Cleanup Level
µg/kg = micrograms per kilogram
mg/kg = milligrams per kilogram

TEQ = Toxic Equivalent Concentration
SIM = Select Ion Monitoring
cPAH = Carcinogenic Polycyclic Aromatic Hydrocarbons
PCB = Polychlorinated Biphenyls
NWTPH-Dx = Total Petroleum Hydrocarbon-Diesel Range
NWTPH-G = Total Petroleum Hydrocarbon-Gasoline Range

U = Indicates the compound was not detected at or above the the reporting limit.
UJ = The analyte was not detected in the sample at a concentration at or above the reporting limit; the sample reporting limit is an estimate.
J = Indicates the analyte was positively identified; the associated numerical value is the approximate concentration of the analyte in the sample.
J1 = Laboratory flag indicating the analyte was positively identified; the associated concentration is approximate and less than the reporting limit, but equal to or greater than the detection limit.
UJ2 = The analyted was not detected in the sample at or above the numerical value shown; the numerical value is below the reporting limit, but greater than the detection limit.
M = Estimated value for an analyte detected and confirmed by an analyst, but with low spectral match parameters. This flag is used only for GC-MS analyses.

TABLE M-4
WOODEN BULKHEAD SOIL ANALYTICAL RESULTS
BOEING ISAACSON-THOMPSON
REMEDIAL INVESTIGATION

	Preliminary Cleanup Level	IT-WB-1 UM06A 03/12/2012			IT-WB-2 UM06B 03/12/2012			IT-WB-3-120312 UM06C 03/12/2012		
		Result	Reporting Limit	Detection Limit	Result	Reporting Limit	Detection Limit	Result	Reporting Limit	Detection Limit
VOLATILES (µg/kg)										
Method SW8260C										
Chloromethane	1,600	**0.6** J1	0.7	0.19	**0.6** J1	0.7	0.17	0.8 U	0.8	0.22
Bromomethane	---	**0.4** J1	0.7	0.14	**0.7** J1	0.7	0.12	0.8 U	0.8	0.16
Vinyl Chloride	7.4	0.7 U	0.7	0.17	0.7 U	0.7	0.16	0.8 U	0.8	0.20
Chloroethane	280,000	0.7 U	0.7	0.33	0.7 U	0.7	0.31	0.8 U	0.8	0.39
Methylene Chloride	2400	**1.7**	1.4	0.46	**2.3**	1.3	0.42	**1.1** J1	1.7	0.53
Acetone	510,000	**50**	3.6	0.35	**46**	3.3	0.32	**58**	4.2	0.40
Carbon Disulfide	75,000	**1.9** J	0.7	0.41	**0.8** J	0.7	0.37	**0.9** J	0.8	0.47
1,1-Dichloroethene	81	0.7 U	0.7	0.24	0.7 U	0.7	0.22	0.8 U	0.8	0.28
1,1-Dichloroethane	710	0.7 U	0.7	0.15	0.7 U	0.7	0.13	0.8 U	0.8	0.17
trans-1,2-Dichloroethene	19,000	0.7 U	0.7	0.19	0.7 U	0.7	0.18	0.8 U	0.8	0.22
cis-1,2-Dichloroethene	2,600	0.7 U	0.7	0.17	0.7 U	0.7	0.16	0.8 U	0.8	0.20
Chloroform	200	0.7 U	0.7	0.17	0.7 U	0.7	0.16	0.8 U	0.8	0.20
1,2-Dichloroethane	70	0.7 U	0.7	0.14	0.7 U	0.7	0.13	0.8 U	0.8	0.16
2-Butanone	430,000	**5.0**	3.6	0.37	**3.7**	3.3	0.34	**5.9**	4.2	0.43
1,1,1-Trichloroethane	1,900,000	0.7 U	0.7	0.16	0.7 U	0.7	0.15	0.8 U	0.8	0.19
Carbon Tetrachloride	21	0.7 U	0.7	0.15	0.7 U	0.7	0.14	0.8 U	0.8	0.18
Vinyl Acetate	---	3.6 U	3.6	0.28	3.3 U	3.3	0.25	4.2 U	4.2	0.32
Bromodichloromethane	89	0.7 U	0.7	0.18	0.7 U	0.7	0.17	0.8 U	0.8	0.21
1,2-Dichloropropane	92	0.7 U	0.7	0.12	0.7 U	0.7	0.11	0.8 U	0.8	0.14
cis-1,3-Dichloropropene	---	0.7 U	0.7	0.16	0.7 U	0.7	0.15	0.8 U	0.8	0.19
Trichloroethene	51	**0.4** J1	0.7	0.15	0.7 U	0.7	0.14	0.8 U	0.8	0.18
Dibromochloromethane	---	0.7 U	0.7	0.19	0.7 U	0.7	0.18	0.8 U	0.8	0.22
1,1,2-Trichloroethane	73	0.7 U	0.7	0.21	0.7 U	0.7	0.19	0.8 U	0.8	0.24
Benzene	93	**0.4** J1	0.7	0.21	**0.3** J1	0.7	0.20	**0.7** J1	0.8	0.25
trans-1,3-Dichloropropene	---	0.7 U	0.7	0.16	0.7 U	0.7	0.14	0.8 U	0.8	0.18
2-Chloroethylvinylether	---	3.6 U	3.6	0.20	3.3 U	3.3	0.18	4.2 U	4.2	0.23
Bromoform	---	0.7 U	0.7	0.22	0.7 U	0.7	0.20	0.8 U	0.8	0.25
4-Methyl-2-Pentanone (MIBK)	170,000	3.6 U	3.6	0.30	3.3 U	3.3	0.28	4.2 U	4.2	0.35
2-Hexanone	32,000	3.6 U	3.6	0.32	3.3 U	3.3	0.29	4.2 U	4.2	0.37
Tetrachloroethene	260	0.7 U	0.7	0.19	0.7 U	0.7	0.17	0.8 U	0.8	0.21
1,1,2,2-Tetrachloroethane	13	0.7 U	0.7	0.18	0.7 U	0.7	0.17	0.8 U	0.8	0.21
Toluene	100,000	**0.7** J1	0.7	0.11	**0.6** J1	0.7	0.10	**0.8** J1	0.8	0.13
Chlorobenzene	26,000	0.7 U	0.7	0.16	0.7 U	0.7	0.15	0.8 U	0.8	0.18
Ethylbenzene	230	0.7 U	0.7	0.15	0.7 U	0.7	0.13	0.8 U	0.8	0.17
Styrene	16,000,000	0.7 U	0.7	0.10	0.7 U	0.7	0.09	0.8 U	0.8	0.12
Trichlorofluoromethane	200,000	0.7 U	0.7	0.19	0.7 U	0.7	0.18	0.8 U	0.8	0.22
1,1,2-Trichloro-1,2,2-trifuoroethane	1,000,000,000	1.4 U	1.4	0.21	1.3 U	1.3	0.19	1.7 U	1.7	0.24
m,p-Xylene	160,000	0.7 U	0.7	0.28	0.7 U	0.7	0.26	0.8 U	0.8	0.33
o-Xylene	200,000	0.7 U	0.7	0.16	0.7 U	0.7	0.15	0.8 U	0.8	0.19
1,2-Dichlorobenzene	68,000	0.7 U	0.7	0.21	0.7 U	0.7	0.19	0.8 U	0.8	0.24
1,3-Dichlorobenzene	3,840	0.7 U	0.7	0.16	0.7 U	0.7	0.15	0.8 U	0.8	0.19
1,4-Dichlorobenzene	3,500	0.7 U	0.7	0.17	0.7 U	0.7	0.15	0.8 U	0.8	0.19
Acrolein	---	**2.9** J1	36	2.8	**4.2** J1	33	2.5	**7.6** J1	42	3.2
Methyl Iodide	---	0.7 U	0.7	0.16	**0.9**	0.7	0.14	0.8 U	0.8	0.18
Bromoethane	---	1.4 U	1.4	0.32	1.3 U	1.3	0.29	1.7 U	1.7	0.37
Acrylonitrile	---	3.6 U	3.6	0.75	3.3 U	3.3	0.68	4.2 U	4.2	0.86
1,1-Dichloropropene	---	0.7 U	0.7	0.23	0.7 U	0.7	0.21	0.8 U	0.8	0.26
Dibromomethane	---	0.7 U	0.7	0.11	0.7 U	0.7	0.10	0.8 U	0.8	0.12
1,1,1,2-Tetrachloroethane	---	0.7 U	0.7	0.17	0.7 U	0.7	0.15	0.8 U	0.8	0.19
1,2-Dibromo-3-chloropropane	---	3.6 U	3.6	0.42	3.3 U	3.3	0.39	4.2 U	4.2	0.49
1,2,3-Trichloropropane	---	1.4 U	1.4	0.37	1.3 U	1.3	0.34	1.7 U	1.7	0.43
trans-1,4-Dichloro-2-butene	---	3.6 U	3.6	0.32	3.3 U	3.3	0.29	4.2 U	4.2	0.36
1,3,5-Trimethylbenzene	800,000	0.7 U	0.7	0.18	0.7 U	0.7	0.17	0.8 U	0.8	0.21
1,2,4-Trimethylbenzene	800,000	0.7 U	0.7	0.17	0.7 U	0.7	0.15	0.8 U	0.8	0.19
Hexachlorobutadiene	---	3.6 U	3.6	0.30	3.3 U	3.3	0.27	4.2 U	4.2	0.34
Ethylene Dibromide	---	0.7 U	0.7	0.13	0.7 U	0.7	0.12	0.8 U	0.8	0.15

TABLE M-4
WOODEN BULKHEAD SOIL ANALYTICAL RESULTS
BOEING ISAACSON-THOMPSON
REMEDIAL INVESTIGATION

	Preliminary Cleanup Level	IT-WB-1 UM06A 03/12/2012			IT-WB-2 UM06B 03/12/2012			IT-WB-3-120312 UM06C 03/12/2012		
		Result	Reporting Limit	Detection Limit	Result	Reporting Limit	Detection Limit	Result	Reporting Limit	Detection Limit
Bromochloromethane	---	0.7 U	0.7	0.23	0.7 U	0.7	0.21	0.8 U	0.8	0.27
2,2-Dichloropropane	---	0.7 U	0.7	0.21	0.7 U	0.7	0.19	0.8 U	0.8	0.24
1,3-Dichloropropane	---	0.7 U	0.7	0.15	0.7 U	0.7	0.14	0.8 U	0.8	0.17
Isopropylbenzene	78,000	0.7 U	0.7	0.17	0.7 U	0.7	0.15	0.8 U	0.8	0.19
n-Propylbenzene	11,000	0.7 U	0.7	0.20	0.7 U	0.7	0.18	0.8 U	0.8	0.23
Bromobenzene	---	0.7 U	0.7	0.11	0.7 U	0.7	0.10	0.8 U	0.8	0.13
2-Chlorotoluene	---	0.7 U	0.7	0.22	0.7 U	0.7	0.2	0.8 U	0.8	0.25
4-Chlorotoluene	400,000	0.7 U	0.7	0.20	0.7 U	0.7	0.18	0.8 U	0.8	0.23
tert-Butylbenzene	---	0.7 U	0.7	0.22	0.7 U	0.7	0.20	0.8 U	0.8	0.26
sec-Butylbenzene	---	0.7 U	0.7	0.17	0.7 U	0.7	0.16	0.8 U	0.8	0.20
4-Isopropyltoluene	---	0.7 U	0.7	0.17	0.7 U	0.7	0.16	0.8 U	0.8	0.20
n-Butylbenzene	27,000	0.7 U	0.7	0.19	0.7 U	0.7	0.17	0.8 U	0.8	0.22
1,2,4-Trichlorobenzene	80	3.6 U	3.6	0.24	3.3 U	3.3	0.22	4.2 U	4.2	0.28
Naphthalene	2,100	3.6 U	3.6	0.31	3.3 U	3.3	0.29	4.2 U	4.2	0.36
1,2,3-Trichlorobenzene	---	3.6 U	3.6	0.22	3.3 U	3.3	0.20	4.2 U	4.2	0.25
SEMIVOLATILES (µg/kg)										
Method SW8270D										
Phenol	1,900,000	20 U	20	8.4	19 U	19	8.3	19 U	19	8.4
Bis-(2-Chloroethyl) Ether	---	20 U	20	3.3	19 U	19	3.2	19 U	19	3.2
2-Chlorophenol	---	20 U	20	2.3	19 U	19	2.3	19 U	19	2.3
1,3-Dichlorobenzene	3,840	20 U	20	2.6	19 U	19	2.5	19 U	19	2.5
1,4-Dichlorobenzene	3,500	20 U	20	2.8	19 U	19	2.7	19 U	19	2.8
Benzyl Alcohol	8,000,000	20 U	20	5.9	19 U	19	5.8	19 U	19	5.9
1,2-Dichlorobenzene	68,000	20 U	20	2.4	19 U	19	2.4	19 U	19	2.4
2-Methylphenol	250,000	20 U	20	5.1	19 U	19	5	19 U	19	5.1
2,2'-Oxybis(1-Chloropropane)	---	20 U	20	3.7	19 U	19	3.6	19 U	19	3.6
4-Methylphenol	41,000	39 U	39	6.5	38 U	38	6.4	39 U	39	6.4
N-Nitroso-Di-N-Propylamine	---	20 U	20	3.3	19 U	19	3.2	19 U	19	3.2
Hexachloroethane	---	20 U	20	2.9	19 U	19	2.8	19 U	19	2.8
Nitrobenzene	---	20 U	20	4	19 U	19	3.9	19 U	19	3.9
Isophorone	---	20 U	20	2.8	19 U	19	2.7	19 U	19	2.8
2-Nitrophenol	---	98 U	98	38	96 U	96	37	97 U	97	37
2,4-Dimethylphenol	95,000	39 UJ	39	3.4	38 UJ	38	3.3	39 UJ	39	3.3
Benzoic Acid	9,000	390 U	390	98	380 U	380	97	390 U	390	98
bis(2-Chloroethoxy) Methane	---	20 U	20	1.9	19 U	19	1.9	19 U	19	1.9
2,4-Dichlorophenol	---	200 U	200	21	190 U	190	21	190 U	190	21
1,2,4-Trichlorobenzene	80	20 U	20	3.4	19 U	19	3.3	19 U	19	3.4
Naphthalene	2,100	20 U	20	2.7	19 U	19	2.6	19 U	19	2.7
4-Chloroaniline	---	260 U	260	22	260 UJ	260	21	260 U	260	22
Hexachlorobutadiene	---	98 U	98	4.5	96 U	96	4.4	97 U	97	4.4
4-Chloro-3-methylphenol	740,000	98 U	98	15	96 U	96	14	97 U	97	15
2-Methylnaphthalene	320,000	20 U	20	3	19 U	19	2.9	19 U	19	3
Hexachlorocyclopentadiene	---	390 U	390	65	380 U	380	64	390 U	390	64
2,4,6-Trichlorophenol	---	98 U	98	22	96 U	96	21	**33** J1	97	22
2,4,5-Trichlorophenol	---	98 U	98	21	96 U	96	20	97 U	97	21
2-Chloronaphthalene	---	20 U	20	2.6	19 U	19	2.5	19 U	19	2.6
2-Nitroaniline	---	98 U	98	18	96 U	96	18	97 U	97	18
Dimethylphthalate	71	20 U	20	2.8	19 U	19	2.8	19 U	19	2.8
Acenaphthylene	---	20 U	20	5.6	19 U	19	5.5	19 U	19	5.5
3-Nitroaniline	---	98 U	98	22	96 U	96	22	97 U	97	22
Acenaphthene	230,000	20 U	20	3.2	19 U	19	3.1	19 U	19	3.2
2,4-Dinitrophenol	---	830 U	830	110	810 U	810	110	820 U	820	110
4-Nitrophenol	---	98 U	98	34	96 U	96	33	97 U	97	34
Dibenzofuran	80,000	20 U	20	4	19 U	19	3.9	19 U	19	4
2,6-Dinitrotoluene	---	98 U	98	30	96 U	96	29	97 U	97	30
2,4-Dinitrotoluene	---	98 U	98	19	96 U	96	19	97 U	97	19

TABLE M-4
WOODEN BULKHEAD SOIL ANALYTICAL RESULTS
BOEING ISAACSON-THOMPSON
REMEDIAL INVESTIGATION

	Preliminary Cleanup Level	IT-WB-1 UM06A 03/12/2012			IT-WB-2 UM06B 03/12/2012			IT-WB-3-120312 UM06C 03/12/2012		
		Result	Reporting Limit	Detection Limit	Result	Reporting Limit	Detection Limit	Result	Reporting Limit	Detection Limit
Diethylphthalate	178,000	49 U	49	36	48 U	48	35	48 U	48	35
4-Chlorophenyl-phenylether	---	20 U	20	5.2	19 U	19	5.1	19 U	19	5.1
Fluorene	150,000	20 U	20	4.2	19 U	19	4.2	19 U	19	4.2
4-Nitroaniline	---	98 U	98	37	96 U	96	36	97 U	97	37
4,6-Dinitro-2-Methylphenol	---	200 U	200	21	190 U	190	20	190 U	190	20
N-Nitrosodiphenylamine	204,000	20 U	20	5.3	19 U	19	5.2	19 U	19	5.2
4-Bromophenyl-phenylether	---	20 U	20	4.9	19 U	19	4.8	19 U	19	4.9
Hexachlorobenzene	---	20 U	20	4.2	19 U	19	4.1	19 U	19	4.1
Pentachlorophenol	---	200 U	200	47	190 U	190	46	190 U	190	47
Phenanthrene	---	**25**	20	3.5	**12** J1	19	3.5	**41**	19	3.5
Carbazole	50,000	20 U	20	2.6	19 U	19	2.6	19 U	19	2.6
Anthracene	1,600,000	20 U	20	4.4	19 U	19	4.3	19 U	19	4.3
Di-n-Butylphthalate	26,000	20 U	20	8	19 U	19	7.8	**11** J1	19	7.9
Fluoranthene	230,000	**53**	20	2.8	**53**	19	2.8	**23**	19	2.8
Pyrene	240,000	**47**	20	1.9	**34**	19	1.9	**20**	19	1.9
Butylbenzylphthalate	1,700	**13** J1	20	6	19 U	19	5.9	**13** J1	19	5.9
3,3'-Dichlorobenzidine	---	150 UJ	150	17	140 UJ	140	17	140 UJ	140	17
Benzo(a)anthracene	---	**17** J1	20	3.2	19 U	19	3.2	**16** J1	19	3.2
bis(2-Ethylhexyl)phthalate	56,600	**21** J1	24	14	24 U	24	14	**16** J1	24	14
Chrysene	---	**27**	20	3.7	**28**	19	3.6	**35**	19	3.6
Di-n-Octyl phthalate	---	20 UJ	20	5.7	19 UJ	19	5.6	19 UJ	19	5.6
Benzo(a)pyrene	---	**20**	20	5.3	19 U	19	5.2	**12** J1	19	5.3
Indeno(1,2,3-cd)pyrene	---	**18** J1	20	4.6	19 U	19	4.5	**13** J1	19	4.5
Dibenz(a,h)anthracene	---	20 U	20	4.2	19 U	19	4.1	19 U	19	4.2
Benzo(g,h,i)perylene	---	**29**	20	4.3	**12** J1	19	4.2	**14** J1	19	4.3
1-Methylnaphthalene	16,000	20 U	20	2.6	**10** J1	19	2.6	19 U	19	2.6
Total Benzofluoranthenes	---	**48**	20	2.7	**49**	19	2.6	**37**	19	2.7
cPAH TEQ	15	**29** J	NA	NA	**5** J	NA	NA	**19** J1	NA	NA
PAHs (µg/kg)										
Method SW8270D-SIM										
Naphthalene	2,100	**12** J	4.8	2.6	**4.2** J1	4.8	2.5	**13**	4.8	2.5
2-Methylnaphthalene	320,000	**9.8** J	4.8	1.5	**3.7** J1	4.8	1.5	**11**	4.8	1.5
1-Methylnaphthalene	16,000	**9.3**	4.8	1.7	**3.8** J1	4.8	1.6	**11**	4.8	1.6
Total Naphthalenes	---	**31.1** J	NA	NA	**11.7** J	NA	NA	**35**	NA	NA
Acenaphthylene	---	**3.3** J1	4.8	1.2	4.8 U	4.8	1.2	**3.6** J1	4.8	1.2
Acenaphthene	230,000	4.8 U	4.8	1.3	4.8 U	4.8	1.3	**5.7**	4.8	1.3
Fluorene	150,000	4.8 U	4.8	1.3	4.8 U	4.8	1.2	**3.4** J1	4.8	1.2
Phenanthrene	---	**18**	4.8	1.9	**16**	4.8	1.9	**34**	4.8	1.9
Anthracene	1,600,000	**3.7** J1	4.8	1.4	**4.7** J1	4.8	1.4	**6.3**	4.8	1.4
Fluoranthene	230,000	**36**	4.8	1.7	**56**	4.8	1.7	**42**	4.8	1.7
Pyrene	240,000	**30**	4.8	2.2	**35**	4.8	2.1	**36**	4.8	2.1
Benzo(a)anthracene	---	**18**	4.8	1.6	**9.2**	4.8	1.5	**18**	4.8	1.5
Chrysene	---	**27**	4.8	1.8	**32**	4.8	1.8	**32**	4.8	1.8
Benzo(a)pyrene	---	**43**	4.8	1.7	**14**	4.8	1.7	**22**	4.8	1.7
Indeno(1,2,3-cd)pyrene	---	**33**	4.8	3.4	**8.9**	4.8	3.3	**16**	4.8	3.3
Dibenz(a,h)anthracene	---	**20**	4.8	2.3	**4.3** J1	4.8	2.3	**4.8**	4.8	2.3
Benzo(g,h,i)perylene	---	**57**	4.8	3.0	**10**	4.8	2.9	**18**	4.8	2.9
Dibenzofuran	80,000	**4.4** J1	4.8	1.5	3.3 U	4.8	1.5	**6.7**	4.8	1.4
Total Benzofluoranthenes	---	**70**	4.8	1.8	**58**	4.8	1.8	**59**	4.8	1.8
cPAH TEQ	15	**57**	NA	NA	**22.4** J	NA	NA	**32**	NA	NA

TABLE M-4
WOODEN BULKHEAD SOIL ANALYTICAL RESULTS
BOEING ISAACSON-THOMPSON
REMEDIAL INVESTIGATION

	Preliminary Cleanup Level	IT-WB-1 UM06A 03/12/2012			IT-WB-2 UM06B 03/12/2012			IT-WB-3-120312 UM06C 03/12/2012		
		Result	Reporting Limit	Detection Limit	Result	Reporting Limit	Detection Limit	Result	Reporting Limit	Detection Limit
PCBs (µg/kg)										
Method SW8082										
Aroclor 1016	0.72	32 U	32	1.9	31 U	31	1.9	32 U	32	2.0
Aroclor 1242	0.72	32 U	32	2.3	31 U	31	2.3	32 U	32	2.4
Aroclor 1248	220	32 U	32	2.3	31 U	31	2.3	32 U	32	2.4
Aroclor 1254	0.29	32 U	32	2.3	31 U	31	2.3	32 U	32	2.4
Aroclor 1260	5.4	16 J1	32	2.3	31 U	31	2.3	24 J1	32	2.4
Aroclor 1221	---	32 U	32	2.3	31 U	31	2.3	32 U	32	2.4
Aroclor 1232	---	32 U	32	2.3	31 U	31	2.3	32 U	32	2.4
Total PCBs	1.8	ND	NA	NA	ND	NA	NA	ND	NA	NA
TOTAL PETROLEUM HYDROCARBONS (mg/kg)										
NWTPH-Dx										
Diesel-Range Organics	2,000	**160**	60	15	6.2 U	6.2	1.6	7.3 U	7.3	1.9
Motor Oil-Range Organics	2,000	**1400**	120	19	**15**	12	1.9	**15**	14	2.3
NWTPH-G										
Gasoline-Range Organics	100/30	5.2 U	5.2	2.5	5.3 U	5.3	2.5	7.2 U	7.2	3.4
TOTAL METALS (mg/kg)										
Methods 200.8/7471A/SW7196A										
Antimony	5	0.3 UJ	0.3	0.016	0.3 U	0.3	0.016	0.3 U	0.3	0.018
Arsenic	7	**5.6**	0.3	0.11	**5.5**	0.3	0.11	**7.6**	0.3	0.12
Barium	640	**31.1**	0.6	0.070	**33.1**	0.6	0.070	**40.7**	0.7	0.079
Beryllium	160	0.3 U	0.3	0.023	0.3 U	0.3	0.023	**0.3**	0.3	0.025
Cadmium	1.3	0.1 U	0.1	0.015	0.1 U	0.1	0.015	0.1 U	0.1	0.017
Chromium	1,480	**19**	3	0.24	**24.2**	0.6	0.048	**17.4**	0.7	0.053
Chromium VI	3.8	0.508 U	0.508	0.030	0.512 U	0.512	0.030	0.566 U	0.566	0.030
Copper	36	**26.7**	0.6	0.045	**25.2**	0.6	0.045	**19.8**	0.7	0.051
Lead	250	**32.3**	0.1	0.059	**82.7**	0.1	0.059	**11.6**	0.1	0.066
Mercury	1.5	**0.04**	0.03	0.0017	**0.03**	0.03	0.0014	**0.06**	0.03	0.0017
Nickel	210	**21.7**	0.6	0.062	**19.1**	0.6	0.062	**14.7**	0.7	0.069
Selenium	1.0	0.6 U	0.6	0.12	0.6 U	0.6	0.12	0.7 U	0.7	0.14
Silver	170	0.3 U	0.3	0.010	0.3 U	0.3	0.010	0.3 U	0.3	0.011
Thallium	0.67	0.3 U	0.3	0.0038	0.3 U	0.3	0.0038	0.3 U	0.3	0.0042
Zinc	1,400	**55**	5	0.43	**55**	5	0.43	**53**	6	0.48

ND = Not Detected.
NA = Not Applicable.
Bold = Detected compound.
Boxed = Exceeds Preliminary Cleanup Level
µg/kg = micrograms per kilogram
mg/kg = milligrams per kilogram

TEQ = Toxic Equivalent Concentration
SIM = Select Ion Monitoring
cPAH = Carcinogenic Polycyclic Aromatic Hydrocarbons
PCB = Polychlorinated Biphenyls
NWTPH-Dx = Total Petroleum Hydrocarbon-Diesel Range
NWTPH-G = Total Petroleum Hydrocarbon-Gasoline Range

U = Indicates the compound was not detected at or above the the reporting limit.
UJ = The analyte was not detected in the sample at a concentration at or above the reporting limit; the sample reporting limit is an estimate.
J = Indicates the analyte was positively identified; the associated numerical value is the approximate concentration of the analyte in the sample.
J1 = Laboratory flag indicating the analyte was positively identified; the associated concentration is approximate and less than the reporting limit, but equal to or greater than the detection limit.
UJ2 = The analyted was not detected in the sample at or above the numerical value shown; the numerical value is below the reporting limit, but greater than the detection limit.

APPENDIX N

Stormwater, Storm Drain Solids, Source Material Analytical Results

TABLE N-1
STORMWATER SAMPLING ANALYTICAL RESULTS
BOEING ISAACSON-THOMPSON
REMEDIAL INVESTIGATION

	Preliminary Cleanup Levels	IT-MH80 UM55A/UM58A 03/14/2012			IT-MH80 UR13B/UR28B 4/20/2012			IT-MH32 UM55B/UM58B 03/14/2012			IT-MH32 UR13A/UR28A 4/20/2012		
		Result	Reporting Limit	Detection Limit	Result	Reporting Limit	Detection Limit	Result	Reporting Limit	Detection Limit	Result	Reporting Limit	Detection Limit
VOLATILES (µg/L)													
Method SW8260C													
Chloromethane	10.3	0.5 U	0.5	0.10	0.5 U	0.5	0.10	0.5 U	0.5	0.10	0.5 U	0.5	0.10
Bromomethane	---	1.0 U	1.0	0.25	1.0 U	1.0	0.25	1.0 U	1.0	0.25	1.0 U	1.0	0.25
Vinyl Chloride	0.53	0.2 U	0.2	0.06	0.2 U	0.2	0.06	0.2 U	0.2	0.06	0.2 U	0.2	0.06
Chloroethane	21,000	0.2 U	0.2	0.09	0.2 U	0.2	0.09	0.2 U	0.2	0.09	0.2 U	0.2	0.09
Methylene Chloride	230	1.0 U	1.0	0.48	1.0 U	1.0	0.48	1.0 U	1.0	0.48	1.0 U	1.0	0.48
Acetone	110,000	5.0 U	5.0	2.1	**5.6**	5.0	2.1	5.0 U	5.0	2.1	**5.5**	5.0	2.1
Carbon Disulfide	3900	0.2 U	0.2	0.04	0.2 U	0.2	0.04	0.2 U	0.2	0.04	0.2 U	0.2	0.04
1,1-Dichloroethene	3.2	0.2 U	0.2	0.05	0.2 U	0.2	0.05	0.2 U	0.2	0.05	0.2 U	0.2	0.05
1,1-Dichloroethane	33	0.2 U	0.2	0.05	0.2 U	0.2	0.05	0.2 U	0.2	0.05	0.2 U	0.2	0.05
trans-1,2-Dichloroethene	940	0.2 U	0.2	0.05	0.2 U	0.2	0.05	0.2 U	0.2	0.05	0.2 U	0.2	0.05
cis-1,2-Dichloroethene	130	0.2 U	0.2	0.04	0.2 U	0.2	0.04	0.2 U	0.2	0.04	0.2 U	0.2	0.04
Chloroform	9.4	0.2 U	0.2	0.03	0.2 U	0.2	0.03	0.2 U	0.2	0.03	0.2 U	0.2	0.03
1,2-Dichloroethane	3.6	0.2 U	0.2	0.07	0.2 U	0.2	0.07	0.2 U	0.2	0.07	0.2 U	0.2	0.07
2-Butanone	73,000	5.0 U	5.0	0.81	**2.8** J1	5.0	0.81	5.0 U	5.0	0.81	5.0 U	5.0	0.81
1,1,1-Trichloroethane	46,000	0.2 U	0.2	0.04	0.2 U	0.2	0.04	0.2 U	0.2	0.04	0.2 U	0.2	0.04
Carbon Tetrachloride	0.46	0.2 U	0.2	0.04	0.2 U	0.2	0.04	0.2 U	0.2	0.04	0.2 U	0.2	0.04
Vinyl Acetate	---	0.2 U	0.2	0.07	0.2 U	0.2	0.07	0.2 U	0.2	0.07	0.2 U	0.2	0.07
Bromodichloromethane	17	0.2 U	0.2	0.05	0.2 U	0.2	0.05	0.2 U	0.2	0.05	0.2 U	0.2	0.05
1,2-Dichloropropane	3.7	0.2 U	0.2	0.04	0.2 U	0.2	0.04	0.2 U	0.2	0.04	0.2 U	0.2	0.04
cis-1,3-Dichloropropene	---	0.2 U	0.2	0.06	0.2 U	0.2	0.06	0.2 U	0.2	0.06	0.2 U	0.2	0.06
Trichloroethene	1.4	0.2 U	0.2	0.05	0.2 U	0.2	0.05	0.2 U	0.2	0.05	0.2 U	0.2	0.05
Dibromochloromethane	---	0.2 U	0.2	0.05	0.2 U	0.2	0.05	0.2 U	0.2	0.05	0.2 U	0.2	0.05
1,1,2-Trichloroethane	2.3	0.2 U	0.2	0.13	0.2 U	0.2	0.13	0.2 U	0.2	0.13	0.2 U	0.2	0.13
Benzene	2	0.2 U	0.2	0.03	0.2 U	0.2	0.03	0.2 U	0.2	0.03	0.2 U	0.2	0.03
trans-1,3-Dichloropropene	---	0.2 U	0.2	0.08	0.2 U	0.2	0.08	0.2 U	0.2	0.08	0.2 U	0.2	0.08
2-Chloroethylvinylether	---	1.0 U	1.0	0.25	1.0 U	1.0	0.25	1.0 U	1.0	0.25	1.0 U	1.0	0.25
Bromoform	---	0.2 U	0.2	0.06	0.2 U	0.2	0.06	0.2 U	0.2	0.06	0.2 U	0.2	0.06
4-Methyl-2-Pentanone (MIBK)	19,000	5.0 U	5.0	0.97	5.0 U	5.0	0.97	5.0 U	5.0	0.97	5.0 U	5.0	0.97
2-Hexanone	3200	5.0 U	5.0	0.90	5.0 U	5.0	0.90	5.0 U	5.0	0.90	5.0 U	5.0	0.90
Tetrachloroethene	3.3	0.2 U	0.2	0.05	0.2 U	0.2	0.05	0.2 U	0.2	0.05	0.2 U	0.2	0.05
1,1,2,2-Tetrachloroethane	0.33	0.2 U	0.2	0.06	0.2 U	0.2	0.06	0.2 U	0.2	0.06	0.2 U	0.2	0.06
Toluene	1300	**24**	0.2	0.04	**16**	0.2	0.04	0.2 U	0.2	0.04	**7.5**	0.2	0.04
Chlorobenzene	270	0.2 U	0.2	0.02	0.2 U	0.2	0.02	0.2 U	0.2	0.02	0.2 U	0.2	0.02
Ethylbenzene	1.7	0.2 U	0.2	0.04	0.2 U	0.2	0.04	0.2 U	0.2	0.04	0.2 U	0.2	0.04
Styrene	77,000	0.2 U	0.2	0.04	0.2 U	0.2	0.04	0.2 U	0.2	0.04	0.2 U	0.2	0.04
Trichlorofluoromethane	6900	0.2 U	0.2	0.04	0.2 U	0.2	0.04	0.2 U	0.2	0.04	0.2 U	0.2	0.04
1,1,2-Trichloro-1,2,2-trifuoroethane	59,000	0.2 U	0.2	0.04	0.2 U	0.2	0.04	0.2 U	0.2	0.04	0.2 U	0.2	0.04
m,p-Xylene	1300	0.4 U	0.4	0.05	0.4 U	0.4	0.05	0.4 U	0.4	0.05	0.4 U	0.4	0.05
o-Xylene	1600	0.2 U	0.2	0.04	0.2 U	0.2	0.04	0.2 U	0.2	0.04	0.2 U	0.2	0.04
1,2-Dichlorobenzene	440	0.2 U	0.2	0.04	0.2 U	0.2	0.04	0.2 U	0.2	0.04	0.2 U	0.2	0.04
1,3-Dichlorobenzene	960	0.2 U	0.2	0.04	0.2 U	0.2	0.04	0.2 U	0.2	0.04	0.2 U	0.2	0.04
1,4-Dichlorobenzene	1.7	0.2 U	0.2	0.04	0.2 U	0.2	0.04	0.2 U	0.2	0.04	0.2 U	0.2	0.04
Acrolein	---	5.0 U	5.0	2.5	5.0 U	5.0	2.5	5.0 U	5.0	2.5	5.0 U	5.0	2.5
Methyl Iodide	---	1.0 U	1.0	0.23	1.0 U	1.0	0.23	1.0 U	1.0	0.23	1.0 U	1.0	0.23
Bromoethane	---	0.2 U	0.2	0.04	0.2 U	0.2	0.04	0.2 U	0.2	0.04	0.2 U	0.2	0.04
Acrylonitrile	0.057	1.0 U	1.0	0.60	1.0 U	1.0	0.60	1.0 U	1.0	0.60	1.0 U	1.0	0.60
1,1-Dichloropropene	---	0.2 U	0.2	0.03	0.2 U	0.2	0.03	0.2 U	0.2	0.03	0.2 U	0.2	0.03
Dibromomethane	---	0.2 U	0.2	0.14	0.2 U	0.2	0.14	0.2 U	0.2	0.14	0.2 U	0.2	0.14
1,1,1,2-Tetrachloroethane	---	0.2 U	0.2	0.04	0.2 U	0.2	0.04	0.2 U	0.2	0.04	0.2 U	0.2	0.04
1,2-Dibromo-3-chloropropane	---	0.5 U	0.5	0.04	0.5 U	0.5	0.04	0.5 U	0.5	0.04	0.5 U	0.5	0.04
1,2,3-Trichloropropane	---	0.5 U	0.5	0.13	0.5 U	0.5	0.13	0.5 U	0.5	0.13	0.5 U	0.5	0.13
trans-1,4-Dichloro-2-butene	---	1.0 U	1.0	0.32	1.0 U	1.0	0.32	1.0 U	1.0	0.32	1.0 U	1.0	0.32
1,3,5-Trimethylbenzene	303	0.2 U	0.2	0.02	0.2 U	0.2	0.02	0.2 U	0.2	0.02	0.2 U	0.2	0.02
1,2,4-Trimethylbenzene	303	0.2 U	0.2	0.02	0.2 U	0.2	0.02	0.2 U	0.2	0.02	0.2 U	0.2	0.02
Hexachlorobutadiene	---	0.5 U	0.5	0.07	0.5 U	0.5	0.07	0.5 U	0.5	0.07	0.5 U	0.5	0.07
Ethylene Dibromide	---	0.2 U	0.2	0.08	0.2 U	0.2	0.08	0.2 U	0.2	0.08	0.2 U	0.2	0.08
Bromochloromethane	---	0.2 U	0.2	0.06	0.2 U	0.2	0.06	0.2 U	0.2	0.06	0.2 U	0.2	0.06
2,2-Dichloropropane	---	0.2 U	0.2	0.05	0.2 U	0.2	0.05	0.2 U	0.2	0.05	0.2 U	0.2	0.05
1,3-Dichloropropane	---	0.2 U	0.2	0.06	0.2 U	0.2	0.06	0.2 U	0.2	0.06	0.2 U	0.2	0.06
Isopropylbenzene	270	0.2 U	0.2	0.02	0.2 U	0.2	0.02	0.2 U	0.2	0.02	0.2 U	0.2	0.02
n-Propylbenzene	530	0.2 U	0.2	0.02	0.2 U	0.2	0.02	0.2 U	0.2	0.02	0.2 U	0.2	0.02
Bromobenzene	---	0.2 U	0.2	0.06	0.2 U	0.2	0.06	0.2 U	0.2	0.06	0.2 U	0.2	0.06
2-Chlorotoluene	---	0.2 U	0.2	0.02	0.2 U	0.2	0.02	0.2 U	0.2	0.02	0.2 U	0.2	0.02
4-Chlorotoluene	2600	0.2 U	0.2	0.02	0.2 U	0.2	0.02	0.2 U	0.2	0.02	0.2 U	0.2	0.02
tert-Butylbenzene	---	0.2 U	0.2	0.03	0.2 U	0.2	0.03	0.2 U	0.2	0.03	0.2 U	0.2	0.03
sec-Butylbenzene	---	0.2 U	0.2	0.02	0.2 U	0.2	0.02	0.2 U	0.2	0.02	0.2 U	0.2	0.02
4-Isopropyltoluene	---	0.2 U	0.2	0.03	0.2 U	0.2	0.03	0.2 U	0.2	0.03	0.2 U	0.2	0.03
n-Butylbenzene	780	0.2 U	0.2	0.02	0.2 U	0.2	0.02	0.2 U	0.2	0.02	0.2 U	0.2	0.02
1,2,4-Trichlorobenzene	1.13	0.5 U	0.5	0.11	0.5 U	0.5	0.11	0.5 U	0.5	0.11	0.5 U	0.5	0.11
Naphthalene	26	0.5 U	0.5	0.12	0.5 U	0.5	0.12	0.5 U	0.5	0.12	0.5 U	0.5	0.12
1,2,3-Trichlorobenzene	---	0.5 U	0.5	0.11	0.5 U	0.5	0.11	0.5 U	0.5	0.11	0.5 U	0.5	0.11
VOLATILES (µg/L)													
Method SW8260C-SIM													
Vinyl Chloride	0.53	0.020 U	0.020	0.0050	0.020 U	0.020	0.0050	0.020 U	0.020	0.0050	0.020 U	0.020	0.0050
Tetrachloroethene	3.3	0.020 U	0.020	0.0068	0.020 U	0.020	0.0068	0.020 U	0.020	0.0068	0.020 U	0.020	0.0068
SEMIVOLATILES (µg/L)													
Method SW8270D													
Phenol	41,000	1.0 U	1.0	0.52	1.0 U	1.0	0.52	1.0 U	1.0	0.52	1.0 U	1.0	0.52
Bis-(2-Chloroethyl) Ether	---	1.0 U	1.0	0.58	1.0 U	1.0	0.58	1.0 U	1.0	0.58	1.0 U	1.0	0.58
2-Chlorophenol	---	1.0 U	1.0	0.53	1.0 U	1.0	0.53	1.0 U	1.0	0.53	1.0 U	1.0	0.53
1,3-Dichlorobenzene	---	1.0 U	1.0	0.36	1.0 U	1.0	0.36	1.0 U	1.0	0.36	1.0 U	1.0	0.36
1,4-Dichlorobenzene	1.7	1.0 U	1.0	0.4	1.0 U	1.0	0.40	1.0 U	1.0	0.40	1.0 U	1.0	0.40
Benzyl Alcohol	182	5.0 U	5.0	2.0	5.0 U	5.0	2.0	5.0 U	5.0	2.0	5.0 U	5.0	2.0
1,2-Dichlorobenzene	440	1.0 U	1.0	0.36	1.0 U	1.0	0.36	1.0 U	1.0	0.36	1.0 U	1.0	0.36
2-Methylphenol	3100	**0.7** J1	1.0	0.53	**0.6** J1	1.0	0.53	1.0 U	1.0	0.53	1.0 U	1.0	0.53
2,2'-Oxybis(1-Chloropropane)	---	1.0 U	1.0	0.62	1.0 U	1.0	0.62	1.0 U	1.0	0.62	1.0 U	1.0	0.62
4-Methylphenol	330	1.0 U	1.0	0.52	1.0 U	1.0	0.52	1.0 U	1.0	0.52	1.0 U	1.0	0.52
N-Nitroso-Di-N-Propylamine	---	1.0 U	1.0	0.56	1.0 U	1.0	0.56	1.0 U	1.0	0.56	1.0 U	1.0	0.56
Hexachloroethane	---	1.0 U	1.0	0.35	1.0 U	1.0	0.35	1.0 U	1.0	0.35	1.0 U	1.0	0.35
Nitrobenzene	---	1.0 U	1.0	0.58	1.0 U	1.0	0.58	1.0 U	1.0	0.58	1.0 U	1.0	0.58
Isophorone	---	1.0 U	1.0	0.48	1.0 U	1.0	0.48	1.0 U	1.0	0.48	1.0 U	1.0	0.48
2-Nitrophenol	---	5.0 U	5.0	2.0	5.0 U	5.0	2.0	5.0 U	5.0	2.0	5.0 U	5.0	2.0
2,4-Dimethylphenol	660	1.0 U	1.0	0.36	1.0 U	1.0	0.36	1.0 U	1.0	0.36	1.0 U	1.0	0.36
Benzoic Acid	2,240	10 U	10	5.1	10 U	10	5.1	10 U	10	5.1	10 U	10	5.1
bis(2-Chloroethoxy) Methane	---	1.0 U	1.0	0.56	1.0 U	1.0	0.56	1.0 U	1.0	0.56	1.0 U	1.0	0.56
2,4-Dichlorophenol	---	5.0 U	5.0	2.6	5.0 U	5.0	2.6	5.0 U	5.0	2.6	5.0 U	5.0	2.6
1,2,4-Trichlorobenzene	1.13	1.0 U	1.0	0.38	1.0 U	1.0	0.38	1.0 U	1.0	0.38	1.0 U	1.0	0.38
Naphthalene	26	1.0 U	1.0	0.52	1.0 U	1.0	0.52	1.0 U	1.0	0.52	1.0 U	1.0	0.52
4-Chloroaniline	---	5.0 U	5.0	2.6	5.0 U	5.0	2.6	5.0 U	5.0	2.6	5.0 U	5.0	2.6
Hexachlorobutadiene	---	1.0 U	1.0	0.31	1.0 U	1.0	0.31	1.0 U	1.0	0.31	1.0 U	1.0	0.31
4-Chloro-3-methylphenol	3700	5.0 U	5.0	2.4	5.0 U	5.0	2.4	5.0 U	5.0	2.4	5.0 U	5.0	2.4
2-Methylnaphthalene	64	1.0 U	1.0	0.48	1.0 U	1.0	0.48	1.0 U	1.0	0.48	1.0 U	1.0	0.48
Hexachlorocyclopentadiene	---	5.0 U	5.0	1.2	5.0 U	5.0	1.2	5.0 U	5.0	1.2	5.0 U	5.0	1.2
2,4,6-Trichlorophenol	---	5.0 U	5.0	2.4	5.0 U	5.0	2.4	5.0 U	5.0	2.4	5.0 U	5.0	2.4
2,4,5-Trichlorophenol	---	5.0 U	5.0	2.2	5.0 U	5.0	2.2	5.0 U	5.0	2.2	5.0 U	5.0	2.2
2-Chloronaphthalene	---	1.0 U	1.0	0.48	1.0 U	1.0	0.48	1.0 U	1.0	0.48	1.0 U	1.0	0.48
2-Nitroaniline	---	5.0 U	5.0	2.6	5.0 U	5.0	2.6	5.0 U	5.0	2.6	5.0 U	5.0	2.6
Dimethylphthalate	1,100,000	1.0 U	1.0	0.53	1.0 U	1.0	0.53	1.0 U	1.0	0.53	1.0 U	1.0	0.53
Acenaphthylene	---	1.0 U	1.0	0.48	1.0 U	1.0	0.48	1.0 U	1.0	0.48	1.0 U	1.0	0.48
3-Nitroaniline	---	5.0 U	5.0	2.3	5.0 U	5.0	2.3	5.0 U	5.0	2.3	5.0 U	5.0	2.3
Acenaphthene	120	1.0 U	1.0	0.55	1.0 U	1.0	0.55	1.0 U	1.0	0.55	1.0 U	1.0	0.55
2,4-Dinitrophenol	---	10 U	10	3.5	10 U	10	3.5	10 U	10	3.5	10 U	10	3.5
4-Nitrophenol	---	5.0 U	5.0	2.6	5.0 U	5.0	2.6	5.0 U	5.0	2.6	5.0 U	5.0	2.6
Dibenzofuran	1.3	1.0 U	1.0	0.48	1.0 U	1.0	0.48	1.0 U	1.0	0.48	1.0 U	1.0	0.48
2,6-Dinitrotoluene	---	5.0 U	5.0	2.4	5.0 U	5.0	2.4	5.0 U	5.0	2.4	5.0 U	5.0	2.4
2,4-Dinitrotoluene	---	5.0 U	5.0	2.5	5.0 U	5.0	2.5	5.0 U	5.0	2.5	5.0 U	5.0	2.5
Diethylphthalate	4,236	1.0 U	1.0	0.58	1.0 U	1.0	0.58	1.0 U	1.0	0.58	1.0 U	1.0	0.58

TABLE N-1
STORMWATER SAMPLING ANALYTICAL RESULTS
BOEING ISAACSON-THOMPSON
REMEDIAL INVESTIGATION

	Preliminary Cleanup Levels	IT-MH80 UM55A/UM58A 03/14/2012			IT-MH80 UR13B/UR28B 4/20/2012			IT-MH32 UM55B/UM58B 03/14/2012			IT-MH32 UR13A/UR28A 4/20/2012		
		Result	Reporting Limit	Detection Limit	Result	Reporting Limit	Detection Limit	Result	Reporting Limit	Detection Limit	Result	Reporting Limit	Detection Limit
4-Chlorophenyl-phenylether	---	1.0 U	1.0	0.45	1.0 U	1.0	0.45	1.0 U	1.0	0.45	1.0 U	1.0	0.45
Fluorene	45	1.0 U	1.0	0.56	1.0 U	1.0	0.56	1.0 U	1.0	0.56	1.0 U	1.0	0.56
4-Nitroaniline	---	5.0 U	5.0	2.2	5.0 U	5.0	2.2	5.0 U	5.0	2.2	5.0 U	5.0	2.2
4,6-Dinitro-2-Methylphenol	---	10 U	10	3.1	10 U	10	3.1	10 U	10	3.1	10 U	10	3.1
N-Nitrosodiphenylamine	1.96	1.0 U	1.0	0.46	1.0 U	1.0	0.46	1.0 U	1.0	0.46	1.0 U	1.0	0.46
4-Bromophenyl-phenylether	---	1.0 U	1.0	0.42	1.0 U	1.0	0.42	1.0 U	1.0	0.42	1.0 U	1.0	0.42
Hexachlorobenzene	---	1.0 U	1.0	0.47	1.0 U	1.0	0.47	1.0 U	1.0	0.47	1.0 U	1.0	0.47
Pentachlorophenol	---	5.0 U	5.0	2.4	5.0 U	5.0	2.4	5.0 U	5.0	2.4	5.0 U	5.0	2.4
Phenanthrene	---	1.0 U	1.0	0.56	1.0 U	1.0	0.56	1.0 U	1.0	0.56	1.0 U	1.0	0.56
Carbazole	---	1.0 U	1.0	0.31	1.0 U	1.0	0.31	1.0 U	1.0	0.31	1.0 U	1.0	0.31
Anthracene	200	1.0 U	1.0	0.53	1.0 U	1.0	0.53	1.0 U	1.0	0.53	1.0 U	1.0	0.53
Di-n-Butylphthalate	47	1.0 U	1.0	0.54	1.0 U	1.0	0.54	1.0 U	1.0	0.54	1.0 U	1.0	0.54
Fluoranthene	11	1.0 U	1.0	0.52	1.0 U	1.0	0.52	1.0 U	1.0	0.52	1.0 U	1.0	0.52
Pyrene	9.8	1.0 U	1.0	0.55	1.0 U	1.0	0.55	1.0 U	1.0	0.55	1.0 U	1.0	0.55
Butylbenzylphthalate	0.41	1.0 U	1.0	0.56	1.0 U	1.0	0.56	1.0 U	1.0	0.56	1.0 U	1.0	0.56
3,3'-Dichlorobenzidine	---	5.0 U	5.0	1.5	5.0 U	5.0	1.5	5.0 U	5.0	1.5	5.0 U	5.0	1.5
Benzo(a)anthracene	0.0018	1.0 U	1.0	0.52	1.0 U	1.0	0.52	1.0 U	1.0	0.52	1.0 U	1.0	0.52
bis(2-Ethylhexyl)phthalate	1.2	**1.5**	1.0	1.9	1.0 U	1.0	1.9	**7.8**	1.0	1.9	**1.2**	1.0	1.9
Chrysene	0.018	1.0 U	1.0	0.55	1.0 U	1.0	0.55	1.0 U	1.0	0.55	1.0 U	1.0	0.55
Di-n-Octyl phthalate	---	1.0 U	1.0	0.51	1.0 U	1.0	0.51	1.0 U	1.0	0.51	1.0 U	1.0	0.51
Benzo(a)pyrene	0.00018	1.0 U	1.0	0.48	1.0 U	1.0	0.48	1.0 U	1.0	0.48	1.0 U	1.0	0.48
Indeno(1,2,3-cd)pyrene	0.0018	1.0 U	1.0	0.48	1.0 U	1.0	0.48	1.0 U	1.0	0.48	1.0 U	1.0	0.48
Dibenz(a,h)anthracene	0.0018	1.0 U	1.0	0.48	1.0 U	1.0	0.48	1.0 U	1.0	0.48	1.0 U	1.0	0.48
Benzo(g,h,i)perylene	---	1.0 U	1.0	0.55	1.0 U	1.0	0.55	1.0 U	1.0	0.55	1.0 U	1.0	0.55
1-Methylnaphthalene	2.3	1.0 U	1.0	0.48	1.0 U	1.0	0.48	1.0 U	1.0	0.48	1.0 U	1.0	0.48
Total Benzofluoranthenes	0.0018	1.0 U	1.0	0.48	1.0 U	1.0	0.48	1.0 U	1.0	0.48	1.0 U	1.0	0.48
cPAHs (µg/L)													
Method SW8270D-SIM													
Benzo(a)anthracene	0.0018	0.010 U	0.010	0.0063	0.010 U	0.010	0.0063	0.010 U	0.010	0.0063	0.010 U	0.010	0.0063
Chrysene	0.018	**0.0059** J1	0.010	0.0046	0.010 U	0.010	0.0046	**0.0083** J1	0.010	0.0046	**0.0052** J1	0.010	0.0046
Benzo(a)pyrene	0.00018	0.010 U	0.010	0.0048	0.010 U	0.010	0.0048	0.010 U	0.010	0.0048	0.010 U	0.010	0.0048
Indeno(1,2,3-cd)pyrene	0.0018	0.010 U	0.010	0.0046	0.010 U	0.010	0.0046	0.010 U	0.010	0.0046	0.010 U	0.010	0.0046
Dibenz(a,h)anthracene	0.0018	0.010 U	0.010	0.0048	0.010 U	0.010	0.0048	0.010 U	0.010	0.0048	0.010 U	0.010	0.0048
Total Benzofluoranthenes	0.0018	0.020 U	0.020	0.0099	0.020 U	0.020	0.0099	0.020 U	0.020	0.0099	0.020 U	0.020	0.0099
cPAH TEQ	0.00018	**0.0001** J	NA	NA	ND	NA	NA	**0.0001** J	NA	NA	**0.0001** J	NA	NA
PCBs (µg/L)													
Method SW8082													
Aroclor 1016	0.000023	0.010 U	0.010	0.0025	0.010 U	0.010	0.0025	0.010 U	0.010	0.0025	0.010 U	0.010	0.0025
Aroclor 1242	0.000023	0.010 U	0.010	0.0028	0.010 U	0.010	0.0028	0.010 U	0.010	0.0028	0.010 U	0.010	0.0028
Aroclor 1248	0.000023	0.010 U	0.010	0.0028	0.010 U	0.010	0.0028	0.010 U	0.010	0.0028	0.010 U	0.010	0.0028
Aroclor 1254	0.0000055	0.010 U	0.010	0.0028	0.010 U	0.010	0.0028	0.010 U	0.010	0.0028	0.010 U	0.010	0.0028
Aroclor 1260	0.000023	0.010 U	0.010	0.0028	0.010 U	0.010	0.0028	0.010 U	0.010	0.0028	0.010 U	0.010	0.0028
Aroclor 1221	---	0.010 U	0.010	0.0028	0.010 U	0.010	0.0028	0.010 U	0.010	0.0028	0.010 U	0.010	0.0028
Aroclor 1232	---	0.010 U	0.010	0.0028	0.010 U	0.010	0.0028	0.010 U	0.010	0.0028	0.010 U	0.010	0.0028
Total PCBs	0.000023	ND	NA	NA	ND	NA	NA	ND	NA	NA	ND	NA	NA
TOTAL PETROLEUM HYDROCARBONS (mg/L)													
NWTPH-Dx													
Diesel-Range Organics	0.5	0.10 U	0.10	0.02	0.10 U	0.10	0.02	0.10 U	0.10	0.02	0.10 U	0.10	0.02
Oil-Range Organics	0.5	0.20 U	0.20	0.04	0.20 U	0.20	0.04	0.20 U	0.20	0.04	0.20 U	0.20	0.04
NWTPH-G													
Gasoline-Range Organics	1.0/0.8	0.25 U	0.25	0.06	0.25 U	0.25	0.06	0.25 U	0.25	0.06	0.25 U	0.25	0.06
TOTAL METALS													
Methods 200.8/SW7196A (µg/L)													
Antimony	---	**0.8**	0.2	0.010	**0.2**	0.2	0.010	**1.1**	0.2	0.010	**0.3**	0.2	0.010
Arsenic	---	**0.4**	0.2	0.048	0.2 U	0.2	0.048	**0.3**	0.2	0.048	**0.4**	0.2	0.048
Barium	---	**3.1**	0.5	0.020	**2.9**	0.5	0.020	**2.4**	0.5	0.020	**4.2**	0.5	0.020
Beryllium	---	0.2 U	0.2	0.021	0.2 U	0.2	0.021	0.2 U	0.2	0.021	0.2 U	0.2	0.021
Cadmium	---	**0.1**	0.1	0.010	0.1 U	0.1	0.010	**0.3**	0.1	0.010	0.1 U	0.1	0.010
Chromium	---	0.5 U	0.5	0.045	0.5 U	0.5	0.045	**1.0**	0.5	0.045	**0.7**	0.5	0.045
Copper	---	**3.0**	0.5	0.158	**1.8**	0.5	0.158	**2.3**	0.5	0.158	**7.5**	0.5	0.158
Lead	---	**1.3**	0.1	0.046	**0.4**	0.1	0.046	**2.1**	0.1	0.046	**0.7**	0.1	0.046
Nickel	---	**1.4**	0.5	0.079	0.5 U	0.5	0.079	**0.5**	0.5	0.079	0.5 U	0.5	0.079
Selenium	---	0.5 U	0.5	0.127	0.5 U	0.5	0.127	0.5 U	0.5	0.127	0.5 U	0.5	0.127
Silver	---	0.2 U	0.2	0.008	0.2 U	0.2	0.008	0.2 U	0.2	0.008	0.2 U	0.2	0.008
Thallium	---	0.2 U	0.2	0.004	0.2 U	0.2	0.004	0.2 U	0.2	0.004	0.2 U	0.2	0.004
Zinc	---	**26**	4	0.50	**26**	4	0.50	**81**	4	0.50	**75**	4	0.50
Method SW7196A (mg/L)													
Chromium VI	0.00058	0.010 U	0.010	0.00300	0.010 U	0.010	0.00300	0.010 U	0.010	0.00300	0.010 U	0.010	0.00300
Method SW7470A (ng/L)													
Mercury	12	20.0 U	20.0	2.60	20.0 U	20.0	2.60	20.0 U	20.0	2.60	20.0 U	20.0	2.60
CONVENTIONALS (mg/L)													
Total Dissolved Solids (Method 160.1/SM2540C)	---	**14.5**	5.0	5.00	5.0 U	5.0	5.00	**6.0**	5.0	5.00	13	5.0	5.00
Total Suspended Solids (Method 160.2/SM2540D)	---	**2.3**	1.0	1.00	1.1 U	1.1	1.06	**5.4**	1.0	1.00	2.4	1.0	1.00

µg/L = micrograms per liter
mg/L = milligrams per liter
ng/L = nanograms per liter
TEQ = Toxic Equivalent Concentration
SIM = Select Ion Monitoring
Bold = Detected compound.
Box = Exceeds Preliminary Cleanup Level

PCB = Polychlorinated Biphenyls
NWTPH-Dx = Total Petroleum Hydrocarbon-Diesel Range
NWTPH-G = Total Petroleum Hydrocarbon-Gasoline Range
cPAH = Carcinogenic Polycyclic Aromatic Hydrocarbons

U = Indicates the compound was undetected at the reported concentration.
J = Indicates the analyte was positively identified; the associated numerical value is the approximate concentration of the analyte in the sample.
J1 = Laboratory flag indicating the analyte was positively identified; the associated concentration is approximate and less than the reporting limit, but equal to or greater than the detection limit.

TABLE N-2
2011 STORM DRAIN ANALYTICAL DATA
ISAACSON THOMPSON

	IT-CB8 TL74D 09/09/2011	IT-CB10 TL84F 09/12/2011	IT-CB11 TL84E 09/12/2011	IT-CB12 TL84D 09/12/2011	IT-CB13B/14 TL53K 09/08/2011	IT-CB17 TL74F 09/09/2011	IT-CB20 TL74C 09/09/2011	IT-CB24 TL74G 09/09/2011	IT-CB25 TL74H 09/09/2011	IT-CB26 TL74I 09/09/2011	IT-CB27 TL74E 09/09/2011	IT-CB28 TO80A 9/28/2011	IT-CB29 TL29B 09/07/2011	IT-CB30 TL29C 09/07/2011	IT-CB34 TL84A 09/12/2011	IT-CB35 TL84B 09/12/2011
TOTAL METALS (mg/kg)																
EPA200.8/SW7471A																
Antimony	0.3 U	0.2 U	0.2 U	0.4	0.5	0.3 U	0.2 U	1.1	0.4 U	0.9	0.2	2.0	3.0	1.2	0.2 U	0.3 UJ
Arsenic	14.1	33.9	17.2	32.4	9.6	7.9	9.0	13.1	11.7	14.1	10.8	19.3	58.0	18.3	5.7	15.2 J
Barium	122	65.4	66.4	95	139	83.1	104	169	138	179	164	122	197	224	44.5	347 J
Beryllium	0.3	0.2 U	0.3	0.4 U	0.3	0.3 U	0.3	0.6	0.4 U	0.4 U	0.3	0.5 U	0.5	0.5 U	0.2 U	0.3 U
Cadmium	1.9	0.8	1.3	2.5	1.6	2.7	4.3	25.2	13.8	17.3	15.5	23.7	38.1	9.0	2.1	7.3 J
Chromium	142	92.3	152	373	66.3	49.5	79.6	116	97.1	106	61.9	200	492	388	59	207 J
Copper	78.0	73.8	108	251	67.7	53.4	80.2	168	114	124	78.00	202	606	258	30.5	80.6 J
Lead	148	59.8	201	437	178	75.6	158	108	98.9	96.8	55.1	147	568	246	13.2	50.1 J
Mercury	0.63	0.07	0.11	0.15	0.31	0.04	0.07	0.11	0.18	0.12	0.12	1.57	0.72	0.23	0.03 U	0.02
Nickel	76.4	66.4	109	271	55.4	48.8	59.8	65	61.7	69	51.3	122	226	147	19.9	79.6 J
Selenium	0.8	0.6 U	0.5 U	1	0.7	0.7 U	0.6	1	0.9 U	1 U	0.5 U	1 U	3	2	0.6 U	0.9
Silver	0.3 U	0.2	0.2	0.5	0.3 U	0.3 U	0.2	1.0	1.1	0.5	0.3	0.7	1.9	1.1	0.2 U	0.3 U
Thallium	0.3 U	0.2 U	0.2 U	0.4 U	0.3 U	0.3 U	0.2 U	0.4 U	0.4 U	0.4 U	0.2 U	0.5 U	0.5 U	0.5 U	0.2 U	0.3 U
Zinc	880	278	640	1100	620	610	760	1120	1000	1530	1860	2390	6640	2240	132	384 J
TCLP METALS (mg/L)																
Arsenic																
Barium																
Cadmium																
Chromium																
Lead																
Mercury																
Selenium																
Silver																
PAHs (µg/kg)																
SW8270DSIM																
Naphthalene	87 U	220	90	190	160 J	59 U	78	75	58 U	14	61	760 J	110	46 U	47 U	
2-Methylnaphthalene	87 U	100 J	33 J	170	230 U	32 J	54	76	42 J	12 J	39	460 J	59	46 U	34 J	
1-Methylnaphthalene	87 U	140 U	29 J	73	230 U	59 U	41	46 J	31 J	7.8 J	20	320 J	53	46 U	47 U	
Acenaphthylene	87 U	140 U	25 J	58	230 U	59 U	35	60 U	58 U	14 U	24	440 J	84	46 U	47 U	
Acenaphthene	87 U	130 J	110	140	120 J	59 U	66	45 J	39 J	9.0 J	34	750 J	110	46 U	47 U	
Fluorene	87 U	140	120	190	140 J	59 U	80	50 J	45 J	13 J	59	1100 J	150	46 U	47 U	
Phenanthrene	260	940	2000	1500	1300	370	800	570	440	190	780	9600	1900	46 U	140	
Anthracene	87 U	120 J	130	120	140 J	37 J	69	73	41 J	19	74	1300 J	270	46 U	47 U	
Fluoranthene	350	1200	2800	1900	1300	700	1200	880	660	370	1200	15000	3000	29 J	170	
Pyrene	300	1200	2000	1300	1100	580	880	740	480	290	900	12000	2600	26 J	170	
Benzo(a)anthracene	130	380	730	430	470	220	310	290	170	120	350	3900	1000	46 U	40 J	
Chrysene	300	740	1200	1100	860	480	560	600	350	210	630	8400	3400	100	250	
Benzo(a)pyrene	120	340	800	550	420	230	340	280	200	140	370	4800	1000	46 U	75	
Indeno(1,2,3-cd)pyrene	69 J	300	550	460	320	120	200	200	110	72	260	3700	970	46 U	56	
Dibenz(a,h)anthracene	87 U	77 J	140	120	230 U	69	51	39 J	58 U	20	84	1100 J	250	46 U	52	
Benzo(g,h,i)perylene	140	480	640	560	430	220	260	280	160	99	300	3900	950	67	120	
Dibenzofuran	87 U	120 J	69	160	230 U	59 U	67	50 J	47 J	12 J	65	760 J	120	46 U	47 U	
Total Benzofluoranthenes	320	780	1700	1400	810	550	780	650	500	300	780	12000	4200	46 U	150	
cPAH TEQ	175	501	1124	802	589	331	480	404	282	193	524	6954	1676	1.0	107	
SVOCs (µg/kg)																
SW8270D																
Phenol	62 J	280 U	280 U	300	470 U	120	280 U	300 U	190 J	90 U	170 J	320	180	94 U	120 J	
Bis-(2-Chloroethyl) Ether	110 U	280 U	280 U	220 U	470 U	94 U	280 U	300 U	290 U	90 U	230 U	59 U	59 U	94 U	180 U	
2-Chlorophenol	110 U	280 U	280 U	220 U	470 U	94 U	280 U	300 U	290 U	90 U	230 U	59 U	59 U	94 U	180 U	
1,3-Dichlorobenzene	110 U	280 U	280 U	220 U	470 U	94 U	280 U	300 U	290 U	90 U	230 U	59 U	59 U	94 U	180 U	
1,4-Dichlorobenzene	110 U	280 U	280 U	220 U	470 U	94 U	280 U	300 U	290 U	90 U	230 U	59 U	59 U	94 U	180 U	
Benzyl Alcohol	56 J	280 U	280 U	240	240 J	16000	840	520	550	110	310	150	130	94 U	140 J	
1,2-Dichlorobenzene	110 U	280 U	280 U	220 U	470 U	94 U	280 U	300 U	290 U	90 U	230 U	59 U	59 U	94 U	180 U	
2-Methylphenol	110 U	280 U	280 U	220 U	470 U	94 U	280 U	300 U	290 U	90 U	230 U	59 U	59 U	94 U	180 U	
2,2'-Oxybis(1-Chloropropane)	110 U	280 U	280 U	220 U	470 U	94 U	280 U	300 U	290 U	90 U	230 U	59 U	59 U	94 U	180 U	
4-Methylphenol	230	560 U	570 U	760	570 J	85 J	260 J	190 J	320 J	180 U	990	500	140	190 U	410	

TABLE N-2
2011 STORM DRAIN ANALYTICAL DATA
ISAACSON THOMPSON

	IT-CB8 TL74D 09/09/2011	IT-CB10 TL84F 09/12/2011	IT-CB11 TL84E 09/12/2011	IT-CB12 TL84D 09/12/2011	IT-CB13B/14 TL53K 09/08/2011	IT-CB17 TL74F 09/09/2011	IT-CB20 TL74C 09/09/2011	IT-CB24 TL74G 09/09/2011	IT-CB25 TL74H 09/09/2011	IT-CB26 TL74I 09/09/2011	IT-CB27 TL74E 09/09/2011	IT-CB28 TO80A 9/28/2011	IT-CB29 TL29B 09/07/2011	IT-CB30 TL29C 09/07/2011	IT-CB34 TL84A 09/12/2011	IT-CB35 TL84B 09/12/2011
SVOCs Con't																
N-Nitroso-Di-N-Propylamine	110 U	280 U	280 U	220 U	470 U		94 U	280 U	300 U	290 U	90 U	230 U	59 U	59 U	94 U	180 U
Hexachloroethane	110 U	280 U	280 U	220 U	470 U		94 U	280 U	300 U	290 U	90 U	230 U	59 U	59 U	94 U	180 U
Nitrobenzene	110 U	280 U	280 U	220 U	470 U		94 U	280 U	300 U	290 U	90 U	230 U	59 U	59 U	94 U	180 U
Isophorone	110 U	280 U	280 U	220 U	470 U		94 U	280 U	300 U	290 U	90 U	230 U	59 U	59 U	94 U	180 U
2-Nitrophenol	560 U	1400 U	1400 U	1100 U	2400 U		470 U	1400 U	1500 U	1500 U	450 U	1200 U	300 U	300 U	470 U	910 U
2,4-Dimethylphenol	220 U	560 U	570 U	440 U	950 U		190 U	570 U	600 U	580 U	180 U	460 U	120 U	120 U	190 U	360 U
Benzoic Acid	2200 U	5600 U	5700 U	**1400** J	9500 UJ		**560** J	5700 U	6000 U	5800 U	1800 U	4600 U	**770** J	**590** J	1900 U	**1600** J
bis(2-Chloroethoxy) Methane	110 U	280 U	280 U	220 U	470 U		94 U	280 U	300 U	290 U	90 U	230 U	59 U	59 U	94 U	180 U
2,4-Dichlorophenol	1100 U	2800 U	2800 U	2200 U	4700 U		940 U	2800 U	3000 U	2900 U	900 U	2300 U	590 U	590 U	940 U	1800 U
1,2,4-Trichlorobenzene	110 U	280 U	280 U	220 U	470 U		94 U	280 U	300 U	290 U	90 U	230 U	59 U	59 U	94 U	180 U
Naphthalene	110 U	**690**	**2600**	**150** J	470 U		**47** J	280 U	300 U	290 U	90 U	230 U	**370**	**120**	94 U	180 U
4-Chloroaniline	1500 U	3800 U	3800 U	3000 U	6400 U		1300 U	3800 U	4000 U	3900 U	1200 U	3100 U	800 U	800 U	1300 U	2500 U
Hexachlorobutadiene	560 U	1400 U	1400 U	1100 U	2400 U		470 U	1400 U	1500 U	1500 U	450 U	1200 U	300 U	300 U	470 U	910 U
4-Chloro-3-methylphenol	560 U	1400 U	1400 U	1100 U	2400 U		470 U	1400 U	1500 U	1500 U	450 U	1200 U	300 U	300 U	470 U	910 U
2-Methylnaphthalene	110 U	**210** J	**850**	**120** J	470 U		94 U	280 U	300 U	290 U	90 U	230 U	**200**	**59**	94 U	**110** J
Hexachlorocyclopentadiene	2200 U	5600 U	5700 U	4400 U	9500 U		1900 U	5700 U	6000 U	5800 U	1800 U	4600 U	1200 U	1200 U	1900 U	3600 U
2,4,6-Trichlorophenol	560 U	1400 U	1400 U	1100 U	2400 U		470 U	1400 U	1500 U	1500 U	450 U	1200 U	300 U	300 U	470 U	910 U
2,4,5-Trichlorophenol	560 U	1400 U	1400 U	1100 U	2400 U		470 U	1400 U	1500 U	1500 U	450 U	1200 U	300 U	300 U	470 U	910 U
2-Chloronaphthalene	110 U	280 U	280 U	220 U	470 U		94 U	280 U	300 U	290 U	90 U	230 U	59 U	59 U	94 U	180 U
2-Nitroaniline	560 U	1400 U	1400 U	1100 U	2400 U		470 U	1400 U	1500 U	1500 U	450 U	1200 U	300 U	300 U	470 U	910 U
Dimethylphthalate	110 U	280 U	280 U	220 U	470 U		**94**	**230** J	**160** J	**260** J	**160**	**290**	**1500**	**450**	94 U	180 U
Acenaphthylene	110 U	280 U	280 U	220 U	470 U		94 U	280 U	300 U	290 U	90 U	230 U	**300**	**97**	94 U	180 U
3-Nitroaniline	560 U	1400 U	1400 U	1100 U	2400 U		470 U	1400 U	1500 U	1500 U	450 U	1200 U	300 U	300 U	470 U	910 U
Acenaphthene	110 U	**350**	**1300**	220 U	470 U		94 U	280 U	300 U	290 U	90 U	230 U	**220**	**150**	94 U	180 U
2,4-Dinitrophenol	4800 U	12000 U	12000 U	9300 U	20000 U		4000 U	12000 U	13000 U	12000 U	3800 U	9800 U	2500 U	2500 U	4000 U	7800 U
4-Nitrophenol	560 U	1400 U	1400 U	1100 U	2400 U		470 U	1400 U	1500 U	1500 U	450 U	1200 U	300 U	300 U	470 U	910 U
Dibenzofuran	110 U	**350**	**1100**	**130** J	470 U		94 U	280 U	300 U	290 U	90 U	230 U	**320**	**130**	94 U	180 U
2,6-Dinitrotoluene	560 U	1400 U	1400 U	1100 U	2400 U		470 U	1400 U	1500 U	1500 U	450 U	1200 U	300 U	300 U	470 U	910 U
2,4-Dinitrotoluene	560 U	1400 U	1400 U	1100 U	2400 U		470 U	1400 U	1500 U	1500 U	450 U	1200 U	300 U	300 U	470 U	910 U
Diethylphthalate	280 U	700 U	710 U	550 U	1200 U		240 U	710 U	750 U	730 U	230 U	580 U	150 U	150 U	230 U	460 U
4-Chlorophenyl-phenylether	110 U	280 U	280 U	220 U	470 U		94 U	280 U	300 U	290 U	90 U	230 U	59 UJ	59 UJ	94 U	180 U
Fluorene	110 U	**390**	**1300**	**120** J	470 U		94 U	280 U	300 U	290 U	90 U	230 U	**400**	**200**	94 U	**91** J
4-Nitroaniline	560 U	1400 U	1400 U	1100 U	2400 U		470 U	1400 U	1500 U	1500 U	450 U	1200 U	300 U	300 U	470 U	910 U
4,6-Dinitro-2-Methylphenol	1100 U	2800 U	2800 U	2200 U	4700 U		940 U	2800 U	3000 U	2900 U	900 U	2300 U	590 U	590 U	940 U	1800 UJ
N-Nitrosodiphenylamine	110 U	280 U	280 U	220 U	470 U		94 U	280 U	300 U	290 U	90 U	230 U	59 U	59 U	94 U	180 U
4-Bromophenyl-phenylether	110 U	280 U	280 U	220 U	470 U		94 U	280 U	300 U	290 U	90 U	230 U	59 U	59 U	94 U	180 U
Hexachlorobenzene	110 U	280 U	280 U	220 U	470 U		94 U	280 U	300 U	290 U	90 U	230 U	59 U	59 U	94 U	180 U
Pentachlorophenol	1100 U	2800 U	2800 U	2200 U	4700 U		940 U	2800 U	3000 U	2900 U	900 U	2300 U	590 U	590 U	940 U	1800 U
Phenanthrene	**260**	**2900**	**6800**	**1100**	**1700**		**390**	**680**	**630**	**610**	**190**	**700**	**4700**	**2100**	94 U	**680**
Carbazole	110 U	**450**	**1000**	**210** J	**330** J		**66** J	280 U	300 U	290 U	90 U	**140** J	**1200**	**500**	94 U	**130** J
Anthracene	110 U	**440**	**1400**	220 U	**260** J		94 U	280 U	300 U	290 U	90 U	230 U	**540**	**360**	94 U	180 U
Di-n-Butylphthalate	110 U	280 U	280 U	**430**	470 U		**410**	**360**	**510**	**600**	**380**	**800**	**610**	**110**	94 U	180 U
Fluoranthene	**410**	**3000**	**5400**	**1600**	**2200**		**820**	**970**	**960**	**830**	**370**	**900**	**8900**	**3400**	94 U	**1000**
Pyrene	**340**	**2300**	**4100**	**1200**	**1800**		**650**	**770**	**820**	**670**	**310**	**720**	**7100**	**2700**	94 U	**790**
Butylbenzylphthalate	**160**	**350** J	280 U	**470** J	470 U		**450**	**3100**	**1500**	**1400**	**750**	**1100**	**2200**	**1100**	94 U	**310** J
3,3'-Dichlorobenzidine	850 U	2100 U	2100 U	1600 U	3600 U		710 U	2100 U	2200 U	2200 U	680 U	1700 U	450 U	440 U	700 U	1400 U
Benzo(a)anthracene	**110** J	**830**	**1600**	**340**	**690**		**190**	**270** J	**250** J	**220** J	**95**	**200** J	**1800**	**1100**	94 U	**250**
bis(2-Ethylhexyl)phthalate	**3300**	**720**	**880**	**3000**	**4700**		**9800**	**6000**	**5000**	**11000**	**3700**	**3500**	**13000**	**2300**	**210**	**3000**
Chrysene	**350**	**1300**	**1900**	**1100**	**1100**		**630**	**560**	**570**	**510**	**220**	**520**	**4800**	**3700**	**110**	**760**
Di-n-Octyl phthalate	**500**	280 U	280 U	220 U	470 U		**3000**	**500**	**430**	**230** J	**54** J	**240**	59 U	59 U	94 U	**130** J
Benzo(a)pyrene	**140**	**720**	**1100**	**520**	**760**		**300**	**380**	**340**	**280** J	**140**	**280**	**2800**	**1300**	94 U	**360**
Indeno(1,2,3-cd)pyrene	**90** J	**420**	**510**	**370**	**400** J		**160**	**210** J	**210** J	**190** J	**81** J	**220** J	**1900**	**980**	94 U	**290**
Dibenz(a,h)anthracene	110 U	**140** J	**280**	**130** J	470 U		94 U	280 U	300 U	290 U	90 U	230 U	**580**	**310**	94 U	180 U
Benzo(g,h,i)perylene	**120**	**530**	**580**	**470**	**500**		**280**	**310**	**310**	**230** J	**120**	**280**	**1900**	**860**	**56** J	**410**
1-Methylnaphthalene	110 U	280 U	**440**	220 U	470 U		94 U	280 U	300 U	290 U	90 U	230 U	**110**	**41** J	94 U	180 U
Total Benzofluoranthenes	**360**	**1600**	**2000**	**1300**	**1300**		**820**	**870**	**730**	**660**	**330**	**700**	**7300**	**4700**	**66** J	**870**

TABLE N-2
2011 STORM DRAIN ANALYTICAL DATA
ISAACSON THOMPSON

	IT-CB8 TL74D 09/09/2011	IT-CB10 TL84F 09/12/2011	IT-CB11 TL84E 09/12/2011	IT-CB12 TL84D 09/12/2011	IT-CB13B/14 TL53K 09/08/2011	IT-CB17 TL74F 09/09/2011	IT-CB20 TL74C 09/09/2011	IT-CB24 TL74G 09/09/2011	IT-CB25 TL74H 09/09/2011	IT-CB26 TL74I 09/09/2011	IT-CB27 TL74E 09/09/2011	IT-CB28 TO80A 9/28/2011	IT-CB29 TL29B 09/07/2011	IT-CB30 TL29C 09/07/2011	IT-CB34 TL84A 09/12/2011	IT-CB35 TL84B 09/12/2011
TOTAL PETROLEUM HYDROCARBONS (mg/kg)																
NWTPH-Dx																
Diesel-Range Organics	**310**	**200**	130 U	**290**	**380**		**160**	**190**	**120**	**68**	**72**	**110**	**290**	110 U	**41**	**29** J
Lube Oil	**3700**	**1400**	**1300**	**1600**	**3700**		**2500**	**1500**	**860**	**580**	**620**	**640**	**2000**	**560**	**540**	**310** J
NWTPH-Gx																
Gasoline Range Organics	**31**	8.4 U	12 U	24 U	**81**		6.0 U	55 U	52 U	69 U	6.6 U	26 U	110 U	20 U	9.1 U	11 U
PCBs (µg/kg)																
SW8082																
Aroclor 1016	18 U	19 U	18 U	20 U	39 U	20 U	19 U	19 UJ	19 U	19 U	20 U	19 U	19 U	19 U	19 U	19 U
Aroclor 1242	18 U	19 U	18 U	20 U	39 U	20 U	19 U	19 UJ	19 U	19 U	20 U	19 U	19 U	19 U	19 U	19 U
Aroclor 1248	**49**	56 U	230 U	250 U	**82**	**38** J	**50**	**28** J	19 U	19 U	**50**	**42**	170 U	75 U	19 U	**23**
Aroclor 1254	**120**	**150**	**600**	**720**	**170**	**89** J	**120**	**100** J	**44**	**43**	**170**	**90**	**480**	**180**	**12** J	**42**
Aroclor 1260	**140** J	**140** P	**190**	**210**	**120**	**65** J	**120** J	**49** J	**64** J	**55** J	**68** J	**74**	**410**	**91**	**14** J	**42**
Aroclor 1221	18 U	19 U	18 U	20 U	39 U	20 U	19 U	19 UJ	19 U	19 U	20 U	19 U	19 U	19 U	19 U	19 U
Aroclor 1232	18 U	19 U	18 U	20 U	39 U	20 U	19 U	19 UJ	19 U	19 U	20 U	19 U	19 U	19 U	19 U	19 U
Total PCBs	**309** J	**290** P	**790**	**930**	**372**	**192** J	**290** J	**177** J	**108** J	**98** J	**288** J	**206**	**890**	**271**	**26** J	**107**
VOCs (µg/kg)																
SW8260C																
Chloromethane	1.3 U	1.5 UJ	3.1 U	2.1 U	1.6 UJ		1.2 U	1.9 U	1.7 U	1.8 U	1.3 U	2.1 U	2.4 U	2.7 UJ	1.1 U	6.9 U
Bromomethane	1.3 UJ	1.5 UJ	3.1 U	2.1 U	1.6 UJ		1.2 UJ	1.9 UJ	1.7 UJ	1.8 UJ	1.3 U	2.1 U	2.4 UJ	2.7 UJ	1.1 U	6.9 U
Vinyl Chloride	1.3 U	1.5 UJ	3.1 U	2.1 U	1.6 UJ		1.2 U	1.9 U	1.7 U	1.8 U	1.3 U	2.1 U	2.4 U	2.7 UJ	1.1 U	6.9 U
Chloroethane	1.3 U	1.5 UJ	3.1 U	2.1 U	1.6 UJ		1.2 U	1.9 U	1.7 U	**69** J	1.3 U	2.1 U	2.4 U	2.7 UJ	1.1 U	6.9 U
Methylene Chloride	2.6 U	**1.5** J	**3.4** J	4.1 U	3.1 UJ		**1.3** J	3.8 U	3.4 U	3.7 U	**2.4** J	4.2 U	4.7 U	**4.9** J	**0.9** J	14 U
Acetone	**270** J	**210** J	**1600** J	**410** J	**200** J		**230** J	**710** J	**230** J	**430** J	**370** J	**170**	**590** J	**640** J	5.6 U	**110** J
Carbon Disulfide	**13**	**150** J	**4.8**	**13**	**2.1** J		**2.4**	**9.6**	**4.7**	**8.9**	**1.5**	2.1 U	**7.4** J	**15** J	1.1 U	**11**
1,1-Dichloroethene	1.3 U	1.5 UJ	3.1 U	2.1 U	1.6 UJ		1.2 U	1.9 U	1.7 U	1.8 U	1.3 U	2.1 U	2.4 U	2.7 UJ	1.1 U	6.9 U
1,1-Dichloroethane	1.3 U	1.5 UJ	3.1 U	2.1 U	1.6 UJ		1.2 U	1.9 U	1.7 U	**27**	1.3 U	2.1 U	2.4 U	2.7 UJ	1.1 U	6.9 U
trans-1,2-Dichloroethene	1.3 U	1.5 UJ	3.1 U	2.1 U	1.6 UJ		1.2 U	1.9 U	1.7 U	1.8 U	1.3 U	2.1 U	2.4 U	2.7 UJ	1.1 U	6.9 U
cis-1,2-Dichloroethene	**1.7**	1.5 UJ	3.1 U	2.1 U	1.6 UJ		1.2 U	1.9 U	1.7 U	1.8 U	1.3 U	2.1 U	2.4 U	2.7 UJ	1.1 U	6.9 U
Chloroform	1.3 U	1.5 UJ	3.1 U	2.1 U	1.6 UJ		1.2 U	1.9 U	1.7 U	1.8 U	1.3 U	2.1 U	2.4 U	2.7 UJ	1.1 U	6.9 U
1,2-Dichloroethane	1.3 U	1.5 UJ	3.1 UJ	2.1 UJ	1.6 UJ		1.2 U	1.9 U	1.7 U	1.8 U	1.3 U	2.1 U	2.4 UJ	2.7 UJ	1.1 UJ	6.9 UJ
2-Butanone	**47**	**34** J	**210**	**110**	**40** J		**37**	**160**	**58**	**110**	**71**	**35**	**140**	**95** J	5.6 U	**29** J
1,1,1-Trichloroethane	1.3 U	1.5 UJ	3.1 U	2.1 U	1.6 UJ		1.2 U	1.9 U	1.7 U	1.8 U	1.3 U	2.1 U	2.4 U	2.7 UJ	1.1 U	6.9 U
Carbon Tetrachloride	1.3 U	1.5 UJ	3.1 U	2.1 U	1.6 UJ		1.2 U	1.9 U	1.7 U	1.8 U	1.3 U	2.1 U	2.4 U	2.7 UJ	1.1 U	6.9 UJ
Vinyl Acetate	6.5 U	7.3 UJ	16 U	10 U	7.9 UJ		6.2 U	9.4 U	8.4 U	9.1 U	6.5 U	11 U	12 U	13 UJ	5.6 U	34 U
Bromodichloromethane	1.3 U	1.5 UJ	3.1 U	2.1 U	1.6 UJ		1.2 U	1.9 U	1.7 U	1.8 U	1.3 U	2.1 U	2.4 U	2.7 UJ	1.1 U	6.9 U
1,2-Dichloropropane	1.3 U	1.5 UJ	3.1 U	2.1 U	1.6 UJ		1.2 U	1.9 U	1.7 U	1.8 U	1.3 U	2.1 U	2.4 U	2.7 UJ	1.1 U	6.9 U
cis-1,3-Dichloropropene	1.3 U	1.5 UJ	3.1 U	2.1 U	1.6 UJ		1.2 U	1.9 U	1.7 U	1.8 U	1.3 U	2.1 U	2.4 U	2.7 UJ	1.1 U	6.9 U
Trichloroethene	**0.7** J	1.5 UJ	3.1 U	2.1 U	1.6 UJ		1.2 U	1.9 U	1.7 U	1.8 U	1.3 U	2.1 U	2.4 U	2.7 UJ	1.1 U	6.9 U
Dibromochloromethane	1.3 U	1.5 UJ	3.1 U	2.1 U	1.6 UJ		1.2 U	1.9 U	1.7 U	1.8 U	1.3 U	2.1 U	2.4 U	2.7 UJ	1.1 U	6.9 U
1,1,2-Trichloroethane	1.3 U	1.5 UJ	3.1 U	2.1 U	1.6 UJ		1.2 U	1.9 U	1.7 U	1.8 U	1.3 U	2.1 U	2.4 U	2.7 UJ	1.1 U	6.9 U
Benzene	**2.4**	**1.8** J	**2.6** J	2.1 U	1.6 UJ		1.2 U	1.9 U	1.7 U	1.8 U	**1.4**	2.1 U	2.4 U	**2.3** J	1.1 U	6.9 U
trans-1,3-Dichloropropene	1.3 U	1.5 UJ	3.1 U	2.1 U	1.6 UJ		1.2 U	1.9 U	1.7 U	1.8 U	1.3 U	2.1 U	2.4 U	2.7 UJ	1.1 U	6.9 U
2-Chloroethylvinylether	6.5 U	7.3 UJ	16 U	10 U	7.9 UJ		6.2 U	9.4 U	8.4 U	9.1 U	6.5 U	11 U	12 U	13 UJ	5.6 U	34 U
Bromoform	1.3 U	1.5 UJ	3.1 U	2.1 U	1.6 UJ		1.2 U	1.9 U	1.7 U	1.8 U	1.3 U	2.1 U	2.4 U	2.7 UJ	1.1 U	6.9 U
4-Methyl-2-Pentanone (MIBK)	**13**	**9.9** J	**34**	10 U	7.9 UJ		**9.8**	**5.3** J	8.4 U	9.1 U	**18**	11 U	12 U	**29** J	5.6 U	34 U
2-Hexanone	6.5 U	7.3 UJ	16 U	10 U	7.9 UJ		6.2 U	9.4 U	8.4 U	9.1 U	6.5 U	11 U	12 U	13 UJ	5.6 U	34 U
Tetrachloroethene	1.3 U	1.5 UJ	3.1 U	2.1 U	1.6 UJ		1.2 U	1.9 U	1.7 U	1.8 U	1.3 U	2.1 U	2.4 U	2.7 UJ	1.1 U	6.9 U
1,1,2,2-Tetrachloroethane	1.3 U	1.5 UJ	3.1 U	2.1 U	1.6 UJ		1.2 U	1.9 U	1.7 U	1.8 U	1.3 U	2.1 U	2.4 U	2.7 UJ	1.1 U	6.9 U
Toluene	**8500**	**8.1** J	**4.9**	**89**	**3200** J		**0.7** J	**130**	**34**	**76**	**1.6**	**1000**	**22**	**2.4** J	1.1 U	**640** J
Chlorobenzene	1.3 U	1.5 UJ	3.1 U	2.1 U	1.6 UJ		1.2 U	**2.3**	1.7 U	**1.0** J	1.3 U	2.1 U	2.4 U	2.7 UJ	1.1 U	6.9 U
Ethylbenzene	**5.8**	**1.8** J	3.1 U	**3.0**	**8.5** J		1.2 U	**6.3**	**3.0**	**8.6**	1.3 U	**1.6** J	**9.0**	2.7 UJ	1.1 U	**23**
Styrene	1.3 U	1.5 UJ	3.1 U	2.1 U	1.6 UJ		1.2 U	**1.0** J	1.7 U	1.8 U	1.3 U	2.1 U	2.4 U	2.7 UJ	1.1 U	6.9 U
Trichlorofluoromethane	1.3 U	1.5 UJ	3.1 U	2.1 U	1.6 UJ		1.2 U	1.9 U	1.7 U	1.8 U	1.3 U	2.1 U	2.4 U	2.7 UJ	1.1 U	6.9 U
1,1,2-Trichloro-1,2,2-trifluoroethane	2.6 U	2.9 UJ	6.2 U	4.1 U	3.1 UJ		2.5 U	3.8 U	**0.9** J	3.7 U	**25** J	**3300**	4.7 U	5.4 UJ	2.2 U	14 U
m, p-Xylene	**18**	**5.1** J	3.1 U	**3.9**	**33** J		1.2 U	**4.5**	**2.1**	**9.3**	**0.9** J	**2.3**	**3.5**	2.7 UJ	1.1 U	**12**
o-Xylene	**6.3**	**2.7** J	3.1 U	**1.4** J	**26** J		1.2 U	**2.6**	**1.3** J	**4.8**	1.3 U	**1.1** J	**2.8**	2.7 UJ	1.1 U	6.9 U
1,2-Dichlorobenzene	1.3 U	1.5 UJ	3.1 U	2.1 U	**4.4** J		1.2 U	1.9 U	1.7 U	1.8 U	1.3 U	2.1 U	2.4 U	2.7 UJ	1.1 U	6.9 U
1,3-Dichlorobenzene	1.3 U	1.5 UJ	3.1 U	2.1 U	1.6 UJ		1.2 U	1.9 U	1.7 U	1.8 U	1.3 U	2.1 U	2.4 U	2.7 UJ	1.1 U	6.9 U
1,4-Dichlorobenzene	1.3 U	1.5 UJ	3.1 U	2.1 U	**1.1** J		1.2 U	1.9 U	1.7 U	1.8 U	1.3 U	2.1 U	2.4 U	2.7 UJ	1.1 U	6.9 U

TABLE N-2
2011 STORM DRAIN ANALYTICAL DATA
ISAACSON THOMPSON

	IT-CB8 TL74D 09/09/2011	IT-CB10 TL84F 09/12/2011	IT-CB11 TL84E 09/12/2011	IT-CB12 TL84D 09/12/2011	IT-CB13B/14 TL53K 09/08/2011	IT-CB17 TL74F 09/09/2011	IT-CB20 TL74C 09/09/2011	IT-CB24 TL74G 09/09/2011	IT-CB25 TL74H 09/09/2011	IT-CB26 TL74I 09/09/2011	IT-CB27 TL74E 09/09/2011	IT-CB28 TO80A 9/28/2011	IT-CB29 TL29B 09/07/2011	IT-CB30 TL29C 09/07/2011	IT-CB34 TL84A 09/12/2011	IT-CB35 TL84B 09/12/2011
VOCs Con't																
Acrolein	65 U	73 UJ	160 U	100 U	79 UJ		62 U	94 U	84 U	91 U	65 U	110 U	120 U	130 UJ	56 U	340 UJ
Methyl Iodide	1.3 U	1.5 UJ	3.1 U	2.1 U	1.6 UJ		1.2 U	1.9 U	1.7 U	1.8 U	**1.3**	2.1 U	2.4 U	2.7 UJ	1.1 U	6.9 U
Bromoethane	2.6 U	2.9 UJ	6.2 U	4.1 U	3.1 UJ		2.5 U	3.8 U	3.4 U	3.7 U	2.6 U	4.2 U	4.7 U	5.4 UJ	2.2 U	14 U
Acrylonitrile	6.5 U	7.3 UJ	16 U	10 U	7.9 UJ		6.2 U	9.4 U	8.4 U	9.1 U	6.5 U	11 U	12 U	13 UJ	5.6 U	34 U
1,1-Dichloropropene	1.3 U	1.5 UJ	3.1 U	2.1 U	1.6 UJ		1.2 U	1.9 U	1.7 U	1.8 U	1.3 U	2.1 U	2.4 U	2.7 UJ	1.1 U	6.9 U
Dibromomethane	1.3 U	1.5 UJ	3.1 U	2.1 U	1.6 UJ		1.2 U	1.9 U	1.7 U	1.8 U	1.3 U	2.1 U	2.4 U	2.7 UJ	1.1 U	6.9 U
1,1,1,2-Tetrachloroethane	1.3 U	1.5 UJ	3.1 U	2.1 U	1.6 UJ		1.2 U	1.9 U	1.7 U	1.8 U	1.3 U	2.1 U	2.4 U	2.7 UJ	1.1 U	6.9 U
1,2-Dibromo-3-chloropropane	6.5 U	7.3 UJ	16 U	10 U	7.9 UJ		6.2 U	9.4 U	8.4 U	9.1 U	6.5 U	11 U	12 U	13 UJ	5.6 U	34 U
1,2,3-Trichloropropane	2.6 U	2.9 UJ	6.2 U	4.1 U	3.1 UJ		2.5 U	3.8 U	3.4 U	3.7 U	2.6 U	4.2 U	4.7 U	5.4 UJ	2.2 U	14 U
trans-1,4-Dichloro-2-butene	6.5 U	7.3 UJ	16 U	10 U	7.9 UJ		6.2 U	9.4 U	8.4 U	9.1 U	6.5 U	11 U	12 U	13 UJ	5.6 U	34 U
1,3,5-Trimethylbenzene	**1.4**	**9.1** J	3.1 U	**1.3** J	1.6 UJ		1.2 U	**2.4**	1.7 U	**2.7**	1.3 U	2.1 U	**2.4**	2.7 UJ	1.1 U	**7.2**
1,2,4-Trimethylbenzene	**2.2**	**21** J	3.1 U	**2.5**	**2.2** J		1.2 U	**2.6**	**1.4** J	**4.5**	1.3 U	2.1 U	**3.5**	2.7 UJ	1.1 U	**21**
Hexachlorobutadiene	6.5 UJ	7.3 UJ	16 U	10 U	7.9 UJ		6.2 UJ	9.4 UJ	8.4 UJ	9.1 UJ	6.5 U	11 U	12 U	13 UJ	5.6 U	34 UJ
Ethylene Dibromide	1.3 U	1.5 UJ	3.1 U	2.1 U	1.6 UJ		1.2 U	1.9 U	1.7 U	1.8 U	1.3 U	2.1 U	2.4 U	2.7 UJ	1.1 U	6.9 U
Bromochloromethane	1.3 U	1.5 UJ	3.1 U	2.1 U	1.6 UJ		1.2 U	1.9 U	1.7 U	1.8 U	1.3 U	2.1 U	2.4 U	2.7 UJ	1.1 U	6.9 U
2,2-Dichloropropane	1.3 U	1.5 UJ	3.1 U	2.1 U	1.6 UJ		1.2 U	1.9 U	1.7 U	1.8 U	1.3 U	2.1 U	2.4 U	2.7 UJ	1.1 U	6.9 U
1,3-Dichloropropane	1.3 U	1.5 UJ	3.1 U	2.1 U	1.6 UJ		1.2 U	1.9 U	1.7 U	1.8 U	1.3 U	2.1 U	2.4 U	2.7 UJ	1.1 U	6.9 U
Isopropylbenzene	1.3 U	1.5 UJ	3.1 U	2.1 U	**1.3** J		1.2 U	1.9 U	1.7 U	1.8 U	1.3 U	2.1 U	**1.3** J	2.7 UJ	1.1 U	6.9 U
n-Propylbenzene	**1.0** J	**3.0** J	3.1 U	2.1 U	1.6 UJ		1.2 U	1.9 U	1.7 U	1.8 U	1.3 U	2.1 U	2.4 U	2.7 UJ	1.1 U	**9.7**
Bromobenzene	1.3 U	1.5 UJ	3.1 U	2.1 U	1.6 UJ		1.2 U	1.9 U	1.7 U	1.8 U	1.3 U	2.1 U	2.4 U	2.7 UJ	1.1 U	6.9 U
2-Chlorotoluene	1.3 U	1.5 UJ	3.1 U	2.1 U	1.6 UJ		1.2 U	1.9 U	1.7 U	1.8 U	1.3 U	2.1 U	2.4 U	2.7 UJ	1.1 U	6.9 U
4-Chlorotoluene	1.3 U	1.5 UJ	3.1 U	2.1 U	1.6 UJ		1.2 U	1.9 U	1.7 U	1.8 U	1.3 U	2.1 U	2.4 U	2.7 UJ	1.1 U	6.9 U
tert-Butylbenzene	1.3 U	1.5 UJ	3.1 U	2.1 U	1.6 UJ		1.2 U	1.9 U	1.7 U	1.8 U	1.3 U	2.1 U	2.4 U	2.7 UJ	1.1 U	6.9 U
sec-Butylbenzene	1.3 U	1.5 UJ	3.1 U	2.1 U	1.6 UJ		1.2 U	1.9 U	1.7 U	1.8 U	1.3 U	2.1 U	2.4 U	2.7 UJ	1.1 U	6.9 U
4-Isopropyltoluene	**1.2** J	**1.3** J	3.1 U	**8.6**	**1.8** J		1.2 U	**2.9**	**1.7** J	1.8 U	1.3 U	2.1 U	2.4 U	2.7 UJ	1.1 U	6.9 U
n-Butylbenzene	1.3 U	1.6 U	3.1 U	2.1 U	1.6 UJ		1.2 U	1.9 U	1.7 U	1.8 U	1.3 U	2.1 U	2.4 U	2.7 UJ	1.1 U	6.9 U
1,2,4-Trichlorobenzene	6.5 U	7.3 UJ	16 U	10 U	7.9 UJ		6.2 U	9.4 U	8.4 U	9.1 U	6.5 U	11 U	12 U	13 UJ	5.6 U	34 UJ
Naphthalene	6.5 U	7.3 UJ	16 U	10 U	7.9 UJ		6.2 U	9.4 U	8.4 U	9.1 U	6.5 U	11 U	**5.1** J	13 UJ	5.6 U	240 UJ
1,2,3-Trichlorobenzene	6.5 U	7.3 UJ	16 U	10 U	7.9 UJ		6.2 U	9.4 U	8.4 U	9.1 U	6.5 U	11 U	12 U	13 UJ	5.6 U	34 UJ
CONVENTIONALS																
Total Organic Carbon (%)	**11.6**	**6.40**	**9.03**	**13.0**	**13.6**	**11.1**	**11.2**	**11.5**	**12.2**	**9.64**	**4.25**	**13.4**	**10.9**	**12.3**	**3.53**	**5.03**
Total Solids (%)	**70.90**	**80.80**	**95.80**	**43.70**	**69.20**	**71.80**	**92.30**	**46.50**	**54.60**	**48.00**	**97.50**	**36.10**	**43.20**	**47.80**	**80.10**	**73.90**
Hexavalent Chrome (mg/kg)	0.551 U	0.482 U	0.408 U	0.894 U	0.567 U	0.544 U	0.423 U	0.837 U	0.713 U	0.817 U	0.399 U	1.08 U	0.915 U	0.824 U	0.488 U	0.531 UJ
DIOXIN/FURAN (pg/g)																
EPA 1613B																
1,2,3,4,6,7,8-HpCDD																
1,2,3,4,6,7,8-HpCDF																
1,2,3,4,7,8,9-HpCDF																
1,2,3,4,7,8-HxCDD																
1,2,3,4,7,8-HxCDF																
1,2,3,6,7,8-HxCDD																
1,2,3,6,7,8-HxCDF																
1,2,3,7,8,9-HxCDD																
1,2,3,7,8,9-HxCDF																
1,2,3,7,8-PeCDD																
1,2,3,7,8-PeCDF																
2,3,4,6,7,8-HxCDF																
2,3,4,7,8-PeCDF																
2,3,7,8-TCDD																
2,3,7,8-TCDF																
OCDD																
OCDF																
Total HpCDD																
Total HpCDF																
Total HxCDD																
Total HxCDF																
Total PeCDD																
Total PeCDF																
Total TCDD																
Total TCDF																
D/F TEQ																

TABLE N-2
2011 STORM DRAIN ANALYTICAL DATA
ISAACSON THOMPSON

	IT-CB36 TL74B 09/09/2011	IT-CB39/86/85 TL74A 09/09/2011	IT-CB60/61 TL29G 09/07/2011	IT-CB63 TL29F 09/07/2011	IT-CB66/67 TL29I 09/07/2011	IT-CB81/82 TL53B 09/08/2011	IT-CB83 TL53D 09/08/2011	IT-CB90/91 TL53C 09/08/2011	IT-CB90B TL53J 09/08/2011	IT-CBA TL29A 09/07/2011	IT-CBB/62/68 TL29H 09/07/2011	IT-CBC TL53G 09/08/2011	IT-CBD TL53H 09/08/2011	IT-CBE/77/77B TL53I 09/08/2011	IT-CG72 TL53A 09/08/2011	IT-CG74 TL29D 09/07/2011	IT-OWS23 TL53L 09/08/2011
TOTAL METALS (mg/kg)																	
EPA200.8/SW7471A																	
Antimony	0.3 U	0.4 UJ	0.3 U	0.5 U	0.4 U	0.3 U	0.5 U	0.2 U	0.3 U	0.7	0.3 U	0.7	1.0 J	0.3 U	0.4 U	0.7	0.7
Arsenic	8.2	13.1	7.0	12.9	14.3	6.5	18.8	4.6	8.3	14.3	6.5	12.5	12.3	8.2	6.8	9.6	18.4
Barium	150	119	125	169	229	118	157	125	122	181	90.8	185	140	152	140	175	545
Beryllium	0.3	0.4 U	0.3 U	0.5 U	0.4	0.3 U	0.5	0.2 U	0.3	0.3	0.3 U	0.3 U	0.5 U	0.3 U	0.5	0.6 U	0.5 U
Cadmium	2.1	13.0	3.0	5.7	11.7	6.6	14.7	4.8	1.3	17.1	7.2	117	154 J	39.5	14.8	18.4	7.2
Chromium	45.8	128 J	107	165	128	61.2	152	37.7	77.9	90.5	100	170	158 J	72.9	134	198	284
Copper	50.2	110	156	207	242	74.4	233	99.0	80.1	117	76.9	224	190	84.4	208	218	312
Lead	41.4	168 J	261	393	299	51.3	175	31.1	125	119	370	308	245	96.4	292	377	268
Mercury	0.04	0.09	0.08	0.24	1.16	0.05	0.17	0.03	0.07	0.08	0.04	0.13	0.27 J	0.17	0.15	0.20	0.22
Nickel	54.4	87	53.9	87	87	47.6	86	45.1	71.8	67.5	40.3	92.9	145	65.8	64.9	101	127
Selenium	0.7	1	0.8 U	1 U	1 U	0.7 U	1	0.6 U	0.8 U	0.7 U	0.7 U	0.8 U	1 U	0.7 U	0.9 U	1 U	2
Silver	0.3 U	0.5	0.8	1.3	2.9	0.3 U	0.7	0.2 U	0.3 U	0.4	0.3	1.5	1.9	0.3	0.7	0.8	0.6
Thallium	0.3 U	0.4 U	0.3 U	0.5 U	0.4 U	0.3 U	0.5 U	0.2 U	0.3 U	0.3 U	0.3 U	0.3 U	0.5 U	0.3 U	0.4 U	0.6 U	0.5 U
Zinc	380	1050	1680	1240	2400	359	1460	265	2060	1370	960	2240	2090	860	1400	1650	3390
TCLP METALS (mg/L)																	
Arsenic																	0.2 U
Barium																	2.92 U
Cadmium																	0.04
Chromium																	0.02 U
Lead																	0.1
Mercury																	0.0001 U
Selenium																	0.2 U
Silver																	0.02 U
PAHs (µg/kg)																	
SW8270DSIM																	
Naphthalene	98 U	230	67	92	170	34	62	19 J	89 J	51	49	100	190 J	57	110	270	220
2-Methylnaphthalene	98 U	81 J	38	64	120	33	43	17 J	90 J	43	33	88	180	40	78	120	130 J
1-Methylnaphthalene	98 U	94 J	30	58	61	26	43	15 J	140 U	29	24 J	61	190	51	83	110	130 J
Acenaphthylene	98 U	140 U	20 J	26 J	37	11 J	22 J	29 U	140 U	21 J	28 U	31 J	180	110	64 U	50 J	200 U
Acenaphthene	98 U	85 J	50	75	94	16	58	25 J	78 J	52	52	74	180	280	130	280	140 J
Fluorene	98 U	130 J	65	120	110	31	40	43	92 J	80	46	120	230 J	290	190	370	190 J
Phenanthrene	180	1600	680	1300	1500	320	570	280	570	590	540	960	830	3200	1400	2500	1400
Anthracene	98 U	140 U	86	110	150	28	72	36	140 U	76	67	94	220 J	360	170	410	160 J
Fluoranthene	210	1900	1200	2100	2700	440	870	410	920	790	1000	1600	1200	5800	2000	2800	2100
Pyrene	240	1400	880	1600	2300	320	610	320	700	570	810	1200	890	4400	1400	2100	1600
Benzo(a)anthracene	120	280	340	550	760	120	210	140	270	260	390	400	420	2200	560	890	590
Chrysene	330	910	650	1100	1600	240	520	220	650	460	720	820	700	2500	980	1200	1500
Benzo(a)pyrene	140	410	400	620	1100	130	240	120	280	260	390	390	420	2200	530	780	600
Indeno(1,2,3-cd)pyrene	98 U	250	290	430	730	96	150	68	180	180	250	320	260 J	970	320	440	450
Dibenz(a,h)anthracene	98 U	140 J	80	140	190	36	39	23 J	110 J	56	71	110	160	260	78	160	130 J
Benzo(g,h,i)perylene	130	420	370	530	840	140	160	89	340	310	300	500	290	900	340	600	760
Dibenzofuran	98 U	150	50	98	110	28	50	20 J	140 U	46	41	78	180 J	140	110	200	130 J
Total Benzofluoranthenes	280	940	920	1500	2600	310	590	270	730	580	760	1100	960	4200	1200	1600	1600
cPAH TEQ	183	580	570	893	1544	189	344	172	416	372	544	591	607	2988	756	1101	892
SVOCs (µg/kg)																	
SW8270D																	
Phenol	120 U	200	290 U	280 J	470	290 U	160 J	82	250 J	150	110 J	440	220 J	100 J	270	210 J	500
Bis-(2-Chloroethyl) Ether	120 U	180 U	290 U	300 U	58 U	290 U	290 U	78 U	500 U	56 U	170 U	290 U	240 U	170 U	130 U	300 U	500 U
2-Chlorophenol	120 U	180 U	290 U	300 U	58 U	290 U	290 U	78 U	500 U	56 U	170 U	290 U	240 U	170 U	130 U	300 U	500 U
1,3-Dichlorobenzene	120 U	180 U	290 U	300 U	58 U	290 U	290 U	78 U	500 U	56 U	170 U	290 U	240 U	170 U	130 U	300 U	500 U
1,4-Dichlorobenzene	120 U	180 U	290 U	300 U	58 U	290 U	290 U	78 U	500 U	56 U	170 U	290 U	240 U	170 U	130 U	300 U	500 U
Benzyl Alcohol	120 U	180 U	6500	1000	790	290 U	290 U	78 U	500 U	210	280	2500	3500	1900	390	860	7200
1,2-Dichlorobenzene	120 U	180 U	290 U	300 U	58 U	290 U	290 U	78 U	500 U	56 U	170 U	290 U	240 U	170 U	130 U	300 U	500 U
2-Methylphenol	120 U	180 U	290 U	300 U	58 U	290 U	290 U	78 U	500 U	56 U	170 U	290 U	240 U	170 U	130 U	300 U	500 U
2,2'-Oxybis(1-Chloropropane)	120 U	180 U	290 U	300 U	58 U	290 U	290 U	78 U	500 U	56 U	170 U	290 U	240 U	170 U	130 U	300 U	500 U
4-Methylphenol	67 J	540	200 J	330 J	220	580 U	580 U	82 J	3100	110	330 U	190 J	220 J	110 J	200 J	180 J	11000

TABLE N-2
2011 STORM DRAIN ANALYTICAL DATA
ISAACSON THOMPSON

	IT-CB36 TL74B 09/09/2011	IT-CB39/86/85 TL74A 09/09/2011	IT-CB60/61 TL29G 09/07/2011	IT-CB63 TL29F 09/07/2011	IT-CB66/67 TL29I 09/07/2011	IT-CB81/82 TL53B 09/08/2011	IT-CB83 TL53D 09/08/2011	IT-CB90/91 TL53C 09/08/2011	IT-CB90B TL53J 09/08/2011	IT-CBA TL29A 09/07/2011	IT-CBB/62/68 TL29H 09/07/2011	IT-CBC TL53G 09/08/2011	IT-CBD TL53H 09/08/2011	IT-CBE/77/77B TL53I 09/08/2011	IT-CG72 TL53A 09/08/2011	IT-CG74 TL29D 09/07/2011	IT-OWS23 TL53L 09/08/2011
SVOCs Con't																	
N-Nitroso-Di-N-Propylamine	120 U	180 U	290 U	300 U	58 U	290 U	290 U	78 U	500 U	56 U	170 U	290 U	240 U	170 U	130 U	300 U	500 U
Hexachloroethane	120 U	180 U	290 U	300 U	58 U	290 U	290 U	78 U	500 U	56 U	170 U	290 U	240 U	170 U	130 U	300 U	500 U
Nitrobenzene	120 U	180 U	290 U	300 U	58 U	290 U	290 U	78 U	500 U	56 U	170 U	290 U	240 U	170 U	130 U	300 U	500 U
Isophorone	120 U	180 U	290 U	300 U	**34** J	290 U	290 U	78 U	500 U	56 U	170 U	290 U	240 U	170 U	130 U	300 U	500 U
2-Nitrophenol	610 U	920 U	1400 U	1500 U	290 U	1500 U	1400 U	390 U	2500 U	280 U	840 U	1500 U	1200 U	840 U	670 U	1500 U	2500 U
2,4-Dimethylphenol	240 U	370 U	580 U	590 U	120 U	580 U	580 U	160 U	1000 U	110 U	330 U	590 U	470 U	330 U	270 U	610 U	1000 U
Benzoic Acid	2400 U	**1400** J	5800 UJ	5900 UJ	1200 UJ	5800 UJ	5800 UJ	1600 UJ	10000 UJ	**330** J	3300 UJ	5900 UJ	4700 UJ	3300 UJ	2700 UJ	6100 UJ	10000 UJ
bis(2-Chloroethoxy) Methane	120 U	180 U	290 U	300 U	58 U	290 U	290 U	78 U	500 U	56 U	170 U	290 U	240 U	170 U	130 U	300 U	500 U
2,4-Dichlorophenol	1200 U	1800 U	2900 U	3000 U	580 U	2900 U	2900 U	780 U	5000 U	560 U	1700 U	2900 U	2400 U	1700 U	1300 U	3000 U	5000 U
1,2,4-Trichlorobenzene	120 U	180 U	290 U	300 U	58 U	290 U	290 U	78 U	500 U	56 U	170 U	290 U	240 U	170 U	130 U	300 U	500 U
Naphthalene	**73** J	**360**	290 U	300 U	**130**	290 U	290 U	78 U	500 U	**37** J	170 U	290 U	240 U	170 U	**94** J	300 U	500 U
4-Chloroaniline	1600 U	2500 U	3900 U	4000 U	780 U	4000 U	3900 U	1000 U	6800 U	760 U	2300 U	4000 U	3200 U	2300 U	1800 U	4100 U	6800 U
Hexachlorobutadiene	610 U	920 U	1400 U	1500 U	290 U	1500 U	1400 U	390 U	2500 U	280 U	840 U	1500 U	1200 U	840 U	670 U	1500 U	2500 U
4-Chloro-3-methylphenol	610 U	920 U	1400 U	1500 U	290 U	1500 U	1400 U	390 U	2500 U	280 U	840 U	1500 U	1200 U	840 U	670 U	1500 U	2500 U
2-Methylnaphthalene	120 U	**230**	290 U	300 U	**89**	290 U	290 U	78 U	500 U	**31** J	170 U	290 U	240 U	170 U	130 U	300 U	500 U
Hexachlorocyclopentadiene	2400 U	3700 U	5800 U	5900 U	1200 U	5800 U	5800 U	1600 U	10000 U	1100 U	3300 U	5900 U	4700 U	3300 U	2700 U	6100 U	10000 U
2,4,6-Trichlorophenol	610 U	920 U	1400 U	1500 U	290 U	1500 U	1400 U	390 U	2500 U	280 U	840 U	1500 U	1200 U	840 U	670 U	1500 U	2500 U
2,4,5-Trichlorophenol	610 U	920 U	1400 U	1500 U	290 U	1500 U	1400 U	390 U	2500 U	280 U	840 U	1500 U	1200 U	840 U	670 U	1500 U	2500 U
2-Chloronaphthalene	120 U	180 U	290 U	300 U	58 U	290 U	290 U	78 U	500 U	56 U	170 U	290 U	240 U	170 U	130 U	300 U	500 U
2-Nitroaniline	610 U	920 U	1400 U	1500 U	290 U	1500 U	1400 U	390 U	2500 U	280 U	840 U	1500 U	1200 U	840 U	670 U	1500 U	2500 U
Dimethylphthalate	120 U	**150** J	**610**	300 U	**520**	290 U	**320**	**39** J	500 U	**260**	170 U	**460**	**240**	170 U	**170**	300 U	500 U
Acenaphthylene	120 U	180 U	290 U	300 U	**34** J	290 U	290 U	78 U	500 U	56 U	170 U	290 U	240 U	170 U	130 U	300 U	500 U
3-Nitroaniline	610 U	920 U	1400 U	1500 U	290 U	1500 U	1400 U	390 U	2500 U	280 U	840 U	1500 U	1200 U	840 U	670 U	1500 U	2500 U
Acenaphthene	120 U	**1300**	290 U	300 U	**52** J	290 U	290 U	78 U	500 U	56 U	170 U	290 U	240 U	**120** J	**130** J	300 U	500 U
2,4-Dinitrophenol	5200 U	7800 U	12000 U	13000 U	2400 U	12000 U	12000 U	3300 U	21000 U	2400 U	7100 U	12000 U	10000 U	7100 U	5700 U	13000 U	21000 U
4-Nitrophenol	610 U	920 U	1400 U	1500 U	290 U	1500 U	1400 U	390 U	2500 U	280 U	840 U	1500 U	1200 U	840 U	670 U	1500 U	2500 U
Dibenzofuran	120 U	**830**	290 U	300 U	**78**	290 U	290 U	78 U	500 U	**28** J	170 U	290 U	240 U	170 U	**120** J	300 U	500 U
2,6-Dinitrotoluene	610 U	920 U	1400 U	1500 U	290 U	1500 U	1400 U	390 U	2500 U	280 U	840 U	1500 U	1200 U	840 U	670 U	1500 U	2500 U
2,4-Dinitrotoluene	610 U	920 U	1400 U	1500 U	290 U	1500 U	1400 U	390 U	2500 U	280 U	840 U	1500 U	1200 U	840 U	670 U	1500 U	2500 U
Diethylphthalate	300 U	460 U	720 U	740 U	140 U	730 U	720 U	200 U	1300 U	140 U	420 U	740 U	590 U	420 U	340 U	760 U	1200 U
4-Chlorophenyl-phenylether	120 U	180 U	290 UJ	300 UJ	58 UJ	290 UJ	290 U	78 U	500 U	56 UJ	170 UJ	290 U	240 U	170 U	130 UJ	300 UJ	500 U
Fluorene	120 U	**1300**	290 U	300 U	**75**	290 U	290 U	78 U	500 U	**37** J	170 U	290 U	240 U	**130** J	**190**	**180** J	500 U
4-Nitroaniline	610 U	920 U	1400 U	1500 U	290 U	1500 U	1400 U	390 U	2500 U	280 U	840 U	1500 U	1200 U	840 U	670 U	1500 U	2500 U
4,6-Dinitro-2-Methylphenol	1200 U	1800 U	2900 U	3000 U	580 U	2900 U	2900 U	780 U	5000 U	560 U	1700 U	2900 U	2400 UJ	1700 U	1300 U	3000 U	5000 U
N-Nitrosodiphenylamine	120 U	180 U	290 U	300 U	**37** J	290 U	290 U	78 U	500 U	56 U	170 U	290 U	240 U	170 U	130 U	300 U	500 U
4-Bromophenyl-phenylether	120 U	180 U	290 U	300 U	58 U	290 U	290 U	78 U	500 U	56 U	170 U	290 U	240 U	170 U	130 U	300 U	500 U
Hexachlorobenzene	120 U	180 U	290 U	300 U	58 U	290 U	290 U	78 U	500 U	56 U	170 U	290 U	240 U	170 U	130 U	300 U	500 U
Pentachlorophenol	1200 U	1800 U	2900 U	3000 U	580 U	2900 U	**1600** J	780 U	5000 U	560 U	1700 U	2900 U	2400 U	1700 U	1300 U	3000 U	5000 U
Phenanthrene	**190**	**13000**	**840**	**1100**	**870**	**260** J	**760**	**260**	**650**	**350**	**440**	**940**	**540**	**750**	**1600**	**1300**	**1400**
Carbazole	120 U	**2800**	**170** J	**240** J	**200**	290 U	290 U	**39** J	500 U	**56**	170 U	**150** J	240 U	**110** J	**300**	**260** J	500 U
Anthracene	120 U	**2400**	290 U	300 U	**86**	290 U	290 U	78 U	500 U	56 U	170 U	290 U	240 U	**140** J	**200**	**200** J	500 U
Di-n-Butylphthalate	120 U	**290**	**1300**	**280** J	**740**	**15000**	**200** J	**320**	500 U	**1100**	**180**	**1000**	**500** J	**190**	**500**	**460**	**350** J
Fluoranthene	**230**	**16000**	**1200**	**1800**	**1600**	**350**	**960**	**300**	**1000**	**510**	**630**	**1400**	**730**	**780**	**2200**	**1400**	**2000**
Pyrene	**210**	**14000**	**1000**	**1400**	**1400**	**250** J	**780**	**260**	**730**	**400**	**470**	**1200**	**580**	**640**	**1700**	**1100**	**1500**
Butylbenzylphthalate	120 U	**670**	**7900**	**270** J	**340**	**1500**	**950**	**390**	**330** J	**980**	**160** J	**4000**	**1400** J	**530**	**400**	**350**	**900**
3,3'-Dichlorobenzidine	910 U	1400 U	2200 U	2200 U	430 U	2200 U	2200 U	580 U	3800 U	420 U	1200 U	2200 U	1800 U	1200 U	1000 U	2300 U	3800 U
Benzo(a)anthracene	120 U	**6700**	**350**	**480**	**500**	290 U	**240** J	**82**	**250** J	**130**	**190**	**370**	**160** J	**270**	**650**	**360**	**400** J
bis(2-Ethylhexyl)phthalate	**1200**	**4500**	**16000**	**6600**	**9000**	**1800**	**4500**	**4000**	**3800**	**12000**	**2800**	**23000**	**22000** J	**4600**	**10000**	**4100**	**15000**
Chrysene	**390**	**7500**	**930**	**1000**	**1100**	**230** J	**790**	**220**	**750**	**330**	**540**	**900**	**450**	**350**	**1200**	**710**	**1600**
Di-n-Octyl phthalate	120 U	**100** J	**2900**	**330**	**2300**	**570**	290 U	**280**	500 U	**190**	**900**	**3800**	**2100** J	**180**	**320**	**1000**	**2000**
Benzo(a)pyrene	120 U	**6400**	**420**	**710**	**810**	**150** J	**350**	**130**	**400** J	**190**	**260**	**470**	**270**	**280**	**770**	**580**	**700**
Indeno(1,2,3-cd)pyrene	120 U	**2800**	**280** J	**420**	**520**	290 U	**240** J	**82**	500 U	**150**	**180**	**380**	**190** J	**180**	**400**	**290** J	**480** J
Dibenz(a,h)anthracene	120 U	**1200**	290 U	300 U	**180**	290 U	290 U	78 U	500 U	**79**	170 U	290 U	240 U	170 U	**120** J	300 U	500 U
Benzo(g,h,i)perylene	**170**	**2900**	**490**	**520**	**650**	290 U	**360**	**120**	**400** J	**210**	**200**	**590**	**270**	**220**	**410**	**360**	**580**
1-Methylnaphthalene	120 U	**160** J	290 U	300 U	**37** J	290 U	290 U	78 U	500 U	56 U	170 U	290 U	240 U	170 U	130 U	300 U	500 U
Total Benzofluoranthenes	**270**	**12000**	**1000**	**1400**	**1900**	**340**	**790**	**240**	**880**	**460**	**550**	**1100**	**580**	**540**	**1600**	**980**	**1900**

TABLE N-2
2011 STORM DRAIN ANALYTICAL DATA
ISAACSON THOMPSON

	IT-CB36 TL74B 09/09/2011	IT-CB39/86/85 TL74A 09/09/2011	IT-CB60/61 TL29G 09/07/2011	IT-CB63 TL29F 09/07/2011	IT-CB66/67 TL29I 09/07/2011	IT-CB81/82 TL53B 09/08/2011	IT-CB83 TL53D 09/08/2011	IT-CB90/91 TL53C 09/08/2011	IT-CB90B TL53J 09/08/2011	IT-CBA TL29A 09/07/2011	IT-CBB/62/68 TL29H 09/07/2011	IT-CBC TL53G 09/08/2011	IT-CBD TL53H 09/08/2011	IT-CBE/77/77B TL53I 09/08/2011	IT-CG72 TL53A 09/08/2011	IT-CG74 TL29D 09/07/2011	IT-OWS23 TL53L 09/08/2011
TOTAL PETROLEUM HYDROCARBONS (mg/kg)																	
NWTPH-Dx																	
Diesel-Range Organics	**160**	**170**	**89**	120 U	**490**	**72**	**130**	**78**	**340**	**210**	**120**	**230**	110 U	**84**	**180**	**140**	**630**
Lube Oil	**3500**	**3800**	**580**	**620**	**1700**	**560**	**1000**	**500**	**3700**	**1500**	**740**	**1300**	**660**	**420**	**1400**	**1100**	**3700**
NWTPH-Gx																	
Gasoline Range Organics	26 U	48 U	58 U	78 U	92 U	12 U	190 U	11 U	**94**	14 U	11 U	68 U	64 U	35 U	89 U	140 U	**240**
PCBs (µg/kg)																	
SW8082																	
Aroclor 1016	20 U	92 U	20 U	20 U	19 U	19 U	14 U	20 U	19 U	20 U	19 U	20 U	20 U	19 U	19 U	19 U	39 U
Aroclor 1242	20 U	92 U	20 U	20 U	19 U	19 UJ	14 UJ	20 UJ	19 U	20 U	19 U	20 UJ	20 UJ	19 U	19 UJ	19 U	39 U
Aroclor 1248	**22**	92 U	20 U	36 U	**36**	19 U	56 U	20 U	**40**	58 U	**26**	53 U	40 U	19 U	91 U	140 U	**94**
Aroclor 1254	**49**	**190**	**39**	**77**	**77**	**52** J	**180** J	**45** J	**100**	**160**	**68**	**100** J	**170** J	**44**	**300** J	**280**	**210**
Aroclor 1260	**69** J	**180** J	**43**	**86**	**120**	**53**	**110**	**38**	**87**	**92**	**54**	**140**	**140** P	**44**	**330**	**99**	**160**
Aroclor 1221	20 U	92 U	20 U	20 U	19 U	19 U	14 U	20 U	19 U	20 U	19 U	20 U	20 U	19 U	19 U	19 U	39 U
Aroclor 1232	20 U	92 U	20 U	20 U	19 U	19 U	14 U	20 U	19 U	20 U	19 U	20 U	20 U	19 U	19 U	19 U	39 U
Total PCBs	**140** J	**370** J	**82**	**163**	**233**	**105** J	**290** J	**83** J	**227**	**252**	**148**	**240** J	**310** JP	**88**	**630** J	**379**	**464**
VOCs (µg/kg)																	
SW8260C																	
Chloromethane	1.3 U	2.1 UJ	1.6 UJ	2.4 UJ	1.9 UJ	1.5 U	6.3 UJ	1.4 U	1.9 UJ	1.3 UJ	1.4 U	2.4 UJ	2.6 U	1.6 U	3.5 UJ	2.4 UJ	4.8 UJ
Bromomethane	1.3 U	2.1 UJ	1.6 UJ	2.4 UJ	1.9 UJ	1.5 UJ	6.3 UJ	1.4 UJ	1.9 UJ	1.3 UJ	1.4 U	2.4 UJ	2.6 UJ	1.6 UJ	3.5 UJ	2.4 UJ	4.8 UJ
Vinyl Chloride	1.3 U	2.1 UJ	1.6 UJ	2.4 UJ	1.9 UJ	1.5 U	6.3 UJ	1.4 U	1.9 UJ	1.3 UJ	1.4 U	2.4 UJ	2.6 U	1.6 U	3.5 UJ	2.4 UJ	4.8 UJ
Chloroethane	1.3 U	2.1 UJ	1.6 UJ	2.4 UJ	1.9 UJ	1.5 U	6.3 UJ	1.4 U	1.9 UJ	1.3 UJ	1.4 U	2.4 UJ	2.6 U	1.6 U	3.5 UJ	2.4 UJ	4.8 UJ
Methylene Chloride	2.6 U	4.2 UJ	3.3 UJ	4.9 UJ	3.7 UJ	2.9 U	13 UJ	2.8 U	3.8 UJ	**1.6** J	2.7 U	4.8 UJ	5.2 U	3.2 U	7.1 UJ	4.8 UJ	9.6 UJ
Acetone	4.4 UJ	**12** J	**61** J	**320** J	**440** J	**100** J	**800** J	**81** J	**220** J	**340** J	**33**	**420** J	**540** J	**140** J	**640** J	**220** J	**1100** J
Carbon Disulfide	**1.0** J	**3.5** J	1.6 UJ	**6.9** J	**3.1** J	**3.7**	**4.3** J	**1.9**	**1.8** J	**7.7** J	**1.6** J	**19** J	**7.6**	**3.8**	**11** J	**9.5** J	**9.2** J
1,1-Dichloroethene	1.3 U	2.1 UJ	1.6 UJ	2.4 UJ	1.9 UJ	1.5 U	6.3 UJ	1.4 U	1.9 UJ	1.3 UJ	1.4 U	2.4 UJ	2.6 U	1.6 U	3.5 UJ	2.4 UJ	4.8 UJ
1,1-Dichloroethane	1.3 U	2.1 UJ	1.6 UJ	2.4 UJ	1.9 UJ	1.5 U	6.3 UJ	1.4 U	1.9 UJ	1.3 UJ	1.4 U	2.4 UJ	2.6 U	1.6 U	3.5 UJ	2.4 UJ	4.8 UJ
trans-1,2-Dichloroethene	1.3 U	2.1 UJ	1.6 UJ	2.4 UJ	1.9 UJ	1.5 U	6.3 UJ	1.4 U	1.9 UJ	1.3 UJ	1.4 U	2.4 UJ	2.6 U	1.6 U	3.5 UJ	2.4 UJ	4.8 UJ
cis-1,2-Dichloroethene	1.3 U	2.1 UJ	1.6 UJ	2.4 UJ	1.9 UJ	1.5 U	6.3 UJ	1.4 U	1.9 UJ	1.3 UJ	1.4 U	2.4 UJ	2.6 U	1.6 U	3.5 UJ	2.4 UJ	4.8 UJ
Chloroform	1.3 U	2.1 UJ	1.6 UJ	2.4 UJ	1.9 UJ	1.5 U	6.3 UJ	1.4 U	1.9 UJ	1.3 UJ	1.4 U	2.4 UJ	2.6 U	1.6 U	3.5 UJ	2.4 UJ	4.8 UJ
1,2-Dichloroethane	1.3 U	2.1 UJ	1.6 UJ	2.4 UJ	1.9 UJ	1.5 U	6.3 UJ	1.4 U	1.9 UJ	1.3 UJ	1.4 U	2.4 UJ	2.6 U	1.6 U	3.5 UJ	2.4 UJ	4.8 UJ
2-Butanone	6.5 U	10 UJ	**15** J	**60** J	**100** J	**27**	**190** J	**18**	**52** J	**82** J	**7.7**	**100** J	**130**	**37**	**140** J	**52** J	**220** J
1,1,1-Trichloroethane	1.3 U	2.1 UJ	1.6 UJ	2.4 UJ	1.9 UJ	1.5 U	6.3 UJ	1.4 U	1.9 UJ	1.3 UJ	1.4 U	2.4 UJ	2.6 U	1.6 U	3.5 UJ	2.4 UJ	4.8 UJ
Carbon Tetrachloride	1.3 U	2.1 UJ	1.6 UJ	2.4 UJ	1.9 UJ	1.5 U	6.3 UJ	1.4 U	1.9 UJ	1.3 UJ	1.4 U	2.4 UJ	2.6 UJ	1.6 U	3.5 UJ	2.4 UJ	4.8 UJ
Vinyl Acetate	6.5 U	10 UJ	8.2 UJ	12 UJ	9.4 UJ	7.3 U	31 UJ	6.9 U	9.4 UJ	6.6 UJ	6.9 U	12 UJ	13 U	8.0 U	18 UJ	12 UJ	24 UJ
Bromodichloromethane	1.3 U	2.1 UJ	1.6 UJ	2.4 UJ	1.9 UJ	1.5 U	6.3 UJ	1.4 U	1.9 UJ	1.3 UJ	1.4 U	2.4 UJ	2.6 UJ	1.6 U	3.5 UJ	2.4 UJ	4.8 UJ
1,2-Dichloropropane	1.3 U	2.1 UJ	1.6 UJ	2.4 UJ	1.9 UJ	1.5 U	6.3 UJ	1.4 U	1.9 UJ	1.3 UJ	1.4 U	2.4 UJ	2.6 U	1.6 U	3.5 UJ	2.4 UJ	4.8 UJ
cis-1,3-Dichloropropene	1.3 U	2.1 UJ	1.6 UJ	2.4 UJ	1.9 UJ	1.5 U	6.3 UJ	1.4 U	1.9 UJ	1.3 UJ	1.4 U	2.4 UJ	2.6 UJ	1.6 U	3.5 UJ	2.4 UJ	4.8 UJ
Trichloroethene	1.3 U	2.1 UJ	1.6 UJ	2.4 UJ	1.9 UJ	1.5 U	6.3 UJ	1.4 U	1.9 UJ	1.3 UJ	1.4 U	2.4 UJ	2.6 U	1.6 U	3.5 UJ	2.4 UJ	4.8 UJ
Dibromochloromethane	1.3 U	2.1 UJ	1.6 UJ	2.4 UJ	1.9 UJ	1.5 U	6.3 UJ	1.4 U	1.9 UJ	1.3 UJ	1.4 U	2.4 UJ	2.6 UJ	1.6 U	3.5 UJ	2.4 UJ	4.8 UJ
1,1,2-Trichloroethane	1.3 U	2.1 UJ	1.6 UJ	2.4 UJ	1.9 UJ	1.5 U	6.3 UJ	1.4 U	1.9 UJ	1.3 UJ	1.4 U	2.4 UJ	2.6 U	1.6 U	3.5 UJ	2.4 UJ	4.8 UJ
Benzene	1.3 U	2.1 UJ	1.6 UJ	2.4 UJ	**1.5** J	**0.8** J	6.3 UJ	1.4 U	**1.1** J	1.3 UJ	1.4 U	**2.1** J	2.6 U	1.6 U	3.5 UJ	2.4 UJ	**3.0** J
trans-1,3-Dichloropropene	1.3 U	2.1 UJ	1.6 UJ	2.4 UJ	1.9 UJ	1.5 U	6.3 UJ	1.4 U	1.9 UJ	1.3 UJ	1.4 U	2.4 UJ	2.6 UJ	1.6 U	3.5 UJ	2.4 UJ	4.8 UJ
2-Chloroethylvinylether	6.5 U	10 UJ	8.2 UJ	12 UJ	9.4 UJ	7.3 U	31 UJ	6.9 U	9.4 UJ	6.6 UJ	6.9 U	12 UJ	13 U	8.0 U	18 UJ	12 UJ	24 UJ
Bromoform	1.3 U	2.1 UJ	1.6 UJ	2.4 UJ	1.9 UJ	1.5 U	6.3 UJ	1.4 U	1.9 UJ	1.3 UJ	1.4 U	2.4 UJ	2.6 UJ	1.6 U	3.5 UJ	2.4 UJ	4.8 UJ
4-Methyl-2-Pentanone (MIBK)	6.5 U	10 UJ	8.2 UJ	12 UJ	9.4 UJ	7.3 U	31 UJ	6.9 U	**13** J	6.6 UJ	6.9 U	12 UJ	13 U	8.0 U	18 UJ	12 UJ	24 UJ
2-Hexanone	6.5 U	10 UJ	8.2 UJ	12 UJ	9.4 UJ	7.3 U	31 UJ	6.9 U	9.4 UJ	6.6 UJ	6.9 U	12 UJ	13 U	8.0 U	18 UJ	12 UJ	24 UJ
Tetrachloroethene	1.3 U	2.1 UJ	1.6 UJ	2.4 UJ	1.9 UJ	1.5 U	6.3 UJ	1.4 U	1.9 UJ	1.3 UJ	1.4 U	2.4 UJ	2.6 U	1.6 U	3.5 UJ	2.4 UJ	4.8 UJ
1,1,2,2-Tetrachloroethane	1.3 U	2.1 UJ	1.6 UJ	2.4 UJ	1.9 UJ	1.5 U	6.3 UJ	1.4 U	1.9 UJ	1.3 UJ	1.4 U	2.4 UJ	2.6 U	1.6 U	3.5 UJ	2.4 UJ	4.8 UJ
Toluene	**0.6** J	**18** J	**1.0** J	**6.1** J	**320** J	**270**	**3.7** J	**29**	**6100** J	**66** J	**64**	**4.7** J	**2.6**	**4.7**	**5.8** J	**4.0** J	**28000** J
Chlorobenzene	1.3 U	2.1 UJ	1.6 UJ	2.4 UJ	1.9 UJ	1.5 U	6.3 UJ	1.4 U	1.9 UJ	1.3 UJ	1.4 U	2.4 UJ	2.6 U	1.6 U	3.5 UJ	2.4 UJ	4.8 UJ
Ethylbenzene	1.3 U	2.1 UJ	1.6 UJ	**4.7** J	**5.2** J	**3.6**	**12** J	**0.9** J	**2.6** J	**1.9** J	1.4 U	**46** J	**12**	**4.1**	**6.8** J	**1.8** J	**130** J
Styrene	1.3 U	2.1 UJ	1.6 UJ	2.4 UJ	1.9 UJ	1.5 U	6.3 UJ	1.4 U	1.9 UJ	1.3 UJ	1.4 U	2.4 UJ	2.6 UJ	1.6 U	3.5 UJ	2.4 UJ	4.8 UJ
Trichlorofluoromethane	1.3 U	2.1 UJ	1.6 UJ	2.4 UJ	1.9 UJ	1.5 U	6.3 UJ	1.4 U	1.9 UJ	1.3 UJ	1.4 U	2.4 UJ	2.6 U	1.6 U	3.5 UJ	2.4 UJ	4.8 UJ
1,1,2-Trichloro-1,2,2-trifluoroethane	2.6 U	4.2 UJ	3.3 UJ	4.9 UJ	3.7 UJ	2.9 U	13 UJ	2.8 U	3.8 UJ	2.6 UJ	2.7 U	4.8 UJ	5.2 U	3.2 U	7.1 UJ	4.8 UJ	9.6 UJ
m, p-Xylene	1.3 U	2.1 UJ	1.6 UJ	**11** J	**5.0** J	**6.1**	**3.8** J	**1.3** J	**4.2** J	**8.1** J	**1.1** J	**66** J	**10**	**3.3**	**14** J	2.4 UJ	**240** J
o-Xylene	1.3 U	2.1 UJ	1.6 UJ	**3.5** J	**3.2** J	**3.6**	6.3 UJ	**0.9** J	**2.0** J	**10** J	1.4 U	**61** J	**8.0** J	**2.0**	**4.1** J	2.4 UJ	**98** J
1,2-Dichlorobenzene	1.3 U	2.1 UJ	1.6 UJ	2.4 UJ	1.9 UJ	1.5 U	6.3 UJ	1.4 U	1.9 UJ	1.3 UJ	1.4 U	2.4 UJ	**7.0** J	1.6 U	3.5 UJ	2.4 UJ	4.8 UJ
1,3-Dichlorobenzene	1.3 U	2.1 UJ	1.6 UJ	2.4 UJ	1.9 UJ	1.5 U	6.3 UJ	1.4 U	1.9 UJ	1.3 UJ	1.4 U	2.4 UJ	2.6 UJ	1.6 U	3.5 UJ	2.4 UJ	4.8 UJ
1,4-Dichlorobenzene	1.3 U	2.1 UJ	1.6 UJ	2.4 UJ	1.9 UJ	1.5 U	6.3 UJ	1.4 U	1.9 UJ	1.3 UJ	1.4 U	2.4 UJ	**5.3** J	1.6 U	3.5 UJ	2.4 UJ	4.8 UJ

TABLE N-2
2011 STORM DRAIN ANALYTICAL DATA
ISAACSON THOMPSON

	IT-CB36 TL74B 09/09/2011	IT-CB39/86/85 TL74A 09/09/2011	IT-CB60/61 TL29G 09/07/2011	IT-CB63 TL29F 09/07/2011	IT-CB66/67 TL29I 09/07/2011	IT-CB81/82 TL53B 09/08/2011	IT-CB83 TL53D 09/08/2011	IT-CB90/91 TL53C 09/08/2011	IT-CB90B TL53J 09/08/2011	IT-CBA TL29A 09/07/2011	IT-CBB/62/68 TL29H 09/07/2011	IT-CBC TL53G 09/08/2011	IT-CBD TL53H 09/08/2011	IT-CBE/77/77B TL53I 09/08/2011	IT-CG72 TL53A 09/08/2011	IT-CG74 TL29D 09/07/2011	IT-OWS23 TL53L 09/08/2011
VOCs Con't																	
Acrolein	65 U	100 UJ	82 UJ	120 UJ	94 UJ	73 U	310 UJ	69 U	94 UJ	66 UJ	69 U	120 UJ	130 UJ	80 U	180 UJ	120 UJ	240 UJ
Methyl Iodide	1.3 U	2.1 UJ	1.6 UJ	2.4 UJ	1.9 UJ	1.5 U	6.3 UJ	1.4 U	1.9 UJ	1.3 UJ	1.4 U	2.4 UJ	2.6 UJ	1.6 U	3.5 UJ	2.4 UJ	4.8 UJ
Bromoethane	2.6 U	4.2 UJ	3.3 UJ	4.9 UJ	3.7 UJ	2.9 U	13 UJ	2.8 U	3.8 UJ	2.6 UJ	2.7 U	4.8 UJ	5.2 U	3.2 U	7.1 UJ	4.8 UJ	9.6 UJ
Acrylonitrile	6.5 U	10 UJ	8.2 UJ	12 UJ	9.4 UJ	7.3 U	31 UJ	6.9 U	9.4 UJ	6.6 UJ	6.9 U	12 UJ	13 U	8.0 U	18 UJ	12 UJ	24 UJ
1,1-Dichloropropene	1.3 U	2.1 UJ	1.6 UJ	2.4 UJ	1.9 UJ	1.5 U	6.3 UJ	1.4 U	1.9 UJ	1.3 UJ	1.4 U	2.4 UJ	2.6 U	1.6 U	3.5 UJ	2.4 UJ	4.8 UJ
Dibromomethane	1.3 U	2.1 UJ	1.6 UJ	2.4 UJ	1.9 UJ	1.5 U	6.3 UJ	1.4 U	1.9 UJ	1.3 UJ	1.4 U	2.4 UJ	2.6 U	1.6 U	3.5 UJ	2.4 UJ	4.8 UJ
1,1,1,2-Tetrachloroethane	1.3 U	2.1 UJ	1.6 UJ	2.4 UJ	1.9 UJ	1.5 U	6.3 UJ	1.4 U	1.9 UJ	1.3 UJ	1.4 U	2.4 UJ	2.6 UJ	1.6 U	3.5 UJ	2.4 UJ	4.8 UJ
1,2-Dibromo-3-chloropropane	6.5 U	10 UJ	8.2 UJ	12 UJ	9.4 UJ	7.3 U	31 UJ	6.9 U	9.4 UJ	6.6 UJ	6.9 U	12 UJ	13 U	8.0 U	18 UJ	12 UJ	24 UJ
1,2,3-Trichloropropane	2.6 U	4.2 UJ	3.3 UJ	4.9 UJ	3.7 UJ	2.9 U	13 UJ	2.8 U	3.8 UJ	2.6 UJ	2.7 U	4.8 UJ	5.2 U	3.2 U	7.1 UJ	4.8 UJ	9.6 UJ
trans-1,4-Dichloro-2-butene	6.5 U	10 UJ	8.2 UJ	12 UJ	9.4 UJ	7.3 U	31 UJ	6.9 U	9.4 UJ	6.6 UJ	6.9 U	12 UJ	13 UJ	8.0 U	18 UJ	12 UJ	24 UJ
1,3,5-Trimethylbenzene	1.3 U	2.1 UJ	1.6 UJ	**2.8** J	**3.1** J	**1.7**	6.3 UJ	1.4 U	1.9 UJ	**3.4** J	1.4 U	**20** J	**6.0**	**2.1**	**7.0** J	**3.8** J	**6.5** J
1,2,4-Trimethylbenzene	1.3 U	2.1 UJ	1.6 UJ	**4.7** J	**4.2** J	**2.4**	6.3 UJ	**0.9** J	**1.5** J	**5.1** J	1.4 U	**33** J	**7.4**	**2.4**	**4.4** J	**2.4** J	**10** J
Hexachlorobutadiene	6.5 U	10 UJ	8.2 UJ	12 UJ	9.4 UJ	7.3 UJ	31 UJ	6.9 UJ	9.4 UJ	6.6 UJ	6.9 U	12 UJ	13 UJ	8.0 UJ	18 UJ	12 UJ	24 UJ
Ethylene Dibromide	1.3 U	2.1 UJ	1.6 UJ	2.4 UJ	1.9 UJ	1.5 U	6.3 UJ	1.4 U	1.9 UJ	1.3 UJ	1.4 U	2.4 UJ	2.6 UJ	1.6 U	3.5 UJ	2.4 UJ	4.8 UJ
Bromochloromethane	1.3 U	2.1 UJ	1.6 UJ	2.4 UJ	1.9 UJ	1.5 U	6.3 UJ	1.4 U	1.9 UJ	1.3 UJ	1.4 U	2.4 UJ	2.6 U	1.6 U	3.5 UJ	2.4 UJ	4.8 UJ
2,2-Dichloropropane	1.3 U	2.1 UJ	1.6 UJ	2.4 UJ	1.9 UJ	1.5 U	6.3 UJ	1.4 U	1.9 UJ	1.3 UJ	1.4 U	2.4 UJ	2.6 U	1.6 U	3.5 UJ	2.4 UJ	4.8 UJ
1,3-Dichloropropane	1.3 U	2.1 UJ	1.6 UJ	2.4 UJ	1.9 UJ	1.5 U	6.3 UJ	1.4 U	1.9 UJ	1.3 UJ	1.4 U	2.4 UJ	2.6 U	1.6 U	3.5 UJ	2.4 UJ	4.8 UJ
Isopropylbenzene	1.3 U	2.1 UJ	1.6 UJ	2.4 UJ	**4.2** J	1.5 U	6.3 UJ	1.4 U	1.9 UJ	**1.6** J	1.4 U	**15** J	**3.0**	1.6 U	3.5 UJ	2.4 UJ	**17** J
n-Propylbenzene	1.3 U	2.1 UJ	1.6 UJ	2.4 UJ	1.9 UJ	1.5 U	6.3 UJ	1.4 U	1.9 UJ	1.3 UJ	1.4 U	**5.6** J	2.6 U	1.6 U	3.5 UJ	2.4 UJ	4.8 UJ
Bromobenzene	1.3 U	2.1 UJ	1.6 UJ	2.4 UJ	1.9 UJ	1.5 U	6.3 UJ	1.4 U	1.9 UJ	1.3 UJ	1.4 U	2.4 UJ	2.6 U	1.6 U	3.5 UJ	2.4 UJ	4.8 UJ
2-Chlorotoluene	1.3 U	2.1 UJ	1.6 UJ	2.4 UJ	1.9 UJ	1.5 U	6.3 UJ	1.4 U	1.9 UJ	1.3 UJ	1.4 U	2.4 UJ	2.6 U	1.6 U	3.5 UJ	2.4 UJ	4.8 UJ
4-Chlorotoluene	1.3 U	2.1 UJ	1.6 UJ	2.4 UJ	1.9 UJ	1.5 U	6.3 UJ	1.4 U	1.9 UJ	1.3 UJ	1.4 U	2.4 UJ	2.6 U	1.6 U	3.5 UJ	2.4 UJ	4.8 UJ
tert-Butylbenzene	1.3 U	2.1 UJ	1.6 UJ	2.4 UJ	1.9 UJ	1.5 U	6.3 UJ	1.4 U	1.9 UJ	1.3 UJ	1.4 U	2.4 UJ	2.6 UJ	1.6 U	3.5 UJ	2.4 UJ	4.8 UJ
sec-Butylbenzene	1.3 U	2.1 UJ	1.6 UJ	2.4 UJ	1.9 UJ	1.5 U	6.3 UJ	1.4 U	1.9 UJ	1.3 UJ	1.4 U	**2.6** J	2.6 UJ	1.6 U	3.5 UJ	2.4 UJ	4.8 UJ
4-Isopropyltoluene	1.3 U	2.1 UJ	**0.9** J	**6.0** J	**3.4** J	**21**	**5.7** J	**9.3**	**47** J	**1.2** J	1.4 U	**3.3** J	**2.6** J	**2.6**	**4.3** J	**3.7** J	**68** J
n-Butylbenzene	1.3 U	2.1 UJ	1.6 UJ	2.4 UJ	1.9 UJ	1.5 U	6.3 UJ	1.4 U	1.9 UJ	1.3 UJ	1.4 U	**1.8** J	2.6 UJ	1.6 U	3.5 UJ	2.4 UJ	4.8 UJ
1,2,4-Trichlorobenzene	6.5 U	10 UJ	8.2 UJ	12 UJ	9.4 UJ	7.3 U	31 UJ	6.9 U	9.4 UJ	6.6 UJ	6.9 U	12 UJ	13 UJ	8.0 U	18 UJ	12 UJ	24 UJ
Naphthalene	6.5 U	10 UJ	8.2 UJ	12 UJ	9.4 UJ	7.3 U	31 UJ	6.9 U	9.4 UJ	6.6 UJ	6.9 U	12 UJ	13 UJ	8.0 U	18 UJ	12 UJ	24 UJ
1,2,3-Trichlorobenzene	6.5 U	10 UJ	8.2 UJ	12 UJ	9.4 UJ	7.3 U	31 UJ	6.9 U	9.4 UJ	6.6 UJ	6.9 U	12 UJ	13 UJ	8.0 U	18 UJ	12 UJ	24 UJ
CONVENTIONALS																	
Total Organic Carbon (%)	**12.2**	**16.3**	**9.26**	**13.0**	**21.6**	**8.95**	**11.3**	**5.48**	**12.5**	**7.91**	**5.95**	**20.9**	**11.4**	**6.45**	**16.3**	**16.4**	**21.5**
Total Solids (%)	**72.70**	**45.00**	**56.20**	**39.40**	**45.30**	**65.20**	**41.90**	**75.60**	**60.80**	**68.10**	**66.70**	**54.90**	**47.40**	**69.80**	**46.40**	**36.20**	**37.70**
Hexavalent Chrome (mg/kg)	0.539 U	**0.951**	0.698 U	1.01 U	0.879 U	0.599 U	0.929 U	0.525 U	**1.24**	0.574 U	0.595 U	0.712 U	0.834 U	0.557 U	**1.09**	1.08 U	1.04 U
DIOXIN/FURAN (pg/g)																	
EPA 1613B																	
1,2,3,4,6,7,8-HpCDD										**485**						**874**	
1,2,3,4,6,7,8-HpCDF										**232**						**265**	
1,2,3,4,7,8,9-HpCDF										**27.0**						**20.7**	
1,2,3,4,7,8-HxCDD										**10.3**						**25.5**	
1,2,3,4,7,8-HxCDF										**42.7**						**24.6**	
1,2,3,6,7,8-HxCDD										**33.0**						**44.6**	
1,2,3,6,7,8-HxCDF										**21.1**						**19.2**	
1,2,3,7,8,9-HxCDD										**17.9**						**39.8**	
1,2,3,7,8,9-HxCDF										**20.3**						**7.39**	
1,2,3,7,8-PeCDD										**7.96**						**19.2**	
1,2,3,7,8-PeCDF										**8.87**						**7.90**	
2,3,4,6,7,8-HxCDF										**24.7**						**22.1**	
2,3,4,7,8-PeCDF										**9.07**						**11.5**	
2,3,7,8-TCDD										1.01 U						3.81 U	
2,3,7,8-TCDF										**7.42**						**25.1**	
OCDD										**3500**						**7210**	
OCDF										**231**						**750**	
Total HpCDD										**877**						**1680**	
Total HpCDF										**744**						**711**	
Total HxCDD										**191**						**402**	
Total HxCDF										**679**						**430**	
Total PeCDD										**47.3**						**112**	
Total PeCDF										**197**						**228**	
Total TCDD										**18.7**						**35.0**	
Total TCDF										**85.3**						**180**	
D/F TEQ										**37.2**						**57.7**	

TABLE N-2
2011 STORM DRAIN ANALYTICAL DATA
ISAACSON THOMPSON

	IT-OWS79 TL53E 09/08/2011	IT-VTVE TL84C 09/12/2011	IT-VTVW TL29E/TO31A 09/07/2011
TOTAL METALS (mg/kg)			
EPA200.8/SW7471A			
Antimony	**0.6**	**0.5**	0.4 U
Arsenic	**20.0**	**38.8**	**38.3**
Barium	**298**	**74**	**113**
Beryllium	0.5 U	0.4 U	0.4 U
Cadmium	**38.8**	**2.4**	**23.7**
Chromium	**200**	**290**	**821**
Copper	**315**	**245**	**205**
Lead	**296**	**378**	**182**
Mercury	**0.35**	**0.19**	**0.16**
Nickel	**100**	**236**	**225**
Selenium	**2**	**1**	**4**
Silver	**1.4**	**0.6**	**0.6**
Thallium	0.5 U	0.4 U	0.4 U
Zinc	**3490**	**990**	**830**
TCLP METALS (mg/L)			
Arsenic	0.2 U		0.2 U
Barium	1.40 U		**0.33**
Cadmium	0.01 U		**0.09**
Chromium	0.02 U		0.02 U
Lead	0.1 U		0.1 U
Mercury	0.0001 U		0.0001 U
Selenium	0.2 U		0.2 U
Silver	0.02 U		0.02 U
PAHs (µg/kg)			
SW8270DSIM			
Naphthalene	**300**	**180**	**140**
2-Methylnaphthalene	**200**	**230**	**160**
1-Methylnaphthalene	**160**	**130**	**100**
Acenaphthylene	**44** J	**94**	**40** J
Acenaphthene	**480**	**220**	**110**
Fluorene	**560**	**150**	**140**
Phenanthrene	**3600**	**1400**	**780**
Anthracene	**670**	**120**	**83**
Fluoranthene	**4500**	**2100**	**890**
Pyrene	**3500**	**1600**	**660**
Benzo(a)anthracene	**1500**	**540**	**250**
Chrysene	**1900**	**1400**	**670**
Benzo(a)pyrene	**1200**	**660**	**260**
Indeno(1,2,3-cd)pyrene	**530**	**560**	**190**
Dibenz(a,h)anthracene	**170**	**140**	**58** J
Benzo(g,h,i)perylene	**610**	**760**	**280**
Dibenzofuran	**300**	**110**	**98**
Total Benzofluoranthenes	**2600**	**1600**	**590**
cPAH TEQ	**1699**	**958**	**376**
SVOCs (µg/kg)			
SW8270D			
Phenol	**460**	**260**	**390** J
Bis-(2-Chloroethyl) Ether	360 U	240 U	410 U
2-Chlorophenol	360 U	240 U	410 U
1,3-Dichlorobenzene	360 U	240 U	410 U
1,4-Dichlorobenzene	360 U	240 U	410 U
Benzyl Alcohol	**6500**	**210** J	410 U
1,2-Dichlorobenzene	360 U	240 U	410 U
2-Methylphenol	360 U	240 U	410 U
2,2'-Oxybis(1-Chloropropane)	360 U	240 U	410 U
4-Methylphenol	**510** J	**590**	**370** J

TABLE N-2
2011 STORM DRAIN ANALYTICAL DATA
ISAACSON THOMPSON

	IT-OWS79 TL53E 09/08/2011	IT-VTVE TL84C 09/12/2011	IT-VTVW TL29E/TO31A 09/07/2011
SVOCs Con't			
N-Nitroso-Di-N-Propylamine	360 U	240 U	410 U
Hexachloroethane	360 U	240 U	410 U
Nitrobenzene	360 U	240 U	410 U
Isophorone	360 U	240 U	410 U
2-Nitrophenol	1800 U	1200 U	2000 U
2,4-Dimethylphenol	710 U	480 U	820 U
Benzoic Acid	7100 UJ	**1200** J	8200 UJ
bis(2-Chloroethoxy) Methane	360 U	240 U	410 U
2,4-Dichlorophenol	3600 U	2400 U	4100 U
1,2,4-Trichlorobenzene	360 U	240 U	410 U
Naphthalene	**210** J	**150** J	410 U
4-Chloroaniline	4800 U	3200 U	5500 U
Hexachlorobutadiene	1800 U	1200 U	2000 U
4-Chloro-3-methylphenol	1800 U	1200 U	2000 U
2-Methylnaphthalene	**180** J	**200** J	410 U
Hexachlorocyclopentadiene	7100 U	4800 U	8200 U
2,4,6-Trichlorophenol	1800 U	1200 U	2000 U
2,4,5-Trichlorophenol	1800 U	1200 U	2000 U
2-Chloronaphthalene	360 U	240 U	410 U
2-Nitroaniline	1800 U	1200 U	2000 U
Dimethylphthalate	**320** J	240 U	410 U
Acenaphthylene	360 U	240 U	410 U
3-Nitroaniline	1800 U	1200 U	2000 U
Acenaphthene	**320** J	240 U	410 U
2,4-Dinitrophenol	15000 U	10000 U	17000 U
4-Nitrophenol	1800 U	1200 U	2000 U
Dibenzofuran	**230** J	240 U	410 U
2,6-Dinitrotoluene	1800 U	1200 U	2000 U
2,4-Dinitrotoluene	1800 U	1200 U	2000 U
Diethylphthalate	890 U	590 U	1000 U
4-Chlorophenyl-phenylether	360 U	240 U	410 UJ
Fluorene	**360**	**150** J	410 U
4-Nitroaniline	1800 U	1200 U	2000 U
4,6-Dinitro-2-Methylphenol	3600 U	2400 U	4100 U
N-Nitrosodiphenylamine	360 U	240 U	410 U
4-Bromophenyl-phenylether	360 U	240 U	410 U
Hexachlorobenzene	360 U	240 U	410 U
Pentachlorophenol	3600 U	2400 U	4100 U
Phenanthrene	**2800**	**1100**	**660**
Carbazole	**410**	**200** J	410 U
Anthracene	**500**	240 U	410 U
Di-n-Butylphthalate	**600**	240 U	**430**
Fluoranthene	**3400**	**1700**	**700**
Pyrene	**2600**	**1300**	**510**
Butylbenzylphthalate	**1400**	**370** J	**370** J
3,3'-Dichlorobenzidine	2700 U	1800 U	3100 U
Benzo(a)anthracene	**1000**	**380**	410 U
bis(2-Ethylhexyl)phthalate	**22000**	**3300**	**4400**
Chrysene	**1900**	**1200**	**570**
Di-n-Octyl phthalate	**1800**	**130** J	410 U
Benzo(a)pyrene	**1200**	**590**	**250** J
Indeno(1,2,3-cd)pyrene	**780**	**440**	410 U
Dibenz(a,h)anthracene	**280** J	**140** J	410 U
Benzo(g,h,i)perylene	**850**	**580**	**290** J
1-Methylnaphthalene	360 U	240 U	410 U
Total Benzofluoranthenes	**2500**	**1400**	**590**

TABLE N-2
2011 STORM DRAIN ANALYTICAL DATA
ISAACSON THOMPSON

	IT-OWS79 TL53E 09/08/2011	IT-VTVE TL84C 09/12/2011	IT-VTVW TL29E/TO31A 09/07/2011
TOTAL PETROLEUM HYDROCARBONS (mg/kg)			
NWTPH-Dx			
Diesel-Range Organics	**580**	**480**	**250**
Lube Oil	**2800**	**1400**	**1400**
NWTPH-Gx			
Gasoline Range Organics	160 U	22 U	94 U
PCBs (µg/kg)			
SW8082			
Aroclor 1016	19 U	39 U	19 U
Aroclor 1242	19 UJ	39 U	19 U
Aroclor 1248	75 U	190 U	81 U
Aroclor 1254	**180** J	**570**	**130**
Aroclor 1260	**180**	**200**	**100**
Aroclor 1221	19 U	39 U	19 U
Aroclor 1232	19 U	39 U	19 U
Total PCBs	**360** J	**770**	**230**
VOCs (µg/kg)			
SW8260C			
Chloromethane	5.4 UJ	2.2 UJ	1.9 U
Bromomethane	5.4 UJ	2.2 UJ	1.9 U
Vinyl Chloride	5.4 UJ	2.2 UJ	1.9 U
Chloroethane	5.4 UJ	2.2 UJ	1.9 U
Methylene Chloride	11 UJ	4.4 UJ	3.8 U
Acetone	**1100** J	**320** J	**200**
Carbon Disulfide	**27** J	**21** J	**17** J
1,1-Dichloroethene	5.4 UJ	2.2 UJ	1.9 U
1,1-Dichloroethane	5.4 UJ	2.2 UJ	1.9 U
trans-1,2-Dichloroethene	5.4 UJ	2.2 UJ	1.9 U
cis-1,2-Dichloroethene	5.4 UJ	2.2 UJ	1.9 U
Chloroform	5.4 UJ	2.2 UJ	1.9 U
1,2-Dichloroethane	5.4 UJ	2.2 UJ	1.9 U
2-Butanone	**290** J	**78** J	**47**
1,1,1-Trichloroethane	5.4 UJ	2.2 UJ	1.9 U
Carbon Tetrachloride	5.4 UJ	2.2 UJ	1.9 UJ
Vinyl Acetate	27 UJ	11 UJ	9.4 UJ
Bromodichloromethane	5.4 UJ	2.2 UJ	1.9 UJ
1,2-Dichloropropane	5.4 UJ	2.2 UJ	1.9 U
cis-1,3-Dichloropropene	5.4 UJ	2.2 UJ	1.9 UJ
Trichloroethene	5.4 UJ	2.2 UJ	1.9 U
Dibromochloromethane	5.4 UJ	2.2 UJ	1.9 UJ
1,1,2-Trichloroethane	5.4 UJ	2.2 UJ	1.9 U
Benzene	5.4 UJ	2.2 UJ	1.9 U
trans-1,3-Dichloropropene	5.4 UJ	2.2 UJ	1.9 UJ
2-Chloroethylvinylether	27 UJ	11 UJ	9.4 U
Bromoform	5.4 UJ	2.2 UJ	1.9 U
4-Methyl-2-Pentanone (MIBK)	27 UJ	11 UJ	9.4 U
2-Hexanone	27 UJ	11 UJ	9.4 U
Tetrachloroethene	5.4 UJ	2.2 UJ	1.9 UJ
1,1,2,2-Tetrachloroethane	5.4 UJ	2.2 UJ	1.9 U
Toluene	**43** J	**32** J	**3.8** J
Chlorobenzene	5.4 UJ	2.2 UJ	1.9 UJ
Ethylbenzene	**28** J	**5.4** J	**6.4** J
Styrene	5.4 UJ	2.2 UJ	1.9 UJ
Trichlorofluoromethane	5.4 UJ	2.2 UJ	1.9 U
1,1,2-Trichloro-1,2,2-trifluoroethane	11 UJ	4.4 UJ	3.8 U
m, p-Xylene	**40** J	**6.9** J	**7.1** J
o-Xylene	**21** J	**2.5** MJ	**2.0** J
1,2-Dichlorobenzene	5.4 UJ	2.2 UJ	1.9 UJ
1,3-Dichlorobenzene	5.4 UJ	2.2 UJ	1.9 UJ
1,4-Dichlorobenzene	5.4 UJ	2.2 UJ	1.9 UJ

TABLE N-2
2011 STORM DRAIN ANALYTICAL DATA
ISAACSON THOMPSON

	IT-OWS79 TL53E 09/08/2011	IT-VTVE TL84C 09/12/2011	IT-VTVW TL29E/TO31A 09/07/2011
VOCs Con't			
Acrolein	270 UJ	110 UJ	94 UJ
Methyl Iodide	5.4 UJ	2.2 UJ	1.9 UJ
Bromoethane	11 UJ	4.4 UJ	3.8 U
Acrylonitrile	27 UJ	11 UJ	9.4 U
1,1-Dichloropropene	5.4 UJ	2.2 UJ	1.9 U
Dibromomethane	5.4 UJ	2.2 UJ	1.9 U
1,1,1,2-Tetrachloroethane	5.4 UJ	2.2 UJ	1.9 UJ
1,2-Dibromo-3-chloropropane	27 UJ	11 UJ	9.4 U
1,2,3-Trichloropropane	11 UJ	4.4 UJ	3.8 U
trans-1,4-Dichloro-2-butene	27 UJ	11 UJ	9.4 UJ
1,3,5-Trimethylbenzene	**7.0** J	**15** J	**3.6** J
1,2,4-Trimethylbenzene	**16** J	**30** J	**6.1** J
Hexachlorobutadiene	27 UJ	11 UJ	9.4 UJ
Ethylene Dibromide	5.4 UJ	2.2 UJ	1.9 UJ
Bromochloromethane	5.4 UJ	2.2 UJ	1.9 U
2,2-Dichloropropane	5.4 UJ	2.2 UJ	1.9 U
1,3-Dichloropropane	5.4 UJ	2.2 UJ	1.9 U
Isopropylbenzene	**7.2** J	2.2 UJ	1.9 U
n-Propylbenzene	**4.0** J	**7.0** J	1.9 U
Bromobenzene	5.4 UJ	2.2 UJ	1.9 U
2-Chlorotoluene	5.4 UJ	2.2 UJ	1.9 U
4-Chlorotoluene	5.4 UJ	2.2 UJ	1.9 U
tert-Butylbenzene	5.4 UJ	2.2 UJ	1.9 UJ
sec-Butylbenzene	**3.3** J	**4.6** J	1.9 UJ
4-Isopropyltoluene	**15** J	**42** J	**2.6** J
n-Butylbenzene	5.4 UJ	**11** J	1.9 UJ
1,2,4-Trichlorobenzene	27 UJ	11 UJ	9.4 UJ
Naphthalene	27 UJ	11 UJ	9.4 UJ
1,2,3-Trichlorobenzene	27 UJ	11 UJ	9.4 UJ
CONVENTIONALS			
Total Organic Carbon (%)	**14.1**	**12.0**	**10.5**
Total Solids (%)	**37.60**	**45.50**	**45.00**
Hexavalent Chrome (mg/kg)	**1.25**	0.859 U	0.875 U
DIOXIN/FURAN (pg/g)			
EPA 1613B			
1,2,3,4,6,7,8-HpCDD			**448**
1,2,3,4,6,7,8-HpCDF			**83.2**
1,2,3,4,7,8,9-HpCDF			**6.35**
1,2,3,4,7,8-HxCDD			**11.8**
1,2,3,4,7,8-HxCDF			**11.3**
1,2,3,6,7,8-HxCDD			**25.6**
1,2,3,6,7,8-HxCDF			**10.3**
1,2,3,7,8,9-HxCDD			**24.3**
1,2,3,7,8,9-HxCDF			**3.25**
1,2,3,7,8-PeCDD			**12.2**
1,2,3,7,8-PeCDF			**6.43**
2,3,4,6,7,8-HxCDF			**13.9**
2,3,4,7,8-PeCDF			**10.9**
2,3,7,8-TCDD			**2.27**
2,3,7,8-TCDF			**23.8**
OCDD			**2900**
OCDF			**150**
Total HpCDD			**1120**
Total HpCDF			**205**
Total HxCDD			**297**
Total HxCDF			**197**
Total PeCDD			**96.8**
Total PeCDF			**273**
Total TCDD			**41.7**
Total TCDF			**226**
D/F TEQ			**36.6**

pg/g = picogram per gram
mg/L = milligrams per liter
µg/L = micrograms per liter
µg/kg = micrograms per kilogram
mg/kg = milligrams per kilogram
EPA = U.S. Environmental Protection Agency
SVOC = Semivolatile Organic Compound
TEQ = Toxic Equivalent Concentration
SIM = Select Ion Monitoring
cPAH = Carcinogenic Polycyclic Aromatic Hydrocarbons
PCB = Polychlorinated Biphenyls
NWTPH-Dx = Total Petroleum Hydrocarbon-Diesel Range
NWTPH-G = Total Petroleum Hydrocarbon-Gasoline Range
Bold = Detected compound.

U = Indicates the compound was not detected at the reported concentration.
UJ = The analyte was not detected in the sample; the reported sample reporting limit is an estimate.
J = Indicates the analyte was positively identified; the associated numerical value is the approximate concentration of the analyte in the sample.
M = Indicates an estimated value of analyte found and confirmed by analyst but with low spectral match.
P = The analyte was detected on both chromatographic columns but the quantified values differ by 40% RPD with no obvious chromatographic interference. The higher of the two values is reported by the laboratory.

TABLE N-3
2011 STORM DRAIN ANALYTICAL DATA - CARBON NORMALIZED
ISAACSON THOMPSON

	OC IT-CB8 TL74D 09/09/2011	OC IT-CB10 TL84F 09/12/2011	OC IT-CB11 TL84E 09/12/2011	OC IT-CB12 TL84D 09/12/2011	OC IT-CB13B/14 TL53K 09/08/2011	OC IT-CB17 TL74F 09/09/2011	OC IT-CB20 TL74C 09/09/2011	OC IT-CB24 TL74G 09/09/2011	OC IT-CB25 TL74H 09/09/2011	OC IT-CB26 TL74I 09/09/2011	OC IT-CB27 TL74E 09/09/2011	OC IT-CB28 TO80A 9/28/2011	IT-CB29 TL29B 09/07/2011	IT-CB30 TL29C 09/07/2011	OC IT-CB34 TL84A 09/12/2011	OC IT-CB35 TL84B 09/12/2011	OC IT-CB36 TL74B 09/09/2011	OC IT-CB39/86/85 TL74A 09/09/2011	IT-CB60/61 TL29G 09/07/2011
PAHs (mg/kg OC)																			
SW8270DSIM																			
Naphthalene	0.8 U	3.4	1.0	1.5	1.2 J		0.5 U	0.7	0.6	0.6 U	0.3	0.5	7.0 J	0.9	1.3 U	0.9 U	0.8 U	1.4	0.7
Acenaphthylene	0.8 U	2.2 U	0.3 J	0.4	1.7 U		0.5 U	0.3	0.5 U	0.6 U	0.3 U	0.2	4.0 J	0.7	1.3 U	0.9 U	0.8 U	0.9 U	0.2 J
Acenaphthene	0.8 U	2.0 J	1.2	1.1	0.9 J		0.5 U	0.6	0.4 J	0.4 J	0.2 J	0.3	6.9 J	0.9	1.3 U	0.9 U	0.8 U	0.5 J	0.5
Fluorene	0.8 U	2.2	1.3	1.5	1.0 J		0.5 U	0.7	0.4 J	0.5 J	0.3 J	0.4	10.1 J	1.2	1.3 U	0.9 U	0.8 U	0.8 J	0.7
Phenanthrene	2.2	14.7	22.1	11.5	9.6		3.3	7.0	4.7	4.6	4.5	5.8	88.1	15.4	1.3 U	2.8	1.5	9.8	7.3
Anthracene	0.8 U	1.9 J	1.4	0.9	1.0 J		0.3 J	0.6	0.6	0.4 J	0.4	0.6	11.9 J	2.2	1.3 U	0.9 U	0.8 U	0.9 U	0.9
2-Methylnaphthalene	0.8 U	1.6 J	0.4 J	1.3	1.7 U		0.3 J	0.5	0.6	0.4 J	0.3 J	0.3	4.2 J	0.5	1.3 U	0.7 J	0.8 U	0.5 J	0.4
LPAH	2.2	24.2	27.4	16.9	13.7		3.6	9.8	6.7	5.9	5.8	7.7	128.0 J	21.3	ND	2.8	1.5	12.5	10.5
Fluoranthene	3.0	18.8	31.0	14.6	9.6		6.3	10.4	7.2	6.8	8.7	9.0	137.6	24.4	0.8 J	3.4	1.7	11.7	13.0
Pyrene	2.6	18.8	22.1	10.0	8.1		5.2	7.7	6.1	5.0	6.8	6.7	110.1	21.1	0.7 J	3.4	2.0	8.6	9.5
Benzo(a)anthracene	1.1	5.9	8.1	3.3	3.5		2.0	2.7	2.4	1.8	2.8	2.6	35.8	8.1	1.3 U	0.8 J	1.0	1.7	3.7
Chrysene	2.6	11.6	13.3	8.5	6.3		4.3	4.9	4.9	3.6	4.9	4.7	77.1	27.6	2.8	5.0	2.7	5.6	7.0
Total Benzofluoranthenes	2.8	12.2	18.8	10.8	6.0		4.9	6.8	5.3	5.2	7.1	5.8	110.1	34.1	1.3 U	3.0	2.3	5.8	9.9
Benzo(a)pyrene	1.0	5.3	8.9	4.2	3.1		2.1	3.0	2.3	2.1	3.3	2.8	44.0	8.1	1.3 U	1.5	1.1	2.5	4.3
Indeno(1,2,3-cd)pyrene	0.6 J	4.7	6.1	3.5	2.4		1.1	1.7	1.6	1.1	1.7	1.9	33.9	7.9	1.3 U	1.1	0.8 U	1.5	3.1
Dibenz(a,h)anthracene	0.8 U	1.2 J	1.6	0.9	1.7 U		0.6	0.4	0.3 J	0.6 U	0.5	0.6	10.1 J	2.0	1.3 U	1.0	0.8 U	0.9 J	0.9
Benzo(g,h,i)perylene	1.2	7.5	7.1	4.3	3.2		2.0	2.3	2.3	1.7	2.3	2.2	35.8	7.7	1.9	2.4	1.1	2.6	4.0
HPAH	14.9	85.9	116.9	60.2	42.0		28.3	39.8	32.5	27.3	38.1	36.4	594.5	141.2	6.3	21.5	11.9	40.8	55.4
SVOCs (mg/kg OC)																			
SW8270D																			
1,2-Dichlorobenzene	0.9 U	4.4 U	3.1 U	1.7 U	3.5 U		0.8 U	2.4 U	2.5 U	3.0 U	2.1 U	1.7 U	0.5 U	0.5 U	2.7 U	3.6 U	1.0 U	1.1 U	3.1 U
1,3-Dichlorobenzene	0.9 U	4.4 U	3.1 U	1.7 U	3.5 U		0.8 U	2.4 U	2.5 U	3.0 U	2.1 U	1.7 U	0.5 U	0.5 U	2.7 U	3.6 U	1.0 U	1.1 U	3.1 U
1,4-Dichlorobenzene	0.9 U	4.4 U	3.1 U	1.7 U	3.5 U		0.8 U	2.4 U	2.5 U	3.0 U	2.1 U	1.7 U	0.5 U	0.5 U	2.7 U	3.6 U	1.0 U	1.1 U	3.1 U
1,2,4-Trichlorobenzene	0.9 U	4.4 U	3.1 U	1.7 U	3.5 U		0.8 U	2.4 U	2.5 U	3.0 U	2.1 U	1.7 U	0.5 U	0.5 U	2.7 U	3.6 U	1.0 U	1.1 U	3.1 U
Hexachlorobenzene	0.9 U	4.4 U	3.1 U	1.7 U	3.5 U		0.8 U	2.4 U	2.5 U	3.0 U	2.1 U	1.7 U	0.5 U	0.5 U	2.7 U	3.6 U	1.0 U	1.1 U	3.1 U
Dimethylphthalate	0.9 U	4.4 U	3.1 U	1.7 U	3.5 U		0.8	2.0 J	1.3 J	2.7 J	3.8	2.2	13.8	3.7	2.7 U	3.6 U	1.0 U	0.9 J	6.6
Diethylphthalate	2.4 U	10.9 U	7.9 U	4.2 U	8.8 U		2.1 U	6.2 U	6.1 U	7.6 U	5.4 U	4.3 U	1.4 U	1.2 U	6.5 U	9.1 U	2.5 U	2.8 U	7.8 U
Di-n-Butylphthalate	0.9 U	4.4 U	3.1 U	3.3	3.5 U		3.7	3.1	4.2	6.2	8.9	6.0	5.6	0.9	2.7 U	3.6 U	1.0 U	1.8	14.0
Butylbenzylphthalate	1.4	5.5 J	3.1 U	3.6 J	3.5 U		4.0	27.0	12.3	14.5	17.6	8.2	20.2	8.9	2.7 U	6.2 J	1.0 U	4.1	85.3
bis(2-Ethylhexyl)phthalate	28.4	11.3	9.7	23.1	34.6		87.5	52.2	41.0	114.1	87.1	26.1	119.3	18.7	5.9	59.6	9.8	27.6	172.8
Di-n-Octyl phthalate	4.3	4.4 U	3.1 U	1.7 U	3.5 U		26.8	4.3	3.5	2.4 J	1.3 J	1.8	0.5 U	0.5 U	2.7 U	2.6 J	1.0 U	0.6 J	31.3
Dibenzofuran	0.9 U	5.5	12.2	1.0 J	3.5 U		0.8 U	2.4 U	2.5 U	3.0 U	2.1 U	1.7 U	2.9	1.1	2.7 U	3.6 U	1.0 U	5.1	3.1 U
Hexachlorobutadiene	4.8 U	21.9 U	15.5 U	8.5 U	17.6 U		4.2 U	12.2 U	12.3 U	15.6 U	10.6 U	9.0 U	2.8 U	2.4 U	13.3 U	18.1 U	5.0 U	5.6 U	15.1 U
N-Nitrosodiphenylamine	0.9 U	4.4 U	3.1 U	1.7 U	3.5 U		0.8 U	2.4 U	2.5 U	3.0 U	2.1 U	1.7 U	0.5 U	0.5 U	2.7 U	3.6 U	1.0 U	1.1 U	3.1 U
PCBs (mg/kg OC)																			
SW8082																			
Aroclor 1016	0.2 U	0.3 U	0.2 U	0.2 U	0.3 U	0.2 U	0.2 U	0.2 UJ	0.2 U	0.2 U	0.5 U	0.1 U	0.2 U	0.2 U	0.5 U	0.4 U	0.2 U	0.6 U	0.2 U
Aroclor 1242	0.2 U	0.3 U	0.2 U	0.2 U	0.3 U	0.2 U	0.2 U	0.2 UJ	0.2 U	0.2 U	0.5 U	0.1 U	0.2 U	0.2 U	0.5 U	0.4 U	0.2 U	0.6 U	0.2 U
Aroclor 1248	0.4	0.9 U	2.5 U	1.9 U	0.6	0.3 J	0.4	0.2 J	0.2 U	0.2 U	1.2	0.3	1.6 U	0.6 U	0.5 U	0.5	0.2	0.6 U	0.2 U
Aroclor 1254	1.0	2.3	6.6	5.5	1.3	0.8 J	1.1	0.9 J	0.4	0.4	4.0	0.7	4.4	1.5	0.3 J	0.8	0.4	1.2	0.4
Aroclor 1260	1.2 J	2.2 P	2.1	1.6	0.9	0.6 J	1.1 J	0.4 J	0.5 J	0.6 J	1.6 J	0.6	3.8	0.7	0.4 J	0.8	0.6 J	1.1 J	0.5
Aroclor 1221	0.2 U	0.3 U	0.2 U	0.2 U	0.3 U	0.2 U	0.2 U	0.2 UJ	0.2 U	0.2 U	0.5 U	0.1 U	0.2 U	0.2 U	0.5 U	0.4 U	0.2 U	0.6 U	0.2 U
Aroclor 1232	0.2 U	0.3 U	0.2 U	0.2 U	0.3 U	0.2 U	0.2 U	0.2 UJ	0.2 U	0.2 U	0.5 U	0.1 U	0.2 U	0.2 U	0.5 U	0.4 U	0.2 U	0.6 U	0.2 U
Total PCBs	2.7 J	4.5 P	8.7	7.2	2.7	1.7 J	2.6 J	1.5 J	0.9 J	1.0 J	6.8 J	1.5	8.2	2.2	0.7 J	2.1	1.1 J	2.3 J	0.9
CONVENTIONALS																			
Total Organic Carbon (%)	11.6	6.40	9.03	13.0	13.6	11.1	11.2	11.5	12.2	9.64	4.25	13.4	10.9	12.3	3.53	5.03	12.2	16.3	9.26

TABLE N-3
2011 STORM DRAIN ANALYTICAL DATA - CARBON NORMALIZED
ISAACSON THOMPSON

	IT-CB63 TL29F 09/07/2011	IT-CB66/67 TL29I 09/07/2011	OC IT-CB81/82 TL53B 09/08/2011	OC IT-CB83 TL53D 09/08/2011	OC IT-CB90/91 TL53C 09/08/2011	OC IT-CB90B TL53J 09/08/2011	IT-CBA TL29A 09/07/2011	IT-CBB/62/68 TL29H 09/07/2011	OC IT-CBC TL53G 09/08/2011	OC IT-CBD TL53H 09/08/2011	OC IT-CBE/77/77B TL53I 09/08/2011	OC IT-CG72 TL53A 09/08/2011	IT-CG74 TL29D 09/07/2011	OC IT-OWS23 TL53L 09/08/2011	OC IT-OWS79 TL53E 09/08/2011	OC IT-VTVE TL84C 09/12/2011	IT-VTVW TL29E 09/07/2011
PAHs (mg/kg OC)																	
SW8270DSIM																	
Naphthalene	**0.7**	**0.8**	**0.4**	**0.5**	**0.3** J	**0.7** J	**0.6**	**0.8**	**0.5**	**1.7** J	**0.9**	**0.7**	**1.6**	**1.0**	**2.1**	**1.5**	**1.3**
Acenaphthylene	**0.2** J	**0.2**	**0.1** J	**0.2** J	**0.5** U	**1.1** U	**0.3** J	0.5 U	**0.1** J	**1.6** J	**1.7**	0.4 U	**0.3** J	**0.9** U	**0.3** J	**0.8**	**0.4** J
Acenaphthene	**0.6**	**0.4**	**0.2**	**0.5**	**0.5** J	**0.6** J	**0.7**	**0.9**	**0.4**	**1.6**	**4.3**	**0.8**	**1.7**	**0.7** J	**3.4**	**1.8**	**1.0**
Fluorene	**0.9**	**0.5**	**0.3**	**0.4**	**0.8**	**0.7** J	**1.0**	**0.8**	**0.6**	**2.0** J	**4.5**	**1.2**	**2.3**	**0.9** J	**4.0**	**1.3**	**1.3**
Phenanthrene	**10.0**	**6.9**	**3.6**	**5.0**	**5.1**	**4.6**	**7.5**	**9.1**	**4.6**	**7.3**	**49.6**	**8.6**	**15.2**	**6.5**	**25.5**	**11.7**	**7.4**
Anthracene	**0.8**	**0.7**	**0.3**	**0.6**	**0.7**	1.1 U	**1.0**	**1.1**	**0.4**	**1.9** J	**5.6**	**1.0**	**2.5**	**0.7** J	**4.8**	**1.0**	**0.8**
2-Methylnaphthalene	**0.5**	**0.6**	**0.4**	**0.4**	**0.3** J	**0.7** J	**0.5**	**0.6**	**0.4**	**1.6**	**0.6**	**0.5**	**0.7**	**0.6** J	**1.4**	**1.9**	**1.5**
LPAH	**13.3**	**9.5**	**4.9**	**7.3**	**7.4**	**6.6**	**11.0**	**12.7**	**6.6**	**16.1**	**66.6**	**12.3**	**23.7**	**9.8**	**40.1**	**18.0**	**12.3**
Fluoranthene	**16.2**	**12.5**	**4.9**	**7.7**	**7.5**	**7.4**	**10.0**	**16.8**	**7.7**	**10.5**	**89.9**	**12.3**	**17.1**	**9.8**	**31.9**	**17.5**	**8.5**
Pyrene	**12.3**	**10.6**	**3.6**	**5.4**	**5.8**	**5.6**	**7.2**	**13.6**	**5.7**	**7.8**	**68.2**	**8.6**	**12.8**	**7.4**	**24.8**	**13.3**	**6.3**
Benzo(a)anthracene	**4.2**	**3.5**	**1.3**	**1.9**	**2.6**	**2.2**	**3.3**	**6.6**	**1.9**	**3.7**	**34.1**	**3.4**	**5.4**	**2.7**	**10.6**	**4.5**	**2.4**
Chrysene	**8.5**	**7.4**	**2.7**	**4.6**	**4.0**	**5.2**	**5.8**	**12.1**	**3.9**	**6.1**	**38.8**	**6.0**	**7.3**	**7.0**	**13.5**	**11.7**	**6.4**
Total Benzofluoranthenes	**11.5**	**12.0**	**3.5**	**5.2**	**4.9**	**5.8**	**7.3**	**12.8**	**5.3**	**8.4**	**65.1**	**7.4**	**9.8**	**7.4**	**18.4**	**13.3**	**5.6**
Benzo(a)pyrene	**4.8**	**5.1**	**1.5**	**2.1**	**2.2**	**2.2**	**3.3**	**6.6**	**1.9**	**3.7**	**34.1**	**3.3**	**4.8**	**2.8**	**8.5**	**5.5**	**2.5**
Indeno(1,2,3-cd)pyrene	**3.3**	**3.4**	**1.1**	**1.3**	**1.2**	**1.4**	**2.3**	**4.2**	**1.5**	**2.3** J	**15.0**	**2.0**	**2.7**	**2.1**	**3.8**	**4.7**	**1.8**
Dibenz(a,h)anthracene	**1.1**	**0.9**	**0.4**	**0.3**	**0.4** J	**0.9** J	**0.7**	**1.2**	**0.5**	**1.4**	**4.0**	**0.5**	**1.0**	**0.6** J	**1.2**	**1.2**	**0.6** J
Benzo(g,h,i)perylene	**4.1**	**3.9**	**1.6**	**1.4**	**1.6**	**2.7**	**3.9**	**5.0**	**2.4**	**2.5**	**14.0**	**2.1**	**3.7**	**3.5**	**4.3**	**6.3**	**2.7**
HPAH	**65.9**	**59.4**	**20.5**	**30.0**	**30.3**	**33.4**	**43.8**	**78.8**	**30.8**	**46.5**	**363.3**	**45.4**	**64.5**	**43.4**	**117.1**	**78.0**	**36.6**
SVOCs (mg/kg OC)																	
SW8270D																	
1,2-Dichlorobenzene	2.3 U	0.3 U	3.2 U	2.6 U	1.4 U	4.0 U	0.7 U	2.9 U	1.4 U	2.1 U	2.6 U	0.8 U	1.8 U	2.3 U	2.6 U	2.0 U	3.9 U
1,3-Dichlorobenzene	2.3 U	0.3 U	3.2 U	2.6 U	1.4 U	4.0 U	0.7 U	2.9 U	1.4 U	2.1 U	2.6 U	0.8 U	1.8 U	2.3 U	2.6 U	2.0 U	3.9 U
1,4-Dichlorobenzene	2.3 U	0.3 U	3.2 U	2.6 U	1.4 U	4.0 U	0.7 U	2.9 U	1.4 U	2.1 U	2.6 U	0.8 U	1.8 U	2.3 U	2.6 U	2.0 U	3.9 U
1,2,4-Trichlorobenzene	2.3 U	0.3 U	3.2 U	2.6 U	1.4 U	4.0 U	0.7 U	2.9 U	1.4 U	2.1 U	2.6 U	0.8 U	1.8 U	2.3 U	2.6 U	2.0 U	3.9 U
Hexachlorobenzene	2.3 U	0.3 U	3.2 U	2.6 U	1.4 U	4.0 U	0.7 U	2.9 U	1.4 U	2.1 U	2.6 U	0.8 U	1.8 U	2.3 U	2.6 U	2.0 U	3.9 U
Dimethylphthalate	2.3 U	**2.4**	3.2 U	**2.8**	**0.7** J	4.0 U	**3.3**	2.9 U	**2.2**	**2.1**	2.6 U	**1.0**	1.8 U	2.3 U	**2.3** J	2.0 U	3.9 U
Diethylphthalate	5.7 U	0.6 U	8.2 U	6.4 U	3.6 U	10.4 U	1.8 U	7.1 U	3.5 U	5.2 U	6.5 U	2.1 U	4.6 U	5.6 U	6.3 U	4.9 U	9.5 U
Di-n-Butylphthalate	**2.2** J	**3.4**	**167.6**	**1.8** J	**5.8**	4.0 U	**13.9**	**3.0**	**4.8**	**4.4** J	**2.9**	**3.1**	**2.8**	**1.6** J	**4.3**	2.0 U	**4.1**
Butylbenzylphthalate	**2.1** J	**1.6**	**16.8**	**8.4**	**7.1**	**2.6** J	**12.4**	**2.7** J	**19.1**	**12.3** J	**8.2**	**2.5**	**2.1**	**4.2**	**9.9**	**3.1** J	**3.5** J
bis(2-Ethylhexyl)phthalate	**50.8**	**41.7**	**20.1**	**39.8**	**73.0**	**30.4**	**151.7**	**47.1**	**110.0**	**193.0** J	**71.3**	**61.3**	**25.0**	**69.8**	**156.0**	**27.5**	**41.9**
Di-n-Octyl phthalate	**2.5**	**10.6**	**6.4**	2.6 U	**5.1**	4.0 U	**2.4**	**15.1**	**18.2** J	**18.4**	**2.8**	**2.0**	**6.1**	9.3	**12.8**	**1.1** J	3.9 U
Dibenzofuran	2.3 U	**0.4**	3.2 U	2.6 U	1.4 U	4.0 U	**0.4** J	2.9 U	1.4 U	2.1 U	2.6 U	**0.7** J	1.8 U	2.3 U	**1.6** J	2.0 U	3.9 U
Hexachlorobutadiene	11.5 U	1.3 U	16.8 U	12.4 U	7.1 U	20.0 U	3.5 U	14.1 U	7.2 U	10.5 U	13.0 U	4.1 U	9.1 U	11.6 U	12.8 U	10.0 U	19.0 U
N-Nitrosodiphenylamine	2.3 U	**0.2** J	3.2 U	2.6 U	1.4 U	4.0 U	0.7 U	2.9 U	1.4 U	2.1 U	2.6 U	0.8 U	1.8 U	2.3 U	2.6 U	2.0 U	3.9 U
PCBs (mg/kg OC)																	
SW8082																	
Aroclor 1016	0.2 U	0.1 U	0.2 U	0.1 U	0.4 U	0.2 U	0.3 U	0.3 U	0.1 U	0.2 U	0.3 U	0.1 U	0.1 U	0.2 U	0.1 U	0.3 U	0.2 U
Aroclor 1242	0.2 U	0.1 U	0.2 U	0.1 U	0.4 U	0.2 U	0.3 U	0.3 U	0.1 U	0.2 U	0.3 U	0.1 U	0.1 U	0.2 U	0.1 U	0.3 U	0.2 U
Aroclor 1248	0.3 U	**0.2**	0.2 U	0.5 U	0.4 U	**0.3**	0.7 U	**0.4**	0.3 U	0.4 U	0.3 U	0.6 U	0.9 U	**0.4**	0.5 U	1.6 U	0.8 U
Aroclor 1254	**0.6**	**0.4**	**0.6** J	**1.6** J	**0.8** J	**0.8**	**2.0**	**1.1**	**0.5** J	**1.5** J	**0.7**	**1.8** J	**1.7**	**1.0**	**1.3** J	**4.8**	**1.2**
Aroclor 1260	**0.7**	**0.6**	**0.6**	**1.0**	**0.7**	**0.7**	**1.2**	**0.9**	**0.7**	**1.2** P	**0.7**	**2.0**	**0.6**	**0.7**	**1.3**	**1.7**	**1.0**
Aroclor 1221	0.2 U	0.1 U	0.2 U	0.1 U	0.4 U	0.2 U	0.3 U	0.3 U	0.1 U	0.2 U	0.3 U	0.1 U	0.1 U	0.2 U	0.1 U	0.3 U	0.2 U
Aroclor 1232	0.2 U	0.1 U	0.2 U	0.1 U	0.4 U	0.2 U	0.3 U	0.3 U	0.1 U	0.2 U	0.3 U	0.1 U	0.1 U	0.2 U	0.1 U	0.3 U	0.2 U
Total PCBs	**1.3**	**1.1**	**1.2** J	**2.6** J	**1.5** J	**1.8**	**3.2**	**2.5**	**1.1** J	**2.7** JP	**1.4**	**3.9** J	**2.3**	**2.2**	**2.6** J	**6.4**	**2.2**
CONVENTIONALS																	
Total Organic Carbon (%)	**13.0**	**21.6**	**8.95**	**11.3**	**5.48**	**12.5**	**7.91**	**5.95**	**20.9**	**11.4**	**6.45**	**16.3**	**16.4**	**21.5**	**14.1**	**12.0**	**10.5**

U = Indicates the compound was not detected at the reported concentration.
UJ = The analyte was not detected in the sample; the reported sample reporting limit is an estimate.
J = Indicates the analyte was positively identified; the associated numerical value is the approximate concentration of the analyte in the sample.
P = The analyte was detected on both chromatographic columns but the quantified values differ by 40% relative percent difference (RPD) with no obvious chromatographic interference. The higher of the two values is reported by the laboratory.

Bold = Detected compound.
mg/kg = milligrams per kilogram
PCB = polychlorinated biphenyl

SIM = select ion monitoring
HPAH = high molecular weight polycyclic aromatic hydrocarbons
LPAH = low molecular weight polycyclic aromatic hydrocarbons

TABLE N-4
TEST PIT SOIL ANALYTICAL RESULTS
BOEING ISAACSON-THOMPSON
REMEDIAL INVESTIGATION

	IT-CB-66/67 6607151 1300346 04/03/2012			IT-CB-77/77B/77E 6607152 1300346 04/03/2012			IT-CB-C/D 6607153 1300346 04/03/2012			IT-CG-72 6607158 1300346 04/04/2012			IT-CG-74 6607157 1300346 04/04/2012		
	Result	Reporting Limit	Detection Limit	Result	Reporting Limit	Detection Limit	Result	Reporting Limit	Detection Limit	Result	Reporting Limit	Detection Limit	Result	Reporting Limit	Detection Limit
SEMIVOLATILES (µg/kg)															
Method SW8270D															
Benzoic Acid	20,000 U	60,000	20,000	81,000 U	240,000	81,000	100,000 U	310,000	100,000	58,000 U	170,000	58,000	84,000 U	250,000	84,000
Benzyl Alcohol	4000 U	6000	4000	16,000 U	24,000	16,000	20,000 U	31,000	20,000	**27,000**	17,000	12,000	17,000 U	25,000	17,000
4-Bromophenyl-phenylether	2000 U	4000	2000	8100 U	16,000	8100	10,000 U	20,000	10,000	5800 U	12,000	5800	8400 U	17,000	8400
Butylbenzylphthalate	8000 U	20,000	8000	32,000 U	81,000	32,000	41,000 U	100,000	41,000	23,000 U	58,000	23,000	34,000 U	84,000	34,000
Di-n-Butylphthalate	8000 U	20,000	8000	32,000 U	81,000	32,000	41,000 U	100,000	41,000	23,000 U	58,000	23,000	34,000 U	84,000	34,000
Carbazole	**6000**	4000	2000	8100 U	16,000	8100	10,000 U	20,000	10,000	5800 U	12,000	5800	8400 U	17,000	8400
4-Chloro-3-methylphenol	2000 U	4000	2000	8100 U	16,000	8100	10,000 U	20,000	10,000	5800 U	12,000	5800	8400 U	17,000	8400
4-Chloroaniline	2000 U	4000	2000	8100 U	16,000	8100	10,000 U	20,000	10,000	5800 U	12,000	5800	8400 U	17,000	8400
bis(2-Chloroethoxy) Methane	2000 U	4000	2000	8100 U	16,000	8100	10,000 U	20,000	10,000	5800 U	12,000	5800	8400 U	17,000	8400
Bis-(2-Chloroethyl) Ether	2000 U	4000	2000	8100 U	16,000	8100	10,000 U	20,000	10,000	5800 U	12,000	5800	8400 U	17,000	8400
2-Chloronaphthalene	840 U	4000	840	3400 U	16,000	3400	4300 U	20,000	4300	2400 U	11,000	2400	3500 U	17,000	3500
2-Chlorophenol	2000 U	4000	2000	8100 U	16,000	8100	10,000 U	20,000	10,000	5800 U	12,000	5800	8400 U	17,000	8400
4-Chlorophenyl-phenylether	2000 U	4000	2000	8100 U	16,000	8100	10,000 U	20,000	10,000	5800 U	12,000	5800	8400 U	17,000	8400
2,2'-Oxybis(1-Chloropropane)	2000 U	4000	2000	8100 U	16,000	8100	10,000 U	20,000	10,000	5800 U	12,000	5800	8400 U	17,000	8400
1,2-Dichlorobenzene	2000 U	4000	2000	8100 U	16,000	8100	10,000 U	20,000	10,000	5800 U	12,000	5800	8400 U	17,000	8400
1,3-Dichlorobenzene	2000 U	4000	2000	8100 U	16,000	8100	10,000 U	20,000	10,000	5800 U	12,000	5800	8400 U	17,000	8400
1,4-Dichlorobenzene	2000 U	4000	2000	8100 U	16,000	8100	10,000 U	20,000	10,000	5800 U	12,000	5800	8400 U	17,000	8400
3,3'-Dichlorobenzidine	12,000 U	40,000	12,000	48,000 U	160,000	48,000	61,000 U	200,000	61,000	35,000 U	120,000	35,000	51,000 U	170,000	51,000
2,4-Dichlorophenol	2000 U	4000	2000	8100 U	16,000	8100	10,000 U	20,000	10,000	5800 U	12,000	5800	8400 U	17,000	8400
Diethylphthalate	8000 U	20,000	8000	32,000 U	81,000	32,000	41,000 U	100,000	41,000	23,000 U	58,000	23,000	34,000 U	84,000	34,000
2,4-Dimethylphenol	1200 U	2000	1200	4800 U	8100	4800	6100 U	10,000	6100	3500 U	5800	3500	5100 U	8400	5100
Dimethylphthalate	8000 U	20,000	8000	32,000 U	81,000	32,000	41,000 U	100,000	41,000	23,000 U	58,000	23,000	34,000 U	84,000	34,000
4,6-Dinitro-2-Methylphenol	20,000 U	60,000	20,000	81,000 U	240,000	81,000	100,000 U	310,000	100,000	58,000 U	170,000	58,000	84,000 U	250,000	84,000
2,4-Dinitrophenol	36,000 U	120,000	36,000	150,000 U	480,000	150,000	180,000 U	610,000	180,000	100,000 U	350,000	100,000	150,000 U	510,000	150,000
2,4-Dinitrotoluene	8000 U	20,000	8000	32,000 U	81,000	32,000	41,000 U	100,000	41,000	23,000 U	58,000	23,000	34,000 U	84,000	34,000
2,6-Dinitrotoluene	2000 U	4000	2000	8100 U	16,000	8100	10,000 U	20,000	10,000	5800 U	12,000	5800	8400 U	17,000	8400
bis(2-Ethylhexyl)phthalate	**71,000**	20,000	8000	32,000 U	82,000	32,000	41,000 U	100,000	41,000	**75,000**	59,000	23,000	**41,000** J1	86,000	34,000
Hexachlorobenzene	400 U	2000	400	1600 U	8200	1600	2000 U	10,000	2000	1200 U	5900	1200	1700 U	8600	1700
Hexachlorobutadiene	1200 U	2000	1200	4800 U	8100	4800	6100 U	10,000	6100	3500 U	5800	3500	5100 U	8400	5100
Hexachlorocyclopentadiene	20,000 U	60,000	20,000	81,000 U	240,000	81,000	100,000 U	310,000	100,000	58,000 U	170,000	58,000	84,000 U	250,000	84,000
Hexachloroethane	4000 U	20,000	4000	16,000 U	81,000	16,000	20,000 U	100,000	20,000	12,000 U	58,000	12,000	17,000 U	84,000	17,000
Isophorone	2000 U	4000	2000	8100 U	16,000	8100	10,000 U	20,000	10,000	5800 U	12,000	5800	8400 U	17,000	8400
1-Methylnaphthalene	**1000** J1	2000	400	1600 U	8200	1600	2000 U	10,000	2000	1200 U	5900	1200	1700 U	8600	1700
2-Methylphenol	1200 U	2000	1200	4800 U	8100	4800	6100 U	10,000	6100	3500 U	5800	3500	5100 U	8400	5100
4-Methylphenol	**18,000**	4000	2000	**8200** J1	16,000	8100	10,000 U	20,000	10,000	**6400** J1	12,000	5800	**9200** J1	17,000	8400
2-Nitroaniline	2000 U	4000	2000	8100 U	16,000	8100	10,000 U	20,000	10,000	5800 U	12,000	5800	8400 U	17,000	8400
3-Nitroaniline	8000 U	20,000	8000	32,000 U	81,000	32,000	41,000 U	100,000	41,000	23,000 U	58,000	23,000	34,000 U	84,000	34,000
4-Nitroaniline	8000 U	20,000	8000	32,000 U	81,000	32,000	41,000 U	100,000	41,000	23,000 U	58,000	23,000	34,000 U	84,000	34,000
Nitrobenzene	2000 U	4000	2000	8100 U	16,000	8100	10,000 U	20,000	10,000	5800 U	12,000	5800	8400 U	17,000	8400
2-Nitrophenol	2000 U	4000	2000	8100 U	16,000	8100	10,000 U	20,000	10,000	5800 U	12,000	5800	8400 U	17,000	8400
4-Nitrophenol	20,000 U	60,000	20,000	81,000 U	240,000	81,000	100,000 U	310,000	100,000	58,000 U	170,000	58,000	84,000 U	250,000	84,000
N-Nitroso-Di-N-Propylamine	2000 U	4000	2000	8100 U	16,000	8100	10,000 U	20,000	10,000	5800 U	12,000	5800	8400 U	17,000	8400
N-Nitrosodiphenylamine	1200 U	2000	1200	4800 U	8100	4800	6100 U	10,000	6100	3500 U	5800	3500	5100 U	8400	5100
Di-n-Octyl phthalate	8000 U	20,000	8000	32,000 U	81,000	32,000	41,000 U	100,000	41,000	23,000 U	58,000	23,000	34,000 U	84,000	34,000
Pentachlorophenol	4000 U	20,000	4000	16,000 U	82,000	16,000	20,000 U	100,000	20,000	12,000 U	59,000	12,000	17,000 U	86,000	17,000
Phenol	2000 U	4000	2000	8100 U	16,000	8100	10,000 U	20,000	10,000	5800 U	12,000	5800	8400 U	17,000	8400
1,2,4-Trichlorobenzene	2000 U	4000	2000	8100 U	16,000	8100	10,000 U	20,000	10,000	5800 U	12,000	5800	8400 U	17,000	8400
2,4,5-Trichlorophenol	2000 U	4000	2000	8100 U	16,000	8100	10,000 U	20,000	10,000	5800 U	12,000	5800	8400 U	17,000	8400
2,4,6-Trichlorophenol	2000 U	4000	2000	8100 U	16,000	8100	10,000 U	20,000	10,000	5800 U	12,000	5800	8400 U	17,000	8400

TABLE N-4
TEST PIT SOIL ANALYTICAL RESULTS
BOEING ISAACSON-THOMPSON
REMEDIAL INVESTIGATION

	IT-CB-66/67 6607151 1300346 04/03/2012			IT-CB-77/77B/77E 6607152 1300346 04/03/2012			IT-CB-C/D 6607153 1300346 04/03/2012			IT-CG-72 6607158 1300346 04/04/2012			IT-CG-74 6607157 1300346 04/04/2012		
	Result	Reporting Limit	Detection Limit	Result	Reporting Limit	Detection Limit	Result	Reporting Limit	Detection Limit	Result	Reporting Limit	Detection Limit	Result	Reporting Limit	Detection Limit
PAHs (µg/kg)															
Method SW8270D-SIM															
Acenaphthene	**4000**	710	280	**530** J. J1	540	220	**420** J1	680	270	**880** J	240	98	**770**	560	220
Acenaphthylene	**650** J1	710	140	**210** J. J1	540	110	140 U	680	140	**96** J, J1	240	49	**150** J1	560	110
Anthracene	**7200**	710	140	**1800** J	540	110	**670** J1	680	140	**1300** J	240	49	**1500**	560	110
Benzo(a)anthracene	**12,000**	710	280	**3900** J	540	220	**2000**	680	270	**3200** J	240	98	**5500**	560	220
Benzo(a)pyrene	**12,000**	710	280	**3200** J	540	220	**2300**	680	270	**3000** J	240	98	**5200**	560	220
Benzo(b)fluoranthene	**21,000**	710	280	**5500** J	540	220	**5000**	680	270	**5000** J	240	98	**9200**	560	220
Benzo(g,h,i)perylene	**3500**	710	280	**1400** J	540	220	**940**	680	270	**1700**	240	98	**2300**	560	220
Benzo(k)fluoranthene	**9500**	710	280	**2700** J	540	220	**1900**	680	270	**1800**	240	98	**4200**	560	220
Chrysene	**15,000**	710	140	**5400** J	540	110	**3500**	680	140	**4000** J	240	49	**7000**	560	110
Dibenz(a,h)anthracene	**1100**	710	280	**400** J. J1	540	220	270 U	680	270	**330**	240	98	**690**	560	220
Dibenzofuran	**2900**	710	280	**430** J. J1	540	220	**290** J1	680	270	**530**	240	98	**530** J1	560	220
Fluoranthene	**38,000**	710	280	**11,000** J	540	220	**6800**	680	270	**9100**	240	98	**16,000**	560	220
Fluorene	**4600**	710	280	**660** J	540	220	**480** J1	680	270	**860** J	240	98	**830**	560	220
Indeno(1,2,3-cd)pyrene	**3800**	710	280	**1200** J	540	220	**810**	680	270	**1400**	240	98	**2300**	560	220
2-Methylnaphthalene	**1600**	710	280	**300** J. J1	540	220	270 U	680	270	**280** J	240	98	**260** J1	560	220
Naphthalene	**3500**	710	280	**700** J	540	220	**500** J1	680	270	**450** J	240	98	**550** J1	560	220
Total Naphthalenes	**5100**	NA	NA	**1000** J	NA	NA	**500** J	NA	NA	**730** J	NA	NA	**810** J	NA	NA
Phenanthrene	**33,000**	710	280	**8200** J	540	220	**4500**	680	270	**7300** J	240	98	**8600**	560	220
Pyrene	**30,000**	710	280	**13,000** J	540	220	**5100**	680	270	**7100** J	240	98	**10,000**	560	220
cPAH TEQ	**16,890**	NA	NA	**4624** J	NA	NA	**3306**	NA	NA	**4213** J	NA	NA	**7459**	NA	NA
PCBs (µg/kg)															
Method SW8082															
Aroclor 1016	31 U	140	31	23 U	110	23	29 U	140	29	18 U	83	18	24 U	110	24
Aroclor 1221	39 U	140	39	30 U	110	30	38 U	140	38	22 U	83	22	31 U	110	31
Aroclor 1232	68 U	140	68	52 U	110	52	65 U	140	65	39 U	83	39	54 U	110	54
Aroclor 1242	28 U	140	28	21 U	110	21	27 U	140	27	16 U	83	16	22 U	110	22
Aroclor 1248	28 U	140	28	21 U	110	21	27 U	140	27	16 U	83	16	22 U	110	22
Aroclor 1254	**190** J	140	28	**92** J, J1	110	21	**270** J	140	27	**250** J	83	16	**260** J	110	22
Aroclor 1260	**130** J, J1	140	42	**110** J	110	32	40 U	140	40	**150** J	83	24	**190** J	110	33
Total PCBs	**320** J	NA	NA	**202** J	NA	NA	**270** J	NA	NA	**400** J	NA	NA	**450** J	NA	NA
TOTAL METALS (mg/kg)															
Methods 6010B/6020															
Antimony	**12.5**	0.834	0.309	**3.06**	0.633	0.234	**5.30**	0.808	0.299	**2.91**	0.489	0.181	**8.87**	0.654	0.242
Arsenic	**30.8**	8.34	2.29	**14.8**	6.33	1.74	**22.7**	8.08	2.22	**8.88**	4.89	1.34	**11.5**	6.54	1.80
Barium	**229**	2.09	0.0751	**221**	1.58	0.0569	**313**	2.02	0.0727	**120**	1.22	0.0440	**147**	1.63	0.0588
Beryllium	**0.259** J1	2.09	0.0584	**0.262** J1	1.58	0.0443	**0.327** J1	2.02	0.0566	**0.152** J1	1.22	0.0342	**0.229** J1	1.63	0.0458
Cadmium	**13.4**	2.09	0.0834	**10.1**	1.58	0.0633	**69.2**	2.02	0.0808	**4.59**	1.22	0.0489	**8.61**	1.63	0.0654
Chromium	**168**	6.26	0.584	**156**	4.74	0.443	**178**	6.06	0.566	**78.6**	3.67	0.342	**148**	4.90	0.458
Copper	**268**	4.17	0.401	**180**	3.16	0.304	**265**	4.04	0.388	**98.6**	2.44	0.235	**174**	3.27	0.314
Lead	**294**	6.26	0.918	**92.9**	4.74	0.696	**137**	6.06	0.889	**98.3**	3.67	0.538	**169**	4.90	0.719
Nickel	**78.8**	4.17	0.413	**64.8**	3.16	0.313	**94.9**	4.04	0.400	**41.8**	2.44	0.242	**75.8**	3.27	0.324
Selenium	2.84 U	8.34	2.84	2.15 U	6.33	2.15	2.75 U	8.08	2.75	1.66 U	4.89	1.66	2.22 U	6.54	2.22
Silver	**1.94** J1	2.09	0.346	**2.00**	1.58	0.262	**2.68**	2.02	0.335	**1.11** J1	1.22	0.203	**1.84**	1.63	0.271
Zinc	**2260**	8.34	1.38	**1050**	6.33	1.04	**1660**	8.08	1.33	**691**	4.89	0.807	**1150**	6.54	1.08
Method SW7199															
Chromium VI	**11.1**	4.4	0.89	0.65 U	3.3	0.65	**10.1**	4.0	0.79	**3.5**	2.4	0.47	**1.1** J1	3.3	0.67
Method SW7471A															
Mercury	**0.168** J1	0.403	0.0284	**0.769**	0.309	0.0218	**0.183** J1	0.396	0.0278	**0.0866** J1	0.229	0.0161	**0.142** J1	0.322	0.0226

TABLE N-4
TEST PIT SOIL ANALYTICAL RESULTS
BOEING ISAACSON-THOMPSON
REMEDIAL INVESTIGATION

	IT-CJM-07 6612537 1301439 04/10/2012			IT-CJM-08 6612538 1301439 04/10/2012			IT-PAINT-01-120410 6612539 1301439 04/10/2012			IT-PAINT-02 6612540 1301439 04/10/2012			IT-PAINT-03 6612541 1301439 04/10/2012		
	Result	Reporting Limit	Detection Limit	Result	Reporting Limit	Detection Limit	Result	Reporting Limit	Detection Limit	Result	Reporting Limit	Detection Limit	Result	Reporting Limit	Detection Limit
SEMIVOLATILES (µg/kg)															
Method SW8270D															
Benzoic Acid	25,000 UJ	75,000	25,000	25,000 U	75,000	25,000	**1900** J1	3000	1000	**37,000**	30,000	10,000	**70,000**	30,000	10,000
Benzyl Alcohol	5000 U	7500	5000	5000 U	7500	5000	200 U	300	200	2000 U	3000	2000	2000 U	3000	2000
4-Bromophenyl-phenylether	2500 U	5000	2500	2500 U	5000	2500	100 U	200	100	1000 U	2000	1000	1000 U	2000	1000
Butylbenzylphthalate	10,000 U	25,000	10,000	10,000 U	25,000	10,000	400 U	1000	400	4000 U	10,000	4000	4000 U	10,000	4000
Di-n-Butylphthalate	10,000 UJ	25,000	10,000	10,000 U	25,000	10,000	**1700**	1000	400	4000 U	10,000	4000	4000 U	10,000	4000
Carbazole	2500 U	5000	2500	2500 U	5000	2500	100 U	200	100	1000 U	2000	1000	1000 U	2000	1000
4-Chloro-3-methylphenol	2500 U	5000	2500	2500 U	5000	2500	100 U	200	100	1000 U	2000	1000	1000 U	2000	1000
4-Chloroaniline	2500 U	5000	2500	2500 U	5000	2500	100 U	200	100	1000 U	2000	1000	1000 U	2000	1000
bis(2-Chloroethoxy) Methane	2500 U	5000	2500	2500 U	5000	2500	100 U	200	100	1000 U	2000	1000	1000 U	2000	1000
Bis-(2-Chloroethyl) Ether	2500 U	5000	2500	2500 U	5000	2500	100 U	200	100	1000 U	2000	1000	1000 U	2000	1000
2-Chloronaphthalene	1100 U	5000	1100	1100 U	5000	1100	42 U	200	42	420 U	2000	420	420 U	2000	420
2-Chlorophenol	2500 U	5000	2500	2500 U	5000	2500	100 U	200	100	1000 U	2000	1000	1000 U	2000	1000
4-Chlorophenyl-phenylether	2500 U	5000	2500	2500 U	5000	2500	100 U	200	100	1000 U	2000	1000	1000 U	2000	1000
2,2'-Oxybis(1-Chloropropane)	2500 U	5000	2500	2500 U	5000	2500	100 U	200	100	1000 U	2000	1000	1000 U	2000	1000
1,2-Dichlorobenzene	2500 U	5000	2500	2500 U	5000	2500	100 U	200	100	1000 U	2000	1000	1000 U	2000	1000
1,3-Dichlorobenzene	2500 U	5000	2500	2500 U	5000	2500	100 U	200	100	1000 U	2000	1000	1000 U	2000	1000
1,4-Dichlorobenzene	2500 U	5000	2500	2500 U	5000	2500	100 U	200	100	1000 U	2000	1000	**6400**	2000	1000
3,3'-Dichlorobenzidine	15,000 UJ	50,000	15,000	15,000 U	50,000	15,000	600 U	2000	600	6000 U	20,000	6000	6000 U	20,000	6000
2,4-Dichlorophenol	2500 U	5000	2500	2500 U	5000	2500	100 U	200	100	1000 U	2000	1000	1000 U	2000	1000
Diethylphthalate	10,000 UJ	25,000	10,000	10,000 U	25,000	10,000	400 U	1000	400	4000 U	10,000	4000	4000 U	10,000	4000
2,4-Dimethylphenol	1500 U	2500	1500	1500 U	2500	1500	60 U	100	60	600 U	1000	600	600 U	1000	600
Dimethylphthalate	10,000 UJ	25,000	10,000	10,000 U	25,000	10,000	400 U	1000	400	4000 U	10,000	4000	4000 U	10,000	4000
4,6-Dinitro-2-Methylphenol	25,000 UJ	75,000	25,000	25,000 U	75,000	25,000	1000 U	3000	1000	10,000 U	30,000	10,000	10,000 U	30,000	10,000
2,4-Dinitrophenol	45,000 UJ	150,000	45,000	45,000 U	150,000	45,000	1800 U	6000	1800	18,000 U	60,000	18,000	18,000 U	60,000	18,000
2,4-Dinitrotoluene	10,000 UJ	25,000	10,000	10,000 U	25,000	10,000	400 U	1000	400	4000 U	10,000	4000	4000 U	10,000	4000
2,6-Dinitrotoluene	2500 U	5000	2500	2500 U	5000	2500	100 U	200	100	1000 U	2000	1000	1000 U	2000	1000
bis(2-Ethylhexyl)phthalate	10,000 U	26,000	10,000	**24,000** J1	26,000	10,000	**670,000**	51,000	20,000	**1,100,000**	100,000	40,000	**3,800,000**	200,000	80,000
Hexachlorobenzene	500 U	2600	500	500 U	2600	500	20 U	100	20	200 U	1000	200	200 U	1000	200
Hexachlorobutadiene	1500 U	2500	1500	1500 U	2500	1500	60 U	100	60	600 U	1000	600	600 U	1000	600
Hexachlorocyclopentadiene	25,000 UJ	75,000	25,000	25,000 U	75,000	25,000	1000 U	3000	1000	10,000 U	30,000	10,000	10,000 U	30,000	10,000
Hexachloroethane	5000 U	25,000	5000	5000 U	25,000	5000	200 U	1000	200	2000 U	10,000	2000	2000 U	10,000	2000
Isophorone	2500 U	5000	2500	2500 U	5000	2500	100 U	200	100	1000 U	2000	1000	1000 U	2000	1000
1-Methylnaphthalene	500 U	2600	500	500 U	2600	500	20 U	100	20	200 U	1000	200	200 U	1000	200
2-Methylphenol	1500 U	2500	1500	1500 U	2500	1500	60 U	100	60	600 U	1000	600	600 U	1000	600
4-Methylphenol	2500 U	5000	2500	2500 U	5000	2500	100 U	200	100	1000 U	2000	1000	1000 U	2000	1000
2-Nitroaniline	2500 U	5000	2500	2500 U	5000	2500	100 U	200	100	1000 U	2000	1000	1000 U	2000	1000
3-Nitroaniline	10,000 UJ	25,000	10,000	10,000 U	25,000	10,000	400 U	1000	400	4000 U	10,000	4000	4000 U	10,000	4000
4-Nitroaniline	10,000 UJ	25,000	10,000	10,000 U	25,000	10,000	400 U	1000	400	4000 U	10,000	4000	4000 U	10,000	4000
Nitrobenzene	2500 U	5000	2500	2500 U	5000	2500	100 U	200	100	1000 U	2000	1000	1000 U	2000	1000
2-Nitrophenol	2500 U	5000	2500	2500 U	5000	2500	100 U	200	100	1000 U	2000	1000	1000 U	2000	1000
4-Nitrophenol	25,000 UJ	75,000	25,000	25,000 U	75,000	25,000	1000 U	3000	1000	10,000 U	30,000	10,000	10,000 U	30,000	10,000
N-Nitroso-Di-N-Propylamine	2500 U	5000	2500	2500 U	5000	2500	100 U	200	100	1000 U	2000	1000	1000 U	2000	1000
N-Nitrosodiphenylamine	1500 U	2500	1500	1500 U	2500	1500	60 U	100	60	600 U	1000	600	600 U	1000	600
Di-n-Octyl phthalate	10,000 U	25,000	10,000	10,000 U	25,000	10,000	400 U	1000	400	4000 U	10,000	4000	4000 U	10,000	4000
Pentachlorophenol	5000 U	26,000	5000	5000 U	26,000	5000	200 U	1000	200	2000 U	10,000	2000	2000 U	10,000	2000
Phenol	2500 U	5000	2500	2500 U	5000	2500	100 U	200	100	1000 U	2000	1000	1000 U	2000	1000
1,2,4-Trichlorobenzene	2500 U	5000	2500	2500 U	5000	2500	100 U	200	100	1000 U	2000	1000	1000 U	2000	1000
2,4,5-Trichlorophenol	2500 U	5000	2500	2500 U	5000	2500	100 U	200	100	1000 U	2000	1000	1000 U	2000	1000
2,4,6-Trichlorophenol	2500 U	5000	2500	2500 U	5000	2500	100 U	200	100	1000 U	2000	1000	1000 U	2000	1000

TABLE N-4
TEST PIT SOIL ANALYTICAL RESULTS
BOEING ISAACSON-THOMPSON
REMEDIAL INVESTIGATION

	IT-CJM-07 6612537 1301439 04/10/2012			IT-CJM-08 6612538 1301439 04/10/2012			IT-PAINT-01-120410 6612539 1301439 04/10/2012			IT-PAINT-02 6612540 1301439 04/10/2012			IT-PAINT-03 6612541 1301439 04/10/2012		
	Result	Reporting Limit	Detection Limit	Result	Reporting Limit	Detection Limit	Result	Reporting Limit	Detection Limit	Result	Reporting Limit	Detection Limit	Result	Reporting Limit	Detection Limit
PAHs (µg/kg)															
Method SW8270D-SIM															
Acenaphthene	200 U	500	200	200 U	500	200	400 U	1000	400	400 U	1000	400	200 U	500	200
Acenaphthylene	100 U	500	100	100 U	500	100	200 U	1000	200	200 U	1000	200	100 U	500	100
Anthracene	100 U	500	100	**300** J, J1	500	100	200 U	1000	200	200 U	1000	200	100 U	500	100
Benzo(a)anthracene	**610**	500	200	**8200**	500	200	400 U	1000	400	400 U	1000	400	200 U	500	200
Benzo(a)pyrene	**1800**	500	200	**8000**	500	200	400 U	1000	400	400 U	1000	400	200 U	500	200
Benzo(b)fluoranthene	**1000**	500	200	**22,000**	500	200	400 U	1000	400	400 U	1000	400	200 U	500	200
Benzo(g,h,i)perylene	**690**	500	200	**1500**	500	200	400 U	1000	400	400 U	1000	400	200 U	500	200
Benzo(k)fluoranthene	**210** J1	500	200	**6700**	500	200	400 U	1000	400	400 U	1000	400	200 U	500	200
Chrysene	**1500**	500	100	**13,000**	500	100	200 U	1000	200	200 U	1000	200	100 U	500	100
Dibenz(a,h)anthracene	**480** J1	500	200	**780**	500	200	400 U	1000	400	400 U	1000	400	200 U	500	200
Dibenzofuran	200 UJ	500	200	200 U	500	200	400 U	1000	400	400 U	1000	400	200 U	500	200
Fluoranthene	**520** J	500	200	**10,000**	500	200	400 U	1000	400	400 U	1000	400	**300** J1	500	200
Fluorene	200 U	500	200	200 U	500	200	400 U	1000	400	400 U	1000	400	200 U	500	200
Indeno(1,2,3-cd)pyrene	**430** J1	500	200	**1800**	500	200	400 U	1000	400	400 U	1000	400	200 U	500	200
2-Methylnaphthalene	200 U	500	200	200 U	500	200	400 U	1000	400	400 U	1000	400	200 U	500	200
Naphthalene	200 U	500	200	200 U	500	200	**520** J1	1000	400	**470** J1	1000	400	200 U	500	200
Total Naphthalenes	NA	NA	NA	NA	NA	NA	**520** J	NA	NA	**470** J	NA	NA	NA	NA	NA
Phenanthrene	200 U	500	200	**870**	500	200	**890** J1	1000	400	**890** J1	1000	400	**290** J1	500	200
Pyrene	**7000** J	500	200	**18,000** J	500	200	400 U	1000	400	400 U	1000	400	**220** J1	500	200
cPAH TEQ	**2088** J	NA	NA	**12,078**	NA	NA	ND	NA	NA	ND	NA	NA	ND	NA	NA
PCBs (µg/kg)															
Method SW8082															
Aroclor 1016	72 U	340	72	7200 U	34,000	7200	72 U	340	72	72 U	340	72	72 U	340	72
Aroclor 1221	92 U	340	92	9200 U	34,000	9200	92 U	340	92	92 U	340	92	92 U	340	92
Aroclor 1232	160 U	340	160	16,000 U	34,000	16,000	160 U	340	160	160 U	340	160	160 U	340	160
Aroclor 1242	66 U	340	66	6600 U	34,000	6600	66 U	340	66	66 U	340	66	66 U	340	66
Aroclor 1248	66 U	340	66	6600 U	34,000	6600	66 U	340	66	**470**	340	66	**430**	340	66
Aroclor 1254	**620**	340	66	**79,000** J	34,000	6600	**120** J1	340	66	**440**	340	66	**190** J1	340	66
Aroclor 1260	98 U	340	98	9800 U	34,000	9800	98 U	340	98	**200** J1	340	98	98 U	340	98
Total PCBs	**620**	NA	NA	**79,000** J	NA	NA	**120** J	NA	NA	**1110**	NA	NA	**620** J	NA	NA
TOTAL METALS (mg/kg)															
Methods 6010B/6020															
Antimony	NA	NA	NA	NA	NA	NA	**0.263**	0.192	0.0712	**5.54**	0.200	0.0740	**58.8**	0.377	0.140
Arsenic	NA	NA	NA	NA	NA	NA	**4.49** J1	9.62	2.64	**20.5** J1	40.0	11.0	**20.5**	18.9	5.19
Barium	NA	NA	NA	NA	NA	NA	**2160**	2.40	0.0865	**6030**	10.0	0.360	**310**	0.943	0.0340
Beryllium	NA	NA	NA	NA	NA	NA	**0.137** J1	0.481	0.0135	**0.0210** J1	0.500	0.0140	0.0264 U	0.943	0.0264
Cadmium	NA	NA	NA	NA	NA	NA	**2.00**	0.481	0.0192	**3.31**	0.500	0.0200	**7.94**	0.943	0.0377
Chromium	NA	NA	NA	NA	NA	NA	**4200**	7.21	0.673	**17,800**	30.0	2.80	**1580**	2.83	0.264
Copper	NA	NA	NA	NA	NA	NA	**31.5**	0.962	0.0923	**42.3**	1.00	0.0960	**231**	1.89	0.181
Lead	NA	NA	NA	NA	NA	NA	**16,300**	28.8	4.23	**71,300**	150	22.0	**14,600**	14.2	2.08
Nickel	NA	NA	NA	NA	NA	NA	**18.2**	0.962	0.0952	**38.6**	1.00	0.0990	**60.1**	1.89	0.187
Selenium	NA	NA	NA	NA	NA	NA	3.27 U	9.62	3.27	**12.6**	2.00	0.680	**9.33** J1	18.9	6.42
Silver	NA	NA	NA	NA	NA	NA	**0.769** J1	0.980	0.163	**2.56**	0.962	0.160	**5.61**	0.943	0.157
Zinc	NA	NA	NA	NA	NA	NA	**1480**	9.62	1.59	**242**	2.00	0.330	**81,100**	189	31.1
Method SW7199															
Chromium VI	NA	NA	NA	NA	NA	NA	**386**	104	20.7	**9380**	1000	200	**118**	51.4	10.3
Method SW7471A															
Mercury	NA	NA	NA	NA	NA	NA	**0.159**	0.0995	0.0070	**0.100**	0.0975	0.0069	**0.0300** J1	0.0996	0.0070

TABLE N-4
TEST PIT SOIL ANALYTICAL RESULTS
BOEING ISAACSON-THOMPSON
REMEDIAL INVESTIGATION

	IT-PAINT-04			IT-PAINT-05			IT-PAINT-06			IT-SURFACE-01			IT-SURFACE-02		
	6612542			6612543			6612544			6607139			6607140		
	1301439			1301439			1301439			1300346			1300346		
	04/10/2012			04/10/2012			04/10/2012			04/03/2012			04/03/2012		
	Result	Reporting Limit	Detection Limit	Result	Reporting Limit	Detection Limit	Result	Reporting Limit	Detection Limit	Result	Reporting Limit	Detection Limit	Result	Reporting Limit	Detection Limit
SEMIVOLATILES (µg/kg)															
Method SW8270D															
Benzoic Acid	**35,000**	30,000	10,000	**59,000**	30,000	10,000	**35,000**	30,000	10,000	5500 U	16,000	5500	6300 U	19,000	6300
Benzyl Alcohol	2000 U	3000	2000	2000 U	3000	2000	2000 U	3000	2000	1100 U	1600	1100	1300 U	1900	1300
4-Bromophenyl-phenylether	1000 U	2000	1000	1000 U	2000	1000	1000 U	2000	1000	550 U	1100	550	630 U	1300	630
Butylbenzylphthalate	4000 U	10,000	4000	4000 U	10,000	4000	4000 U	10,000	4000	2200 U	5500	2200	2500 U	6300	2500
Di-n-Butylphthalate	4000 U	10,000	4000	4000 U	10,000	4000	4000 U	10,000	4000	**20,000**	5500	2200	2500 U	6300	2500
Carbazole	1000 U	2000	1000	1000 U	2000	1000	1000 U	2000	1000	550 U	1100	550	630 U	1300	630
4-Chloro-3-methylphenol	1000 U	2000	1000	1000 U	2000	1000	1000 U	2000	1000	550 U	1100	550	630 U	1300	630
4-Chloroaniline	1000 U	2000	1000	1000 U	2000	1000	1000 U	2000	1000	550 U	1100	550	630 U	1300	630
bis(2-Chloroethoxy) Methane	1000 U	2000	1000	1000 U	2000	1000	1000 U	2000	1000	550 U	1100	550	630 U	1300	630
Bis-(2-Chloroethyl) Ether	1000 U	2000	1000	1000 U	2000	1000	1000 U	2000	1000	550 U	1100	550	630 U	1300	630
2-Chloronaphthalene	420 U	2000	420	420 U	2000	420	420 U	2000	420	230 U	1100	230	270 U	1300	270
2-Chlorophenol	1000 U	2000	1000	1000 U	2000	1000	1000 U	2000	1000	550 U	1100	550	630 U	1300	630
4-Chlorophenyl-phenylether	1000 U	2000	1000	1000 U	2000	1000	1000 U	2000	1000	550 U	1100	550	630 U	1300	630
2,2'-Oxybis(1-Chloropropane)	1000 U	2000	1000	1000 U	2000	1000	1000 U	2000	1000	550 U	1100	550	630 U	1300	630
1,2-Dichlorobenzene	1000 U	2000	1000	1000 U	2000	1000	1000 U	2000	1000	550 U	1100	550	630 U	1300	630
1,3-Dichlorobenzene	1000 U	2000	1000	1000 U	2000	1000	1000 U	2000	1000	550 U	1100	550	630 U	1300	630
1,4-Dichlorobenzene	1000 U	2000	1000	1000 U	2000	1000	1000 U	2000	1000	550 U	1100	550	630 U	1300	630
3,3'-Dichlorobenzidine	6000 U	20,000	6000	6000 U	20,000	6000	6000 U	20,000	6000	3300 U	11,000	3300	3800 U	13,000	3800
2,4-Dichlorophenol	1000 U	2000	1000	1000 U	2000	1000	1000 U	2000	1000	550 U	1100	550	630 U	1300	630
Diethylphthalate	4000 U	10,000	4000	4000 U	10,000	4000	4000 U	10,000	4000	2200 U	5500	2200	2500 U	6300	2500
2,4-Dimethylphenol	600 U	1000	600	600 U	1000	600	600 U	1000	600	330 U	550	330	380 U	630	380
Dimethylphthalate	**33,000**	10,000	4000	4000 U	10,000	4000	4000 U	10,000	4000	2200 U	5500	2200	2500 U	6300	2500
4,6-Dinitro-2-Methylphenol	10,000 U	30,000	10,000	10,000 U	30,000	10,000	10,000 U	30,000	10,000	5500 U	16,000	5500	6300 U	19,000	6300
2,4-Dinitrophenol	18,000 U	60,000	18,000	18,000 U	60,000	18,000	18,000 U	60,000	18,000	9800 U	33,000	9800	11,000 U	38,000	11,000
2,4-Dinitrotoluene	4000 U	10,000	4000	4000 U	10,000	4000	4000 U	10,000	4000	2200 U	5500	2200	2500 U	6300	2500
2,6-Dinitrotoluene	1000 U	2000	1000	1000 U	2000	1000	1000 U	2000	1000	550 U	1100	550	630 U	1300	630
bis(2-Ethylhexyl)phthalate	**79,000**	10,000	4000	4000 U	10,000	4000	4000 U	10,000	4000	**36,000**	5600	2200	**2900** J1	6400	2500
Hexachlorobenzene	200 U	1000	200	200 U	1000	200	200 U	1000	200	110 U	560	110	130 U	640	130
Hexachlorobutadiene	600 U	1000	600	600 U	1000	600	600 U	1000	600	330 U	550	330	380 U	630	380
Hexachlorocyclopentadiene	10,000 U	30,000	10,000	10,000 U	30,000	10,000	10,000 U	30,000	10,000	5500 U	16,000	5500	6300 U	19,000	6300
Hexachloroethane	2000 U	10,000	2000	2000 U	10,000	2000	2000 U	10,000	2000	1100 U	5500	1100	1300 U	6300	1300
Isophorone	**20,000**	2000	1000	1000 U	2000	1000	1000 U	2000	1000	550 U	1100	550	630 U	1300	630
1-Methylnaphthalene	200 U	1000	200	200 U	1000	200	200 U	1000	200	110 U	560	110	130 U	640	130
2-Methylphenol	600 U	1000	600	600 U	1000	600	600 U	1000	600	330 U	550	330	380 U	630	380
4-Methylphenol	1000 U	2000	1000	1000 U	2000	1000	1000 U	2000	1000	550 U	1100	550	630 U	1300	630
2-Nitroaniline	1000 U	2000	1000	1000 U	2000	1000	1000 U	2000	1000	550 U	1100	550	630 U	1300	630
3-Nitroaniline	4000 U	10,000	4000	4000 U	10,000	4000	4000 U	10,000	4000	2200 U	5500	2200	2500 U	6300	2500
4-Nitroaniline	4000 U	10,000	4000	4000 U	10,000	4000	4000 U	10,000	4000	2200 U	5500	2200	2500 U	6300	2500
Nitrobenzene	1000 U	2000	1000	1000 U	2000	1000	1000 U	2000	1000	550 U	1100	550	630 U	1300	630
2-Nitrophenol	1000 U	2000	1000	1000 U	2000	1000	1000 U	2000	1000	550 U	1100	550	630 U	1300	630
4-Nitrophenol	10,000 U	30,000	10,000	10,000 U	30,000	10,000	10,000 U	30,000	10,000	5500 U	16,000	5500	6300 U	19,000	6300
N-Nitroso-Di-N-Propylamine	**3000**	2000	1000	1000 U	2000	1000	1000 U	2000	1000	550 U	1100	550	630 U	1300	630
N-Nitrosodiphenylamine	600 U	1000	600	600 U	1000	600	600 U	1000	600	330 U	550	330	380 U	630	380
Di-n-Octyl phthalate	4000 U	10,000	4000	4000 U	10,000	4000	4000 U	10,000	4000	2200 U	5500	2200	2500 U	6300	2500
Pentachlorophenol	2000 U	10,000	2000	2000 U	10,000	2000	2000 U	10,000	2000	1100 U	5600	1100	1300 U	6400	1300
Phenol	**2100**	2000	1000	1000 U	2000	1000	1000 U	2000	1000	550 U	1100	550	630 U	1300	630
1,2,4-Trichlorobenzene	1000 U	2000	1000	1000 U	2000	1000	1000 U	2000	1000	550 U	1100	550	630 U	1300	630
2,4,5-Trichlorophenol	1000 U	2000	1000	1000 U	2000	1000	1000 U	2000	1000	550 U	1100	550	630 U	1300	630
2,4,6-Trichlorophenol	1000 U	2000	1000	1000 U	2000	1000	1000 U	2000	1000	550 U	1100	550	630 U	1300	630

TABLE N-4
TEST PIT SOIL ANALYTICAL RESULTS
BOEING ISAACSON-THOMPSON
REMEDIAL INVESTIGATION

	IT-PAINT-04 6612542 1301439 04/10/2012			IT-PAINT-05 6612543 1301439 04/10/2012			IT-PAINT-06 6612544 1301439 04/10/2012			IT-SURFACE-01 6607139 1300346 04/03/2012			IT-SURFACE-02 6607140 1300346 04/03/2012		
	Result	Reporting Limit	Detection Limit	Result	Reporting Limit	Detection Limit	Result	Reporting Limit	Detection Limit	Result	Reporting Limit	Detection Limit	Result	Reporting Limit	Detection Limit
PAHs (µg/kg)															
Method SW8270D-SIM															
Acenaphthene	400 U	1000	400	200 U	500	200	400 U	1000	400	44 U	110	44	100 UJ	260	100
Acenaphthylene	200 U	1000	200	100 U	500	100	200 U	1000	200	**59** J1	110	22	**57** J, J1	260	51
Anthracene	200 U	1000	200	100 U	500	100	200 U	1000	200	**120**	110	22	**130** J, J1	260	51
Benzo(a)anthracene	400 U	1000	400	200 U	500	200	400 U	1000	400	**380**	110	44	**200** J, J1	260	100
Benzo(a)pyrene	400 U	1000	400	200 U	500	200	400 U	1000	400	**520**	110	44	**260** J	260	100
Benzo(b)fluoranthene	400 U	1000	400	200 U	500	200	400 U	1000	400	**1300**	110	44	**990** J	260	100
Benzo(g,h,i)perylene	400 U	1000	400	200 U	500	200	400 U	1000	400	**290**	110	44	**170** J, J1	260	100
Benzo(k)fluoranthene	400 U	1000	400	200 U	500	200	400 U	1000	400	**460**	110	44	**860** J	260	100
Chrysene	200 U	1000	200	100 U	500	100	200 U	1000	200	**1000**	110	22	**1200** J	260	51
Dibenz(a,h)anthracene	400 U	1000	400	200 U	500	200	400 U	1000	400	**76** J1	110	44	100 UJ	260	100
Dibenzofuran	400 U	1000	400	200 U	500	200	400 U	1000	400	**59** J1	110	44	**200** J, J1	260	100
Fluoranthene	400 U	1000	400	200 U	500	200	400 U	1000	400	**1500**	110	44	**2500** J	260	100
Fluorene	400 U	1000	400	200 U	500	200	400 U	1000	400	**54** J1	110	44	**130** J, J1	260	100
Indeno(1,2,3-cd)pyrene	400 U	1000	400	200 U	500	200	400 U	1000	400	**280**	110	44	**170** J, J1	260	100
2-Methylnaphthalene	400 U	1000	400	200 U	500	200	400 U	1000	400	**53** J1	110	44	**110** J, J1	260	100
Naphthalene	**610** J1	1000	400	200 U	500	200	**470** J1	1000	400	**120**	110	44	**220** J, J1	260	100
Total Naphthalenes	**610** J	NA	NA	NA	NA	NA	**470** J	NA	NA	**173** J	NA	NA	**330** J	NA	NA
Phenanthrene	**950** J1	1000	400	200 U	500	200	400 U	1000	400	**820**	110	44	**2000** J	260	100
Pyrene	400 U	1000	400	200 U	500	200	400 U	1000	400	**1000**	110	44	**1300** J	260	100
cPAH TEQ	ND	NA	NA	ND	NA	NA	ND	NA	NA	**780** J	NA	NA	**494** J	NA	NA
PCBs (µg/kg)															
Method SW8082															
Aroclor 1016	72 U	340	72	360 U	1700	360	360 U	1700	360	9.5 U	45	9.5	11 U	52	11
Aroclor 1221	92 U	340	92	460 U	1700	460	460 U	1700	460	12 U	45	12	14 U	52	14
Aroclor 1232	160 U	340	160	800 U	1700	800	800 U	1700	800	21 U	45	21	25 U	52	25
Aroclor 1242	66 U	340	66	330 U	1700	330	330 U	1700	330	8.7 U	45	8.7	10 U	52	10
Aroclor 1248	66 U	340	66	330 U	1700	330	330 U	1700	330	8.7 U	45	8.7	10 U	52	10
Aroclor 1254	**1400**	340	66	**11,000**	1700	330	**5000**	1700	330	**130** J	45	8.7	10 U	52	10
Aroclor 1260	98 U	340	98	490 U	1700	490	490 U	1700	490	**110** J	45	13	**51** J1	52	15
Total PCBs	**1400**	NA	NA	**11,000**	NA	NA	**5000**	NA	NA	**240** J	NA	NA	**51** J	NA	NA
TOTAL METALS (mg/kg)															
Methods 6010B/6020															
Antimony	**0.900**	0.196	0.0725	**0.373**	0.200	0.0740	**0.181** J1	0.196	0.0725	**6.55** J	0.261	0.0965	**8.88**	0.297	0.110
Arsenic	**0.875** J1	1.96	0.539	**4.54**	2.00	0.550	**2.86**	1.96	0.539	**9.30**	2.61	0.717	**41.7**	2.97	0.818
Barium	**250**	0.490	0.0176	**2950**	5.00	0.180	**3170**	2.45	0.0882	**143** J	0.652	0.0235	**204**	0.743	0.0268
Beryllium	**0.0186** J1	0.490	0.0137	**0.0570** J1	0.500	0.0140	**0.0853** J1	0.490	0.0137	**0.180** J1	0.652	0.0183	**0.257** J1	0.743	0.0208
Cadmium	**147**	0.490	0.0196	**4.51**	0.500	0.0200	**1.25**	0.490	0.0196	**10.9**	0.652	0.0261	**46.7**	0.743	0.0297
Chromium	**76.6**	1.47	0.137	**16.6**	1.50	0.140	**36.0**	1.47	0.137	**161**	1.96	0.183	**154**	2.23	0.208
Copper	**12.4**	0.980	0.0941	**30.9**	1.00	0.0960	**46.2**	0.980	0.0941	**156**	1.30	0.125	**128**	1.49	0.143
Lead	**1740**	7.35	1.08	**395**	1.50	0.220	**112**	1.47	0.216	**371** J	1.96	0.287	**235**	2.23	0.327
Nickel	**8.71**	0.980	0.0971	**7.47**	1.00	0.0990	**13.2**	0.980	0.0971	**87.6**	1.30	0.129	**95.8**	1.49	0.147
Selenium	**10.4**	1.96	0.667	**1.20** J1	2.00	0.680	**1.34** J1	1.96	0.667	4.44 U	13.0	4.44	1.01 U	2.97	1.01
Silver	0.160 U	0.962	0.160	**0.344** J1	0.962	0.160	**0.190** J1	1.00	0.166	**8.01** J	0.652	0.108	**1.03**	0.743	0.123
Zinc	**2110**	9.80	1.62	**8140**	40.0	6.60	**1580**	9.80	1.62	**4270**	13.0	2.15	**1830**	14.9	2.45
Method SW7199															
Chromium VI	**0.47** J1	1.0	0.21	**0.49** J1	1.0	0.21	**3.3**	1.0	0.20	0.26 U	1.3	0.26	0.31 U	1.5	0.31
Method SW7471A															
Mercury	**0.115**	0.0998	0.0070	**37.0**	9.72	0.684	**45.2**	9.78	0.688	**0.107** J1	0.124	0.0087	**0.0720** J1	0.147	0.0104

TABLE N-4
TEST PIT SOIL ANALYTICAL RESULTS
BOEING ISAACSON-THOMPSON
REMEDIAL INVESTIGATION

	IT-SURFACE-03			IT-SURFACE-04			IT-SURFACE-05			IT-SURFACE-06			IT-SURFACE-07		
	6607141			6607142			6607143			6607144			6607145		
	1300346			1300346			1300346			1300346			1300346		
	04/03/2012			04/03/2012			04/03/2012			04/03/2012			04/03/2012		
	Result	Reporting Limit	Detection Limit	Result	Reporting Limit	Detection Limit	Result	Reporting Limit	Detection Limit	Result	Reporting Limit	Detection Limit	Result	Reporting Limit	Detection Limit
SEMIVOLATILES (µg/kg)															
Method SW8270D															
Benzoic Acid	4900 UJ	15,000	4900	11,000 U	33,000	11,000	6600 U	20,000	6600	5100 U	15,000	5100	5000 U	15,000	5000
Benzyl Alcohol	980 U	1500	980	2200 U	3300	2200	1300 U	2000	1300	1000 U	1500	1000	1000 U	1500	1000
4-Bromophenyl-phenylether	490 U	980	490	1100 U	2200	1100	660 U	1300	660	510 U	1000	510	500 U	1000	500
Butylbenzylphthalate	2000 U	4900	2000	4400 U	11,000	4400	2600 U	6600	2600	2100 U	5100	2100	2000 U	5000	2000
Di-n-Butylphthalate	2000 UJ	4900	2000	4400 U	11,000	4400	2600 U	6600	2600	2100 U	5100	2100	2000 U	5000	2000
Carbazole	490 U	980	490	1100 U	2200	1100	660 U	1300	660	510 U	1000	510	500 U	1000	500
4-Chloro-3-methylphenol	490 U	980	490	1100 U	2200	1100	660 U	1300	660	510 U	1000	510	500 U	1000	500
4-Chloroaniline	490 U	980	490	1100 U	2200	1100	660 U	1300	660	510 U	1000	510	500 U	1000	500
bis(2-Chloroethoxy) Methane	490 U	980	490	1100 U	2200	1100	660 U	1300	660	510 U	1000	510	500 U	1000	500
Bis-(2-Chloroethyl) Ether	490 U	980	490	1100 U	2200	1100	660 U	1300	660	510 U	1000	510	500 U	1000	500
2-Chloronaphthalene	210 U	970	210	460 U	2200	460	280 U	1300	280	220 U	1000	220	210 U	990	210
2-Chlorophenol	490 U	980	490	1100 U	2200	1100	660 U	1300	660	510 U	1000	510	500 U	1000	500
4-Chlorophenyl-phenylether	490 U	980	490	1100 U	2200	1100	660 U	1300	660	510 U	1000	510	500 U	1000	500
2,2'-Oxybis(1-Chloropropane)	490 U	980	490	1100 U	2200	1100	660 U	1300	660	510 U	1000	510	500 U	1000	500
1,2-Dichlorobenzene	490 U	980	490	1100 U	2200	1100	660 U	1300	660	510 U	1000	510	500 U	1000	500
1,3-Dichlorobenzene	490 U	980	490	1100 U	2200	1100	660 U	1300	660	510 U	1000	510	500 U	1000	500
1,4-Dichlorobenzene	490 U	980	490	1100 U	2200	1100	660 U	1300	660	510 U	1000	510	500 U	1000	500
3,3'-Dichlorobenzidine	2900 UJ	9800	2900	6600 U	22,000	6600	4000 U	13,000	4000	3100 U	10,000	3100	3000 U	10,000	3000
2,4-Dichlorophenol	490 U	980	490	1100 U	2200	1100	660 U	1300	660	510 U	1000	510	500 U	1000	500
Diethylphthalate	2000 UJ	4900	2000	4400 U	11,000	4400	2600 U	6600	2600	2100 U	5100	2100	2000 U	5000	2000
2,4-Dimethylphenol	290 U	490	290	660 U	1100	660	400 U	660	400	310 U	510	310	300 U	500	300
Dimethylphthalate	2000 UJ	4900	2000	4400 U	11,000	4400	2600 U	6600	2600	2100 U	5100	2100	2000 U	5000	2000
4,6-Dinitro-2-Methylphenol	4900 UJ	15,000	4900	11,000 U	33,000	11,000	6600 U	20,000	6600	5100 U	15,000	5100	5000 U	15,000	5000
2,4-Dinitrophenol	8800 UJ	29,000	8800	20,000 U	66,000	20,000	12,000 U	40,000	12,000	9200 U	31,000	9200	9000 U	30,000	9000
2,4-Dinitrotoluene	2000 UJ	4900	2000	4400 U	11,000	4400	2600 U	6600	2600	2100 U	5100	2100	2000 U	5000	2000
2,6-Dinitrotoluene	490 U	980	490	1100 U	2200	1100	660 U	1300	660	510 U	1000	510	500 U	1000	500
bis(2-Ethylhexyl)phthalate	**5800**	5000	2000	**9000** J1	11,000	4400	2600 U	6700	2600	2100 U	5200	2100	2000 U	5100	2000
Hexachlorobenzene	98 U	500	98	220 U	1100	220	130 U	670	130	100 U	520	100	100 U	510	100
Hexachlorobutadiene	290 U	490	290	660 U	1100	660	400 U	660	400	310 U	510	310	300 U	500	300
Hexachlorocyclopentadiene	4900 UJ	15,000	4900	11,000 U	33,000	11,000	6600 U	20,000	6600	5100 U	15,000	5100	5000 U	15,000	5000
Hexachloroethane	980 U	4900	980	2200 U	11,000	2200	1300 U	6600	1300	1000 U	5100	1000	1000 U	5000	1000
Isophorone	490 U	980	490	1100 U	2200	1100	660 U	1300	660	510 U	1000	510	500 U	1000	500
1-Methylnaphthalene	98 U	500	98	220 U	1100	220	130 U	670	130	100 U	520	100	100 U	510	100
2-Methylphenol	290 U	490	290	660 U	1100	660	400 U	660	400	310 U	510	310	300 U	500	300
4-Methylphenol	490 U	980	490	1100 U	2200	1100	660 U	1300	660	510 U	1000	510	500 U	1000	500
2-Nitroaniline	490 U	980	490	1100 U	2200	1100	660 U	1300	660	510 U	1000	510	500 U	1000	500
3-Nitroaniline	2000 UJ	4900	2000	4400 U	11,000	4400	2600 U	6600	2600	2100 U	5100	2100	2000 U	5000	2000
4-Nitroaniline	2000 UJ	4900	2000	4400 U	11,000	4400	2600 U	6600	2600	2100 U	5100	2100	2000 U	5000	2000
Nitrobenzene	490 U	980	490	1100 U	2200	1100	660 U	1300	660	510 U	1000	510	500 U	1000	500
2-Nitrophenol	490 U	980	490	1100 U	2200	1100	660 U	1300	660	510 U	1000	510	500 U	1000	500
4-Nitrophenol	4900 UJ	15,000	4900	11,000 U	33,000	11,000	6600 U	20,000	6600	5100 U	15,000	5100	5000 U	15,000	5000
N-Nitroso-Di-N-Propylamine	490 U	980	490	1100 U	2200	1100	660 U	1300	660	510 U	1000	510	500 U	1000	500
N-Nitrosodiphenylamine	290 U	490	290	660 U	1100	660	400 U	660	400	310 U	510	310	300 U	500	300
Di-n-Octyl phthalate	2000 UJ	4900	2000	4400 U	11,000	4400	2600 U	6600	2600	2100 U	5100	2100	2000 U	5000	2000
Pentachlorophenol	980 U	5000	980	**15,000**	11,000	2200	1300 U	6700	1300	1000 U	5200	1000	1000 U	5100	1000
Phenol	490 U	980	490	1100 U	2200	1100	660 U	1300	660	510 U	1000	510	500 U	1000	500
1,2,4-Trichlorobenzene	490 U	980	490	1100 U	2200	1100	660 U	1300	660	510 U	1000	510	500 U	1000	500
2,4,5-Trichlorophenol	490 U	980	490	1100 U	2200	1100	660 U	1300	660	510 U	1000	510	500 U	1000	500
2,4,6-Trichlorophenol	490 U	980	490	1100 U	2200	1100	660 U	1300	660	510 U	1000	510	500 U	1000	500

TABLE N-4
TEST PIT SOIL ANALYTICAL RESULTS
BOEING ISAACSON-THOMPSON
REMEDIAL INVESTIGATION

	IT-SURFACE-03			IT-SURFACE-04			IT-SURFACE-05			IT-SURFACE-06			IT-SURFACE-07		
	6607141			6607142			6607143			6607144			6607145		
	1300346			1300346			1300346			1300346			1300346		
	04/03/2012			04/03/2012			04/03/2012			04/03/2012			04/03/2012		
	Result	Reporting Limit	Detection Limit	Result	Reporting Limit	Detection Limit	Result	Reporting Limit	Detection Limit	Result	Reporting Limit	Detection Limit	Result	Reporting Limit	Detection Limit
PAHs (µg/kg)															
Method SW8270D-SIM															
Acenaphthene	**71** J1	99	39	88 U	220	88	**58** J1	130	53	41 U	100	41	16 U	40	16
Acenaphthylene	**71** J1	99	20	44 U	220	44	27 U	130	27	20 U	100	20	8.0 U	40	8.0
Anthracene	**160**	99	20	**130** J1	220	44	**120** J1	130	27	**24** J1	100	20	**9.7** J1	40	8.0
Benzo(a)anthracene	**520**	99	39	**290**	220	88	**430**	130	53	**100** J1	100	41	**36** J1	40	16
Benzo(a)pyrene	**740**	99	39	**400**	220	88	**570**	130	53	**140**	100	41	**53**	40	16
Benzo(b)fluoranthene	**1800**	99	39	**1000**	220	88	**1300**	130	53	**250**	100	41	**140**	40	16
Benzo(g,h,i)perylene	**370**	99	39	**210** J1	220	88	**270**	130	53	**110**	100	41	**35** J1	40	16
Benzo(k)fluoranthene	**650**	99	39	**330**	220	88	**440**	130	53	**81** J1	100	41	**43**	40	16
Chrysene	**1500**	99	20	**980**	220	44	**910**	130	27	**240**	100	20	**110**	40	8.0
Dibenz(a,h)anthracene	**99** J1	99	39	88 U	220	88	**70** J1	130	53	41 U	100	41	16 U	40	16
Dibenzofuran	**100**	99	39	88 U	220	88	**93** J1	130	53	41 U	100	41	16 U	40	16
Fluoranthene	**2400**	99	39	**1300**	220	88	**1600**	130	53	**260**	100	41	**130**	40	16
Fluorene	**96** J1	99	39	**89** J1	220	88	**84** J1	130	53	41 U	100	41	16 U	40	16
Indeno(1,2,3-cd)pyrene	**380**	99	39	**180** J1	220	88	**260**	130	53	**85** J1	100	41	**25** J1	40	16
2-Methylnaphthalene	**58** J1	99	39	**89** J1	220	88	**79** J1	130	53	41 U	100	41	**21** J1	40	16
Naphthalene	**140**	99	39	**180** J1	220	88	**170**	130	53	**72** J1	100	41	**34** J1	40	16
Total Naphthalenes	**198** J	NA	NA	**269** J	NA	NA	**249** J	NA	NA	**72** J	NA	NA	**55** J	NA	NA
Phenanthrene	**1300**	99	39	**1000**	220	88	**950**	130	53	**150**	100	41	**80**	40	16
Pyrene	**1500**	99	39	**1000**	220	88	**1100**	130	53	**230**	100	41	**95**	40	16
cPAH TEQ	**1100**	NA	NA	**590** J	NA	NA	**829** J	NA	NA	**194** J	NA	NA	**79** J	NA	NA
PCBs (µg/kg)															
Method SW8082															
Aroclor 1016	8.5 U	40	8.5	95 U	450	95	57 U	270	57	8.8 U	42	8.8	8.6 U	41	8.6
Aroclor 1221	11 U	40	11	120 U	450	120	73 U	270	73	11 U	42	11	11 U	41	11
Aroclor 1232	19 U	40	19	210 U	450	210	130 U	270	130	20 U	42	20	19 U	41	19
Aroclor 1242	7.8 U	40	7.8	87 U	450	87	52 U	270	52	8.1 U	42	8.1	7.9 U	41	7.9
Aroclor 1248	7.8 U	40	7.8	87 U	450	87	52 U	270	52	8.1 U	42	8.1	7.9 U	41	7.9
Aroclor 1254	7.8 U	40	7.8	**920**	450	87	**570**	270	52	**38** J, J1	42	8.1	**130**	41	7.9
Aroclor 1260	**130** J	40	12	130 U	450	130	78 U	270	78	**73** J	42	12	**82**	41	12
Total PCBs	**130** J	NA	NA	**920**	NA	NA	**570**	NA	NA	**111** J	NA	NA	**212**	NA	NA
TOTAL METALS (mg/kg)															
Methods 6010B/6020															
Antimony	**2.77**	0.234	0.0867	**2.12**	0.515	0.191	**2.73**	0.309	0.114	**0.798**	0.246	0.0910	0.376 U	0.235	0.0868
Arsenic	**14.9**	2.34	0.644	**31.4**	5.15	1.42	**17.4**	3.09	0.849	**16.8**	2.46	0.677	**7.12**	2.35	0.645
Barium	**144**	0.586	0.0211	**222**	1.29	0.0464	**164**	0.772	0.0278	**84.9**	0.615	0.0221	**86.5**	0.586	0.0211
Beryllium	**0.308** J1	0.586	0.0164	**0.265** J1	1.29	0.0361	**0.242** J1	0.772	0.0216	**0.241** J1	0.615	0.0172	**0.337** J1	0.586	0.0164
Cadmium	**13.0**	0.586	0.0234	**4.37**	1.29	0.0515	**1.11**	0.772	0.0309	**1.08**	0.615	0.0246	**0.639**	0.586	0.0235
Chromium	**199**	1.76	0.164	**172**	3.86	0.361	**338**	2.32	0.216	**204**	1.85	0.172	**52.3**	1.76	0.164
Copper	**197**	1.17	0.112	**189**	2.58	0.247	**132**	1.54	0.148	**100**	1.23	0.118	**48.7**	1.17	0.113
Lead	**288**	1.76	0.258	**236**	3.86	0.567	**263**	2.32	0.340	**72.5**	1.85	0.271	**12.8**	1.76	0.258
Nickel	**97.7**	1.17	0.116	**82.4**	2.58	0.255	**180**	1.54	0.153	**129**	1.23	0.122	**38.8**	1.17	0.116
Selenium	3.98 U	11.7	3.98	1.75 U	5.15	1.75	1.05 U	3.09	1.05	4.18 U	12.3	4.18	0.797 U	2.35	0.797
Silver	**1.27**	0.586	0.0973	**0.888** J1	1.29	0.214	**0.681** J1	0.772	0.128	**0.691**	0.615	0.102	**0.437** J1	0.586	0.0973
Zinc	**2030**	11.7	1.93	**1330**	5.15	0.850	**544**	3.09	0.509	**568**	2.46	0.406	**170**	2.35	0.387
Method SW7199															
Chromium VI	0.25 U	1.2	0.25	0.52 U	2.6	0.52	**4.2**	1.6	0.31	**0.47** J1	1.2	0.25	**1.5**	1.2	0.24
Method SW7471A															
Mercury	**0.137**	0.114	0.0080	**0.546**	0.250	0.0176	**0.0586** J1	0.154	0.0108	**0.0174** J1	0.123	0.0086	**0.0677** J1	0.112	0.0079

TABLE N-4
TEST PIT SOIL ANALYTICAL RESULTS
BOEING ISAACSON-THOMPSON
REMEDIAL INVESTIGATION

	IT-SURFACE-08			IT-SURFACE-09			IT-SURFACE-10			IT-SURFACE-11			IT-SURFACE-12		
	6607146			6607147			6607148			6607149			6607150		
	1300346			1300346			1300346			1300346			1300346		
	04/03/2012			04/03/2012			04/03/2012			04/03/2012			04/03/2012		
	Result	Reporting Limit	Detection Limit	Result	Reporting Limit	Detection Limit	Result	Reporting Limit	Detection Limit	Result	Reporting Limit	Detection Limit	Result	Reporting Limit	Detection Limit
SEMIVOLATILES (µg/kg)															
Method SW8270D															
Benzoic Acid	6600 U	20,000	6600	1400 U	4200	1400	2400 U	7300	2400	11,000 U	34,000	11,000	7500 U	22,000	7500
Benzyl Alcohol	1300 U	2000	1300	280 U	420	280	490 U	730	490	2300 U	3400	2300	1500 U	2200	1500
4-Bromophenyl-phenylether	660 U	1300	660	140 U	280	140	240 U	490	240	1100 U	2300	1100	750 U	1500	750
Butylbenzylphthalate	2700 U	6600	2700	560 U	1400	560	980 U	2400	980	4600 U	11,000	4600	3000 U	7500	3000
Di-n-Butylphthalate	2700 U	6600	2700	560 U	1400	560	980 U	2400	980	4600 U	11,000	4600	3000 U	7500	3000
Carbazole	660 U	1300	660	140 U	280	140	240 U	490	240	1100 U	2300	1100	750 U	1500	750
4-Chloro-3-methylphenol	660 U	1300	660	140 U	280	140	240 U	490	240	1100 U	2300	1100	750 U	1500	750
4-Chloroaniline	660 U	1300	660	140 U	280	140	240 U	490	240	1100 U	2300	1100	750 U	1500	750
bis(2-Chloroethoxy) Methane	660 U	1300	660	140 U	280	140	240 U	490	240	1100 U	2300	1100	750 U	1500	750
Bis-(2-Chloroethyl) Ether	660 U	1300	660	140 U	280	140	240 U	490	240	1100 U	2300	1100	750 U	1500	750
2-Chloronaphthalene	280 U	1300	280	59 U	280	59	100 U	480	100	480 U	2300	480	310 U	1500	310
2-Chlorophenol	660 U	1300	660	140 U	280	140	240 U	490	240	1100 U	2300	1100	750 U	1500	750
4-Chlorophenyl-phenylether	660 U	1300	660	140 U	280	140	240 U	490	240	1100 U	2300	1100	750 U	1500	750
2,2'-Oxybis(1-Chloropropane)	660 U	1300	660	140 U	280	140	240 U	490	240	1100 U	2300	1100	750 U	1500	750
1,2-Dichlorobenzene	660 U	1300	660	140 U	280	140	240 U	490	240	1100 U	2300	1100	750 U	1500	750
1,3-Dichlorobenzene	660 U	1300	660	140 U	280	140	240 U	490	240	1100 U	2300	1100	750 U	1500	750
1,4-Dichlorobenzene	660 U	1300	660	140 U	280	140	240 U	490	240	1100 U	2300	1100	750 U	1500	750
3,3'-Dichlorobenzidine	4000 U	13,000	4000	840 U	2800	840	1500 U	4900	1500	6800 U	23,000	6800	4500 U	15,000	4500
2,4-Dichlorophenol	660 U	1300	660	140 U	280	140	240 U	490	240	1100 U	2300	1100	750 U	1500	750
Diethylphthalate	2700 U	6600	2700	560 U	1400	560	980 U	2400	980	4600 U	11,000	4600	3000 U	7500	3000
2,4-Dimethylphenol	400 U	660	400	84 U	140	84	150 U	240	150	680 U	1100	680	450 U	750	450
Dimethylphthalate	2700 U	6600	2700	560 U	1400	560	980 U	2400	980	4600 U	11,000	4600	3000 U	7500	3000
4,6-Dinitro-2-Methylphenol	6600 U	20,000	6600	1400 U	4200	1400	2400 U	7300	2400	11,000 U	34,000	11,000	7500 U	22,000	7500
2,4-Dinitrophenol	12,000 U	40,000	12,000	2500 U	8400	2500	4400 U	15,000	4400	20,000 U	68,000	20,000	13,000 U	45,000	13,000
2,4-Dinitrotoluene	2700 U	6600	2700	560 U	1400	560	980 U	2400	980	4600 U	11,000	4600	3000 U	7500	3000
2,6-Dinitrotoluene	660 U	1300	660	140 U	280	140	240 U	490	240	1100 U	2300	1100	750 U	1500	750
bis(2-Ethylhexyl)phthalate	**6600** J1	6800	2700	**580** J1	1400	560	**2900**	2500	980	4600 U	12,000	4600	3000 U	7600	3000
Hexachlorobenzene	130 U	680	130	28 U	140	28	49 U	250	49	230 U	1200	230	150 U	760	150
Hexachlorobutadiene	400 U	660	400	84 U	140	84	150 U	240	150	680 U	1100	680	450 U	750	450
Hexachlorocyclopentadiene	6600 U	20,000	6600	1400 U	4200	1400	2400 U	7300	2400	11,000 U	34,000	11,000	7500 U	22,000	7500
Hexachloroethane	1300 U	6600	1300	280 U	1400	280	490 U	2400	490	2300 U	11,000	2300	1500 U	7500	1500
Isophorone	660 U	1300	660	140 U	280	140	240 U	490	240	1100 U	2300	1100	750 U	1500	750
1-Methylnaphthalene	130 U	680	130	28 U	140	28	49 U	250	49	230 U	1200	230	150 U	760	150
2-Methylphenol	400 U	660	400	84 U	140	84	150 U	240	150	680 U	1100	680	450 U	750	450
4-Methylphenol	660 U	1300	660	140 U	280	140	240 U	490	240	1100 U	2300	1100	750 U	1500	750
2-Nitroaniline	660 U	1300	660	140 U	280	140	240 U	490	240	1100 U	2300	1100	750 U	1500	750
3-Nitroaniline	2700 U	6600	2700	560 U	1400	560	980 U	2400	980	4600 U	11,000	4600	3000 U	7500	3000
4-Nitroaniline	2700 U	6600	2700	560 U	1400	560	980 U	2400	980	4600 U	11,000	4600	3000 U	7500	3000
Nitrobenzene	660 U	1300	660	140 U	280	140	240 U	490	240	1100 U	2300	1100	750 U	1500	750
2-Nitrophenol	660 U	1300	660	140 U	280	140	240 U	490	240	1100 U	2300	1100	750 U	1500	750
4-Nitrophenol	6600 U	20,000	6600	1400 U	4200	1400	2400 U	7300	2400	11,000 U	34,000	11,000	7500 U	22,000	7500
N-Nitroso-Di-N-Propylamine	660 U	1300	660	140 U	280	140	240 U	490	240	1100 U	2300	1100	750 U	1500	750
N-Nitrosodiphenylamine	400 U	660	400	84 U	140	84	150 U	240	150	680 U	1100	680	450 U	750	450
Di-n-Octyl phthalate	2700 U	6600	2700	560 U	1400	560	980 U	2400	980	4600 U	11,000	4600	3000 U	7500	3000
Pentachlorophenol	1300 U	6800	1300	280 U	1400	280	490 U	2500	490	2300 U	12,000	2300	1500 U	7600	1500
Phenol	660 U	1300	660	140 U	280	140	**1300**	490	240	1100 U	2300	1100	750 U	1500	750
1,2,4-Trichlorobenzene	660 U	1300	660	140 U	280	140	240 U	490	240	1100 U	2300	1100	750 U	1500	750
2,4,5-Trichlorophenol	660 U	1300	660	140 U	280	140	240 U	490	240	1100 U	2300	1100	750 U	1500	750
2,4,6-Trichlorophenol	660 U	1300	660	140 U	280	140	240 U	490	240	1100 U	2300	1100	750 U	1500	750

TABLE N-4
TEST PIT SOIL ANALYTICAL RESULTS
BOEING ISAACSON-THOMPSON
REMEDIAL INVESTIGATION

	IT-SURFACE-08			IT-SURFACE-09			IT-SURFACE-10			IT-SURFACE-11			IT-SURFACE-12		
	6607146			6607147			6607148			6607149			6607150		
	1300346			1300346			1300346			1300346			1300346		
	04/03/2012			04/03/2012			04/03/2012			04/03/2012			04/03/2012		
	Result	Reporting Limit	Detection Limit	Result	Reporting Limit	Detection Limit	Result	Reporting Limit	Detection Limit	Result	Reporting Limit	Detection Limit	Result	Reporting Limit	Detection Limit
PAHs (µg/kg)															
Method SW8270D-SIM															
Acenaphthene	21 U	53	21	**23** J1	56	22	**49** J1	96	38	37 U	91	37	24 U	60	24
Acenaphthylene	11 U	53	11	**15** J1	56	11	**25** J1	96	19	18 U	91	18	12 U	60	12
Anthracene	**19** J1	53	11	**26** J1	56	11	**77** J1	96	19	**72** J1	91	18	**20** J1	60	12
Benzo(a)anthracene	**73**	53	21	**86**	56	22	**150**	96	38	**270**	91	37	**68**	60	24
Benzo(a)pyrene	**110**	53	21	**130**	56	22	**190**	96	38	**300**	91	37	**110**	60	24
Benzo(b)fluoranthene	**270**	53	21	**360**	56	22	**440**	96	38	**610**	91	37	**270**	60	24
Benzo(g,h,i)perylene	**46** J1	53	21	**66**	56	22	**78** J1	96	38	**160**	91	37	**65**	60	24
Benzo(k)fluoranthene	**120**	53	21	**120**	56	22	**170**	96	38	**260**	91	37	**110**	60	24
Chrysene	**220**	53	11	**250**	56	11	**310**	96	19	**470**	91	18	**240**	60	12
Dibenz(a,h)anthracene	21 U	53	21	22 U	56	22	38 U	96	38	**39** J1	91	37	24 U	60	24
Dibenzofuran	**30** J1	53	21	**53** J1	56	22	**84** J1	96	38	**46** J1	91	37	**26** J1	60	24
Fluoranthene	**290**	53	21	**420**	56	22	**600**	96	38	**920**	91	37	**340**	60	24
Fluorene	21 U	53	21	22 U	56	22	**85** J1	96	38	**42** J1	91	37	24 U	60	24
Indeno(1,2,3-cd)pyrene	**37** J1	53	21	**63**	56	22	**72** J1	96	38	**130**	91	37	**54** J1	60	24
2-Methylnaphthalene	**37** J1	53	21	**61**	56	22	**90** J1	96	38	**41** J1	91	37	**31** J1	60	24
Naphthalene	**79**	53	21	**130**	56	22	**170**	96	38	**100**	91	37	**63**	60	24
Total Naphthalenes	**116** J	NA	NA	**191**	NA	NA	**260** J	NA	NA	**141** J	NA	NA	**94** J	NA	NA
Phenanthrene	**200**	53	21	**300**	56	22	**530**	96	38	**550**	91	37	**200**	60	24
Pyrene	**210**	53	21	**320**	56	22	**410**	96	38	**620**	91	37	**230**	60	24
cPAH TEQ	**162** J	NA	NA	**195**	NA	NA	**276** J	NA	NA	**436** J	NA	NA	**163** J	NA	NA
PCBs (µg/kg)															
Method SW8082															
Aroclor 1016	11 U	54	11	12 U	57	12	21 U	98	21	19 U	92	19	13 U	61	13
Aroclor 1221	15 U	54	15	15 U	57	15	27 U	98	27	25 U	92	25	17 U	61	17
Aroclor 1232	25 U	54	25	27 U	57	27	46 U	98	46	43 U	92	43	29 U	61	29
Aroclor 1242	10 U	54	10	11 U	57	11	19 U	98	19	18 U	92	18	12 U	61	12
Aroclor 1248	10 U	54	10	11 U	57	11	19 U	98	19	18 U	92	18	12 U	61	12
Aroclor 1254	**160**	54	10	**42** J, J1	57	11	**540** J	98	19	**88** J, J1	92	18	**34** J, J1	61	12
Aroclor 1260	**100**	54	15	**60** J	57	16	28 U	98	28	**53** J, J1	92	26	**32** J, J1	61	18
Total PCBs	**260**	NA	NA	**102** J	NA	NA	**540** J	NA	NA	**141** J	NA	NA	**66** J	NA	NA
TOTAL METALS (mg/kg)															
Methods 6010B/6020															
Antimony	**1.15**	0.315	0.116	**3.18**	0.328	0.121	**5.96**	0.575	0.213	**1.33**	0.548	0.203	**1.76**	0.352	0.130
Arsenic	**6.92**	3.15	0.866	**5.83** J1	16.4	4.51	**33.2**	5.75	1.58	**8.79**	5.48	1.51	**40.4**	3.52	0.967
Barium	**84.8**	0.787	0.0283	**102**	0.820	0.0295	**184**	1.44	0.0518	**112**	1.37	0.0493	**183**	0.879	0.0317
Beryllium	**0.217** J1	0.787	0.0220	**0.179** J1	0.820	0.0230	**0.322** J1	1.44	0.0403	**0.145** J1	1.37	0.0384	**0.290** J1	0.879	0.0246
Cadmium	**2.33**	0.787	0.0315	**6.81**	0.820	0.0328	**21.1**	1.44	0.0575	**2.28**	1.37	0.0548	**7.61**	0.879	0.0352
Chromium	**1570**	2.36	0.220	**11,100**	12.3	1.15	**647**	4.31	0.403	**243**	4.11	0.384	**395**	2.64	0.246
Copper	**306**	1.57	0.151	**598**	1.64	0.157	**368**	2.88	0.276	**83.5**	2.74	0.263	**130**	1.76	0.169
Lead	**140**	2.36	0.346	**317**	2.46	0.361	**900**	4.31	0.633	**90.7**	4.11	0.603	**101**	2.64	0.387
Nickel	**856**	1.57	0.156	**1720**	8.20	0.812	**242**	2.88	0.285	**93.4**	2.74	0.271	**124**	1.76	0.174
Selenium	5.35 U	15.7	5.35	5.58 U	16.4	5.58	9.78 U	28.8	9.78	1.86 U	5.48	1.86	1.20 U	3.52	1.20
Silver	**1.52**	0.787	0.131	**4.67**	0.820	0.136	**3.34**	1.44	0.239	**0.655** J1	1.37	0.227	**1.06**	0.879	0.146
Zinc	**971**	3.15	0.519	**2670**	16.4	2.71	**3260**	28.8	4.74	**1690**	5.48	0.904	**564**	3.52	0.580
Method SW7199															
Chromium VI	0.31 U	1.5	0.31	**0.88** J1	1.6	0.33	0.61 U	3.0	0.61	0.57 U	2.8	0.57	**2.5**	1.8	0.35
Method SW7471A															
Mercury	**0.0273** J1	0.154	0.0109	**0.0463** J1	0.158	0.0111	**0.169** J1	0.275	0.0194	**0.0898** J1	0.257	0.0180	**0.104** J1	0.180	0.0126

TABLE N-4
TEST PIT SOIL ANALYTICAL RESULTS
BOEING ISAACSON-THOMPSON
REMEDIAL INVESTIGATION

	IT-SURFACE-13			IT-SURFACE-14			IT-SURFACE-15			IT-SURFACE-16					
	6607154			6607155			6607156			6612545					
	1300346			1300346			1300346			1301439					
	04/04/2012			04/04/2012			04/04/2012			04/10/2012					
	Result	Reporting Limit	Detection Limit	Result	Reporting Limit	Detection Limit	Result	Reporting Limit	Detection Limit	Result	Reporting Limit	Detection Limit	Result	Reporting Limit	Detection Limit
SEMIVOLATILES (µg/kg)															
Method SW8270D															
Benzoic Acid	6800 U	20,000	6800	5500 U	17,000	5500	11,000 U	34,000	11,000	**18,000** J1	25,000	8200			
Benzyl Alcohol	1400 U	2000	1400	1100 U	1700	1100	2300 U	3400	2300	1600 U	2500	1600			
4-Bromophenyl-phenylether	680 U	1400	680	550 U	1100	550	1100 U	2300	1100	820 U	1600	820			
Butylbenzylphthalate	2700 U	6800	2700	2200 U	5500	2200	4500 U	11,000	4500	3300 U	8200	3300			
Di-n-Butylphthalate	2700 U	6800	2700	2200 U	5500	2200	**4800** J1	11,000	4500	3300 U	8200	3300			
Carbazole	680 U	1400	680	550 U	1100	550	1100 U	2300	1100	820 U	1600	820			
4-Chloro-3-methylphenol	680 U	1400	680	550 U	1100	550	1100 U	2300	1100	820 U	1600	820			
4-Chloroaniline	680 U	1400	680	550 U	1100	550	1100 U	2300	1100	820 U	1600	820			
bis(2-Chloroethoxy) Methane	680 U	1400	680	550 U	1100	550	1100 U	2300	1100	820 U	1600	820			
Bis-(2-Chloroethyl) Ether	680 U	1400	680	550 U	1100	550	1100 U	2300	1100	820 U	1600	820			
2-Chloronaphthalene	290 U	1300	290	230 U	1100	230	470 U	2200	470	350 U	1600	350			
2-Chlorophenol	680 U	1400	680	550 U	1100	550	1100 U	2300	1100	820 U	1600	820			
4-Chlorophenyl-phenylether	680 U	1400	680	550 U	1100	550	1100 U	2300	1100	820 U	1600	820			
2,2'-Oxybis(1-Chloropropane)	680 U	1400	680	550 U	1100	550	1100 U	2300	1100	820 U	1600	820			
1,2-Dichlorobenzene	680 U	1400	680	550 U	1100	550	1100 U	2300	1100	820 U	1600	820			
1,3-Dichlorobenzene	680 U	1400	680	550 U	1100	550	1100 U	2300	1100	820 U	1600	820			
1,4-Dichlorobenzene	680 U	1400	680	550 U	1100	550	1100 U	2300	1100	820 U	1600	820			
3,3'-Dichlorobenzidine	4100 U	14,000	4100	3300 U	11,000	3300	6800 U	23,000	6800	4900 U	16,000	4900			
2,4-Dichlorophenol	680 U	1400	680	550 U	1100	550	1100 U	2300	1100	820 U	1600	820			
Diethylphthalate	2700 U	6800	2700	2200 U	5500	2200	4500 U	11,000	4500	3300 U	8200	3300			
2,4-Dimethylphenol	410 U	680	410	330 U	550	330	680 U	1100	680	490 U	820	490			
Dimethylphthalate	2700 U	6800	2700	2200 U	5500	2200	4500 U	11,000	4500	3300 U	8200	3300			
4,6-Dinitro-2-Methylphenol	6800 U	20,000	6800	5500 U	17,000	5500	11,000 U	34,000	11,000	8200 U	25,000	8200			
2,4-Dinitrophenol	12,000 U	41,000	12,000	9900 U	33,000	9900	20,000 U	68,000	20,000	15,000 U	49,000	15,000			
2,4-Dinitrotoluene	2700 U	6800	2700	2200 U	5500	2200	4500 U	11,000	4500	3300 U	8200	3300			
2,6-Dinitrotoluene	680 U	1400	680	550 U	1100	550	1100 U	2300	1100	820 U	1600	820			
bis(2-Ethylhexyl)phthalate	**9100**	6900	2700	**3900** J1	5600	2200	**5400** J1	12,000	4500	3300 U	8400	3300			
Hexachlorobenzene	140 U	690	140	110 U	560	110	230 U	1200	230	160 U	840	160			
Hexachlorobutadiene	410 U	680	410	330 U	550	330	680 U	1100	680	490 U	820	490			
Hexachlorocyclopentadiene	6800 U	20,000	6800	5500 U	17,000	5500	11,000 U	34,000	11,000	8200 U	25,000	8200			
Hexachloroethane	1400 U	6800	1400	1100 U	5500	1100	2300 U	11,000	2300	1600 U	8200	1600			
Isophorone	680 U	1400	680	550 U	1100	550	1100 U	2300	1100	820 U	1600	820			
1-Methylnaphthalene	140 U	690	140	110 U	560	110	230 U	1200	230	160 U	840	160			
2-Methylphenol	410 U	680	410	330 U	550	330	680 U	1100	680	490 U	820	490			
4-Methylphenol	680 U	1400	680	550 U	1100	550	1100 U	2300	1100	820 U	1600	820			
2-Nitroaniline	680 U	1400	680	550 U	1100	550	1100 U	2300	1100	820 U	1600	820			
3-Nitroaniline	2700 U	6800	2700	2200 U	5500	2200	4500 U	11,000	4500	3300 U	8200	3300			
4-Nitroaniline	2700 U	6800	2700	2200 U	5500	2200	4500 U	11,000	4500	3300 U	8200	3300			
Nitrobenzene	680 U	1400	680	550 U	1100	550	1100 U	2300	1100	820 U	1600	820			
2-Nitrophenol	680 U	1400	680	550 U	1100	550	1100 U	2300	1100	820 U	1600	820			
4-Nitrophenol	6800 U	20,000	6800	5500 U	17,000	5500	11,000 U	34,000	11,000	8200 U	25,000	8200			
N-Nitroso-Di-N-Propylamine	680 U	1400	680	550 U	1100	550	1100 U	2300	1100	820 U	1600	820			
N-Nitrosodiphenylamine	410 U	680	410	330 U	550	330	680 U	1100	680	490 U	820	490			
Di-n-Octyl phthalate	2700 U	6800	2700	2200 U	5500	2200	4500 U	11,000	4500	**16,000**	8200	3300			
Pentachlorophenol	1400 U	6900	1400	1100 U	5600	1100	2300 U	12,000	2300	1600 U	8400	1600			
Phenol	680 U	1400	680	550 U	1100	550	1100 U	2300	1100	820 U	1600	820			
1,2,4-Trichlorobenzene	680 U	1400	680	550 U	1100	550	1100 U	2300	1100	820 U	1600	820			
2,4,5-Trichlorophenol	680 U	1400	680	550 U	1100	550	1100 U	2300	1100	820 U	1600	820			
2,4,6-Trichlorophenol	680 U	1400	680	550 U	1100	550	1100 U	2300	1100	820 U	1600	820			

TABLE N-4
TEST PIT SOIL ANALYTICAL RESULTS
BOEING ISAACSON-THOMPSON
REMEDIAL INVESTIGATION

	IT-SURFACE-13 6607154 1300346 04/04/2012			IT-SURFACE-14 6607155 1300346 04/04/2012			IT-SURFACE-15 6607156 1300346 04/04/2012			IT-SURFACE-16 6612545 1301439 04/10/2012					
	Result	Reporting Limit	Detection Limit	Result	Reporting Limit	Detection Limit	Result	Reporting Limit	Detection Limit	Result	Reporting Limit	Detection Limit	Result	Reporting Limit	Detection Limit
PAHs (µg/kg)															
Method SW8270D-SIM															
Acenaphthene	**240**	140	55	**78** J1	110	44	**110** J1	220	90	34 U	84	34			
Acenaphthylene	**65** J1	140	27	**23** J1	110	22	45 U	220	45	17 U	84	17			
Anthracene	**350**	140	27	**130**	110	22	**190** J1	220	45	**24** J1	84	17			
Benzo(a)anthracene	**750**	140	55	**530**	110	44	**580**	220	90	**78** J1	84	34			
Benzo(a)pyrene	**780**	140	55	**550**	110	44	**620**	220	90	**190**	84	34			
Benzo(b)fluoranthene	**1600**	140	55	**1100**	110	44	**1300**	220	90	**430**	84	34			
Benzo(g,h,i)perylene	**260**	140	55	**340**	110	44	**330**	220	90	**69** J1	84	34			
Benzo(k)fluoranthene	**650**	140	55	**350**	110	44	**440**	220	90	34 U	84	34			
Chrysene	**1100**	140	27	**900**	110	22	**1000**	220	45	**340**	84	17			
Dibenz(a,h)anthracene	**77** J1	140	55	**86** J1	110	44	**90** J1	220	90	34 U	84	34			
Dibenzofuran	**170**	140	55	**62** J1	110	44	**90** J1	220	90	34 U	84	34			
Fluoranthene	**2700**	140	55	**1700**	110	44	**1800**	220	90	**210**	84	34			
Fluorene	**270**	140	55	**77** J1	110	44	**120** J1	220	90	34 U	84	34			
Indeno(1,2,3-cd)pyrene	**250**	140	55	**270**	110	44	**250**	220	90	**41** J1	84	34			
2-Methylnaphthalene	**110** J1	140	55	44 U	110	44	90 U	220	90	34 U	84	34			
Naphthalene	**190**	140	55	**100** J1	110	44	**190** J1	220	90	**48** J1	84	34			
Total Naphthalenes	**300** J	NA	NA	**100** J	NA	NA	**190** J	NA	NA	**48** J	NA	NA			
Phenanthrene	**2100**	140	55	**1000**	110	44	**1200**	220	90	**170**	84	34			
Pyrene	**2000**	140	55	**1100**	110	44	**1200**	220	90	**180**	84	34			
cPAH TEQ	**1124** J	NA	NA	**793** J	NA	NA	**896** J	NA	NA	**248** J	NA	NA			
PCBs (µg/kg)															
Method SW8082															
Aroclor 1016	12 U	56	12	9.5 U	45	9.5	9.6 U	46	9.6	72 U	340	72			
Aroclor 1221	15 U	56	15	12 U	45	12	12 U	46	12	92 U	340	92			
Aroclor 1232	26 U	56	26	21 U	45	21	21 U	46	21	160 U	340	160			
Aroclor 1242	11 U	56	11	8.7 U	45	8.7	8.8 U	46	8.8	66 U	340	66			
Aroclor 1248	11 U	56	11	8.7 U	45	8.7	8.8 U	46	8.8	66 U	340	66			
Aroclor 1254	**50** J, J1	56	11	**61** J	45	8.7	**100** J	46	8.8	**1600**	340	66			
Aroclor 1260	16 U	56	16	13 U	45	13	13 U	46	13	99 U	340	99			
Total PCBs	**50** J	NA	NA	**61** J	NA	NA	**100** J	NA	NA	**1600**	NA	NA			
TOTAL METALS (mg/kg)															
Methods 6010B/6020															
Antimony	**2.49**	0.326	0.121	**0.678**	0.263	0.0973	**2.55**	0.270	0.0998	**0.416**	0.201	0.0744			
Arsenic	**14.8**	3.26	0.897	0.723 U	2.63	0.723	**10.6**	2.70	0.742	**6.93**	2.01	0.553			
Barium	**209**	0.816	0.0294	**132**	0.657	0.0237	**172**	0.674	0.0243	**96.1**	0.503	0.0181			
Beryllium	**0.326** J1	0.816	0.0228	**0.238** J1	0.657	0.0184	**0.309** J1	0.674	0.0189	**0.197** J1	0.503	0.0141			
Cadmium	**6.66**	0.816	0.0326	**1.96**	0.657	0.0263	**1.47**	0.674	0.0270	**3.35**	0.503	0.0201			
Chromium	**112**	2.45	0.228	**94.8**	1.97	0.184	**97.7**	2.02	0.189	**22.3**	1.51	0.141			
Copper	**109**	1.63	0.157	**77.1**	1.31	0.126	**84.2**	1.35	0.129	**36.3**	1.01	0.0965			
Lead	**65.6**	2.45	0.359	**53.7**	1.97	0.289	**201**	2.02	0.297	**45.4**	1.51	0.221			
Nickel	**59.1**	1.63	0.161	**63.0**	1.31	0.130	**59.9**	1.35	0.134	**36.1**	1.01	0.0995			
Selenium	1.11 U	3.26	1.11	4.47 U	13.1	4.47	0.917 U	2.70	0.917	**1.70** J1	2.01	0.683			
Silver	**0.869**	0.816	0.135	**0.946**	0.657	0.109	**0.467** J1	0.674	0.112	**0.535**	0.498	0.0826			
Zinc	**1030**	3.26	0.538	**320**	2.63	0.434	**343**	2.70	0.445	**348**	2.01	0.332			
Method SW7199															
Chromium VI	**2.9** J	1.6	0.33	**2.5**	1.3	0.26	**8.3**	1.3	0.26	**1.3**	1.0	0.20			
Method SW7471A															
Mercury	**0.144** J1	0.155	0.0109	**0.0453** J1	0.134	0.0094	**0.0736** J1	0.132	0.0093	**0.375**	0.0945	0.0066			

Bold = Detected compound
NA = Not Analyzed
ND = Not Detected

µg/kg = micrograms per kilogram
mg/kg = milligrams per kilogram
SIM = select ion monitoring

TEQ = Toxic Equivalent Concentration
PCB = Polychlorinated Biphenyls
cPAH = Carcinogenic Polycyclic Aromatic Hydrocarbons

U = Indicates the compound was not detected at or above the reporting limit.
J1 = Laboratory flag indicating the analyte was positively identified; the associated concentration is approximate and less than the reporting limit, but equal to or greater than the detection limit.
J = Indicates the analyte was positively identified; the associated numerical value is the approximate concentration of the analyte in the sample.

APPENDIX O

Corrugated Metal Pipe Video Survey (February 2012)

East end of pipe

East end of pipe below square patch.

2/19/13 P:\025\190\002\WIP\R\Ecology draft RI\Appendices\App O_Corrugated Pipe Video Survey\I-T RI_App O Fig O-1.docx

LANDAU ASSOCIATES

Boeing Isaacson-Thompson Site Tukwila, Washington	**East End of Corrugated Pipe**	Figure O-1

Corrugated Metal Pipe Video Survey
(February 2012)

(Video is included in separate file on this disk)

APPENDIX P

Storm Drain Pipeline Video Survey (October 2012)

TECHNICAL MEMORANDUM

LANDAU ASSOCIATES
ENVIRONMENTAL | GEOTECHNICAL | NATURAL RESOURCES

TO: Jim Bet, The Boeing Company

FROM: Stacy Lane and Kristy J. Hendrickson, P.E.

DATE: November 21, 2012

RE: STORM DRAIN SYSTEM
VIDEO INSPECTION SUMMARY
ISAACSON-THOMPSON
SEATTLE, WASHINGTON

This technical memorandum presents a summary of the video inspection of the storm drain lines at Isaacson-Thompson (I-T) in Seattle, Washington. Video inspection of storm drain lines was conducted following jet-cleaning of the storm drain lines. The I-T storm drain system, and those segments that were video-inspected, are shown on Figure 1. Storm drain cleaning and video inspection work was performed by Bravo Environmental of Kenmore, Washington. Video inspection of the storm drain lines was performed to confirm that jet-cleaning activities had adequately removed solids and debris from the storm drain lines, and to inspect for cracks, fractures, or breaks in the storm drain line segments that could potentially allow intrusion or infiltration of soil or groundwater.

The attachments to this technical memorandum include a summary table of the I-T storm drain system current conditions (Table 1); and selected pictures of typical storm drain lines in poor condition (cracks, fractures, visible soil or signs of groundwater infiltration; provided on Figures 2 through 18). Current conditions, as encountered during video inspection, are provided on the inspection reports produced by Bravo Environmental; these conditions have been summarized in the current conditions summary table (Table 1). A summary of the tap connections identified during video inspection activities is included as Table 2. The tables and photos are discussed in the sections below.

CURRENT CONDITIONS SUMMARY TABLE AND TAP CONNECTIONS SUMMARY TABLE

I-T storm drain lines were video inspected by Bravo Environmental and, subsequently, reviewed by Landau Associates. Review included viewing each video segment, reviewing inspection reports prepared by Bravo Environmental on each segment, and compiling notes and comments on each segment into a table. Videos and inspection reports were provided to Landau Associates on compact discs, which contained video inspection files for each storm drain segment and summary reports produced by Bravo Environmental. Video of each segment is assigned a section number on the Bravo Environmental summary reports, which is reflected in Table 1 for future video viewing reference. Table 1 includes the upstream and downstream structures that identify each segment, the date the segment was video-inspected, and general notes and comments about the condition of the segment.

A summary of the tap connections identified during video inspection activities is provided in Table 2. Videos were reviewed to determine if the tap connections were visibly plugged or capped from the main storm drain line. Tap connections identified in Table 2 as "not observed to be plugged or capped" were identified based on observations from the video inspection of the main storm drain pipe. This identification does not include an assessment of plugs or caps that may be present in other locations, but are not visible from inside the main storm drain pipe.

SELECTED PHOTOS FROM STORM DRAIN LINE SEGMENTS IN POOR CONDITION

The majority of the storm drain line segments are in good condition. Pictures of storm drain line segments in good condition are not included in this technical memorandum. Pictures have been selected and attached to this technical memorandum (Figures 2 to 18) to show an overall view of the current storm drain lines that have been identified as being in poor condition. Still frames have been extracted from the storm drain video segments to provide examples of storm drain lines in poor condition (cracks, fractures, visible soil, and other pipe defects). Figures have been numbered in the order in which their associated segments are presented in Table 1. Pictures have been selected to represent a variety of different factors affecting the condition of the storm drain lines:

- Cracks, fractures, and off-set joints are shown on Figures 2, 6, 8, 9, and 11.
- Storm drain defects and miscellaneous debris deposits or intruding joint seals are shown on Figures 3, 4, 5, 7, 10, 12, 13, 14, and 17.
- Holes in the storm drain piping (including some with visible soil) are shown on Figures 15, 16, and 18.

UNKNOWN CONNECTIONS AND PIPING VERIFICATIONS

Storm drain video inspections did not verify connections for CB-G, CB-H, CB-I, CB-J, or CB-90B. At CB-G, a down-turned steel elbow was present on the sidewall of the structure, which prohibited access to the storm drain line that may be connected to this structure. At the remaining catch basins, the following inspections were conducted:

- At CB-H, a storm drain line located on the west side of the catch basin was video-surveyed for approximately 8 ft until the survey was abandoned due to a fractured joint.
- At CB-I, a storm drain line located on the south side of the catch basin was video-surveyed for approximately 8 ft until the survey was abandoned due to blockage/obstruction. A storm drain line on the west of the catch basin could not be video-surveyed due to the presence of a down-turned steel elbow.
- At CB-J, a storm drain line located on the north side of the catch basin was video-surveyed for approximately 18 ft until the survey was abandoned because the line connected to another structure.
- At CB-90B, a storm drain line located on the north side of the catch basin was video-surveyed for approximately 72 ft until the survey was abandoned due to bend in pipe.

Although the connections to the above-identified catch basins were not verified, an overlay of these locations with the abandoned 48-inch storm drain line (abandoned and rerouted in 1990), as shown on Figure 1, indicates that these structures were likely associated with the old 48-inch storm drain line. Video surveys do not suggest that any of these locations are actively connected to the current I-T storm drain system.

The video surveys identified existing connections that were not previously identified on the storm drain maps, including connections of the following structures:

- CB-A to MH-22
- CB-C to CB-D
- CB-D to CB-77
- CB-77 to CBE
- CB-E to MH-75
- CB-B to MH-65.

Boeing will update the storm drain base maps to reflect the piping verifications identified during the storm drain video survey review.

ATTACHMENTS

Figure 1 – Storm Drain Line Video Inspection Activities
Figures 2 through 18 – Selected Screen Shots of Storm Drain Line Conditions
Table 1 – I-T Storm Drain Line Summary of Current Conditions
Table 2 – I-T Storm Drain Line Tap Connection Summary

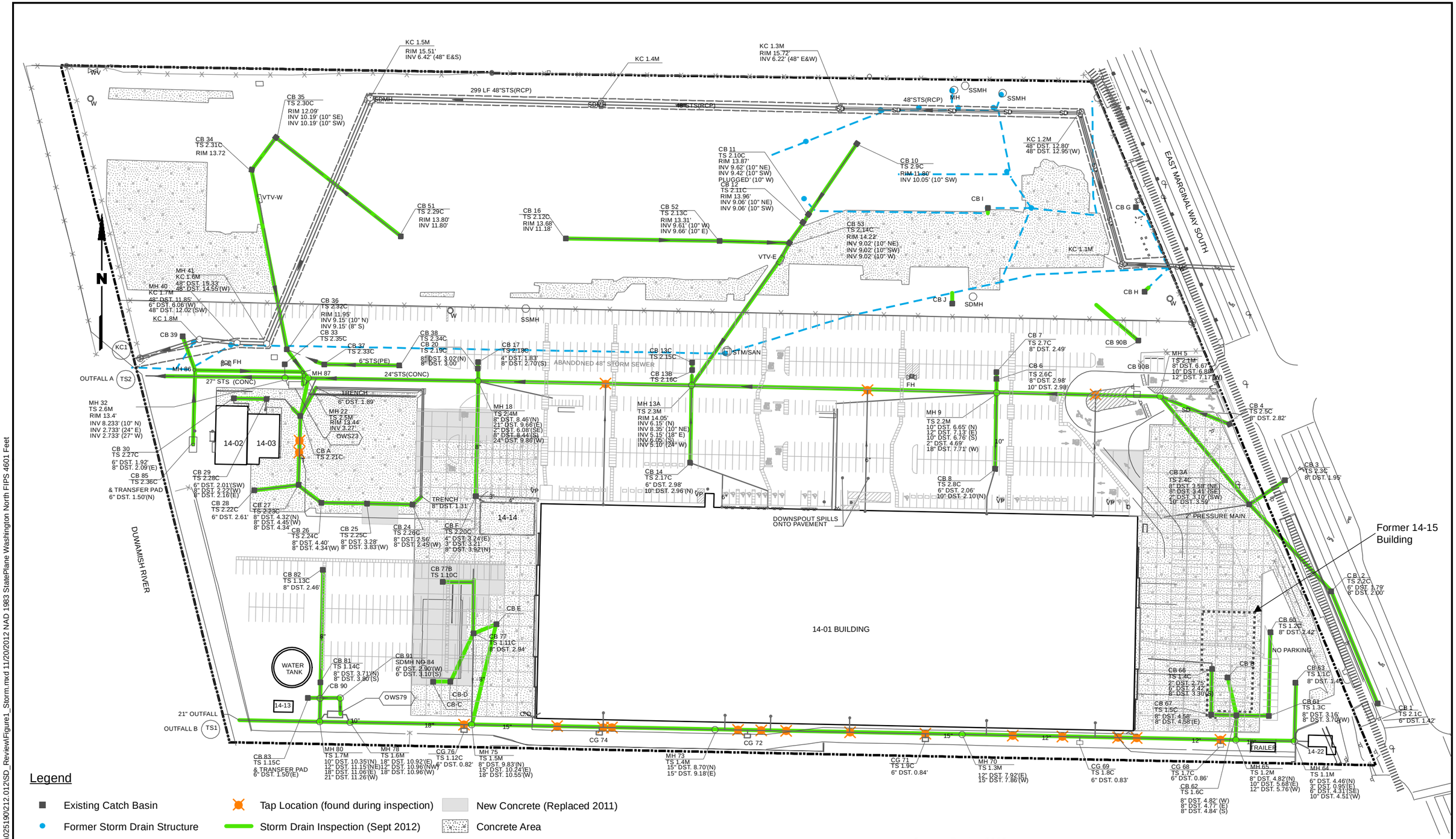

Y:\Projects\025190212.012\SD_Review\Figure1_Storm.mxd 11/20/2012 NAD 1983 StatePlane Washington North FIPS 4601 Feet

Legend

- Existing Catch Basin
- Former Storm Drain Structure
- 48-inch Storm Drain Line Abandoned and Rerouted in 1990
- Tap Location (found during inspection)
- Storm Drain Inspection (Sept 2012)
- New Concrete (Replaced 2011)
- Concrete Area
- Former Building

Note

1. Black and white reproduction of this color original may reduce its effectiveness and lead to incorrect interpretation.

0 120 240

Scale in Feet

Source: Boeing 2012

LANDAU ASSOCIATES

Boeing Isaacson-Thompson Site Tukwila, Washington	**Storm Drain Line Video Inspection Activities**	Figure 1

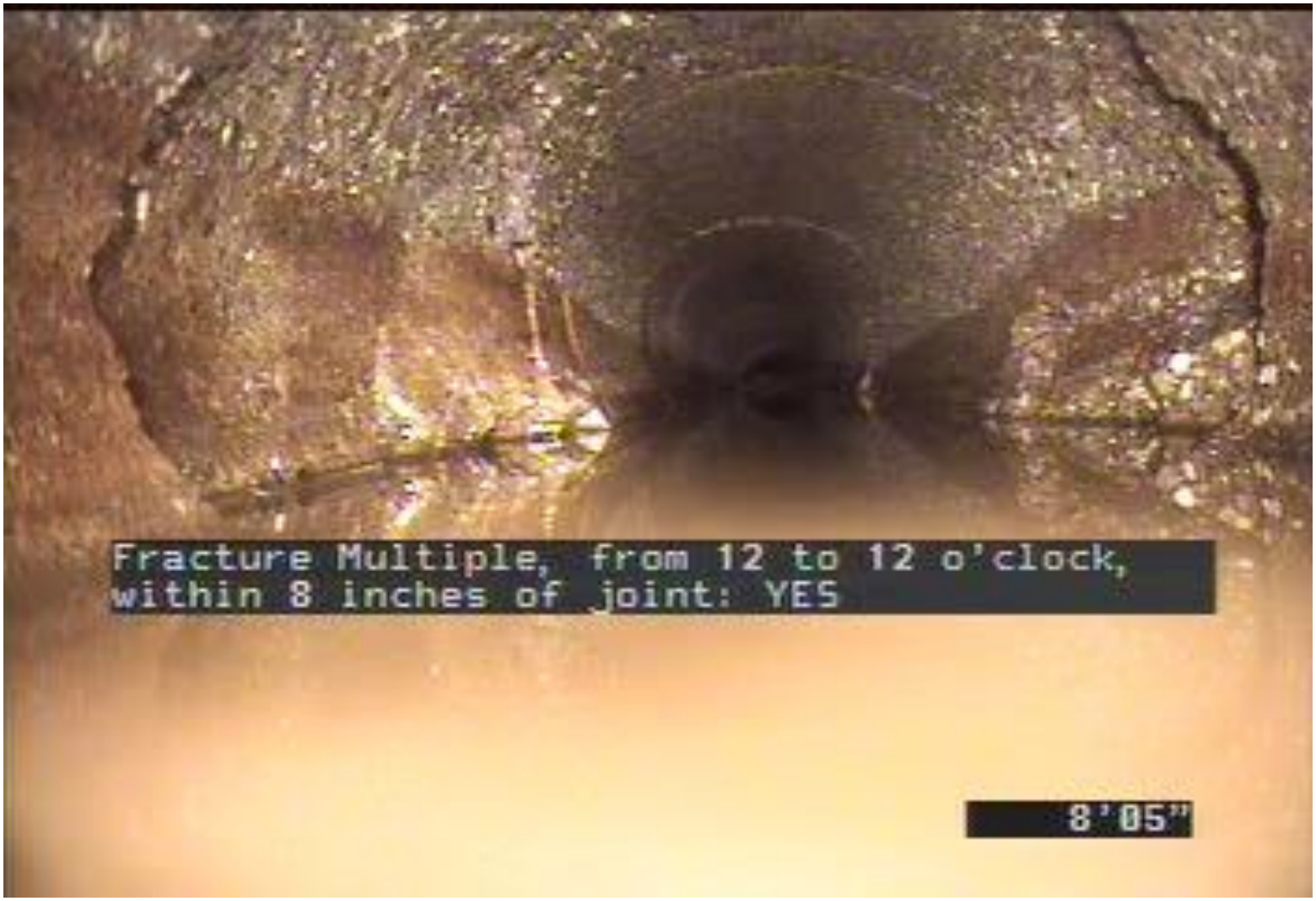

LANDAU ASSOCIATES

Boeing Isaacson-Thompson Seattle, Washington	**Selected Photos from Storm Drain Videos** **CBH to downstream unknown** **Fractured Pipe**	Figure 2

LANDAU ASSOCIATES

Boeing Isaacson-Thompson Seattle, Washington	**Selected Photos from Storm Drain Videos** **MH87 to upstream MH86** **Chip in surface liner**	Figure 3

LANDAU ASSOCIATES

Boeing Isaacson-Thompson Seattle, Washington	**Selected Photos from Storm Drain Videos** **CBJ to downstream unknown** **Corroded steel pipe with encrusted debris**	Figure 4

LANDAU ASSOCIATES

Boeing Isaacson-Thompson Seattle, Washington	**Selected Photos from Storm Drain Videos** **CBI to downstream unknown** **Settled deposits and sludge**	Figure 5

LANDAU ASSOCIATES

Boeing Isaacson-Thompson Seattle, Washington	**Selected Photos from Storm Drain Videos** **CB90B to downstream unknown** **Fractured pipe**	Figure 6

LANDAU ASSOCIATES

Boeing Isaacson-Thompson Seattle, Washington	**Selected Photos from Storm Drain Videos** **MH18 upstream to MH13A** **Encrusted deposits**	Figure 7

LANDAU ASSOCIATES

Boeing Isaacson-Thompson Seattle, Washington	**Selected Photos from Storm Drain Videos MH18 upstream to CBF Offset joint**	Figure 8

LANDAU ASSOCIATES

Boeing Isaacson-Thompson Seattle, Washington	**Selected Photos from Storm Drain Videos MH5 to upstream CB4 Fractures**	Figure 9

LANDAU ASSOCIATES

Boeing Isaacson-Thompson Seattle, Washington	**Selected Photos from Storm Drain Videos CB2 to upstream CB1 Surface cracking/spalling**	Figure 10

LANDAU ASSOCIATES

Boeing Isaacson-Thompson Seattle, Washington	**Selected Photos from Storm Drain Videos CB63 to downstream CB64 Fractures**	Figure 11

LANDAU ASSOCIATES

Boeing Isaacson-Thompson Seattle, Washington	**Selected Photos from Storm Drain Videos CB37 to downstream CB36 Blocking debris**	Figure 12

LANDAU ASSOCIATES

Boeing Isaacson-Thompson Seattle, Washington	**Selected Photos from Storm Drain Videos CB13A to upstream CB13B Intruding/blocking grout seal**	Figure 13

LANDAU ASSOCIATES

Boeing Isaacson-Thompson Seattle, Washington	**Selected Photos from Storm Drain Videos MH64 to downstream MH70 Intruding Sealing Ring**	Figure 14

LANDAU ASSOCIATES

Boeing Isaacson-Thompson Seattle, Washington	**Selected Photos from Storm Drain Videos** **CBD to downstream CB77** **Hole in Pipe**	Figure 15

LANDAU ASSOCIATES

Boeing Isaacson-Thompson Seattle, Washington	**Selected Photos from Storm Drain Videos** **Tee to downstream CB77** **Hole in Pipe**	Figure 16

LANDAU ASSOCIATES

Boeing Isaacson-Thompson Seattle, Washington	**Selected Photos from Storm Drain Videos** **CB81 to upstream CB82** **Intruding grout seal**	Figure 17

LANDAU ASSOCIATES

Boeing Isaacson-Thompson Seattle, Washington	**Selected Photos from Storm Drain Videos CB29 to upstream CB30 Hole in Pipe**	Figure 18

TABLE 1
SUMMARY OF CURRENT CONDITIONS
ISAACSON-THOMPSON STORM DRAIN LINE
SEATTLE, WASHINGTON

Video Inspection Date	Upstream Structure	Downstream Structure	Notes (a)	Cracks, fractures, or separated joints?	Disk	Corresponding Figure Number (b)	Section Number
9/26/2012	CB H	unknown	Large amounts of settled deposits throughout storm drain pipe, water level at 5% of cross-sectional area, survey abandoned at approximately 8 ft downstream due to fractured joint, unable to continue.	X	1	2	1/2
9/26/2012	CB10	CB11	Water at 5% of cross-sectional area from approx 91 ft to 107 ft upstream, no visible infiltration or leaks		1		3
9/26/2012	CB11	CB12	Clean, dry, no notable infiltration, damage, or concerns		1		4
9/26/2012	CB12	CB53	Clean, dry, no notable infiltration, damage, or concerns		1		5
9/26/2012	CB52	CB53	Clean, dry, no notable infiltration, damage, or concerns		1		6
9/26/2012	CB16	CB52	Clean, dry, no notable infiltration, damage, or concerns		1		7
9/26/2012	CB51	CB35	Clean, dry, no notable infiltration, damage, or concerns		1		8
9/26/2012	CB35	CB34	Clean, dry, no notable infiltration, damage, or concerns		1		9
9/26/2012	CB34	CB36	Clean, dry, no notable infiltration, damage, or concerns - REVIEW - not whole distance (35 ft)		1		10
9/26/2012	CB39	MH86	Clean, dry, no notable infiltration, damage, or concerns		1		11
9/27/2012	CB85	MH86	Clean, dry, no notable infiltration, damage, or concerns		1		12
9/27/2012	MH86	MH87	Water level at 5 % of cross sectional area from 0 ft to 7.5 ft upstream, chip in surface liner at 51.5 ft upstream, no visible infiltration or leaks	X	1	3	13
9/27/2012	MH87	OWS23	Clean, dry, no notable infiltration, damage, or concerns		1		14
9/27/2012	MH18	MH22	Some encrusted deposits in areas throughout segment, no visible infiltration or leaks		1		15
9/27/2012	VTV-W	CB36	Clean, dry, no notable infiltration, damage, or concerns		1		16
9/28/2012	CB J	unknown	Corroded steel pipe, encrusted with debris and solids	X	1	4	17
9/28/2012	CB I	unknown	Settled deposits at bottom of storm drain pipe, survey abandoned at 8 ft downstream due to blockage/obstruction in storm drain pipe, unable to continue.	X	1	5	18
9/28/2012	CB90B	unknown	Multiple circumferential cracks and fractures throughout length of storm drain pipe, multiple locations for soil or groundwater infiltrations, water level at 10% of cross-sectional area from 9.5 ft to 17 ft downstream, surveyed for approximately 72 feet before survey abandoned due to bend in pipe (unable to continue)	X	1	6	19
9/28/2012	CB36	MH87	Clean, dry, no notable infiltration, damage, or concerns		1		20
9/28/2012	MH13A	MH18	Encrusted deposits in areas throughout segment, small flow of water through pipe, water level up to 10% of cross-sectional area, tap connection at 171 ft upstream, no visible infiltration or leaks	X	1	7	21
9/28/2012	MH9	MH13A	Encrusted deposits in areas throughout segment, small flow of water through pipe, tap connection at 177 ft downstream, no visible infiltration or leaks	X	1		22
9/28/2012	CB F	MH18	Off-set joint at 140 ft upstream, no visible infiltration or leaks	X	1	8	23
9/28/2012	VTV-E	MH13A	Clean, dry, no notable infiltration, damage, or concerns		1		24
9/28/2012	CB53	VTV-E	Water at 5% of cross-sectional area from approx 8 ft downstream to end of pipe, no visible infiltration or leaks		1		25
10/1/2012	MH5	MH9	Tap at approximately 80 ft downstream, no notable infiltration, damage, or concerns		1		26
10/1/2012	CB4	MH5	Water level at 10% of cross-sectional area from 0 to 10 ft upstream, multiple circumferential and longitudinal fractures at 38.5 ft and 72 ft upstream, no visible infiltration or leaks	X	1	9	27
10/1/2012	CB3A	MH5	Water at 15% to 100% of cross-sectional area starting from approximately 31 ft to 39 ft downstream, small section of PVC pipe from 33 to 37 ft downstream, no visible infiltration or leaks, small cracks at approx 58 ft and 132 ft downstream,	X	1		28
10/1/2012	CB3	CB3A	Clean, dry, no notable infiltration, damage, or concerns		1		29
10/1/2012	CB2	CB3A	Water at approximately 20% of cross-sectional area from 117ft to 131 ft downstream, no visible infiltration or leaks		1		30
10/1/2012	CB1	CB2	Clean, dry, no notable infiltration, damage, or concerns; material change from concrete to ductile iron at approx 67 ft upstream from CB 2, surface cracking/spalling at approximately 81 ft upstream	X	1	10	31
10/1/2012	CB60	CB61	Clean, dry, no notable infiltration, damage, or concerns		1		32
10/1/2012	CB61	CB62	Clean, dry, no notable infiltration, damage, or concerns		1		33
10/1/2012	CB B	CB62	Circumferential fracture at approx 56 ft upstream, no visible infiltration or leaks	X	1		35
10/1/2012	CB62	CB65	Clean, dry, no notable infiltration, damage, or concerns		1		34
10/1/2012	CB66	CB67	Clean, dry, no notable infiltration, damage, or concerns		1		36
10/1/2012	CB67	CB62	Clean, dry, no notable infiltration, damage, or concerns		1		37
10/1/2012	CB63	CB64	Multiple cracks and fractures throughout length of segment, no visible infiltration or leaks	X	1	11	38
10/2/2012	CB38	CB37	Encrusted debris along length of storm drain line, no visible infiltration, damage, or leaks.	X	1		39
10/2/2012	CB37	CB36	Encrusted debris remaining in storm drain. Survey unable to proceed past 13 ft due to heavy debris remaining in storm drain, no visible infiltration, damage, or leaks	X	1	12	40
10/2/2012	CB17	CB20	Clean, dry, no notable infiltration, damage, or concerns		1		41
10/2/2012	CB20	CB18	Clean, dry, no notable infiltration, damage, or concerns		1		42
10/2/2012	CB13B	CB13A	Damaged seal/intruding grout at 12.4 ft upstream, survey abandoned, unable to continue past intruding grout	X	1	13	43
10/2/2012	CB14	CB13A	Clean, dry, no notable infiltration, damage, or concerns		1		44
10/2/2012	CB13C	CB13B	Clean, dry, no notable infiltration, damage, or concerns		1		45
10/2/2012	CB6	CB9	Circumferential fracture at approx 12.5 ft upstream, no visible infiltration or leaks		1		46
10/2/2012	CB7	CB6	Clean, cry, no notable infiltration, damage, or concerns		1		47
10/2/2012	CB8	CB9	Water at 5% of cross-sectional area from 1ft to 6 ft upstream, multiple cracks at approx 24 ft upstream, no visible infiltration or leaks	X	1		48
10/2/2012	MH65	MH70	Multiple taps along length of segment (5 total), multiple cracks along length of segment, intruding sealing ring at 128 ft downstream, no visible infiltration or leaks	X	2	14	49
10/2/2012	MH64	MH65	Clean, dry, no notable infiltration, damage, or concerns		2		50
10/2/2012	MH70	MH73	Multiple taps along length of segment (5 total), multiple cracks along length of segment, no visible infiltration or leaks	X	2		51

TABLE 1
SUMMARY OF CURRENT CONDITIONS
ISAACSON-THOMPSON STORM DRAIN LINE
SEATTLE, WASHINGTON

Video Inspection Date	Upstream Structure	Downstream Structure	Notes (a)	Cracks, fractures, or separated joints?	Disk	Corresponding Figure Number (b)	Section Number
10/2/2012	MH73	MH75	Multiple taps along length of segment (3 total), multiple cracks along length of segment, no visible infiltration or leaks	X	2		52
10/2/2012	MH75	MH78	One tap connection at 10 ft downstream, clean, dry, no notable infiltration, damage, or concerns		2		53
10/3/2012	CBC	CBD	Clean, dry, no notable infiltration, damage, or concerns		2		55
10/3/2012	CBD	CB77	Hole in pipe at approximately 17 ft downstream, liner defect at approximately 20.5 ft downstream, no visible infiltration or leaks	X	2	15	56
10/3/2012	CB77	CBE	Clean, dry, no notable infiltration, damage, or concerns		2		57
10/3/2012	tee	CB77	Holes in pipe at 54.4 ft and 54.9 ft upstream, soil is visible, no visible groundwater infiltration	X	2	16	58
10/3/2012	CBE	MH75	Circumferential fracture at 110.8 ft downstream, no visible infiltration or leaks	X	2		59
10/3/2012	CB77B	tee	Clean, dry, no notable infiltration, damage, or concerns		2		60
10/3/2012	CB82	CB81	Intruding grout at 20.6 ft upstream, circumferential crack at 123.1 ft upstream, broken pipe at 145.4 ft upstream, no visible infiltration or leaks	X	2	17	61
10/3/2012	CB81	CB90	Circumferential crack at 18.7 ft downstream, no visible infiltration or leaks	X	2		62
10/3/2012	MH91	MH90	Clean, dry, no notable infiltration, damage, or concerns		2		63
10/3/2012	MH91	OWS79	Clean, dry, no notable infiltration, damage, or concerns		2		64
10/3/2012	CB83	CB90	Clean, dry, no notable infiltration, damage, or concerns, survey abandoned at 16.3 ft downstream due to alignment left/down, unable to continue,		2		65
10/3/2012	trench	CB24	Clean, dry, no notable infiltration, damage, or concerns, survey abandoned at 10.5 ft upstream due to bend in pipe, unable to continue		2		66
10/3/2012	CB24	CB25	Clean, dry, no notable infiltration, damage, or concerns		2		67
10/3/2012	CB25	CB26	Water level at 10% of cross-sectional area from 1.2 ft to 12.3 ft upstream, no visible infiltration or leaks		2		68
10/3/2012	CB26	CB27	Clean, dry, no notable infiltration, damage, or concerns		2		69
10/3/2012	CB28	CB27	Multiple longitudinal and circumferential fractures throughout length of segment, no visible infiltration or leaks	X	2		70
10/3/2012	CB29	CBA	Clean, dry, no notable infiltration, damage, or concerns, survey abandoned at approximately 18 ft upstream due to right alignment/bend in pipe, unable to continue		2		73
10/3/2012	CB30	CB29	Hole in pipe at 16.4 ft upstream, possible soil/groundwater intrusion potential, no visible soil infiltration or groundwater leaks	X	2	18	74
10/3/2012	trench	CBA	Clean, dry, no notable infiltration, damage, or concerns		2		75
10/3/2012	CBA	tee/MH22	Clean, dry, no notable infiltration, damage, or concerns		2		76
10/3/2012	CB27	CBA	Taps at approximately 41.4 ft and 57.3 ft downstream, material change from concrete to polyethylene at 63 ft upstream, no visible infiltration or leaks		2		71/72

TABLE 2
TAP CONNECTION SUMMARY
ISAACSON-THOMPSON STORM DRAIN LINE
SEATTLE, WASHINGTON

Video Inspection Date	Up Stream Structure	Down Stream Structure	Total Tap Connections	# of Plugged or Capped Tap Connections	# of Tap Connections Not Observed to be Plugged or Capped (a)
10/3/2012	CB27	CBA	2	0	2
9/28/2012	MH13A	MH18	1	0	1
9/28/2012	MH9	MH13A	1	0	1
10/1/2012	MH5	MH9	1	0	1
10/2/2012	MH65	MH70	5	0	5
10/2/2012	MH70	MH73	5	0	5
10/2/2012	MH73	MH75	3	0	3
10/2/2012	MH75	MH78	1	0	1
		TOTALS	**19**	**0**	**19**

(a) Number of tap connections not observed to be plugged or capped is based on observations from the video inspection of the main storm drain pipes. This does not include an assessment of plugs or caps that may be present in other locations, but cannot be observed from inside the main storm drain pipe.

Storm Drain Pipeline Video Survey
(October 2012)

(Video is included in separate file on this disk)

APPENDIX Q

Detected Analytical Results for Soil Sampling Representing Soil Remaining

TABLE Q-1
HISTORICAL ARSENIC SOIL ANALYTICAL DETECTS
NORTH OF FORMER SLIP 5 AREA
BOEING ISAACSON-THOMPSON

Sample ID	Sample Date	Sample Depth	Arsenic (mg/kg)
			pCUL = 7
North of Stabilized Soil Area/Northern Property Boundary			
4	8/1/83	2.5	270.5
4	8/1/83	2.5	124
4	8/1/83	6.5	551
4	8/1/83	10.5	15
10	8/1/83	6	20
10	8/1/83	11	4.7
10-Dup	8/1/83	11	8.8
10	8/1/83	13.5	7.1
T-1	8/1/84	8-9	26
T-2	8/1/84		180
T-3	8/1/84		2300
T-4	8/1/84	8-9	10
213	1/11/88	2.5-3	3
213	1/11/88	7.5-9	3
216	1/12/88	2.5-3	4
216	1/12/88	7.5-8	133
216	1/12/88	12.5-13	2
217	1/12/88	2.5-3	4
217	1/12/88	7.5-8	331
217	1/12/88	12.5-13	4.5
217	1/12/88	17.5-18	7
219	1/13/88	2.5-3	3
219	1/13/88	7.5-9	46
219	1/13/88	12.5-13	33
221	1/13/88	2.5-3	8
221	1/13/88	7.5-8	7
221	1/13/88	12.5-13	3
225	1/13/88	3-3.5	153
225	1/13/88	7.5-8	30
225	1/13/88	12.5-13	6
229	1/14/88	3.5-4	37
229	1/14/88	8.5-9	384
229	1/14/88	13.5-14	1
I-8	1/19/88	12.5	262
I-8	1/19/88	17.5	53
I-8	1/19/88	27.5	5
I-8	1/19/88	37.5	3
I-8	1/19/88	47.5	3
239	1/22/88	3.5	34
239	1/22/88	8.5	3500
239	1/22/88	13.5	511
I-201s	1/22/88	2.5	10
I-201s	1/22/88	7.5	136
I-201s	1/22/88	12.5	176
I-201s	1/22/88	17.5	15
I-201s	1/22/88	27.5	3
242	1/25/88	13	113

TABLE Q-1
HISTORICAL ARSENIC SOIL ANALYTICAL DETECTS
NORTH OF FORMER SLIP 5 AREA
BOEING ISAACSON-THOMPSON

Sample ID	Sample Date	Sample Depth	Arsenic (mg/kg)	
			pCUL = 7	
N-01 (BAY13)	5/16/89	0-12	420	
N-02 (BAY13)	5/16/89	0-12	130	
N-03 (BAY13)	5/16/89	0-12	110	
N-01 (CY)	4/27/89	0-12	350	
N-02 (CY)	3/31/89	0-12	270	
N-03 (CY)	4/4/89	0-12	170	
N-04 (CY)	4/21/89	0-12	200	
18N	1991	3-5	30	(a)
18N	1991	5-9	310	
22N	1991	3-5	40	(a)
22N	1991	5-9	150	
317	6/22/92	0-2.5	13.1	
317	6/22/92	2.5-6.5	49	
317	6/22/92	6.5-9.5	59	
318	6/22/92	2.5-6.5	98.4	
318	6/22/92	6.5-9.5	69.8	
416	8/31/92	0-2.5	240	
416	8/31/92	2.5-6.5	547	
416	8/31/92	6.5-10.5	37	
417	8/31/92	0-2.5	215	
417	8/31/92	2.5-6	523	
417	8/31/92	6-10.5	486	
IMR-3	11/13/08		294	
IDP-12	2/3/09	12	204	
IDP-13	2/3/09	12	18	
IDP-14	2/3/09	11	220	
IDP-15	2/3/09	12	274	
MW-22	11/11/11	2-3.5	3.0	
MW-22	11/11/11	5-6.5	56.4	
MW-22	11/11/11	8-9.5	535	
MW-22	11/11/11	13.5-15	58.8	
West of Stabilized Soil Area				
I-4	10/20/83	3	510	
243	1/25/88	3	61	
243	1/25/88	8	51	
243	1/25/88	13	7	
24B	1991	1-3	10	(a)
24B	1991	3-5	50	(a)
24B	1991	5-9	2250	(a)
25A	1991	5-9	460	
25B	1991	3-5	10	(a)
25B	1991	5-9	950	
25C	1991	5-9	1500	(a)
25D	1991	5-9	410	

TABLE Q-1
HISTORICAL ARSENIC SOIL ANALYTICAL DETECTS
NORTH OF FORMER SLIP 5 AREA
BOEING ISAACSON-THOMPSON

Sample ID	Sample Date	Sample Depth	Arsenic (mg/kg)	
			pCUL = 7	
25N	1991	1-3	50	(a)
25N	1991	5-9	30	(a)
26B	1991	5-9	2500	(a)
27B	1991	3-5	90	
27B	1991	5-9	2000	(a)
28A	1991	1-3	10	(a)
28A	1991	3-5	40	(a)
28A	1991	5-9	280	
28B	1991	5-9	100	(a)
28D	1991	1-3	20	(a)
28D	1991	3-5	10	(a)
28D	1991	5-9	200	
29B	1991	5-9	3500	(a)
30B	1991	3-5	270	
30B	1991	5-9	400	
31A	1991	1-3	10	(a)
31A	1991	3-5	10	(a)
31A	1991	5-9	140	
31B	1991	3-5	270	
31B	1991	5-9	330	
IDP-1	2/2/09	4	60	
IDP-1A	2/2/09	9	186	
IDP-1A	2/2/09	14	9	
IDP-2	2/2/09	4	180	
IDP-3	2/2/09	4	34	
IDP-3	2/2/09	8	48	
IDP-4	2/2/09	4	15	
IDP-4	2/2/09	8	17	
IDP-5	2/2/09	8	333	
IDP-6	2/2/09	8	71	
IDP-6A	2/3/09	3	14	
PBI-1	7/27/09	2	28.9	J
PBI-1	7/27/09	5	5.8	
PBI-1	7/27/09	8	14.7	
PBI-2	7/27/09	2	23.5	
PBI-2A	7/27/09	5	329	
PBI-2A	7/27/09	8	58.2	
MW-20	11/9/2011	2-3.5	7.5	
MW-20	11/9/2011	5-6.5	139	
MW-20	11/9/2011	8-9.5	5.5	
MW-20	11/9/2011	14.5-16	10.5	
MW-21	11/11/2011	2-3.5	36.6	
MW-21	11/11/2011	5-6.5	36.5	
MW-21	11/11/2011	8-9.5	139	
MW-21	11/11/2011	13.5-15	221	
MW-21	11/11/2011	17-18.5	12.6	

TABLE Q-1
HISTORICAL ARSENIC SOIL ANALYTICAL DETECTS
NORTH OF FORMER SLIP 5 AREA
BOEING ISAACSON-THOMPSON

Sample ID	Sample Date	Sample Depth	Arsenic (mg/kg)
			pCUL = 7
South of Stabilized Soil Area			
13	8/1/83	9	7.2
13	8/1/83	13.5	4.5
14	8/1/83	2	41
I-200s	1/14/88	2.5	3
I-200s	1/14/88	7.5	4
I-200s	1/14/88	12.5	2
I-200s	1/14/88	22.5	4
211	1/12/88	3.5-4	4
211	1/12/88	13.5-14	2
218	1/25/88	3-3.5	2
218	1/25/88	8-8.5	2
218	1/25/88	13-13.5	3
218	1/25/88	18-18.5	5
235	1/14/88	3.5	59
235	1/14/88	8.5	40
235	1/14/88	13.5	51
238	1/22/88	13.5	242
241	1/14/88	3.5	43
241	1/14/88	8.5	10
241	1/14/88	13.5	63
S-01-B1 (CY)	4/19/89	0-12	180
S-02 (CY)	3/31/89	0-12	97
S-04 (CY)	4/21/89	0-12	130
S-01 (BAY13)	5/17/89	0-12	83
S-02-A1 (BAY13)	5/18/89	0-12	180
S-03-A1 (BAY13	5/18/89	0-12	170
E-01-C1 (BAY13)	5/24/89	0-12	250
18E	1991	1-3	10 (a)
18E	1991	3-5	20 (a)
18E	1991	5-9	200
313	6/22/92	0-2.5	47.6
313	6/22/92	2.5-6.5	15.8
328	6/22/92	0-2.5	187
328	6/22/92	2.5-6.5	166
328	6/22/92	6.5-9.5	124
IMR-5	10/17/08		8
IMR-13	11/4/08		77
IMR-14	11/4/08		70
IMR-16	11/4/08		30
IMR-18	11/13/08		397
IDP-8	2/3/09	3	32
IDP-9	2/3/09	3	30
IDP-10	2/3/09	2	23
MW-15	11/15/11	2-3.5	7.3
MW-15	11/15/11	5-6.5	3.0

TABLE Q-1
HISTORICAL ARSENIC SOIL ANALYTICAL DETECTS
NORTH OF FORMER SLIP 5 AREA
BOEING ISAACSON-THOMPSON

Sample ID	Sample Date	Sample Depth	Arsenic (mg/kg)
			pCUL = 7
MW-15	11/15/11	8-9.5	3.8
MW-15	11/15/11	12.5-14	2.4
MW-18	11/8/11	2-3.5	8.8
MW-18	11/8/11	5-6.5	35.5
MW-18	11/8/11	8-9.5	18.9
MW-18	11/8/11	11.5-13	13.5
Stabilized Soil Area			
214	1/13/88	13.5-14	4
220	1/13/88	13.5-14	3
226	1/22/88	13.5-14	90
231	1/22/88	13.5-14	60
IMR-4	10/17/08		1120
IMR-6	10/17/08		2440
IMR-8	10/17/08		253
IMR-10	11/4/08		38
IMR-11	10/27/08		524
IMR-11	11/4/08		439
IMR-12	10/27/08		1780
IMR-12	11/4/08		485
IMR-15	11/4/08		919
MW-23	11/9/11	11-12.5	102
MW-23	11/9/11	12.5-14	331
MW-24	11/14/11	12.5-14	1640
MW-24	11/14/11	14-15.5	1130
Former Sump/Northeast Property Corner			
IssacEx-01-5	11/30/06		18.1
IssacEx-02-1.5	11/30/06		25.1
IssacEx-03-2	11/30/06		6.6
Former Paint Storage Area			
2	8/1/83	2.5	8.7
SB-9	11/14/11	2-3.5	3.7
SB-9	11/14/11	5-6.5	3.4
SB-9	11/14/11	8-8.5	2.0
SB-9	11/14/11	14-15.5	2.2
SB-10	11/1/11	2-3.5	25.9
SB-10	11/1/11	5-6.5	2.7
SB-10	11/1/11	8-9.5	2.1
SB-10	11/1/11	13.5-15	187
SB-11	11/14/11	2-3.5	501
SB-11	11/14/11	5-6.5	209
SB-11	11/14/11	8-9	15.4
SB-11	11/14/11	14-15.5	43.5

TABLE Q-1
HISTORICAL ARSENIC SOIL ANALYTICAL DETECTS
NORTH OF FORMER SLIP 5 AREA
BOEING ISAACSON-THOMPSON

Sample ID	Sample Date	Sample Depth	Arsenic (mg/kg)
			pCUL = 7
Former Diesel and Gasoline Tanks			
1	8/1/83	5.5	3.4
TP-109-SWS	10/25/11	9-10	2.3
Vicinity of Former Steam Cleaning Rack and Sump and Boiler Tank Area			
B-12	1983	14	23
I-2	10/14/83	14.5	1200
PZFA	8/28/84	11	530
PZFC	8/28/84	12	290
PZTCE-7'	9/24/84	8-9	1800
PZTCE-14'	9/24/84	8-9	940
PZT-20'	9/24/84	8	1700
PZTCW	9/24/84	5	1100
PZTCW	9/24/84	10	67
222	1/13/88	12.5-13	46
223	1/13/88	12.5-13	6
227	1/13/88	13.5-14	3
IMR-19	11/13/08		383
MW-25	11/14/11	8-9.5	87.9
MW-25	11/14/11	13.5-15	55.8
MW-25	11/14/11	15.5-17	37.7
Tar-Like Material Area			
TP-107-B	10/26/11	11-12	4.5
TP-107-SWN	10/26/11	1-2	85.3
TP-107-SWN	10/26/11	2-3	7.0
TP-107-SWS	10/26/11	1-2	65.0
TP-107-SWE	10/26/11	1-2	73.8
TP-107-SWW	10/26/11	1-2	215
TP-108-B	10/26/11	11-12	1.9
TP-108-SWN	10/26/11	1-2	35.4
TP-108-SWN	10/26/11	2-3	1.5
TP-108-SWS	10/26/11	1-2	75.0
TP-108-SWE	10/26/11	1-2	34.4
TP-108-SWW	10/26/11	1-2	86.3

TABLE Q-1
HISTORICAL ARSENIC SOIL ANALYTICAL DETECTS
NORTH OF FORMER SLIP 5 AREA
BOEING ISAACSON-THOMPSON

Sample ID	Sample Date	Sample Depth	Arsenic (mg/kg)
			pCUL = 7
Former Slip 5 Outfall Area			
18	8/1/83	2	11
18	8/1/83	6.5	4.2
SB-6	11/1/11	2-3.5	54.5
SB-6	11/1/11	5-6.5	11.9
SB-6	11/1/11	8-9.5	2.6
SB-6	11/1/11	13.5-15	2.6
SB-7	11/1/11	2-3.5	10.6
SB-7	11/1/11	5-6.5	4.1
SB-7	11/1/11	8-9.5	1.8
SB-7	11/1/11	13-14.5	4.0
SB-8	11/14/11	2-3.5	7.9
SB-8	11/14/11	5-6.5	3.9
SB-8	11/14/11	8-9.5	3.1
SB-8	11/14/11	14-15.5	2.4
MW-14	11/8/11	2-3.5	2.4
MW-14	11/8/11	5-6.5	4.7
MW-14	11/8/11	8-9.5	7.2
MW-14	11/8/11	13-14.5	1.6

J = Indicates the analyte was positively identified; the associated numerical value is the approximate concentration of the analyte in the sample.
mg/kg = milligrams per kilogram
pCUL = Preliminary Cleanup Level
Box = Exceeds Preliminary Cleanup Level

(a) = Field sample results

TABLE Q-2
SOIL ANALYTICAL DETECTS
NORTH OF FORMER SLIP 5 AREA
BOEING ISAACSON-THOMPSON
REMEDIAL INVESTIGATION

		Northern Property Boundary																
	Preliminary Cleanup Levels	4 (2.5) 8/1/1983	4 (6.5) 8/1/1983	4 (10.5) 8/1/1983	10 (6) 8/1/1983	10 (11) 8/1/1983	Dup of 10 10-Dup (11) 8/1/1983	10 (13.5) 8/1/1983	IMR-3 OA02A 11/13/2008	IDP-11 (11) OL03E 2/3/2009	IDP-12 (12) OL03F 2/3/2009	IDP-13 (12) OL03G 2/3/2009	IDP-14 (11) OL03H 2/3/2009	IDP-15 (12) OL03I 2/3/2009	IT-MW-22(2-3.5) TW89I 11/11/2011	IT-MW-22(5-6.5) TW89J 11/11/2011	IT-MW-22(8-9.5) TW89K 11/11/2011	IT-MW-22(13.5-15) TW89L 11/11/2011
VOLATILES (µg/kg)																		
Method SW8260C																		
Chloromethane	1,600									0.8 U	0.6 U	0.8 U	0.9 U	0.6 U	1.3 U	1.3 U	1.5 U	1.0 U
Methylene Chloride	2,400									**2**	**1.7**	1.5 U	**3.4**	**2.2**	**5.4**	**1.6** J1	**2.1** J1	**1.9** J1
Acetone	510,000									**31**	**21**	**38**	**30**	**58**	**25** J	**18** J	**44** J	**19** J
Carbon Disulfide	75,000									0.8 U	0.6 U	0.8 U	0.9 U	**2.6**	**2.6**	**2.8**	**1.3** J1	**3.9**
2-Butanone	430,000									4 U	3 U	3.8 U	4.3 U	**7.4**	**3.7** J1	6.5 U	**6.1** J1	5.0 U
Trichloroethene	51									0.8 U	0.6 U	0.8 U	0.9 U	0.6 U	**1.5**	**0.9** J1	**1.7**	1.0 U
Benzene	93									**9**	0.6 U	0.8 U	**0.9**	**0.7**	**1.6**	1.3 U	**0.8** J1	1.0 U
Tetrachloroethene	260									0.8 U	0.6 U	0.8 U	0.9 U	0.6 U	1.3 U	1.3 U	1.5 U	1.0 U
Toluene	100,000									0.8 U	0.6 U	0.8 U	0.9 U	0.6 U	**1.9**	1.3 U	1.5 U	1.0 U
Ethylbenzene	230									0.8 U	0.6 U	0.8 U	0.9 U	0.6 U	1.3 U	1.3 U	1.5 U	1.0 U
Styrene	16,000,000									0.8 U	0.6 U	0.8 U	0.9 U	0.6 U	**0.8** J1	1.3 U	1.5 U	1.0 U
Trichlorofluoromethane	200,000									0.8 U	0.6 U	0.8 U	0.9 U	0.6 U	1.3 U	1.3 U	1.5 U	1.0 U
m,p-Xylene	160,000									0.8 U	0.6 U	0.8 U	0.9 U	0.6 U	**1.2** J1	1.3 U	1.5 U	1.0 U
o-Xylene	200,000									0.8 U	0.6 U	0.8 U	0.9 U	0.6 U	**0.7** J1	1.3 U	1.5 U	1.0 U
1,3-Dichlorobenzene	3,840									0.8 U	0.6 U	0.8 U	0.9 U	0.6 U	1.3 U	1.3 U	1.5 U	1.0 U
1,4-Dichlorobenzene	3,500									0.8 U	0.6 U	0.8 U	0.9 U	0.6 U	1.3 U	1.3 U	1.5 U	1.0 U
Methyl Iodide	---									0.8 U	0.6 U	0.8 U	**3.2**	0.6 U	1.3 U	1.3 U	**6.3**	1.0 U
1,3,5-Trimethylbenzene	800,000									0.8 U	0.6 U	0.8 U	0.9 U	0.6 U	1.3 U	1.3 U	1.5 U	1.0 U
1,2,4-Trimethylbenzene	800,000									0.8 U	0.6 U	0.8 U	0.9 U	0.6 U	1.3 U	1.3 U	1.5 U	1.0 U
Isopropylbenzene	78,000									0.8 U	0.6 U	0.8 U	0.9 U	0.6 U	1.3 U	1.3 U	1.5 U	1.0 U
n-Propylbenzene	11,000									0.8 U	0.6 U	0.8 U	0.9 U	0.6 U	1.3 U	1.3 U	1.5 U	1.0 U
4-Isopropyltoluene	---									0.8 U	0.6 U	0.8 U	0.9 U	0.6 U	1.3 U	1.3 U	1.5 U	1.0 U
n-Butylbenzene	27,000									0.8 U	0.6 U	0.8 U	0.9 U	0.6 U	1.3 U	1.3 U	1.5 U	1.0 U
Naphthalene	2,100									4 U	3 U	3.8 U	4.3 U	3.2 U	6.5 U	6.5 U	7.3 U	5.0 U
SEMIVOLATILES (µg/kg)																		
Method SW8270D																		
Phenol	1,900,000										64 U		58 U		19 U	19 U	18 U	19 U
Benzyl Alcohol	8,000,000										64 U		58 U		19 UJ	19 UJ	18 UJ	19 UJ
4-Methylphenol	41,000										64 U		58 U		38 U	**23** J1	**34** J1	38 U
2,4-Dimethylphenol	95,000										64 U		58 U		38 U	38 U	37 U	38 U
Benzoic Acid	9,000										640 U		580 U		380 U	380 U	370 U	380 U
Naphthalene	2,100										64 U		58 U		19 U	**55**	**17** J1	19 U
2-Methylnaphthalene	320,000										64 U		58 U		19 U	**35**	18 U	19 U
Acenaphthylene	---										64 U		58 U		19 U	**11** J1	18 U	19 U
Acenaphthene	230,000										64 U		58 U		19 U	**19**	18 U	19 U
Dibenzofuran	80,000										64 U		58 U		19 U	**19**	18 U	19 U
Fluorene	150,000										64 U		58 U		19 U	**21**	18 U	19 U
Phenanthrene	---										64 U		58 U		**15** J1	**66**	**21**	19 U
Carbazole	50,000										64 U		58 U		19 U	19 U	18 U	19 U
Anthracene	1,600,000										64 U		58 U		19 U	**16** J1	18 U	19 U
Di-n-Butylphthalate	26,000										64 U		58 U		19 U	19 U	18 U	19 U
Fluoranthene	230,000										64 U		58 U		19 U	**60**	**19**	19 U
Pyrene	240,000										64 U		58 U		**16** J1	**68**	**20**	19 U
Benzo(a)anthracene	---										64 U		58 U		19 U	**21**	18 U	19 U
bis(2-Ethylhexyl)phthalate	56,600										64 U		58 U		34 U	26 U	30 U	30 U
Chrysene	---										64 U		58 U		**44**	**23**	**10** J1	19 U
Benzo(a)pyrene	---										64 U		58 U		**14** J1	19 U	18 U	19 U
Indeno(1,2,3-cd)pyrene	---										64 U		58 U		19 U	19 U	18 U	19 U
Dibenz(a,h)anthracene	---										64 U		58 U		19 U	19 U	18 U	19 U
Benzo(g,h,i)perylene	---										64 U		58 U		19 U	19 U	18 U	19 U
1-Methylnaphthalene	16,000										64 U		58 U		19 U	**26**	18 U	19 U
Total Benzofluoranthenes	---														**26**	**32**	**12** J1	19 U
cPAH TEQ	15										ND		ND		**17** J	**5.5**	**1.3** J	ND

TABLE Q-2
SOIL ANALYTICAL DETECTS
NORTH OF FORMER SLIP 5 AREA
BOEING ISAACSON-THOMPSON
REMEDIAL INVESTIGATION

		Northern Property Boundary																
	Preliminary Cleanup Levels	4 (2.5) 8/1/1983	4 (6.5) 8/1/1983	4 (10.5) 8/1/1983	10 (6) 8/1/1983	10 (11) 8/1/1983	Dup of 10 10-Dup (11) 8/1/1983	10 (13.5) 8/1/1983	IMR-3 OA02A 11/13/2008	IDP-11 (11) OL03E 2/3/2009	IDP-12 (12) OL03F 2/3/2009	IDP-13 (12) OL03G 2/3/2009	IDP-14 (11) OL03H 2/3/2009	IDP-15 (12) OL03I 2/3/2009	IT-MW-22(2-3.5) TW89I 11/11/2011	IT-MW-22(5-6.5) TW89J 11/11/2011	IT-MW-22(8-9.5) TW89K 11/11/2011	IT-MW-22(13.5-15) TW89L 11/11/2011
PAHs (µg/kg)																		
Method SW8270D-SIM																		
Naphthalene	2,100														4.7 U	**69**	**27**	4.8 U
2-Methylnaphthalene	320,000														**2.9** J1	**35**	**9.9**	4.8 U
1-Methylnaphthalene	16,000														**3.0** J1	**10**	**9.5**	4.8 U
Total Naphthalenes	---														**5.9** J1	**114**	**46.4**	4.8 U
Acenaphthylene	---														4.7 U	**22**	**5.0**	4.8 U
Acenaphthene	230,000														4.7 U	**29**	**6.9**	4.8 U
Fluorene	150,000														4.7 U	**26**	**6.4**	4.8 U
Phenanthrene	---														**11**	**93**	**37**	**5.2**
Anthracene	1,600,000														4.7 U	**21**	**6.1**	4.8 U
Fluoranthene	230,000														**8.4**	**120**	**36**	**10**
Pyrene	240,000														**11**	**100**	**32**	**13**
Benzo(a)anthracene	---														**5.5**	**28**	**10**	**9.4**
Chrysene	---														**33**	**34**	**15**	**9.5**
Benzo(a)pyrene	---														**11**	**26**	**12**	**13**
Indeno(1,2,3-cd)pyrene	---														**5.0**	**16**	**6.6**	**5.0**
Dibenz(a,h)anthracene	---														4.7 U	**5.0**	4.6 U	4.8 U
Benzo(g,h,i)perylene	---														**13**	**19**	**10**	**6.9**
Dibenzofuran	80,000														4.7 U	**26**	**9.4**	4.8 U
Total Benzofluoranthenes	---														**14**	**41**	**20**	**15**
cPAH TEQ	15														**13.8**	**34.8**	**15.8**	**16.0**
PCBs (µg/kg)																		
Method SW8082																		
Aroclor 1254	0.29										31 U		31 U		32 U	32 U	31 U	31 U
Aroclor 1260	5.4										31 U		31 U		32 U	32 U	31 U	31 U
Total PCBs	1.8		200 U								ND		ND		ND	ND	ND	ND
TOTAL PETROLEUM HYDROCARBONS (mg/kg)																		
NWTPH-HCID																		
Lube Oil	---									100 U	100 U	100 U	100 U	100 U				
NWTPH-Dx																		
Diesel-Range Organics	2,000														**64** J	**13** J	**10** J	5.9 U
Oil-Range Organics	2,000														**220**	**25**	**22**	12 U
NWTPH-G																		
Gasoline-Range Organics	100/30														7.6 U	9.4 U	8.0 U	6.9 U
TOTAL METALS (mg/kg)																		
Methods 200.8/7471A/SW7196A																		
Antimony	5														0.2 U	0.3 U	0.3 U	0.2 U
Barium	640		**33**						**95.5**						**26.6**	**67.3**	**67.6**	**39.0**
Beryllium	160														0.2 U	**0.4**	**0.3**	0.2 U
Cadmium	1.3		**0.06**						**1.6**	0.2 U	0.3 U	0.3 U	0.2 U	0.3 U	0.1 U	**0.7**	**0.3**	0.1 U
Chromium	1,480		**11**						**65.8**	**11.8**	**16.3**	**23.5**	**15.4**	**17.3**	**15.6**	**24**	**15.1**	**11.9**
Chromium VI	3.8														0.438 U	0.547 U	0.526 U	0.512 U
Copper	36									**13.5**	**163**	**131**	**624**	**47.2**	**14.3**	**28.8**	**804**	**388**
Lead	250		**2.4**						**126**	2 U	**4**	**4**	**6**	**5**	**4.1**	**12.2**	**6.8**	**1.8**
Mercury	1.5		**0.04**						**1.44**	0.05 U	**0.06**	**0.08**	**0.21**	**0.06**	0.02 U	**0.14**	**0.10**	0.03 U
Nickel	210		**9.2**												**9.0**	**17.2**	**13.2**	**8.4**
Silver	170		0.3 U						0.4 U						0.2 U	0.3 U	0.3 U	0.2 U
Zinc	1,400	**124**	**40**	**132**	**59.5**	**31.8**	**31.8**	**27.2**		**35**	**354**	**97**	**77**	**96**	**26**	**62**	**66**	**235**
CONVENTIONALS (mg/kg)																		
Oil and Grease	---	**350**		**130**	**130**	100 U	69 U	**92**										
Total Organic Carbon	---	**2400**	**1800**	**1500**														

TABLE Q-2
SOIL ANALYTICAL DETECTS
NORTH OF FORMER SLIP 5 AREA
BOEING ISAACSON-THOMPSON
REMEDIAL INVESTIGATION

		Western Property Boundary (West of Stabilized Soil Area)																				
	Preliminary Cleanup Levels	I-4 (3) 10/20/1983	PBI-1 (2) PI24A 7/27/2009	PBI-1 (5) PI24B 7/27/2009	PBI-1 (8) PI24C 7/27/2009	PBI-2 (2) PI24D 7/27/2009	PBI-2A (5) PI24E 7/27/2009	PBI-2A (8) PI24F 7/27/2009	IDP-6 (8) OK85AB 2/2/2009	IDP-6 (12) OK85AC 2/2/2009	IDP-6A (3) OL03J 2/3/2009	IDP-7 (3) OL03A 2/3/2009	IT-MW-20(2-3.5) TW35G 11/09/2011	IT-MW-20(5-6.5) TW35H 11/09/2011	IT-MW-20(8-9.5) TW35I 11/09/2011	IT-MW-20(14.5-16) TW35J 11/09/2011	IT-MW-21(2-3.5) TW89D 11/11/2011	IT-MW-21(5-6.5) TW89E 11/11/2011	IT-MW-21(8-9.5) TW89F 11/11/2011	IT-MW-21(13.5-15) TW89G 11/11/2011	IT-MW-21(17-18.5) TW89H 11/11/2011	IT-MW-21(24.5-26) TW89M 11/11/2011
VOLATILES (µg/kg)																						
Method SW8260C																						
Chloromethane	1,600											1.1 U	1.1 U	1.1 U	1.4 U	1.1 U	1.2 UJ	1.3 UJ	1.6 U	1.4 U	1.2 U	1.3 U
Methylene Chloride	2,400											**4.3**	**2.2**	**1.7** J1	**3.5**	**3.7**	**2.9**	**13**	**3.2**	**9.4**	**7.7**	**2.5** J1
Acetone	510,000											**150**	**58**	**76**	**130**	**10**	**22** J	**48** J	**46** J	**21** J	**24** J	**20** J
Carbon Disulfide	75,000											**2.2**	**2.0**	1.1 U	1.4 U	1.1 U	**3.3**	1.3 U	**2.2**	**2.4**	**2.1**	**4.5**
2-Butanone	430,000											**13**	**11**	**3.6** J1	**5.9** J1	5.4 U	5.8 U	6.5 U	**4.3** J1	7.0 U	5.9 U	6.3 U
Trichloroethene	51											**1.6**	1.1 U	1.1 U	1.4 U	1.1 U	**1.4**	1.3 U	**0.8** J1	**1.0** J1	**1.0** J1	**1.4**
Benzene	93											**2.7**	**1.9**	**0.6** J1	**0.8** J1	**1.0** J1	1.2 U	1.3 U	1.6 U	1.4 U	**0.7** J1	1.3 U
Tetrachloroethene	260											1.1 U	1.1 U	1.1 U	1.4 U	1.1 U	1.2 U	1.3 U	1.6 U	1.4 U	1.2 U	1.3 U
Toluene	100,000											**1.7**	**1.1**	1.1 U	1.4 U	1.1 U	1.2 U	1.3 U	1.6 U	1.4 U	1.2 U	1.3 U
Ethylbenzene	230											1.1 U	1.1 U	1.1 U	1.4 U	1.1 U	1.2 U	1.3 U	1.6 U	1.4 U	1.2 U	1.3 U
Styrene	16,000,000											1.1 U	1.1 U	1.1 U	1.4 U	1.1 U	1.2 U	1.3 U	1.6 U	1.4 U	1.2 U	1.3 U
Trichlorofluoromethane	200,000											1.1 U	1.1 U	1.1 U	1.4 U	1.1 U	1.2 U	1.3 U	1.6 U	1.4 U	1.2 U	1.3 U
m,p-Xylene	160,000											1.1 U	1.1 U	1.1 U	1.4 U	1.1 U	1.2 U	1.3 U	1.6 U	1.4 U	1.2 U	1.3 U
o-Xylene	200,000											1.1 U	1.1 U	1.1 U	1.4 U	1.1 U	1.2 U	1.3 U	1.6 U	1.4 U	1.2 U	1.3 U
1,3-Dichlorobenzene	3,840											1.1 U	1.1 U	1.1 U	1.4 U	1.1 U	1.2 U	1.3 U	1.6 U	1.4 U	1.2 U	1.3 U
1,4-Dichlorobenzene	3,500											1.1 U	1.1 U	1.1 U	1.4 U	1.1 U	1.2 U	1.3 U	1.6 U	1.4 U	1.2 U	1.3 U
Methyl Iodide	---											1.1 U	1.1 U	1.1 U	1.4 U	1.1 U	1.2 U	1.3 U	1.6 U	1.4 U	1.2 U	1.3 U
1,3,5-Trimethylbenzene	800,000											1.1 U	1.1 U	1.1 U	1.4 U	1.1 U	1.2 U	1.3 U	1.6 U	1.4 U	1.2 U	1.3 U
1,2,4-Trimethylbenzene	800,000											1.1 U	1.1 U	1.1 U	1.4 U	1.1 U	1.2 U	1.3 U	1.6 U	1.4 U	1.2 U	1.3 U
Isopropylbenzene	78,000											1.1 U	1.1 U	1.1 U	1.4 U	1.1 U	1.2 U	1.3 U	1.6 U	1.4 U	1.2 U	1.3 U
n-Propylbenzene	11,000											1.1 U	1.1 U	1.1 U	1.4 U	1.1 U	1.2 U	1.3 U	1.6 U	1.4 U	1.2 U	1.3 U
4-Isopropyltoluene	---											1.1 U	1.1 U	1.1 U	1.4 U	1.1 U	1.2 U	1.3 U	1.6 U	1.4 U	1.2 U	1.3 U
n-Butylbenzene	27,000											1.1 U	1.1 U	1.1 U	1.4 U	1.1 U	1.2 U	1.3 U	1.6 U	1.4 U	1.2 U	1.3 U
Naphthalene	2,100											5.7 U	5.3 U	5.6 U	7.1 U	5.4 U	5.8 U	6.5 U	7.8 U	7.0 U	5.9 U	6.3 U
SEMIVOLATILES (µg/kg)																						
Method SW8270D																						
Phenol	1,900,000								61 U	65 U	58 U		20 U	19 U	20 U	19 U	18 U	18 U	19 U	19 U	19 U	NA
Benzyl Alcohol	8,000,000								61 U	65 U	58 U		20 U	19 U	20 U	19 U	18 UJ	18 UJ	19 UJ	19 UJ	19 UJ	NA
4-Methylphenol	41,000								61 U	65 U	58 U		40 U	38 U	39 U	38 U	37 U	36 U	**14** J1	37 U	38 U	NA
2,4-Dimethylphenol	95,000								61 U	65 U	58 U		40 U	38 U	39 U	38 U	37 UJ	36 U	38 U	37 U	38 U	NA
Benzoic Acid	9,000								610 UJ	650 UJ	580 U		400 U	380 U	390 U	380 U	370 U	360 U	380 U	370 U	380 U	NA
Naphthalene	2,100								61 U	65 U	58 U		**89**	19 U	20 U	19 U	**13** J1	**27**	**17** J1	19 U	19 U	NA
2-Methylnaphthalene	320,000								61 U	65 U	58 U		**140**	19 U	20 U	19 U	**10** J1	**48**	19 U	19 U	19 U	NA
Acenaphthylene	---								61 U	65 U	58 U		20 U	19 U	20 U	19 U	18 U	18 U	19 U	19 U	19 U	NA
Acenaphthene	230,000								61 U	65 U	58 U		20 U	19 U	20 U	19 U	18 U	18 U	19 U	19 U	19 U	NA
Dibenzofuran	80,000								61 U	65 U	58 U		20 U	19 U	20 U	19 U	18 U	**15** J1	19 U	19 U	19 U	NA
Fluorene	150,000								61 U	65 U	58 U		20 U	19 U	20 U	19 U	18 U	18 U	19 U	19 U	19 U	NA
Phenanthrene	---								61 U	65 U	58 U		**110**	**10** J1	20 U	19 U	**16** J1	**47**	**14** J1	19 U	19 U	NA
Carbazole	50,000								61 U	65 U	58 U		20 UJ	19 UJ	20 UJ	19 UJ	18 U	18 U	19 U	19 U	19 U	NA
Anthracene	1,600,000								61 U	65 U	58 U		20 U	19 U	20 U	19 U	18 U	18 U	19 U	19 U	19 U	NA
Di-n-Butylphthalate	26,000								61 U	65 U	58 U		20 U	19 U	20 U	19 U	18 U	18 U	19 U	19 U	19 U	NA
Fluoranthene	230,000								61 U	65 U	58 U		**49**	19 U	20 U	19 U	18 U	**20**	**14** J1	19 U	**22**	NA
Pyrene	240,000								61 U	65 U	58 U		**120**	19 U	20 U	19 U	18 U	**19**	**17** J1	19 U	**17** J1	NA
Benzo(a)anthracene	---								61 U	65 U	58 U		**12** J1	19 U	20 U	19 U	18 U	**14** J1	**12** J1	19 U	19 U	NA
bis(2-Ethylhexyl)phthalate	56,600								61 U	65 U	58 U		25 U	24 U	24 U	24 U	24 U	23 U	21 UJ2	42 U	26 U	NA
Chrysene	---								61 U	65 U	58 U		**72**	19 U	20 U	19 U	**20**	**21**	**15** J1	19 U	19 U	NA
Benzo(a)pyrene	---								61 U	65 U	58 U		20 U	19 U	20 U	19 U	18 U	**13** J1	**15** J1	19 U	19 U	NA
Indeno(1,2,3-cd)pyrene	---								61 U	65 U	58 U		**19** J1	19 U	20 U	19 U	18 U	18 U	19 U	19 U	19 U	NA
Dibenz(a,h)anthracene	---								61 U	65 U	58 U		20 U	19 U	20 U	19 U	18 U	18 U	19 U	19 U	19 U	NA
Benzo(g,h,i)perylene	---								61 U	65 U	58 U		**27**	19 U	20 U	19 U	18 U	18 U	**12** J1	19 U	19 U	NA
1-Methylnaphthalene	16,000								61 U	65 U	58 U		**34**	19 U	20 U	19 U	18 U	**38**	19 U	19 U	19 U	NA
Total Benzofluoranthenes	---												**78**	19 U	20 U	19 U	**12** J1	**17** J1	**21**	19 U	19 U	NA
cPAH TEQ	15								ND	ND	ND		**12** J	ND	ND	ND	**1.4** J	**16** J	**18** J	ND	ND	NA

TABLE Q-2
SOIL ANALYTICAL DETECTS
NORTH OF FORMER SLIP 5 AREA
BOEING ISAACSON-THOMPSON
REMEDIAL INVESTIGATION

		Western Property Boundary (West of Stabilized Soil Area)																				
	Preliminary Cleanup Levels	I-4 (3) 10/20/1983	PBI-1 (2) PI24A 7/27/2009	PBI-1 (5) PI24B 7/27/2009	PBI-1 (8) PI24C 7/27/2009	PBI-2 (2) PI24D 7/27/2009	PBI-2A (5) PI24E 7/27/2009	PBI-2A (8) PI24F 7/27/2009	IDP-6 (8) OK85AB 2/2/2009	IDP-6 (12) OK85AC 2/2/2009	IDP-6A (3) OL03J 2/3/2009	IDP-7 (3) OL03A 2/3/2009	IT-MW-20(2-3.5) TW35G 11/09/2011	IT-MW-20(5-6.5) TW35H 11/09/2011	IT-MW-20(8-9.5) TW35I 11/09/2011	IT-MW-20(14.5-16) TW35J 11/09/2011	IT-MW-21(2-3.5) TW89D 11/11/2011	IT-MW-21(5-6.5) TW89E 11/11/2011	IT-MW-21(8-9.5) TW89F 11/11/2011	IT-MW-21(13.5-15) TW89G 11/11/2011	IT-MW-21(17-18.5) TW89H 11/11/2011	IT-MW-21(24.5-26) TW89M 11/11/2011
PAHs (µg/kg)																						
Method SW8270D-SIM																						
Naphthalene	2,100												100	3.5 J1	4.0 U	4.9 U	8.0	35	13	4.6 U	4.5 U	NA
2-Methylnaphthalene	320,000												220	3.2 J1	4.0 U	4.9 U	8.9	57	4.9	4.6 U	4.5 U	NA
1-Methylnaphthalene	16,000												230	3.5 J1	4.0 U	4.9 U	6.3	61	4.3 J1	4.6 U	4.5 U	NA
Total Naphthalenes	---												550	10.2 J1	4.0 U	4.9 U	23.2	153	22.2 J1	4.6 U	4.5 U	NA
Acenaphthylene	---												4.9 U	4.8 U	4.0 U	4.9 U	4.5 U	4.4 U	4.6 U	4.6 U	4.5 U	NA
Acenaphthene	230,000												4.9 U	4.8 U	4.0 U	4.9 U	4.5 U	4.4 U	4.6 U	4.6 U	4.5 U	NA
Fluorene	150,000												4.9 U	4.8 U	4.0 U	4.9 U	4.5 U	3.8 J1	4.6 U	4.6 U	4.5 U	NA
Phenanthrene	---												140	6.6	3.3 J1	4.9 U	10	85	14	4.6 U	4.5 U	NA
Anthracene	1,600,000												4.9 U	4.8 U	4.0 U	4.9 U	4.5 U	12	4.6 U	4.6 U	4.5 U	NA
Fluoranthene	230,000												58	4.8	4.0 U	4.9 U	8.5	32	7.8	4.6 U	4.5 U	NA
Pyrene	240,000												88	3.1 J1	4.0 U	4.9 U	9.8	27	7.0	4.6 U	4.5 U	NA
Benzo(a)anthracene	---												14	4.8 U	4.0 U	4.9 U	6.3	14	4.0 J1	4.6 U	4.5 U	NA
Chrysene	---												55	3.8 J1	4.0 U	4.9 U	16	26	7.3	4.6 U	4.5 U	NA
Benzo(a)pyrene	---												14	4.8 U	4.0 U	4.9 U	8.2	20	6.2	4.6 U	4.5 U	NA
Indeno(1,2,3-cd)pyrene	---												16	4.8 U	4.0 U	4.9 U	6.5	6.9	3.6 J1	4.6 U	4.5 U	NA
Dibenz(a,h)anthracene	---												5.7	4.8 U	4.0 U	4.9 U	2.8 J1	3.4 J1	4.6 U	4.6 U	4.5 U	NA
Benzo(g,h,i)perylene	---												21	4.6 J1	4.0 U	4.9 U	10	10	6.0	4.6 U	4.5 U	NA
Dibenzofuran	80,000												4.9 U	4.8 U	4.0 U	4.9 U	2.5 J1	24	3.2 J1	4.6 U	4.5 U	NA
Total Benzofluoranthenes	---												65	3.4 J1	4.0 U	4.9 U	15	17	10	4.6 U	4.5 U	NA
cPAH TEQ	15												24.62	0.4 J	ND	ND	11.42 J	24.39 J	8.0 J	ND	ND	NA
PCBs (µg/kg)																						
Method SW8082																						
Aroclor 1254	0.29								32 U	31 U	31 U		32 U	33 U	32 UJ	32 U	32 U	32 U	33 U	31 U	32 U	NA
Aroclor 1260	5.4								32 U	31 U	31 U		32 U	33 U	32 UJ	32 U	32 U	32 U	33 U	31 U	32 U	NA
Total PCBs	1.8								ND	ND	ND		ND	ND	ND	ND	ND	ND	ND	ND	ND	NA
TOTAL PETROLEUM HYDROCARBONS (mg/kg)																						
NWTPH-HCID																						
Lube Oil	---											100 U										
NWTPH-Dx																						
Diesel-Range Organics	2,000												1400	6.2 U	6.8 U	6.4 U	21 J	18 J	6.4 U	5.8 U	5.6 U	NA
Oil-Range Organics	2,000												190	12 U	14 U	13 U	100	41	13 U	12 U	11 U	NA
NWTPH-G																						
Gasoline-Range Organics	100/30												22	10	11 U	7.5 U	7.7 U	8.2 U	8.2 U	7.6 U	6.4 U	8.2 U
TOTAL METALS (mg/kg)																						
Methods 200.8/7471A/SW7196A																						
Antimony	5												0.6	0.2 U	0.3 U	0.2 U	0.6	0.2 U	0.3 U	0.2 U	0.2 U	NA
Barium	640												324	60.5	67.1	31.7	67.3	52.0	66.3	28.7	23.3	NA
Beryllium	160												0.3	0.3	0.3	0.2 U	0.2 U	0.3	0.3 U	0.2 U	0.2 U	NA
Cadmium	1.3		1.3	0.7	1.1	9.1	0.8	2.1	0.3 U	0.2 U	0.2 U	4	13.5	0.1 U	0.1 U	0.1 U	2.1	0.3	0.2	0.1 U	0.1 U	NA
Chromium	1,480	16	561 J	299	486	652	54	117	19.2	9	52	262	594	17.2	17.1	11.8	100	15.1	15.4	10.2	10.6	NA
Chromium VI	3.8												0.462 U	0.491 U	0.528 U	0.486 U	0.461	0.458 U	0.517 U	0.490 U	0.500 U	NA
Copper	36	280	107 J	46	128	394	152	136	26.9	9.1	20.8	177 J	150	83.1	22.3	12.8	65.7	21.8	668	183	11.4	NA
Lead	250	150	141	86	113	1200	29	164	3	2 U	27	420	684	5.2	5.2	3.9	112	14.4	9.1	2.3	1.0	NA
Mercury	1.5		0.05	0.02 U	0.02 U	0.39	0.07	0.09	0.06	0.05 U	0.05 U	0.52 J	0.08	0.05	0.06	0.02 U	0.18	0.11	0.07	0.03	0.03 U	NA
Nickel	210												65.6	12.9	13.8	6.0	22.8	11.3	14.3	8.0	7.1	NA
Silver	170												1.6	0.2 U	0.3 U	0.2 U	0.2	0.2 U	0.3 U	0.2 U	0.2 U	NA
Zinc	1,400	430	380 J	190	270	3030	170	560	153	20	68	1390 J	2350	78	37	26	295	58	63	99	26	NA
CONVENTIONALS (mg/kg)																						
Oil and Grease	---																					
Total Organic Carbon	---																					

TABLE Q-2
SOIL ANALYTICAL DETECTS
NORTH OF FORMER SLIP 5 AREA
BOEING ISAACSON-THOMPSON
REMEDIAL INVESTIGATION

		South of Stabilized Soil Area															
	Preliminary Cleanup Levels	13 (9) 8/1/1983	13 (13.5) 8/1/1983	14 (2) 8/1/1983	IMR-5 NV07C 10/17/2008	IMR-7 NW45A 10/27/2008	IMR-13 NY11D 11/4/2008	IMR-14 NY11E 11/4/2008	IMR-16 NY11G 11/4/2008	IMR-18 OA02B 11/13/2008	IDP-8 (3) OL03B 2/3/2009	IDP-9 (3) OL03C 2/3/2009	IDP-10 (2) OL03D 2/3/2009	IT-MW-15(2-3.5) TX21A 11/15/2011	IT-MW-15(5-6.5) TX21B 11/15/2011	IT-MW-15(8-9.5) TX21C 11/15/2011	IT-MW-15(12.5-14) TX21D 11/15/2011
VOLATILES (µg/kg)																	
Method SW8260C																	
Chloromethane	1,600										0.6 U	1.3 U	0.8 U	1.3 UJ	1.4 UJ	1.4 UJ	1.4 UJ
Methylene Chloride	2,400										1.3 U	2.8	**1.7**	**2.7** J	**2.2** J, J1	**3.1** J	**2.0** J, J1
Acetone	510,000										**15**	**57**	**39**	**26** J	**51** J	**22** J	**19** J
Carbon Disulfide	75,000										0.6 U	1.3 U	0.8 U	1.3 U	1.4 U	1.4 U	1.4 U
2-Butanone	430,000										3.2 U	3.6 U	3.9 U	6.4 U	7.0 U	7.1 U	7.1 U
Trichloroethene	51										0.6 U	1.3 U	0.8 U	**0.9** J1	**1.8**	**1.6**	**1.2** J1
Benzene	93										0.6 U	**9.8**	0.8 U	1.3 U	1.4 U	1.4 U	1.4 U
Tetrachloroethene	260										0.6 U	1.3 U	0.8 U	1.3 U	1.4 U	1.4 U	1.4 U
Toluene	100,000										0.6 U	**17**	0.8 U	1.3 U	1.4 U	1.4 U	1.4 U
Ethylbenzene	230										0.6 U	1.3 U	0.8 U	1.3 U	1.4 U	1.4 U	1.4 U
Styrene	16,000,000										0.6 U	1.3 U	0.8 U	1.3 U	1.4 U	1.4 U	1.4 U
Trichlorofluoromethane	200,000										0.6 U	1.3 U	0.8 U	1.3 U	1.4 U	1.4 U	1.4 U
m,p-Xylene	160,000										0.6 U	**15**	0.8 U	1.3 U	1.4 U	1.4 U	1.4 U
o-Xylene	200,000										0.6 U	**7.7**	0.8 U	1.3 U	1.4 U	1.4 U	1.4 U
1,3-Dichlorobenzene	3,840										0.6 U	1.3 U	0.8 U	1.3 U	1.4 U	1.4 U	1.4 U
1,4-Dichlorobenzene	3,500										0.6 U	1.3 U	0.8 U	1.3 U	1.4 U	1.4 U	1.4 U
Methyl Iodide	---										0.6 U	1.3 U	0.8 U	1.3 U	1.4 U	1.4 U	1.4 U
1,3,5-Trimethylbenzene	800,000										0.6 U	1.3 U	0.8 U	1.3 U	1.4 U	1.4 U	1.4 U
1,2,4-Trimethylbenzene	800,000										0.6 U	1.3 U	0.8 U	1.3 U	1.4 U	1.4 U	1.4 U
Isopropylbenzene	78,000										0.6 U	1.3 U	0.8 U	1.3 U	1.4 U	1.4 U	1.4 U
n-Propylbenzene	11,000										0.6 U	1.3 U	0.8 U	1.3 U	1.4 U	1.4 U	1.4 U
4-Isopropyltoluene	---										0.6 U	1.3 U	0.8 U	1.3 U	1.4 U	1.4 U	1.4 U
n-Butylbenzene	27,000										0.6 U	1.3 U	0.8 U	1.3 U	1.4 U	1.4 U	1.4 U
Naphthalene	2,100										3.2 U	6.6 U	3.9 U	6.4 U	7.0 U	7.1 U	7.1 U
SEMIVOLATILES (µg/kg)																	
Method SW8270D																	
Phenol	1,900,000										64 U	61 U		20 U	19 U	20 U	19 U
Benzyl Alcohol	8,000,000										64 U	61 U		20 U	19 U	20 U	19 U
4-Methylphenol	41,000										64 U	61 U		39 U	39 U	40 U	37 U
2,4-Dimethylphenol	95,000										64 U	61 U		39 U	39 U	40 U	37 U
Benzoic Acid	9,000										640 U	610 U		390 U	390 U	400 U	370 U
Naphthalene	2,100										64 U	61 U		20 U	19 U	20 U	19 U
2-Methylnaphthalene	320,000										64 U	61 U		20 U	19 U	20 U	19 U
Acenaphthylene	---										64 U	61 U		20 U	19 U	20 U	19 U
Acenaphthene	230,000										64 U	61 U		20 U	19 U	20 U	19 U
Dibenzofuran	80,000										64 U	61 U		20 U	19 U	20 U	19 U
Fluorene	150,000										64 U	61 U		20 U	19 U	20 U	19 U
Phenanthrene	---										64 U	61 U		20 U	19 U	20 U	19 U
Carbazole	50,000										64 U	61 U		20 U	19 U	20 U	19 U
Anthracene	1,600,000										64 U	61 U		20 U	19 U	20 U	19 U
Di-n-Butylphthalate	26,000										64 U	61 U		20 U	19 U	20 U	19 U
Fluoranthene	230,000										64 U	61 U		20 U	19 U	20 U	19 U
Pyrene	240,000										64 U	61 U		20 U	19 U	20 U	19 U
Benzo(a)anthracene	---										64 U	61 U		20 U	19 U	20 U	19 U
bis(2-Ethylhexyl)phthalate	56,600										64 U	61 U		130 U	**240**	180 U	23 U
Chrysene	---										64 U	61 U		20 U	19 U	20 U	19 U
Benzo(a)pyrene	---										64 U	61 U		20 U	19 U	20 U	19 U
Indeno(1,2,3-cd)pyrene	---										64 U	61 U		20 U	19 U	20 U	19 U
Dibenz(a,h)anthracene	---										64 U	61 U		20 U	19 U	20 U	19 U
Benzo(g,h,i)perylene	---										64 U	61 U		20 U	19 U	20 U	19 U
1-Methylnaphthalene	16,000										64 U	61 U		20 U	19 U	20 U	19 U
Total Benzofluoranthenes	---													20 U	19 U	20 U	19 U
cPAH TEQ	15										ND	ND		ND	ND	ND	ND

TABLE Q-2
SOIL ANALYTICAL DETECTS
NORTH OF FORMER SLIP 5 AREA
BOEING ISAACSON-THOMPSON
REMEDIAL INVESTIGATION

		South of Stabilized Soil Area															
	Preliminary Cleanup Levels	13 (9) 8/1/1983	13 (13.5) 8/1/1983	14 (2) 8/1/1983	IMR-5 NV07C 10/17/2008	IMR-7 NW45A 10/27/2008	IMR-13 NY11D 11/4/2008	IMR-14 NY11E 11/4/2008	IMR-16 NY11G 11/4/2008	IMR-18 OA02B 11/13/2008	IDP-8 (3) OL03B 2/3/2009	IDP-9 (3) OL03C 2/3/2009	IDP-10 (2) OL03D 2/3/2009	IT-MW-15(2-3.5) TX21A 11/15/2011	IT-MW-15(5-6.5) TX21B 11/15/2011	IT-MW-15(8-9.5) TX21C 11/15/2011	IT-MW-15(12.5-14) TX21D 11/15/2011
PAHs (µg/kg)																	
Method SW8270D-SIM																	
Naphthalene	2,100													**2.8** J1	4.9 U	4.7 U	**5.0**
2-Methylnaphthalene	320,000													4.9 U	4.9 U	4.7 U	**2.5** J1
1-Methylnaphthalene	16,000													4.9 U	4.9 U	4.7 U	**2.5** J1
Total Naphthalenes	---													**2.8** J1	4.9 U	4.7 U	**10.0** J1
Acenaphthylene	---													4.9 U	4.9 U	4.7 U	4.7 U
Acenaphthene	230,000													**2.6** J1	4.9 U	4.7 U	4.7 U
Fluorene	150,000													4.9 U	4.9 U	4.7 U	4.7 U
Phenanthrene	---													**22**	**5.5**	**2.7** J1	**3.9** J1
Anthracene	1,600,000													**4.4** J1	4.9 U	4.7 U	4.7 U
Fluoranthene	230,000													**20**	**4.7** J1	4.7 U	4.7 U
Pyrene	240,000													**23**	**4.4** J1	4.7 U	4.7 U
Benzo(a)anthracene	---													**10**	**2.5** J1	4.7 U	4.7 U
Chrysene	---													**12**	**3.3** J1	4.7 U	4.7 U
Benzo(a)pyrene	---													**12**	**2.6** J1	4.7 U	4.7 U
Indeno(1,2,3-cd)pyrene	---													**7.4**	4.9 U	4.7 U	4.7 U
Dibenz(a,h)anthracene	---													**3.3** J1	4.9 U	4.7 U	4.7 U
Benzo(g,h,i)perylene	---													**8.6**	4.9 U	4.7 U	4.7 U
Dibenzofuran	80,000													4.9 U	4.9 U	4.7 U	4.7 U
Total Benzofluoranthenes	---													**17**	4.9 U	4.7 U	4.7 U
cPAH TEQ	15													**16**	**2.9** J	ND	ND
PCBs (µg/kg)																	
Method SW8082																	
Aroclor 1254	0.29										32 U	32 U		32 U	32 U	31 U	33 U
Aroclor 1260	5.4										32 U	32 U		32 U	32 U	31 U	33 U
Total PCBs	1.8										ND	ND		ND	ND	ND	ND
TOTAL PETROLEUM HYDROCARBONS (mg/kg)																	
NWTPH-HCID																	
Lube Oil	---										100 U	100 U	**100**				
NWTPH-Dx																	
Diesel-Range Organics	2,000													6.0 U	6.4 U	5.3 U	6.6 U
Oil-Range Organics	2,000													12 U	13 U	11 U	13 U
NWTPH-G																	
Gasoline-Range Organics	100/30													8.1 U	7.0 U	7.4 U	8.7 U
TOTAL METALS (mg/kg)																	
Methods 200.8/7471A/SW7196A																	
Antimony	5													0.2 UJ	0.2 U	0.2 U	0.3 U
Barium	640			**33**	**61.5**	**31.4**	**75.1**	**157**	**253**	**40.8**				**51.0**	**44.2**	**33.6**	**50.9**
Beryllium	160													0.2 U	0.2 U	0.2 U	0.3 U
Cadmium	1.3			**0.78**	**0.6**	0.2 U	**1.3**	**1.9**	**15**	**1.5**	**0.4**	**0.6**	**0.6**	0.1 U	0.1 U	0.1 U	0.1 U
Chromium	1,480			**16**	**41.2**	**21.3**	**52**	**109**	**536**	**14.6**	**36.9**	**58**	**16.2**	**15.0**	**12.2**	**8.6**	**12.4**
Chromium VI	3.8													0.475 U	0.500 U	0.423 U	0.533 U
Copper	36										**27.4**	**93.2**	**55.6**	**15.7**	**17.2**	**11.0**	**20.2**
Lead	250			**69**	**56**	2 U	**86**	**273**	**1210**	**24**	**27**	**112**	**59**	**17.1** J	**3.4**	**17.4**	**2.5**
Mercury	1.5			**0.03**	**0.1**	0.05 U	**0.21**	**0.33**	**0.06**	**0.16**	**0.08**	**0.18**	**0.15**	**0.11**	**0.07**	0.02 U	**0.03**
Nickel	210			**14**										**15.5**	**10.8**	**7.9**	**9.5**
Silver	170			0.3 U	0.3 U	0.3 U	0.3 U	0.9 U	**2**	0.3 U				0.2 U	0.2 U	0.2 U	0.3 U
Zinc	1,400	**25**	**102.5**	**73.9**							**89**	**267**	**220**	**51**	**27**	**29**	**27**
CONVENTIONALS (mg/kg)																	
Oil and Grease	---	**110**	**53**	**210**													
Total Organic Carbon	---																

TABLE Q-2
SOIL ANALYTICAL DETECTS
NORTH OF FORMER SLIP 5 AREA
BOEING ISAACSON-THOMPSON
REMEDIAL INVESTIGATION

		South of Stabilized Soil Area								Stabilized Soil Area													
	Preliminary Cleanup Levels	IT-MW-16(2-3.5) TW45L 11/10/2011	IT-MW-16(5-6.5) TW45M 11/10/2011	IT-MW-16(8-9.5) TW45N 11/10/2011	IT-MW-16(12-13.5) TW45O 11/10/2011	IT-MW-18(2-3.5) TW27A 11/08/2011	IT-MW-18(5-6.5) TW27B 11/08/2011	IT-MW-18(8-9.5) TW27D 11/08/2011	IT-MW-18(11.5-13) TW27C 11/08/2011	IMR-2 NV07A 10/17/2008	IMR-4 NV07B 10/17/2008	IMR-6 NV07D 10/17/2008	IMR-8 NV07E 10/17/2008	IMR-10 NY11A 11/4/2008	IMR-11 NW45B 10/27/2008	IMR-11 NY11B 11/4/2008	IMR-12 NW45C 10/27/2008	IMR-12 NY11C 11/4/2008	IMR-15 NY11F 11/4/2008	IT-MW-23(11-12.5) TW35A 11/09/2011	IT-MW-23(12.5-14) TW35B 11/09/2011	IT-MW-24(12.5-14) TX01D 11/14/2011	IT-MW-24(14-15.5) TX01E 11/14/2011
VOLATILES (µg/kg)																							
Method SW8260C																							
Chloromethane	1,600	1.3 UJ	1.1 UJ	1.3 UJ	1.3 UJ	1.2 U	1.4 U	1.4 U	1.2 U											1.2 U	**1.2** J1	1.2 UJ	1.5 UJ
Methylene Chloride	2,400	**3.6**	**3.3**	**5.7**	**4.1**	**3.0**	2.8 U	2.7 U	2.5 U											**2.2** J, J1	**2.4** J1	**1.4** J, J1	**1.5** J, J1
Acetone	510,000	**37**	**30**	**38**	**23** J	**12** J	**22** J	**22** J	**23** J											**1600**	**370**	**420** J	**500** J
Carbon Disulfide	75,000	**1.7**	1.1 U	**3.8**	**1.8** J	**4.0**	**2.0**	**2.6**	**3.7**											**1.6**	**1.6**	1.2 U	**2.8**
2-Butanone	430,000	**3.2** J1	5.3 U	**5.0** J1	6.5 U	6.2 U	6.9 U	6.8 U	6.1 U											**130**	**82**	**32**	**46**
Trichloroethene	51	1.3 U	1.1 U	1.3 U	1.3 U	1.2 U	1.4 U	1.4 U	1.2 U											1.2 U	1.2 U	**2.1**	**1.7**
Benzene	93	**1.7**	**0.5** J1	**1.1** J1	**1.1** J1	1.2 U	1.4 U	1.4 U	1.2 U											**0.8** J1	**0.8** J1	**1.3**	1.5 U
Tetrachloroethene	260	1.3 U	1.1 U	1.3 U	1.3 U	1.2 U	1.4 U	1.4 U	1.2 U											1.2 U	1.2 U	1.2 U	1.5 U
Toluene	100,000	**0.9** J1	1.1 U	**0.9** J1	**0.6** J1	1.2 U	1.4 U	1.4 U	1.2 U											**1.0** J1	**1.1** J1	**0.8** J1	1.5 U
Ethylbenzene	230	1.3 U	1.1 U	1.3 U	1.3 U	1.2 U	1.4 U	1.4 U	1.2 U											1.2 U	1.2 U	1.2 U	1.5 U
Styrene	16,000,000	1.3 U	1.1 U	1.3 U	1.3 U	1.2 U	1.4 U	1.4 U	1.2 U											1.2 U	1.2 U	1.2 U	1.5 U
Trichlorofluoromethane	200,000	1.3 U	1.1 U	1.3 U	1.3 U	1.2 U	1.4 U	1.4 U	1.2 U											1.2 U	1.2 U	**2.1** J	**0.8** J, J1
m,p-Xylene	160,000	1.3 U	1.1 U	1.3 U	1.3 U	1.2 U	1.4 U	1.4 U	1.2 U											1.2 U	1.2 U	1.2 U	1.5 U
o-Xylene	200,000	1.3 U	1.1 U	1.3 U	1.3 U	1.2 U	1.4 U	1.4 U	1.2 U											1.2 U	1.2 U	1.2 U	1.5 U
1,3-Dichlorobenzene	3,840	1.3 U	1.1 U	1.3 U	1.3 U	1.2 U	1.4 U	1.4 U	1.2 U											1.2 U	1.2 U	1.2 U	1.5 U
1,4-Dichlorobenzene	3,500	1.3 U	1.1 U	1.3 U	1.3 UJ	1.2 U	1.4 U	1.4 U	1.2 U											1.2 U	1.2 U	1.2 U	1.5 U
Methyl Iodide	---	1.3 U	1.1 U	1.3 U	1.3 U	1.2 U	1.4 U	1.4 U	1.2 U											1.2 U	1.2 U	1.2 U	1.5 U
1,3,5-Trimethylbenzene	800,000	1.3 U	1.1 U	1.3 U	1.3 U	1.2 U	1.4 U	1.4 U	1.2 U											**0.7** J1	**0.7** J1	1.2 U	1.5 U
1,2,4-Trimethylbenzene	800,000	1.3 U	1.1 U	1.3 U	1.3 U	1.2 U	1.4 U	1.4 U	1.2 U											**1.1** J1	**1.0** J1	1.2 U	1.5 U
Isopropylbenzene	78,000	1.3 U	1.1 U	1.3 U	1.3 U	1.2 U	1.4 U	1.4 U	1.2 U											1.2 U	1.2 U	1.2 U	1.5 U
n-Propylbenzene	11,000	1.3 U	1.1 U	1.3 U	1.3 U	1.2 U	1.4 U	1.4 U	1.2 U											1.2 U	1.2 U	1.2 U	1.5 U
4-Isopropyltoluene	---	1.3 U	1.1 U	1.3 U	1.3 U	1.2 U	1.4 U	1.4 U	1.2 U											**1.9** J	**2.9** J	1.2 U	1.5 U
n-Butylbenzene	27,000	1.3 U	1.1 U	1.3 U	1.3 U	1.2 U	1.4 U	1.4 U	1.2 U											1.2 U	1.2 U	1.2 U	1.5 U
Naphthalene	2,100	6.3 U	5.3 U	6.5 U	6.5 U	6.2 U	6.9 U	6.8 U	6.1 U											6.1 U	6.1 U	6.1 U	7.3 U
SEMIVOLATILES (µg/kg)																							
Method SW8270D																							
Phenol	1,900,000	19 U	18 U	19 U	19 U	20 U	19 U	**10** J1	**11** J1											**28**	**210**	20 U	**160**
Benzyl Alcohol	8,000,000	19 U	18 U	19 U	19 U	20 U	**18** J1	**25**	20 U											19 U	19 U	20 U	18 U
4-Methylphenol	41,000	39 U	37 U	38 U	38 U	39 U	**45**	**43**	40 U											**20** J1	**81**	40 U	36 U
2,4-Dimethylphenol	95,000	39 U	37 U	38 U	38 U	39 U	**16** J1	38 U	40 U											38 U	39 U	40 U	36 U
Benzoic Acid	9,000	390 U	370 U	380 U	380 U	390 U	**140** J1	380 U	400 U											380 U	390 U	400 U	360 U
Naphthalene	2,100	19 U	18 U	19 U	19 U	20 U	**66**	**55**	**13** J1											19 U	19 U	20 U	18 U
2-Methylnaphthalene	320,000	19 U	18 U	19 U	19 U	**9.8** J1	**57**	**36**	20 U											19 U	19 U	20 U	18 U
Acenaphthylene	---	19 U	18 U	19 U	19 U	20 U	**15** J1	**13** J1	20 U											19 U	19 U	20 U	18 U
Acenaphthene	230,000	19 U	18 U	19 U	19 U	20 U	**18** J1	**14** J1	20 U											19 U	19 U	20 U	18 U
Dibenzofuran	80,000	19 U	18 U	19 U	19 U	20 U	**38**	**25**	20 U											19 U	19 U	20 U	18 U
Fluorene	150,000	19 U	18 U	19 U	19 U	20 U	**23**	**30**	20 U											19 U	19 U	20 U	18 U
Phenanthrene	---	**88**	18 U	**26**	19 U	**18** J1	**86**	**85**	**11** J1											19 U	19 U	20 U	18 U
Carbazole	50,000	19 U	18 U	19 U	19 U	20 U	19 U	19 U	20 U											19 UJ	19 UJ	20 U	18 U
Anthracene	1,600,000	**19**	18 U	19 U	19 U	20 U	**16** J1	**14** J1	20 U											19 U	19 U	20 U	18 U
Di-n-Butylphthalate	26,000	19 U	18 U	19 U	19 U	20 U	19 U	19 U	20 U											19 U	19 U	20 U	18 U
Fluoranthene	230,000	**110**	18 U	**26**	19 U	20 U	**79**	**80**	20 U											19 U	19 U	20 U	18 U
Pyrene	240,000	**160** J	18 U	**37** J	19 U	**14** J1	**68**	**58**	20 U											19 U	19 U	20 U	18 U
Benzo(a)anthracene	---	**80**	18 U	**19**	19 U	20 U	**21**	**13** J1	20 U											19 U	19 U	20 U	18 U
bis(2-Ethylhexyl)phthalate	56,600	34 U	32 U	67 U	43 U	**22** J1	**29**	**32**	**17** J1											23 U	37 U	**17** J1	**24**
Chrysene	---	**98**	18 U	**32**	19 U	**27**	**29**	**21**	20 U											19 U	19 U	20 U	18 U
Benzo(a)pyrene	---	**110**	18 U	**25**	19 U	20 U	19 U	19 U	20 U											19 U	19 U	20 U	18 U
Indeno(1,2,3-cd)pyrene	---	**50**	18 U	**13** J1	19 U	20 U	19 U	19 U	20 U											19 U	19 U	20 U	18 U
Dibenz(a,h)anthracene	---	**13** J1	18 U	19 U	19 U	20 U	19 U	19 U	20 U											19 U	19 U	20 U	18 U
Benzo(g,h,i)perylene	---	**54**	18 U	**21**	19 U	**13** J1	19 U	19 U	20 U											19 U	19 U	20 U	18 U
1-Methylnaphthalene	16,000	19 U	18 U	19 U	19 U	20 U	**52**	**32**	20 U											19 U	19 U	20 U	18 U
Total Benzofluoranthenes	---	**130**	18 U	**33**	19 U	**17** J1	**34**	**33**	20 U											19 U	19 U	20 U	18 U
cPAH TEQ	15	**138.28** J	ND	**31.82** J	ND	**2.0** J	**5.8**	**4.8** J	ND											ND	ND	ND	ND

TABLE Q-2
SOIL ANALYTICAL DETECTS
NORTH OF FORMER SLIP 5 AREA
BOEING ISAACSON-THOMPSON
REMEDIAL INVESTIGATION

		South of Stabilized Soil Area								Stabilized Soil Area													
	Preliminary Cleanup Levels	IT-MW-16(2-3.5) TW45L 11/10/2011	IT-MW-16(5-6.5) TW45M 11/10/2011	IT-MW-16(8-9.5) TW45N 11/10/2011	IT-MW-16(12-13.5) TW45O 11/10/2011	IT-MW-18(2-3.5) TW27A 11/08/2011	IT-MW-18(5-6.5) TW27B 11/08/2011	IT-MW-18(8-9.5) TW27D 11/08/2011	IT-MW-18(11.5-13) TW27C 11/08/2011	IMR-2 NV07A 10/17/2008	IMR-4 NV07B 10/17/2008	IMR-6 NV07D 10/17/2008	IMR-8 NV07E 10/17/2008	IMR-10 NY11A 11/4/2008	IMR-11 NW45B 10/27/2008	IMR-11 NY11B 11/4/2008	IMR-12 NW45C 10/27/2008	IMR-12 NY11C 11/4/2008	IMR-15 NY11F 11/4/2008	IT-MW-23(11-12.5) TW35A 11/09/2011	IT-MW-23(12.5-14) TW35B 11/09/2011	IT-MW-24(12.5-14) TX01D 11/14/2011	IT-MW-24(14-15.5) TX01E 11/14/2011
PAHs (µg/kg)																							
Method SW8270D-SIM																							
Naphthalene	2,100	5.7	4.7 U	5.8	2.7 J1	6.5	71	30	3.6 J1											2.9 J1	3.2 J1	9.0	4.2 J1
2-Methylnaphthalene	320,000	4.0 J1	4.7 U	4.7	4.8 U	10	51	17	5.0 U											3.6 J1	3.0 J1	9.6	5.9
1-Methylnaphthalene	16,000	4.4 J1	2.6 J1	4.0 J1	4.8 U	8.9	59	18	5.0 U											7.9	4.9	7.9	4.5
Total Naphthalenes	---	14.1 J1	2.6 J1	14.5 J1	2.7 J1	25.4	181	65	3.6 J1											14.4 J1	11.1 J1	26.5	14.6 J1
Acenaphthylene	---	4.0 J1	4.7 U	2.8 J1	4.8 U	4.9 U	20	4.8 U	5.0 U											4.6 U	4.9 U	5.0 U	4.4 U
Acenaphthene	230,000	4.6 U	4.7 U	4.0 J1	4.8 U	4.9 U	34	16	5.0 U											4.6 U	4.9 U	5.0 U	4.4 U
Fluorene	150,000	2.7 J1	4.7 U	3.2 J1	4.8 U	4.9 U	24	12	5.0 U											4.6 U	4.9 U	5.0 U	4.4 U
Phenanthrene	---	32	6.1	36	3.5 J1	19	100	51	8.1											4.4 J1	5.2	22	8.7
Anthracene	1,600,000	7.1	4.7 U	5.5	4.8 U	4.9 U	13	9.0	5.0 U											4.6 U	4.9 U	3.0 J1	4.4 U
Fluoranthene	230,000	53	51	39	3.0 J1	9.2	59	41	5.1											4.6 U	2.9 J1	14	5.2
Pyrene	240,000	60	170	44	3.4 J1	11	48	34	5.0											4.6 U	3.1 J1	16	6.3
Benzo(a)anthracene	---	33	120	22	4.8 U	6.0	13	9.8	5.0 U											4.6 U	4.9 U	6.6	2.7 J1
Chrysene	---	45	140	40	4.8 U	25	19	14	2.9 J1											4.6 U	4.9 U	14	5.6
Benzo(a)pyrene	---	51	250	33	3.4 J1	7.4	24	12	5.0 U											4.6 U	4.9 U	12	4.0 J1
Indeno(1,2,3-cd)pyrene	---	31	100	16	4.8 U	7.6	6.4	4.5 J1	5.0 U											4.6 U	4.9 U	5.2	4.4 U
Dibenz(a,h)anthracene	---	11	37	6.7	4.8 U	6.5	4.7 U	2.7 J1	5.0 U											4.6 U	4.9 U	2.9 J1	4.4 U
Benzo(g,h,i)perylene	---	36	110	26	4.8 U	12	10	7.9	5.0 U											4.6 U	4.9 U	8.9	3.6 J1
Dibenzofuran	80,000	2.5 J1	4.7 U	3.0 J1	4.8 U	2.5 J1	29	15	2.8 J1											4.6 U	4.9 U	4.3 J1	4.4 U
Total Benzofluoranthenes	---	64	260	43	4.8 U	13	17	19	5.0 U											4.6 U	4.9 U	13	7.5
cPAH TEQ	15	65	303	42 J	3.4 J	11 J	27.8	16	0.03 J											ND	ND	15 J	5.1 J
PCBs (µg/kg)																							
Method SW8082																							
Aroclor 1254	0.29	30 U	32 U	30 U	30 U	32 U	33 U	31 U	33 U											33 U	31 U	32 U	32 U
Aroclor 1260	5.4	30 U	32 U	30 U	30 U	32 U	33 U	29 J1	33 U											33 U	31 U	32 U	32 U
Total PCBs	1.8	ND	ND	ND	ND	ND	ND	29 J	ND											ND	ND	ND	ND
TOTAL PETROLEUM HYDROCARBONS (mg/kg)																							
NWTPH-HCID																							
Lube Oil	---																						
NWTPH-Dx																							
Diesel-Range Organics	2,000	12	5.3 U	14	6.1 U	26	27	32	6.8 U			17								6.6 U	6.2 U	30	6.0 U
Oil-Range Organics	2,000	47	12	57	12 U	110	34	41	20			61								13 U	15	45	12 U
NWTPH-G																							
Gasoline-Range Organics	100/30	7.5 U	7.6 U	6.9 U	7.9 U	6.4 U	9.2 U	8.7 U	8.5 U											8.3 U	7.6 U	7.5 U	8.1 U
TOTAL METALS (mg/kg)																							
Methods 200.8/7471A/SW7196A																							
Antimony	5	0.2 U	0.2 U	0.2 U	0.2 UJ	0.2 UJ	0.2 U	0.3 U	0.3 U											0.2 UJ	0.3 U	0.3	0.2 U
Barium	640	55.0	34.9	43.7	27.6	44.3 J	52.8	59.7	70.7	48	153	78.6	57.8	30.1	85	46.6	93	61.4	84.2	50.7 J	27.9	56.5	39.1
Beryllium	160	0.2 U	0.2 U	0.2 U	0.2 U	0.2 U	0.4	0.3	0.3											0.2 U	0.3 U	0.3	0.2 U
Cadmium	1.3	0.2	0.1 U	0.2	0.1 U	0.1 U	0.4	0.5	0.2	0.2 U	3.1	5.6	1	0.3	1.4	1.6	3.1	1.6	3	0.1 U	0.1 U	0.3	0.1 U
Chromium	1,480	18.7	12.1	20.5	9.6	53.3 J	15.3	16.8	16.1	19.5	55	19.7	26.4	24.4	38.6	22.9	116	25.1	19.5	13.2	11.6	16.6	9.9
Chromium VI	3.8	0.458 U	0.457 U	0.463 U	0.482 U	0.419 UJ	0.528 U	0.520 U	0.543 U											0.521	0.517 U	0.511 U	0.484 U
Copper	36	70.1	21.2	44.4	11.9	15.7 J	20.9	30.8	25.9											180	514	226	322
Lead	250	33.3	7.7	33.5	1.4	7.6	6.4	7.6	4.9	2 U	136	26	44	2 U	114	40	46	36	51	2.2 J	2.2	18.0	3.6
Mercury	1.5	0.15	0.03 U	0.10	0.03 U	0.02 U	0.06	0.06	0.06	0.04 U	0.46	0.68	0.81	0.04 U	1.82	1.12	0.7	0.12	0.8	0.21 J	0.15	1.14	0.54
Nickel	210	14.0	9.4	15.4	8.2	10.7	14.6	15.4	14.2											10.1	8.3	13.6	8.8
Silver	170	0.2 U	0.2 U	0.2 U	0.2 U	0.2 U	0.2 U	0.3 U	0.3 U	0.3 U	0.9 U	0.4 U	0.3 U	0.3 U	0.3 U	0.3 U	1 U	0.4 U	0.4 U	0.2 U	0.3 U	0.3 U	0.2 U
Zinc	1,400	129	31	75	45	41	46	57	37											44	98	127	95
CONVENTIONALS (mg/kg)																							
Oil and Grease	---																						
Total Organic Carbon	---																						

TABLE Q-2
SOIL ANALYTICAL DETECTS
NORTH OF FORMER SLIP 5 AREA
BOEING ISAACSON-THOMPSON
REMEDIAL INVESTIGATION

		Former Sump/Northeast Property Corner			Former Paint Storage Area												
	Preliminary Cleanup Levels	IssacEx-01 (5) KH07A 11/30/2006	IssacEx-02 (1.5) KH07B 11/30/2006	IssacEx-03 (2) KH07C 11/30/2006	2 (2.5) 8/1/1983	IT-SB-9(2-3.5) TX02E 11/14/2011	IT-SB-9(5-6.5) TX02F 11/14/2011	IT-SB-9(8-8.5) TX02G 11/14/2011	IT-SB-9(14-15.5) TX02H 11/14/2011	IT-SB-10(2-3.5) TU90P 11/01/2011	IT-SB-10(5-6.5) TU90Q 11/01/2011	IT-SB-10(8-9.5) TU90T 11/01/2011	IT-SB-10(13.5-15) TU90S 11/01/2011	IT-SB-11(2-3.5) TX02A 11/14/2011	IT-SB-11(5-6.5) TX02B 11/14/2011	IT-SB-11(8-9) TX02C 11/14/2011	IT-SB-11(14-15.5) TX02D 11/14/2011
VOLATILES (µg/kg)																	
Method SW8260C																	
Chloromethane	1,600	0.8 U	0.6 U	0.6 U		1.3 U	1.3 U	1.3 U	1.5 U	1.4 UJ	1.1 UJ	1.5 UJ	1.6 UJ	1.1 U	1.2 U	1.2 U	1.2 U
Methylene Chloride	2,400	1.6 U	1.2 U	1.3 U		2.5 U	**1.1** J1	**1.6** J1	**1.4** J1	**1.6** J, J1	**2.2** J, J1	**2.2** J, J1	**2.1** J, J1	**0.9** J1	**1.0** J1	**1.3** J1	**0.9** J1
Acetone	510,000	**26**	**16**	**18**		**43** J	**58** J	**30** J	**28** J	**43** J	**23** J	**21** J	**27** J	**40** J	**52** J	**22** J	**9.0** J
Carbon Disulfide	75,000	0.8 U	0.6 U	0.6 U		1.3 U	1.3 U	1.3 U	**2.8**	1.4 U	1.1 U	1.5 U	1.6 U	**0.8** J1	**2.8**	1.2 U	1.2 U
2-Butanone	430,000	4 U	3 U	3.2 U		6.4 U	**3.7** J1	6.4 U	7.3 U	7.2 U	**3.3** J1	7.3 U	8.0 U	**3.1** J1	**8.7**	6.2 U	5.9 U
Trichloroethene	51	0.8 U	0.6 U	0.6 U		**0.6** J1	**1.3**	**2.1**	**1.5**	1.4 U	1.1 U	1.5 U	1.6 U	**1.0** J1	**1.5**	**1.9**	**1.2**
Benzene	93	0.8 U	0.6 U	0.6 U		1.3 U	**0.7** J1	1.3 U	1.5 U	1.4 U	1.1 U	1.5 U	1.6 U	**0.7** J1	**1.5**	1.2 U	**0.7** J1
Tetrachloroethene	260	0.8 U	0.6 U	0.6 U		1.3 U	1.3 U	1.3 U	1.5 U	1.4 U	1.1 U	1.5 U	1.6 U	1.1 U	1.2 U	1.2 U	1.2 U
Toluene	100,000	0.8 U	0.6 U	0.6 U		1.3 U	1.3 U	1.3 U	1.5 U	1.4 U	1.1 U	1.5 U	1.6 U	1.1 U	**2.1**	1.2 U	1.2 U
Ethylbenzene	230	0.8 U	0.6 U	0.6 U		1.3 U	1.3 U	1.3 U	1.5 U	1.4 U	1.1 U	1.5 U	1.6 U	1.1 U	**1.1** J1	1.2 U	1.2 U
Styrene	16,000,000	0.8 U	0.6 U	0.6 U		1.3 U	1.3 U	1.3 U	1.5 U	1.4 U	1.1 U	1.5 U	1.6 U	1.1 U	1.2 U	1.2 U	1.2 U
Trichlorofluoromethane	200,000	0.8 U	0.6 U	0.6 U		**1.0** J1	**0.8** J1	**1.7**	1.5 U	1.4 U	1.1 U	1.5 U	1.6 U	**1.0** J1	**0.7** J1	**0.8** J1	**0.8** J1
m,p-Xylene	160,000	0.8 U	0.6 U	0.6 U		1.3 U	1.3 U	1.3 U	1.5 U	1.4 U	1.1 U	1.5 U	1.6 U	1.1 U	**5.0**	1.2 U	1.2 U
o-Xylene	200,000	0.8 U	0.6 U	0.6 U		1.3 U	1.3 U	1.3 U	1.5 U	1.4 U	1.1 U	1.5 U	1.6 U	1.1 U	**2.3**	1.2 U	1.2 U
1,3-Dichlorobenzene	3,840	0.8 U	0.6 U	0.6 U		1.3 U	1.3 U	1.3 U	1.5 U	1.4 U	1.1 U	1.5 U	1.6 U	1.1 U	1.2 U	1.2 U	1.2 U
1,4-Dichlorobenzene	3,500	0.8 U	0.6 U	0.6 U		1.3 U	1.3 U	1.3 U	1.5 U	1.4 U	1.1 U	1.5 U	1.6 U	1.1 U	1.2 U	1.2 U	1.2 U
Methyl Iodide	---	0.8 U	0.6 U	0.6 U		1.3 U	1.3 U	1.3 U	1.5 U	1.4 U	1.1 U	1.5 U	1.6 U	1.1 U	1.2 U	1.2 U	1.2 U
1,3,5-Trimethylbenzene	800,000	0.8 U	0.6 U	0.6 U		1.3 U	1.3 U	1.3 U	1.5 U	1.4 U	1.1 U	1.5 U	1.6 U	1.1 U	1.2 U	1.2 U	1.2 U
1,2,4-Trimethylbenzene	800,000	0.8 U	0.6 U	0.6 U		1.3 U	1.3 U	1.3 U	1.5 U	1.4 U	1.1 U	1.5 U	1.6 U	1.1 U	**0.7** J1	1.2 U	1.2 U
Isopropylbenzene	78,000	0.8 U	0.6 U	0.6 U		1.3 U	1.3 U	1.3 U	1.5 U	1.4 U	1.1 U	1.5 U	1.6 U	1.1 U	1.2 U	1.2 U	1.2 U
n-Propylbenzene	11,000	0.8 U	0.6 U	0.6 U		1.3 U	1.3 U	1.3 U	1.5 U	1.4 U	1.1 U	1.5 U	1.6 U	1.1 U	1.2 U	1.2 U	1.2 U
4-Isopropyltoluene	---	0.8 U	0.6 U	0.6 U		1.3 U	1.3 U	1.3 U	1.5 U	1.4 U	1.1 U	1.5 U	1.6 U	1.1 U	1.2 U	1.2 U	1.2 U
n-Butylbenzene	27,000	0.8 U	0.6 U	0.6 U		1.3 U	1.3 U	1.3 U	1.5 U	1.4 U	1.1 U	1.5 U	1.6 U	1.1 U	1.2 U	1.2 U	1.2 U
Naphthalene	2,100	4 U	3 U	3.2 U		6.4 U	6.5 U	6.4 U	7.3 U	7.2 U	5.5 U	7.3 U	8.0 U	5.5 U	6.1 U	6.2 U	5.9 U
SEMIVOLATILES (µg/kg)																	
Method SW8270D																	
Phenol	1,900,000	65 U	64 U	63 U		19 U	19 U	19 U	19 U	110 U	18 UJ	19 U	19 U	18 U	20 U	19 U	20 U
Benzyl Alcohol	8,000,000	330 UJ	320 UJ	320 UJ		19 U	19 U	19 U	**79**	110 U	18 U	19 U	19 U	18 U	20 U	19 U	20 U
4-Methylphenol	41,000	65 U	64 U	63 U		38 U	37 U	38 U	38 U	220 U	36 UJ	38 U	37 U	36 U	39 U	38 U	39 U
2,4-Dimethylphenol	95,000	65 U	64 U	63 U		38 U	37 U	38 U	38 U	220 UJ	36 UJ	38 UJ	37 UJ	36 U	39 U	38 U	39 U
Benzoic Acid	9,000	650 U	640 U	630 U		380 U	370 U	380 U	380 U	2200 UJ	360 UJ	380 UJ	370 UJ	360 U	390 U	380 U	390 U
Naphthalene	2,100	65 U	64 U	63 U		**9.5** J1	19 U	19 U	19 U	110 U	18 U	19 U	19 U	18 U	20 U	19 U	20 U
2-Methylnaphthalene	320,000	65 U	64 U	63 U		19 U	19 U	19 U	19 U	**120**	18 U	19 U	19 U	18 U	20 U	19 U	20 U
Acenaphthylene	---	65 U	64 U	63 U		19 U	19 U	19 U	19 U	110 U	18 U	19 U	19 U	18 U	20 U	19 U	20 U
Acenaphthene	230,000	65 U	64 U	63 U		19 U	19 U	19 U	19 U	110 U	18 U	19 U	19 U	18 U	20 U	19 U	20 U
Dibenzofuran	80,000	65 U	64 U	63 U		19 U	19 U	19 U	19 U	110 U	18 U	19 U	19 U	18 U	20 U	19 U	20 U
Fluorene	150,000	65 U	64 U	63 U		19 U	19 U	19 U	19 U	110 U	18 U	19 U	19 U	18 U	20 U	19 U	20 U
Phenanthrene	---	65 U	64 U	63 U		**30**	**13** J1	19 U	19 U	**120**	**14** J1	19 U	19 U	**10** J1	20 U	19 U	20 U
Carbazole	50,000	65 U	64 U	63 U		19 U	19 U	19 U	19 U	110 U	18 U	19 U	19 U	18 U	20 U	19 U	20 U
Anthracene	1,600,000	65 U	64 U	63 U		19 U	19 U	19 U	19 U	110 U	18 U	19 U	19 U	18 U	20 U	19 U	20 U
Di-n-Butylphthalate	26,000	65 U	64 U	63 U		**11** J1	**18** J1	19 U	19 U	110 U	18 U	19 U	19 U	**13** J1	**13** J1	**10** J1	**17** J1
Fluoranthene	230,000	65 U	**75**	**66**		**39**	**12** J1	19 U	19 U	110 U	18 U	19 U	19 U	**11** J1	20 U	19 U	20 U
Pyrene	240,000	65 U	**96**	**67**		**56** J	**18** J, J1	19 U	19 U	**83** J1	18 U	19 U	19 U	**12** J, J1	20 U	19 U	20 U
Benzo(a)anthracene	---	65 U	64 U	63 U		**25**	19 U	19 U	19 U	110 U	18 U	19 U	19 U	18 U	20 U	19 U	20 U
bis(2-Ethylhexyl)phthalate	56,600	65 U	**520**	63 U		29 U	84 U	36 U	57 U	140 U	23 U	24 U	23 U	26 U	38 U	24 U	33 U
Chrysene	---	65 U	**78**	63 U		**29**	**15** J1	19 U	19 U	**150**	**22**	19 U	19 U	**10** J1	20 U	19 U	20 U
Benzo(a)pyrene	---	65 U	64 U	63 U		**24**	**11** J1	19 U	19 U	**72** J1	18 U	19 U	19 U	18 U	20 U	19 U	20 U
Indeno(1,2,3-cd)pyrene	---	65 U	64 U	63 U		**18** J1	19 U	19 U	19 U	110 U	18 U	19 U	19 U	**11** J1	20 U	19 U	20 U
Dibenz(a,h)anthracene	---	65 U	64 U	63 U		19 U	19 U	19 U	19 U	110 U	18 U	19 U	19 U	18 U	20 U	19 U	20 U
Benzo(g,h,i)perylene	---	65 U	64 U	63 U		**18** J1	19 U	19 U	19 U	110 U	18 U	19 U	19 U	18 U	20 U	19 U	20 U
1-Methylnaphthalene	16,000					19 U	19 U	19 U	19 U	110 U	18 U	19 U	19 U	18 U	20 U	19 U	20 U
Total Benzofluoranthenes	---					**40**	**21**	19 U	19 U	110 U	18 U	19 U	19 U	**18**	20 U	19 U	20 U
cPAH TEQ	15	ND	**1**	ND		**33** J	**13** J	ND	ND	**74** J	**0.22**	ND	ND	**3** J	ND	ND	ND

TABLE Q-2
SOIL ANALYTICAL DETECTS
NORTH OF FORMER SLIP 5 AREA
BOEING ISAACSON-THOMPSON
REMEDIAL INVESTIGATION

		Former Sump/Northeast Property Corner			Former Paint Storage Area												
	Preliminary Cleanup Levels	IssacEx-01 (5) KH07A 11/30/2006	IssacEx-02 (1.5) KH07B 11/30/2006	IssacEx-03 (2) KH07C 11/30/2006	2 (2.5) 8/1/1983	IT-SB-9(2-3.5) TX02E 11/14/2011	IT-SB-9(5-6.5) TX02F 11/14/2011	IT-SB-9(8-8.5) TX02G 11/14/2011	IT-SB-9(14-15.5) TX02H 11/14/2011	IT-SB-10(2-3.5) TU90P 11/01/2011	IT-SB-10(5-6.5) TU90Q 11/01/2011	IT-SB-10(8-9.5) TU90T 11/01/2011	IT-SB-10(13.5-15) TU90S 11/01/2011	IT-SB-11(2-3.5) TX02A 11/14/2011	IT-SB-11(5-6.5) TX02B 11/14/2011	IT-SB-11(8-9) TX02C 11/14/2011	IT-SB-11(14-15.5) TX02D 11/14/2011
PAHs (µg/kg)																	
Method SW8270D-SIM																	
Naphthalene	2,100					11	6.4	4.8 U	3.0 J1	26	4.4 U	4.6 U	2.5 J1	4.8	4.8 U	4.9 U	3.0 J1
2-Methylnaphthalene	320,000					6.6	7.1	4.8 U	3.7 J1	52	2.9 J1	4.6 U	4.7 U	4.3 J1	4.8 U	4.9 U	3.6 J1
1-Methylnaphthalene	16,000					6.0	6.6	4.8 U	3.1 J1	39	2.2 J1	4.6 U	4.7 U	3.7 J1	4.8 U	2.7 J1	3.3 J1
Total Naphthalenes	---					23.6	20.1	4.8 U	9.8 J1	117	5.1 J1	4.6 U	2.5 J1	12.8 J1	4.8 U	2.7 J1	9.9 J1
Acenaphthylene	---					6.9	4.7 U	4.8 U	4.7 U	9.7 J1	4.4 U	4.6 U	4.7 U	4.6 U	4.8 U	4.9 U	4.7 U
Acenaphthene	230,000					2.9 J1	8.9	4.8 U	4.7 U	13 U	4.4 U	4.6 U	4.7 U	4.6 U	4.8 U	4.9 U	4.7 U
Fluorene	150,000					3.9 J1	5.4	4.8 U	4.7 U	9.9 J1	4.4 U	4.6 U	4.7 U	4.6 U	4.8 U	4.9 U	4.7 U
Phenanthrene	---					83	73	4.8 U	5.6	91	8.4	3.4 J1	3.8 J1	12	6.1	2.6 J1	7.8
Anthracene	1,600,000					4.7	15	4.8 U	4.7 U	24	4.4 U	4.6 U	4.7 U	4.6 U	4.8 U	4.9 U	4.7 U
Fluoranthene	230,000					99	79	4.8 U	4.7 U	74	3.6 J1	4.6 U	4.7 U	20	2.8 J1	4.9 U	4.1 J1
Pyrene	240,000					95	66	4.8 U	4.7 U	71	4.1 J1	4.6 U	2.4 J1	18	3.9 J1	4.9 U	4.6 J1
Benzo(a)anthracene	---					26	32	4.8 U	4.7 U	26	2.8 J1	4.6 U	4.7 U	10	2.7 J1	4.9 U	4.7 U
Chrysene	---					51	38	4.8 U	4.7 U	120	14	4.6 U	4.7 U	16	14	4.9 U	7.6
Benzo(a)pyrene	---					41	34	4.8 U	4.7 U	45	10	4.6 U	4.7 U	15	3.7 J1	4.9 U	3.7 J1
Indeno(1,2,3-cd)pyrene	---					30	22	4.8 U	4.7 U	34	4.4 U	4.6 U	4.7 U	11	4.8 U	4.9 U	4.7 U
Dibenz(a,h)anthracene	---					8.0	6.7	4.8 U	4.7 U	14	4.4 U	4.6 U	4.7 U	4.4 J1	4.8 U	4.9 U	4.7 U
Benzo(g,h,i)perylene	---					33	27	4.8 U	4.7 U	100	4.6	4.6 U	4.7 U	14	5.4	4.9 U	4.9
Dibenzofuran	80,000					5.6	5.1	4.8 U	4.7 U	12 J1	4.4 U	4.6 U	4.7 U	2.4 J1	4.8 U	4.9 U	4.7 U
Total Benzofluoranthenes	---					76	58	4.8 U	4.7 U	70	4.4 U	4.6 U	4.7 U	28	4.8 U	4.9 U	4.7 U
cPAH TEQ	15					56	46	ND	ND	61	10.4 J	ND	ND	21 J	4.1 J	ND	3.8 J
PCBs (µg/kg)																	
Method SW8082																	
Aroclor 1254	0.29	33 U	33 U	32 U		33 U	43	33 U	32 U	150 U	30 U	33 U	31 U	32 U	30 U	31 U	32 U
Aroclor 1260	5.4	33 U	41	32 U		33 U	33 U	33 U	32 U	150 U	30 U	33 U	31 U	32 U	30 U	31 U	32 U
Total PCBs	1.8	ND	41	ND		ND	43	ND	ND	ND	ND	ND	ND	ND	ND	ND	ND
TOTAL PETROLEUM HYDROCARBONS (mg/kg)																	
NWTPH-HCID																	
Lube Oil	---																
NWTPH-Dx																	
Diesel-Range Organics	2,000	6.2 U	7.3	5.7 U		5.7 U	5.6 U	5.2 U	6.2 U	400	7.5	5.7 U	6.7 U	5.8 U	5.4 U	5.4 U	6.0 U
Oil-Range Organics	2,000	12 U	65	11		11 U	11 U	10 U	13	770	47	11 U	13 U	12 U	30	11 U	26
NWTPH-G																	
Gasoline-Range Organics	100/30					6.9 U	6.7 U	7.1 U	8.3 U	6.1 U	5.6 U	8.4 U	9.3 U	8.2 U	7.0 U	6.6 U	7.4 U
TOTAL METALS (mg/kg)																	
Methods 200.8/7471A/SW7196A																	
Antimony	5					0.2 U	0.2 U	0.2 U	0.3 U	0.2 U	0.2 U	0.2 U	0.3 U	0.2 UJ	0.2 U	0.2 U	0.3 U
Barium	640	46.1	51.4	61.6	44	47.8	48.6	25.8	45.1	150	35.0	36.1	47.0	58.2 J	28.4	30.7	55.3
Beryllium	160					0.2 U	0.2 U	0.2 U	0.3 U	0.3	0.2 U	0.2 U	0.3 U	0.2	0.2 U	0.2 U	0.3 U
Cadmium	1.3	0.2 U	0.4	0.3	0.12	0.1 U	0.1 U	0.1 U	0.1 U	0.1	0.1 U	0.1 U	0.1 U	0.3	0.1 U	0.1 U	0.1 U
Chromium	1,480	11.2	23.5	12.1	20	11.2	14.7	9.0	14.0	20.7	9.3	10.5	12.6	16.0	8.6	8.6	15.0
Chromium VI	3.8					0.443 U	0.447 U	0.421 U	0.536 U	0.445 U	0.429	0.436 U	0.536 U	0.464 UJ	0.427 U	0.429 U	0.499 U
Copper	36					16.8	18.0	10.6	17.9	45.9	12.9	14.8	490	1170	51.8	11.1	63.2
Lead	250	4	85	27	11	11.8	19.7	1.3	2.1	29.3	1.9	1.6	2.3	14.4	1.6	1.4	3.7
Mercury	1.5	0.04 U	0.05 U	0.05	0.08	0.04	0.03 U	0.02 U	0.03 U	0.06	0.03 U	0.02 U	0.03 U	0.08 J	0.02 U	0.02 U	0.03
Nickel	210				16	9.2	17.2	8.0	11.0	31.6	8.5	9.0	9.4	20.6	8.3	7.6	12.0
Silver	170	0.2 U	0.2 U	0.2 U	0.3 U	0.2 U	0.6	0.2 U	0.3 U	0.2 U	0.2 U	0.2 U	0.3 U	0.2 U	0.2 U	0.2 U	0.3 U
Zinc	1,400				37	40	55	20	32	93	24	23	272	195	268	81	62
CONVENTIONALS (mg/kg)																	
Oil and Grease	---																
Total Organic Carbon	---																

TABLE Q-2
SOIL ANALYTICAL DETECTS
NORTH OF FORMER SLIP 5 AREA
BOEING ISAACSON-THOMPSON
REMEDIAL INVESTIGATION

		Former Diesel and Gasoline Tank Area		Vicinity of Former Steam Cleaning Rack and Sump and Boiler Tank Areas						Observed Tar-Like Substance Area												
	Preliminary Cleanup Levels	1 (5.5) 8/1/1983	IT-TP-109-SWS(9-10) TT67A 10/25/2011	B-12 (14) 1983	I-2 (14.5) 10/14/1983	IMR-19 OA02C 11/13/2008	IT-MW-25(8-9.5) TX01A 11/14/2011	IT-MW-25(13.5-15) TX01B 11/14/2011	IT-MW-25(15.5-17) TX01C 11/14/2011	IMR-1 NS65A 10/3/2008	IT-TP-107-B(11-12) TU01F 10/26/2011	IT-TP-107-SWN(1-2) TU01A 10/26/2011	IT-TP-107-SWN(2-3) TU01E 10/26/2011	IT-TP-107-SWS(1-2) TU01C 10/26/2011	IT-TP-107-SWE(1-2) TU01B 10/26/2011	IT-TP-107-SWW(1-2) TU01D 10/26/2011	IT-TP-108-B(11-12) TU01L 10/26/2011	IT-TP-108-SWN(1-2) TU01G 10/26/2011	IT-TP-108-SWN(2-3) TU01K 10/26/2011	IT-TP-108-SWS(1-2) TU01H 10/26/2011	IT-TP-108-SWE(1-2) TU01I 10/26/2011	IT-TP-108-SWW(1-2) TU01J 10/26/2011
VOLATILES (µg/kg)																						
Method SW8260C																						
Chloromethane	1,600		1.3 U				1.2 U	1.2 UJ	1.3 UJ	1.2 U	1.3 U	1.2 U	1.3 U	1.1 U	1.7 U	1.0 U	1.4 U	1.4 U	1.3 U	1.2 U	1.5 U	**1.0** J1
Methylene Chloride	2,400		**3.1**				**2.3** J1	**1.4** J, J1	**3.3** J	2.4 U	**3.2** J	2.4 U	**2.6** J, J1	**2.9** J	3.5 U	**1.5** J, J1	**3.0** J	2.9 U	**3.5** J	**1.9** J, J1	3.0 U	3.6 U
Acetone	510,000		**11**				**35** J	**18** J	**38** J	6.0 U	**44** J	**130** J	**25** J	**45** J	**230** J	**51** J	**28** J	**65** J	**17** J	**140** J	**140** J	**82** J
Carbon Disulfide	75,000		1.3 U				1.2 U	**2.4** J	1.3 U	1.2 U	1.3 U	1.2 U	1.3 U	1.1 U	**1.7**	1.0 U	1.4 U	1.4 U	1.3 U	**1.0** J1	1.5 U	**1.0** J1
2-Butanone	430,000		6.4 U				5.9 U	6.0 U	6.7 U	6.0 U	6.6 U	**14**	6.6 U	**3.9** J1	**17**	**2.9** J1	6.8 U	**6.4** J1	6.6 U	**21**	**17**	**15**
Trichloroethene	51		1.3 U				1.2 U	**1.8**	1.3 U	1.2 U	1.3 U	1.2 U	1.3 U	1.1 U	1.7 U	1.0 U	1.4 U	1.4 U	1.3 U	1.2 U	1.5 U	1.8 U
Benzene	93		1.3 U				1.2 U	1.2 U	1.3 U	1.2 U	**1.1** J1	**0.7** J1	1.3 U	**1.3**	**0.9** J1	1.0 U	1.4 U	1.4 U	1.3 U	**1.3**	**4.4**	**2.0**
Tetrachloroethene	260		1.3 U				**1.6**	1.2 U	1.3 U	1.2 U	1.3 U	1.2 U	1.3 U	1.1 U	1.7 U	1.0 U	1.4 U	1.4 U	1.3 U	1.2 U	1.5 U	1.8 U
Toluene	100,000		1.3 U				1.2 U	1.2 U	1.3 U	1.2 U	1.3 U	**1.9**	1.3 U	**0.7** J1	**5.3**	**1.0** J1	1.4 U	1.4 U	1.3 U	**0.8** J1	**2.0**	**2.0**
Ethylbenzene	230		1.3 U				1.2 U	**1.2** J1	1.3 U	1.2 U	1.3 U	1.2 U	1.3 U	1.1 U	1.7 U	1.0 U	1.4 U	1.4 U	1.3 U	1.2 U	1.5 U	1.8 U
Styrene	16,000,000		1.3 U				1.2 U	1.2 U	1.3 U	1.2 U	1.3 U	1.2 U	1.3 U	1.1 U	1.7 U	1.0 U	1.4 U	1.4 U	1.3 U	1.2 U	1.5 U	1.8 U
Trichlorofluoromethane	200,000		1.3 U				**1.7**	**0.8** J, J1	1.3 U	1.2 U	1.3 U	1.2 U	1.3 U	1.1 U	1.7 U	1.0 U	1.4 U	1.4 U	1.3 U	1.2 U	1.5 U	1.8 U
m,p-Xylene	160,000		1.3 U				1.2 U	**4.3**	**2.3**	1.2 U	1.3 U	**0.6** J1	1.3 U	1.1 U	1.7 U	1.0 U	1.4 U	1.4 U	1.3 U	1.2 U	**1.0** J1	**1.8** J1
o-Xylene	200,000		1.3 U				1.2 U	**4.1**	**1.6**	1.2 U	1.3 U	1.2 U	1.3 U	1.1 U	1.7 U	1.0 U	1.4 U	1.4 U	1.3 U	1.2 U	**0.8** J1	**1.6** J1
1,3-Dichlorobenzene	3,840		1.3 U				1.2 U	1.2 UJ	1.3 U	1.2 U	1.3 U	**0.6** J1	1.3 U	1.1 U	1.7 U	1.0 U	1.4 U	1.4 U	1.3 U	1.2 U	1.5 U	1.8 U
1,4-Dichlorobenzene	3,500		1.3 U				1.2 U	1.2 UJ	1.3 U	1.2 U	1.3 U	**0.7** J1	1.3 U	1.1 U	1.7 U	1.0 U	1.4 U	1.4 U	1.3 U	1.2 U	1.5 U	1.8 U
Methyl Iodide	---		1.3 U				1.2 U	1.2 UJ	1.3 U	1.2 U	1.3 U	1.2 U	1.3 U	1.1 U	1.7 U	1.0 U	1.4 U	1.4 U	1.3 U	1.2 U	1.5 U	1.8 U
1,3,5-Trimethylbenzene	800,000		1.3 U				1.2 U	**1.4**	**0.8** J1	1.2 U	1.3 U	1.2 U	1.3 U	1.1 U	**2.0**	1.0 U	1.4 U	1.4 U	1.3 U	1.2 U	1.5 U	**1.8**
1,2,4-Trimethylbenzene	800,000		1.3 U				1.2 U	**2.9**	**1.7**	1.2 U	1.3 U	**1.3**	1.3 U	1.1 U	**3.7**	1.0 U	1.4 U	1.4 U	1.3 U	1.2 U	**1.2** J1	**4.0**
Isopropylbenzene	78,000		1.3 U				1.2 U	**1.2** J1	1.3 U	1.2 U	1.3 U	1.2 U	1.3 U	1.1 U	1.7 U	1.0 U	1.4 U	1.4 U	1.3 U	1.2 U	1.5 U	1.8 U
n-Propylbenzene	11,000		1.3 U				1.2 U	**1.3**	1.3 U	1.2 U	1.3 U	1.2 U	1.3 U	1.1 U	1.7 U	1.0 U	1.4 U	1.4 U	1.3 U	1.2 U	1.5 U	1.8 U
4-Isopropyltoluene	---		1.3 U				1.2 U	1.2 U	1.3 U	1.2 U	1.3 U	**3.2**	1.3 U	1.1 U	**6.3**	1.0 U	1.4 U	1.4 U	1.3 U	**0.9** J1	**0.8** J1	**1.6** J1
n-Butylbenzene	27,000		1.3 U				1.2 U	1.2 U	1.3 U	1.2 U	1.3 U	**0.6** J1	1.3 U	1.1 U	1.7 U	1.0 U	1.4 U	1.4 U	1.3 U	1.2 U	1.5 U	1.8 U
Naphthalene	2,100		6.4 U				5.9 U	**0.7** J, J1	**1.1** J, J1	6.0 U	6.6 U	**2.6** J1	6.6 U	5.5 U	8.6 U	5.1 U	6.8 U	7.2 U	6.6 U	6.0 U	**2.0** J1	**6.3** J, J1
SEMIVOLATILES (µg/kg)																						
Method SW8270D																						
Phenol	1,900,000		19 U				18 U	18 U	19 U	1200 U	20 U	290 U	20 U	20 UJ	97 UJ	18 UJ	19 U	120 U	19 U	98 U	94 U	280 U
Benzyl Alcohol	8,000,000		19 U				18 U	18 U	19 U	1200 U	20 U	290 U	20 U	20 U	97 U	18 U	19 U	120 U	19 U	98 U	94 U	280 U
4-Methylphenol	41,000		38 U				37 U	36 U	38 U	1200 U	39 U	580 U	39 U	39 UJ	200 UJ	36 UJ	38 U	250 U	38 U	**78** J1	190 U	560 U
2,4-Dimethylphenol	95,000		38 U				37 U	36 U	38 U	1200 U	39 UJ	580 UJ	39 UJ	39 UJ	200 UJ	36 UJ	38 UJ	250 UJ	38 UJ	200 UJ	190 UJ	560 UJ
Benzoic Acid	9,000		380 UJ				370 U	360 U	380 U	12,000 U	390 U	5800 U	390 U	390 UJ	2000 UJ	360 UJ	380 U	2500 U	380 U	2000 U	1900 U	5600 U
Naphthalene	2,100		19 U				18 U	18 U	19 U	1200 U	20 U	**280** J1	20 U	20 U	**190**	**18**	19 U	**220**	19 U	**1700**	**190**	280 U
2-Methylnaphthalene	320,000		19 U				18 U	18 U	19 U	1200 U	20 U	**230** J1	**12** J1	20 U	**170**	**14** J1	19 U	**290**	19 U	**880**	**250**	**200** J1
Acenaphthylene	---		19 U				18 U	18 U	19 U	1200 U	20 U	290 U	20 U	**11** J1	97 U	**24**	19 U	**69** J1	19 U	**59** J1	94 U	280 U
Acenaphthene	230,000		19 U				18 U	18 U	19 U	1200 U	20 U	290 U	20 U	20 U	**130**	18 U	19 U	120 U	19 U	**1600**	94 U	280 U
Dibenzofuran	80,000		19 U				18 U	18 U	19 U	1200 U	20 U	290 U	20 U	20 U	**73** J1	18 U	19 U	120 U	19 U	**690**	94 U	280 U
Fluorene	150,000		19 U				18 U	18 U	19 U	1200 U	20 U	290 U	20 U	20 U	**160**	18 U	19 U	**75** J1	19 U	**1500**	**52** J1	280 U
Phenanthrene	---		19 U				**27**	18 U	19 U	**2400**	20 U	**890**	**12** J1	**68**	**1600**	**56**	19 U	**480**	19 U	**7500**	**330**	**1200**
Carbazole	50,000		19 U				18 U	18 U	19 U	1200 U	20 U	290 U	20 U	20 U	**68** J1	18 U	19 U	120 U	19 U	**2600**	94 U	280 U
Anthracene	1,600,000		19 U				18 U	18 U	19 U	1200 U	20 U	**320**	20 U	**12** J1	**410**	**12** J1	19 U	**130**	19 U	**1800**	**70** J1	**220** J1
Di-n-Butylphthalate	26,000		19 U				18 U	18 U	19 U	1200 U	20 U	290 U	20 U	**12** J1	97 U	18 U	19 U	120 U	19 U	98 U	**66** J1	280 U
Fluoranthene	230,000		19 U				**20**	18 U	19 U	1200 U	20 U	**940**	20 U	**130**	**1600**	**61**	19 U	**370**	19 U	**6600**	**210**	**400**
Pyrene	240,000		19 U				**26**	18 U	19 U	**4200**	20 U	**1900**	**13** J1	**190**	**2200**	**110**	19 U	**1100**	19 U	**6000**	**560**	**2100**
Benzo(a)anthracene	---		19 U				**14** J1	18 U	19 U	**2600**	20 U	**640**	20 U	**85**	**840**	**60**	19 U	**220**	19 U	**2800**	**220**	**850**
bis(2-Ethylhexyl)phthalate	56,600		24 U				**72**	**94**	**86**	1200 U	24 U	360 U	**21** J1	25 U	120 U	23 U	24 U	160 U	24 U	120 U	120 U	350 U
Chrysene	---		19 U				**27**	18 U	19 U	**8800**	20 U	**1200**	20 U	**110**	**1100**	**81**	19 U	**390**	19 U	**3400**	**540**	**2000**
Benzo(a)pyrene	---		19 U				**14** J1	18 U	19 U	**2400**	20 U	**1000**	20 U	**100**	**1100**	**100**	19 U	**260**	19 U	**1800**	**170**	**560**
Indeno(1,2,3-cd)pyrene	---		19 U				18 U	18 U	19 U	1200 U	20 U	**570**	20 U	**63**	**640**	**66**	19 U	**120**	19 U	**630**	**94**	**140** J1
Dibenz(a,h)anthracene	---		19 U				18 U	18 U	19 U	1200 U	20 U	290 U	20 U	**19** J1	**200**	**24**	19 U	120 U	19 U	**300**	94 U	280 U
Benzo(g,h,i)perylene	---		19 U				18 U	18 U	19 U	1200 U	20 U	**850**	**20**	**89**	**850**	**97**	19 U	**240**	19 U	**810**	**190**	**320**
1-Methylnaphthalene	16,000		19 U				18 U	18 U	19 U	1200 U	20 U	290 U	20 U	20 U	**88** J1	18 U	19 U	**110** J1	19 U	**440**	**120**	280 U
Total Benzofluoranthenes	---		19 U				18 U	18 U	19 U		20 U	**1100**	**16** J1	**160**	**1400**	**140**	19 U	**320**	19 U	**3400**	**220**	**530**
cPAH TEQ	15		ND				**16** J	ND	ND	**2748**	ND	**1243**	**2** J	**134** J	**1419**	**130**	ND	**330**	ND	**2547**	**229**	**732** J

TABLE Q-2
SOIL ANALYTICAL DETECTS
NORTH OF FORMER SLIP 5 AREA
BOEING ISAACSON-THOMPSON
REMEDIAL INVESTIGATION

		Former Diesel and Gasoline Tank Area		Vicinity of Former Steam Cleaning Rack and Sump and Boiler Tank Areas						Observed Tar-Like Substance Area												
	Preliminary Cleanup Levels	1 (5.5) 8/1/1983	IT-TP-109-SWS(9-10) TT67A 10/25/2011	B-12 (14) 1983	I-2 (14.5) 10/14/1983	IMR-19 OA02C 11/13/2008	IT-MW-25(8-9.5) TX01A 11/14/2011	IT-MW-25(13.5-15) TX01B 11/14/2011	IT-MW-25(15.5-17) TX01C 11/14/2011	IMR-1 NS65A 10/3/2008	IT-TP-107-B(11-12) TU01F 10/26/2011	IT-TP-107-SWN(1-2) TU01A 10/26/2011	IT-TP-107-SWN(2-3) TU01E 10/26/2011	IT-TP-107-SWS(1-2) TU01C 10/26/2011	IT-TP-107-SWE(1-2) TU01B 10/26/2011	IT-TP-107-SWW(1-2) TU01D 10/26/2011	IT-TP-108-B(11-12) TU01L 10/26/2011	IT-TP-108-SWN(1-2) TU01G 10/26/2011	IT-TP-108-SWN(2-3) TU01K 10/26/2011	IT-TP-108-SWS(1-2) TU01H 10/26/2011	IT-TP-108-SWE(1-2) TU01I 10/26/2011	IT-TP-108-SWW(1-2) TU01J 10/26/2011
PAHs (µg/kg)																						
Method SW8270D-SIM																						
Naphthalene	2,100		4.6 U				3.2 J1	4.0 J1	4.4 J1		4.8 U	450	6.3	5.7	170	10	4.7 U	190	4.7 U	1400	140	95
2-Methylnaphthalene	320,000		4.6 U				4.4 J1	3.8 J1	4.6 J1		4.8 U	380	9.9	4.8 J1	170	9.7	4.7 U	330	4.7 U	760	220	230
1-Methylnaphthalene	16,000		4.6 U				3.3 J1	4.2 J1	3.9 J1		4.8 U	310	8.0	3.8 J1	110	7.1	4.7 U	150	4.7 U	410	120	170
Total Naphthalenes	---		4.6 U				10.9 J1	12.0	12.9 J1		4.8 U	1140	24.2	14.3 J1	450	26.8	4.7 U	670	4.7 U	2570	480	495
Acenaphthylene	---		4.6 U				4.7 U	4.6 U	4.8 U		4.8 U	57	5.0 U	3.9 J1	46	7.1	4.7 U	26 U	4.7 U	45	31	82
Acenaphthene	230,000		4.6 U				4.1 J1	4.6 U	4.8 U		4.8 U	740	5.0 U	5.0 U	160	6.7	4.7 U	210	4.7 U	1600	66	44 U
Fluorene	150,000		4.6 U				4.7 U	6.4	4.6 J1		4.8 U	530	5.0 U	2.6 J1	120	5.0	4.7 U	180	4.7 U	1800	50	150
Phenanthrene	---		4.6 U				14	6.4	4.6 J1		6.6	4400	11	25	1200	57	4.7 U	450	4.7 U	11000	400	1600
Anthracene	1,600,000		4.6 U				4.7 U	4.6 U	4.8 U		4.8 U	1300	5.0 U	5.0	280	11	4.7 U	140	2.6 J1	2500	93	360
Fluoranthene	230,000		4.6 U				12	4.8	4.8 U		4.8 U	5400	7.9	39	1300	71	4.7 U	450	4.7 U	9600	360	750
Pyrene	240,000		4.6 U				15	5.1	2.6 J1		4.8 U	5900	9.5	43	1600	84	4.7 U	1200	4.7 U	7400	590	2800
Benzo(a)anthracene	---		4.6 U				8.3	2.5 J1	4.8 U		4.8 U	3400	5.7	22	730	39	4.7 U	200	4.7 U	3100	240	920
Chrysene	---		4.6 U				24	5.6	3.8 J1		4.8 U	4200	8.0	28	1200	48	4.7 U	470	4.7 U	2800	520	2700
Benzo(a)pyrene	---		4.6 U				12	5.3	4.8 U		4.8 U	5200	8.7	28	970	48	4.7 U	250	4.7 U	1400	240	700
Indeno(1,2,3-cd)pyrene	---		4.6 U				4.2 J1	4.6 U	4.8 U		4.8 U	2900	5.7	24	440	38	4.7 U	160	4.7 U	500	99	190
Dibenz(a,h)anthracene	---		4.6 U				3.4 J1	4.6 U	4.8 U		4.8 U	810	5.0 U	7.0	200	13	4.7 U	69	4.7 U	250	39	110
Benzo(g,h,i)perylene	---		4.6 U				9.8	2.9 J1	3.6 J1		4.8 U	3400	6.9	33	650	51	4.7 U	240	4.7 U	680	180	480
Dibenzofuran	80,000		4.6 U				4.7 U	2.4 J1	4.8 U		4.8 U	320	3.1 J1	5.0 U	76	3.8 J1	4.7 U	26 U	4.7 U	810	33	37 J1
Total Benzofluoranthenes	---		4.6 U				14	4.6 U	4.8 U		4.8 U	6400	15	44	1200	72	4.7 U	330	4.7 U	2700	290	650
cPAH TEQ	15		ND				15 J	5.6 J	0.04 J		ND	6593	11	14	1239	65	ND	331	ND	2083	312	914
PCBs (µg/kg)																						
Method SW8082																						
Aroclor 1254	0.29		26 U				32 U	32 U	33 U		32 U	32 U	31 U	31 U	31 U	31 U	33 U	33 U	32 U	31 U	32 U	32 U
Aroclor 1260	5.4		26 U				32 U	32 U	33 U		32 U	32 U	31 U	31 U	31 U	31 U	33 U	33 U	32 U	31 U	32 U	32 U
Total PCBs	1.8	200 U	ND				ND	ND	ND		ND	ND	ND	ND	ND	ND	ND	ND	ND	ND	ND	ND
TOTAL PETROLEUM HYDROCARBONS (mg/kg)																						
NWTPH-HCID																						
Lube Oil	---																					
NWTPH-Dx																						
Diesel-Range Organics	2,000		5.2 U				24	51	6.8	7400	6.8 U	280	5.4 U	6.4	200	11	6.1 U	2500	5.2 U	1100	500	1400
Oil-Range Organics	2,000		10 U				100	53	18	25,000	14 U	800	11 U	32	500	51	12 U	2000	10 U	1500	1400	3100
NWTPH-G																						
Gasoline-Range Organics	100/30		17				10	7.0 U	8.4 U		8.3 U	14	7.9 U	7.1 U	13 U	7.1 U	8.0 U	8.0 U	7.7 U	7.0 U	36	24
TOTAL METALS (mg/kg)																						
Methods 200.8/7471A/SW7196A																						
Antimony	5		0.2 UJ				0.2 U	0.2 UJ	0.2 U		0.3 U	0.2 UJ	0.2 U	0.2 U	0.2 U	0.2 U	0.2 U	0.2 U	0.2 U	0.2 U	0.2 U	0.2 U
Barium	640	26	21.3 J			78.5	62.2	30.0 J	28.6		71.9	169	38.9	70.3	153	57.1	30.7	165	22.7	79.6	77.7	71.4
Beryllium	160		0.2 U				0.2	0.2 U	0.2 U		0.3 U	0.2 U	0.2 U	0.2	0.2 U	0.2 U	0.2 U	0.3	0.2 U	0.2 U	0.2 U	0.3
Cadmium	1.3	0.03	0.1 U			1.8	0.1 U	0.1 U	0.1 U		0.1 U	0.3	0.1 U	0.2	0.3	0.2	0.1 U	0.3	0.1 U	0.3	0.3	0.2
Chromium	1,480	11	9.3		9.3	30.9	18.2	10.7	8.7		14.8	13.3	12	14.5	14.1	16.9	8.0	20	6.7	14.1	11.2	17.1
Chromium VI	3.8		0.414 U				0.449 UJ	0.496 U	0.477 U		0.534 U	0.469 UJ	0.434 U	0.423 U	0.481 U	0.439 U	0.484 U	0.444 U	0.417 U	0.471 U	0.558	0.478 U
Copper	36		10.5		420		85.7	303	224		20.9	205	17.5	82.0	196	129	10.9	87.7	8.8	131	42.5	107
Lead	250	1.3	1.4		4.5	87	8.4	2.8	1.4		2.8	81.4 J	7.7	20.0	82.3	26.6	1.5	91.3	1.2	52.8	43.6	52.1
Mercury	1.5	0.03 U	0.02 U			0.69	0.05	0.02	0.02 U		0.03	1.14	0.02	0.08	1.35	0.24	0.02 U	0.32	0.02 U	0.51	0.51	0.21
Nickel	210	9.5	8.8				20.3	10.6	9.0		11.8	14.6	10.6	14.3	15.4	19.2	7.3	22.3	6.3	18.9	12.1	22.1
Silver	170	0.3 U	0.2 U			0.4 U	0.2 U	0.2 U	0.2 U		0.3 U	0.2 U	0.2 U	0.2 U	0.2 U	0.2 U	0.2 U	0.2 U	0.2 U	0.2 U	0.2 U	0.2 U
Zinc	1,400	21	25	388	220		71	135	187		82	157	59	88	193	148	21	139	18	118	92	145
CONVENTIONALS (mg/kg)																						
Oil and Grease	---			93																		
Total Organic Carbon	---																					

TABLE Q-2
SOIL ANALYTICAL DETECTS
NORTH OF FORMER SLIP 5 AREA
BOEING ISAACSON-THOMPSON
REMEDIAL INVESTIGATION

		Former Slip 5 Outfall Area													
	Preliminary Cleanup Levels	18 (2) 8/1/1983	18 (6.5) 8/1/1983	IT-SB-6(2-3.5) TU90H 11/01/2011	IT-SB-6(5-6.5) TU90I 11/01/2011	IT-SB-6(8-9.5) TU90J 11/01/2011	IT-SB-6(13.5-15) TU90K 11/01/2011	IT-SB-7(2-3.5) TU90L 11/01/2011	IT-SB-7(5-6.5) TU90M 11/01/2011	IT-SB-7(8-9.5) TU90N 11/01/2011	IT-SB-7(13-14.5) TU90O 11/01/2011	IT-SB-8(2-3.5) TX01F 11/14/2011	IT-SB-8(5-6.5) TX01G 11/14/2011	IT-SB-8(8-9.5) TX01H 11/14/2011	IT-SB-8(14-15.5) TX01I 11/14/2011
VOLATILES (µg/kg)															
Method SW8260C															
Chloromethane	1,600			1.2 U	1.2 U	1.5 U	1.1 UJ	1.3 UJ	1.0 UJ	1.6 UJ	1.2 UJ	1.4 UJ	1.3 UJ	1.2 UJ	1.3 UJ
Methylene Chloride	2,400			**2.7**	**3.0**	**3.5**	**2.6** J	**3.0** J	**1.7** J, J1	**4.1** J	**2.8** J	2.9 UJ	**4.9** J	**1.3** J, J1	**1.6** J, J1
Acetone	510,000			**64** J	**60** J	19 UJ	**11** J	**12** J	**45** J	**20** J	**13** J	**37** J	**63** J	**34** J	**8.9** J
Carbon Disulfide	75,000			1.2 U	**1.3**	1.5 U	1.1 U	1.3 U	**1.0** J1	1.6 U	1.2 U	**1.7**	1.3 U	1.2 U	1.3 U
2-Butanone	430,000			**5.2** J1	**8.7**	7.3 U	5.5 U	6.5 U	**6.5**	7.8 U	5.9 U	7.2 U	6.4 U	5.9 U	6.6 U
Trichloroethene	51			1.2 U	1.2 U	1.5 U	1.1 U	1.3 U	1.0 U	1.6 U	1.2 U	**1.0** J1	1.3 U	**1.2** J1	**2.0**
Benzene	93			**1.3**	**0.9** J1	1.5 U	**0.6** J1	1.3 U	**0.7** J1	1.6 U	1.2 U	1.4 U	1.3 U	1.2 U	1.3 U
Tetrachloroethene	260			1.2 U	1.2 U	1.5 U	1.1 U	1.3 U	1.0 U	1.6 U	1.2 U	1.4 U	1.3 U	1.2 U	1.3 U
Toluene	100,000			**1.3**	**4.8**	1.5 U	1.1 U	1.3 U	**0.8** J1	1.6 U	1.2 U	1.4 U	1.3 U	1.2 U	1.3 U
Ethylbenzene	230			1.2 U	1.2 U	1.5 U	1.1 U	1.3 U	1.0 U	1.6 U	1.2 U	1.4 U	1.3 U	1.2 U	1.3 U
Styrene	16,000,000			1.2 U	1.2 U	1.5 U	1.1 U	1.3 U	1.0 U	1.6 U	1.2 U	1.4 U	1.3 U	1.2 U	1.3 U
Trichlorofluoromethane	200,000			1.2 U	1.2 U	1.5 U	1.1 U	1.3 U	1.0 U	1.6 U	1.2 U	1.4 U	**2.4** J	**1.9** J	**5.9** J
m,p-Xylene	160,000			1.2 U	**0.8** J1	1.5 U	1.1 U	1.3 U	1.0 U	1.6 U	1.2 U	1.4 U	1.3 U	1.2 U	1.3 U
o-Xylene	200,000			1.2 U	1.2 U	1.5 U	1.1 U	1.3 U	1.0 U	1.6 U	1.2 U	1.4 U	1.3 U	1.2 U	1.3 U
1,3-Dichlorobenzene	3,840			1.2 U	1.2 U	1.5 U	1.1 U	1.3 U	1.0 U	1.6 U	1.2 U	1.4 U	1.3 U	1.2 U	1.3 U
1,4-Dichlorobenzene	3,500			1.2 U	1.2 U	1.5 U	1.1 U	1.3 U	1.0 U	1.6 U	1.2 U	1.4 U	1.3 U	1.2 U	1.3 U
Methyl Iodide	---			1.2 U	1.2 U	1.5 U	1.1 U	1.3 U	1.0 U	1.6 U	1.2 U	1.4 U	**0.7** J1	1.2 U	1.3 U
1,3,5-Trimethylbenzene	800,000			1.2 U	1.2 U	1.5 U	1.1 U	1.3 U	1.0 U	1.6 U	1.2 U	1.4 U	1.3 U	1.2 U	1.3 U
1,2,4-Trimethylbenzene	800,000			1.2 U	1.2 U	1.5 U	1.1 U	1.3 U	1.0 U	1.6 U	1.2 U	1.4 U	1.3 U	1.2 U	1.3 U
Isopropylbenzene	78,000			1.2 U	1.2 U	1.5 U	1.1 U	1.3 U	1.0 U	1.6 U	1.2 U	1.4 U	1.3 U	1.2 U	1.3 U
n-Propylbenzene	11,000			1.2 U	1.2 U	1.5 U	1.1 U	1.3 U	1.0 U	1.6 U	1.2 U	1.4 U	1.3 U	1.2 U	1.3 U
4-Isopropyltoluene	---			1.2 U	1.2 U	1.5 U	1.1 U	1.3 U	1.0 U	1.6 U	1.2 U	1.4 U	1.3 U	1.2 U	1.3 U
n-Butylbenzene	27,000			1.2 U	1.2 U	1.5 U	1.1 U	1.3 U	1.0 U	1.6 U	1.2 U	1.4 U	1.3 U	1.2 U	1.3 U
Naphthalene	2,100			5.9 U	6.2 U	7.3 U	5.5 U	6.5 U	5.1 U	7.8 U	5.9 U	7.2 U	6.4 U	5.9 U	6.6 U
SEMIVOLATILES (µg/kg)															
Method SW8270D															
Phenol	1,900,000			19 U	18 U	18 U	19 U	18 U	18 U	19 U	19 U	19 U	18 U	**280**	19 U
Benzyl Alcohol	8,000,000			19 U	18 U	18 U	19 U	18 U	18 U	19 U	19 U	19 U	18 U	18 U	19 UJ
4-Methylphenol	41,000			38 U	36 U	37 U	38 U	36 U	36 U	38 U	38 U	38 U	35 U	**20** J1	37 U
2,4-Dimethylphenol	95,000			38 UJ	36 UJ	37 UJ	38 UJ	36 UJ	36 UJ	38 UJ	38 UJ	38 U	35 U	37 U	37 U
Benzoic Acid	9,000			380 UJ	360 UJ	370 UJ	380 UJ	360 UJ	360 UJ	380 UJ	380 UJ	380 U	350 U	370 U	370 U
Naphthalene	2,100			**20**	**12** J1	18 U	19 U	**15** J1	18 U	19 U	19 U	19 U	18 U	18 U	19 U
2-Methylnaphthalene	320,000			**16** J1	18 U	18 U	19 U	**14** J1	18 U	19 U	19 U	19 U	18 U	18 U	19 U
Acenaphthylene	---			**26**	18 U	18 U	19 U	**9.0** J1	18 U	19 U	19 U	**16** J1	18 U	18 U	19 U
Acenaphthene	230,000			**9.4** J1	18 U	18 U	19 U	18 U	18 U	19 U	19 U	19 U	18 U	18 U	19 U
Dibenzofuran	80,000			19 U	18 U	18 U	19 U	18 U	18 U	19 U	19 U	19 U	18 U	18 U	19 U
Fluorene	150,000			19 U	18 U	18 U	19 U	18 U	18 U	19 U	19 U	19 U	18 U	18 U	19 U
Phenanthrene	---			**90**	**35**	18 U	19 U	**44**	**23**	19 U	19 U	**98**	**28**	**13** J1	19 U
Carbazole	50,000			19 UJ	18 UJ	18 UJ	19 UJ	18 UJ	18 UJ	19 UJ	19 U	19 U	18 U	18 U	19 U
Anthracene	1,600,000			**20**	18 U	18 U	19 U	**12** J1	18 U	19 U	19 U	19 U	18 U	18 U	19 U
Di-n-Butylphthalate	26,000			**200**	**18**	18 U	19 U	18 U	**24**	19 U	19 U	**52**	18 U	18 U	19 U
Fluoranthene	230,000			**120**	**31**	18 U	19 U	**50**	**19**	19 U	19 U	**110**	**14** J1	18 U	19 U
Pyrene	240,000			**130**	**42**	18 U	19 U	**63**	**24**	19 U	19 U	**120**	**22**	18 U	19 U
Benzo(a)anthracene	---			**64**	**19**	18 U	19 U	**26**	**12** J1	19 U	19 U	**40**	**12** J1	18 U	19 U
bis(2-Ethylhexyl)phthalate	56,600			33 U	33 U	23 U	26 U	23 U	24 U	24 U	24 U	24 U	**15** J1	**58**	**17** J1
Chrysene	---			**81**	**30**	18 U	19 U	**40**	**16** J1	19 U	19 U	**74**	**35**	18 U	19 U
Benzo(a)pyrene	---			**86**	**31**	18 U	19 U	**34**	**21**	19 U	19 U	**96**	**16** J1	18 U	19 U
Indeno(1,2,3-cd)pyrene	---			**64**	**19**	18 U	19 U	**25**	**18**	19 U	19 U	**130**	18 U	18 U	19 U
Dibenz(a,h)anthracene	---			**17** J1	18 U	18 U	19 U	18 U	18 U	19 U	19 U	**19**	18 U	18 U	19 U
Benzo(g,h,i)perylene	---			**100**	**30**	18 U	19 U	**42**	**26**	19 U	19 U	**280**	**26**	18 U	19 U
1-Methylnaphthalene	16,000			**13** J1	18 U	18 U	19 U	18 U	18 U	19 U	19 U	19 U	18 U	18 U	19 U
Total Benzofluoranthenes	---			**130**	**46**	18 U	19 U	**56**	**29**	19 U	19 U	**150**	**26**	**9.2** J1	19 U
cPAH TEQ	15			**114** J	**40**	ND	ND	**45**	**27** J	ND	ND	**131**	**20** J	**0.92** J	ND

TABLE Q-2
SOIL ANALYTICAL DETECTS
NORTH OF FORMER SLIP 5 AREA
BOEING ISAACSON-THOMPSON
REMEDIAL INVESTIGATION

		Former Slip 5 Outfall Area													
	Preliminary Cleanup Levels	18 (2) 8/1/1983	18 (6.5) 8/1/1983	IT-SB-6(2-3.5) TU90H 11/01/2011	IT-SB-6(5-6.5) TU90I 11/01/2011	IT-SB-6(8-9.5) TU90J 11/01/2011	IT-SB-6(13.5-15) TU90K 11/01/2011	IT-SB-7(2-3.5) TU90L 11/01/2011	IT-SB-7(5-6.5) TU90M 11/01/2011	IT-SB-7(8-9.5) TU90N 11/01/2011	IT-SB-7(13-14.5) TU90O 11/01/2011	IT-SB-8(2-3.5) TX01F 11/14/2011	IT-SB-8(5-6.5) TX01G 11/14/2011	IT-SB-8(8-9.5) TX01H 11/14/2011	IT-SB-8(14-15.5) TX01I 11/14/2011
PAHs (µg/kg)															
Method SW8270D-SIM															
Naphthalene	2,100			20	5.9	4.8 U	4.6 U	14	4.9	4.6 U	2.7 J1	210	9.2	4.5 U	4.6 U
2-Methylnaphthalene	320,000			19	6.2	4.8 U	4.6 U	12	5.2	4.6 U	2.4 J1	180	13	4.5 U	2.6 J1
1-Methylnaphthalene	16,000			15	4.9	4.8 U	4.6 U	8.2	3.2 J1	4.6 U	4.5 U	220	9.2	4.5 U	4.6 U
Total Naphthalenes	---			54	17	4.8 U	4.6 U	34.2	13.3 J1	4.6 U	5.1 J1	610	31.4	4.5 U	2.6 J1
Acenaphthylene	---			28	6.3	4.8 U	4.6 U	8.8	4.5 U	4.6 U	4.5 U	620	6.2	4.5 U	4.6 U
Acenaphthene	230,000			7.8	4.6	4.8 U	4.6 U	9.4	2.3 J1	4.6 U	4.5 U	110	8.4	4.5 U	4.6 U
Fluorene	150,000			8.8	4.4 J1	4.8 U	4.6 U	7.7	4.5 U	4.6 U	4.5 U	560	3.7 J1	4.5 U	4.6 U
Phenanthrene	---			120	51	4.8 U	4.6 U	83	15	2.4 J1	4.8	5700	86	4.5 U	4.2 J1
Anthracene	1,600,000			20	8.4	4.8 U	4.6 U	14	2.9 J1	4.6 U	4.5 U	370	8.8	4.5 U	4.6 U
Fluoranthene	230,000			140	54	4.8 U	4.6 U	87	24	4.6 U	4.5 U	4900	60	4.5 U	3.4 J1
Pyrene	240,000			150	59	4.8 U	4.6 U	100	23	4.6 U	4.5 U	4700	63	4.5 U	3.5 J1
Benzo(a)anthracene	---			65	27	4.8 U	4.6 U	48	16	4.6 U	4.5 U	1400	28	4.5 U	2.4 J1
Chrysene	---			86	32	4.8 U	4.6 U	60	18	4.6 U	4.5 U	2000	51	4.5 U	3.3 J1
Benzo(a)pyrene	---			100	40	4.8 U	4.6 U	85	17	4.6 U	4.5 U	1900	37	4.5 U	4.6 U
Indeno(1,2,3-cd)pyrene	---			67	23	4.8 U	4.6 U	52	8.8	4.6 U	4.5 U	1100	40	4.5 U	4.6 U
Dibenz(a,h)anthracene	---			24	9.6	4.8 U	4.6 U	17	4.5 U	4.6 U	4.5 U	300	11	4.5 U	4.6 U
Benzo(g,h,i)perylene	---			100	32	4.8 U	4.6 U	73	10	4.6 U	4.5 U	1400	82	4.5 U	4.6 U
Dibenzofuran	80,000			8.4	4.5 U	4.8 U	4.6 U	4.5 J1	4.5 U	4.6 U	4.5 U	270	3.8 J1	4.5 U	4.6 U
Total Benzofluoranthenes	---			140	56	4.8 U	4.6 U	110	29	4.6 U	4.5 U	2800	51	4.5 U	4.6 U
cPAH TEQ	15			130	52	ND	ND	108	23	ND	ND	2480	51	ND	0.3 J
PCBs (µg/kg)															
Method SW8082															
Aroclor 1254	0.29			33 U	32 U	32 U	32 U	31 U	31 U	30 U	33 U	31 U	31 U	32 U	31 U
Aroclor 1260	5.4			56 P	32 U	32 U	32 U	31 U	31 U	30 U	33 U	31 U	31 U	32 U	31 U
Total PCBs	1.8			56 P	ND	ND	ND	ND	ND	ND	ND	ND	ND	ND	ND
TOTAL PETROLEUM HYDROCARBONS (mg/kg)															
NWTPH-HCID															
Lube Oil	---														
NWTPH-Dx															
Diesel-Range Organics	2,000			35	10	5.8 U	6.2 U	21	6.7	5.8 U	6.6 U	13	23	5.7 U	6.4 U
Oil-Range Organics	2,000			90	29	12 U	12 U	41	14	12 U	13 U	34	170	12 U	13 U
NWTPH-G															
Gasoline-Range Organics	100/30			7.3 U	7.4 U	8.6 U	7.4 U	7.0 U	6.0 U	7.6 U	8.5 U	7.2 U	20	6.7 U	8.0 U
TOTAL METALS (mg/kg)															
Methods 200.8/7471A/SW7196A															
Antimony	5			0.2 U	0.2 U	0.2 U	0.2 U	0.2 U	0.2 U	0.2 U	0.3 U	0.2 U	0.2 U	0.2 U	0.2 U
Barium	640	30	25	54.3	40.1	48.7	32.1	54.2	46.6	34.0	60.7	104	46.1	41.6	46.5
Beryllium	160			0.2 U	0.2 U	0.2 U	0.2 U	0.2 U	0.2 U	0.2 U	0.3 U	0.2	0.2 U	0.2 U	0.2 U
Cadmium	1.3	0.6	0.31	0.4	1.9	0.1 U	0.1 U	0.1 U	0.2	0.1 U	0.1 U	0.3	0.1 U	0.1 U	0.1 U
Chromium	1,480	16	11.5	14.6	13.1	11.9	15.1	12.5	14.5	10.0	16.2	18.6	12.8	12.7	15.5
Chromium VI	3.8			0.461 U	0.444 U	0.457 U	0.513 U	0.447 U	0.444 U	0.449 U	0.530 U	0.467 U	0.448 U	0.449 U	0.501 U
Copper	36			53.9	23.2	17.7	9.6	29.7	19.4	12.0	17.5	30.0	17.4	12.1	16.7
Lead	250	73	5.5	53.9	15.3	2.1	12.0	16.7	14.7	1.5	2.7	153	5.1	6.2	2.1
Mercury	1.5	0.03	0.04	0.17	0.04	0.02	0.03 U	0.08	0.13	0.02 U	0.03	0.09	0.03	0.02 U	0.03
Nickel	210	20	8.5	73.3	20.2	9.6	7.8	11.3	10.8	8.2	11.8	12.2	11.6	9.3	8.1
Silver	170	0.3 U	0.3 U	0.2 U	0.2 U	0.2 U	0.2 U	0.2 U	0.2 U	0.2 U	0.3 U	0.3	0.2 U	0.2 U	0.2 U
Zinc	1,400	81	33.7	231	57	52	73	59	61	22	52	90	45	101	48
CONVENTIONALS (mg/kg)															
Oil and Grease	---	107	57 U												
Total Organic Carbon	---														

TABLE Q-2
SOIL ANALYTICAL DETECTS
NORTH OF FORMER SLIP 5 AREA
BOEING ISAACSON-THOMPSON
REMEDIAL INVESTIGATION

µg/kg = micrograms per kilogram
mg/kg = milligrams per kilogram
TEQ = Toxic Equivalent Concentration
SIM = Select Ion Monitoring
cPAH = Carcinogenic Polycyclic Aromatic Hydrocarbons
PCB = Polychlorinated Biphenyls
NWTPH-Dx = Total Petroleum Hydrocarbon-Diesel Range
NWTPH-G = Total Petroleum Hydrocarbon-Gasoline Range
NWTPH-HCID = Total Petroleum Hydrocarbon-Hydrocarbon Identification Method
U = Indicates the compound was not detected at or above the reporting limit.
UJ = The analyte was not detected in the sample; the reported sample reporting limit is an estimate.
J = Indicates the analyte was positively identified; the associated numerical value is the approximate concentration of the analyte in the sample.
J1 = Laboratory flag indicating the analyte was positively identified; the associated concentration is approximate and less than the reporting limit, but equal to or greater than the detection limit.
UJ2 = The analyted was not detected in the sample at or above the numerical value shown; the numerical value is below the reporting limit, but greater than the detection limit.
ND = Not Detected.
Bold = Detection
Box = Exceeds Preliminary Cleanup Level.

TABLE Q-3
HISTORICAL ARSENIC SOIL ANALYTICAL RESULTS
FORMER SLIP 5 AREA
BOEING ISAACSON-THOMPSON

Sample ID	Sample Date	Sample Depth	Arsenic (mg/kg)
			pCUL = 7
FILL A: 1900-1946 Random Fill, Consisting of Gravel, Sand, Slag, Demolition Waste, and Crushed Rocks			
215	1/15/88	3.5-4	5
215	1/15/88	8.5-9	1
215	1/15/88	13.5-14	1
6J	1991	3-5	120 (a)
6J	1991	5-9	4000 (a)
MW-14	11/8/2011	2-3.5	2.4
MW-14	11/8/2011	5-6.5	4.7
MW-14	11/8/2011	8-9.5	7.2
MW-14	11/8/2011	13-14.5	1.6
FILL B: 1946-1960 Random Fill Material			
MW-9	10/31/11	2-3.5	2.5
MW-9	10/31/11	5-6.5	6.2
MW-9	11/4/11	8-9.5	11.1
MW-9	11/4/11	13-14.5	2.5
MW-10	10/31/11	2-3.5	4.6
MW-10	10/31/11	5-6.5	1.6
MW-10	11/7/11	8-9.5	2.2
MW-10	11/7/11	13.5-15	209
TP-106-B	10/28/11	11-12	4.2
IT-TOWPATHEXC1-B	7/15/11	0.8	3.6
Vicinity of I-205(s)			
I-205s	1/19/88	2.5	3
I-205s	1/19/88	12.5	9
I-205s-Dup	1/19/88	12.5	3
I-205s	1/19/88	17.5	6
I-205s	1/19/88	27.5	393
TP-104-B	10/27/11	12-13	2.0
TP-105-B	10/27/11	11-12	2.3
Hydraulic Test Pad Area			
TDP31	11/6/08	12	9
MW-11	10/31/11	2-3.5	6.6
MW-11	10/31/11	5-6.5	2.9
MW-11	11/7/11	8-9.5	7.8
MW-11	11/7/11	13.5-15	3.7
Hazardous Waste/Hazardous Materials Sheds			
237	1/21/88	3.5	5
237	1/29/88	8.5	4
237	1/29/88	15	3
TDP27	11/6/08	11	6
TDP28	11/6/08	11	6
TDP29	11/6/08	11	8
TDP30	11/6/08	11	13

TABLE Q-3
HISTORICAL ARSENIC SOIL ANALYTICAL RESULTS
FORMER SLIP 5 AREA
BOEING ISAACSON-THOMPSON

Sample ID	Sample Date	Sample Depth	Arsenic (mg/kg)
			pCUL = 7
Transformers			
SB-2	10/31/11	2-3.5	1.7
SB-2	10/31/11	5-6.5	2.3
SB-2	10/31/11	8-9.5	1.8
SB-2	10/31/11	14-15.5	1.7
FILL C: 1946-1960 Some Random Fill Along with Fill From Off-Site Sources			
5	8/1/83	2.5	33
6-3	8/1/83	1	18
7-1	8/1/83	2.5	12
7-5	8/1/83	8.5	10
7-5	8/1/83	13.5	7
7-5	8/1/83	18.5	25
15	8/1/83	2.5	15
15-Dup	8/1/83	2	11
16	8/1/83	2.5	9.5
16	8/1/83	6.5	5.3
17	8/1/83	2.5	16
17-Dup	8/1/83	2.5	19
17	8/1/83	6.5	7.4
19	8/1/83	1.5	8.9
19	8/1/83	3.5	17
19	8/1/83	9	36
I-6	10/19/83	10	79
I-7	10/20/83	3	30
I-7	10/20/83	5	2.3
228	1/19/88	3.5-4	37
228	1/19/88	8.5-9	12
228	1/19/88	13-13.5	11
228	1/19/88	17-17.5	12
232	1/19/88	3.5-4	44
232	1/19/88	8.5-9	47
232	1/19/88	13.5-14	92
236	1/20/88	3.5	13
236	1/20/88	8.5	48
236	1/20/88	13.5	41
236	1/20/88	18.5	24
244	1/21/88	3.5	25
244	1/21/88	8.5	4
244	1/21/88	13.5	5
I-202s	1/14/88	2.5	5
I-202s	1/14/88	7.5	33
I-202s	1/14/88	12.5	54
I-202s	1/14/88	17.5	191
I-202s	1/14/88	27.5	27

TABLE Q-3
HISTORICAL ARSENIC SOIL ANALYTICAL RESULTS
FORMER SLIP 5 AREA
BOEING ISAACSON-THOMPSON

Sample ID	Sample Date	Sample Depth	Arsenic (mg/kg)
			pCUL = 7
FILL C: 1946-1960 Some Random Fill Along with Fill From Off-Site Sources (cont.)			
I-203i	1/15/88	2.5	17
I-203i	1/15/88	7.5	26
I-203i	1/28/88	10	27
I-203i	1/15/88	12.5	22
I-203i	1/28/88	15	47
I-203i	1/28/88	18	10
I-203i	1/28/88	23	59
I-203i	1/28/88	33	11
I-203i	1/28/88	43	2
I-203i	1/28/88	48	2
8J	1991	5-9	20 (a)
31D	1991	1-3	10 (a)
31D	1991	3-5	20 (a)
31D	1991	5-9	170 (a)
PBI-3	7/27/09	2	8.4
PBI-3	7/27/09	5	754
PBI-3	7/27/09	8	4.8
PBI-4	7/27/09	2	6.2
PBI-4	7/27/09	5	6.9
PBI-4	7/27/09	8	75.4
PBI-5	7/27/09	2	9.3
PBI-5	7/27/09	5	6.4
PBI-5	7/27/09	8	6.7
PBI-6	7/27/09	2	2.7
PBI-6	7/27/09	5	185
PBI-6	7/27/09	8	74
PBI-7	7/27/09	2	6.2
PBI-7	7/27/09	5	14.7
PBI-7	7/27/09	8	0.5 J
PBI-8	7/27/09	2	23.4
PBI-8	7/27/09	5	4.8
PBI-8	7/27/09	8	7
PBI-9	7/27/09	2	1.4
PBI-9	7/27/09	5	8.6
PBI-9	7/27/09	8	6.3
PBI-10	7/27/09	2	4.7
PBI-10	7/27/09	5	6.3
PBI-10	7/27/09	8	32.7
MW-13	11/3/11	2-3.5	2.7
MW-13	11/3/11	5-6.5	3.1
MW-13	11/3/11	8-9.5	2.7
MW-13	11/3/11	12.5-14	24.4
MW-13	11/3/11	15-16.5	19.5
MW-13B	11/10/11	2-3.5	3.8
MW-13B	11/10/11	5-6.5	2.5
MW-13B	11/11/11	6.5-8	7.2
MW-13B	11/11/11	8-9.5	12.1
MW-13B	11/11/11	12.5-13.5	8.9

TABLE Q-3
HISTORICAL ARSENIC SOIL ANALYTICAL RESULTS
FORMER SLIP 5 AREA
BOEING ISAACSON-THOMPSON

Sample ID	Sample Date	Sample Depth	Arsenic (mg/kg)
			pCUL = 7
FILL C: 1946-1960 Some Random Fill Along with Fill From Off-Site Sources (cont.)			
MW-17	11/10/11	2-3.5	10.5
MW-17	11/10/11	5-6.5	29.3
MW-17	11/10/11	8-9.5	31.5
MW-17	11/10/11	11-12.5	13.9
MW-17	11/10/11	14-15.5	60.3
MW-17	11/10/11	15.5-17	299
MW-17	11/10/11	18.5-19.75	76.4
MW-17	11/10/11	21.25-21.5	33.9
MW-17	11/10/11	21.5-23	78.5
MW-19	11/9/11	2-3.5	3.4
MW-19	11/9/11	5-6.5	13.1
MW-19	11/9/11	8-9.5	7.5
MW-19	11/9/11	13-14.5	10.5
SB-3	11/8/11	2-3.5	2.7
SB-3	11/14/11	5-5.5	4.0
SB-3	11/14/11	6.5-7	40.1
SB-4	11/1/11	2-3.5	9.7
SB-4	11/1/11	5-6.5	7.6
SB-4	11/1/11	8-9	4.8
SB-4	11/1/11	11.5-13	1.9
SB-12	11/14/11	2-3.5	12.3
SB-12	11/14/11	5-6.5	10.4
SB-12	11/14/11	8-9.5	9.2
SB-12	11/14/11	14-15.5	24.6
TOWPATH-EXC12-B	7/26/11	2.7	2.2
FILL D: 1960-1965 Slag, Construction, Demolition Debris, and Imported Soil			
22	8/1/83	4	6.7
22	8/1/83	6.5	8.7
IT-PIVEXC1-B	8/8/11	4.2	2.5
SB-5	10/31/11	2-3.5	16.9
SB-5	10/31/11	5-6.5	5.9
SB-5	10/31/11	8-9.5	4.3
SB-5	10/31/11	16-17.5	1.2
FILL E: 1965-1966 Imported Construction-Quality Sand Fill Material			
224	1/20/88	2.5-3	7
224	1/20/88	7.5-8	12
224	1/20/88	12.5-13	44
224	1/20/88	17.5-18	39
224	1/20/88	18-18.5	2
230	1/21/88	2.5-3	3
230	1/21/88	7.5-8	2
230	1/21/88	12.5-13	33
230	1/21/88	15-15.5	17
233	1/21/88	3.5-4	2
233	1/21/88	8.5-9	82
233	1/28/88	10-10.5	46
SB-2	10/31/11	2-3.5	1.7
SB-2	10/31/11	5-6.5	2.3
SB-2	10/31/11	8-9.5	1.8
SB-2	10/31/11	14-15.5	1.7
B-20	1983	4	5.3
B-20	1983	10.5	9.2
B-20	1983	14	18.0

TABLE Q-3
HISTORICAL ARSENIC SOIL ANALYTICAL RESULTS
FORMER SLIP 5 AREA
BOEING ISAACSON-THOMPSON

Sample ID	Sample Date	Sample Depth	Arsenic (mg/kg)
			pCUL = 7
MW-12	11/3/11	2-3.5	1.9
MW-12	11/3/11	5-6.5	1.4
MW-12	11/3/11	8-9.5	2.3
MW-12	11/3/11	13-14.5	1.7
MW-12	11/3/11	18-19.5	92
MW-12	11/3/11	23-24.5	22.7

mg/kg = milligrams per kilogram
J = Indicates the analyte was positively identified; the associated numerical value is the approximate concentration of the analyte in the sample.
pCUL = Preliminary Cleanup Level
Box = Exceeds Preliminary Cleanup Level

(a) = Field sample results

TABLE Q-4
SOIL ANALYTICAL DETECTS
FORMER SLIP 5 AREA
BOEING ISAACSON-THOMPSON
REMEDIAL INVESTIGATION

		FILL A: 1900-1946 Random Fill Consisting of Gravel, Sand, Slag, Demolition Waste, and Crushed Rocks							FILL B: 1946-1960 Random Fill Material				
											Dup of I-205s		
	Preliminary Cleanup Levels	215 (3.5-4) 1/15/1988	215 (8.5-9) 1/15/1988	215 (13.5-14) 1/15/1988	IT-MW-14(2-3.5) TW27J 11/08/2011	IT-MW-14(5-6.5) TW27K 11/08/2011	IT-MW-14(8-9.5) TW27L 11/08/2011	IT-MW-14(13-14.5) TW27M 11/08/2011	I-205s (2.5) 1/19/1988	I-205s (12.5) 1/19/1988	I-205s-Dup (12.5) 1/19/1988	I-205s (17.5) 1/19/1988	I-205s (27.5) 1/19/1988
VOLATILES (µg/kg)													
Method SW8260C													
Methylene Chloride	2,400				**2.6**	**2.7**	**2.9**	**4.5**					
Acetone	510,000				**15** J	**65** J	**25** J	**23** J					
Carbon Disulfide	75,000				**1.7**	1.2 U	1.3 U	**12**					
1,1-Dichloroethane	710				1.0 UJ	1.2 UJ	1.3 UJ	1.5 UJ					
trans-1,2-Dichloroethene	19,000				1.0 U	1.2 U	1.3 U	1.5 U					
cis-1,2-Dichloroethene	2,600				1.0 U	1.2 U	1.3 U	1.5 U					
2-Butanone	430,000				5.0 U	**3.3** J1	6.3 U	7.4 U					
Bromodichloromethane	89				1.0 U	1.2 U	1.3 U	1.5 U					
Trichloroethene	51				1.0 U	1.2 U	1.3 U	1.5 U					
Benzene	93				1.0 U	1.2 U	1.3 U	1.5 U					
trans-1,3-Dichloropropene	---				1.0 U	1.2 U	1.3 U	1.5 U					
4-Methyl-2-Pentanone (MIBK)	170,000				5.0 U	6.0 U	6.3 U	7.4 U					
Toluene	100,000				1.0 U	1.2 U	1.3 U	1.5 U					
Ethylbenzene	230				1.0 U	1.2 U	1.3 U	1.5 U					
Trichlorofluoromethane	200,000				1.0 U	1.2 U	1.3 U	1.5 U					
1,1,2-Trichloro-1,2,2-trifuoroethane	1,000,000,000				2.0 U	2.4 U	2.5 U	3.0 U					
m,p-Xylene	160,000				1.0 U	1.2 U	1.3 U	1.5 U					
o-Xylene	200,000				1.0 U	1.2 U	1.3 U	1.5 U					
1,2-Dichlorobenzene	68,000				1.0 U	1.2 U	1.3 U	1.5 U					
Methyl Iodide	---				1.0 U	1.2 U	1.3 U	1.5 U					
1,3,5-Trimethylbenzene	800,000				1.0 U	1.2 U	1.3 U	1.5 U					
1,2,4-Trimethylbenzene	800,000				1.0 U	1.2 U	1.3 U	1.5 U					
Isopropylbenzene	78,000				1.0 U	1.2 U	1.3 U	1.5 U					
n-Propylbenzene	11,000				1.0 U	1.2 U	1.3 U	1.5 U					
tert-Butylbenzene	---				1.0 U	1.2 U	1.3 U	1.5 U					
sec-Butylbenzene	---				1.0 U	1.2 U	1.3 U	1.5 U					
4-Isopropyltoluene	---				1.0 U	1.2 U	1.3 U	1.5 U					
n-Butylbenzene	27,000				1.0 U	1.2 U	1.3 U	1.5 U					
Naphthalene	2,100				5.0 U	6.0 U	6.3 U	7.4 U					
1,2-Dichloroethene (total)	---												
Total Xylenes	200,000												
SEMIVOLATILES (µg/kg)													
Method SW8270D													
Phenol	1,900,000				57 U	55 U	56 U	20 U					
1,3-Dichlorobenzene	3,840				57 U	55 U	56 U	20 U					
1,4-Dichlorobenzene	3,500				57 U	55 U	56 U	20 U					
Benzyl Alcohol	8,000,000				57 U	55 U	56 U	20 U					
1,2-Dichlorobenzene	68,000				57 U	55 U	56 U	20 U					
2-Methylphenol	250,000				57 U	55 U	56 U	20 U					
4-Methylphenol	41,000				110 U	110 U	110 U	39 U					
Isophorone	---				57 U	55 U	56 U	20 U					
2,4-Dimethylphenol	95,000				110 U	110 U	110 U	39 U					
Benzoic Acid	9,000				1100 U	1100 U	1100 U	390 U					
Naphthalene	2,100				57 U	55 U	56 U	20 U					
2-Methylnaphthalene	320,000				57 U	55 U	56 U	20 U					
Acenaphthylene	---				57 U	55 U	56 U	20 U					
Acenaphthene	230,000				57 U	55 U	56 U	20 U					
Dibenzofuran	80,000				57 U	55 U	56 U	20 U					
Fluorene	150,000				57 U	55 U	56 U	20 U					

TABLE Q-4
SOIL ANALYTICAL DETECTS
FORMER SLIP 5 AREA
BOEING ISAACSON-THOMPSON
REMEDIAL INVESTIGATION

		FILL A: 1900-1946 Random Fill Consisting of Gravel, Sand, Slag, Demolition Waste, and Crushed Rocks							FILL B: 1946-1960 Random Fill Material				
											Dup of I-205s		
	Preliminary Cleanup Levels	215 (3.5-4) 1/15/1988	215 (8.5-9) 1/15/1988	215 (13.5-14) 1/15/1988	IT-MW-14(2-3.5) TW27J 11/08/2011	IT-MW-14(5-6.5) TW27K 11/08/2011	IT-MW-14(8-9.5) TW27L 11/08/2011	IT-MW-14(13-14.5) TW27M 11/08/2011	I-205s (2.5) 1/19/1988	I-205s (12.5) 1/19/1988	I-205s-Dup (12.5) 1/19/1988	I-205s (17.5) 1/19/1988	I-205s (27.5) 1/19/1988
N-Nitrosodiphenylamine	204,000				57 U	55 U	56 U	20 U					
Phenanthrene	---				**31** J1	**53** J1	**39** J1	20 U					
Carbazole	50,000				57 U	55 U	56 U	20 U					
Anthracene	1,600,000				57 U	55 U	56 U	20 U					
Di-n-Butylphthalate	26,000				57 U	55 U	56 U	20 U					
Fluoranthene	230,000				57 U	**50** J1	**28** J1	20 U					
Pyrene	240,000				**34** J1	**78**	**31** J1	20 U					
Butylbenzylphthalate	1,700				57 U	55 U	56 U	20 U					
Benzo(a)anthracene	---				57 U	**39** J1	**34** J1	20 U					
bis(2-Ethylhexyl)phthalate	56,600				71 U	**58** J1	**56** J1	**23** J1					
Chrysene	---				**71**	**86**	**65**	20 U					
Di-n-Octyl phthalate	---				57 U	55 U	56 U	20 U					
Benzo(a)pyrene	---				57 U	**42** J1	56 U	20 U					
Indeno(1,2,3-cd)pyrene	---				57 U	55 U	56 U	20 U					
Dibenz(a,h)anthracene	---				57 U	55 U	56 U	20 U					
Benzo(g,h,i)perylene	---				57 U	55 U	56 U	20 U					
1-Methylnaphthalene	16,000				57 U	55 U	56 U	20 U					
Total Benzofluoranthenes	---				57 U	**69**	**37** J1	20 U					
cPAH TEQ	15				**0.71**	**54** J	**8** J	ND					
PAHs (µg/kg)													
Method SW8270D-SIM													
Naphthalene	2,100				14 U	**9.0** J1	**10** J1	**2.7** J1					
2-Methylnaphthalene	320,000				14 U	**14** J1	**12** J1	**2.6** J1					
1-Methylnaphthalene	16,000				14 U	**13** J1	**10** J1	4.9 U					
Total Naphthalenes	---				14 U	**36.0** J1	**32** J1	**5.3** J1					
Acenaphthylene	---				14 U	14 U	12 U	4.9 U					
Acenaphthene	230,000				14 U	14 U	12 U	4.9 U					
Fluorene	150,000				14 U	**11** J1	12 U	4.9 U					
Phenanthrene	---				**12** J1	**40**	**28**	**2.8** J1					
Anthracene	1,600,000				14 U	**12** J1	12 U	4.9 U					
Fluoranthene	230,000				**8.2** J1	**30**	**16**	4.9 U					
Pyrene	240,000				**10** J1	**40**	**19**	4.9 U					
Benzo(a)anthracene	---				14 U	**34**	**13**	4.9 U					
Chrysene	---				**22**	**120**	**39**	**2.4** J1					
Benzo(a)pyrene	---				**9.6** J1	**26**	**15**	4.9 U					
Indeno(1,2,3-cd)pyrene	---				14 U	**14** J1	12 U	4.9 U					
Dibenz(a,h)anthracene	---				14 U	**19**	12 U	4.9 U					
Benzo(g,h,i)perylene	---				14 U	**26**	**17**	4.9 U					
Dibenzofuran	80,000				14 U	14 U	12 U	4.9 U					
Total Benzofluoranthenes	---				14 U	**41**	**24**	4.9 U					
cPAH TEQ	15				**9.8**	**38**	**19**	**0.024**					
PCBs (µg/kg)													
Method SW8082													
Aroclor 1242	0.72				32 U	32 U	33 U	31 U					
Aroclor 1248	220				32 U	32 U	33 U	31 U					
Aroclor 1254	0.29				32 U	32 U	33 U	31 U					
Aroclor 1260	5.4				32 U	32 U	33 U	31 U					
Total PCBs	1.8				ND	ND	ND	ND					

TABLE Q-4
SOIL ANALYTICAL DETECTS
FORMER SLIP 5 AREA
BOEING ISAACSON-THOMPSON
REMEDIAL INVESTIGATION

		FILL A: 1900-1946 Random Fill Consisting of Gravel, Sand, Slag, Demolition Waste, and Crushed Rocks							FILL B: 1946-1960 Random Fill Material				
											Dup of I-205s		
	Preliminary Cleanup Levels	215 (3.5-4) 1/15/1988	215 (8.5-9) 1/15/1988	215 (13.5-14) 1/15/1988	IT-MW-14(2-3.5) TW27J 11/08/2011	IT-MW-14(5-6.5) TW27K 11/08/2011	IT-MW-14(8-9.5) TW27L 11/08/2011	IT-MW-14(13-14.5) TW27M 11/08/2011	I-205s (2.5) 1/19/1988	I-205s (12.5) 1/19/1988	I-205s-Dup (12.5) 1/19/1988	I-205s (17.5) 1/19/1988	I-205s (27.5) 1/19/1988
TOTAL PETROLEUM HYDROCARBONS (mg/kg)													
NWTPH-HCID													
Diesel-Range Organics	---												
Gasoline-Range Organics	---												
Lube Oil	---												
NWTPH-Dx													
Diesel-Range Organics	2,000				**38**	**76**	**52**	6.2 U					
Oil-Range Organics	2,000				**290**	**460**	**250**	12 U					
NWTPH-G													
Gasoline-Range Organics	100/30				5.7 U	7.0 U	8.0 U	9.0 U					
C19 Branched Hydrocarbon	---												
C11 Hydrocarbon	---												
C18-C25 Hydrocarbons (total)	---												
TOTAL METALS (mg/kg)													
Methods 200.8/7471A/SW7196A													
Antimony	5				0.2 U	0.2 U	0.2 U	0.3 U					
Barium	640				**42.3**	**50.6**	**60.5**	**26.4**					
Beryllium	160				0.2 U	0.2 U	0.2 U	0.3 U					
Cadmium	1.3				**0.1**	**0.2**	**0.1**	**0.7**					
Chromium	1,480	**100**	**13**	**12**	**20.0**	**14.7**	**16.1**	**18.9**	**20**	**25**	**18**	**23**	**42**
Chromium VI	3.8				0.445 U	0.489 U	0.488 U	0.520 U					
Copper	36	**27**	**9**	**7**	**37.1**	**23.7**	**29.0**	**42.8**	**19**	**15**	**10**	**18**	**71**
Lead	250	**94**	3 U	3 U	**7.3**	**11.6**	**23.6**	**8.5**	**6**	4 U	4 U	**6**	**49**
Mercury	1.5				0.02 U	**0.05**	**0.05**	0.02 U					
Nickel	210	**15**	**8**	**7**	**30.0**	**16.0**	**13.6**	**5.7**	**10**	**13**	**10**	**15**	**20**
Selenium	1.0				0.6 U	0.6 U	0.6 U	0.6 U					
Silver	170				0.2 U	0.2 U	0.2 U	0.3 U					
Thallium	0.67				0.2 U	0.2 U	0.2 U	0.3 U					
Zinc	1,400	**184**	**24.7**	**20.9**	**48**	**59**	**94**	**80**	**33.2**	**47.8**	**34.9**	**53**	**122**
CONVENTIONALS (mg/kg)													
Cyanide	---												
Oil and Grease	---												

TABLE Q-4
SOIL ANALYTICAL DETECTS
FORMER SLIP 5 AREA
BOEING ISAACSON-THOMPSON
REMEDIAL INVESTIGATION

										Vicinity of I-205(s)		
		FILL B: 1946-1960 Random Fill Material										
	Preliminary Cleanup Levels	IT-MW-9(2-3.5) TU65P 10/31/2011	IT-MW-9(5-6.5) TU65C 10/31/2011	IT-MW-9(8-9.5) TV85C 11/04/2011	IT-MW-9(13-14.5) TV85D 11/04/2011	IT-MW-10(2-3.5) TU65D 10/31/2011	IT-MW-10(5-6.5) TU65E 10/31/2011	IT-MW-10(8-9.5) TV99G 11/07/2011	IT-MW-10(13.5-15) TV99H 11/07/2011	IT-TP-104-B(12-13) TU13A 10/27/2011	IT-TP-105B-B(11-12) TU13B 10/27/2011	IT-TP-106B(11-12) TU48J 10/28/2011
VOLATILES (µg/kg)												
Method SW8260C												
Methylene Chloride	2,400	**2.4** J, J1	**3.1** J	**10** J	**2.1** J	**2.7** J	**3.5** J	**2.3** J1	**2.9**	2.6 U	2.7 U	**12**
Acetone	510,000	**50**	**55**	**34**	11 U	**50**	7.1 U	**7.7**	**64**	**30** J	**36** J	**43** J
Carbon Disulfide	75,000	**1.8**	**1.7**	1.2 U	1.1 U	**1.2** J1	1.1 U	1.2 U	1.3 U	**4.7**	**4.2**	**3.4** J
1,1-Dichloroethane	710	1.2 U	1.1 U	1.2 UJ	1.1 UJ	1.3 U	1.1 U	1.2 U	1.3 U	1.3 U	1.3 U	1.5 U
trans-1,2-Dichloroethene	19,000	1.2 U	1.1 U	1.2 U	1.1 U	1.3 U	1.1 U	1.2 U	1.3 U	1.3 U	1.3 U	1.5 U
cis-1,2-Dichloroethene	2,600	1.2 U	1.1 U	1.2 U	1.1 U	1.3 U	1.1 U	1.2 U	1.3 U	1.3 U	1.3 U	1.5 U
2-Butanone	430,000	**7.1**	**5.9**	6.1 UJ	5.7 UJ	**4.6** J1	5.7 U	6.1 U	**5.1** J1	6.4 U	6.6 U	**5.0** J1
Bromodichloromethane	89	1.2 U	1.1 U	1.2 U	1.1 U	1.3 U	1.1 U	1.2 U	1.3 U	1.3 U	1.3 U	1.5 U
Trichloroethene	51	1.2 U	1.1 U	1.2 U	1.1 U	1.3 U	1.1 U	1.2 U	1.3 U	1.3 U	1.3 U	1.5 U
Benzene	93	**0.9** J1	1.1 U	1.2 U	1.1 U	**1.0** J1	1.1 U	1.2 U	1.3 U	1.3 U	1.3 U	1.5 U
trans-1,3-Dichloropropene	---	1.2 U	1.1 U	1.2 U	1.1 U	1.3 U	1.1 U	1.2 U	1.3 U	1.3 U	1.3 U	1.5 U
4-Methyl-2-Pentanone (MIBK)	170,000	6.1 U	5.7 U	6.1 U	5.7 U	6.3 U	5.7 U	6.1 U	6.7 U	6.4 U	6.6 U	7.3 U
Toluene	100,000	1.2 U	1.1 U	1.2 U	1.1 U	**1.1** J1	1.1 U	1.2 U	1.3 U	1.3 U	1.3 U	1.5 U
Ethylbenzene	230	1.2 U	1.1 U	1.2 U	1.1 U	1.3 U	1.1 U	1.2 U	1.3 U	1.3 U	1.3 U	1.5 U
Trichlorofluoromethane	200,000	1.2 U	1.1 U	1.2 U	1.1 U	1.3 U	1.1 U	1.2 U	1.3 U	1.3 U	1.3 U	1.5 U
1,1,2-Trichloro-1,2,2-trifuoroethane	1,000,000,000	2.4 U	2.3 U	2.4 U	2.3 U	2.5 U	2.3 U	2.5 U	2.7 U	2.6 U	2.7 U	2.9 UJ
m,p-Xylene	160,000	1.2 U	1.1 U	1.2 U	1.1 U	1.3 U	1.1 U	1.2 U	1.3 U	1.3 U	1.3 U	1.5 U
o-Xylene	200,000	1.2 U	1.1 U	1.2 U	1.1 U	1.3 U	1.1 U	1.2 U	1.3 U	1.3 U	1.3 U	1.5 U
1,2-Dichlorobenzene	68,000	1.2 U	1.1 U	1.2 U	1.1 U	1.3 U	1.1 U	1.2 U	1.3 U	1.3 U	1.3 U	1.5 UJ
Methyl Iodide	---	1.2 U	1.1 U	1.2 U	1.1 U	1.3 U	1.1 U	1.2 U	**0.8** J1	1.3 U	1.3 U	1.5 U
1,3,5-Trimethylbenzene	800,000	1.2 U	1.1 U	1.2 U	1.1 U	1.3 U	1.1 U	1.2 U	1.3 U	1.3 U	1.3 U	1.5 U
1,2,4-Trimethylbenzene	800,000	1.2 U	1.1 U	1.2 U	1.1 U	1.3 U	1.1 U	1.2 U	1.3 U	1.3 U	1.3 U	1.5 U
Isopropylbenzene	78,000	1.2 U	1.1 U	1.2 U	1.1 U	1.3 U	1.1 U	1.2 U	1.3 U	1.3 U	1.3 U	1.5 U
n-Propylbenzene	11,000	1.2 U	1.1 U	1.2 U	1.1 U	1.3 U	1.1 U	1.2 U	1.3 U	1.3 U	1.3 U	1.5 UJ
tert-Butylbenzene	---	1.2 U	1.1 U	1.2 U	1.1 U	1.3 U	1.1 U	1.2 U	1.3 U	1.3 U	1.3 U	1.5 UJ
sec-Butylbenzene	---	1.2 U	1.1 U	1.2 U	1.1 U	1.3 U	1.1 U	1.2 U	1.3 U	1.3 U	1.3 U	1.5 UJ
4-Isopropyltoluene	---	1.2 U	1.1 U	1.2 U	1.1 U	1.3 U	1.1 U	1.2 U	1.3 U	1.3 U	1.3 U	1.5 U
n-Butylbenzene	27,000	1.2 U	1.1 U	1.2 U	1.1 U	1.3 U	1.1 U	1.2 U	1.3 U	1.3 U	1.3 U	1.5 UJ
Naphthalene	2,100	**10**	**1.9** J1	6.1 U	5.7 U	6.3 U	5.7 U	6.1 U	6.7 U	6.4 U	6.6 U	7.3 U
1,2-Dichloroethene (total)	---											
Total Xylenes	200,000											
SEMIVOLATILES (µg/kg)												
Method SW8270D												
Phenol	1,900,000	18 U	19 U	18 U	18 U	19 U	18 U	20 U	**11** J1	19 U	20 U	19 U
1,3-Dichlorobenzene	3,840	18 U	19 U	18 U	18 U	19 U	18 U	20 U	19 U	19 U	20 U	19 U
1,4-Dichlorobenzene	3,500	18 U	19 U	18 U	18 U	19 U	18 U	20 U	19 U	19 U	20 U	19 U
Benzyl Alcohol	8,000,000	18 U	19 U	18 U	18 U	19 U	18 U	20 U	**19**	19 U	20 U	19 U
1,2-Dichlorobenzene	68,000	18 U	19 U	18 U	18 U	19 U	18 U	20 U	19 U	19 U	20 U	19 U
2-Methylphenol	250,000	18 U	19 U	18 U	18 U	19 U	18 U	20 U	19 U	19 U	20 U	19 U
4-Methylphenol	41,000	36 U	38 U	37 U	37 U	39 U	36 U	39 U	**62**	39 U	39 U	37 U
Isophorone	---	18 U	19 U	18 U	18 U	19 U	18 U	20 U	19 U	19 U	20 U	19 U
2,4-Dimethylphenol	95,000	36 U	38 U	37 U	37 U	39 U	36 U	39 U	39 U	39 U	39 U	37 U
Benzoic Acid	9,000	360 U	380 U	370 U	370 U	390 U	360 U	390 U	**180** J1	390 UJ	390 UJ	370 U
Naphthalene	2,100	**47**	**26**	**18** J1	18 U	19 U	18 U	20 U	**170**	19 U	20 U	**100**
2-Methylnaphthalene	320,000	**55**	**13** J1	**16** J1	18 U	19 U	18 U	20 U	**120**	19 U	20 U	**31**
Acenaphthylene	---	18 U	19 U	18 U	18 U	19 U	18 U	20 U	19 U	19 U	20 U	19 U
Acenaphthene	230,000	**90**	**200**	**13** J1	18 U	19 U	18 U	20 U	**85**	19 U	20 U	**82**
Dibenzofuran	80,000	**52**	**260**	**16** J1	18 U	19 U	18 U	20 U	**71**	19 U	20 U	**45**
Fluorene	150,000	**73**	**300**	18 U	18 U	19 U	18 U	20 U	**99** J	19 U	20 U	**84**

TABLE Q-4
SOIL ANALYTICAL DETECTS
FORMER SLIP 5 AREA
BOEING ISAACSON-THOMPSON
REMEDIAL INVESTIGATION

	Preliminary Cleanup Levels	FILL B: 1946-1960 Random Fill Material								Vicinity of I-205(s)		
		IT-MW-9(2-3.5) TU65P 10/31/2011	IT-MW-9(5-6.5) TU65C 10/31/2011	IT-MW-9(8-9.5) TV85C 11/04/2011	IT-MW-9(13-14.5) TV85D 11/04/2011	IT-MW-10(2-3.5) TU65D 10/31/2011	IT-MW-10(5-6.5) TU65E 10/31/2011	IT-MW-10(8-9.5) TV99G 11/07/2011	IT-MW-10(13.5-15) TV99H 11/07/2011	IT-TP-104-B(12-13) TU13A 10/27/2011	IT-TP-105B-B(11-12) TU13B 10/27/2011	IT-TP-106B(11-12) TU48J 10/28/2011
N-Nitrosodiphenylamine	204,000	18 U	19 U	18 U	18 U	19 U	18 U	20 U	19 U	19 U	20 U	19 U
Phenanthrene	---	**200**	**830**	**52**	18 U	**36**	18 U	**30**	**210**	11 J1	20 U	**150**
Carbazole	50,000	**13** J1	**86**	18 U	18 U	19 U	18 U	20 U	**18** J1	19 U	20 U	19 U
Anthracene	1,600,000	**22**	**190**	**11** J1	18 U	19 U	18 U	20 U	**22**	19 U	20 U	**10** J1
Di-n-Butylphthalate	26,000	18 U	**11** J1	18 U	18 U	19 U	18 U	20 U	19 U	19 U	20 U	19 U
Fluoranthene	230,000	**93**	**340**	**24**	18 U	**40**	18 U	**42**	**81**	19 U	20 U	**17** J1
Pyrene	240,000	**70**	**300**	**33** J	18 U	**40**	18 U	**59** J	**93** J	19 U	20 U	**16** J1
Butylbenzylphthalate	1,700	18 U	**16** J1	18 U	18 U	19 U	18 U	20 U	19 U	19 U	20 U	19 U
Benzo(a)anthracene	---	**16** J1	**69**	**9.2** J1	18 U	**16** J1	18 U	**20**	**26**	19 U	20 U	19 U
bis(2-Ethylhexyl)phthalate	56,600	18 UJ2	29 U	40 U	22 UJ2	23 UJ2	15 UJ2	25 U	58 U	24 U	24 U	23 U
Chrysene	---	**20**	**69**	**26**	18 U	**28**	18 U	**24**	**38**	19 U	20 U	19 U
Di-n-Octyl phthalate	---	18 U	19 U	18 U	18 U	19 U	18 U	20 U	19 U	19 U	20 U	19 U
Benzo(a)pyrene	---	18 U	**65**	**9.2** J1	18 U	**21**	18 U	**30**	**21**	19 U	20 U	19 U
Indeno(1,2,3-cd)pyrene	---	18 U	**32**	18 U	18 U	**14** J1	18 U	20 U	19 U	19 U	20 U	19 U
Dibenz(a,h)anthracene	---	18 U	**14** J1	18 U	18 U	19 U	18 U	20 U	19 U	19 U	20 U	19 U
Benzo(g,h,i)perylene	---	18 U	**49**	18 U	18 U	**22**	18 U	**15** J1	**16** J1	19 U	20 U	19 U
1-Methylnaphthalene	16,000	**32**	**14** J1	**15** J1	18 U	19 U	18 U	20 U	**81**	19 U	20 U	**29**
Total Benzofluoranthenes	---	**14** J1	**100**	**17** J1	18 U	**44**	18 U	**36**	**38**	19 U	20 U	**9.3** J1
cPAH TEQ	15	**3** J	**87** J	**12** J	ND	**29** J	ND	**36**	**28**	ND	ND	**1** J
PAHs (µg/kg)												
Method SW8270D-SIM												
Naphthalene	2,100	**43**	**18**	**40**	**3.2** J1	**3.8** J1	4.6 U	**4.5** J1	**200**	**3.6** J1	**5.3**	**59** J
2-Methylnaphthalene	320,000	**54**	**14**	**35**	**3.9** J1	**4.6** J1	4.6 U	**3.2** J1	**130**	**3.8** J1	4.6 U	**6.6** J
1-Methylnaphthalene	16,000	**32**	**15**	**35**	**2.4** J1	**3.9** J1	4.6 U	4.9 U	**82**	**3.7** J1	4.6 U	**7.6**
Total Naphthalenes	---	**129**	**47**	**110**	**9.5** J1	**12.3** J1	4.6 U	**7.7** J1	**412**	**11.1** J1	**5.3**	**73.2** J
Acenaphthylene	---	**2.6** J1	**5.1**	4.6 U	4.6 U	4.8 U	4.6 U	4.9 U	4.9 U	4.8 U	4.6 U	4.6 U
Acenaphthene	230,000	**110**	**210**	**29**	4.6 U	**3.8** J1	4.6 U	**3** J1	**90**	**4.1** J1	**2.5** J1	**28** J
Fluorene	150,000	**86**	**350**	**17**	4.6 U	**3.5** J1	4.6 U	**2.5** J1	**72**	4.8 U	4.6 U	**22** J
Phenanthrene	---	**200**	**1200**	**76**	**7.2**	**26**	4.6 U	**29**	**190**	**7.7**	**3.8** J1	**51** J
Anthracene	1,600,000	**22**	**300**	**15**	4.6 U	**6.3**	4.6 U	**6.2**	**30**	4.8 U	4.6 U	**3.8** J1
Fluoranthene	230,000	**96**	**630**	**35**	**3.5** J1	**30**	4.6 U	**42**	**83**	**5**	**4.8**	**9.1**
Pyrene	240,000	**65**	**390**	**28**	3.5 U	**23**	4.6 U	**48**	**64**	**6.2**	**4.4** J1	**7.4**
Benzo(a)anthracene	---	**18**	**100**	**12**	4.6 U	**14**	4.6 U	**21**	**21**	4.8 U	4.6 U	**2.8** J, J1
Chrysene	---	**21.0**	**99.0**	**30.0**	**2.3** J1	**21.0**	4.6 U	**25.0**	**31.0**	**3.0** J1	4.6 U	**3.5** J, J1
Benzo(a)pyrene	---	**9.4**	**80**	**8.9**	**3.3** J1	**14**	4.6 U	**30**	**23**	4.8 U	4.6 U	**2.6** J, J1
Indeno(1,2,3-cd)pyrene	---	**3.8** J1	**49**	**3.3** J1	4.6 U	**11**	4.6 U	**17**	**11**	4.8 U	4.6 U	4.6 U
Dibenz(a,h)anthracene	---	4.6 U	**19**	**4.6**	4.6 U	**5.2** M	4.6 U	**6.5**	**4.1** J1	4.8 U	4.6 U	4.6 U
Benzo(g,h,i)perylene	---	**6.6**	**64**	**8.8**	4.6 U	**15**	4.6 U	**22**	**16**	4.8 U	4.6 U	4.6 U
Dibenzofuran	80,000	**59**	**270**	**22**	4.6 U	**4.2** J1	4.6 U	4.9 U	**61**	**2.6** J1	4.6 U	**8.4** J
Total Benzofluoranthenes	---	**18**	**130**	**17**	4.6 U	**33**	4.6 U	**42**	**37**	4.8 U	4.6 U	4.6 U
cPAH TEQ	15	**14** J	**111**	**13** J	**3.3** J	**20.5** J	ND	**38.9**	**30.6** J	**0.5** J	ND	**2.9** J
PCBs (µg/kg)												
Method SW8082												
Aroclor 1242	0.72	32 U	32 U	32 U	32 U	33 U	31 U	29 U	31 U	36 U	34 U	33 U
Aroclor 1248	220	32 U	32 U	32 U	32 U	33 U	31 U	29 U	**69**	36 U	34 U	33 U
Aroclor 1254	0.29	32 U	32 U	32 U	32 U	33 U	31 U	29 U	**160**	36 U	34 U	33 U
Aroclor 1260	5.4	32 U	32 U	32 U	32 U	33 U	31 U	29 U	**64**	36 U	34 U	33 U
Total PCBs	1.8	ND	ND	ND	ND	ND	ND	ND	**293**	ND	ND	ND

TABLE Q-4
SOIL ANALYTICAL DETECTS
FORMER SLIP 5 AREA
BOEING ISAACSON-THOMPSON
REMEDIAL INVESTIGATION

										Vicinity of I-205(s)		
		FILL B: 1946-1960 Random Fill Material										
	Preliminary Cleanup Levels	IT-MW-9(2-3.5) TU65P 10/31/2011	IT-MW-9(5-6.5) TU65C 10/31/2011	IT-MW-9(8-9.5) TV85C 11/04/2011	IT-MW-9(13-14.5) TV85D 11/04/2011	IT-MW-10(2-3.5) TU65D 10/31/2011	IT-MW-10(5-6.5) TU65E 10/31/2011	IT-MW-10(8-9.5) TV99G 11/07/2011	IT-MW-10(13.5-15) TV99H 11/07/2011	IT-TP-104-B(12-13) TU13A 10/27/2011	IT-TP-105B-B(11-12) TU13B 10/27/2011	IT-TP-106B(11-12) TU48J 10/28/2011
TOTAL PETROLEUM HYDROCARBONS (mg/kg)												
NWTPH-HCID												
Diesel-Range Organics	---											
Gasoline-Range Organics	---											
Lube Oil	---											
NWTPH-Dx												
Diesel-Range Organics	2,000	**9.4**	**18**	**12**	5.5 U	**6.1**	5 U	5.5 U	**35**	5.8 U	5.8 U	**9.4**
Oil-Range Organics	2,000	**15**	**77**	**43**	11 U	**19**	10 U	11 U	**56**	12 U	12 U	12 U
NWTPH-G												
Gasoline-Range Organics	100/30	5.7 U	6.4 U	6.7 U	6.8 U	6.8 U	6.2 U	**7.8**	**8.7**	7.6 U	8 U	8.2 U
C19 Branched Hydrocarbon	---											
C11 Hydrocarbon	---											
C18-C25 Hydrocarbons (total)	---											
TOTAL METALS (mg/kg)												
Methods 200.8/7471A/SW7196A												
Antimony	5	0.2 U	0.2 U	0.2 U	0.2 U	0.2 U	0.2 U	0.2 U	0.3 U	0.2 UJ	0.2 U	0.2 UJ
Barium	640	**38.7**	**46.1**	**50.8**	**26.3**	**53.6**	**38.4**	**38.7**	**71.4**	**35.6** J	**27.6**	**43.5**
Beryllium	160	0.2 U	**0.2**	0.2 U	0.2 U	**0.2**	0.2 U	0.2 U	**0.4**	0.2 U	0.2 U	0.2 U
Cadmium	1.3	0.1 U	**0.5**	**0.2**	0.1 U	**0.1**	0.1 U	0.1 U	**0.6**	**0.1**	0.1 U	**0.2**
Chromium	1,480	**21.1**	**13.2**	**13.7**	**10.6**	**21.6**	**24.1**	**22.2**	**21**	**11**	**12**	**13.5**
Chromium VI	3.8	0.453 U	0.448 U	0.467 U	0.482 U	0.45 U	0.415 U	0.426 U	0.564 U	0.498 U	0.47 U	0.494 U
Copper	36	**14**	**54.2**	**17.9**	**14.3**	**25.8**	**10.5**	**14.1**	**32.7**	**11.9**	**9.9**	**14.5**
Lead	250	**3.7**	**14.7**	**5.3**	**4.8**	**23.4**	**1.9**	**5.1**	**30.5**	**2.9**	**2.1**	**4.1** J
Mercury	1.5	0.03 U	**0.03**	**0.04**	0.03 U	**0.04**	0.02 U	0.02 U	**0.12**	0.02 U	0.03 U	0.02 UJ
Nickel	210	**31.7**	**18.1**	**14.6**	**9.6**	**33.0**	**39.0**	**32.0**	**19.5**	**13.7**	**10.3**	**12.5**
Selenium	1.0	0.6 U	0.5 U	0.6 U	0.6 U	0.5 U	0.5 U	0.5 U	0.7 U	0.6 U	0.6 U	0.6 U
Silver	170	0.2 U	0.2 U	0.2 U	0.2 U	0.2 U	0.2 U	0.2 U	0.3 U	0.2 U	0.2 U	0.2 U
Thallium	0.67	0.2 U	0.2 U	0.2 U	0.2 U	0.2 U	0.2 U	0.2 U	0.3 U	0.2 U	0.2 U	0.2 U
Zinc	1,400	**33**	**63**	**56**	**35**	**46**	**28**	**32**	**88**	**37**	**31**	**38**
CONVENTIONALS (mg/kg)												
Cyanide	---											
Oil and Grease	---											

TABLE Q-4
SOIL ANALYTICAL DETECTS
FORMER SLIP 5 AREA
BOEING ISAACSON-THOMPSON
REMEDIAL INVESTIGATION

		Hazardous Material Storage Sheds Paint Storage Area								Hydraulic Test Pad Area				
		FILL B: 1946-1960 Random Fill Material												
	Preliminary Cleanup Levels	TOWPATHEXC1-B(.8) TE27A 07/15/2011	237 (3.5) 1/21/1988	237 (8.5) 1/29/1988	237 (15) 1/29/1988	TDP27 (11) NY64B 11/6/2008	TDP28 (11) NY64C 11/6/2008	TDP29 (11) NY64D 11/6/2008	TDP30 (11) NY64E 11/6/2008	B-10 (5.5) 7/6/1994	B-10 (8) 7/6/1994	B-10 (10.5) 7/6/1994	B-10 (13) 7/6/1994	B-10 (15.5) 7/6/1994
VOLATILES (µg/kg)														
Method SW8260C														
Methylene Chloride	2,400	**10** J				1.8 U	1.9 U	1.7 U	2.2 U					
Acetone	510,000	**16**				**25**	**72**	**95**	**83**					
Carbon Disulfide	75,000	**8.2**				0.9 U	**14**	**22**	**22**					
1,1-Dichloroethane	710	0.9 U				0.9 U	**5.4**	**0.7**	**1.4**					
trans-1,2-Dichloroethene	19,000	0.9 U				0.9 U	1 U	0.7 U	1.1 U					
cis-1,2-Dichloroethene	2,600	0.9 U				0.9 U	1 U	0.7 U	1.1 U					
2-Butanone	430,000	4.7 U				4.6 U	**140**	**20**	**16**					
Bromodichloromethane	89	0.9 U				0.9 U	1 U	0.7 U	1.1 U					
Trichloroethene	51	0.9 U				0.9 U	1 U	0.7 U	1.1 U					
Benzene	93	0.9 U				0.9 U	1 U	0.7 U	1.1 U					
trans-1,3-Dichloropropene	---	0.9 U				0.9 U	1 U	0.7 U	1.1 U					
4-Methyl-2-Pentanone (MIBK)	170,000	4.7 U				4.6 U	4.8 U	3.5 U	5.4 U					
Toluene	100,000	0.9 U				0.9 U	**1.4**	**0.9**	1.1 U					
Ethylbenzene	230	0.9 U				0.9 U	1 U	0.7 U	1.1 U					
Trichlorofluoromethane	200,000	0.9 U				0.9 U	1 U	0.7 U	1.1 U					
1,1,2-Trichloro-1,2,2-trifuoroethane	1,000,000,000	1.9 U				1.8 U	1.9 U	1.4 U	2.2 U					
m,p-Xylene	160,000	0.9 U				0.9 U	1 U	0.7 U	1.1 U					
o-Xylene	200,000	0.9 U				0.9 U	1 U	0.7 U	1.1 U					
1,2-Dichlorobenzene	68,000	0.9 U												
Methyl Iodide	---	0.9 U												
1,3,5-Trimethylbenzene	800,000	0.9 U												
1,2,4-Trimethylbenzene	800,000	0.9 U												
Isopropylbenzene	78,000	0.9 U												
n-Propylbenzene	11,000	0.9 U												
tert-Butylbenzene	---	0.9 U												
sec-Butylbenzene	---	0.9 U												
4-Isopropyltoluene	---	0.9 U												
n-Butylbenzene	27,000	0.9 U												
Naphthalene	2,100	4.7 U												
1,2-Dichloroethene (total)	---													
Total Xylenes	200,000													
SEMIVOLATILES (µg/kg)														
Method SW8270D														
Phenol	1,900,000	18 U					61 U	60 U						
1,3-Dichlorobenzene	3,840	18 U					61 U	60 U						
1,4-Dichlorobenzene	3,500	18 U					61 U	60 U						
Benzyl Alcohol	8,000,000	18 U					61 U	60 U						
1,2-Dichlorobenzene	68,000	18 U					61 U	60 U						
2-Methylphenol	250,000	18 U					61 U	60 U						
4-Methylphenol	41,000	36 U					61 U	60 U						
Isophorone	---	18 U					61 U	60 U						
2,4-Dimethylphenol	95,000	36 U					61 U	60 U						
Benzoic Acid	9,000	360 U					610 U	600 U						
Naphthalene	2,100	**16** J					61 U	60 U						
2-Methylnaphthalene	320,000	18 U					61 U	60 U						
Acenaphthylene	---	**30**					61 U	60 U						
Acenaphthene	230,000	18 U					61 U	60 U						
Dibenzofuran	80,000	18 U					61 U	60 U						
Fluorene	150,000	18 U					61 U	60 U						

TABLE Q-4
SOIL ANALYTICAL DETECTS
FORMER SLIP 5 AREA
BOEING ISAACSON-THOMPSON
REMEDIAL INVESTIGATION

		Hazardous Material Storage Sheds Paint Storage Area								Hydraulic Test Pad Area				
		FILL B: 1946-1960 Random Fill Material												
	Preliminary Cleanup Levels	TOWPATHEXC1-B(.8) TE27A 07/15/2011	237 (3.5) 1/21/1988	237 (8.5) 1/29/1988	237 (15) 1/29/1988	TDP27 (11) NY64B 11/6/2008	TDP28 (11) NY64C 11/6/2008	TDP29 (11) NY64D 11/6/2008	TDP30 (11) NY64E 11/6/2008	B-10 (5.5) 7/6/1994	B-10 (8) 7/6/1994	B-10 (10.5) 7/6/1994	B-10 (13) 7/6/1994	B-10 (15.5) 7/6/1994
N-Nitrosodiphenylamine	204,000	18 U					61 U	60 U						
Phenanthrene	---	**40**					61 U	60 U						
Carbazole	50,000	**10** J					61 U	60 U						
Anthracene	1,600,000	**33**					61 U	60 U						
Di-n-Butylphthalate	26,000	18 U					61 U	60 U						
Fluoranthene	230,000	**160**					61 U	60 U						
Pyrene	240,000	**350**					61 U	60 U						
Butylbenzylphthalate	1,700	18 U					61 U	60 U						
Benzo(a)anthracene	---	**270**					61 U	60 U						
bis(2-Ethylhexyl)phthalate	56,600	23 U					61 U	60 U						
Chrysene	---	**420**					61 U	60 U						
Di-n-Octyl phthalate	---	18 U					61 U	60 U						
Benzo(a)pyrene	---	**1200**					61 U	60 U						
Indeno(1,2,3-cd)pyrene	---	**1100** J					61 U	60 U						
Dibenz(a,h)anthracene	---	**380**					61 U	60 U						
Benzo(g,h,i)perylene	---	**1200** J					61 U	60 U						
1-Methylnaphthalene	16,000	18 U					61 U	60 U						
Total Benzofluoranthenes	---	**1900**												
cPAH TEQ	15	**1569**					ND	ND						
PAHs (µg/kg)														
Method SW8270D-SIM														
Naphthalene	2,100	4.7 U												
2-Methylnaphthalene	320,000	4.7 U												
1-Methylnaphthalene	16,000	4.7 U												
Total Naphthalenes	---	ND												
Acenaphthylene	---	4.7 U												
Acenaphthene	230,000	4.7 U												
Fluorene	150,000	4.7 U												
Phenanthrene	---	**5.2**												
Anthracene	1,600,000	4.7 U												
Fluoranthene	230,000	**8.8**												
Pyrene	240,000	**8.9**												
Benzo(a)anthracene	---	**5.8**												
Chrysene	---	**7.5**												
Benzo(a)pyrene	---	**9.9**												
Indeno(1,2,3-cd)pyrene	---	4.7 U												
Dibenz(a,h)anthracene	---	4.7 U												
Benzo(g,h,i)perylene	---	**3.1** J												
Dibenzofuran	80,000	4.7 U												
Total Benzofluoranthenes	---	**20** J												
cPAH TEQ	15	**12.6**												
PCBs (µg/kg)														
Method SW8082														
Aroclor 1242	0.72	32 U					30 U	32 U						
Aroclor 1248	220	32 U					30 U	32 U						
Aroclor 1254	0.29	32 U					30 U	32 U						
Aroclor 1260	5.4	32 U					30 U	32 U						
Total PCBs	1.8	ND					ND	ND						

TABLE Q-4
SOIL ANALYTICAL DETECTS
FORMER SLIP 5 AREA
BOEING ISAACSON-THOMPSON
REMEDIAL INVESTIGATION

		Hazardous Material Storage Sheds Paint Storage Area								Hydraulic Test Pad Area				
		FILL B: 1946-1960 Random Fill Material												
	Preliminary Cleanup Levels	TOWPATHEXC1-B(.8) TE27A 07/15/2011	237 (3.5) 1/21/1988	237 (8.5) 1/29/1988	237 (15) 1/29/1988	TDP27 (11) NY64B 11/6/2008	TDP28 (11) NY64C 11/6/2008	TDP29 (11) NY64D 11/6/2008	TDP30 (11) NY64E 11/6/2008	B-10 (5.5) 7/6/1994	B-10 (8) 7/6/1994	B-10 (10.5) 7/6/1994	B-10 (13) 7/6/1994	B-10 (15.5) 7/6/1994
TOTAL PETROLEUM HYDROCARBONS (mg/kg)														
NWTPH-HCID														
Diesel-Range Organics	---					50 U	50 U	50 U	50 U					
Gasoline-Range Organics	---					20 U	20 U	20 U	20 U	**150**	12 U	10 U	**64**	**25**
Lube Oil	---					100 U	100 U	100 U	100 U					
NWTPH-Dx														
Diesel-Range Organics	2,000	**6.2**												
Oil-Range Organics	2,000	**18**												
NWTPH-G														
Gasoline-Range Organics	100/30	5.8 U												
C19 Branched Hydrocarbon	---													
C11 Hydrocarbon	---													
C18-C25 Hydrocarbons (total)	---													
TOTAL METALS (mg/kg)														
Methods 200.8/7471A/SW7196A														
Antimony	5	0.2 U												
Barium	640	**43.5**												
Beryllium	160	0.2 U												
Cadmium	1.3	0.1 U				0.2 U	**0.3**	**0.7**	**0.8**					
Chromium	1,480	**16.1**	**22**	**16**	**16**	**16.4**	**17.8**	**20.4**	**24.8**					
Chromium VI	3.8	0.45 UJ												
Copper	36	**38.7**	**29**	**15**	**10**	**13.7**	**20.5**	**26.2**	**35.9**					
Lead	250	**6.1**	**4**	4 U	5 U	2 U	**4**	**7**	**15**					
Mercury	1.5	**0.04**				0.05 U	0.06 U	**0.1**	**0.17**					
Nickel	210	**18.0**	**13**	**11**	**8**									
Selenium	1.0	0.5 U												
Silver	170	0.2 U												
Thallium	0.67	0.2 U												
Zinc	1,400	**43**	**40.3**	**30.1**	**27.6**									
CONVENTIONALS (mg/kg)														
Cyanide	---													
Oil and Grease	---													

TABLE Q-4
SOIL ANALYTICAL DETECTS
FORMER SLIP 5 AREA
BOEING ISAACSON-THOMPSON
REMEDIAL INVESTIGATION

		Hydraulic Test Pad Area													
		FILL B: 1946-1960 Random Fill Material													
	Preliminary Cleanup Levels	B-11 (5.5) 7/6/1994	B-11 (8) 7/6/1994	B-11 (10.5) 7/6/1994	B-11 (13) 7/6/1994	B-11 (15.5) 7/6/1994	B-12 (5.5) 7/6/1994	B-12 (8) 7/6/1994	B-12 (10.5) 7/6/1994	B-12 (13) 7/6/1994	B-12 (15.5) 7/6/1994	IT-MW-11(2-3.5) TU65F 10/31/2011	IT-MW-11(5-6.5) TU65G 10/31/2011	IT-MW-11(8-9.5) TV99D 11/07/2011	IT-MW-11(13.5-15) TV99E 11/07/2011
VOLATILES (µg/kg)															
Method SW8260C															
Methylene Chloride	2,400											**2.0** J	**3.4** J	**1.3** J1	**1.4** J1
Acetone	510,000											31 U	14 U	**40** J	**28**
Carbon Disulfide	75,000											**0.5** J1	1.2 U	**2.0** J	**18**
1,1-Dichloroethane	710											**0.6** J1	1.2 U	1.0 UJ	1.1 U
trans-1,2-Dichloroethene	19,000											1.0 U	1.2 U	1.0 UJ	1.1 U
cis-1,2-Dichloroethene	2,600											1.0 U	1.2 U	1.0 U	1.1 U
2-Butanone	430,000											**3.4** J1	5.8 U	**5.6**	**4.5** J1
Bromodichloromethane	89											1.0 U	1.2 U	1.0 U	1.1 U
Trichloroethene	51											1.0 U	1.2 U	1.0 UJ	1.1 U
Benzene	93											1.0 U	1.2 U	**0.6** J1	**0.9** J1
trans-1,3-Dichloropropene	---											1.0 U	1.2 U	1.0 U	1.1 U
4-Methyl-2-Pentanone (MIBK)	170,000											4.8 U	5.8 U	5.1 U	5.3 U
Toluene	100,000											1.0 U	1.2 U	**0.9** J, J1	**0.8** J1
Ethylbenzene	230											1.0 U	1.2 U	1.0 UJ	1.1 U
Trichlorofluoromethane	200,000											1.0 U	1.2 U	1.0 U	1.1 U
1,1,2-Trichloro-1,2,2-trifuoroethane	1,000,000,000											**0.8** J1	2.3 U	**1.5** J, J1	**5.5**
m,p-Xylene	160,000											1.0 U	1.2 U	1.0 UJ	1.1 U
o-Xylene	200,000											1.0 U	1.2 U	1.0 UJ	1.1 U
1,2-Dichlorobenzene	68,000											1.0 U	1.2 U	1.0 UJ	1.1 U
Methyl Iodide	---											1.0 U	1.2 U	1.0 UJ	1.1 U
1,3,5-Trimethylbenzene	800,000											1.0 U	1.2 U	1.0 UJ	1.1 U
1,2,4-Trimethylbenzene	800,000											1.0 U	1.2 U	1.0 UJ	1.1 U
Isopropylbenzene	78,000											1.0 U	1.2 U	1.0 U	1.1 U
n-Propylbenzene	11,000											1.0 U	1.2 U	1.0 UJ	1.1 U
tert-Butylbenzene	---											1.0 U	1.2 U	1.0 UJ	1.1 U
sec-Butylbenzene	---											1.0 U	1.2 U	1.0 UJ	1.1 U
4-Isopropyltoluene	---											1.0 U	1.2 U	1.0 UJ	1.1 U
n-Butylbenzene	27,000											1.0 U	1.2 U	1.0 UJ	1.1 U
Naphthalene	2,100											4.8 U	5.8 U	**2.3** J, J1	**1.4** J, J1
1,2-Dichloroethene (total)	---														
Total Xylenes	200,000														
SEMIVOLATILES (µg/kg)															
Method SW8270D															
Phenol	1,900,000											19 U	19 U	19 U	19 U
1,3-Dichlorobenzene	3,840											19 U	19 U	19 U	19 U
1,4-Dichlorobenzene	3,500											19 U	19 U	19 U	19 U
Benzyl Alcohol	8,000,000											19 U	19 U	19 U	19 U
1,2-Dichlorobenzene	68,000											19 U	19 U	19 U	19 U
2-Methylphenol	250,000											19 U	19 U	19 U	19 U
4-Methylphenol	41,000											39 U	38 U	38 U	39 U
Isophorone	---											19 U	19 U	19 U	19 U
2,4-Dimethylphenol	95,000											39 U	38 U	38 U	39 U
Benzoic Acid	9,000											390 U	380 U	380 U	390 U
Naphthalene	2,100											19 U	19 U	**96**	**32**
2-Methylnaphthalene	320,000											19 U	19 U	**59**	**39**
Acenaphthylene	---											19 U	19 U	19 U	19 U
Acenaphthene	230,000											19 U	19 U	**57**	**27**
Dibenzofuran	80,000											**9.7** J1	19 U	**58**	**32**
Fluorene	150,000											19 U	19 U	**74** J	**32** J

TABLE Q-4
SOIL ANALYTICAL DETECTS
FORMER SLIP 5 AREA
BOEING ISAACSON-THOMPSON
REMEDIAL INVESTIGATION

		Hydraulic Test Pad Area													
		FILL B: 1946-1960 Random Fill Material													
	Preliminary Cleanup Levels	B-11 (5.5) 7/6/1994	B-11 (8) 7/6/1994	B-11 (10.5) 7/6/1994	B-11 (13) 7/6/1994	B-11 (15.5) 7/6/1994	B-12 (5.5) 7/6/1994	B-12 (8) 7/6/1994	B-12 (10.5) 7/6/1994	B-12 (13) 7/6/1994	B-12 (15.5) 7/6/1994	IT-MW-11(2-3.5) TU65F 10/31/2011	IT-MW-11(5-6.5) TU65G 10/31/2011	IT-MW-11(8-9.5) TV99D 11/07/2011	IT-MW-11(13.5-15) TV99E 11/07/2011
N-Nitrosodiphenylamine	204,000											19 U	19 U	19 U	19 U
Phenanthrene	---											**32**	19 U	**220**	**65**
Carbazole	50,000											19 U	19 U	**23**	19 U
Anthracene	1,600,000											19 U	19 U	**31**	**16** J1
Di-n-Butylphthalate	26,000											19 U	19 U	19 U	19 U
Fluoranthene	230,000											**25**	19 U	**160**	**56**
Pyrene	240,000											**24**	19 U	**170** J	**68** J
Butylbenzylphthalate	1,700											19 U	19 U	19 U	19 U
Benzo(a)anthracene	---											19 U	19 U	**54**	**16** J1
bis(2-Ethylhexyl)phthalate	56,600											21 UJ2	28 U	25 U	100 U
Chrysene	---											**12** J1	19 U	**63**	**23**
Di-n-Octyl phthalate	---											19 U	19 U	19 U	19 U
Benzo(a)pyrene	---											19 U	19 U	**48**	**18** J1
Indeno(1,2,3-cd)pyrene	---											19 U	19 U	**22**	19 U
Dibenz(a,h)anthracene	---											19 U	19 U	19 U	19 U
Benzo(g,h,i)perylene	---											19 U	19 U	**31**	19 U
1-Methylnaphthalene	16,000											19 U	19 U	**29**	**36**
Total Benzofluoranthenes	---											**12** J1	19 U	**79**	**23**
cPAH TEQ	15											**1.3** J	ND	**64**	**22** J
PAHs (µg/kg)															
Method SW8270D-SIM															
Naphthalene	2,100											**20**	4.8 U	**66**	**25**
2-Methylnaphthalene	320,000											**10**	4.8 U	**45**	**21**
1-Methylnaphthalene	16,000											**5.6**	4.8 U	**24**	**18**
Total Naphthalenes	---											**35.6**	4.8 U	**135**	**64**
Acenaphthylene	---											4.8 U	4.8 U	4.7 U	4.8 U
Acenaphthene	230,000											**5.5**	4.8 U	**57**	**24**
Fluorene	150,000											**3.9** J1	4.8 U	**61**	**30**
Phenanthrene	---											**18**	**2.5** J1	**170**	**66**
Anthracene	1,600,000											**2.7** J1	4.8 U	**31**	**18**
Fluoranthene	230,000											**16**	**2.7** J1	**130**	**64**
Pyrene	240,000											**14**	**3.4** J1	**100**	**50**
Benzo(a)anthracene	---											**5.8**	4.8 U	**40**	**17**
Chrysene	---											**7.3**	4.8 U	**48.0**	**22.0**
Benzo(a)pyrene	---											**5.6**	4.8 U	**37**	**20**
Indeno(1,2,3-cd)pyrene	---											**3.9** J1	4.8 U	**18**	**8.3**
Dibenz(a,h)anthracene	---											4.8 U	4.8 U	**7.2**	**3.4** J1
Benzo(g,h,i)perylene	---											**4.8** J1	4.8 U	**22**	**11**
Dibenzofuran	80,000											**6.3**	4.8 U	**55**	**27**
Total Benzofluoranthenes	---											**11**	4.8 U	**61**	**26**
cPAH TEQ	15											**7.7** J	ND	**50.1**	**25.7** J
PCBs (µg/kg)															
Method SW8082															
Aroclor 1242	0.72											31 U	32 U	31 U	32 U
Aroclor 1248	220											31 U	32 U	31 U	32 U
Aroclor 1254	0.29											31 U	32 U	31 U	32 U
Aroclor 1260	5.4											31 U	32 U	31 U	32 U
Total PCBs	1.8											ND	ND	ND	ND

TABLE Q-4
SOIL ANALYTICAL DETECTS
FORMER SLIP 5 AREA
BOEING ISAACSON-THOMPSON
REMEDIAL INVESTIGATION

		Hydraulic Test Pad Area													
		FILL B: 1946-1960 Random Fill Material													
	Preliminary Cleanup Levels	B-11 (5.5) 7/6/1994	B-11 (8) 7/6/1994	B-11 (10.5) 7/6/1994	B-11 (13) 7/6/1994	B-11 (15.5) 7/6/1994	B-12 (5.5) 7/6/1994	B-12 (8) 7/6/1994	B-12 (10.5) 7/6/1994	B-12 (13) 7/6/1994	B-12 (15.5) 7/6/1994	IT-MW-11(2-3.5) TU65F 10/31/2011	IT-MW-11(5-6.5) TU65G 10/31/2011	IT-MW-11(8-9.5) TV99D 11/07/2011	IT-MW-11(13.5-15) TV99E 11/07/2011
TOTAL PETROLEUM HYDROCARBONS (mg/kg)															
NWTPH-HCID															
Diesel-Range Organics	---														
Gasoline-Range Organics	---	**140**	**21**	12 U	**27**	**45**	**120**	**25**	**40**	**37**	**44**				
Lube Oil	---														
NWTPH-Dx															
Diesel-Range Organics	2,000											**6.2**	5.2 U	**14**	**13**
Oil-Range Organics	2,000											**17**	10 U	**42**	**26**
NWTPH-G															
Gasoline-Range Organics	100/30											5.5 U	5.1 U	**11**	7.3 U
C19 Branched Hydrocarbon	---														
C11 Hydrocarbon	---														
C18-C25 Hydrocarbons (total)	---														
TOTAL METALS (mg/kg)															
Methods 200.8/7471A/SW7196A															
Antimony	5											0.2 U	0.2 U	0.2 U	0.2 U
Barium	640											**52.5**	**51.4**	**51.4**	**47.6**
Beryllium	160											**0.2**	**0.2**	**0.2**	0.2 U
Cadmium	1.3											**0.1**	0.1 U	**0.2**	**0.2**
Chromium	1,480											**21.3**	**18.9**	**17.3**	**13.3**
Chromium VI	3.8											0.412 U	0.431 U	0.432 UJ	0.493 U
Copper	36											**22.5**	**15.2**	**39.3**	**17.6**
Lead	250											**7.5**	**2.5**	**11.4**	**4.2**
Mercury	1.5											**0.07**	0.02 U	**0.14**	**0.04**
Nickel	210											**28.7**	**26.4**	**24.0**	**13.2**
Selenium	1.0											0.5 U	0.5 U	0.5 U	0.6 U
Silver	170											0.2 U	0.2 U	0.2 U	0.2 U
Thallium	0.67											0.2 U	0.2 U	0.2 U	0.2 U
Zinc	1,400											**45**	**34**	**63**	**39**
CONVENTIONALS (mg/kg)															
Cyanide	---														
Oil and Grease	---														

TABLE Q-4
SOIL ANALYTICAL DETECTS
FORMER SLIP 5 AREA
BOEING ISAACSON-THOMPSON
REMEDIAL INVESTIGATION

		Hydraulic Test Pad Area												
		FILL B: 1946-1960 Random Fill Material			FILL C: 1946-1960 Some Random Fill Along with Fill From Off-Site Sources									
	Preliminary Cleanup Levels	TDP31 (12) NY64F 11/6/2008	TDP24 (11) NY44I 11/5/2008	TDP32 (11) (a) NY64G 11/6/2008	5 (2.5) 8/1/1983	6-3 (1) 8/1/1983	6-3 (2) 8/1/1983	7-1 (2.5) 8/1/1983	7-5 (8.5) 8/1/1983	7-5 (13.5) 8/1/1983	7-5 (18.5) 8/1/1983	15 (2) 8/1/1983	Dup of 15 15-Dup (2) 8/1/1983	15 (2.5) 8/1/1983
VOLATILES (µg/kg)														
Method SW8260C														
Methylene Chloride	2,400	1.7 U		1.7 U										
Acetone	510,000	**47**		**15**										
Carbon Disulfide	75,000	**4.8**		**0.9**										
1,1-Dichloroethane	710	0.9 U		0.7 U										
trans-1,2-Dichloroethene	19,000	0.9 U		0.7 U										
cis-1,2-Dichloroethene	2,600	0.9 U		0.7 U										
2-Butanone	430,000	**7.3**		3.4 U										
Bromodichloromethane	89	0.9 U		0.7 U										
Trichloroethene	51	0.9 U		0.7 U										
Benzene	93	0.9 U		0.7 U										
trans-1,3-Dichloropropene	---	0.9 U		0.7 U										
4-Methyl-2-Pentanone (MIBK)	170,000	4.3 U		3.4 U										
Toluene	100,000	**6**		0.7 U										
Ethylbenzene	230	0.9 U		0.7 U										
Trichlorofluoromethane	200,000	0.9 U		0.7 U										
1,1,2-Trichloro-1,2,2-trifuoroethane	1,000,000,000	**16**		1.4 U										
m,p-Xylene	160,000	**1.6**		0.7 U										
o-Xylene	200,000	**3**		0.7 U										
1,2-Dichlorobenzene	68,000													
Methyl Iodide	---													
1,3,5-Trimethylbenzene	800,000													
1,2,4-Trimethylbenzene	800,000													
Isopropylbenzene	78,000													
n-Propylbenzene	11,000													
tert-Butylbenzene	---													
sec-Butylbenzene	---													
4-Isopropyltoluene	---													
n-Butylbenzene	27,000													
Naphthalene	2,100													
1,2-Dichloroethene (total)	---													
Total Xylenes	200,000													
SEMIVOLATILES (µg/kg)														
Method SW8270D														
Phenol	1,900,000	64 U												
1,3-Dichlorobenzene	3,840	64 U												
1,4-Dichlorobenzene	3,500	64 U												
Benzyl Alcohol	8,000,000	64 U												
1,2-Dichlorobenzene	68,000	64 U												
2-Methylphenol	250,000	64 U												
4-Methylphenol	41,000	64 U												
Isophorone	---	64 U												
2,4-Dimethylphenol	95,000	64 U												
Benzoic Acid	9,000	640 U												
Naphthalene	2,100	64 U												
2-Methylnaphthalene	320,000	64 U												
Acenaphthylene	---	64 U												
Acenaphthene	230,000	64 U												
Dibenzofuran	80,000	64 U												
Fluorene	150,000	64 U												

TABLE Q-4
SOIL ANALYTICAL DETECTS
FORMER SLIP 5 AREA
BOEING ISAACSON-THOMPSON
REMEDIAL INVESTIGATION

		Hydraulic Test Pad Area												
		FILL B: 1946-1960 Random Fill Material			FILL C: 1946-1960 Some Random Fill Along with Fill From Off-Site Sources									
	Preliminary Cleanup Levels	TDP31 (12) NY64F 11/6/2008	TDP24 (11) NY44I 11/5/2008	TDP32 (11) (a) NY64G 11/6/2008	5 (2.5) 8/1/1983	6-3 (1) 8/1/1983	6-3 (2) 8/1/1983	7-1 (2.5) 8/1/1983	7-5 (8.5) 8/1/1983	7-5 (13.5) 8/1/1983	7-5 (18.5) 8/1/1983	15 (2) 8/1/1983	Dup of 15 15-Dup (2) 8/1/1983	15 (2.5) 8/1/1983
N-Nitrosodiphenylamine	204,000	64 U												
Phenanthrene	---	64 U												
Carbazole	50,000	64 U												
Anthracene	1,600,000	64 U												
Di-n-Butylphthalate	26,000	64 U												
Fluoranthene	230,000	64 U												
Pyrene	240,000	64 U												
Butylbenzylphthalate	1,700	64 U												
Benzo(a)anthracene	---	64 U												
bis(2-Ethylhexyl)phthalate	56,600	64 U												
Chrysene	---	64 U												
Di-n-Octyl phthalate	---	64 U												
Benzo(a)pyrene	---	64 U												
Indeno(1,2,3-cd)pyrene	---	64 U												
Dibenz(a,h)anthracene	---	64 U												
Benzo(g,h,i)perylene	---	64 U												
1-Methylnaphthalene	16,000	64 U												
Total Benzofluoranthenes	---													
cPAH TEQ	15	ND												
PAHs (µg/kg)														
Method SW8270D-SIM														
Naphthalene	2,100													
2-Methylnaphthalene	320,000													
1-Methylnaphthalene	16,000													
Total Naphthalenes	---													
Acenaphthylene	---													
Acenaphthene	230,000													
Fluorene	150,000													
Phenanthrene	---													
Anthracene	1,600,000													
Fluoranthene	230,000													
Pyrene	240,000													
Benzo(a)anthracene	---													
Chrysene	---													
Benzo(a)pyrene	---													
Indeno(1,2,3-cd)pyrene	---													
Dibenz(a,h)anthracene	---													
Benzo(g,h,i)perylene	---													
Dibenzofuran	80,000													
Total Benzofluoranthenes	---													
cPAH TEQ	15													
PCBs (µg/kg)														
Method SW8082														
Aroclor 1242	0.72	31 U												
Aroclor 1248	220	31 U												
Aroclor 1254	0.29	31 U												
Aroclor 1260	5.4	31 U												
Total PCBs	1.8	ND			**9700**		**1200**	**700**		200 U		**400**	**130**	

TABLE Q-4
SOIL ANALYTICAL DETECTS
FORMER SLIP 5 AREA
BOEING ISAACSON-THOMPSON
REMEDIAL INVESTIGATION

		Hydraulic Test Pad Area												
		FILL B: 1946-1960 Random Fill Material			FILL C: 1946-1960 Some Random Fill Along with Fill From Off-Site Sources									
	Preliminary Cleanup Levels	TDP31 (12) NY64F 11/6/2008	TDP24 (11) NY44I 11/5/2008	TDP32 (11) (a) NY64G 11/6/2008	5 (2.5) 8/1/1983	6-3 (1) 8/1/1983	6-3 (2) 8/1/1983	7-1 (2.5) 8/1/1983	7-5 (8.5) 8/1/1983	7-5 (13.5) 8/1/1983	7-5 (18.5) 8/1/1983	15 (2) 8/1/1983	Dup of 15 15-Dup (2) 8/1/1983	15 (2.5) 8/1/1983
TOTAL PETROLEUM HYDROCARBONS (mg/kg)														
NWTPH-HCID														
Diesel-Range Organics	---	**50**	50 U	50 U										
Gasoline-Range Organics	---	20 U	20 U	20 U										
Lube Oil	---	**100**	100 U	100 U										
NWTPH-Dx														
Diesel-Range Organics	2,000	**58**												
Oil-Range Organics	2,000	**400**												
NWTPH-G														
Gasoline-Range Organics	100/30													
C19 Branched Hydrocarbon	---													
C11 Hydrocarbon	---													
C18-C25 Hydrocarbons (total)	---													
TOTAL METALS (mg/kg)														
Methods 200.8/7471A/SW7196A														
Antimony	5													
Barium	640				**650**	**520**		**59**	**42**	**51**	**60**		**135**	**200**
Beryllium	160													
Cadmium	1.3	0.2 U		0.2 U	**16**	**7.7**		**1.9**	**0.76**	**0.26**	**1.1**		**1.9**	**1.6**
Chromium	1,480	**14.7**		**29.4**	**1130**	**466**		**44**	**15**	**21**	**32**		**33**	**44**
Chromium VI	3.8													
Copper	36	**15.9**		**20.5**										
Lead	250	**2**		2 U	**1170**	**580**		**230**	**100**	**49**	**24**		**200**	**490**
Mercury	1.5	**0.05**		0.05 U	**0.13**	**0.19**		**0.14**	**0.12**	**0.05**	**0.24**		**0.18**	**0.84**
Nickel	210				**82**	**76**		**56**	**34**	**17**	**25**		**21**	**35**
Selenium	1.0								**0.73**		0.2 U		**0.24**	**0.6**
Silver	170				**2.5**	**2.5**		**1.2**	**0.9**	0.3 U	**0.8**		**0.54**	**0.24**
Thallium	0.67													
Zinc	1,400				**2270**	**2320**		**1640**	**877**	**77**	**194**		**272**	**440**
CONVENTIONALS (mg/kg)														
Cyanide	---				3 U		3 U	3 U		3 U				
Oil and Grease	---											**900**	**2020**	

TABLE Q-4
SOIL ANALYTICAL DETECTS
FORMER SLIP 5 AREA
BOEING ISAACSON-THOMPSON
REMEDIAL INVESTIGATION

		FILL C: 1946-1960 Some Random Fill Along with Fill From Off-Site Sources										
					Dup of 17							
	Preliminary Cleanup Levels	16 (2.5) 8/1/1983	16 (6.5) 8/1/1983	17 (2.5) 8/1/1983	17-Dup (2.5) 8/1/1983	17 (6.5) 8/1/1983	19 (1.5) 8/1/1983	19 (3.5) 8/1/1983	19 (9) 8/1/1983	I-6 (10) 10/19/1983	I-7 (3) 10/20/1983	I-7 (5) 10/20/1983
VOLATILES (µg/kg)												
Method SW8260C												
Methylene Chloride	2,400											
Acetone	510,000											
Carbon Disulfide	75,000											
1,1-Dichloroethane	710											
trans-1,2-Dichloroethene	19,000											
cis-1,2-Dichloroethene	2,600											
2-Butanone	430,000											
Bromodichloromethane	89											
Trichloroethene	51											
Benzene	93											
trans-1,3-Dichloropropene	---											
4-Methyl-2-Pentanone (MIBK)	170,000											
Toluene	100,000											
Ethylbenzene	230											
Trichlorofluoromethane	200,000											
1,1,2-Trichloro-1,2,2-trifuoroethane	1,000,000,000											
m,p-Xylene	160,000											
o-Xylene	200,000											
1,2-Dichlorobenzene	68,000											
Methyl Iodide	---											
1,3,5-Trimethylbenzene	800,000											
1,2,4-Trimethylbenzene	800,000											
Isopropylbenzene	78,000											
n-Propylbenzene	11,000											
tert-Butylbenzene	---											
sec-Butylbenzene	---											
4-Isopropyltoluene	---											
n-Butylbenzene	27,000											
Naphthalene	2,100											
1,2-Dichloroethene (total)	---											
Total Xylenes	200,000											
SEMIVOLATILES (µg/kg)												
Method SW8270D												
Phenol	1,900,000											
1,3-Dichlorobenzene	3,840											
1,4-Dichlorobenzene	3,500											
Benzyl Alcohol	8,000,000											
1,2-Dichlorobenzene	68,000											
2-Methylphenol	250,000											
4-Methylphenol	41,000											
Isophorone	---											
2,4-Dimethylphenol	95,000											
Benzoic Acid	9,000											
Naphthalene	2,100											
2-Methylnaphthalene	320,000											
Acenaphthylene	---											
Acenaphthene	230,000											
Dibenzofuran	80,000											
Fluorene	150,000											

TABLE Q-4
SOIL ANALYTICAL DETECTS
FORMER SLIP 5 AREA
BOEING ISAACSON-THOMPSON
REMEDIAL INVESTIGATION

	Preliminary Cleanup Levels	FILL C: 1946-1960 Some Random Fill Along with Fill From Off-Site Sources										
					Dup of 17							
		16 (2.5)	16 (6.5)	17 (2.5)	17-Dup (2.5)	17 (6.5)	19 (1.5)	19 (3.5)	19 (9)	I-6 (10)	I-7 (3)	I-7 (5)
		8/1/1983	8/1/1983	8/1/1983	8/1/1983	8/1/1983	8/1/1983	8/1/1983	8/1/1983	10/19/1983	10/20/1983	10/20/1983
N-Nitrosodiphenylamine	204,000											
Phenanthrene	---											
Carbazole	50,000											
Anthracene	1,600,000											
Di-n-Butylphthalate	26,000											
Fluoranthene	230,000											
Pyrene	240,000											
Butylbenzylphthalate	1,700											
Benzo(a)anthracene	---											
bis(2-Ethylhexyl)phthalate	56,600											
Chrysene	---											
Di-n-Octyl phthalate	---											
Benzo(a)pyrene	---											
Indeno(1,2,3-cd)pyrene	---											
Dibenz(a,h)anthracene	---											
Benzo(g,h,i)perylene	---											
1-Methylnaphthalene	16,000											
Total Benzofluoranthenes	---											
cPAH TEQ	15											
PAHs (µg/kg)												
Method SW8270D-SIM												
Naphthalene	2,100											
2-Methylnaphthalene	320,000											
1-Methylnaphthalene	16,000											
Total Naphthalenes	---											
Acenaphthylene	---											
Acenaphthene	230,000											
Fluorene	150,000											
Phenanthrene	---											
Anthracene	1,600,000											
Fluoranthene	230,000											
Pyrene	240,000											
Benzo(a)anthracene	---											
Chrysene	---											
Benzo(a)pyrene	---											
Indeno(1,2,3-cd)pyrene	---											
Dibenz(a,h)anthracene	---											
Benzo(g,h,i)perylene	---											
Dibenzofuran	80,000											
Total Benzofluoranthenes	---											
cPAH TEQ	15											
PCBs (µg/kg)												
Method SW8082												
Aroclor 1242	0.72											
Aroclor 1248	220											
Aroclor 1254	0.29											
Aroclor 1260	5.4											
Total PCBs	1.8	100 U			100 U		100 U	**280**				

TABLE Q-4
SOIL ANALYTICAL DETECTS
FORMER SLIP 5 AREA
BOEING ISAACSON-THOMPSON
REMEDIAL INVESTIGATION

		FILL C: 1946-1960 Some Random Fill Along with Fill From Off-Site Sources										
					Dup of 17							
	Preliminary Cleanup Levels	16 (2.5) 8/1/1983	16 (6.5) 8/1/1983	17 (2.5) 8/1/1983	17-Dup (2.5) 8/1/1983	17 (6.5) 8/1/1983	19 (1.5) 8/1/1983	19 (3.5) 8/1/1983	19 (9) 8/1/1983	I-6 (10) 10/19/1983	I-7 (3) 10/20/1983	I-7 (5) 10/20/1983
TOTAL PETROLEUM HYDROCARBONS (mg/kg)												
NWTPH-HCID												
Diesel-Range Organics	---											
Gasoline-Range Organics	---											
Lube Oil	---											
NWTPH-Dx												
Diesel-Range Organics	2,000											
Oil-Range Organics	2,000											
NWTPH-G												
Gasoline-Range Organics	100/30											
C19 Branched Hydrocarbon	---	**0.77**										
C11 Hydrocarbon	---	**0.19**										
C18-C25 Hydrocarbons (total)	---	**3.7**										
TOTAL METALS (mg/kg)												
Methods 200.8/7471A/SW7196A												
Antimony	5											
Barium	640	**83**	**24**	**70**	**70**	**149**	**49**	**75**	**63**		**89**	
Beryllium	160											
Cadmium	1.3	**1.9**	**0.69**	**2.4**	**3.8**	**5.1**	**0.61**	**1.5**	**2.9**		**1**	
Chromium	1,480	**45**	**40**	**270**	**541**	**62**	**19**	**180**	**835**	**540**	**580**	**740**
Chromium VI	3.8											
Copper	36	**111**								**390**	**360**	**340**
Lead	250	**170**	**36**	**280**	**230**	**396**	**14**	**323**	**220**	**150**	**3900**	**630**
Mercury	1.5	**0.04**	0.03 U	0.05 U	**0.17**	**0.05**	**0.11**	**0.03**	0.03 U			
Nickel	210	**88**	**20**	**180**	**146**	**108**	**22**	**281**	**2030**			
Selenium	1.0	**0.68**	0.2 U	**0.6**	**0.22**	**0.96**	0.2 U	**0.28**	0.2 U			
Silver	170	**0.54**	0.3 U	**0.36**	**0.83**	**3**	0.3 U	**1.4**	**2.8**			
Thallium	0.67											
Zinc	1,400	**556**	**88.8**	**390**	**511**	**3640**	**32.6**	**289**	**300**	**390**	**1500**	**310**
CONVENTIONALS (mg/kg)												
Cyanide	---											
Oil and Grease	---			**1500**			**642**	**698**				

TABLE Q-4
SOIL ANALYTICAL DETECTS
FORMER SLIP 5 AREA
BOEING ISAACSON-THOMPSON
REMEDIAL INVESTIGATION

		FILL C: 1946-1960 Some Random Fill Along with Fill From Off-Site Sources													
	Preliminary Cleanup Levels	228 (3.5-4) 1/19/1988	228 (8.5-9) 1/19/1988	228 (13-13.5) 1/19/1988	228 (17-17.5) 1/19/1988	232 (3.5-4) 1/19/1988	232 (8.5) 1/19/1988	232 (13.5) 1/19/1988	236 (3.5) 1/20/1988	236 (8.5) 1/20/1988	236 (13.5) 1/20/1988	236 (18.5) 1/20/1988	244 (3.5) 1/21/1988	244 (8.5) 1/21/1988	244 (13.5) 1/21/1988
VOLATILES (µg/kg)															
Method SW8260C															
Methylene Chloride	2,400														
Acetone	510,000														
Carbon Disulfide	75,000														
1,1-Dichloroethane	710														
trans-1,2-Dichloroethene	19,000														
cis-1,2-Dichloroethene	2,600														
2-Butanone	430,000														
Bromodichloromethane	89														
Trichloroethene	51														
Benzene	93														
trans-1,3-Dichloropropene	---														
4-Methyl-2-Pentanone (MIBK)	170,000														
Toluene	100,000														
Ethylbenzene	230														
Trichlorofluoromethane	200,000														
1,1,2-Trichloro-1,2,2-trifuoroethane	1,000,000,000														
m,p-Xylene	160,000														
o-Xylene	200,000														
1,2-Dichlorobenzene	68,000														
Methyl Iodide	---														
1,3,5-Trimethylbenzene	800,000														
1,2,4-Trimethylbenzene	800,000														
Isopropylbenzene	78,000														
n-Propylbenzene	11,000														
tert-Butylbenzene	---														
sec-Butylbenzene	---														
4-Isopropyltoluene	---														
n-Butylbenzene	27,000														
Naphthalene	2,100														
1,2-Dichloroethene (total)	---														
Total Xylenes	200,000														
SEMIVOLATILES (µg/kg)															
Method SW8270D															
Phenol	1,900,000														
1,3-Dichlorobenzene	3,840														
1,4-Dichlorobenzene	3,500														
Benzyl Alcohol	8,000,000														
1,2-Dichlorobenzene	68,000														
2-Methylphenol	250,000														
4-Methylphenol	41,000														
Isophorone	---														
2,4-Dimethylphenol	95,000														
Benzoic Acid	9,000														
Naphthalene	2,100														
2-Methylnaphthalene	320,000														
Acenaphthylene	---														
Acenaphthene	230,000														
Dibenzofuran	80,000														
Fluorene	150,000														

TABLE Q-4
SOIL ANALYTICAL DETECTS
FORMER SLIP 5 AREA
BOEING ISAACSON-THOMPSON
REMEDIAL INVESTIGATION

	Preliminary Cleanup Levels	FILL C: 1946-1960 Some Random Fill Along with Fill From Off-Site Sources													
		228 (3.5-4) 1/19/1988	228 (8.5-9) 1/19/1988	228 (13-13.5) 1/19/1988	228 (17-17.5) 1/19/1988	232 (3.5-4) 1/19/1988	232 (8.5) 1/19/1988	232 (13.5) 1/19/1988	236 (3.5) 1/20/1988	236 (8.5) 1/20/1988	236 (13.5) 1/20/1988	236 (18.5) 1/20/1988	244 (3.5) 1/21/1988	244 (8.5) 1/21/1988	244 (13.5) 1/21/1988
N-Nitrosodiphenylamine	204,000														
Phenanthrene	---														
Carbazole	50,000														
Anthracene	1,600,000														
Di-n-Butylphthalate	26,000														
Fluoranthene	230,000														
Pyrene	240,000														
Butylbenzylphthalate	1,700														
Benzo(a)anthracene	---														
bis(2-Ethylhexyl)phthalate	56,600														
Chrysene	---														
Di-n-Octyl phthalate	---														
Benzo(a)pyrene	---														
Indeno(1,2,3-cd)pyrene	---														
Dibenz(a,h)anthracene	---														
Benzo(g,h,i)perylene	---														
1-Methylnaphthalene	16,000														
Total Benzofluoranthenes	---														
cPAH TEQ	15														
PAHs (µg/kg)															
Method SW8270D-SIM															
Naphthalene	2,100														
2-Methylnaphthalene	320,000														
1-Methylnaphthalene	16,000														
Total Naphthalenes	---														
Acenaphthylene	---														
Acenaphthene	230,000														
Fluorene	150,000														
Phenanthrene	---														
Anthracene	1,600,000														
Fluoranthene	230,000														
Pyrene	240,000														
Benzo(a)anthracene	---														
Chrysene	---														
Benzo(a)pyrene	---														
Indeno(1,2,3-cd)pyrene	---														
Dibenz(a,h)anthracene	---														
Benzo(g,h,i)perylene	---														
Dibenzofuran	80,000														
Total Benzofluoranthenes	---														
cPAH TEQ	15														
PCBs (µg/kg)															
Method SW8082															
Aroclor 1242	0.72														
Aroclor 1248	220														
Aroclor 1254	0.29														
Aroclor 1260	5.4														
Total PCBs	1.8														

TABLE Q-4
SOIL ANALYTICAL DETECTS
FORMER SLIP 5 AREA
BOEING ISAACSON-THOMPSON
REMEDIAL INVESTIGATION

	Preliminary Cleanup Levels	FILL C: 1946-1960 Some Random Fill Along with Fill From Off-Site Sources													
		228 (3.5-4) 1/19/1988	228 (8.5-9) 1/19/1988	228 (13-13.5) 1/19/1988	228 (17-17.5) 1/19/1988	232 (3.5-4) 1/19/1988	232 (8.5) 1/19/1988	232 (13.5) 1/19/1988	236 (3.5) 1/20/1988	236 (8.5) 1/20/1988	236 (13.5) 1/20/1988	236 (18.5) 1/20/1988	244 (3.5) 1/21/1988	244 (8.5) 1/21/1988	244 (13.5) 1/21/1988
TOTAL PETROLEUM HYDROCARBONS (mg/kg)															
NWTPH-HCID															
Diesel-Range Organics	---														
Gasoline-Range Organics	---														
Lube Oil	---														
NWTPH-Dx															
Diesel-Range Organics	2,000														
Oil-Range Organics	2,000														
NWTPH-G															
Gasoline-Range Organics	100/30														
C19 Branched Hydrocarbon	---														
C11 Hydrocarbon	---														
C18-C25 Hydrocarbons (total)	---														
TOTAL METALS (mg/kg)															
Methods 200.8/7471A/SW7196A															
Antimony	5														
Barium	640														
Beryllium	160														
Cadmium	1.3				0.5 U										
Chromium	1,480	**229**	**311**	**142**	**13**	**242**	**158**	**194**	**853**	**1380**	**4180**	**49**	**78**	**17**	**18**
Chromium VI	3.8														
Copper	36	**175**	**66**	**87**	**11**	**273**	**350**	**188**	**151**	**539**	**311**	**49**	**100**	**22**	**39**
Lead	250	**362**	**152**	**392**	**5**	**552**	**103**	**109**	**953**	**1690**	**462**	**20**	**234**	5 U	**25**
Mercury	1.5				0.01 U										
Nickel	210	**481**	**241**	**151**	**10**	**362**	**734**	**390**	**97**	**1684**	**2197**	**24**	**36**	**14**	**18**
Selenium	1.0														
Silver	170				0.2 U										
Thallium	0.67														
Zinc	1,400	**5770**	**3030**	**1130**	**44.1**	**385**	**291**	**542**	**621**	**801**	**737**	**138**	**521**	**46.8**	**84.2**
CONVENTIONALS (mg/kg)															
Cyanide	---				1.2 U										
Oil and Grease	---														

TABLE Q-4
SOIL ANALYTICAL DETECTS
FORMER SLIP 5 AREA
BOEING ISAACSON-THOMPSON
REMEDIAL INVESTIGATION

	Preliminary Cleanup Levels	FILL C: 1946-1960 Some Random Fill Along with Fill From Off-Site Sources												
		I-202s (2.5) 1/14/1988	I-202s (7.5) 1/14/1988	I-202s (12.5) 1/14/1988	I-202s (17.5) 1/14/1988	I-202s (27.5) 1/14/1988	I-203i (2.5) 1/15/1988	I-203i (7.5) 1/15/1988	I-203i (10) 1/28/1988	I-203i (12.5) 1/15/1988	I-203i (15) 1/28/1988	I-203i (18) 1/28/1988	I-203i (23) 1/28/1988	I-203i (33) 1/28/1988
VOLATILES (µg/kg)														
Method SW8260C														
Methylene Chloride	2,400			**4.4** B										**5.3** B
Acetone	510,000			**3.8**										**50**
Carbon Disulfide	75,000			ND										ND
1,1-Dichloroethane	710			ND										ND
trans-1,2-Dichloroethene	19,000													
cis-1,2-Dichloroethene	2,600													
2-Butanone	430,000													
Bromodichloromethane	89													
Trichloroethene	51			ND										ND
Benzene	93			ND										ND
trans-1,3-Dichloropropene	---													
4-Methyl-2-Pentanone (MIBK)	170,000													
Toluene	100,000			**1.4**										ND
Ethylbenzene	230			ND										ND
Trichlorofluoromethane	200,000													
1,1,2-Trichloro-1,2,2-trifuoroethane	1,000,000,000													
m,p-Xylene	160,000													
o-Xylene	200,000													
1,2-Dichlorobenzene	68,000													
Methyl Iodide	---													
1,3,5-Trimethylbenzene	800,000													
1,2,4-Trimethylbenzene	800,000													
Isopropylbenzene	78,000													
n-Propylbenzene	11,000													
tert-Butylbenzene	---													
sec-Butylbenzene	---													
4-Isopropyltoluene	---													
n-Butylbenzene	27,000													
Naphthalene	2,100													
1,2-Dichloroethene (total)	---			ND										**9** J
Total Xylenes	200,000			**4.7**										ND
SEMIVOLATILES (µg/kg)														
Method SW8270D														
Phenol	1,900,000													
1,3-Dichlorobenzene	3,840													
1,4-Dichlorobenzene	3,500													
Benzyl Alcohol	8,000,000													
1,2-Dichlorobenzene	68,000													
2-Methylphenol	250,000													
4-Methylphenol	41,000													
Isophorone	---													
2,4-Dimethylphenol	95,000													
Benzoic Acid	9,000													
Naphthalene	2,100													
2-Methylnaphthalene	320,000			ND										
Acenaphthylene	---													
Acenaphthene	230,000													
Dibenzofuran	80,000													
Fluorene	150,000													

TABLE Q-4
SOIL ANALYTICAL DETECTS
FORMER SLIP 5 AREA
BOEING ISAACSON-THOMPSON
REMEDIAL INVESTIGATION

	Preliminary Cleanup Levels	FILL C: 1946-1960 Some Random Fill Along with Fill From Off-Site Sources												
		I-202s (2.5) 1/14/1988	I-202s (7.5) 1/14/1988	I-202s (12.5) 1/14/1988	I-202s (17.5) 1/14/1988	I-202s (27.5) 1/14/1988	I-203i (2.5) 1/15/1988	I-203i (7.5) 1/15/1988	I-203i (10) 1/28/1988	I-203i (12.5) 1/15/1988	I-203i (15) 1/28/1988	I-203i (18) 1/28/1988	I-203i (23) 1/28/1988	I-203i (33) 1/28/1988
N-Nitrosodiphenylamine	204,000													
Phenanthrene	---			**160**										
Carbazole	50,000													
Anthracene	1,600,000			**33**										
Di-n-Butylphthalate	26,000													
Fluoranthene	230,000			**200**										
Pyrene	240,000			**180**										
Butylbenzylphthalate	1,700													
Benzo(a)anthracene	---			**110**										
bis(2-Ethylhexyl)phthalate	56,600			**110**										
Chrysene	---			**110**										
Di-n-Octyl phthalate	---													
Benzo(a)pyrene	---													
Indeno(1,2,3-cd)pyrene	---													
Dibenz(a,h)anthracene	---													
Benzo(g,h,i)perylene	---													
1-Methylnaphthalene	16,000													
Total Benzofluoranthenes	---													
cPAH TEQ	15													
PAHs (µg/kg)														
Method SW8270D-SIM														
Naphthalene	2,100													
2-Methylnaphthalene	320,000													
1-Methylnaphthalene	16,000													
Total Naphthalenes	---													
Acenaphthylene	---													
Acenaphthene	230,000													
Fluorene	150,000													
Phenanthrene	---													
Anthracene	1,600,000													
Fluoranthene	230,000													
Pyrene	240,000													
Benzo(a)anthracene	---													
Chrysene	---													
Benzo(a)pyrene	---													
Indeno(1,2,3-cd)pyrene	---													
Dibenz(a,h)anthracene	---													
Benzo(g,h,i)perylene	---													
Dibenzofuran	80,000													
Total Benzofluoranthenes	---													
cPAH TEQ	15													
PCBs (µg/kg)														
Method SW8082														
Aroclor 1242	0.72	ND	ND	ND	ND	**60**	ND	ND						ND
Aroclor 1248	220													
Aroclor 1254	0.29	ND	**80**	**170**	**30** J	**370**	**60**	**80**						ND
Aroclor 1260	5.4	**250**	ND	**150**	**55** J	ND	**80**	**100**						ND
Total PCBs	1.8	**250**	**80**	**320**	**85**	**430**	**140**	**180**						ND

TABLE Q-4
SOIL ANALYTICAL DETECTS
FORMER SLIP 5 AREA
BOEING ISAACSON-THOMPSON
REMEDIAL INVESTIGATION

	Preliminary Cleanup Levels	FILL C: 1946-1960 Some Random Fill Along with Fill From Off-Site Sources												
		I-202s (2.5) 1/14/1988	I-202s (7.5) 1/14/1988	I-202s (12.5) 1/14/1988	I-202s (17.5) 1/14/1988	I-202s (27.5) 1/14/1988	I-203i (2.5) 1/15/1988	I-203i (7.5) 1/15/1988	I-203i (10) 1/28/1988	I-203i (12.5) 1/15/1988	I-203i (15) 1/28/1988	I-203i (18) 1/28/1988	I-203i (23) 1/28/1988	I-203i (33) 1/28/1988
TOTAL PETROLEUM HYDROCARBONS (mg/kg)														
NWTPH-HCID														
Diesel-Range Organics	---													
Gasoline-Range Organics	---													
Lube Oil	---													
NWTPH-Dx														
Diesel-Range Organics	2,000													
Oil-Range Organics	2,000													
NWTPH-G														
Gasoline-Range Organics	100/30													
C19 Branched Hydrocarbon	---													
C11 Hydrocarbon	---													
C18-C25 Hydrocarbons (total)	---													
TOTAL METALS (mg/kg)														
Methods 200.8/7471A/SW7196A														
Antimony	5													
Barium	640													
Beryllium	160													
Cadmium	1.3			**2.6**										
Chromium	1,480	**24**	**2960**	**2230**	**47**	**899**	**133**	**3990**	**760**	**2460**	**3100**	**27**	**23**	**18**
Chromium VI	3.8													
Copper	36	**58**	**274**	**398**	**58**	**23**	**107**	**252**	**188**	**174**	**580**	**29**	**26**	**18**
Lead	250	**44**	**503**	**191**	**36**	**301**	**284**	**250**	**349**	**349**	**36**	**11**	**7**	6 U
Mercury	1.5			**0.1**										
Nickel	210	**22**	**627**	**921**	**19**	**19**	**53**	**149**	**165**	**101**	**1795**	**18**	**17**	**10**
Selenium	1.0													
Silver	170			**1.1**										
Thallium	0.67													
Zinc	1,400	**447**	**2800**	**734**	**445**	**325**	**686**	**579**	**862**	**1210**	**138**	**75.3**	**40.8**	**25.7**
CONVENTIONALS (mg/kg)														
Cyanide	---			**1.4**										
Oil and Grease	---													

TABLE Q-4
SOIL ANALYTICAL DETECTS
FORMER SLIP 5 AREA
BOEING ISAACSON-THOMPSON
REMEDIAL INVESTIGATION

		FILL C: 1946-1960 Some Random Fill Along with Fill From Off-Site Sources												
	Preliminary Cleanup Levels	I-203i (43) 1/28/1988	I-203i (48) 1/28/1988	B-7 (15) 12/17/1993	IMR-7 NW45A 10/27/2008	PBI-3 (2) PI24G 7/27/2009	PBI-3 (5) PI24H 7/27/2009	PBI-3 (8) PI24I 7/27/2009	PBI-4 (2) PI24J 7/27/2009	PBI-4 (5) PI24K 7/27/2009	PBI-4 (8) PI24L 7/27/2009	PBI-5 (2) PI24M 7/27/2009	PBI-5 (5) PI24N 7/27/2009	PBI-5 (8) PI24O 7/27/2009
VOLATILES (µg/kg)														
Method SW8260C														
Methylene Chloride	2,400													
Acetone	510,000													
Carbon Disulfide	75,000													
1,1-Dichloroethane	710													
trans-1,2-Dichloroethene	19,000													
cis-1,2-Dichloroethene	2,600													
2-Butanone	430,000													
Bromodichloromethane	89													
Trichloroethene	51													
Benzene	93													
trans-1,3-Dichloropropene	---													
4-Methyl-2-Pentanone (MIBK)	170,000													
Toluene	100,000													
Ethylbenzene	230													
Trichlorofluoromethane	200,000													
1,1,2-Trichloro-1,2,2-trifuoroethane	1,000,000,000													
m,p-Xylene	160,000													
o-Xylene	200,000													
1,2-Dichlorobenzene	68,000													
Methyl Iodide	---													
1,3,5-Trimethylbenzene	800,000													
1,2,4-Trimethylbenzene	800,000													
Isopropylbenzene	78,000													
n-Propylbenzene	11,000													
tert-Butylbenzene	---													
sec-Butylbenzene	---													
4-Isopropyltoluene	---													
n-Butylbenzene	27,000													
Naphthalene	2,100													
1,2-Dichloroethene (total)	---													
Total Xylenes	200,000													
SEMIVOLATILES (µg/kg)														
Method SW8270D														
Phenol	1,900,000													
1,3-Dichlorobenzene	3,840													
1,4-Dichlorobenzene	3,500													
Benzyl Alcohol	8,000,000													
1,2-Dichlorobenzene	68,000													
2-Methylphenol	250,000													
4-Methylphenol	41,000													
Isophorone	---													
2,4-Dimethylphenol	95,000													
Benzoic Acid	9,000													
Naphthalene	2,100													
2-Methylnaphthalene	320,000													
Acenaphthylene	---													
Acenaphthene	230,000													
Dibenzofuran	80,000													
Fluorene	150,000													

TABLE Q-4
SOIL ANALYTICAL DETECTS
FORMER SLIP 5 AREA
BOEING ISAACSON-THOMPSON
REMEDIAL INVESTIGATION

	Preliminary Cleanup Levels	FILL C: 1946-1960 Some Random Fill Along with Fill From Off-Site Sources												
		I-203i (43) 1/28/1988	I-203i (48) 1/28/1988	B-7 (15) 12/17/1993	IMR-7 NW45A 10/27/2008	PBI-3 (2) PI24G 7/27/2009	PBI-3 (5) PI24H 7/27/2009	PBI-3 (8) PI24I 7/27/2009	PBI-4 (2) PI24J 7/27/2009	PBI-4 (5) PI24K 7/27/2009	PBI-4 (8) PI24L 7/27/2009	PBI-5 (2) PI24M 7/27/2009	PBI-5 (5) PI24N 7/27/2009	PBI-5 (8) PI24O 7/27/2009
N-Nitrosodiphenylamine	204,000													
Phenanthrene	---													
Carbazole	50,000													
Anthracene	1,600,000													
Di-n-Butylphthalate	26,000													
Fluoranthene	230,000													
Pyrene	240,000													
Butylbenzylphthalate	1,700													
Benzo(a)anthracene	---													
bis(2-Ethylhexyl)phthalate	56,600													
Chrysene	---													
Di-n-Octyl phthalate	---													
Benzo(a)pyrene	---													
Indeno(1,2,3-cd)pyrene	---													
Dibenz(a,h)anthracene	---													
Benzo(g,h,i)perylene	---													
1-Methylnaphthalene	16,000													
Total Benzofluoranthenes	---													
cPAH TEQ	15													
PAHs (µg/kg)														
Method SW8270D-SIM														
Naphthalene	2,100													
2-Methylnaphthalene	320,000													
1-Methylnaphthalene	16,000													
Total Naphthalenes	---													
Acenaphthylene	---													
Acenaphthene	230,000													
Fluorene	150,000													
Phenanthrene	---													
Anthracene	1,600,000													
Fluoranthene	230,000													
Pyrene	240,000													
Benzo(a)anthracene	---													
Chrysene	---													
Benzo(a)pyrene	---													
Indeno(1,2,3-cd)pyrene	---													
Dibenz(a,h)anthracene	---													
Benzo(g,h,i)perylene	---													
Dibenzofuran	80,000													
Total Benzofluoranthenes	---													
cPAH TEQ	15													
PCBs (µg/kg)														
Method SW8082														
Aroclor 1242	0.72													
Aroclor 1248	220													
Aroclor 1254	0.29													
Aroclor 1260	5.4													
Total PCBs	1.8													

TABLE Q-4
SOIL ANALYTICAL DETECTS
FORMER SLIP 5 AREA
BOEING ISAACSON-THOMPSON
REMEDIAL INVESTIGATION

	Preliminary Cleanup Levels	FILL C: 1946-1960 Some Random Fill Along with Fill From Off-Site Sources												
		I-203i (43) 1/28/1988	I-203i (48) 1/28/1988	B-7 (15) 12/17/1993	IMR-7 NW45A 10/27/2008	PBI-3 (2) PI24G 7/27/2009	PBI-3 (5) PI24H 7/27/2009	PBI-3 (8) PI24I 7/27/2009	PBI-4 (2) PI24J 7/27/2009	PBI-4 (5) PI24K 7/27/2009	PBI-4 (8) PI24L 7/27/2009	PBI-5 (2) PI24M 7/27/2009	PBI-5 (5) PI24N 7/27/2009	PBI-5 (8) PI24O 7/27/2009
TOTAL PETROLEUM HYDROCARBONS (mg/kg)														
NWTPH-HCID														
Diesel-Range Organics	---			25 U										
Gasoline-Range Organics	---			20 U										
Lube Oil	---			50 U										
NWTPH-Dx														
Diesel-Range Organics	2,000													
Oil-Range Organics	2,000													
NWTPH-G														
Gasoline-Range Organics	100/30													
C19 Branched Hydrocarbon	---													
C11 Hydrocarbon	---													
C18-C25 Hydrocarbons (total)	---													
TOTAL METALS (mg/kg)														
Methods 200.8/7471A/SW7196A														
Antimony	5													
Barium	640				**31.4**									
Beryllium	160													
Cadmium	1.3				0.2 U	**5.7**	0.6 U	0.6 U	**2.6**	**11.1**	**1.4**	**3.5**	**1.9**	**2.3**
Chromium	1,480	**13**	**11**		**21.3**	**621**	**16**	**33**	**564**	**940**	**359**	**127**	**101**	**47**
Chromium VI	3.8													
Copper	36	**19**	**12**			**1300**	**526**	**21**	**103**	**190**	**60**	**152**	**145**	**56**
Lead	250	6 U	5 U		2 U	**768**	**37**	**29**	**209**	**796**	**114**	**138**	**166**	**59**
Mercury	1.5				0.05 U	**2**	**0.19**	**0.07**	**0.12**	**0.22**	**0.06**	**0.14**	**0.11**	**0.04**
Nickel	210	**10**	**8**											
Selenium	1.0				5 U									
Silver	170				0.3 U									
Thallium	0.67													
Zinc	1,400	**26.4**	**20.7**			**2520**	**210**	**120**	**650**	**3290**	**500**	**430**	**540**	**190**
CONVENTIONALS (mg/kg)														
Cyanide	---													
Oil and Grease	---													

TABLE Q-4
SOIL ANALYTICAL DETECTS
FORMER SLIP 5 AREA
BOEING ISAACSON-THOMPSON
REMEDIAL INVESTIGATION

	Preliminary Cleanup Levels	FILL C: 1946-1960 Some Random Fill Along with Fill From Off-Site Sources											
		PBI-6 (2) PI24P 7/27/2009	PBI-6 (5) PI24Q 7/27/2009	PBI-6 (8) PI24R 7/27/2009	PBI-7 (2) PI24S 7/27/2009	PBI-7 (5) PI24T 7/27/2009	PBI-7 (8) PI25A 7/27/2009	PBI-8 (2) PI25B 7/27/2009	PBI-8 (5) PI25C 7/27/2009	PBI-8 (8) PI25D 7/27/2009	PBI-9 (2) PI25E 7/27/2009	PBI-9 (5) PI25F 7/27/2009	PBI-9 (8) PI25G 7/27/2009
VOLATILES (µg/kg)													
Method SW8260C													
Methylene Chloride	2,400												
Acetone	510,000												
Carbon Disulfide	75,000												
1,1-Dichloroethane	710												
trans-1,2-Dichloroethene	19,000												
cis-1,2-Dichloroethene	2,600												
2-Butanone	430,000												
Bromodichloromethane	89												
Trichloroethene	51												
Benzene	93												
trans-1,3-Dichloropropene	---												
4-Methyl-2-Pentanone (MIBK)	170,000												
Toluene	100,000												
Ethylbenzene	230												
Trichlorofluoromethane	200,000												
1,1,2-Trichloro-1,2,2-trifuoroethane	1,000,000,000												
m,p-Xylene	160,000												
o-Xylene	200,000												
1,2-Dichlorobenzene	68,000												
Methyl Iodide	---												
1,3,5-Trimethylbenzene	800,000												
1,2,4-Trimethylbenzene	800,000												
Isopropylbenzene	78,000												
n-Propylbenzene	11,000												
tert-Butylbenzene	---												
sec-Butylbenzene	---												
4-Isopropyltoluene	---												
n-Butylbenzene	27,000												
Naphthalene	2,100												
1,2-Dichloroethene (total)	---												
Total Xylenes	200,000												
SEMIVOLATILES (µg/kg)													
Method SW8270D													
Phenol	1,900,000												
1,3-Dichlorobenzene	3,840												
1,4-Dichlorobenzene	3,500												
Benzyl Alcohol	8,000,000												
1,2-Dichlorobenzene	68,000												
2-Methylphenol	250,000												
4-Methylphenol	41,000												
Isophorone	---												
2,4-Dimethylphenol	95,000												
Benzoic Acid	9,000												
Naphthalene	2,100												
2-Methylnaphthalene	320,000												
Acenaphthylene	---												
Acenaphthene	230,000												
Dibenzofuran	80,000												
Fluorene	150,000												

TABLE Q-4
SOIL ANALYTICAL DETECTS
FORMER SLIP 5 AREA
BOEING ISAACSON-THOMPSON
REMEDIAL INVESTIGATION

	Preliminary Cleanup Levels	FILL C: 1946-1960 Some Random Fill Along with Fill From Off-Site Sources											
		PBI-6 (2) PI24P 7/27/2009	PBI-6 (5) PI24Q 7/27/2009	PBI-6 (8) PI24R 7/27/2009	PBI-7 (2) PI24S 7/27/2009	PBI-7 (5) PI24T 7/27/2009	PBI-7 (8) PI25A 7/27/2009	PBI-8 (2) PI25B 7/27/2009	PBI-8 (5) PI25C 7/27/2009	PBI-8 (8) PI25D 7/27/2009	PBI-9 (2) PI25E 7/27/2009	PBI-9 (5) PI25F 7/27/2009	PBI-9 (8) PI25G 7/27/2009
N-Nitrosodiphenylamine	204,000												
Phenanthrene	---												
Carbazole	50,000												
Anthracene	1,600,000												
Di-n-Butylphthalate	26,000												
Fluoranthene	230,000												
Pyrene	240,000												
Butylbenzylphthalate	1,700												
Benzo(a)anthracene	---												
bis(2-Ethylhexyl)phthalate	56,600												
Chrysene	---												
Di-n-Octyl phthalate	---												
Benzo(a)pyrene	---												
Indeno(1,2,3-cd)pyrene	---												
Dibenz(a,h)anthracene	---												
Benzo(g,h,i)perylene	---												
1-Methylnaphthalene	16,000												
Total Benzofluoranthenes	---												
cPAH TEQ	15												
PAHs (µg/kg)													
Method SW8270D-SIM													
Naphthalene	2,100												
2-Methylnaphthalene	320,000												
1-Methylnaphthalene	16,000												
Total Naphthalenes	---												
Acenaphthylene	---												
Acenaphthene	230,000												
Fluorene	150,000												
Phenanthrene	---												
Anthracene	1,600,000												
Fluoranthene	230,000												
Pyrene	240,000												
Benzo(a)anthracene	---												
Chrysene	---												
Benzo(a)pyrene	---												
Indeno(1,2,3-cd)pyrene	---												
Dibenz(a,h)anthracene	---												
Benzo(g,h,i)perylene	---												
Dibenzofuran	80,000												
Total Benzofluoranthenes	---												
cPAH TEQ	15												
PCBs (µg/kg)													
Method SW8082													
Aroclor 1242	0.72												
Aroclor 1248	220												
Aroclor 1254	0.29												
Aroclor 1260	5.4												
Total PCBs	1.8												

TABLE Q-4
SOIL ANALYTICAL DETECTS
FORMER SLIP 5 AREA
BOEING ISAACSON-THOMPSON
REMEDIAL INVESTIGATION

	Preliminary Cleanup Levels	FILL C: 1946-1960 Some Random Fill Along with Fill From Off-Site Sources											
		PBI-6 (2) PI24P 7/27/2009	PBI-6 (5) PI24Q 7/27/2009	PBI-6 (8) PI24R 7/27/2009	PBI-7 (2) PI24S 7/27/2009	PBI-7 (5) PI24T 7/27/2009	PBI-7 (8) PI25A 7/27/2009	PBI-8 (2) PI25B 7/27/2009	PBI-8 (5) PI25C 7/27/2009	PBI-8 (8) PI25D 7/27/2009	PBI-9 (2) PI25E 7/27/2009	PBI-9 (5) PI25F 7/27/2009	PBI-9 (8) PI25G 7/27/2009
TOTAL PETROLEUM HYDROCARBONS (mg/kg)													
NWTPH-HCID													
Diesel-Range Organics	---												
Gasoline-Range Organics	---												
Lube Oil	---												
NWTPH-Dx													
Diesel-Range Organics	2,000												
Oil-Range Organics	2,000												
NWTPH-G													
Gasoline-Range Organics	100/30												
C19 Branched Hydrocarbon	---												
C11 Hydrocarbon	---												
C18-C25 Hydrocarbons (total)	---												
TOTAL METALS (mg/kg)													
Methods 200.8/7471A/SW7196A													
Antimony	5												
Barium	640												
Beryllium	160												
Cadmium	1.3	**0.6**	0.6 U	**0.6**	**1.6**	**5.4**	**8.3** J	**1**	**1.2**	**6.7**	0.2 U	**6.5**	**0.6**
Chromium	1,480	**46**	**14**	**26**	**295**	**361**	**561** J	**30.1**	**57.2**	**123**	**15**	**52.2**	**233**
Chromium VI	3.8												
Copper	36	**152**	**60**	**62**	**96**	**118**	**281**	**138**	**75.2**	**47.9**	**82.4**	**102**	**62.5**
Lead	250	**55**	**7**	**32**	**200**	**400**	**660**	**205**	**698**	**460**	**3**	**212**	**189**
Mercury	1.5	**0.07**	**0.08**	**0.07**	**0.16**	**0.26**	**0.14**	**0.17**	**0.12**	0.02 U	0.02 U	**0.12**	**0.03**
Nickel	210												
Selenium	1.0												
Silver	170												
Thallium	0.67												
Zinc	1,400	**230**	**120**	**140**	**360**	**890**	**1420**	**460**	**249**	**530**	**56**	**550**	**180**
CONVENTIONALS (mg/kg)													
Cyanide	---												
Oil and Grease	---												

TABLE Q-4
SOIL ANALYTICAL DETECTS
FORMER SLIP 5 AREA
BOEING ISAACSON-THOMPSON
REMEDIAL INVESTIGATION

	Preliminary Cleanup Levels	FILL C: 1946-1960 Some Random Fill Along with Fill From Off-Site Sources											
		PBI-10 (2) PI25H 7/27/2009	PBI-10 (5) PI25I 7/27/2009	PBI-10 (8) PI25J 7/27/2009	IT-MW-17(2-3.5) TW45A 11/10/2011	IT-MW-17(5-6.5) TW45B 11/10/2011	IT-MW-17(8-9.5) TW45C 11/10/2011	IT-MW-17(11-12.5) TW45D 11/10/2011	IT-MW-17(14-15.5) TW45E 11/10/2011	IT-MW-17(15.5-17) TW45F 11/10/2011	IT-MW-17(18.5-19.75) TW45G 11/10/2011	IT-MW-17(21.25-21.5) TW45H 11/10/2011	IT-MW-17(21.5-23) TW45I 11/10/2011
VOLATILES (µg/kg)													
Method SW8260C													
Methylene Chloride	2,400				**2.5**	**3.7**	**4.4**	**4.9**	**2.0** J1	**5.5** J1	3.8 U	**2.5**	**5.0**
Acetone	510,000				**35**	**49**	**16**	**39**	**81**	**250**	**17**	**17**	**11**
Carbon Disulfide	75,000				**1.6**	1.3 U	1.2 U	1.7 U	**13**	**86**	**2.7**	**1.6**	**3.4**
1,1-Dichloroethane	710				1.1 U	1.3 U	1.2 U	1.7 U	1.3 U	3.7 U	1.9 U	1.2 U	1.2 U
trans-1,2-Dichloroethene	19,000				1.1 U	1.3 U	1.2 U	1.7 U	1.3 U	3.7 U	1.9 U	1.2 U	1.2 U
cis-1,2-Dichloroethene	2,600				1.1 U	1.3 U	1.2 U	1.7 U	1.3 U	3.7 U	1.9 U	1.2 U	1.2 U
2-Butanone	430,000				**3.7** J1	**7.7**	6.1 U	8.7 U	**10**	**50**	9.5 U	6.0 U	5.9 U
Bromodichloromethane	89				1.1 U	1.3 U	1.2 U	1.7 U	1.3 U	3.7 U	1.9 U	1.2 U	1.2 U
Trichloroethene	51				1.1 U	1.3 U	1.2 U	1.7 U	1.3 U	3.7 U	1.9 U	1.2 U	1.2 U
Benzene	93				**2.1**	**1.1** J1	1.2 U	**1.9**	**1.4**	**4.7**	1.9 U	1.2 U	1.2 U
trans-1,3-Dichloropropene	---				1.1 U	1.3 U	1.2 U	1.7 U	1.3 U	3.7 U	1.9 U	1.2 U	1.2 U
4-Methyl-2-Pentanone (MIBK)	170,000				5.6 U	6.5 U	6.1 U	8.7 U	6.7 U	18 U	9.5 U	6.0 U	5.9 U
Toluene	100,000				**1.6**	**1.1** J1	1.2 U	**1.4** J1	**1.2** J1	**4.0**	1.9 U	1.2 U	1.2 U
Ethylbenzene	230				1.1 U	1.3 U	1.2 U	1.7 U	1.3 U	3.7 U	1.9 U	1.2 U	1.2 U
Trichlorofluoromethane	200,000				1.1 U	1.3 U	1.2 U	1.7 U	1.3 U	3.7 U	1.9 U	1.2 U	1.2 U
1,1,2-Trichloro-1,2,2-trifuoroethane	1,000,000,000				2.3 U	2.6 U	2.4 U	3.5 U	2.7 U	7.4 U	3.8 U	2.4 U	2.3 U
m,p-Xylene	160,000				**0.7** J1	1.3 U	1.2 U	1.7 U	1.3 U	3.7 U	1.9 U	1.2 U	1.2 U
o-Xylene	200,000				1.1 U	1.3 U	1.2 U	1.7 U	1.3 U	3.7 U	1.9 U	1.2 U	1.2 U
1,2-Dichlorobenzene	68,000				1.1 U	1.3 U	1.2 U	1.7 U	1.3 U	3.7 U	1.9 U	1.2 U	1.2 U
Methyl Iodide	---				1.1 U	1.3 U	1.2 U	1.7 U	1.3 U	3.7 U	1.9 U	1.2 U	1.2 U
1,3,5-Trimethylbenzene	800,000				1.1 U	1.3 U	1.2 U	1.7 U	1.3 U	3.7 U	1.9 U	1.2 U	1.2 U
1,2,4-Trimethylbenzene	800,000				1.1 U	1.3 U	1.2 U	1.7 U	**1.0** J1	3.7 U	1.9 U	1.2 U	1.2 U
Isopropylbenzene	78,000				1.1 U	1.3 U	1.2 U	1.7 U	1.3 U	3.7 U	1.9 U	1.2 U	1.2 U
n-Propylbenzene	11,000				1.1 U	1.3 U	1.2 U	1.7 U	1.3 U	3.7 U	1.9 U	1.2 U	1.2 U
tert-Butylbenzene	---				1.1 U	1.3 U	1.2 U	1.7 U	1.3 U	3.7 U	1.9 U	1.2 U	1.2 U
sec-Butylbenzene	---				1.1 U	1.3 U	1.2 U	1.7 U	**0.9** J1	**2.7** J1	1.9 U	1.2 U	1.2 U
4-Isopropyltoluene	---				1.1 U	1.3 U	1.2 U	1.7 U	**0.7** J1	**2.0** J1	1.9 U	1.2 U	1.2 U
n-Butylbenzene	27,000				1.1 U	1.3 U	1.2 U	1.7 U	1.3 U	3.7 U	1.9 U	1.2 U	1.2 U
Naphthalene	2,100				5.6 U	6.5 U	6.1 U	**2.2** J1	**2.6** J1	**6.0** J1	9.5 U	6.0 U	5.9 U
1,2-Dichloroethene (total)	---												
Total Xylenes	200,000												
SEMIVOLATILES (µg/kg)													
Method SW8270D													
Phenol	1,900,000				18 U	**9.0** J1	18 U	19 UJ	**33**	**330**	**80**	18 U	**9.8** J1
1,3-Dichlorobenzene	3,840				18 U	18 U	18 U	19 U	18 U	19 U	19 U	18 U	18 U
1,4-Dichlorobenzene	3,500				18 U	18 U	18 U	19 U	18 U	19 U	19 U	18 U	18 U
Benzyl Alcohol	8,000,000				18 U	18 U	18 U	19 U	18 U	**32**	19 U	18 U	**30**
1,2-Dichlorobenzene	68,000				18 U	18 U	18 U	19 U	18 U	19 U	19 U	18 U	18 U
2-Methylphenol	250,000				18 U	18 U	18 U	19 UJ	18 U	**15** J1	**50**	18 U	18 U
4-Methylphenol	41,000				36 U	36 U	36 U	37 UJ	**27** J1	**840**	**180**	37 U	36 U
Isophorone	---				18 U	18 U	18 U	19 U	18 U	19 U	19 U	18 U	18 U
2,4-Dimethylphenol	95,000				36 U	36 U	36 U	37 UJ	36 U	38 U	**62**	37 U	36 U
Benzoic Acid	9,000				360 U	360 U	360 U	370 UJ	360 U	**120** J1	380 U	370 U	360 U
Naphthalene	2,100				**24**	**9.9** J1	18 U	**39**	**140**	**280**	**84**	18 U	18 U
2-Methylnaphthalene	320,000				**30**	**15** J1	18 U	**63**	**110**	**140**	**45**	18 U	18 U
Acenaphthylene	---				18 U	18 U	18 U	19 U	18 U	19 U	**12** J1	18 U	18 U
Acenaphthene	230,000				**10** J1	18 U	18 U	19 U	**18**	**44**	**25**	18 U	18 U
Dibenzofuran	80,000				**13** J1	18 U	18 U	**10** J1	18 U	**59**	**59**	18 U	18 U
Fluorene	150,000				**9.0** J1	18 U	18 U	19 U	**18**	**55**	**49**	18 U	18 U

TABLE Q-4
SOIL ANALYTICAL DETECTS
FORMER SLIP 5 AREA
BOEING ISAACSON-THOMPSON
REMEDIAL INVESTIGATION

	Preliminary Cleanup Levels	FILL C: 1946-1960 Some Random Fill Along with Fill From Off-Site Sources											
		PBI-10 (2) PI25H 7/27/2009	PBI-10 (5) PI25I 7/27/2009	PBI-10 (8) PI25J 7/27/2009	IT-MW-17(2-3.5) TW45A 11/10/2011	IT-MW-17(5-6.5) TW45B 11/10/2011	IT-MW-17(8-9.5) TW45C 11/10/2011	IT-MW-17(11-12.5) TW45D 11/10/2011	IT-MW-17(14-15.5) TW45E 11/10/2011	IT-MW-17(15.5-17) TW45F 11/10/2011	IT-MW-17(18.5-19.75) TW45G 11/10/2011	IT-MW-17(21.25-21.5) TW45H 11/10/2011	IT-MW-17(21.5-23) TW45I 11/10/2011
N-Nitrosodiphenylamine	204,000				18 U	18 U	18 U	19 U	**48**	**130**	19 U	18 U	18 U
Phenanthrene	---				**190**	**54**	18 U	**120**	**360**	**290**	**170**	18 U	18 U
Carbazole	50,000				**24**	18 U	18 U	**10** J1	18 U	19 U	19 U	18 U	18 U
Anthracene	1,600,000				**35**	18 U	18 U	19 U	**29**	**82**	**41**	18 U	18 U
Di-n-Butylphthalate	26,000				**20**	18 U	18 U	19 U	18 U	**2200**	19 U	**20**	18 U
Fluoranthene	230,000				**260**	**59**	18 U	**66**	**600**	**270**	**70**	18 U	18 U
Pyrene	240,000				**320**	**100**	**15** J1	**68**	**910**	**510**	**73**	18 U	**11** J1
Butylbenzylphthalate	1,700				18 U	18 U	18 U	19 U	18 U	19 U	19 U	18 U	18 U
Benzo(a)anthracene	---				**140**	**57**	18 U	**35**	**260**	**140**	**19**	18 U	18 U
bis(2-Ethylhexyl)phthalate	56,600				62 U	55 U	33 U	23 U	48 U	84 U	35 U	53 U	48 U
Chrysene	---				**220**	**130**	**10** J1	**48**	**490**	**310**	**19**	18 U	18 U
Di-n-Octyl phthalate	---				18 U	18 U	18 U	19 U	18 U	19 U	19 U	18 U	18 U
Benzo(a)pyrene	---				**160**	**51**	18 U	**31**	**380**	**120**	**13** J1	18 U	18 U
Indeno(1,2,3-cd)pyrene	---				**70**	**31**	18 U	**20**	**120**	**28**	19 U	18 U	18 U
Dibenz(a,h)anthracene	---				**32**	**11** J1	18 U	19 U	**31**	19 U	19 U	18 U	18 U
Benzo(g,h,i)perylene	---				**88**	**34**	18 U	**22**	**140**	**35**	19 U	18 U	18 U
1-Methylnaphthalene	16,000				**17** J1	**9.9** J1	18 U	**22**	**67**	**110**	**34**	18 U	18 U
Total Benzofluoranthenes	---				**270**	**94**	18 U	**58**	**560**	**220**	**24**	18 U	18 U
cPAH TEQ	15				**213.4**	**71.6** J	**0.1**	**42.78**	**482**	**161.9**	**17.49** J	ND	ND
PAHs (µg/kg)													
Method SW8270D-SIM													
Naphthalene	2,100				**31**	**18**	**3.4** J1	**100**	**120**	**220**	**110**	**5.2**	**5.4**
2-Methylnaphthalene	320,000				**39**	**19**	**2.6** J1	**160**	**110**	**120**	**52**	**3.2** J1	**4.4** J1
1-Methylnaphthalene	16,000				**26**	**13**	4.7 U	**73**	**82**	**100**	**37**	**3.6** J1	**4.0** J1
Total Naphthalenes	---				**96**	**50**	**6** J1	**333**	**312**	**440**	**199**	**12** J1	**13.8** J1
Acenaphthylene	---				**8.6** J1	**2.6** J1	4.7 U	**8.5**	11 U	**32**	**17**	4.5 U	4.6 U
Acenaphthene	230,000				8.8 U	4.5 U	4.7 U	4.8 U	**58**	**93**	**28**	**2.5** J1	**5.5**
Fluorene	150,000				**12**	4.5 U	4.7 U	**3.3** J1	**37**	**85**	**49**	**2.5** J1	**4.1** J1
Phenanthrene	---				**190**	**49**	**8.1**	**200**	**440**	**410**	**170**	**11**	**56**
Anthracene	1,600,000				**39**	**5.7**	4.7 U	**14**	**56**	**120**	**54**	4.5 U	**7.5**
Fluoranthene	230,000				**310**	**78**	**17**	**130**	**450**	**410**	**140**	**11**	**32**
Pyrene	240,000				**350**	**100**	**18**	**98**	**600**	**590**	**110**	**11**	**44**
Benzo(a)anthracene	---				**160**	**52**	**9.0**	**57**	**170**	**120**	**19**	**3.9** J1	**16**
Chrysene	---				**240**	**110**	**12**	**68**	**280**	**260**	**21**	**6.3**	**17**
Benzo(a)pyrene	---				**210**	**64**	**12**	**63**	**240**	**140**	**25**	**5.0**	**16**
Indeno(1,2,3-cd)pyrene	---				**120**	**27**	**6.4**	**30**	**88**	**57**	**7.7**	4.5 U	**6.1**
Dibenz(a,h)anthracene	---				**46**	**16**	4.7 U	**14**	**38**	**18**	4.7 U	4.5 U	4.6 U
Benzo(g,h,i)perylene	---				**140**	**39**	**7.5**	**39**	**130**	**94**	**7.9**	**3.7** J1	**7.3**
Dibenzofuran	80,000				**17**	**5.0**	4.7 U	**21**	**22**	**67**	**80**	**3.3** J1	**2.9** J1
Total Benzofluoranthenes	---				**320**	**86**	**19**	**100**	**290**	**180**	**21**	**9.2**	**21**
cPAH TEQ	15				**277**	**83**	**16**	**84**	**301**	**180**	**30**	**6.4** J	**20** J
PCBs (µg/kg)													
Method SW8082													
Aroclor 1242	0.72				32 U	30 U	30 U	31 U	30 U	32 U	30 U	32 U	32 U
Aroclor 1248	220				32 U	91 U	91 U	31 U	110 U	110 U	30 U	32 U	32 U
Aroclor 1254	0.29				**85**	**260**	**320**	**66**	**230**	**270**	30 U	32 U	32 U
Aroclor 1260	5.4				**77**	**250**	**240**	**33**	**190**	**200**	30 U	32 U	32 U
Total PCBs	1.8				**162**	**510**	**560**	**99**	**420**	**470**	ND	ND	ND

TABLE Q-4
SOIL ANALYTICAL DETECTS
FORMER SLIP 5 AREA
BOEING ISAACSON-THOMPSON
REMEDIAL INVESTIGATION

	Preliminary Cleanup Levels	FILL C: 1946-1960 Some Random Fill Along with Fill From Off-Site Sources											
		PBI-10 (2) PI25H 7/27/2009	PBI-10 (5) PI25I 7/27/2009	PBI-10 (8) PI25J 7/27/2009	IT-MW-17(2-3.5) TW45A 11/10/2011	IT-MW-17(5-6.5) TW45B 11/10/2011	IT-MW-17(8-9.5) TW45C 11/10/2011	IT-MW-17(11-12.5) TW45D 11/10/2011	IT-MW-17(14-15.5) TW45E 11/10/2011	IT-MW-17(15.5-17) TW45F 11/10/2011	IT-MW-17(18.5-19.75) TW45G 11/10/2011	IT-MW-17(21.25-21.5) TW45H 11/10/2011	IT-MW-17(21.5-23) TW45I 11/10/2011
TOTAL PETROLEUM HYDROCARBONS (mg/kg)													
NWTPH-HCID													
Diesel-Range Organics	---												
Gasoline-Range Organics	---												
Lube Oil	---												
NWTPH-Dx													
Diesel-Range Organics	2,000				**160**	**23**	5.2 U	**51** J	**240**	**900**	**9.5**	6.2 U	5.8 U
Oil-Range Organics	2,000				**380**	**72**	10 U	**77** J	**580**	**1800**	**15**	12 U	12 U
NWTPH-G													
Gasoline-Range Organics	100/30				7.0 U	9.2 U	6.1 U	10 U	**9.9**	**33**	9.5 U	8.2 U	6.7 U
C19 Branched Hydrocarbon	---												
C11 Hydrocarbon	---												
C18-C25 Hydrocarbons (total)	---												
TOTAL METALS (mg/kg)													
Methods 200.8/7471A/SW7196A													
Antimony	5				**0.3**	**0.3**	0.2 U	**3.9**	**0.6**	**0.4**	**0.4**	0.2 U	0.2 U
Barium	640				**165**	**71.1**	**37.6**	**83.6**	**645**	**295**	**71.0**	**57.3**	**35.5**
Beryllium	160				**0.3**	**0.2**	0.2 U	0.3 U	**0.3**	0.3 U	0.3 U	0.2 U	0.2 U
Cadmium	1.3	**0.3**	**0.3**	**1.5**	**3.0**	**6.2**	**0.1**	**28.1**	**15.3**	**2.5**	0.1 U	0.1 U	**1.1**
Chromium	1,480	**26.6**	**51.9**	**790**	**138**	**108**	**31.2**	**247**	**238**	**58.4**	**11.3**	**15.1**	**25.6**
Chromium VI	3.8				0.429 U	0.459 U	0.424 U	**1.79**	0.585 U	**8.32**	0.564 U	**0.587**	0.489 U
Copper	36	**68.7**	**78.6**	**301**	**82.6**	**318**	**41.8**	**279**	**353**	**1070**	**27.3**	**18.7**	**47.3**
Lead	250	**65**	**175**	**4200**	**210**	**467**	**9.3**	**2160**	**1120**	**338**	**16.3**	**10.9**	**81.0**
Mercury	1.5	**0.03**	**0.03**	0.02 U	**0.37**	**0.06**	**0.03**	**0.10**	**0.10**	**0.45**	0.03 U	**0.08**	0.02 U
Nickel	210				**46.0**	**330**	**37.5**	**164**	**171**	**33.7**	**10.9**	**9.8**	**39.4**
Selenium	1.0				0.6 U	0.6 U	0.5 U	0.7 U	0.7 U	0.9 U	0.7 U	0.6 U	0.6 U
Silver	170				**0.3**	**0.7**	0.2 U	**1.7**	**0.8**	**0.5**	0.3 U	0.2 U	0.2 U
Thallium	0.67				0.2 U	0.2 U	0.2 U	0.3 U	0.3 U	**1.1**	0.3 U	0.2 U	0.2 U
Zinc	1,400	**131**	**194**	**630**	**470**	**1220**	**78**	**5780**	**9040**	**1400**	**60**	**38**	**224**
CONVENTIONALS (mg/kg)													
Cyanide	---												
Oil and Grease	---												

TABLE Q-4
SOIL ANALYTICAL DETECTS
FORMER SLIP 5 AREA
BOEING ISAACSON-THOMPSON
REMEDIAL INVESTIGATION

	Preliminary Cleanup Levels	FILL C: 1946-1960 Some Random Fill Along with Fill From Off-Site Sources										
		IT-MW-19(2-3.5) TW35C 11/09/2011	IT-MW-19(5-6.5) TW35D 11/09/2011	IT-MW-19(8-9.5) TW35E 11/09/2011	IT-MW-19(13-14.5) TW35F 11/09/2011	IT-SB-3(2-3.5) TW27E 11/08/2011	IT-SB-3(5-5.5) TX02I 11/14/2011	IT-SB-3(6.5-7) TX02J 11/14/2011	IT-SB-4(2-3.5) TU90E 11/01/2011	IT-SB-4(5-6.5) TU90R 11/01/2011	IT-SB-4(8-9) TU90F 11/01/2011	IT-SB-4(11.5-13) TU90G 11/01/2011
VOLATILES (µg/kg)												
Method SW8260C												
Methylene Chloride	2,400	**4.3**	**3.0**	**2.8**	**2.3** J1	1.2 U	1.2 U	0.6 U	**2.0** J1	**1.6** J, J1	**2.4** J1	**1.6** J1
Acetone	510,000	**27**	**23**	**34**	**20**	1.2 UJ	1.2 UJ	0.6 UJ	**66** J	**36** J	20 UJ	18 UJ
Carbon Disulfide	75,000	1.3 U	1.2 U	**2.3**	**1.7**	1.2 U	1.2 U	0.6 U	**2.3**	1.4 U	1.4 U	**1.3**
1,1-Dichloroethane	710	1.3 U	1.2 U	1.3 U	1.2 U	**3.6**	**2.5**	**1.0** J1	1.2 U	1.4 U	1.4 U	1.2 U
trans-1,2-Dichloroethene	19,000	1.3 U	1.2 U	1.3 U	1.2 U	**8.6** J	**14** J	**33** J	1.2 U	1.4 U	1.4 U	1.2 U
cis-1,2-Dichloroethene	2,600	1.3 U	1.2 U	1.3 U	1.2 U	1.2 U	1.2 U	**17**	1.2 U	1.4 U	1.4 U	1.2 U
2-Butanone	430,000	6.4 U	6.2 U	**3.6** J1	6.2 U	1.2 U	1.2 UJ	0.6 UJ	**7.7**	7.2 U	6.8 U	5.8 U
Bromodichloromethane	89	1.3 U	1.2 U	1.3 U	1.2 U	5.9 U	6.0 U	**5.6**	1.2 U	1.4 U	1.4 U	1.2 U
Trichloroethene	51	1.3 U	1.2 U	1.3 U	1.2 U	5.9 U	6.0 U	3.2 U	1.2 U	1.4 U	1.4 U	1.2 U
Benzene	93	1.3 U	1.2 U	**2.4**	1.2 U	1.2 U	1.2 U	0.6 U	**0.8** J1	**1.2** J1	**0.8** J1	1.2 U
trans-1,3-Dichloropropene	---	1.3 U	1.2 U	1.3 U	1.2 U	1.2 U	**1.5**	**0.4** J1	1.2 U	1.4 U	1.4 U	1.2 U
4-Methyl-2-Pentanone (MIBK)	170,000	6.4 U	6.2 U	6.4 U	6.2 U	1.2 U	1.2 U	**0.5** J1	5.8 U	7.2 U	6.8 U	5.8 U
Toluene	100,000	1.3 U	**0.8** J1	**0.9** J1	1.2 U	5.9 U	6.0 U	3.2 U	**0.8** J1	1.4 U	1.4 U	1.2 U
Ethylbenzene	230	1.3 U	1.2 U	1.3 U	1.2 U	1.2 U	1.2 U	0.6 U	1.2 U	1.4 U	1.4 U	1.2 U
Trichlorofluoromethane	200,000	1.3 U	1.2 U	1.3 U	1.2 U	1.2 U	1.2 U	**0.3** J1	1.2 U	1.4 U	1.4 U	1.2 U
1,1,2-Trichloro-1,2,2-trifuoroethane	1,000,000,000	2.6 U	2.5 U	2.6 U	2.5 U	1.2 U	1.2 U	0.6 U	2.3 U	2.9 U	2.7 U	2.3 U
m,p-Xylene	160,000	1.3 U	1.2 U	1.3 U	1.2 U	1.2 U	1.2 U	0.6 U	1.2 U	1.4 U	1.4 U	1.2 U
o-Xylene	200,000	1.3 U	1.2 U	1.3 U	1.2 U	1.2 U	1.2 U	0.6 U	1.2 U	1.4 U	1.4 U	1.2 U
1,2-Dichlorobenzene	68,000	1.3 U	1.2 U	1.3 U	1.2 U	1.2 U	1.2 U	**0.3** J1	1.2 U	1.4 U	1.4 U	1.2 U
Methyl Iodide	---	1.3 U	1.2 U	1.3 U	1.2 U	1.2 U	1.2 U	0.6 U	1.2 U	1.4 U	1.4 U	1.2 U
1,3,5-Trimethylbenzene	800,000	1.3 U	1.2 U	1.3 U	1.2 U	1.2 U	1.2 U	0.6 U	1.2 U	1.4 U	1.4 U	1.2 U
1,2,4-Trimethylbenzene	800,000	1.3 U	1.2 U	1.3 U	1.2 U	5.9 U	6.0 U	3.2 U	**0.6** J1	1.4 U	1.4 U	1.2 U
Isopropylbenzene	78,000	1.3 U	1.2 U	1.3 U	1.2 U	1.2 U	1.2 U	0.6 U	1.2 U	1.4 U	1.4 U	1.2 U
n-Propylbenzene	11,000	1.3 U	1.2 U	1.3 U	1.2 U	1.2 U	1.2 UJ	0.6 UJ	1.2 U	1.4 U	1.4 U	1.2 U
tert-Butylbenzene	---	1.3 U	1.2 U	1.3 U	1.2 U	1.2 U	1.2 U	0.6 U	1.2 U	1.4 U	1.4 U	1.2 U
sec-Butylbenzene	---	1.3 U	1.2 U	1.3 U	1.2 U	1.2 U	1.2 U	0.6 U	1.2 U	1.4 U	1.4 U	1.2 U
4-Isopropyltoluene	---	1.3 U	1.2 U	1.3 U	1.2 U	1.2 U	1.2 U	0.6 U	1.2 U	1.4 U	1.4 U	1.2 U
n-Butylbenzene	27,000	1.3 U	1.2 U	1.3 U	1.2 U	1.2 U	1.2 U	0.6 U	1.2 U	1.4 U	1.4 U	1.2 U
Naphthalene	2,100	6.4 U	6.2 U	6.4 U	6.2 U	1.2 U	1.2 U	0.6 U	5.8 U	7.2 U	6.8 U	5.8 U
1,2-Dichloroethene (total)	---					1.2 U	1.2 U	0.6 U				
Total Xylenes	200,000					5.9 U	6.0 U	3.2 U				
SEMIVOLATILES (µg/kg)												
Method SW8270D												
Phenol	1,900,000	20 U	19 U	18 U	19 U	19 U	18 U	20 UJ	19 U	19 U	19 U	18 U
1,3-Dichlorobenzene	3,840	20 U	19 U	18 U	19 U	19 U	18 U	**14** J1	19 U	19 U	19 U	18 U
1,4-Dichlorobenzene	3,500	20 U	19 U	18 U	19 U	19 U	18 U	20 U	19 U	19 U	19 U	18 U
Benzyl Alcohol	8,000,000	20 U	19 U	18 U	19 U	19 U	18 U	20 U	19 U	19 U	19 U	18 U
1,2-Dichlorobenzene	68,000	20 U	19 U	18 U	19 U	19 U	18 U	20 U	19 U	19 U	19 U	18 U
2-Methylphenol	250,000	20 U	19 U	18 U	19 U	19 U	18 U	20 UJ	19 U	19 U	19 U	18 U
4-Methylphenol	41,000	39 U	37 U	37 U	38 U	39 U	35 U	40 UJ	37 U	38 U	38 U	37 U
Isophorone	---	20 U	19 U	18 U	19 U	19 U	18 U	**300**	19 U	19 U	19 U	18 U
2,4-Dimethylphenol	95,000	39 U	37 U	37 UJ	38 U	39 U	35 U	40 UJ	37 UJ	38 UJ	38 UJ	37 UJ
Benzoic Acid	9,000	390 U	370 U	370 U	380 U	390 U	350 U	400 UJ	370 UJ	380 UJ	380 UJ	370 UJ
Naphthalene	2,100	**9.8** J1	19 U	**13** J1	**15** J1	19 U	18 U	**25**	**110**	**20**	19 U	18 U
2-Methylnaphthalene	320,000	**14** J1	19 U	**25**	**32**	19 U	18 U	**14** J1	**190**	**23**	19 U	18 U
Acenaphthylene	---	20 U	19 U	18 U	19 U	19 U	18 U	20 U	19 U	19 U	19 U	18 U
Acenaphthene	230,000	20 U	19 U	18 U	19 U	19 U	18 U	20 U	19 U	19 U	19 U	18 U
Dibenzofuran	80,000	20 U	19 U	18 U	**10** J1	19 U	18 U	20 U	**36**	19 U	19 U	18 U
Fluorene	150,000	20 U	19 U	18 U	19 U	19 U	18 U	20 U	19 U	19 U	19 U	18 U

TABLE Q-4
SOIL ANALYTICAL DETECTS
FORMER SLIP 5 AREA
BOEING ISAACSON-THOMPSON
REMEDIAL INVESTIGATION

	Preliminary Cleanup Levels	FILL C: 1946-1960 Some Random Fill Along with Fill From Off-Site Sources										
		IT-MW-19(2-3.5) TW35C 11/09/2011	IT-MW-19(5-6.5) TW35D 11/09/2011	IT-MW-19(8-9.5) TW35E 11/09/2011	IT-MW-19(13-14.5) TW35F 11/09/2011	IT-SB-3(2-3.5) TW27E 11/08/2011	IT-SB-3(5-5.5) TX02I 11/14/2011	IT-SB-3(6.5-7) TX02J 11/14/2011	IT-SB-4(2-3.5) TU90E 11/01/2011	IT-SB-4(5-6.5) TU90R 11/01/2011	IT-SB-4(8-9) TU90F 11/01/2011	IT-SB-4(11.5-13) TU90G 11/01/2011
N-Nitrosodiphenylamine	204,000	20 U	19 U	18 U	19 U	19 U	18 U	20 U	19 U	19 U	19 U	18 U
Phenanthrene	---	**98**	**70**	**26**	**24**	19 U	**16** J1	**33**	**89**	**27**	19 U	18 U
Carbazole	50,000	**16** J, J1	**11** J, J1	18 UJ	19 UJ	19 U	18 U	20 U	**11** J, J1	19 U	19 UJ	18 UJ
Anthracene	1,600,000	**19** J1	**16** J1	18 U	19 U	19 U	18 U	20 U	**15** J1	19 U	19 U	18 U
Di-n-Butylphthalate	26,000	20 U	19 U	18 U	19 U	19 U	18 U	20 U	**150**	19 U	19 U	18 U
Fluoranthene	230,000	**150**	**110**	**33**	**20**	19 U	**19**	**19** J1	**62**	**23**	19 U	18 U
Pyrene	240,000	**140**	**120**	**39**	**27**	19 U	**36** J	**36** J	**69**	**26**	19 U	18 U
Butylbenzylphthalate	1,700	20 U	19 U	18 U	19 U	19 U	18 U	20 U	19 U	19 U	19 U	18 U
Benzo(a)anthracene	---	**69**	**90**	**20**	19 U	19 U	**12** J1	**11** J1	**41**	19 U	19 U	18 U
bis(2-Ethylhexyl)phthalate	56,600	25 U	56 U	33 U	32 U	**21** J1	**530**	25 U	58 U	45 U	24 U	23 U
Chrysene	---	**78**	**99**	**28**	**10** J1	19 U	**22**	**18** J1	**68**	**24**	19 U	18 U
Di-n-Octyl phthalate	---	20 U	19 U	18 U	19 U	19 U	18 U	20 U	19 U	19 U	19 U	18 U
Benzo(a)pyrene	---	**90**	**94**	**28**	19 U	19 U	**8.8** J1	**11** J1	**41**	**14** J1	19 U	18 U
Indeno(1,2,3-cd)pyrene	---	**53**	**48**	**17** J1	19 U	19 U	18 U	20 U	**32**	19 U	19 U	18 U
Dibenz(a,h)anthracene	---	**14** J1	**15** J1	18 U	19 U	19 U	18 U	20 U	**14** J1	19 U	19 U	18 U
Benzo(g,h,i)perylene	---	**64**	**56**	**24**	19 U	19 U	**12** J1	20 U	**44**	**16** J1	19 U	18 U
1-Methylnaphthalene	16,000	**14** J1	19 U	**17** J1	**26**	19 U	18 U	20 U	**130**	**14** J1	19 U	18 U
Total Benzofluoranthenes	---	**130**	**150**	**44**	**12** J1	19 U	**22**	**21**	**99**	**24**	19 U	18 U
cPAH TEQ	15	**117** J	**125**	**36** J	**1** J	ND	**12.42** J	**14.38** J	**60** J	**17** J	ND	ND
PAHs (µg/kg)												
Method SW8270D-SIM												
Naphthalene	2,100	**18**	**6.9**	**6.0**	**10**	4.8 U	**5.9**	**13**	**100**	**14**	4.4 U	4.7 U
2-Methylnaphthalene	320,000	**21**	**7.2**	**8.2**	**17**	4.8 U	**11**	**8.4**	**170**	**11**	**2.3** J1	4.7 U
1-Methylnaphthalene	16,000	**17**	**7.0**	**7.1**	**17**	4.8 U	**9.2**	**5.8**	**140**	**12**	**2.4** J1	4.7 U
Total Naphthalenes	---	**56**	**21.1**	**21.3**	**44**	4.8 U	**26.1**	**27.2**	**410**	**37**	**4.7** J1	4.7 U
Acenaphthylene	---	**4.2** J1	4.6 U	4.6 U	4.8 U	4.8 U	4.3 U	4.8 U	**9.0**	4.6 U	4.4 U	4.7 U
Acenaphthene	230,000	**15**	**3.8** J1	4.6 U	**6.8**	4.8 U	4.3 U	**5.8**	8.0 U	4.6 U	4.4 U	4.7 U
Fluorene	150,000	**9.4**	**2.7** J1	4.6 U	**4.5** J1	4.8 U	**2.5** J1	**2.9** J1	8.0 U	**2.7** J1	4.4 U	4.7 U
Phenanthrene	---	**140**	**39**	**20**	**22**	4.8 U	**27**	**20**	**78**	**33**	**3.8** J1	**5.9**
Anthracene	1,600,000	**29**	**9.7**	**3.1** J1	**3.9** J1	4.8 U	**3.0** J1	**3.4** J1	**19**	**6.1**	4.4 U	4.7 U
Fluoranthene	230,000	**210**	**62**	**29**	**25**	4.8 U	**30**	**20**	**58**	**29**	4.4 U	**3.5** J1
Pyrene	240,000	**170**	**69**	**28**	**21**	4.8 U	**34**	**21**	**62**	**26**	4.4 U	**3.0** J1
Benzo(a)anthracene	---	**100**	**43**	**17**	**7.4**	4.8 U	**19**	**9.1**	**35**	**11**	4.4 U	**2.6** J1
Chrysene	---	**110**	**53**	**22**	**9.6**	4.8 U	**42**	**14**	**56**	**22**	4.4 U	4.7 U
Benzo(a)pyrene	---	**110**	**49**	**24**	**14**	4.8 U	**19**	**8.2**	**55**	**19**	4.4 U	4.7 U
Indeno(1,2,3-cd)pyrene	---	**57**	**25**	**14**	**4.3** J1	4.8 U	**11**	4.8 U	**32**	**11**	4.4 U	4.7 U
Dibenz(a,h)anthracene	---	**21**	**11**	**6.1**	4.8 U	4.8 U	**7.4**	**2.8** J1	**16**	4.6 U	4.4 U	4.7 U
Benzo(g,h,i)perylene	---	**77**	**30**	**16**	**5.5**	4.8 U	**22**	**4.8**	**43**	**13**	4.4 U	4.7 U
Dibenzofuran	80,000	**9.8**	**3.3** J1	**3.9** J1	**9.3**	4.8 U	**4.4**	4.8 U	**40**	**5.9**	4.4 U	4.7 U
Total Benzofluoranthenes	---	**170**	**63**	**37**	**17**	4.8 U	**31**	**12**	**110**	**34**	4.4 U	4.7 U
cPAH TEQ	15	**146**	**64**	**32**	**17** J	ND	**26**	**10.7** J	**75**	**25**	ND	**0.3** J
PCBs (µg/kg)												
Method SW8082												
Aroclor 1242	0.72	30 U	32 U	31 U	31 U	31 U	31 U	30 U	160 U	32 U	30 U	31 U
Aroclor 1248	220	30 U	32 U	31 U	31 U	31 U	31 U	30 U	310 U	32 U	30 U	31 U
Aroclor 1254	0.29	30 U	32 U	31 U	31 U	31 U	**120**	**54**	**990**	**49**	30 U	31 U
Aroclor 1260	5.4	30 U	32 U	31 U	31 U	31 U	**25** J1	**28** J1	**790**	32 U	30 U	31 U
Total PCBs	1.8	ND	ND	ND	ND	ND	**145** J	**82**	**1780**	**49**	ND	ND

TABLE Q-4
SOIL ANALYTICAL DETECTS
FORMER SLIP 5 AREA
BOEING ISAACSON-THOMPSON
REMEDIAL INVESTIGATION

	Preliminary Cleanup Levels	FILL C: 1946-1960 Some Random Fill Along with Fill From Off-Site Sources										
		IT-MW-19(2-3.5) TW35C 11/09/2011	IT-MW-19(5-6.5) TW35D 11/09/2011	IT-MW-19(8-9.5) TW35E 11/09/2011	IT-MW-19(13-14.5) TW35F 11/09/2011	IT-SB-3(2-3.5) TW27E 11/08/2011	IT-SB-3(5-5.5) TX02I 11/14/2011	IT-SB-3(6.5-7) TX02J 11/14/2011	IT-SB-4(2-3.5) TU90E 11/01/2011	IT-SB-4(5-6.5) TU90R 11/01/2011	IT-SB-4(8-9) TU90F 11/01/2011	IT-SB-4(11.5-13) TU90G 11/01/2011
TOTAL PETROLEUM HYDROCARBONS (mg/kg)												
NWTPH-HCID												
Diesel-Range Organics	---											
Gasoline-Range Organics	---											
Lube Oil	---											
NWTPH-Dx												
Diesel-Range Organics	2,000	**18**	5.6 U	**6.6**	**11**	5.3 U	**23**	**24**	**69**	**28**	5.6 U	6.5 U
Oil-Range Organics	2,000	**170**	**12**	**15**	13 U	11 U	**100**	**65**	**220**	**71**	11 U	13 U
NWTPH-G												
Gasoline-Range Organics	100/30	6.4 U	6.7 U	6.3 U	7.7 U	5.5 U	5.6 U	4.1 U	**12**	9.2 U	7.4 U	7.9 U
C19 Branched Hydrocarbon	---											
C11 Hydrocarbon	---											
C18-C25 Hydrocarbons (total)	---											
TOTAL METALS (mg/kg)												
Methods 200.8/7471A/SW7196A												
Antimony	5	0.2 U	0.2 U	0.2 U	0.2 U	0.2 U	0.2 U	**0.7**	0.2 U	0.2 U	0.2 U	0.3 U
Barium	640	**47.9**	**46.2**	**28.1**	**45.5**	**38.8**	**60.3**	**30.1**	**154**	**58.8**	**37.9**	**41.7**
Beryllium	160	0.2 U	0.2 U	0.2 U	0.2 U	0.2 U	**0.2**	0.2 U	**0.4**	0.2 U	0.2 U	0.3 U
Cadmium	1.3	**0.2**	**0.5**	**0.2**	0.1 U	0.1 U	**0.2**	**0.3**	**0.9**	**0.2**	0.1 U	0.1 U
Chromium	1,480	**12.3**	**31.9**	**15.5**	**14.0**	**19.1**	**39.5**	**930**	**58**	**16.4**	**11.8**	**13.3**
Chromium VI	3.8	0.434 U	0.439 U	0.442 U	0.505 U	0.411 U	0.429 U	0.426 U	0.454 U	0.499 U	0.478 U	0.599 U
Copper	36	**34.5**	**299**	**25.3**	**17.5**	**17.5**	**43.5**	**780**	**118**	**43.3**	**18.6**	**17.9**
Lead	250	**47.1**	**46.1**	**17.4**	**4.2**	**2.7**	**39.6**	**31.3**	**287**	**40.6**	**2.2**	**2.0**
Mercury	1.5	**0.04**	**0.06**	**0.03**	**0.03**	0.02 U	**0.03**	0.02 U	**0.08**	**0.07**	0.03 U	0.03 U
Nickel	210	**13.4**	**13.9**	**12.7**	**10.1**	**25.5**	**67.4**	**4940**	**52.7**	**12.3**	**9.7**	**8.9**
Selenium	1.0	0.5 U	0.5 U	0.5 U	0.6 U	0.5 U	0.5 U	0.5 U	0.5 U	0.6 U	0.6 U	0.7 U
Silver	170	0.2 U	0.2 U	0.2 U	0.2 U	0.2 U	0.2 U	0.3	**0.3**	0.2 U	0.2 U	0.3 U
Thallium	0.67	0.2 U	0.2 U	0.2 U	0.2 U	0.2 U	0.2 U	0.2 U	0.2 U	0.2 U	0.2 U	0.3 U
Zinc	1,400	**72**	**144**	**66**	**30**	**38**	**66**	**39**	**780**	**77**	**30**	**27**
CONVENTIONALS (mg/kg)												
Cyanide	---											
Oil and Grease	---											

TABLE Q-4
SOIL ANALYTICAL DETECTS
FORMER SLIP 5 AREA
BOEING ISAACSON-THOMPSON
REMEDIAL INVESTIGATION

		FILL C: 1946-1960 Some Random Fill Along with Fill From Off-Site Sources				FILL D: 1960-1965 Slag, Construction, Demolition Debris, and Imported Soil						
	Preliminary Cleanup Levels	IT-SB-12(2-3.5) TX02K 11/14/2011	IT-SB-12(5-6.5) TX01J 11/14/2011	IT-SB-12(8-9.5) TX01K 11/14/2011	IT-SB-12(14-15.5) TX01L 11/14/2011	22 (4) 8/1/1983	22 (6.5) 8/1/1983	IT-PIVEXC1-B(4.2) TH64A 8/8/2011	IT-SB-5(2-3.5) TU65L 10/31/2011	IT-SB-5(5-6.5) TU65M 10/31/2011	IT-SB-5(8-9.5) TU65N 10/31/2011	IT-SB-5(16-17.5) TU65O 10/31/2011
VOLATILES (µg/kg)												
Method SW8260C												
Methylene Chloride	2,400	**1.3** J1	**2.0** J, J1	**2.2** J, J1	**2.1** J, J1			1.7 U	**2.0** J, J1	2.1 UJ	**3.4** J	**3.0** J
Acetone	510,000	**41** J	**27** J	**120** J	**12** J			47 U	**95**	5.4 UJ	**54**	17 U
Carbon Disulfide	75,000	**1.9**	**18**	**2.5**	**2.3**			**16**	**1.1**	**7.5** J	**2.4**	**5.4**
1,1-Dichloroethane	710	1.2 U	1.4 UJ	1.5 UJ	1.2 UJ			0.9 U	1.1 U	1.1 UJ	1.6 U	1.2 U
trans-1,2-Dichloroethene	19,000	1.2 UJ	1.4 U	1.5 U	1.2 U			0.9 U	1.1 U	1.1 UJ	1.6 U	1.2 U
cis-1,2-Dichloroethene	2,600	1.2 U	1.4 U	1.5 U	1.2 U			0.9 U	**0.6** J1	1.1 UJ	1.6 U	1.2 U
2-Butanone	430,000	**3.4** J1	6.8 U	**19**	6.0 U			4.3 U	**15**	5.4 UJ	7.8 U	5.9 U
Bromodichloromethane	89	1.2 U	1.4 U	1.5 U	1.2 U			0.9 U	1.1 U	1.1 UJ	1.6 U	1.2 U
Trichloroethene	51	**0.8** J1	**1.0** J1	**2.2**	**1.1** J1			0.9 U	1.1 U	1.1 UJ	1.6 U	1.2 U
Benzene	93	**1.2** J1	1.4 U	**1.1** J1	**0.7** J1			**0.4** J	**1.8**	1.1 UJ	**3.3**	1.2 U
trans-1,3-Dichloropropene	---	1.2 U	1.4 U	1.5 U	1.2 U			0.9 U	1.1 U	1.1 UJ	1.6 U	1.2 U
4-Methyl-2-Pentanone (MIBK)	170,000	6.1 U	6.8 U	7.4 U	6.0 U			4.3 U	5.3 U	5.4 UJ	7.8 U	5.9 U
Toluene	100,000	**0.8** J1	1.4 U	1.5 U	1.2 U			0.9 U	**1.0** J1	**9.1** J	**14**	1.2 U
Ethylbenzene	230	1.2 U	1.4 U	1.5 U	1.2 U			0.9 U	1.1 U	**21** J	**16**	1.2 U
Trichlorofluoromethane	200,000	1.2 U	1.4 U	1.5 U	1.2 U			0.9 U	1.1 U	1.1 UJ	1.6 U	1.2 U
1,1,2-Trichloro-1,2,2-trifuoroethane	1,000,000,000	2.5 U	2.7 U	3.0 U	2.4 U			1.7 U	2.1 U	2.1 UJ	3.1 U	2.4 U
m,p-Xylene	160,000	1.2 U	1.4 U	1.5 U	1.2 U			0.9 U	**0.6** J1	**240** J	**77**	**0.9** J1
o-Xylene	200,000	1.2 U	1.4 U	1.5 U	1.2 U			0.9 U	1.1 U	**37** J	**14**	1.2 U
1,2-Dichlorobenzene	68,000	1.2 U	1.4 U	1.5 U	1.2 U			0.9 U	1.1 U	1.1 UJ	1.6 U	1.2 U
Methyl Iodide	---	1.2 U	1.4 U	1.5 U	1.2 U			0.9 U	1.1 U	1.1 UJ	1.6 U	1.2 U
1,3,5-Trimethylbenzene	800,000	1.2 U	1.4 U	1.5 U	1.2 U			0.9 U	1.1 U	1.1 UJ	1.6 U	1.2 U
1,2,4-Trimethylbenzene	800,000	1.2 U	1.4 U	1.5 U	1.2 U			0.9 U	**0.6** J1	**30** J	**8.6**	1.2 U
Isopropylbenzene	78,000	1.2 U	1.4 U	1.5 U	1.2 U			0.9 U	1.1 U	**3.6** J	**0.9** J1	1.2 U
n-Propylbenzene	11,000	1.2 U	1.4 U	1.5 U	1.2 U			0.9 U	1.1 U	**3.3** J	**1.2** J1	1.2 U
tert-Butylbenzene	---	1.2 U	1.4 U	1.5 U	1.2 U			0.9 U	1.1 U	**6.9** J	**2.5**	1.2 U
sec-Butylbenzene	---	1.2 U	1.4 U	1.5 U	1.2 U			0.9 U	1.1 U	1.1 UJ	**1.6**	1.2 U
4-Isopropyltoluene	---	1.2 U	1.4 U	1.5 U	1.2 U			0.9 U	1.1 U	**2.3** J	**3.9**	1.2 U
n-Butylbenzene	27,000	1.2 U	1.4 U	1.5 U	1.2 U			0.9 U	1.1 U	**1.6** J	**2.0**	1.2 U
Naphthalene	2,100	6.1 U	6.8 U	7.4 U	6.0 U			4.3 U	**1.8** J1	**2.4** J, J1	**6.5** J1	5.9 U
1,2-Dichloroethene (total)	---											
Total Xylenes	200,000											
SEMIVOLATILES (µg/kg)												
Method SW8270D												
Phenol	1,900,000	19 U	19 U	17 U	**28**			19 U	19 U	19 U	18 U	18 U
1,3-Dichlorobenzene	3,840	19 U	19 U	17 U	18 U			19 U	19 U	19 U	18 U	18 U
1,4-Dichlorobenzene	3,500	19 U	19 U	17 U	18 U			19 U	19 U	19 U	**44**	**14** J1
Benzyl Alcohol	8,000,000	19 U	19 UJ	17 UJ	18 UJ			19 U	19 U	19 U	18 U	18 U
1,2-Dichlorobenzene	68,000	19 U	19 U	17 U	18 U			19 U	19 U	19 U	18 U	18 U
2-Methylphenol	250,000	19 U	19 U	17 U	18 U			19 U	19 U	19 U	18 U	18 U
4-Methylphenol	41,000	37 U	38 U	35 U	**25** J1			38 U	39 U	**15** J1	37 U	37 U
Isophorone	---	19 U	19 U	17 U	18 U			19 U	19 U	19 U	18 U	18 U
2,4-Dimethylphenol	95,000	37 U	38 U	35 U	36 U			38 U	39 U	38 U	37 U	37 U
Benzoic Acid	9,000	370 U	380 U	350 U	360 U			380 U	390 U	380 U	370 U	370 U
Naphthalene	2,100	**15** J1	19 U	17 U	**22**			19 U	**62**	**35**	**100**	18 U
2-Methylnaphthalene	320,000	**13** J1	19 U	17 U	18 U			19 U	**32**	**34**	**110**	18 U
Acenaphthylene	---	19 U	19 U	17 U	18 U			19 U	19 U	19 U	**62**	18 U
Acenaphthene	230,000	19 U	19 U	17 U	18 U			19 U	**27**	**12** J1	**390**	18 U
Dibenzofuran	80,000	19 U	19 U	17 U	18 U			19 U	**18** J1	**15** J1	**53**	18 U
Fluorene	150,000	19 U	19 U	17 U	18 U			19 U	**33**	**20**	**430**	18 U

TABLE Q-4
SOIL ANALYTICAL DETECTS
FORMER SLIP 5 AREA
BOEING ISAACSON-THOMPSON
REMEDIAL INVESTIGATION

	Preliminary Cleanup Levels	FILL C: 1946-1960 Some Random Fill Along with Fill From Off-Site Sources				FILL D: 1960-1965 Slag, Construction, Demolition Debris, and Imported Soil						
		IT-SB-12(2-3.5) TX02K 11/14/2011	IT-SB-12(5-6.5) TX01J 11/14/2011	IT-SB-12(8-9.5) TX01K 11/14/2011	IT-SB-12(14-15.5) TX01L 11/14/2011	22 (4) 8/1/1983	22 (6.5) 8/1/1983	IT-PIVEXC1-B(4.2) TH64A 8/8/2011	IT-SB-5(2-3.5) TU65L 10/31/2011	IT-SB-5(5-6.5) TU65M 10/31/2011	IT-SB-5(8-9.5) TU65N 10/31/2011	IT-SB-5(16-17.5) TU65O 10/31/2011
N-Nitrosodiphenylamine	204,000	19 U	19 U	17 U	18 U			19 U	19 U	19 U	18 U	18 U
Phenanthrene	---	**58**	**44**	**20**	**14** J1			**16** J	**250**	**120**	**3200**	**11** J1
Carbazole	50,000	19 U	19 U	17 U	18 U			19 U	**33**	19 U	**72**	18 U
Anthracene	1,600,000	**17** J1	19 U	17 U	18 U			19 U	**45**	**18** J1	**650**	18 U
Di-n-Butylphthalate	26,000	**34**	19 U	17 U	18 U			19 U	19 U	19 U	18 U	18 U
Fluoranthene	230,000	**120**	**70**	**17**	**11** J1			**13** J	**220**	**94**	**2600**	**9.2** J1
Pyrene	240,000	**200** J	**82**	**16** J1	**14** J1			**12** J	**240**	**120**	**3200**	18 U
Butylbenzylphthalate	1,700	19 U	19 U	17 U	18 U			19 U	19 U	19 U	18 U	18 U
Benzo(a)anthracene	---	**87**	**37**	17 U	18 U			19 U	**93**	**40**	**1300**	18 U
bis(2-Ethylhexyl)phthalate	56,600	46 U	**24**	**15** J1	**15** J1			**24**	17 UJ2	49 U	23 U	23 U
Chrysene	---	**120**	**50**	**10** J1	18 U			19 U	**140**	**79**	**1500**	**9.2** J1
Di-n-Octyl phthalate	---	19 U	19 U	17 U	18 U			19 U	19 U	19 U	18 U	18 U
Benzo(a)pyrene	---	**94**	**34**	17 U	18 U			19 U	**140**	**58**	**1200**	18 U
Indeno(1,2,3-cd)pyrene	---	**58**	19 U	17 U	18 U			19 U	**88**	**36**	**590**	18 U
Dibenz(a,h)anthracene	---	**19**	19 U	17 U	18 U			19 U	**49**	**18** J1	**230**	18 U
Benzo(g,h,i)perylene	---	**84**	**17** J1	17 U	18 U			19 U	**130**	**54**	**630**	18 U
1-Methylnaphthalene	16,000	**9.4** J1	19 U	17 U	18 U			**17** J	**22**	**16** J1	**61**	18 U
Total Benzofluoranthenes	---	**180**	**69**	**11** J1	18 U			12 J	**200**	**92**	**1800**	18 U
cPAH TEQ	15	**130**	**45**	**1** J	ND			ND	**184**	**77** J	**1607**	**0.1** J
PAHs (µg/kg)												
Method SW8270D-SIM												
Naphthalene	2,100	**18**	**9.8**	**7.7**	**31**			**3.7** J	**42**	**20**	**150**	**3.2** J1
2-Methylnaphthalene	320,000	**18**	**12**	**9.4**	4.6 U			**39**	**27**	**25**	**220**	**3.2** J1
1-Methylnaphthalene	16,000	**14**	**9.0**	**6.9**	4.6 U			**30**	**22**	**18**	**170**	**2.5** J1
Total Naphthalenes	---	**50**	**30.8**	**24**	**31**			**72.7** J	**91**	**63**	**540**	**8.9** J1
Acenaphthylene	---	**4.5** J1	**3.7** J1	4.6 U	**5.1**			4.7 U	**6.3** J1	**8.3** J1	**1100**	**4.2** J1
Acenaphthene	230,000	4.7 U	**7.1**	4.6 U	**2.6** J1			4.7 U	**45**	**24**	**580**	**3.7** J1
Fluorene	150,000	**3.1** J1	4.8 U	4.6 U	4.6 U			**4.2** J	**41**	**20**	**890**	**5.2**
Phenanthrene	---	**74**	**230**	**30**	**22**			**12**	**300**	**160**	**7800**	**23**
Anthracene	1,600,000	**17**	**58**	**2.8** J1	4.6 U			4.7 U	**62**	**24**	**1900**	**4.8**
Fluoranthene	230,000	**200**	**180**	**25**	**17**			**4.9**	**340**	**160**	**7900**	**24**
Pyrene	240,000	**230**	**120**	**20**	**16**			**5.4**	**320**	**160**	**11000**	**31**
Benzo(a)anthracene	---	**110**	**43**	**7.3**	**2.5** J1			**2.4** J	**150**	**66**	**5400**	**18**
Chrysene	---	**140**	**67**	**14**	**5.0**			**3.3** J	**170**	**100**	**6400**	**22.0**
Benzo(a)pyrene	---	**110**	**37**	**6.1**	4.6 U			**2.8** J	**110**	**72**	**6700**	**12**
Indeno(1,2,3-cd)pyrene	---	**75**	**21**	**3.8** J1	**4.6**			4.7 U	**94**	**44**	**2600**	**10**
Dibenz(a,h)anthracene	---	**26**	**7.5**	4.6 U	4.6 U			4.7 U	**32**	**20**	**1100**	**3.4** J1
Benzo(g,h,i)perylene	---	**89**	**24**	**5.5**	**8.4**			**2.6** J	**110**	**74**	**3200**	**12**
Dibenzofuran	80,000	**9.8**	**14**	**3.8** J1	**4.3** J1			**2.4** J	**24**	**10**	**170**	4.7 U
Total Benzofluoranthenes	---	**200**	**69**	**15**	**9.3**			**7**	**250**	**120**	**7200**	**26**
cPAH TEQ	15	**153**	**52**	**8.9** J	**1.7** J			**3.773**	**164**	**98**	**8394**	**18** J
PCBs (µg/kg)												
Method SW8082												
Aroclor 1242	0.72	32 U	32 U	31 U	32 U			33 U	31 U	32 U	32 U	32 U
Aroclor 1248	220	81 U	32 U	31 U	32 U			33 U	31 U	32 U	32 U	32 U
Aroclor 1254	0.29	**270**	32 U	31 U	32 U			33 U	**31**	32 U	32 U	32 U
Aroclor 1260	5.4	**160**	32 U	31 U	32 U			33 U	**51**	32 U	32 U	32 U
Total PCBs	1.8	**430**	ND	ND	ND	**50**		ND	**82**	ND	ND	ND

TABLE Q-4
SOIL ANALYTICAL DETECTS
FORMER SLIP 5 AREA
BOEING ISAACSON-THOMPSON
REMEDIAL INVESTIGATION

		FILL C: 1946-1960 Some Random Fill Along with Fill From Off-Site Sources				FILL D: 1960-1965 Slag, Construction, Demolition Debris, and Imported Soil						
	Preliminary Cleanup Levels	IT-SB-12(2-3.5) TX02K 11/14/2011	IT-SB-12(5-6.5) TX01J 11/14/2011	IT-SB-12(8-9.5) TX01K 11/14/2011	IT-SB-12(14-15.5) TX01L 11/14/2011	22 (4) 8/1/1983	22 (6.5) 8/1/1983	IT-PIVEXC1-B(4.2) TH64A 8/8/2011	IT-SB-5(2-3.5) TU65L 10/31/2011	IT-SB-5(5-6.5) TU65M 10/31/2011	IT-SB-5(8-9.5) TU65N 10/31/2011	IT-SB-5(16-17.5) TU65O 10/31/2011
TOTAL PETROLEUM HYDROCARBONS (mg/kg)												
NWTPH-HCID												
Diesel-Range Organics	---											
Gasoline-Range Organics	---											
Lube Oil	---											
NWTPH-Dx												
Diesel-Range Organics	2,000	**31** J	**26**	**12**	**10**			5.5 U	**86**	**140**	**130**	**16**
Oil-Range Organics	2,000	**62**	**38**	**14**	**17**			**12**	**210**	**340**	**220**	**14**
NWTPH-G												
Gasoline-Range Organics	100/30	5.7 U	8.2 U	9.6 U	7.2 U			5.5 U	**26**	**25**	**22**	6.6 U
C19 Branched Hydrocarbon	---											
C11 Hydrocarbon	---											
C18-C25 Hydrocarbons (total)	---											
TOTAL METALS (mg/kg)												
Methods 200.8/7471A/SW7196A												
Antimony	5	**0.3**	0.2 U	0.2 U	0.2 U			0.2 U	0.2 U	0.2 U	0.2 U	0.2 U
Barium	640	**257**	**206**	**130**	**47.3**	**50**	**60**	**44.4**	**89.7**	**69.0**	**70.4**	**17.7**
Beryllium	160	**0.2**	**0.8**	**0.4**	0.2 U			0.2 U	**0.3**	0.2 U	0.2 U	0.2 U
Cadmium	1.3	**2.2**	**2.4**	**2.7**	0.1 U	**0.57**	**1.3**	0.1 U	**0.3**	**1.0**	**0.9**	0.1 U
Chromium	1,480	**257**	**368**	**158**	**12.6**	**23**	**48**	**24**	**16.9**	**27.9**	**72.7**	**12.0**
Chromium VI	3.8	0.441 U	0.457 U	0.456 U	0.518 U			0.448 U	0.464 U	0.432 U	0.456 U	0.489 U
Copper	36	**66.7**	**61.3**	**47.1**	**21.8**			**30**	**45.2**	**44.8**	**61.1**	**9.5**
Lead	250	**261**	**222**	**219**	**35.5**	**13**	**110**	**4.7**	**52.1**	**76.7**	**82.0**	**3.2**
Mercury	1.5	**0.28**	**0.06**	**0.03**	0.03 U	**0.07**	**0.06**	0.03 U	**2.66**	**0.13**	**0.02**	0.03 U
Nickel	210	**23.7**	**30.6**	**21.8**	**12.0**	**27**	**26**	**37.7**	**18.6**	**22.1**	**19.8**	**8.5**
Selenium	1.0	0.6 U	0.5 U	0.6 U	0.6 U	**0.27**	**0.26**	0.5 U	0.6 U	0.5 U	0.6 U	0.6 U
Silver	170	0.3	**0.4**	**0.3**	0.2 U	**0.07**	0.3 U	0.2 U	0.2 U	0.2 U	0.2 U	0.2 U
Thallium	0.67	0.2 U	0.2 U	0.2 U	0.2 U			0.2 U	0.2 U	0.2 U	0.2 U	0.2 U
Zinc	1,400	**740**	**500**	**333**	**48**	**70.2**	**268**	**47**	**76**	**116**	**303**	**27**
CONVENTIONALS (mg/kg)												
Cyanide	---											
Oil and Grease	---					**165**	**1710**					

TABLE Q-4
SOIL ANALYTICAL DETECTS
FORMER SLIP 5 AREA
BOEING ISAACSON-THOMPSON
REMEDIAL INVESTIGATION

	Preliminary Cleanup Levels	FILL E: 1965-1966 Imported Construction-Quality Sand Fill Material													
		224 (2.5-3) 1/20/1988	224 (7.5-8) 1/20/1988	224 (12.5-13) 1/20/1988	224 (17.5-18) 1/20/1988	224 (18-18.5) 1/20/1988	230 (2.5-3) 1/21/1988	230 (7.5-8) 1/21/1988	230 (12.5-13) 1/21/1988	230 (15-15.5) 1/21/1988	233 (3.5-4) 1/21/1988	233 (8.5-9) 1/21/1988	233 (10-10.5) 1/28/1988	B-1 (10.5) 12/17/1993	B-2 (10.5) 12/17/1993
VOLATILES (µg/kg)															
Method SW8260C															
Methylene Chloride	2,400														
Acetone	510,000														
Carbon Disulfide	75,000														
1,1-Dichloroethane	710														
trans-1,2-Dichloroethene	19,000														
cis-1,2-Dichloroethene	2,600														
2-Butanone	430,000														
Bromodichloromethane	89														
Trichloroethene	51														
Benzene	93														
trans-1,3-Dichloropropene	---														
4-Methyl-2-Pentanone (MIBK)	170,000														
Toluene	100,000														
Ethylbenzene	230														
Trichlorofluoromethane	200,000														
1,1,2-Trichloro-1,2,2-trifuoroethane	1,000,000,000														
m,p-Xylene	160,000														
o-Xylene	200,000														
1,2-Dichlorobenzene	68,000														
Methyl Iodide	---														
1,3,5-Trimethylbenzene	800,000														
1,2,4-Trimethylbenzene	800,000														
Isopropylbenzene	78,000														
n-Propylbenzene	11,000														
tert-Butylbenzene	---														
sec-Butylbenzene	---														
4-Isopropyltoluene	---														
n-Butylbenzene	27,000														
Naphthalene	2,100														
1,2-Dichloroethene (total)	---														
Total Xylenes	200,000														
SEMIVOLATILES (µg/kg)															
Method SW8270D															
Phenol	1,900,000														
1,3-Dichlorobenzene	3,840														
1,4-Dichlorobenzene	3,500														
Benzyl Alcohol	8,000,000														
1,2-Dichlorobenzene	68,000														
2-Methylphenol	250,000														
4-Methylphenol	41,000														
Isophorone	---														
2,4-Dimethylphenol	95,000														
Benzoic Acid	9,000														
Naphthalene	2,100														
2-Methylnaphthalene	320,000														
Acenaphthylene	---														
Acenaphthene	230,000														
Dibenzofuran	80,000														
Fluorene	150,000														

TABLE Q-4
SOIL ANALYTICAL DETECTS
FORMER SLIP 5 AREA
BOEING ISAACSON-THOMPSON
REMEDIAL INVESTIGATION

	Preliminary Cleanup Levels	FILL E: 1965-1966 Imported Construction-Quality Sand Fill Material													
		224 (2.5-3)	224 (7.5-8)	224 (12.5-13)	224 (17.5-18)	224 (18-18.5)	230 (2.5-3)	230 (7.5-8)	230 (12.5-13)	230 (15-15.5)	233 (3.5-4)	233 (8.5-9)	233 (10-10.5)	B-1 (10.5)	B-2 (10.5)
		1/20/1988	1/20/1988	1/20/1988	1/20/1988	1/20/1988	1/21/1988	1/21/1988	1/21/1988	1/21/1988	1/21/1988	1/21/1988	1/28/1988	12/17/1993	12/17/1993
N-Nitrosodiphenylamine	204,000														
Phenanthrene	---														
Carbazole	50,000														
Anthracene	1,600,000														
Di-n-Butylphthalate	26,000														
Fluoranthene	230,000														
Pyrene	240,000														
Butylbenzylphthalate	1,700														
Benzo(a)anthracene	---														
bis(2-Ethylhexyl)phthalate	56,600														
Chrysene	---														
Di-n-Octyl phthalate	---														
Benzo(a)pyrene	---														
Indeno(1,2,3-cd)pyrene	---														
Dibenz(a,h)anthracene	---														
Benzo(g,h,i)perylene	---														
1-Methylnaphthalene	16,000														
Total Benzofluoranthenes	---														
cPAH TEQ	15														
PAHs (µg/kg)															
Method SW8270D-SIM															
Naphthalene	2,100														
2-Methylnaphthalene	320,000														
1-Methylnaphthalene	16,000														
Total Naphthalenes	---														
Acenaphthylene	---														
Acenaphthene	230,000														
Fluorene	150,000														
Phenanthrene	---														
Anthracene	1,600,000														
Fluoranthene	230,000														
Pyrene	240,000														
Benzo(a)anthracene	---														
Chrysene	---														
Benzo(a)pyrene	---														
Indeno(1,2,3-cd)pyrene	---														
Dibenz(a,h)anthracene	---														
Benzo(g,h,i)perylene	---														
Dibenzofuran	80,000														
Total Benzofluoranthenes	---														
cPAH TEQ	15														
PCBs (µg/kg)															
Method SW8082															
Aroclor 1242	0.72														
Aroclor 1248	220														
Aroclor 1254	0.29														
Aroclor 1260	5.4														
Total PCBs	1.8														

TABLE Q-4
SOIL ANALYTICAL DETECTS
FORMER SLIP 5 AREA
BOEING ISAACSON-THOMPSON
REMEDIAL INVESTIGATION

		FILL E: 1965-1966 Imported Construction-Quality Sand Fill Material													
	Preliminary Cleanup Levels	224 (2.5-3) 1/20/1988	224 (7.5-8) 1/20/1988	224 (12.5-13) 1/20/1988	224 (17.5-18) 1/20/1988	224 (18-18.5) 1/20/1988	230 (2.5-3) 1/21/1988	230 (7.5-8) 1/21/1988	230 (12.5-13) 1/21/1988	230 (15-15.5) 1/21/1988	233 (3.5-4) 1/21/1988	233 (8.5-9) 1/21/1988	233 (10-10.5) 1/28/1988	B-1 (10.5) 12/17/1993	B-2 (10.5) 12/17/1993
TOTAL PETROLEUM HYDROCARBONS (mg/kg)															
NWTPH-HCID															
Diesel-Range Organics	---													25 U	**91**
Gasoline-Range Organics	---													20 U	20 U
Lube Oil	---													50 U	**62**
NWTPH-Dx															
Diesel-Range Organics	2,000														
Oil-Range Organics	2,000														
NWTPH-G															
Gasoline-Range Organics	100/30														
C19 Branched Hydrocarbon	---														
C11 Hydrocarbon	---														
C18-C25 Hydrocarbons (total)	---														
TOTAL METALS (mg/kg)															
Methods 200.8/7471A/SW7196A															
Antimony	5														
Barium	640														
Beryllium	160														
Cadmium	1.3									**0.6**		**0.4**			
Chromium	1,480	**27**	**39**	**757**	**120**	**9**	**33**	**32**	**81**	**1490**	**37**	**1750**	**591**		
Chromium VI	3.8														
Copper	36	**22**	**38**	**1500**	**113**	**17**	**14**	**11**	**227**	**108**	**11**	**846**	**591**		
Lead	250	**8**	**34**	**370**	**149**	4 U	4 U	4 U	**239**	**274**	4 U	**1110**	**55**		
Mercury	1.5									0.01 U		0.01 U			
Nickel	210	**24**	**28**	**1624**	**350**	**13**	**34**	**38**	**125**	**470**	**42**	**1427**	**2460**		
Selenium	1.0														
Silver	170									**1**		**0.5**			
Thallium	0.67														
Zinc	1,400	**46.1**	**161**	**332**	**605**	**25.9**	**34.2**	**31.3**	**672**	**154**	**32.2**	**351**	**42.6**		
CONVENTIONALS (mg/kg)															
Cyanide	---									0.5 U		1 U			
Oil and Grease	---														

TABLE Q-4
SOIL ANALYTICAL DETECTS
FORMER SLIP 5 AREA
BOEING ISAACSON-THOMPSON
REMEDIAL INVESTIGATION

	Preliminary Cleanup Levels	FILL E: 1965-1966 Imported Construction-Quality Sand Fill Material												
		B-3 (8) 12/17/1993	B-8 (3) 7/6/1994	B-8 (5.5) 7/6/1994	B-8 (8) 7/6/1994	B-8 (10.5) 7/6/1994	B-8 (13) 7/6/1994	B-8 (15.5) 7/6/1994	B-20 (4) 1983	B-20 (10.5) 1983	B-20 (14) 1983	TDP22 (3) NY44G 11/5/2008	TDP23 (3) NY44H 11/5/2008	TDP32 (11) NY64G 11/6/2008
VOLATILES (µg/kg)														
Method SW8260C														
Methylene Chloride	2,400													1.7 U
Acetone	510,000													**15**
Carbon Disulfide	75,000													**0.9**
1,1-Dichloroethane	710													0.7 U
trans-1,2-Dichloroethene	19,000													0.7 U
cis-1,2-Dichloroethene	2,600													0.7 U
2-Butanone	430,000													3.4 U
Bromodichloromethane	89													0.7 U
Trichloroethene	51													0.7 U
Benzene	93													0.7 U
trans-1,3-Dichloropropene	---													0.7 U
4-Methyl-2-Pentanone (MIBK)	170,000													3.4 U
Toluene	100,000													0.7 U
Ethylbenzene	230													0.7 U
Trichlorofluoromethane	200,000													0.7 U
1,1,2-Trichloro-1,2,2-trifuoroethane	1,000,000,000													1.4 U
m,p-Xylene	160,000													0.7 U
o-Xylene	200,000													0.7 U
1,2-Dichlorobenzene	68,000													
Methyl Iodide	---													
1,3,5-Trimethylbenzene	800,000													
1,2,4-Trimethylbenzene	800,000													
Isopropylbenzene	78,000													
n-Propylbenzene	11,000													
tert-Butylbenzene	---													
sec-Butylbenzene	---													
4-Isopropyltoluene	---													
n-Butylbenzene	27,000													
Naphthalene	2,100													
1,2-Dichloroethene (total)	---													
Total Xylenes	200,000													
SEMIVOLATILES (µg/kg)														
Method SW8270D														
Phenol	1,900,000													
1,3-Dichlorobenzene	3,840													
1,4-Dichlorobenzene	3,500													
Benzyl Alcohol	8,000,000													
1,2-Dichlorobenzene	68,000													
2-Methylphenol	250,000													
4-Methylphenol	41,000													
Isophorone	---													
2,4-Dimethylphenol	95,000													
Benzoic Acid	9,000													
Naphthalene	2,100													
2-Methylnaphthalene	320,000													
Acenaphthylene	---													
Acenaphthene	230,000													
Dibenzofuran	80,000													
Fluorene	150,000													

TABLE Q-4
SOIL ANALYTICAL DETECTS
FORMER SLIP 5 AREA
BOEING ISAACSON-THOMPSON
REMEDIAL INVESTIGATION

	Preliminary Cleanup Levels	FILL E: 1965-1966 Imported Construction-Quality Sand Fill Material												
		B-3 (8) 12/17/1993	B-8 (3) 7/6/1994	B-8 (5.5) 7/6/1994	B-8 (8) 7/6/1994	B-8 (10.5) 7/6/1994	B-8 (13) 7/6/1994	B-8 (15.5) 7/6/1994	B-20 (4) 1983	B-20 (10.5) 1983	B-20 (14) 1983	TDP22 (3) NY44G 11/5/2008	TDP23 (3) NY44H 11/5/2008	TDP32 (11) NY64G 11/6/2008
N-Nitrosodiphenylamine	204,000													
Phenanthrene	---													
Carbazole	50,000													
Anthracene	1,600,000													
Di-n-Butylphthalate	26,000													
Fluoranthene	230,000													
Pyrene	240,000													
Butylbenzylphthalate	1,700													
Benzo(a)anthracene	---													
bis(2-Ethylhexyl)phthalate	56,600													
Chrysene	---													
Di-n-Octyl phthalate	---													
Benzo(a)pyrene	---													
Indeno(1,2,3-cd)pyrene	---													
Dibenz(a,h)anthracene	---													
Benzo(g,h,i)perylene	---													
1-Methylnaphthalene	16,000													
Total Benzofluoranthenes	---													
cPAH TEQ	15													
PAHs (µg/kg)														
Method SW8270D-SIM														
Naphthalene	2,100													
2-Methylnaphthalene	320,000													
1-Methylnaphthalene	16,000													
Total Naphthalenes	---													
Acenaphthylene	---													
Acenaphthene	230,000													
Fluorene	150,000													
Phenanthrene	---													
Anthracene	1,600,000													
Fluoranthene	230,000													
Pyrene	240,000													
Benzo(a)anthracene	---													
Chrysene	---													
Benzo(a)pyrene	---													
Indeno(1,2,3-cd)pyrene	---													
Dibenz(a,h)anthracene	---													
Benzo(g,h,i)perylene	---													
Dibenzofuran	80,000													
Total Benzofluoranthenes	---													
cPAH TEQ	15													
PCBs (µg/kg)														
Method SW8082														
Aroclor 1242	0.72											31 U	31 U	
Aroclor 1248	220											31 U	31 U	
Aroclor 1254	0.29											31 U	31 U	
Aroclor 1260	5.4											31 U	31 U	
Total PCBs	1.8								100 U			ND	ND	

TABLE Q-4
SOIL ANALYTICAL DETECTS
FORMER SLIP 5 AREA
BOEING ISAACSON-THOMPSON
REMEDIAL INVESTIGATION

		FILL E: 1965-1966 Imported Construction-Quality Sand Fill Material												
	Preliminary Cleanup Levels	B-3 (8) 12/17/1993	B-8 (3) 7/6/1994	B-8 (5.5) 7/6/1994	B-8 (8) 7/6/1994	B-8 (10.5) 7/6/1994	B-8 (13) 7/6/1994	B-8 (15.5) 7/6/1994	B-20 (4) 1983	B-20 (10.5) 1983	B-20 (14) 1983	TDP22 (3) NY44G 11/5/2008	TDP23 (3) NY44H 11/5/2008	TDP32 (11) NY64G 11/6/2008
TOTAL PETROLEUM HYDROCARBONS (mg/kg)														
NWTPH-HCID														
Diesel-Range Organics	---	25 U										50 U	50 U	50 U
Gasoline-Range Organics	---	20 U	**120**	**230**	**140**	**110**	**52**	**25**				20 U	20 U	20 U
Lube Oil	---	50 U										100 U	100 U	100 U
NWTPH-Dx														
Diesel-Range Organics	2,000													
Oil-Range Organics	2,000													
NWTPH-G														
Gasoline-Range Organics	100/30													
C19 Branched Hydrocarbon	---													
C11 Hydrocarbon	---													
C18-C25 Hydrocarbons (total)	---													
TOTAL METALS (mg/kg)														
Methods 200.8/7471A/SW7196A														
Antimony	5													
Barium	640								**28**	**49**	**71**			
Beryllium	160													
Cadmium	1.3								**0.40**	**0.45**	**0.68**	0.2 U	0.2 U	0.2 U
Chromium	1,480								**19**	**15**	**19**	**24**	**24.6**	**29.4**
Chromium VI	3.8													
Copper	36											**15.6**	**17.7**	**20.5**
Lead	250								**8**	**9**	**93**	**4**	**11**	2 U
Mercury	1.5								0.03 U	0.03 U	**4.3**	0.04 U	**0.11**	0.05 U
Nickel	210								**28**	**19**	**15**			
Selenium	1.0								**0.40**	**0.75**	**0.31**			
Silver	170								0.30 U	0.30 U	0.30 U			
Thallium	0.67													
Zinc	1,400								**26.8**	**30.7**	**52.9**			
CONVENTIONALS (mg/kg)														
Cyanide	---													
Oil and Grease	---								**73**	**179**	**149**			

TABLE Q-4
SOIL ANALYTICAL DETECTS
FORMER SLIP 5 AREA
BOEING ISAACSON-THOMPSON
REMEDIAL INVESTIGATION

	Preliminary Cleanup Levels	FILL E: 1965-1966 Imported Construction-Quality Sand Fill Material													
		IT-SB-2(2-3.5) TU65H 10/31/2011	IT-SB-2(5-6.5) TU65I 10/31/2011	IT-SB-2(8-9.5) TU65J 10/31/2011	IT-SB-2(14-15.5) TU65K 10/31/2011	IT-MW-12(2-3.5) TV61A 11/03/2011	IT-MW-12(5-6.5) TV61K 11/03/2011	IT-MW-12(8-9.5) TV61B 11/03/2011	IT-MW-12(13-14.5) TV61C 11/03/2011	IT-MW-12(18-19.5) TV61D 11/03/2011	IT-MW-12(23-24.5) TV61E 11/03/2011	IT-MW-13(2-3.5) TV61F 11/03/2011	IT-MW-13(5-6.5) TV61G 11/03/2011	IT-MW-13(8-9.5) TV61H 11/03/2011	IT-MW-13(12.5-14) TV61I 11/03/2011
VOLATILES (µg/kg)															
Method SW8260C															
Methylene Chloride	2,400	**2.6** J	**2.9** J	**3.0** J	**2.4** J	**2.7**	**1.9** J1	**3.0**	**5.5**	**3.1**	**2.4** J1	**4.6**	**1.9** J1	**2** J1	**2.3** J1
Acetone	510,000	29 U	**60**	29 U	21 U	**26**	**6.1**	**18**	**13**	**28**	**27**	**37**	**43**	**33**	**78**
Carbon Disulfide	75,000	1.1 U	**23**	1.2 U	**1.0** J1	1.2 U	1.2 U	1.1 U	**1.4**	**7**	**6.1**	**4.1**	**3.9**	**3.8**	**2**
1,1-Dichloroethane	710	1.1 U	1.0 U	1.2 U	1.1 U	1.2 U	1.2 U	1.1 U	1.3 U	1.3 U	1.2 U	1.4 U	1.1 U	1.1 U	1.3 U
trans-1,2-Dichloroethene	19,000	1.1 U	1.0 U	1.2 U	1.1 U	1.2 U	1.2 U	1.1 U	1.3 U	1.3 U	1.2 U	1.4 U	1.1 U	1.1 U	1.3 U
cis-1,2-Dichloroethene	2,600	1.1 U	1.0 U	1.2 U	1.1 U	1.2 U	1.2 U	1.1 U	1.3 U	1.3 U	1.2 U	1.4 U	1.1 U	1.1 U	1.3 U
2-Butanone	430,000	5.3 U	**9.7**	6.1 U	5.3 U	5.8 U	5.9 U	5.3 U	6.6 U	6.3 U	6.2 U	**3.7** J1	**6.3**	**3.7** J1	**11**
Bromodichloromethane	89	1.1 U	1.0 U	1.2 U	1.1 U	1.2 U	1.2 U	1.1 U	1.3 U	1.3 U	1.2 U	1.4 U	1.1 U	1.1 U	1.3 U
Trichloroethene	51	1.1 U	1.0 U	1.2 U	1.1 U	1.2 U	1.2 U	1.1 U	1.3 U	1.3 U	1.2 U	1.4 U	1.1 U	1.1 U	1.3 U
Benzene	93	1.1 U	**0.7** J1	1.2 U	1.1 U	1.2 U	1.2 U	1.1 U	1.3 U	**0.9** J1	1.2 U	1.4 U	**0.7** J1	**1.6**	**6.2**
trans-1,3-Dichloropropene	---	1.1 U	1.0 U	1.2 U	1.1 U	1.2 U	1.2 U	1.1 U	1.3 U	1.3 U	1.2 U	1.4 U	1.1 U	1.1 U	1.3 U
4-Methyl-2-Pentanone (MIBK)	170,000	5.3 U	4.9 U	6.1 U	5.3 U	5.8 U	5.9 U	5.3 U	6.6 U	6.3 U	6.2 U	6.8 U	5.4 U	5.3 U	6.7 U
Toluene	100,000	1.1 U	**11**	1.2 U	1.1 U	1.2 U	1.2 U	1.1 U	1.3 U	1.3 U	1.2 U	1.4 U	**0.7** J1	**1.6**	**3.4**
Ethylbenzene	230	1.1 U	**0.5** J1	1.2 U	1.1 U	1.2 U	1.2 U	1.1 U	1.3 U	1.3 U	1.2 U	1.4 U	**0.8** J1	**6.2**	**1.8**
Trichlorofluoromethane	200,000	1.1 U	1.0 U	1.2 U	1.1 U	1.2 U	1.2 U	1.1 U	1.3 U	1.3 U	1.2 U	1.4 U	1.1 U	1.1 U	1.3 U
1,1,2-Trichloro-1,2,2-trifuoroethane	1,000,000,000	2.1 U	2.0 U	2.4 U	2.1 U	2.3 U	2.4 U	2.1 U	2.6 U	2.5 U	2.5 U	2.7 U	2.1 U	2.1 U	2.7 U
m,p-Xylene	160,000	1.1 U	**2.1**	1.2 U	1.1 U	1.2 U	1.2 U	1.1 U	1.3 U	1.3 U	1.2 U	**7.4**	**0.6** J1	**17**	**5.9**
o-Xylene	200,000	1.1 U	**1.0** J1	1.2 U	1.1 U	1.2 U	1.2 U	1.1 U	1.3 U	1.3 U	1.2 U	**7.3**	1.1 U	**3.4**	**3.4**
1,2-Dichlorobenzene	68,000	1.1 U	1.0 U	1.2 U	1.1 U	1.2 U	1.2 U	1.1 U	1.3 U	1.3 U	1.2 U	1.4 U	1.1 U	1.1 U	1.3 U
Methyl Iodide	---	1.1 U	1.0 U	1.2 U	1.1 U	1.2 U	1.2 U	1.1 U	1.3 U	**0.8** J1	1.2 U	1.4 U	1.1 U	1.1 U	1.3 U
1,3,5-Trimethylbenzene	800,000	1.1 U	1.0 U	1.2 U	1.1 U	1.2 U	1.2 U	1.1 U	1.3 U	1.3 U	1.2 U	**14**	1.1 U	**4.9**	**5.4**
1,2,4-Trimethylbenzene	800,000	1.1 U	1.0 U	1.2 U	1.1 U	1.2 U	1.2 U	1.1 U	1.3 U	1.3 U	1.2 U	**16**	1.1 U	**9.1**	**13**
Isopropylbenzene	78,000	1.1 U	1.0 U	1.2 U	1.1 U	1.2 U	1.2 U	1.1 U	1.3 U	1.3 U	1.2 U	1.4 U	**0.9** J1	**1.7**	**0.8** J1
n-Propylbenzene	11,000	1.1 U	1.0 U	1.2 U	1.1 U	1.2 U	1.2 U	1.1 U	1.3 U	1.3 U	1.2 U	1.4 U	**0.6** J1	**3.1**	**1.0** J1
tert-Butylbenzene	---	1.1 U	1.0 U	1.2 U	1.1 U	1.2 U	1.2 U	1.1 U	1.3 U	1.3 U	1.2 U	1.4 U	1.1 U	1.1 U	1.3 U
sec-Butylbenzene	---	1.1 U	1.0 U	1.2 U	1.1 U	1.2 U	1.2 U	1.1 U	1.3 U	1.3 U	1.2 U	1.4 U	1.1 U	1.1 U	**0.7** J1
4-Isopropyltoluene	---	1.1 U	1.0 U	1.2 U	1.1 U	1.2 U	1.2 U	1.1 U	1.3 U	1.3 U	1.2 U	**1.6** J	1.1 U	**0.7** J, J1	1.8 J
n-Butylbenzene	27,000	1.1 U	1.0 U	1.2 U	1.1 U	1.2 U	1.2 U	1.1 U	1.3 U	1.3 U	1.2 U	1.4 U	1.1 U	1.1 U	1.3 U
Naphthalene	2,100	5.3 U	4.9 U	6.1 U	5.3 U	5.8 U	5.9 U	5.3 U	6.6 U	6.3 U	6.2 U	6.8 U	5.4 U	**1.1** J, J1	**7.3** J
1,2-Dichloroethene (total)	---														
Total Xylenes	200,000														
SEMIVOLATILES (µg/kg)															
Method SW8270D															
Phenol	1,900,000	18 U	18 U	18 U	19 U	19 U	19 U	19 U	19 U	**35**	19 U	19 U	19 U	18 U	19 UJ
1,3-Dichlorobenzene	3,840	18 U	18 U	18 U	19 U	19 U	19 U	19 U	19 U	20 U	19 U	19 U	19 U	18 U	**22**
1,4-Dichlorobenzene	3,500	18 U	18 U	18 U	19 U	19 U	19 U	19 U	19 U	20 U	19 U	19 U	19 U	18 U	**12** J1
Benzyl Alcohol	8,000,000	18 U	18 U	18 U	19 U	19 U	19 U	19 U	19 U	**41**	19 U	19 U	19 U	18 U	19 U
1,2-Dichlorobenzene	68,000	18 U	18 U	18 U	19 U	19 U	19 U	19 U	19 U	20 U	19 U	19 U	19 U	18 U	**22**
2-Methylphenol	250,000	18 U	18 U	18 U	19 U	19 U	19 U	19 U	19 U	20 U	19 U	19 U	19 U	18 U	19 UJ
4-Methylphenol	41,000	36 U	36 U	35 U	38 U	38 U	37 U	37 U	37 U	**28** J1	**23** J1	38 U	38 U	37 U	**18** J, J1
Isophorone	---	18 U	18 U	18 U	19 U	19 U	19 U	19 U	19 U	20 U	19 U	19 U	19 U	18 U	19 U
2,4-Dimethylphenol	95,000	36 U	36 U	35 U	38 U	38 UJ	37 UJ	37 UJ	37 UJ	**20** J, J1	38 UJ	38 UJ	38 UJ	37 UJ	38 UJ
Benzoic Acid	9,000	360 U	360 U	350 U	380 U	380 U	370 U	370 U	370 U	390 U	380 U	380 U	380 U	370 U	380 UJ
Naphthalene	2,100	**11** J1	**21**	18 U	19 U	19 U	19 U	19 U	19 U	**54**	**58**	**41**	**12** J1	**33**	**130**
2-Methylnaphthalene	320,000	18 U	**19**	18 U	19 U	19 U	19 U	19 U	19 U	**54**	**26**	**41**	19 U	**23**	**120**
Acenaphthylene	---	18 U	18 U	18 U	19 U	19 U	19 U	19 U	19 U	20 U	**13** J1	19 U	19 U	18 U	**14** J1
Acenaphthene	230,000	**21**	**36**	18 U	19 U	19 U	19 U	19 U	19 U	**16** J1	**12** J1	**35**	19 U	**9.2** J1	**33**
Dibenzofuran	80,000	**11** J1	**22**	18 U	19 U	19 U	19 U	19 U	19 U	**22**	**9.4** J1	**40**	19 U	**12** J1	**28**
Fluorene	150,000	**14** J1	**29**	18 U	19 U	19 U	19 U	19 U	19 U	**33** J	**15** J, J1	**78** J	19 U	**14** J, J1	**21** J

TABLE Q-4
SOIL ANALYTICAL DETECTS
FORMER SLIP 5 AREA
BOEING ISAACSON-THOMPSON
REMEDIAL INVESTIGATION

	Preliminary Cleanup Levels	FILL E: 1965-1966 Imported Construction-Quality Sand Fill Material													
		IT-SB-2(2-3.5) TU65H 10/31/2011	IT-SB-2(5-6.5) TU65I 10/31/2011	IT-SB-2(8-9.5) TU65J 10/31/2011	IT-SB-2(14-15.5) TU65K 10/31/2011	IT-MW-12(2-3.5) TV61A 11/03/2011	IT-MW-12(5-6.5) TV61K 11/03/2011	IT-MW-12(8-9.5) TV61B 11/03/2011	IT-MW-12(13-14.5) TV61C 11/03/2011	IT-MW-12(18-19.5) TV61D 11/03/2011	IT-MW-12(23-24.5) TV61E 11/03/2011	IT-MW-13(2-3.5) TV61F 11/03/2011	IT-MW-13(5-6.5) TV61G 11/03/2011	IT-MW-13(8-9.5) TV61H 11/03/2011	IT-MW-13(12.5-14) TV61I 11/03/2011
N-Nitrosodiphenylamine	204,000	18 U	18 U	18 U	19 U	19 U	19 U	19 U	19 U	20 U	19 U	19 U	19 U	18 U	25
Phenanthrene	---	12 J1	67	18 U	19 U	19 U	19 U	19 U	19 U	140	55	240	13 J1	59	370
Carbazole	50,000	18 U	18 U	18 U	19 U	19 UJ	19 UJ	19 UJ	19 UJ	20 UJ	19 UJ	34 J	19 UJ	18 UJ	42 J
Anthracene	1,600,000	18 U	8.9 J1	18 U	19 U	19 U	19 U	19 U	19 U	24	11 J1	45	19 U	18 U	58
Di-n-Butylphthalate	26,000	18 U	18 U	18 U	19 U	19 U	19 U	19 U	19 U	18 J1	19 U	19 U	19 U	18 U	19 U
Fluoranthene	230,000	18 U	40	18 U	19 U	19 U	19 U	19 U	19 U	120	59	140	16 J1	39	450
Pyrene	240,000	18 U	38	18 U	19 U	19 U	19 U	19 U	19 U	140	80	120	14 J1	41	420
Butylbenzylphthalate	1,700	18 U	21 M	18 U	19 U	19 U	19 U	19 U	19 U	20 U	19 U	19 U	19 U	18 U	19 U
Benzo(a)anthracene	---	18 U	15 J1	18 U	19 U	19 U	19 U	19 U	19 U	52	19	52	19 U	17 J1	230
bis(2-Ethylhexyl)phthalate	56,600	33 U	38 U	22 U	23 U	26 U	23 U	27 U	23 U	39 U	26 U	47 U	30 U	85 U	36 U
Chrysene	---	18 U	50	18 U	19 U	19 U	9.3 J1	19 U	19 U	82	23	83	9.4 J1	26	300
Di-n-Octyl phthalate	---	18 U	12 J1	18 U	19 U	19 U	19 U	19 U	19 U	20 U	19 U	19 U	19 U	18 U	19 U
Benzo(a)pyrene	---	18 U	18 U	18 U	19 U	19 U	19 U	19 U	19 U	46	19 U	53	19 U	15 J1	160
Indeno(1,2,3-cd)pyrene	---	18 U	18 U	18 U	19 U	19 U	19 U	19 U	19 U	26	19 U	24	19 U	18 U	69
Dibenz(a,h)anthracene	---	18 U	18 U	18 U	19 U	19 U	19 U	19 U	19 U	20 U	19 U	19 U	19 U	18 U	27
Benzo(g,h,i)perylene	---	18 U	18 U	18 U	19 U	19 U	19 U	19 U	19 U	36	19 U	19 U	19 U	18 U	85
1-Methylnaphthalene	16,000	18 U	14 J1	18 U	19 U	19 U	19 U	19 U	19 U	30	12 J1	35	19 U	12 J1	77
Total Benzofluoranthenes	---	18 U	22	18 U	19 U	19 U	19 U	19 U	19 U	80	29	80	19 U	26	290
cPAH TEQ	15	ND	4.2 J	ND	ND	ND	0.093 J	ND	ND	63	5	69	0.094 J	20 J	225
PAHs (µg/kg)															
Method SW8270D-SIM															
Naphthalene	2,100	11	9.8	4.9 U	4.7 U	4.8 U	4.6 U	2.7 J1	4.7 U	55	54	42	11	33	96
2-Methylnaphthalene	320,000	12	11	4.9 U	2.5 J1	2.6 J1	4.6 U	3.4 J1	4.7 U	51	4.6 U	44	5.7	27	110
1-Methylnaphthalene	16,000	6.8	9.9	4.9 U	4.7 U	4.8 U	4.6 U	2.3 J1	4.7 U	35	4.6 U	39	4 J1	16	92
Total Naphthalenes	---	29.8	30.7	4.9 U	2.5 J1	2.6 J1	4.6 U	8.4 J1	4.7 U	141	54	125	20.7 J1	76	298
Acenaphthylene	---	4.6 U	8.9 U	4.9 U	4.7 U	4.8 U	4.6 U	4.6 U	4.7 U	4.9 U	4.6 U	9.1 U	4.6 U	4.7 U	9.7 U
Acenaphthene	230,000	25	24	4.9 U	2.5 J1	4.8 U	4.6 U	4.6 U	4.7 U	42	14	58	4.6 U	20	91
Fluorene	150,000	18	17	4.9 U	4.7 U	4.8 U	4.6 U	4.6 U	4.7 U	26	14	89	3.1 J1	17	30
Phenanthrene	---	20	39	4.9 U	5.1	3.3 J1	3.4 J1	4.8	4.7 U	130	48	380	13	80	300
Anthracene	1,600,000	3 J1	5.5 J1	4.9 U	4.7 U	4.8 U	4.6 U	4.6 U	4.7 U	23	12	100	4.6 U	15	43
Fluoranthene	230,000	18	31	4.9 U	3.6 J1	4.8 U	4.6 U	4.6 U	4.7 U	120	65	240	15	68	190
Pyrene	240,000	13	24	4.9 U	4.1 J1	4.8 U	4.6 U	2.7 J1	4.7 U	110	56	170	12	62	240
Benzo(a)anthracene	---	2.3 J1	13	4.9 U	4.7 U	4.8 U	4.6 U	4.6 U	4.7 U	42	13	24	4.4 J1	23	110
Chrysene	---	3.2 J1	47.0	4.9 U	7.6	3.7 J1	2.7 J1	7.0	4.7 U	67	18.0	44	9	36	170
Benzo(a)pyrene	---	4.6 U	8.9	4.9 U	4.3 J1	4.8 U	4.6 U	4.6 U	4.7 U	34	16	13	6.5	25	110
Indeno(1,2,3-cd)pyrene	---	4.6 U	8.9 U	4.9 U	4.7 U	4.8 U	4.6 U	4.6 U	4.7 U	19	6.9	9.1 U	4.6 U	11	26
Dibenz(a,h)anthracene	---	4.6 U	8.9 U	4.9 U	4.7 U	4.8 U	4.6 U	4.6 U	4.7 U	8	4.6 U	9.1 U	4.6 U	4.3 J1	15
Benzo(g,h,i)perylene	---	4.6 U	14	4.9 U	4.7 U	3.4 J1	4.6 U	4.6 U	4.7 U	27	9.3	14	5.4	13	42
Dibenzofuran	80,000	14	13	4.9 U	4.7 U	4.8 U	4.6 U	4.6 U	4.7 U	22	12	52	3.5 J1	14	30
Total Benzofluoranthenes	---	4.6 U	21	4.9 U	4.7 U	4.8 U	4.6 U	4.6 U	4.7 U	64	31	39	14	37	95
cPAH TEQ	15	0.3 J	12.8	ND	4.4 J	0.04 J	0.03 J	0.1	ND	48	21.3	19.74	8.43 J	32.89 J	136.3
PCBs (µg/kg)															
Method SW8082															
Aroclor 1242	0.72	31 U	31 U	31 U	33 U	31 U	32 U	32 U	32 U	32 U	33 U	32 U	32 U	33 U	32 U
Aroclor 1248	220	31 U	31 U	31 U	33 U	31 U	32 U	32 U	32 U	96 U	33 U	32 U	32 U	33 U	32 U
Aroclor 1254	0.29	31 U	31 U	31 U	33 U	31 U	32 U	32 U	32 U	210	40	32 U	32 U	33 U	32 U
Aroclor 1260	5.4	31 U	31 U	31 U	33 U	31 U	32 U	32 U	32 U	82	33 U	32 U	32 U	33 U	32 U
Total PCBs	1.8	ND	ND	ND	ND	ND	ND	ND	ND	292	40	ND	ND	ND	ND

TABLE Q-4
SOIL ANALYTICAL DETECTS
FORMER SLIP 5 AREA
BOEING ISAACSON-THOMPSON
REMEDIAL INVESTIGATION

	Preliminary Cleanup Levels	FILL E: 1965-1966 Imported Construction-Quality Sand Fill Material													
		IT-SB-2(2-3.5) TU65H 10/31/2011	IT-SB-2(5-6.5) TU65I 10/31/2011	IT-SB-2(8-9.5) TU65J 10/31/2011	IT-SB-2(14-15.5) TU65K 10/31/2011	IT-MW-12(2-3.5) TV61A 11/03/2011	IT-MW-12(5-6.5) TV61K 11/03/2011	IT-MW-12(8-9.5) TV61B 11/03/2011	IT-MW-12(13-14.5) TV61C 11/03/2011	IT-MW-12(18-19.5) TV61D 11/03/2011	IT-MW-12(23-24.5) TV61E 11/03/2011	IT-MW-13(2-3.5) TV61F 11/03/2011	IT-MW-13(5-6.5) TV61G 11/03/2011	IT-MW-13(8-9.5) TV61H 11/03/2011	IT-MW-13(12.5-14) TV61I 11/03/2011
TOTAL PETROLEUM HYDROCARBONS (mg/kg)															
NWTPH-HCID															
Diesel-Range Organics	---														
Gasoline-Range Organics	---														
Lube Oil	---														
NWTPH-Dx															
Diesel-Range Organics	2,000	5.4 U	**32**	5.1 U	5.5 U	5.4 U	5.2 U	5.6 U	5.9 U	**180**	**37**	**55**	**8.4**	**32**	**130**
Oil-Range Organics	2,000	11 U	**290**	10 U	11 U	**19**	10 U	**39**	12 U	**400**	**66**	**200**	**50**	**87**	**380**
NWTPH-G															
Gasoline-Range Organics	100/30	6.5 U	5.4 U	6.9 U	6.2 U	6.1 U	6.8 U	5.4 U	6.9 U	**88**	10 U	**33**	5.9 U	**7.3**	**22**
C19 Branched Hydrocarbon	---														
C11 Hydrocarbon	---														
C18-C25 Hydrocarbons (total)	---														
TOTAL METALS (mg/kg)															
Methods 200.8/7471A/SW7196A															
Antimony	5	0.2 U	0.2 U	0.2 U	0.2 U	0.2 U	0.2 U	0.2 U	0.2 U	0.2 U	0.2 U	0.2 U	0.2 U	0.2 U	**0.3**
Barium	640	**47.4**	**46.4**	**44.3**	**47.9**	**47.1**	**38.6**	**63.7**	**45**	**87.8**	**45.7**	**46.4**	**45.3**	**119**	**143**
Beryllium	160	0.2 U	0.2 U	0.2 U	**0.2**	**0.2**	0.2 U	**0.2**	0.2 U	**0.3**	**0.3**	**0.2**	**0.2**	**0.3**	**0.3**
Cadmium	1.3	0.1 U	0.1 U	0.1 U	0.1 U	0.1 U	0.1 U	0.1 U	0.1 U	**1.9**	**0.3**	**0.1**	**0.1**	**0.1**	**2.2**
Chromium	1,480	**25.4**	**33**	**24.4**	**33.1**	**28.1**	**23.1**	**26.4**	**25**	**91**	**16.4**	**22**	**28**	**171**	**3430**
Chromium VI	3.8	0.426 U	0.427 U	0.438 U	0.432 U	**0.524**	0.413 U	**0.528**	0.475 U	0.513 U	0.509 U	0.449 U	**0.431**	0.465 U	0.459 U
Copper	36	**12.4**	**17.8**	**11.4**	**13.7**	**13.1**	**10.2**	**14.5**	**10.9**	**53.8**	**20**	**19.9**	**17.8**	**34.9**	**320**
Lead	250	**2.4**	**4.3**	**2.0**	**2.2**	**4.2**	**1.7**	**2.3**	**1.9**	**169**	**9.7**	**6**	**4.5**	**8.7**	**570**
Mercury	1.5	0.03 U	0.02 U	0.03 U	0.03 U	0.02 U	0.02 U	0.02 U	0.02 U	**0.22**	**0.05**	**0.02**	**0.04**	**0.02**	0.03 U
Nickel	210	**40.6**	**34.1**	**38.6**	**39.2**	**42.5**	**40.9**	**43.5**	**39.4**	**92.3**	**15.9**	**29.5**	**34.6**	**37.4**	**2220**
Selenium	1.0	0.5 U	0.5 U	0.5 U	0.5 U	0.5 U	0.5 U	0.5 U	0.6 U	0.6 U	0.6 U	0.5 U	0.5 U	0.5 U	0.6 U
Silver	170	0.2 U	0.2 U	0.2 U	0.2 U	0.2 U	0.2 U	0.2 U	0.2 U	**0.6**	0.2 U	0.2 U	0.2 U	0.2 U	**2.9**
Thallium	0.67	0.2 U	0.2 U	0.2 U	0.2 U	0.2 U	0.2 U	0.2 U	0.2 U	0.2 U	0.2 U	0.2 U	0.2 U	0.2 U	0.2 U
Zinc	1,400	**31**	**33**	**29**	**30**	**35**	**28**	**36**	**29**	**630**	**67**	**46**	**35**	**44**	**600**
CONVENTIONALS (mg/kg)															
Cyanide	---														
Oil and Grease	---														

TABLE Q-4
SOIL ANALYTICAL DETECTS
FORMER SLIP 5 AREA
BOEING ISAACSON-THOMPSON
REMEDIAL INVESTIGATION

	Preliminary Cleanup Levels	FILL E: 1965-1966 Imported Construction-Quality Sand Fill Material						
		IT-MW-13(15-16.5) TV61J 11/03/2011	IT-MW-13B(2-3.5) TW45J 11/10/2011	IT-MW-13B(5-6.5) TW45K 11/10/2011	IT-MW-13B(6.5-8) TW89A 11/11/2011	IT-MW-13B(8-9.5) TW89B 11/11/2011	IT-MW-13B(12.5-13.5) TW89C 11/11/2011	IT-TOWPATH-EXC12-B(2.7) TF71A 07/26/2011
VOLATILES (µg/kg)								
Method SW8260C								
Methylene Chloride	2,400	**1.6** J1	**2.3** J1	**4.2**	**4.3**	**2.0** J1	**3.6**	1.7 U
Acetone	510,000	**45**	**81**	**38**	**30** J	**43** J	**40** J	**23**
Carbon Disulfide	75,000	**4.1**	**1.1** J1	**3.0**	**7.7**	**12**	**3.7**	**1.1**
1,1-Dichloroethane	710	1.0 U	1.3 U	1.2 U	1.2 U	1.6 U	1.1 U	0.9 U
trans-1,2-Dichloroethene	19,000	1.0 U	1.3 U	1.2 U	1.2 U	1.6 U	1.1 U	0.9 U
cis-1,2-Dichloroethene	2,600	1.0 U	1.3 U	1.2 U	1.2 U	1.6 U	1.1 U	0.9 U
2-Butanone	430,000	**8.1**	**13**	**4.3** J1	**3.6** J1	**8.6**	**4.2** J1	4.3 U
Bromodichloromethane	89	1.0 U	1.3 U	1.2 U	1.2 U	1.6 U	1.1 U	0.9 U
Trichloroethene	51	1.0 U	1.3 U	1.2 U	1.2 U	1.6 U	1.1 U	0.9 U
Benzene	93	**2.4**	1.3 U	1.2 U	**1.2** J1	**1.9**	**1.0** J1	0.9 U
trans-1,3-Dichloropropene	---	1.0 U	1.3 U	1.2 U	1.2 U	1.6 U	1.1 U	0.9 U
4-Methyl-2-Pentanone (MIBK)	170,000	5.0 U	6.3 U	5.9 U	6.2 U	8.0 U	5.4 U	4.3 U
Toluene	100,000	**1.9**	1.3 U	**0.6** J1	**1.7**	**0.9** J1	**0.9** J1	0.9 U
Ethylbenzene	230	**0.9** J1	1.3 U	1.2 U	**0.6** J1	1.6 U	1.1 U	0.9 U
Trichlorofluoromethane	200,000	1.0 U	1.3 U	1.2 U	1.2 U	1.6 U	1.1 U	0.9 U
1,1,2-Trichloro-1,2,2-trifuoroethane	1,000,000,000	2.0 U	2.5 U	2.3 U	2.5 U	3.2 U	2.2 U	1.7 U
m,p-Xylene	160,000	**3.1**	1.3 U	1.2 U	**1.2** J1	1.6 U	**0.7** J1	0.9 U
o-Xylene	200,000	**1.9**	1.3 U	1.2 U	1.2 U	1.6 U	1.1 U	0.9 U
1,2-Dichlorobenzene	68,000	1.0 U	1.3 U	1.2 U	1.2 U	1.6 U	1.1 U	0.9 U
Methyl Iodide	---	1.0 U	1.3 U	1.2 U	**2.3**	1.6 U	1.1 U	0.9 U
1,3,5-Trimethylbenzene	800,000	**3.0**	1.3 U	1.2 U	**1.0** J1	1.6 U	1.1 U	0.9 U
1,2,4-Trimethylbenzene	800,000	**5.9**	1.3 U	1.2 U	**2.1**	1.6 U	**0.9** J1	0.9 U
Isopropylbenzene	78,000	1.0 U	1.3 U	1.2 U	**0.7** J1	1.6 U	1.1 U	0.9 U
n-Propylbenzene	11,000	**0.6** J1	1.3 U	1.2 U	**0.9** J1	1.6 U	1.1 U	0.9 U
tert-Butylbenzene	---	1.0 U	1.3 U	1.2 U	1.2 U	1.6 U	1.1 U	0.9 U
sec-Butylbenzene	---	1.0 U	1.3 U	1.2 U	**1.6**	1.6 U	1.1 U	0.9 U
4-Isopropyltoluene	---	**1.0** J, J1	1.3 U	1.2 U	**2.0**	1.6 U	**1.6**	0.9 U
n-Butylbenzene	27,000	1.0 U	1.3 U	1.2 U	**1.0** J1	1.6 U	1.1 U	0.9 U
Naphthalene	2,100	**5.9** J	6.3 U	**0.6** J1	**12**	**13**	**1.7** J1	**1300**
1,2-Dichloroethene (total)	---							
Total Xylenes	200,000							
SEMIVOLATILES (µg/kg)								
Method SW8270D								
Phenol	1,900,000	19 U	19 U	18 U	38 U	19 U	18 U	19 U
1,3-Dichlorobenzene	3,840	19 U	19 U	18 U	38 U	19 U	18 U	19 U
1,4-Dichlorobenzene	3,500	19 U	19 U	18 U	38 U	19 U	18 U	19 U
Benzyl Alcohol	8,000,000	19 U	19 U	18 U	38 U	19 UJ	18 UJ	19 U
1,2-Dichlorobenzene	68,000	19 U	19 U	18 U	38 U	19 U	18 U	19 U
2-Methylphenol	250,000	19 U	19 U	18 U	38 U	19 U	18 U	19 U
4-Methylphenol	41,000	39 U	37 U	35 U	76 U	38 U	37 U	39 U
Isophorone	---	19 U	19 U	18 U	38 U	19 U	18 U	19 U
2,4-Dimethylphenol	95,000	39 UJ	37 U	35 U	76 U	38 U	37 U	39 U
Benzoic Acid	9,000	390 U	370 U	350 U	760 U	380 U	370 U	390 U
Naphthalene	2,100	**82**	**12** J1	**8.8** J1	**240**	**120**	**14** J1	**2200**
2-Methylnaphthalene	320,000	**86**	**15** J1	18 U	**420**	**110**	**9.2** J1	**330**
Acenaphthylene	---	19 U	19 U	18 U	38 U	19 U	18 U	19 U
Acenaphthene	230,000	**23**	19 U	18 U	**130**	**120**	18 U	**120**
Dibenzofuran	80,000	**22**	19 U	18 U	**340**	**120**	18 U	19 U
Fluorene	150,000	**28** J	19 U	18 U	**1000**	**170**	18 U	**9.7** J

TABLE Q-4
SOIL ANALYTICAL DETECTS
FORMER SLIP 5 AREA
BOEING ISAACSON-THOMPSON
REMEDIAL INVESTIGATION

	Preliminary Cleanup Levels	FILL E: 1965-1966 Imported Construction-Quality Sand Fill Material						
		IT-MW-13(15-16.5) TV61J 11/03/2011	IT-MW-13B(2-3.5) TW45J 11/10/2011	IT-MW-13B(5-6.5) TW45K 11/10/2011	IT-MW-13B(6.5-8) TW89A 11/11/2011	IT-MW-13B(8-9.5) TW89B 11/11/2011	IT-MW-13B(12.5-13.5) TW89C 11/11/2011	IT-TOWPATH-EXC12-B(2.7) TF71A 07/26/2011
N-Nitrosodiphenylamine	204,000	19 U	19 U	18 U	**36** J1	19 U	18 U	19 U
Phenanthrene	---	**240**	**48**	**17** J1	**2200**	**420**	**34**	**29**
Carbazole	50,000	**20** J	19 U	18 U	**4200**	**52**	18 U	19 U
Anthracene	1,600,000	**28**	19 U	18 U	**16000**	**140**	**10** J1	19 U
Di-n-Butylphthalate	26,000	19 U	19 U	18 U	38 U	19 U	18 U	19 U
Fluoranthene	230,000	**150**	**34**	**14** J1	**1600**	**470**	**37**	**58**
Pyrene	240,000	**160**	**29**	**15** J1	**1500**	**410**	**35**	**46**
Butylbenzylphthalate	1,700	19 U	19 U	18 U	38 U	19 U	18 U	19 U
Benzo(a)anthracene	---	**59**	19 U	18 U	**780**	**120**	**16** J1	**34**
bis(2-Ethylhexyl)phthalate	56,600	24 U	37 U	37 U	**630**	86 U	44 U	24 U
Chrysene	---	**99**	**19**	18 U	**2200**	**160**	**32**	**35**
Di-n-Octyl phthalate	---	19 U	19 U	18 U	**29** J1	**30**	18 U	19 U
Benzo(a)pyrene	---	**48**	19 U	18 U	**430**	**120**	**19**	**34**
Indeno(1,2,3-cd)pyrene	---	**20**	19 U	18 U	**180**	**59**	18 U	**19**
Dibenz(a,h)anthracene	---	19 U	19 U	18 U	**94**	**17** J1	18 U	19 U
Benzo(g,h,i)perylene	---	**27**	19 U	18 U	**220**	**100**	**18** J1	**22**
1-Methylnaphthalene	16,000	**47**	**12** J1	18 U	**36** J1	**48**	18 U	**210**
Total Benzofluoranthenes	---	**75**	**20**	18 U	**840**	**220**	**34**	**61**
cPAH TEQ	15	**64**	**2**	ND	**641**	**163** J	**24** J	**46**
PAHs (µg/kg)								
Method SW8270D-SIM								
Naphthalene	2,100	**100**	**22**	**8.6**	**70**	**65**	**14**	**670**
2-Methylnaphthalene	320,000	**98**	**17**	**6.2**	**59**	**59**	**11**	**130**
1-Methylnaphthalene	16,000	**61**	**14**	**5**	**37**	**34**	**8**	**82**
Total Naphthalenes	---	**259**	**53**	**19.8**	**166**	**158**	**33**	**882**
Acenaphthylene	---	**10**	**3.3** J1	4.5 U	**12**	**7.8** J1	4.7 U	4.6 U
Acenaphthene	230,000	**29**	**11**	**2.9** J1	**150**	**100**	**12**	**50**
Fluorene	150,000	**35**	**8**	**4.2** J1	**210**	**150**	**9.6**	**5.2**
Phenanthrene	---	**260**	**33**	**19**	**800**	**350**	**48**	**2.8** J
Anthracene	1,600,000	**42**	**4.4** J1	**3.2** J1	**1500**	**170**	**12**	4.6 U
Fluoranthene	230,000	**180**	**35**	**26**	**1200**	**710**	**55**	**2.5** J
Pyrene	240,000	**180**	**27**	**24**	**980**	**530**	**50**	**2.7** J
Benzo(a)anthracene	---	**73**	**9.6**	**8.1**	**300**	**150**	**22**	4.6 U
Chrysene	---	**100**	**17**	**26**	**570**	**190**	**44**	4.6 U
Benzo(a)pyrene	---	**60**	**13**	**17**	**210**	**120**	**25**	4.6 U
Indeno(1,2,3-cd)pyrene	---	**24**	**8.5**	**4.3** J1	**93**	**75**	**14**	4.6 U
Dibenz(a,h)anthracene	---	**14**	**3.3** J1	**5.9**	**40**	**23**	**5.8**	4.6 U
Benzo(g,h,i)perylene	---	**36**	**11**	**11**	**170**	**140**	**32**	4.6 U
Dibenzofuran	80,000	**33**	**8.5**	**4.6**	**130**	**110**	**7.3**	**5.2**
Total Benzofluoranthenes	---	**96**	**29**	**19**	**430**	**230**	**37**	4.6 U
cPAH TEQ	15	**81.7**	**18.21** J	**20.99** J	**302**	**169.7**	**33.32**	ND
PCBs (µg/kg)								
Method SW8082								
Aroclor 1242	0.72	31 U	32 U	32 U	580 U	62 U	320 U	32 U
Aroclor 1248	220	31 U	32 U	32 U	4600 U	1200 U	320 U	32 U
Aroclor 1254	0.29	31 U	32 U	32 U	**12,000**	**3000**	320 U	32 U
Aroclor 1260	5.4	31 U	32 U	32 U	1200 U	**420**	**5200**	32 U
Total PCBs	1.8	ND	ND	ND	**12,000**	**3420**	**5200**	ND

TABLE Q-4
SOIL ANALYTICAL DETECTS
FORMER SLIP 5 AREA
BOEING ISAACSON-THOMPSON
REMEDIAL INVESTIGATION

	Preliminary Cleanup Levels	FILL E: 1965-1966 Imported Construction-Quality Sand Fill Material						
		IT-MW-13(15-16.5) TV61J 11/03/2011	IT-MW-13B(2-3.5) TW45J 11/10/2011	IT-MW-13B(5-6.5) TW45K 11/10/2011	IT-MW-13B(6.5-8) TW89A 11/11/2011	IT-MW-13B(8-9.5) TW89B 11/11/2011	IT-MW-13B(12.5-13.5) TW89C 11/11/2011	IT-TOWPATH-EXC12-B(2.7) TF71A 07/26/2011
TOTAL PETROLEUM HYDROCARBONS (mg/kg)								
NWTPH-HCID								
Diesel-Range Organics	---							
Gasoline-Range Organics	---							
Lube Oil	---							
NWTPH-Dx								
Diesel-Range Organics	2,000	**48**	**9.8**	**38**	**380** J	**220** J	**28** J	5.4 U
Oil-Range Organics	2,000	**140**	**32**	**50**	**650**	**830**	**140**	11 U
NWTPH-G								
Gasoline-Range Organics	100/30	**19**	6.5 U	6.6 U	**120**	6.5 U	6.5 U	6.9 U
C19 Branched Hydrocarbon	---							
C11 Hydrocarbon	---							
C18-C25 Hydrocarbons (total)	---							
TOTAL METALS (mg/kg)								
Methods 200.8/7471A/SW7196A								
Antimony	5	0.2 U	0.2 U	0.2 U	0.2 UJ	0.2 U	0.2 U	0.2 U
Barium	640	**145**	**50.8**	**43.6**	**69.8** J	**197**	**59**	**49.1**
Beryllium	160	0.2 U	**0.2**	0.2 U	**0.3**	**0.3**	0.2 U	0.2 U
Cadmium	1.3	**1**	0.1 U	0.1 U	**0.6**	**3.7**	**0.2**	0.1 U
Chromium	1,480	**1640**	**15.7**	**20.8**	**25.2**	**218**	**30.5**	**28**
Chromium VI	3.8	**0.456**	0.453 U	0.452 U	0.463 U	0.439 U	0.465 U	0.421 U
Copper	36	**209**	**23.6**	**15.3**	**53.6** J	**197**	**28.1**	**12.1**
Lead	250	**421**	**7.5**	**5.5**	**51.8**	**348**	**17.3**	**2.5**
Mercury	1.5	0.02 U	**0.05**	0.03 U	**0.17**	**0.11**	**0.02**	0.02 U
Nickel	210	**869**	**17.8**	**28.9**	**30.9** J	**170**	**17.3**	**34.4**
Selenium	1.0	0.6 U	0.6 U	0.5 U	0.6 U	0.6 U	0.6 U	0.5 U
Silver	170	**2.2**	0.2 U	0.2 U	**1.1**	**1.2**	0.2 U	0.2 U
Thallium	0.67	0.2 U	0.2 U	0.2 U	0.2 U	0.2 U	0.2 U	0.2 U
Zinc	1,400	**252**	**42**	**44**	**390** J	**630**	**72**	**31**
CONVENTIONALS (mg/kg)								
Cyanide	---							
Oil and Grease	---							

µg/kg = micrograms per kilogram
mg/kg = milligrams per kilogram
TEQ = Toxic Equivalent Concentration
SIM = Select Ion Monitoring
cPAH = Carcinogenic Polycyclic Aromatic Hydrocarbons
PCB = Polychlorinated Biphenyls
NWTPH-Dx = Total Petroleum Hydrocarbon-Diesel Range
NWTPH-G = Total Petroleum Hydrocarbon-Gasoline Range
NWTPH-HCID = Total Petroleum Hydrocarbon-Hydrocarbon Identification Method
U = Indicates the compound was not detected at or above the reporting limit.
UJ = The analyte was not detected in the sample; the reported sample reporting limit is an estimate.
J = Indicates the analyte was positively identified; the associated numerical value is the approximate concentration of the analyte in the sample.
J1 = Laboratory flag indicating the analyte was positively identified; the associated concentration is approximate and less than the reporting limit, but equal to or greater than the detection limit.
UJ2 = The analyted was not detected in the sample at or above the numerical value shown; the numerical value is below the reporting limit, but greater than the detection limit.
B = Method blank contamination
M = Estimated value for an analyte detected and confirmed by an analyst, but with low spectral match parameters. This flag is used only for GC-MS analyses.
ND = Not Detected.
Bold = Exceedance
Box = Exceeds Preliminary Cleanup Level.
P = The analyte was detected on both chromatographic columns but the quantified values differ by 40% RPD with no obvious chromatographic interference. The higher of the two values is reported by the laboratory.

(a) Sample TDP32 (11) has been categorized with the hydraulic test pad area samples (Fill B) even though the sample was collected within Fill E.

TABLE Q-5
HISTORICAL ARSENIC SOIL ANALYTICAL DETECTS
SOUTH OF FORMER SLIP 5 AREA
BOEING ISAACSON-THOMPSON

Sample ID	Sample Date	Sample Depth	Arsenic (mg/kg)
			pCUL = 7
Western Property Boundary			
MW-7	10/31/11	2-3.5	5.6
MW-7	10/31/11	5-6.5	24.5
MW-7	11/4/11	8-9.5	3.0
MW-7	11/4/11	13.5-15	0.9
Southern Property Boundary/Former Washdown System Collection Sumps			
TDP1	11/3/08	9	9
TDP3	11/3/08	5	6
TDP4	11/3/08	4	18
TDP26	11/6/08	8	7
MW-5	11/1/11	2-3.5	4.3
MW-5	11/1/11	5-6.5	8.1
MW-5	11/2/11	8-9	4.6
MW-5	11/2/11	14-15.5	2.1
MW-6	11/1/11	2-3.5	2.2
MW-6	11/1/11	5-6.5	2.3
MW-6	11/2/11	8-9.5	7.0
MW-6	11/2/11	14-15.5	1.1
MW-6	11/2/11	20-21.5	1.3
MW-6	11/2/11	23-24.5	1.0
Eastern Property Boundary			
IT-Bldg-14-11Exc2-B(2.5)	7/28/11	2.5	4
IT-Bldg-14-11Exc3-B(3.0)	7/28/11	3.0	3.6
IT-Bldg-14-11Exc4-B(2.4)	7/28/11	2.4	3.6
IT-Bldg-14-11Excl-B(2.1)	7/28/11	2.1	6.8
IT-BLDG14-11-SURF	8/18/11		2.9
IT-BUILDING14-11EXC5-B(.5)	8/18/11	0.5	3.3
IT-PIVExc2-B(5.0)	8/9/11	5.0	3.3
IT-PIVExc2-SW(2.5)	8/9/11	2.5	2.4
IT-TowpathExc13-(1.3)	8/2/11	1.3	3.4
IT-MW-4	11/8/11	2-3.5	4.1
IT-MW-4	11/8/11	5-6.5	4.1
IT-MW-4	11/8/11	8-9.5	3.0
IT-MW-4	11/8/11	13.5-15	1.9
Northern and Eastern Portions of 14-01 Building			
IT-BLDG1401-TRENCH-2N	05/02/11		2.9
IT-BLDG1401-TRENCH-2S	05/02/11		2.7
IT-BLDG1401-TRENCH-3N	05/03/11		2.3
IT-BLDG1401-TRENCH-3S	05/03/11		4.0

TABLE Q-5
HISTORICAL ARSENIC SOIL ANALYTICAL DETECTS
SOUTH OF FORMER SLIP 5 AREA
BOEING ISAACSON-THOMPSON

Sample ID	Sample Date	Sample Depth	Arsenic (mg/kg)
			pCUL = 7
IT-BLDG1401-TRENCH-4N	05/12/11		3.1
IT-BLDG1401-TRENCH-4S	05/12/11		4.5
IT-BLDG1401-TRENCH-5N	5/13/11		5.3
IT-BLDG1401-TRENCH-5S	5/13/11		2.3
IT-Bldg1401-OuttakesExc-1	5/20/11	3.5	3.2
IT-Bldg1401-OuttakesExc-2	5/20/11	3.7	3.6
IT-Bldg1401-OuttakesExc-3	5/23/11	2.9	2.9
IT-Bldg1401-OuttakesExc-4	5/23/11	3.05	3.4
Former Washdown/Degreaser Area			
TDP12	11/4/08	7	8
MW-1	4/25/11	3-4	5.5
MW-1	4/25/11	5-6	3.1
MW-1	4/25/11	8-9	1.7
MW-2	4/26/11	2-3	2.5
MW-2	4/26/11	5-6	4.6
MW-2	4/26/11	8-9	11.4
MW-3	4/26/11	2-3	2.8
MW-3	4/26/11	5-6	3.4
MW-3	4/26/11	9-10	5.5
SB-1	4/25/11	3-4	2.9
SB-1	4/25/11	5-6	3.2
SB-1	4/25/11	8-9	11.2
IT-Bldg1401-FootingExc1-SW	6/23/11	4.0	2.9
IT-Bldg1401-FootingExc1-B	6/23/11	6.0	3.2
IT-Bldg1401-FootingExc1-B	6/27/11	7.5	6.5
IT-Bldg1401-FootingExc3-B	6/22/11	4.0	3.2
IT-Bldg1401-FootingExc5-SW	6/23/11	4.0	2.7
IT-Bldg1401-FootingExc5-B	6/23/11	6.0	2.5
IT-Bldg1401-Footing Exc8-B	6/22/11	2.5	1.7
IT-Bldg1401-FootingExc10-B	6/24/11	1.5	1.6
IT-Bldg1401-FootingExc14-B	6/22/11	4.0	3.2
IT-Bldg1401-FootingExc15-B	6/22/11	4.0	2.8
Former Washdown System Collection Tanks/Loading Dock Area			
234	1/22/88	2.5	5
234	1/22/88	7.5	2
234	1/22/88	12.5	3
234	1/22/88	17.5	2
TDP14	11/4/08	4	17
TDP15	11/4/08	4	9
TDP16	11/5/08	3	7
TDP17	11/5/08	4	7
TDP18	11/5/08	4	12

TABLE Q-5
HISTORICAL ARSENIC SOIL ANALYTICAL DETECTS
SOUTH OF FORMER SLIP 5 AREA
BOEING ISAACSON-THOMPSON

Sample ID	Sample Date	Sample Depth	Arsenic (mg/kg)
			pCUL = 7
IT-TOWPATHEXC2-B	7/19/11	0.7	2.2
IT-TOWPATHEXC3-B	7/19/11	0.7	5.8
IT-TOWPATHEXC4-B	7/19/11	0.7	5.7
IT-TOWPATHEXC5-B	7/19/11	0.7	3.9
IT-TOWPATHEXC6-B	7/19/11	0.7	6.1
IT-TOWPATHEXC7-B	7/19/11	0.7	3.8
MW-8	11/7/11	2-3.5	3.2
MW-8	11/7/11	5-6.5	3.8
MW-8	11/7/11	8-9.5	2.9
MW-8	11/7/11	14-15.5	2.0
Vicinity of I-206(s)			
I-206s	1/19/88	2.5	5
I-206s	1/19/88	7.5	7
I-206s	1/19/88	12.5	2
I-206s	1/19/88	17.5	22
I-206s	1/19/88	27.5	9
HP-1	4/19/00	3	4
HP-1	4/19/00	6	3
HP-1	4/19/00	10	1.8
HP-1	4/19/00	15	0.7
HP-1	4/19/00	20	5.8
HP-2	4/19/00	1	2.9
HP-2	4/19/00	2	1.2
HP-2	4/19/00	3	2.5
HP-2	4/19/00	4	1.2
HP-2	4/19/00	5	1.3
HP-2	4/19/00	6	3.3
HP-2	4/19/00	7	12
HP-2	4/19/00	8	3.7
HP-2	4/19/00	9	2.3
HP-2	4/19/00	10	1.6
HP-2	4/19/00	11	1.6
HP-2	4/19/00	12	1.5
HP-2	4/19/00	14	1.6
HP-2	4/19/00	15	1
HP-2	4/19/00	16	11
HP-2	4/19/00	20	7
Vicinity of I-206(s) (Cont.)			
HP-3	4/19/00	1	4
HP-3	4/19/00	2	7
HP-3	4/19/00	3	4.2
HP-3	4/19/00	4	2.6
HP-3	4/19/00	5	7
HP-3	4/19/00	6	2.5
HP-3	4/19/00	7	6
HP-3	4/19/00	8	3.5
HP-3	4/19/00	9	5
HP-3	4/19/00	10	4
HP-3	4/19/00	12	1.3
HP-3	4/19/00	13	1.8
HP-3	4/19/00	14	3
HP-3	4/19/00	15	4
HP-3	4/19/00	16	43
HP-3	4/19/00	20	20

TABLE Q-5
HISTORICAL ARSENIC SOIL ANALYTICAL DETECTS
SOUTH OF FORMER SLIP 5 AREA
BOEING ISAACSON-THOMPSON

Sample ID	Sample Date	Sample Depth	Arsenic (mg/kg)
			pCUL = 7
HP-4	4/19/00	1	3
HP-4	4/19/00	2	3.5
HP-4	4/19/00	3	14
HP-4	4/19/00	4	3
HP-4	4/19/00	5	4
HP-4	4/19/00	6	5
HP-4	4/19/00	7	11
HP-4	4/19/00	8	3.3
HP-4	4/19/00	9	13
HP-4	4/19/00	10	1.6
HP-4	4/19/00	11	4.6
HP-4	4/19/00	12	1.5
HP-4	4/19/00	13	2.1
HP-4	4/19/00	16	5
HP-4	4/19/00	17	1.6
HP-4	4/19/00	20	5.2
HP-5	4/19/00	2	2.3
HP-5	4/19/00	5	3
HP-5	4/19/00	10	1.7
HP-5	4/19/00	15	1.4
HP-5	4/19/00	20	2.3
HP-6	4/19/00	2	2.1
HP-6	4/19/00	5	2.3
HP-6	4/19/00	10	3.2
HP-6	4/19/00	16	3.7
HP-6	4/19/00	20	4
TP-101-B	10/24/11	12-13	2.4
TP-102-B	10/25/11	13-14	1.2
TP-103-SWE	10/25/11	5-6	7.1
TP-103-SWE	10/25/11	6-7	5.1
TP-103-SWE	10/25/11	12-13	1.5
Other West of Building			
21	8/1/83	1.5	6
21	8/1/83	8.5	5.2
240	1/22/88	2.5	4
240	1/22/88	7.5	4
240	1/22/88	12.5	3
240	1/22/88	17.5	2
B-21	1983	1.5	6
B-21	1983	8.5	5.2

mg/kg = milligrams per kilogram
pCUL = Preliminary Cleanup Level
Box = Exceeds Preliminary Cleanup Level

TABLE Q-6
SOIL ANALYTICAL DETECTS
SOUTH OF FORMER SLIP 5 AREA
BOEING ISAACSON-THOMPSON
REMEDIAL INVESTIGATION

		Western Property Boundary				Southern Property Boundary/Former Washdown System Collection Sumps								
	Preliminary Cleanup Levels	IT-MW-7(2-3.5) TU65A 10/31/2011	IT-MW-7(5-6.5) TU65B 10/31/2011	IT-MW-7(8-9.5) TV85A 11/04/2011	IT-MW-7(13.5-15) TV85B 11/04/2011	TDP1 (9) NX93A 11/3/2008	TDP2 (5) NX93B 11/3/2008	TDP3 (5) NX93C 11/3/2008	TDP4 (4) NX93D 11/3/2008	TDP25 (9) NY44J 11/5/2008	TDP26 (8) NY64A 11/6/2008	PBI-11 (2) PI42A 7/28/2009	PBI-11 (5) PI42B 7/28/2009	PBI-11 (8) PI42C 7/28/2009
VOLATILES (µg/kg)														
Method SW8260C														
Chloromethane	1,600	1.3 U	1.4 U	1.2 U	1.2 U	1.2 U	0.8 U	1 U	1 U	0.7 U	0.7 U			
Vinyl Chloride	7.4	1.3 U	1.4 U	1.2 U	1.2 U	1.2 U	0.8 U	1 U	1 U	0.7 U	0.7 U	0.6 U	1 U	0.9 U
Methylene Chloride	2,400	**2.8** J	**3.1** J	**1.9** J	**4.2** J	**7.7**	1.6 U	1.9 U	2 U	1.3 U	1.4 U			
Acetone	510,000	34 U	**58**	25 U	**14**	**280**	**9.2**	**9**	**22**	**18**	**39**			
Carbon Disulfide	75,000	1.3 U	1.4 U	1.2 U	1.2 U	**7.7**	0.8 U	1 U	1 U	0.7 U	0.7 U			
1,1-Dichloroethane	710	1.3 U	1.4 U	1.2 UJ	1.2 U	**1.6**	0.8 U	1 U	1 U	0.7 U	0.7 U			
trans-1,2-Dichloroethene	19,000	1.3 U	1.4 U	1.2 U	1.2 U	**2.6**	0.8 U	1 U	1 U	0.7 U	0.7 U			
cis-1,2-Dichloroethene	2,600	1.3 U	1.4 U	1.2 U	1.2 U	**74**	0.8 U	1 U	1 U	0.7 U	**5.1**	0.6 U	1 U	0.9 U
2-Butanone	430,000	6.4 U	6.8 U	6.1 UJ	6.0 U	**53**	4.1 U	4.8 U	5.1 U	3.3 U	**4.2**			
1,1,1-Trichloroethane	1,900,000	1.3 U	1.4 U	1.2 U	1.2 U	1.2 U	0.8 U	1 U	1 U	0.7 U	0.7 U			
Trichloroethene	51	**46**	**22**	1.2 U	**1.4**	**6.2**	0.8 U	1 U	1 U	**6.2**	**66**	**2.1**	**11**	**7**
Benzene	93	**0.8** J1	**1.9**	1.2 U	1.2 U	**1.5**	0.8 U	1 U	1 U	0.7 U	0.7 U			
Tetrachloroethene	260	**2.7**	**4.6**	**0.9** J1	1.7 U	1.2 U	0.8 U	1 U	1 U	0.7 U	**1**	0.6 U	**2.9**	**2**
Toluene	100,000	**1.5**	**1.0** J1	1.2 U	1.2 U	1.2 U	0.8 U	1 U	1 U	0.7 U	0.7 U			
Trichlorofluoromethane	200,000	1.3 U	1.4 U	1.2 U	1.2 U	1.2 U	0.8 U	1 U	1 U	0.7 U	0.7 U			
m,p-Xylene	160,000	1.3 U	1.4 U	1.2 U	1.2 U	1.2 U	0.8 U	1 U	1 U	0.7 U	0.7 U			
Methyl Iodide	---	1.3 U	1.4 U	1.2 U	1.2 U									
1,2,4-Trimethylbenzene	800,000	1.3 U	1.4 U	1.2 U	1.2 U									
sec-Butylbenzene	---	1.3 U	1.4 U	1.2 U	1.2 U									
SEMIVOLATILES (µg/kg)														
Method SW8270D														
Phenol	1,900,000	19 U	19 U	19 U	19 U	62 U				64 U	59 U			
Benzyl Alcohol	8,000,000	19 U	19 U	19 U	19 U	62 U				64 U	59 U			
4-Methylphenol	41,000	39 U	39 U	38 U	37 U	62 U				64 U	59 U			
Benzoic Acid	9,000	390 U	390 U	380 U	370 U	620 U				640 U	590 U			
Naphthalene	2,100	**12** J1	**9.7** J1	19 U	**11** J1	62 U				64 U	59 U			
2-Methylnaphthalene	320,000	19 U	19 U	19 U	**16** J1	62 U				64 U	59 U			
Acenaphthene	230,000	19 U	19 U	19 U	19 U	62 U				64 U	59 U			
Dibenzofuran	80,000	19 U	19 U	19 U	19 U	62 U				64 U	59 U			
Fluorene	150,000	19 U	19 U	19 U	19 U	62 U				64 U	59 U			
Phenanthrene	---	**18** J1	**24**	19 U	19 U	62 U				64 U	59 U			
Anthracene	1,600,000	19 U	19 U	19 U	19 U	62 U				64 U	59 U			
Fluoranthene	230,000	**18** J1	**16** J1	19 U	19 U	62 U				64 U	59 U			
Pyrene	240,000	**16** J1	**13** J1	19 U	19 U	62 U				64 U	59 U			
Butylbenzylphthalate	1,700	**200**	**16** J1	19 U	19 U	62 U				64 U	59 U			
Benzo(a)anthracene	---	19 U	19 U	19 U	19 U	62 U				64 U	59 U			
bis(2-Ethylhexyl)phthalate	56,600	22 UJ2	16 UJ2	36 U	84 U	62 U				64 U	59 U			
Chrysene	---	**19**	**14** J1	19 U	19 U	62 U				64 U	59 U			
Benzo(a)pyrene	---	19 U	19 U	19 U	19 U	62 U				64 U	59 U			
Indeno(1,2,3-cd)pyrene	---	19 U	19 U	19 U	19 U	62 U				64 U	59 U			
Dibenz(a,h)anthracene	---	19 U	19 U	19 U	19 U	62 U				64 U	59 U			
Benzo(g,h,i)perylene	---	**9.7** J1	19 U	19 U	19 U	62 U				64 U	59 U			
1-Methylnaphthalene	16,000	19 U	19 U	19 U	19 U	62 U				64 U	59 U			
Total Benzofluoranthenes	---	**24**	**17** J1	19 U	19 U									
cPAH TEQ	15	**3** J	**2** J	ND	ND	ND				ND	ND			

TABLE Q-6
SOIL ANALYTICAL DETECTS
SOUTH OF FORMER SLIP 5 AREA
BOEING ISAACSON-THOMPSON
REMEDIAL INVESTIGATION

		Western Property Boundary				Southern Property Boundary/Former Washdown System Collection Sumps								
	Preliminary Cleanup Levels	IT-MW-7(2-3.5) TU65A 10/31/2011	IT-MW-7(5-6.5) TU65B 10/31/2011	IT-MW-7(8-9.5) TV85A 11/04/2011	IT-MW-7(13.5-15) TV85B 11/04/2011	TDP1 (9) NX93A 11/3/2008	TDP2 (5) NX93B 11/3/2008	TDP3 (5) NX93C 11/3/2008	TDP4 (4) NX93D 11/3/2008	TDP25 (9) NY44J 11/5/2008	TDP26 (8) NY64A 11/6/2008	PBI-11 (2) PI42A 7/28/2009	PBI-11 (5) PI42B 7/28/2009	PBI-11 (8) PI42C 7/28/2009
PAHs (µg/kg)														
Method SW8270D-SIM														
Naphthalene	2,100	**17**	**7.4**	4.6 U	4.6 U									
2-Methylnaphthalene	320,000	**13**	**9.6**	**2.3** J1	4.6 U									
1-Methylnaphthalene	16,000	**22**	**9.0**	4.6 U	4.6 U									
Total Naphthalenes	---	**52**	**26**	**2.3** J1	4.6 U									
Acenaphthene	230,000	**42**	4.8 U	4.6 U	4.6 U									
Fluorene	150,000	**76**	4.8 U	4.6 U	4.6 U									
Phenanthrene	---	**1100**	**29**	**4.6**	4.6 U									
Anthracene	1,600,000	**130**	4.8 U	4.6 U	4.6 U									
Fluoranthene	230,000	**1400**	**22**	4.6 U	4.6 U									
Pyrene	240,000	**1300**	**19**	4.6 U	4.6 U									
Benzo(a)anthracene	---	**420**	**7.6**	4.6 U	4.6 U									
Chrysene	---	**430**	**16**	4.6 U	4.6 U									
Benzo(a)pyrene	---	**390**	**8.5**	4.6 U	4.6 U									
Indeno(1,2,3-cd)pyrene	---	**240**	**7.4**	4.6 U	4.6 U									
Dibenz(a,h)anthracene	---	**70**	4.8 U	4.6 U	4.6 U									
Benzo(g,h,i)perylene	---	**270**	**8.2**	4.6 U	4.6 U									
Dibenzofuran	80,000	**31**	**5.7**	4.6 U	4.6 U									
Total Benzofluoranthenes	---	**700**	**18**	4.6 U	4.6 U									
cPAH TEQ	15	**537**	**12.0**	ND	ND									
PCBs (µg/kg)														
Method SW8082														
Aroclor 1254	0.29	**660**	**50**	33 U	32 U	33 U				31 U	32 U			
Aroclor 1260	5.4	170 U	33 U	33 U	32 U	33 U				31 U	32 U			
Total PCBs	1.8	**660**	**50**	ND	ND	ND				ND	ND			
TOTAL PETROLEUM HYDROCARBONS (mg/kg)														
NWTPH-HCID														
Diesel-Range Organics	---					50 U	50 U	**57**	**53**	50 U	50 U			
Gasoline-Range Organics	---					20 U	20 U	23 U	21 U	20 U	20 U			
Lube Oil	---					**100**	100 U	**110**	**110**	**100**	**100**			
NWTPH-Dx														
Diesel-Range Organics	2,000	**18**	**6.8**	5.5 U	6.0 U	**16**	**19**	**110**	**78**	**61**	**6.5**			
Oil-Range Organics	2,000	**27**	**28**	11 U	12 U	**99**	**95**	**740**	**640**	**340**	**24**			
NWTPH-G														
Gasoline-Range Organics	100/30	7.2 U	7.9 U	7.2 U	8.3 U									

TABLE Q-6
SOIL ANALYTICAL DETECTS
SOUTH OF FORMER SLIP 5 AREA
BOEING ISAACSON-THOMPSON
REMEDIAL INVESTIGATION

		Western Property Boundary				Southern Property Boundary/Former Washdown System Collection Sumps								
	Preliminary Cleanup Levels	IT-MW-7(2-3.5) TU65A 10/31/2011	IT-MW-7(5-6.5) TU65B 10/31/2011	IT-MW-7(8-9.5) TV85A 11/04/2011	IT-MW-7(13.5-15) TV85B 11/04/2011	TDP1 (9) NX93A 11/3/2008	TDP2 (5) NX93B 11/3/2008	TDP3 (5) NX93C 11/3/2008	TDP4 (4) NX93D 11/3/2008	TDP25 (9) NY44J 11/5/2008	TDP26 (8) NY64A 11/6/2008	PBI-11 (2) PI42A 7/28/2009	PBI-11 (5) PI42B 7/28/2009	PBI-11 (8) PI42C 7/28/2009
TOTAL METALS (mg/kg)														
Methods 200.8/7471A/SW7196A														
Barium	640	**51.3**	**62.1**	**44.9**	**20.8**									
Beryllium	160	0.2 U	**0.3**	0.2 U	0.2 U									
Cadmium	1.3	**0.3**	**0.4**	0.1 U	0.1 U	**0.4**	0.2 U	**0.2**	**1**	0.2 U	**0.4**			
Chromium	1,480	**19.1**	**16.8**	**11.2**	**9.8**	**12.3**	**21.8**	**21.2**	**29**	**35.8**	**20.8**			
Chromium VI	3.8	0.462 U	0.472 U	0.468 U	0.524 U									
Copper	36	**25.2**	**26.1**	**19.2**	**10.3**	**31.6**	**23.2**	**24.8**	**67.1**	**14.3**	**36.6**			
Lead	250	**36.6**	**22.0**	**2.5**	**1.8**	**17**	**2**	**139**	**106**	**2**	**12**			
Mercury	1.5	**0.05**	**0.08**	0.03 U	0.02 U	**0.06**	0.05 U	**0.06**	**0.2**	0.04 U	0.06 U			
Nickel	210	**12.1**	**15.3**	**10.4**	**6.8**									
Zinc	1,400	**47**	**70**	**25**	**21**									
CONVENTIONALS (mg/kg)														
Oil and Grease	---													

TABLE Q-6
SOIL ANALYTICAL DETECTS
SOUTH OF FORMER SLIP 5 AREA
BOEING ISAACSON-THOMPSON
REMEDIAL INVESTIGATION

		Southern Property Boundary/Former Washdown System Collection Sumps										
	Preliminary Cleanup Levels	PBI-12 (2) PI42D 7/28/2009	PBI-12 (5) PI42E 7/28/2009	PBI-12 (8) PI42F 7/28/2009	PBI-13 (2) PI42G 7/28/2009	PBI-13 (5) PI42H 7/28/2009	PBI-13 (8) PI42I 7/28/2009	PBI-14 (2)	PBI-14 (5)	PBI-15 (2) PI42L 7/28/2009	PBI-15 (5) PI42M 7/28/2009	PBI-15 (8) PI42N 7/28/2009
VOLATILES (µg/kg)												
Method SW8260C												
Chloromethane	1,600											
Vinyl Chloride	7.4	1 U	0.9 U	1.1 U	0.9 U	0.9 U	1 U	0.9 U	0.8 U	0.9 U	1 U	0.9 U
Methylene Chloride	2,400											
Acetone	510,000											
Carbon Disulfide	75,000											
1,1-Dichloroethane	710											
trans-1,2-Dichloroethene	19,000											
cis-1,2-Dichloroethene	2,600	1 U	0.9 U	1.1 U	0.9 U	0.9 U	1 U	0.9 U	0.8 U	0.9 U	1 U	0.8 U
2-Butanone	430,000											
1,1,1-Trichloroethane	1,900,000											
Trichloroethene	51	**3.7**	**8.3**	1.1 U	**20**	**28**	**35**	0.9 U	**1.5**	0.9 U	1 U	0.8 U
Benzene	93											
Tetrachloroethene	260	1 U	**2.1**	1.1 U	**1.7**	**2.3**	**5**	0.9 U	0.8 U	0.9 U	1 U	0.8 U
Toluene	100,000											
Trichlorofluoromethane	200,000											
m,p-Xylene	160,000											
Methyl Iodide	---											
1,2,4-Trimethylbenzene	800,000											
sec-Butylbenzene	---											
SEMIVOLATILES (µg/kg)												
Method SW8270D												
Phenol	1,900,000											
Benzyl Alcohol	8,000,000											
4-Methylphenol	41,000											
Benzoic Acid	9,000											
Naphthalene	2,100											
2-Methylnaphthalene	320,000											
Acenaphthene	230,000											
Dibenzofuran	80,000											
Fluorene	150,000											
Phenanthrene	---											
Anthracene	1,600,000											
Fluoranthene	230,000											
Pyrene	240,000											
Butylbenzylphthalate	1,700											
Benzo(a)anthracene	---											
bis(2-Ethylhexyl)phthalate	56,600											
Chrysene	---											
Benzo(a)pyrene	---											
Indeno(1,2,3-cd)pyrene	---											
Dibenz(a,h)anthracene	---											
Benzo(g,h,i)perylene	---											
1-Methylnaphthalene	16,000											
Total Benzofluoranthenes	---											
cPAH TEQ	15											

TABLE Q-6
SOIL ANALYTICAL DETECTS
SOUTH OF FORMER SLIP 5 AREA
BOEING ISAACSON-THOMPSON
REMEDIAL INVESTIGATION

		Southern Property Boundary/Former Washdown System Collection Sumps										
	Preliminary Cleanup Levels	PBI-12 (2) PI42D 7/28/2009	PBI-12 (5) PI42E 7/28/2009	PBI-12 (8) PI42F 7/28/2009	PBI-13 (2) PI42G 7/28/2009	PBI-13 (5) PI42H 7/28/2009	PBI-13 (8) PI42I 7/28/2009	PBI-14 (2)	PBI-14 (5)	PBI-15 (2) PI42L 7/28/2009	PBI-15 (5) PI42M 7/28/2009	PBI-15 (8) PI42N 7/28/2009
PAHs (µg/kg)												
Method SW8270D-SIM												
Naphthalene	2,100											
2-Methylnaphthalene	320,000											
1-Methylnaphthalene	16,000											
Total Naphthalenes	---											
Acenaphthene	230,000											
Fluorene	150,000											
Phenanthrene	---											
Anthracene	1,600,000											
Fluoranthene	230,000											
Pyrene	240,000											
Benzo(a)anthracene	---											
Chrysene	---											
Benzo(a)pyrene	---											
Indeno(1,2,3-cd)pyrene	---											
Dibenz(a,h)anthracene	---											
Benzo(g,h,i)perylene	---											
Dibenzofuran	80,000											
Total Benzofluoranthenes	---											
cPAH TEQ	15											
PCBs (µg/kg)												
Method SW8082												
Aroclor 1254	0.29											
Aroclor 1260	5.4											
Total PCBs	1.8											
TOTAL PETROLEUM HYDROCARBONS (mg/kg)												
NWTPH-HCID												
Diesel-Range Organics	---											
Gasoline-Range Organics	---											
Lube Oil	---											
NWTPH-Dx												
Diesel-Range Organics	2,000											
Oil-Range Organics	2,000											
NWTPH-G												
Gasoline-Range Organics	100/30											

TABLE Q-6
SOIL ANALYTICAL DETECTS
SOUTH OF FORMER SLIP 5 AREA
BOEING ISAACSON-THOMPSON
REMEDIAL INVESTIGATION

		Southern Property Boundary/Former Washdown System Collection Sumps										
	Preliminary Cleanup Levels	PBI-12 (2) PI42D 7/28/2009	PBI-12 (5) PI42E 7/28/2009	PBI-12 (8) PI42F 7/28/2009	PBI-13 (2) PI42G 7/28/2009	PBI-13 (5) PI42H 7/28/2009	PBI-13 (8) PI42I 7/28/2009	PBI-14 (2)	PBI-14 (5)	PBI-15 (2) PI42L 7/28/2009	PBI-15 (5) PI42M 7/28/2009	PBI-15 (8) PI42N 7/28/2009
TOTAL METALS (mg/kg)												
Methods 200.8/7471A/SW7196A												
Barium	640											
Beryllium	160											
Cadmium	1.3											
Chromium	1,480											
Chromium VI	3.8											
Copper	36											
Lead	250											
Mercury	1.5											
Nickel	210											
Zinc	1,400											
CONVENTIONALS (mg/kg)												
Oil and Grease	---											

TABLE Q-6
SOIL ANALYTICAL DETECTS
SOUTH OF FORMER SLIP 5 AREA
BOEING ISAACSON-THOMPSON
REMEDIAL INVESTIGATION

		Southern Property Boundary/Former Washdown System Collection Sumps										Eastern Property Boundary			
	Preliminary Cleanup Levels	IT-MW-5(2-3.5) TU90A 11/01/2011	IT-MW-5(5-6.5) TU90B 11/01/2011	IT-MW-5(8-9) TV16A 11/02/2011	IT-MW-5(14-15.5) TV16B 11/02/2011	IT-MW-6(2-3.5) TU90C 11/01/2011	IT-MW-6(5-6.5) TU90D 11/01/2011	IT-MW-6(8-9.5) TV16C 11/02/2011	IT-MW-6(14-15.5) TV16D 11/02/2011	IT-MW-6(20-21.5) TV16E 11/02/2011	IT-MW-6(23-24.5) TV16F 11/02/2011	TDP20 (3) NY44E 11/5/2008	TDP21 (3) NY44F 11/5/2008	IT-HBE-1A-1 RL72A 09/03/2010	IT-HBE-1A(4.5-5.5) RL72C 09/03/2010
VOLATILES (µg/kg)															
Method SW8260C															
Chloromethane	1,600	1.2 U	1.4 U	1.3 U	1.6 U	1.2 U	1.2 U	1.4 U	1.2 U	1.1 U	1.2 U			0.9 U	1.0 U
Vinyl Chloride	7.4	1.2 U	1.4 U	1.3 U	1.6 U	1.2 U	1.2 U	1.4 U	**2.2**	**7.2**	**1.0** J1			0.9 U	1.0 U
Methylene Chloride	2,400	**1.7** J, J1	**1.7** J1	**2.1** J, J1	**3.7** J	**3.0**	**2.9**	**2.0** J, J1	**2.8** J	**3.1** J	**3.2** J			1.9 U	2.0 U
Acetone	510,000	26 UJ	**55** J	**33**	**26**	7.6 UJ	**7.4** UJ	25 U	9.3 U	20 U	21 U			**14** J	**22** J
Carbon Disulfide	75,000	1.2 UJ	1.4 U	1.3 U	1.6 U	1.2 U	1.2 U	1.4 U	1.2 U	**14**	**3.4**			**2.3**	1.0 U
1,1-Dichloroethane	710	1.2 UJ	1.4 U	1.3 UJ	1.6 UJ	1.2 U	1.2 U	**1.1** J, J1	1.2 UJ	1.1 UJ	1.2 UJ			0.9 U	1.0 U
trans-1,2-Dichloroethene	19,000	1.2 UJ	1.4 U	1.3 U	1.6 U	1.2 U	1.2 U	**3.1**	1.2 U	1.1 U	1.2 U			0.9 U	1.0 U
cis-1,2-Dichloroethene	2,600	1.2 UJ	1.4 U	1.3 U	1.6 U	1.2 U	1.2 U	**86**	**51**	**16**	**1.6**			0.9 U	1.0 U
2-Butanone	430,000	6.1 UJ	**4.3** J1	6.4 UJ	7.9 UJ	6.2 U	6.2 U	7.0 UJ	6.2 UJ	5.7 UJ	6.0 UJ			4.7 U	4.9 U
1,1,1-Trichloroethane	1,900,000	1.2 UJ	**1.9**	1.3 U	1.6 U	1.2 U	1.2 U	**0.7** J1	1.2 U	1.1 U	1.2 U			0.9 U	1.0 U
Trichloroethene	51	**1.3** J	**1.0** J1	1.3 U	1.6 U	**7.7**	**8.4**	**270**	**220**	**4.3**	**2.2**			0.9 U	1.0 U
Benzene	93	1.2 UJ	**1.1** J1	1.3 U	**0.9** J1	1.2 U	1.2 U	1.4 U	1.2 U	1.1 U	1.2 U			0.9 U	1.6
Tetrachloroethene	260	1.2 UJ	1.4 U	1.3 U	1.6 U	1.2 U	1.2 U	**2.5**	**2.6**	1.1 U	1.2 U			0.9 U	1.0 U
Toluene	100,000	1.2 UJ	1.4 U	1.3 U	1.6 U	1.2 U	1.2 U	**0.9** J1	1.2 U	**0.7** J1	1.2 U			0.9 U	1.0 U
Trichlorofluoromethane	200,000	1.2 U	1.4 U	1.3 U	1.6 U	1.2 U	1.2 U	1.4 U	1.2 U	1.1 U	1.2 U			0.9 U	1.0 U
m,p-Xylene	160,000	1.2 UJ	1.4 U	1.3 U	1.6 U	1.2 U	1.2 U	1.4 U	1.2 U	**0.9** J1	1.2 U			0.9 U	1.0 U
Methyl Iodide	---	1.2 UJ	1.4 U	1.3 U	1.6 U	1.2 U	1.2 U	1.4 U	1.2 U	1.1 U	1.2 U			0.9 U	1.0 U
1,2,4-Trimethylbenzene	800,000	1.2 UJ	1.4 U	1.3 U	1.6 U	1.2 U	1.2 U	1.4 U	1.2 U	1.1 U	1.2 U			0.9 U	1.0 U
sec-Butylbenzene	---	1.2 UJ	1.4 U	1.3 U	1.6 U	1.2 U	1.2 U	1.4 U	1.2 U	**0.8** J1	1.2 U			0.9 U	1.0 U
SEMIVOLATILES (µg/kg)															
Method SW8270D															
Phenol	1,900,000	19 U	18 U	18 U	19 U	18 U	19 U	18 U	20 U	19 U	19 U				
Benzyl Alcohol	8,000,000	19 U	18 U	18 U	19 U	18 U	19 U	18 U	20 U	19 U	19 U				
4-Methylphenol	41,000	38 U	36 U	37 U	38 U	36 U	37 U	37 U	40 U	38 U	37 U				
Benzoic Acid	9,000	380 UJ	360 UJ	370 U	380 U	360 UJ	370 UJ	370 U	400 U	380 U	370 U				
Naphthalene	2,100	19 U	**29**	18 U	19 U	18 U	19 U	**85**	20 U	19 U	19 U				
2-Methylnaphthalene	320,000	19 U	**14** J1	18 U	19 U	18 U	19 U	**18** J1	20 U	19 U	19 U				
Acenaphthene	230,000	19 U	18 U	18 U	19 U	18 U	19 U	18 U	20 U	19 U	**16** J1				
Dibenzofuran	80,000	19 U	**11** J1	18 U	19 U	18 U	19 U	**13** J1	20 U	19 U	19 U				
Fluorene	150,000	19 U	18 U	18 U	19 U	18 U	19 U	18 U	20 U	19 U	19 U				
Phenanthrene	---	**66**	**55**	**75**	19 U	18 U	19 U	**66**	20 U	19 U	**22**				
Anthracene	1,600,000	19 U	18 U	**11** J1	19 U	18 U	19 U	18 U	20 U	19 U	19 U				
Fluoranthene	230,000	19 U	**49**	**110**	19 U	18 U	19 U	**59**	20 U	19 U	19 U				
Pyrene	240,000	19 U	**61**	**120**	19 U	18 U	19 U	**49**	20 U	19 U	19 U				
Butylbenzylphthalate	1,700	19 U	**56**	**47**	19 U	18 U	19 U	**19**	20 U	19 U	19 U				
Benzo(a)anthracene	---	19 U	**21**	**48**	19 U	18 U	19 U	18 U	20 U	19 U	19 U				
bis(2-Ethylhexyl)phthalate	56,600	24 U	34 U	**91**	**24**	23 U	23 U	**24**	25 U	**17** J1	**14** J1				
Chrysene	---	19 U	**41**	**59**	19 U	18 U	19 U	**23**	20 U	19 U	19 U				
Benzo(a)pyrene	---	19 U	**24**	**47**	19 U	18 U	19 U	**12** J1	20 U	19 U	19 U				
Indeno(1,2,3-cd)pyrene	---	19 U	**20**	**25**	19 U	18 U	19 U	**13** J1	20 U	19 U	19 U				
Dibenz(a,h)anthracene	---	19 U	18 U	18 U	19 U	18 U	19 U	18 U	20 U	19 U	19 U				
Benzo(g,h,i)perylene	---	19 U	**25**	**31**	19 U	18 U	19 U	**23**	20 U	19 U	19 U				
1-Methylnaphthalene	16,000	19 U	**11** J1	18 U	19 U	18 U	19 U	**9.2** J1	20 U	19 U	19 U				
Total Benzofluoranthenes	---	19 U	**49**	**72**	19 U	18 U	19 U	**30**	20 U	19 U	19 U				
cPAH TEQ	15	ND	**33**	**62**	ND	ND	ND	**17** J	ND	ND	ND				

TABLE Q-6
SOIL ANALYTICAL DETECTS
SOUTH OF FORMER SLIP 5 AREA
BOEING ISAACSON-THOMPSON
REMEDIAL INVESTIGATION

		Southern Property Boundary/Former Washdown System Collection Sumps										Eastern Property Boundary			
	Preliminary Cleanup Levels	IT-MW-5(2-3.5) TU90A 11/01/2011	IT-MW-5(5-6.5) TU90B 11/01/2011	IT-MW-5(8-9) TV16A 11/02/2011	IT-MW-5(14-15.5) TV16B 11/02/2011	IT-MW-6(2-3.5) TU90C 11/01/2011	IT-MW-6(5-6.5) TU90D 11/01/2011	IT-MW-6(8-9.5) TV16C 11/02/2011	IT-MW-6(14-15.5) TV16D 11/02/2011	IT-MW-6(20-21.5) TV16E 11/02/2011	IT-MW-6(23-24.5) TV16F 11/02/2011	TDP20 (3) NY44E 11/5/2008	TDP21 (3) NY44F 11/5/2008	IT-HBE-1A-1 RL72A 09/03/2010	IT-HBE-1A(4.5-5.5) RL72C 09/03/2010
PAHs (µg/kg)															
Method SW8270D-SIM															
Naphthalene	2,100	**4.4** J1	**30**	**4.0** J1	4.7 U	4.6 U	**20**	**49**	4.9 U	**2.6** J1	4.8 U				
2-Methylnaphthalene	320,000	**5.0**	**13**	**4.5** J1	4.7 U	4.6 U	**9.4**	**12**	4.9 U	**3.0** J1	4.8 U				
1-Methylnaphthalene	16,000	**5.1**	**13**	**2.9** J1	4.7 U	4.6 U	**11**	**9.9**	4.9 U	4.8 U	4.8 U				
Total Naphthalenes	---	**14.5** J1	**56**	**11.4** J1	4.7 U	4.6 U	**40.4**	**70.9**	4.9 U	**5.6** J1	4.8 U				
Acenaphthene	230,000	4.9 U	**14**	**3.2** J1	4.7 U	4.6 U	**11**	**2.4** J1	4.9 U	**3.9** J1	**20**				
Fluorene	150,000	4.9 U	**18**	**2.3** J1	4.7 U	4.6 U	**13**	4.8 U	4.9 U	**3.5** J1	4.8 U				
Phenanthrene	---	**8.7**	**260**	**17**	**3.8** J1	**2.5** J1	**180**	**53**	4.9 U	**11**	**26**				
Anthracene	1,600,000	4.9 U	**35**	**3.2** J1	4.7 U	4.6 U	**27**	4.8 U	4.9 U	**3.7** J1	4.8 U				
Fluoranthene	230,000	**5.9**	**360**	**19**	4.7 U	**2.4** J1	**240**	**49**	4.9 U	4.8 U	4.8 U				
Pyrene	240,000	**6.2**	**330**	**19**	4.7 U	4.6 U	**220**	**38**	4.9 U	4.8 U	4.8 U				
Benzo(a)anthracene	---	**3.4** J1	**130**	**9.1**	4.7 U	4.6 U	**92**	**7.2**	4.9 U	4.8 U	4.8 U				
Chrysene	---	**5.9**	**140**	**18**	4.7 U	4.6 U	**96**	**18**	4.9 U	4.8 U	4.8 U				
Benzo(a)pyrene	---	4.9 U	**150**	**13**	4.7 U	4.6 U	**99**	**10**	4.9 U	4.8 U	4.8 U				
Indeno(1,2,3-cd)pyrene	---	**5.6**	**78**	**7.0**	4.7 U	4.6 U	**52**	**8.3**	4.9 U	4.8 U	4.8 U				
Dibenz(a,h)anthracene	---	**4.1** J1	**26**	**4.2** J1	4.7 U	4.6 U	**17**	**3.2** J1	4.9 U	4.8 U	4.8 U				
Benzo(g,h,i)perylene	---	**8.5**	**90**	**9.4**	4.7 U	4.6 U	**56**	**14**	4.9 U	4.8 U	4.8 U				
Dibenzofuran	80,000	**2.7** J1	**13**	4.6 U	4.7 U	4.6 U	**9.1**	**9.4**	4.9 U	4.8 U	4.8 U				
Total Benzofluoranthenes	---	4.9 U	**210**	**23**	4.7 U	4.6 U	**140**	**26**	4.9 U	4.8 U	4.8 U				
cPAH TEQ	15	**1.4** J	**196**	**18** J	ND	ND	**130**	**15** J	ND	ND	ND				
PCBs (µg/kg)															
Method SW8082															
Aroclor 1254	0.29	30 U	32 U	**49**	33 U	32 U	30 U	**16** J1	32 U	31 U	31 U	32 U	31 U	32 U	32 U
Aroclor 1260	5.4	30 U	32 U	32 U	33 U	32 U	30 U	32 U	32 U	31 U	31 U	32 U	31 U	32 U	32 U
Total PCBs	1.8	ND	ND	**49**	ND	ND	ND	**16** J	ND	ND	ND	ND	ND	ND	ND
TOTAL PETROLEUM HYDROCARBONS (mg/kg)															
NWTPH-HCID															
Diesel-Range Organics	---											50 U	50 U		
Gasoline-Range Organics	---											20 U	20 U		
Lube Oil	---											100 U	100 U		
NWTPH-Dx															
Diesel-Range Organics	2,000	**99** J	**17**	**18**	6.6 U	5.0 U	5.2 U	**14**	6.4 U	**12**	6.2 U				
Oil-Range Organics	2,000	**22**	**42**	**77**	13 U	10 U	10 U	**56**	13 U	**46**	12 U				
NWTPH-G															
Gasoline-Range Organics	100/30	6.9 U	8.4 U	8.6 U	8.5 U	6.6 U	6.4 U	8.3 U	7.8 U	**12**	7.8 U				

TABLE Q-6
SOIL ANALYTICAL DETECTS
SOUTH OF FORMER SLIP 5 AREA
BOEING ISAACSON-THOMPSON
REMEDIAL INVESTIGATION

		Southern Property Boundary/Former Washdown System Collection Sumps										Eastern Property Boundary			
	Preliminary Cleanup Levels	IT-MW-5(2-3.5) TU90A 11/01/2011	IT-MW-5(5-6.5) TU90B 11/01/2011	IT-MW-5(8-9) TV16A 11/02/2011	IT-MW-5(14-15.5) TV16B 11/02/2011	IT-MW-6(2-3.5) TU90C 11/01/2011	IT-MW-6(5-6.5) TU90D 11/01/2011	IT-MW-6(8-9.5) TV16C 11/02/2011	IT-MW-6(14-15.5) TV16D 11/02/2011	IT-MW-6(20-21.5) TV16E 11/02/2011	IT-MW-6(23-24.5) TV16F 11/02/2011	TDP20 (3) NY44E 11/5/2008	TDP21 (3) NY44F 11/5/2008	IT-HBE-1A-1 RL72A 09/03/2010	IT-HBE-1A(4.5-5.5) RL72C 09/03/2010
TOTAL METALS (mg/kg)															
Methods 200.8/7471A/SW7196A															
Barium	640	**82.1** J	**75.5**	**60.8**	**57.2**	**37.8**	**36.0**	**76.3**	**41.6**	**22.4**	**23.4**				
Beryllium	160	**0.3**	**0.3**	**0.3**	0.3 U	0.2 U	**0.2**	**0.4**	0.3 U	0.3 U	0.2 U				
Cadmium	1.3	**0.1**	**0.3**	**0.1**	0.1 U	0.1 U	0.1 U	**0.2**	0.1 U	0.1 U	0.1 U	0.3 U	**0.3**	0.5 U	**0.3**
Chromium	1,480	**13.7**	**16.1**	**17.2**	**14.1**	**18.6**	**22.9**	**22.5**	**14.6**	**9.2**	**10.9**	**14.5**	**15.1**	**30**	**19.1**
Chromium VI	3.8	0.480 UJ	0.501 U	0.493 U	0.539 U	0.408 U	0.403 U	0.514 U	0.532 U	0.511 U	0.491 U				
Copper	36	**24.7**	**29.4**	**26.4**	**21.5**	**11.0**	**11.6**	**34.0**	**18.8**	**11.4**	**9.7**		**13.3**	**35.7**	**19.1**
Lead	250	**5.8**	**30.7**	**28.6** J	**2.8**	**1.6**	**1.6**	**30.4**	**2.3**	**1.1**	**1.1**	**3**	2 U	5 U	**14**
Mercury	1.5	**0.04**	**0.12**	**0.03**	**0.03**	0.02 U	0.02 U	**0.04**	0.03 U	0.02 U	0.03 U	0.05 U	0.05 U	0.02 U	**0.03**
Nickel	210	**14.4**	**16.9**	**40.8** J	**10.8**	**28.9**	**29.2**	**23.1**	**9.8**	**7.9**	**7.7**				
Zinc	1,400	**44**	**65**	**60**	**31**	**27**	**27**	**72**	**25**	**20**	**22**			**49**	**39**
CONVENTIONALS (mg/kg)															
Oil and Grease	---														

TABLE Q-6
SOIL ANALYTICAL DETECTS
SOUTH OF FORMER SLIP 5 AREA
BOEING ISAACSON-THOMPSON
REMEDIAL INVESTIGATION

		Eastern Property Boundary										
	Preliminary Cleanup Levels	IT-HBE-2-1 RL63B 09/02/2010	IT-HBE-2(4.0-4.5) RL87A 09/07/2010	IT-HBE-3-1 RL72B 09/03/2010	IT-HBE-3(4.5-5.5) RL87B 09/07/2010	IT-HBE-SS1 RL72D 09/03/2010	IT-EXT1(0-1) RM87A 09/15/2010	IT-EXT1(4-5) RM87B 09/15/2010	IT-EXT2(0-1) RM87C 09/15/2010	IT-EXT2(3-4) RM87D 09/15/2010	IT-EXT3(0-1) RM87E 09/15/2010	IT-EXT3(3-4) RM87F 09/15/2010
VOLATILES (µg/kg)												
Method SW8260C												
Chloromethane	1,600	1.2 U	1.2 U	1.0 U	1.3 U	1.1 U	0.7 U	0.6 U	0.4 U	0.5 U	0.5 U	0.5 U
Vinyl Chloride	7.4	1.2 U	1.2 U	1.0 U	1.3 U	1.1 U	0.7 U	0.6 U	0.4 U	0.5 U	0.5 U	0.5 U
Methylene Chloride	2,400	2.4 U	2.4 U	2.1 U	2.6 U	2.1 U	1.4 U	1.8 U	0.9 U	1.0 U	1.0 U	1.1 U
Acetone	510,000	**16**	**75**	**14** J	**14**	**110** J	**11**	**8.4**	**32**	**24**	**18**	**17**
Carbon Disulfide	75,000	1.2 U	**2.5**	1.0 U	1.3 U	1.1 U	0.7 U	0.6 U	0.4 U	0.5 U	0.5 U	0.5 U
1,1-Dichloroethane	710	1.2 U	1.2 U	1.0 U	1.3 U	1.1 U	0.7 U	0.6 U	0.4 U	0.5 U	0.5 U	0.5 U
trans-1,2-Dichloroethene	19,000	1.2 U	1.2 U	1.0 U	1.3 U	1.1 U	0.7 U	0.6 U	0.4 U	0.5 U	0.5 U	0.5 U
cis-1,2-Dichloroethene	2,600	1.2 U	1.2 U	1.0 U	1.3 U	1.1 U	0.7 U	0.6 U	0.4 U	0.5 U	0.5 U	0.5 U
2-Butanone	430,000	5.9 U	**24**	5.2 U	6.6 U	**11**	3.5 U	2.9 U	**3.7** J	**3.4** J	2.5 U	2.7 U
1,1,1-Trichloroethane	1,900,000	1.2 U	1.2 U	1.0 U	1.3 U	1.1 U	0.7 U	0.6 U	0.4 U	0.5 U	0.5 U	0.5 U
Trichloroethene	51	1.2 U	1.2 U	1.0 U	1.3 U	1.1 U	0.7 U	0.6 U	0.4 U	0.5 U	0.5 U	0.5 U
Benzene	93	1.2 U	**2.2**	1.0 U	1.3 U	1.1 U	0.7 U	0.6 U	0.4 U	0.5 U	**0.6**	0.5 U
Tetrachloroethene	260	1.2 U	1.2 U	1.0 U	1.3 U	1.1 U	0.7 UJ	0.6 UJ	0.4 UJ	0.5 U	0.5 UJ	0.5 UJ
Toluene	100,000	1.2 U	1.2 U	1.0 U	1.3 U	1.1 U	0.7 U	0.6 U	0.4 U	0.5 U	0.5 U	0.5 U
Trichlorofluoromethane	200,000	1.2 U	1.2 U	1.0 U	1.3 U	1.1 U	0.7 U	0.6 U	0.4 U	0.5 U	0.5 U	0.5 U
m,p-Xylene	160,000	1.2 U	1.2 U	1.0 U	1.3 U	1.1 U	0.7 U	0.6 U	0.4 U	0.5 U	0.5 U	0.5 U
Methyl Iodide	---	1.2 U	1.2 U	1.0 U	1.3 U	1.1 U	0.7 U	0.6 U	0.4 U	0.5 U	0.5 U	0.5 U
1,2,4-Trimethylbenzene	800,000	1.2 U	1.2 U	1.0 U	1.3 U	1.1 U	0.7 U	0.6 U	0.4 U	0.5 U	0.5 U	0.5 U
sec-Butylbenzene	---	1.2 U	1.2 U	1.0 U	1.3 U	1.1 U	0.7 U	0.6 U	0.4 U	0.5 U	0.5 U	0.5 U
SEMIVOLATILES (µg/kg)												
Method SW8270D												
Phenol	1,900,000											
Benzyl Alcohol	8,000,000											
4-Methylphenol	41,000											
Benzoic Acid	9,000											
Naphthalene	2,100											
2-Methylnaphthalene	320,000											
Acenaphthene	230,000											
Dibenzofuran	80,000											
Fluorene	150,000											
Phenanthrene	---											
Anthracene	1,600,000											
Fluoranthene	230,000											
Pyrene	240,000											
Butylbenzylphthalate	1,700											
Benzo(a)anthracene	---											
bis(2-Ethylhexyl)phthalate	56,600											
Chrysene	---											
Benzo(a)pyrene	---											
Indeno(1,2,3-cd)pyrene	---											
Dibenz(a,h)anthracene	---											
Benzo(g,h,i)perylene	---											
1-Methylnaphthalene	16,000											
Total Benzofluoranthenes	---											
cPAH TEQ	15											

TABLE Q-6
SOIL ANALYTICAL DETECTS
SOUTH OF FORMER SLIP 5 AREA
BOEING ISAACSON-THOMPSON
REMEDIAL INVESTIGATION

		Eastern Property Boundary										
	Preliminary Cleanup Levels	IT-HBE-2-1 RL63B 09/02/2010	IT-HBE-2(4.0-4.5) RL87A 09/07/2010	IT-HBE-3-1 RL72B 09/03/2010	IT-HBE-3(4.5-5.5) RL87B 09/07/2010	IT-HBE-SS1 RL72D 09/03/2010	IT-EXT1(0-1) RM87A 09/15/2010	IT-EXT1(4-5) RM87B 09/15/2010	IT-EXT2(0-1) RM87C 09/15/2010	IT-EXT2(3-4) RM87D 09/15/2010	IT-EXT3(0-1) RM87E 09/15/2010	IT-EXT3(3-4) RM87F 09/15/2010
PAHs (µg/kg)												
Method SW8270D-SIM												
Naphthalene	2,100											
2-Methylnaphthalene	320,000											
1-Methylnaphthalene	16,000											
Total Naphthalenes	---											
Acenaphthene	230,000											
Fluorene	150,000											
Phenanthrene	---											
Anthracene	1,600,000											
Fluoranthene	230,000											
Pyrene	240,000											
Benzo(a)anthracene	---											
Chrysene	---											
Benzo(a)pyrene	---											
Indeno(1,2,3-cd)pyrene	---											
Dibenz(a,h)anthracene	---											
Benzo(g,h,i)perylene	---											
Dibenzofuran	80,000											
Total Benzofluoranthenes	---											
cPAH TEQ	15											
PCBs (µg/kg)												
Method SW8082												
Aroclor 1254	0.29	33 U	32 U	31 U	32 U	31 U	30 U	32 U	32 U	32 U	31 U	32 U
Aroclor 1260	5.4	33 U	32 U	31 U	32 U	31 U	30 U	32 U	32 U	32 U	31 U	32 U
Total PCBs	1.8	ND	ND	ND	ND	ND	ND	ND	ND	ND	ND	ND
TOTAL PETROLEUM HYDROCARBONS (mg/kg)												
NWTPH-HCID												
Diesel-Range Organics	---											
Gasoline-Range Organics	---											
Lube Oil	---											
NWTPH-Dx												
Diesel-Range Organics	2,000											
Oil-Range Organics	2,000											
NWTPH-G												
Gasoline-Range Organics	100/30											

TABLE Q-6
SOIL ANALYTICAL DETECTS
SOUTH OF FORMER SLIP 5 AREA
BOEING ISAACSON-THOMPSON
REMEDIAL INVESTIGATION

		Eastern Property Boundary										
	Preliminary Cleanup Levels	IT-HBE-2-1 RL63B 09/02/2010	IT-HBE-2(4.0-4.5) RL87A 09/07/2010	IT-HBE-3-1 RL72B 09/03/2010	IT-HBE-3(4.5-5.5) RL87B 09/07/2010	IT-HBE-SS1 RL72D 09/03/2010	IT-EXT1(0-1) RM87A 09/15/2010	IT-EXT1(4-5) RM87B 09/15/2010	IT-EXT2(0-1) RM87C 09/15/2010	IT-EXT2(3-4) RM87D 09/15/2010	IT-EXT3(0-1) RM87E 09/15/2010	IT-EXT3(3-4) RM87F 09/15/2010
TOTAL METALS (mg/kg)												
Methods 200.8/7471A/SW7196A												
Barium	640											
Beryllium	160											
Cadmium	1.3	**0.4**	**0.4**	**0.3**	**0.3**	**0.5**	**0.3**	**0.3**	**1.2**	**0.8**	**0.4**	**0.3**
Chromium	1,480	**15.5**	**14.6**	**18.5**	**14.1**	**25.7**	**14.2**	**11.0**	**25.4**	**37.8**	**14.8**	**14.3**
Chromium VI	3.8											
Copper	36	**12.6**	**15.3**	**13.8**	**21.8**	**44.0**	**15.2**	**11.2**	**61.4**	**52.7**	**20.1**	**41.1**
Lead	250	**4**	**4**	**12**	**4**	**14**	**5**	**3**	**9**	**23**	**10**	**19**
Mercury	1.5	**0.06**	**0.04**	0.03 U	**0.04**	**0.14**	**0.03**	0.02 U	0.03 U	**0.02**	**0.08**	**0.08**
Nickel	210											
Zinc	1,400	**37**	**36**	**43**	**29**	**159**	**36**	**32**	**633**	**396**	**47**	**38**
CONVENTIONALS (mg/kg)												
Oil and Grease	---											

TABLE Q-6
SOIL ANALYTICAL DETECTS
SOUTH OF FORMER SLIP 5 AREA
BOEING ISAACSON-THOMPSON
REMEDIAL INVESTIGATION

	Preliminary Cleanup Levels	Eastern Property Boundary												
		IT-Bldg-14-11Exc1-B(2.1) TG02B 7/28/2011	IT-Bldg-14-11Exc2-B(2.5) TG02C 7/28/2011	IT-Bldg-14-11Exc3-B(3.0) TG02D 7/28/2011	IT-Bldg-14-11Exc4-B(2.4) TG02E 7/28/2011	IT-BLDG14-11-SURF TJ06B 8/18/2011	IT-BUILDING14-11EXC5-B(.5) TJ06A 8/18/2011	IT-PIVExc2-B(5.0) TH74A 8/9/2011	IT-PIVExc2-SW(2.5) TH74B 8/9/2011	IT-TowpathExc13-(1.3) TG72A 8/2/2011	IT-MW-4(2-3.5) TW27F 11/08/2011	IT-MW-4(5-6.5) TW27G 11/08/2011	IT-MW-4(8-9.5) TW27H 11/08/2011	IT-MW-4(13.5-15) TW27I 11/08/2011
VOLATILES (µg/kg)														
Method SW8260C														
Chloromethane	1,600	1.2 U	1.2 U	1.2 U	0.9 U	0.9 U	1 U	1.2 U	1.2 U	1 U	1.3 U	1.3 U	1.1 U	1.2 U
Vinyl Chloride	7.4	1.2 U	1.2 U	1.2 U	0.9 U	0.9 U	1 U	1.2 U	1.2 U	1 U	1.3 U	1.3 U	1.1 U	1.2 U
Methylene Chloride	2,400	2.5 U	2.3 U	**6**	1.9 U	1.8 U	1.9 U	2.3 U	2.4 U	2 U	**4.7**	**4.7**	**2.6**	**3.0**
Acetone	510,000	**47**	**270**	**67**	**25**	**19**	**18**	**47**	**31**	**65**	**11** J	**25** J	**11** J	**27** J
Carbon Disulfide	75,000	**1.4**	**1.8**	1.2 U	0.9 U	**1.7**	**2.9**	**3.3**	1.2 U	**4.4**	1.3 U	1.3 U	**0.7** J1	1.2 U
1,1-Dichloroethane	710	1.2 U	1.2 U	1.2 U	0.9 U	0.9 U	1 U	1.2 U	1.2 U	1 U	1.3 UJ	1.3 UJ	1.1 UJ	1.2 UJ
trans-1,2-Dichloroethene	19,000	1.2 U	1.2 U	1.2 U	0.9 U	0.9 U	1 U	1.2 U	1.2 U	1 U	1.3 U	1.3 U	1.1 U	1.2 U
cis-1,2-Dichloroethene	2,600	1.2 U	1.2 U	1.2 U	0.9 U	0.9 U	1 U	1.2 U	1.2 U	1 U	1.3 U	1.3 U	1.1 U	1.2 U
2-Butanone	430,000	**20**	**65**	**55**	4.7 U	4.4 U	4.8 U	**8.9**	5.9 U	**10**	6.3 U	6.6 U	5.6 U	5.8 U
1,1,1-Trichloroethane	1,900,000	1.2 U	1.2 U	1.2 U	0.9 U	0.9 U	1 U	1.2 U	1.2 U	1 U	1.3 U	1.3 U	1.1 U	1.2 U
Trichloroethene	51	1.2 U	1.2 U	1.2 U	0.9 U	0.9 U	1 U	1.2 U	1.2 U	1 U	1.3 U	1.3 U	1.1 U	1.2 U
Benzene	93	**2.6**	**1.8**	1.2 U	**1.3**	**0.5** J	**0.5** J	1.2 U	1.2 U	**1.7**	1.3 U	1.3 U	1.1 U	1.2 U
Tetrachloroethene	260	1.2 U	1.2 U	1.2 U	0.9 U	0.9 U	1 U	1.2 U	1.2 U	1 U	1.3 U	1.3 U	1.1 U	1.2 U
Toluene	100,000	1.2 U	1.2 U	1.2 U	0.9 U	0.9 U	1 U	1.2 U	1.2 U	1 U	1.3 U	1.3 U	1.1 U	1.2 U
Trichlorofluoromethane	200,000	1.2 U	1.2 U	1.2 U	**2.8**	0.9 U	1 U	1.2 U	1.2 U	1 U	1.3 U	1.3 U	1.1 U	1.2 U
m,p-Xylene	160,000	1.2 U	1.2 U	1.2 U	0.9 U	0.9 U	1 U	1.2 U	1.2 U	1 U	1.3 U	1.3 U	1.1 U	1.2 U
Methyl Iodide	---	1.2 U	1.2 U	1.2 U	0.9 U	0.9 U	1 U	1.2 U	1.2 U	1 U	1.3 U	1.3 U	1.1 U	1.2 U
1,2,4-Trimethylbenzene	800,000	1.2 U	1.2 U	1.2 U	0.9 U	0.9 U	1 U	1.2 U	1.2 U	1 U	1.3 U	1.3 U	1.1 U	1.2 U
sec-Butylbenzene	---	1.2 U	1.2 U	1.2 U	0.9 U	0.9 U	1 U	1.2 U	1.2 U	1 U	1.3 U	1.3 U	1.1 U	1.2 U
SEMIVOLATILES (µg/kg)														
Method SW8270D														
Phenol	1,900,000	20 U	**9.4** J	57 U	18 U	19 U	19 U	18 U	19 U	19 U	19 U	20 U	20 U	19 U
Benzyl Alcohol	8,000,000	20 U	**25**	57 U	18 U	19 U	19 U	18 U	19 U	19 UJ	19 U	20 U	20 U	19 U
4-Methylphenol	41,000	39 U	38 U	110 U	37 U	39 U	38 U	37 U	38 U	37 U	38 U	39 U	39 U	38 U
Benzoic Acid	9,000	**100** J	**140** J	1100 U	370 U	390 U	380 U	370 U	380 U	370 U	380 U	390 U	390 U	380 U
Naphthalene	2,100	**37**	**68**	57 U	18 U	19 U	19 U	**40**	**16** J	**32**	19 U	20 U	20 U	19 U
2-Methylnaphthalene	320,000	**21**	**34**	57 U	18 U	19 U	**18** J	**16** J	19 U	**13** J	19 U	20 U	20 U	19 U
Acenaphthene	230,000	**16** J	**19**	57 U	18 U	19 U	19 U	18 U	19 U	**14** J	19 U	20 U	20 U	19 U
Dibenzofuran	80,000	**30**	**26**	57 U	18 U	19 U	19 U	**13** J	19 U	**14** J	19 U	20 U	20 U	19 U
Fluorene	150,000	**39**	**32**	57 U	18 U	19 U	19 U	**10** J	19 U	**24**	19 U	20 U	20 U	19 U
Phenanthrene	---	**130**	**150**	**46** J	**15** J	**42**	**16** J	**56**	**23**	**30**	19 U	**51**	**14** J1	19 U
Anthracene	1,600,000	**44**	**32**	57 U	18 U	**13** J	19 U	**11** J	19 U	**13** J	19 U	**11** J1	20 U	19 U
Fluoranthene	230,000	**92**	**120**	**28** J	**16** J	**240**	**10** J	**53**	**22**	**56**	19 U	**77**	20 U	19 U
Pyrene	240,000	**81**	**94**	**28** J	**13** J	**240**	**10** J	**36**	**16** J	**39**	19 U	**58**	**15** J1	19 U
Butylbenzylphthalate	1,700	20 U	19 U	57 U	18 U	**40**	19 U	18 U	19 U	19 U	**9.5** J1	20 U	20 U	19 U
Benzo(a)anthracene	---	**26**	**26**	57 U	18 U	**180**	19 U	**13** J	19 U	**16** J	19 U	**39**	20 U	19 U
bis(2-Ethylhexyl)phthalate	56,600	**28**	**18** J	**54** J	**40**	**67**	23 U	23 U	23 U	23 U	**15** J1	24 U	**590**	**33**
Chrysene	---	**42**	**38**	57 U	**12** J	**180**	19 U	**24**	**11** J	**24**	19 U	**39**	**25**	19 U
Benzo(a)pyrene	---	**17** J	**13** J	57 U	18 U	**200**	19 U	**10** J	19 U	**9.4** J	19 U	**35**	**13** J1	19 U
Indeno(1,2,3-cd)pyrene	---	**13** J	19 U	57 U	18 U	**120**	19 U	**12** J	19 U	19 U	19 U	**18** J1	20 U	19 U
Dibenz(a,h)anthracene	---	20 U	19 U	57 U	18 U	**52**	19 U	18 U	19 U	19 U	19 U	20 U	20 U	19 U
Benzo(g,h,i)perylene	---	**23**	**14** J	57 U	18 U	**130**	19 U	**17** J	19 U	**12** J	19 U	**20**	20 U	19 U
1-Methylnaphthalene	16,000	**34**	**18** J	**28** J	18 U	19 U	**12** J	**10** J	19 U	**11** J	19 U	20 U	20 U	19 U
Total Benzofluoranthenes	---	**50**	**42**	57 U	**22**	**370**	**12** J	**32**	**16** J	**25**	19 U	**64**	**14** J1	19 U
cPAH TEQ	15	**26.32** J	**20.18** J	ND	**2.32** J	**274**	**1.2** J	**15.94** J	**1.71** J	**13.74** J	ND	**47** J	**15** J	ND

TABLE Q-6
SOIL ANALYTICAL DETECTS
SOUTH OF FORMER SLIP 5 AREA
BOEING ISAACSON-THOMPSON
REMEDIAL INVESTIGATION

	Preliminary Cleanup Levels	Eastern Property Boundary												
		IT-Bldg-14-11Exc1-B(2.1) TG02B 7/28/2011	IT-Bldg-14-11Exc2-B(2.5) TG02C 7/28/2011	IT-Bldg-14-11Exc3-B(3.0) TG02D 7/28/2011	IT-Bldg-14-11Exc4-B(2.4) TG02E 7/28/2011	IT-BLDG14-11-SURF TJ06B 8/18/2011	IT-BUILDING14-11EXC5-B(.5) TJ06A 8/18/2011	IT-PIVExc2-B(5.0) TH74A 8/9/2011	IT-PIVExc2-SW(2.5) TH74B 8/9/2011	IT-TowpathExc13-(1.3) TG72A 8/2/2011	IT-MW-4(2-3.5) TW27F 11/08/2011	IT-MW-4(5-6.5) TW27G 11/08/2011	IT-MW-4(8-9.5) TW27H 11/08/2011	IT-MW-4(13.5-15) TW27I 11/08/2011
PAHs (µg/kg)														
Method SW8270D-SIM														
Naphthalene	2,100	18 U	**34**	7.6 U	11 U	**6**	**12**	**16**	**6.4**	**6.1**	4.7 U	**4.7** J1	**4.5** J1	4.8 U
2-Methylnaphthalene	320,000	**11**	**27**	**13**	**3.6** J	**5.6**	**15**	**7.7**	**5.1**	**6.7**	4.7 U	**7.5**	**9.7**	4.8 U
1-Methylnaphthalene	16,000	**9.4**	**17**	**15**	**2.5** J	4.9 U	**13**	**5**	**3.7** J	**6.3**	4.7 U	**7.1**	**7.8**	4.8 U
Total Naphthalenes	---	**20.4**	**78**	**28**	**6.1** J	**11.6**	**40**	**28.7**	**15.2** J	**19.1**	4.7 U	**19.3** J1	**22** J1	4.8 U
Acenaphthene	230,000	**2.8** J	**11**	4.6 U	4.6 U	4.9 U	4.7 U	**7.1**	4.7 U	**8.1**	4.7 U	4.9 U	4.9 U	4.8 U
Fluorene	150,000	4.9 U	**17**	**4.1** J	4.6 U	4.9 U	4.7 U	**8.5**	**3.2** J	**13**	4.7 U	4.9 U	4.9 U	4.8 U
Phenanthrene	---	**22**	**77**	**24**	**15**	**18**	**14**	**52**	**13**	**15**	**3.0** J1	**13**	**10**	4.8 U
Anthracene	1,600,000	**2.5** J	**17**	**2.8** J	4.6 U	4.9 U	4.7 U	**9.5**	4.7 U	**5.3**	4.7 U	4.9 U	4.9 U	4.8 U
Fluoranthene	230,000	**24**	**73**	**14**	**11**	**40**	**18**	**46**	**16**	**28**	**2.7** J1	**7.2**	**5.1**	4.8 U
Pyrene	240,000	**20**	**56**	**14**	**10**	**36**	**17**	**51**	**14**	**20**	**2.7** J1	**7.2**	**6.8**	4.8 U
Benzo(a)anthracene	---	**9**	**16**	**6**	**3.7** J	**28**	**11**	**23**	**5.3**	**6.7**	4.7 U	**3.0** J1	**5.8**	4.8 U
Chrysene	---	**19**	**24**	**16**	**8.4**	**34**	**13**	**43**	**10**	**14**	4.7 U	**6.6**	**19**	4.8 U
Benzo(a)pyrene	---	**12**	**11**	**8.1**	**4.8**	**31**	**8**	**24**	**5.5**	**7.9**	4.7 U	**3.6** J1	**7.5**	4.8 U
Indeno(1,2,3-cd)pyrene	---	**9.6**	**7.8**	**4.4** J	**3.4** J	**18**	**5.6**	**9.1**	**3.6** J	**3.9** J	4.7 U	4.9 U	4.9 U	4.8 U
Dibenz(a,h)anthracene	---	**3.5** J	**2.8** J	4.6 U	4.6 U	**6.7**	4.7 U	4.5 U	4.7 U	4.7 U	4.7 U	4.9 U	4.9 U	4.8 U
Benzo(g,h,i)perylene	---	**14**	**9.8**	**7.3**	**7.3**	**27**	**7.6**	**14**	**5.8**	**8.2**	4.7 U	**3.1** J1	**8.7**	4.8 U
Dibenzofuran	80,000	**6.3**	**17**	**8.6**	**2.7** J	4.9 U	**5.1**	**6.4**	**3.5** J	**7.2**	4.7 U	**3.2** J1	4.9 U	4.8 U
Total Benzofluoranthenes	---	**31**	**29**	**15**	**13**	**58**	**19**	**44**	**16**	**16**	4.7 U	**7.0**	**8.9**	4.8 U
cPAH TEQ	15	**17.5** J	**16.8** J	**10.8** J	**6.894** J	**42.41**	**11.69**	**32.04**	**8.09** J	**10.7** J	ND	**4.7** J	**9.2**	ND
PCBs (µg/kg)														
Method SW8082														
Aroclor 1254	0.29	**53**	31 U	33 U	31 U	31 U	32 U	32 U	32 U	32 U	32 U	31 U	30 U	32 U
Aroclor 1260	5.4	**73**	31 U	33 U	31 U	**14** J	32 U	32 U	32 U	32 U	32 U	31 U	30 U	32 U
Total PCBs	1.8	**126**	ND	ND	ND	**14** J	ND	ND	ND	ND	ND	ND	ND	ND
TOTAL PETROLEUM HYDROCARBONS (mg/kg)														
NWTPH-HCID														
Diesel-Range Organics	---													
Gasoline-Range Organics	---													
Lube Oil	---													
NWTPH-Dx														
Diesel-Range Organics	2,000	**21**	**9.4**	**11**	**12**	**10**	**10**	**11**	**15**	**27**	5.2 U	6.0 U	**23**	5.9 U
Oil-Range Organics	2,000	**50**	**18**	**48**	**25**	**74**	**24**	**33**	**45**	**150**	10 U	12 U	**120**	12 U
NWTPH-G														
Gasoline-Range Organics	100/30	6.6 U	6.3 U	6.8 U	5.9 U	5.3 U	5 U	6.4 U	5.9 U	5.7 U	6.8 U	8.5 U	**8.3**	6.6 U

TABLE Q-6
SOIL ANALYTICAL DETECTS
SOUTH OF FORMER SLIP 5 AREA
BOEING ISAACSON-THOMPSON
REMEDIAL INVESTIGATION

		Eastern Property Boundary												
	Preliminary Cleanup Levels	IT-Bldg-14-11Exc1-B(2.1) TG02B 7/28/2011	IT-Bldg-14-11Exc2-B(2.5) TG02C 7/28/2011	IT-Bldg-14-11Exc3-B(3.0) TG02D 7/28/2011	IT-Bldg-14-11Exc4-B(2.4) TG02E 7/28/2011	IT-BLDG14-11-SURF TJ06B 8/18/2011	IT-BUILDING14-11EXC5-B(.5) TJ06A 8/18/2011	IT-PIVExc2-B(5.0) TH74A 8/9/2011	IT-PIVExc2-SW(2.5) TH74B 8/9/2011	IT-TowpathExc13-(1.3) TG72A 8/2/2011	IT-MW-4(2-3.5) TW27F 11/08/2011	IT-MW-4(5-6.5) TW27G 11/08/2011	IT-MW-4(8-9.5) TW27H 11/08/2011	IT-MW-4(13.5-15) TW27I 11/08/2011
TOTAL METALS (mg/kg)														
Methods 200.8/7471A/SW7196A														
Barium	640	**63.7**	**57.6**	**51.4**	**45.2**	**57.1**	**60.8**	**60.1**	**55.9**	**53.6**	**57.5**	**49.0**	**48.0**	**18.0**
Beryllium	160	**0.2**	0.2 U	**0.2**	**0.2**	0.2 U	0.2 U	**0.2**	**0.2**	**0.3**	**0.2**	0.2 U	0.2 U	0.2 U
Cadmium	1.3	**0.5**	**0.2**	**0.3**	**0.1**	**0.3**	0.1 U	**0.4**	**0.2**	**0.1**	0.1 U	**0.2**	0.1 U	0.1 U
Chromium	1,480	**16.3**	**16.5**	**15.9**	**18.8**	**18.7**	**13.2**	**21.4**	**23.4**	**14.6**	**9.9**	**13.1**	**13.5**	**9.9**
Chromium VI	3.8	**1.44** J	0.444 U	0.454 U	**0.48**	**0.427**	0.411 U	0.443 U	0.443 U	0.445 U	0.402 U	0.481 U	0.466 U	0.481 U
Copper	36	**44.6**	**24.2**	**16.9**	**24.6**	**61.2**	**22.5**	**27.4**	**23.9**	**23.1**	**26.0**	**14.1**	**21.5**	**6.3**
Lead	250	**80.8**	**22.1**	**6.1**	**15.8**	**18.7**	**10.5**	**42.4**	**17**	**8.5**	**4.0**	**4.1**	**3.4**	**1.1**
Mercury	1.5	**0.05**	**0.03**	**0.03**	**0.02**	0.02 U	0.02 U	**0.03**	**0.03**	**0.03**	0.02 U	**0.04**	0.02 U	0.03 U
Nickel	210	**22.1**	**22.4**	**15.3**	**26.6**	**25.5**	**17.5**	**25.6**	**32.5**	**16.5**	**15.9**	**12.2**	**10.9**	**4.8**
Zinc	1,400	**147**	**51**	**340**	**46**	**299**	**44**	**68**	**50**	**39**	**38**	**42**	**33**	**20**
CONVENTIONALS (mg/kg)														
Oil and Grease	---													

TABLE Q-6
SOIL ANALYTICAL DETECTS
SOUTH OF FORMER SLIP 5 AREA
BOEING ISAACSON-THOMPSON
REMEDIAL INVESTIGATION

	Preliminary Cleanup Levels	Northern Portion of 14-01 Building											
		IT-BLDG1401-TRENCH-2N SU96A/SW32A 5/2/2011	IT-BLDG1401-TRENCH-2S SU96B/SW32B 5/2/2011	IT-BLDG1401-TRENCH-3N SV05A/SW32C 5/3/2011	IT-BLDG1401-TRENCH-3S SV05B/SW32D 5/3/2011	IT-BLDG1401-TRENCH-4N SW63A 5/12/2011	IT-BLDG1401-TRENCH-4S (a) SW63B 5/12/2011	IT-BLDG1401-TRENCH-5N (b) SW79A 5/13/2011	IT-BLDG1401-TRENCH-5S SW79B 5/13/2011	IT-Bldg1401-OuttakesExc-1 (3.5) SX84A 5/20/2011	IT-Bldg1401-OuttakesExc-2 (3.7) SX84B 5/20/2011	IT-Bldg1401-OuttakesExc-3 (2.9) SY11A 5/23/2011	IT-Bldg1401-OuttakesExc-4 (3.05) SY11B 5/23/2011
VOLATILES (µg/kg)													
Method SW8260C													
Chloromethane	1,600	0.9 U	1.2 U	1.1 U	1.1 U	1.3 U	1.2 U	1.3 U	1.2 U	1.1 U	1.1 U	1.3 U	1.2 U
Vinyl Chloride	7.4	0.9 U	1.2 U	1.1 U	1.1 U	1.3 U	1.2 U	1.3 U	1.2 U	1.1 U	1.1 U	1.3 U	1.2 U
Methylene Chloride	2,400	**9.0** J	**12** J	**11**	**9.5**	**12**	**13**	**13**	**12**	**9.4**	**9.1**	**7.7**	**18**
Acetone	510,000	**27**	**25**	**93**	**61**	**140**	**25**	**86**	**20**	**22**	**31**	**20**	**37**
Carbon Disulfide	75,000	0.9 U	1.2 U	**0.8** J	**1.5**	1.3 U	1.2 U	1.3 U	**3.0**	1.1 U	1.1 U	1.3 U	1.2 U
1,1-Dichloroethane	710	0.9 U	1.2 U	1.1 U	1.1 U	1.3 U	1.2 U	1.3 U	1.2 U	1.1 U	1.1 U	1.3 U	1.2 U
trans-1,2-Dichloroethene	19,000	0.9 U	1.2 U	1.1 U	1.1 U	1.3 U	1.2 U	1.3 U	1.2 U	1.1 U	1.1 U	1.3 U	1.2 U
cis-1,2-Dichloroethene	2,600	0.9 U	1.2 U	1.1 U	1.1 U	1.3 U	1.2 U	1.3 U	1.2 U	1.1 U	1.1 U	1.3 U	1.2 U
2-Butanone	430,000	4.5 U	6.2 U	**16**	**10**	**33**	6.0 U	**18**	6.0 U	5.5 U	5.4 U	6.4 U	5.9 U
1,1,1-Trichloroethane	1,900,000	0.9 U	1.2 U	1.1 U	1.1 U	1.3 U	1.2 U	1.3 U	1.2 U	1.1 U	1.1 U	1.3 U	1.2 U
Trichloroethene	51	0.9 U	1.2 U	1.1 U	1.1 U	1.3 U	1.2 U	1.3 U	1.2 U	1.1 U	1.1 U	1.3 U	1.2 U
Benzene	93	**0.5** J	1.2 U	**0.5** J	1.1 U	1.3 U	1.2 U	1.3 U	1.2 U	**0.9** J	1.1 U	1.3 U	**0.9** J
Tetrachloroethene	260	0.9 U	1.2 U	1.1 U	1.1 U	1.3 U	1.2 U	1.3 U	1.2 U	1.1 U	1.1 U	1.3 U	1.2 U
Toluene	100,000	0.9 U	1.2 U	1.1 U	1.1 U	1.3 U	1.2 U	1.3 U	1.2 U	1.1 U	1.1 U	1.3 U	**0.8** J
Trichlorofluoromethane	200,000	0.9 U	1.2 U	1.1 U	1.1 U	1.3 U	1.2 U	1.3 U	1.2 U	1.1 U	1.1 U	1.3 U	1.2 U
m,p-Xylene	160,000	0.9 U	1.2 U	1.1 U	1.1 U	1.3 U	1.2 U	1.3 U	1.2 U	1.1 U	**0.5** J	1.3 U	1.2 U
Methyl Iodide	---	0.9 U	1.2 U	1.1 U	1.1 U	1.3 U	1.2 U	1.3 U	1.2 U	1.1 U	1.1 U	1.3 U	1.2 U
1,2,4-Trimethylbenzene	800,000	0.9 U	1.2 U	1.1 U	1.1 U	1.3 U	1.2 U	1.3 U	1.2 U	1.1 U	1.1 U	1.3 U	1.2 U
sec-Butylbenzene	---	0.9 U	1.2 U	1.1 U	1.1 U	1.3 U	1.2 U	1.3 U	1.2 U	1.1 U	1.1 U	1.3 U	1.2 U
SEMIVOLATILES (µg/kg)													
Method SW8270D													
Phenol	1,900,000	18 U	18 U	19 U	18 U	19 UJ	18 UJ	19 U	18 U	20 U	58 U	18 U	19 U
Benzyl Alcohol	8,000,000	18 U	18 U	19 U	18 U	19 U	18 U	19 U	18 U	20 UJ	58 UJ	18 UJ	19 UJ
4-Methylphenol	41,000	18 U	18 U	19 U	**10** J	19 U	18 U	**22** J	18 U	20 U	58 U	18 U	19 U
Benzoic Acid	9,000	180 U	180 U	190 U	**43** J	190 UJ	180 UJ	**130** J	180 UJ	200 U	580 U	180 U	**190** U
Naphthalene	2,100	18 U	18 U	**23**	**130**	19 U	18 U	**41** J	18 U	20 U	58 U	18 U	19 U
2-Methylnaphthalene	320,000	18 U	18 U	**32**	**60**	19 U	18 U	**11** J	18 U	20 U	58 U	18 U	19 U
Acenaphthene	230,000	18 U	18 U	19 U	18 U	19 U	18 U	19 U	18 U	20 U	58 U	18 U	19 U
Dibenzofuran	80,000	18 U	18 U	**20**	**40**	19 U	18 U	**10** J	18 U	20 U	58 U	18 U	19 U
Fluorene	150,000	18 U	18 U	**9.4** J	**27**	19 U	18 U	19 U	18 U	20 U	58 U	18 U	19 U
Phenanthrene	---	**18** J	18 U	**41**	**67**	**26**	**15** J	**52** J	**10** J	**18** J	58 U	**9.1** J	**17** J
Anthracene	1,600,000	18 U	18 U	19 U	**10** J	19 U	18 U	19 U	18 U	20 U	58 U	18 U	19 U
Fluoranthene	230,000	**11** J	18 U	**31**	**40**	**26** J	**16** J	**48** J	18 UJ	**12** J	58 U	**10** J	**14** J
Pyrene	240,000	**11** J	18 U	**31**	**51**	**24**	**14** J	**49** J	18 U	**12** J	58 U	18 U	**10** J
Butylbenzylphthalate	1,700	18 U	18 U	19 U	18 U	19 U	18 U	19 U	18 U	20 U	58 U	18 U	**18** J
Benzo(a)anthracene	---	18 U	18 U	**17** J	**14** J	**10** J	18 U	19 U	18 U	20 U	58 U	18 U	19 U
bis(2-Ethylhexyl)phthalate	56,600	**9.2** J	18 U	**10** J	18 U	19 U	18 U	19 U	18 U	**11** J	58 U	**16** J	**20**
Chrysene	---	18 U	18 U	**21**	**29**	**12** J	**13** J	**21** J	18 U	20 U	58 U	18 U	19 U
Benzo(a)pyrene	---	18 UJ	18 UJ	**9.4** J	**9.6** J	19 U	18 U	**12** J	18 U	20 U	58 U	18 U	19 U
Indeno(1,2,3-cd)pyrene	---	18 U	18 U	**12** J	18 U	19 U	18 U	**12** J	18 U	20 U	58 U	18 U	19 U
Dibenz(a,h)anthracene	---	18 U	18 U	19 U	18 U	19 U	18 U	19 U	18 U	20 U	58 U	18 U	19 U
Benzo(g,h,i)perylene	---	18 U	18 U	**16** J	**12** J	19 U	18 U	**24** J	18 U	20 U	**29** J	18 U	19 U
1-Methylnaphthalene	16,000	18 U	18 U	**20**	**39**	19 U	18 U	19 U	18 U	20 U	58 U	18 U	19 U
Total Benzofluoranthenes	---	18 U	18 U	**30**	**19**	**16** J	**16** J	**25** J	18 U	**15** J	58 U	**13** J	**13** J
cPAH TEQ	15	ND	ND	**15.5** J	**13.2** J	**3** J	**2** J	**16** J	ND	**2** J	ND	**1** J	**1** J

TABLE Q-6
SOIL ANALYTICAL DETECTS
SOUTH OF FORMER SLIP 5 AREA
BOEING ISAACSON-THOMPSON
REMEDIAL INVESTIGATION

		Northern Portion of 14-01 Building											
	Preliminary Cleanup Levels	IT-BLDG1401-TRENCH-2N SU96A/SW32A 5/2/2011	IT-BLDG1401-TRENCH-2S SU96B/SW32B 5/2/2011	IT-BLDG1401-TRENCH-3N SV05A/SW32C 5/3/2011	IT-BLDG1401-TRENCH-3S SV05B/SW32D 5/3/2011	IT-BLDG1401-TRENCH-4N SW63A 5/12/2011	IT-BLDG1401-TRENCH-4S (a) SW63B 5/12/2011	IT-BLDG1401-TRENCH-5N (b) SW79A 5/13/2011	IT-BLDG1401-TRENCH-5S SW79B 5/13/2011	IT-Bldg1401-OuttakesExc-1 (3.5) SX84A 5/20/2011	IT-Bldg1401-OuttakesExc-2 (3.7) SX84B 5/20/2011	IT-Bldg1401-OuttakesExc-3 (2.9) SY11A 5/23/2011	IT-Bldg1401-OuttakesExc-4 (3.05) SY11B 5/23/2011
PAHs (µg/kg)													
Method SW8270D-SIM													
Naphthalene	2,100	**5.4**	4.6 U	**16**	**37**	**15**	**7.0**	**14**	4.7 U	5.0 U	48 U	**8.4**	4.8 U
2-Methylnaphthalene	320,000	**5.8**	4.6 U	**16**	**54**	**14**	**8.2**	9.2 U	4.7 U	5.0 U	48 U	**9.6**	4.8 U
1-Methylnaphthalene	16,000	**4.7**	4.6 U	**9.0**	**33**	**12**	**7.3**	9.2 U	4.7 U	5.0 U	48 U	**8.0**	4.8 U
Total Naphthalenes	---	**15.9**	4.6 U	**41**	**124**	**41**	**22.5**	**14**	4.7 U	5.0 U	48 U	**26**	4.8 U
Acenaphthene	230,000	**2.8** J	4.6 U	**9.8**	**26**	**8.3**	4.6 U	9.2 U	4.7 U	5.0 U	48 U	4.6 U	4.8 U
Fluorene	150,000	4.5 U	4.6 U	**11**	**28**	**7.9**	4.6 U	9.2 U	4.7 U	5.0 U	48 U	4.6 U	4.8 U
Phenanthrene	---	**18**	**5.9**	**40**	**74**	**40**	**19**	**30**	4.7 U	**8.6**	48 U	**10**	**9.0**
Anthracene	1,600,000	4.5 U	4.6 U	**4.4** J	**11**	**7.0**	4.6 U	9.2 U	4.7 U	5.0 U	48 U	4.6 U	4.8 U
Fluoranthene	230,000	**8.9**	4.6 U	**24**	**42**	**50**	**22**	**38**	4.7 U	**7.4**	**32** J	**7.8**	**11**
Pyrene	240,000	**9.2**	**2.3** J	**23**	**55**	**42**	**22**	**49**	4.7 U	**8.9**	**35** J	**8.2**	**9.4**
Benzo(a)anthracene	---	**3.2** J	4.6 U	**8.7**	**15**	**16**	**9.9**	9.2 U	4.7 U	5.0 U	48 U	4.6 U	4.8 U
Chrysene	---	**5.6**	4.6 U	**14**	**35**	**23**	**16**	**59**	4.7 U	**7.9**	48 U	**6.9**	**8.2**
Benzo(a)pyrene	---	4.5 U	4.6 U	**9.4**	**12**	4.8 U	**12**	9.2 U	4.7 U	**5.0**	48 U	4.6 U	**6.0**
Indeno(1,2,3-cd)pyrene	---	4.5 U	4.6 U	**6.0**	**4.8**	**11**	**8.9**	**13**	4.7 U	5.0 U	48 U	4.6 U	**6.4**
Dibenz(a,h)anthracene	---	4.5 U	4.6 U	4.7 U	4.6 U	**5.3**	4.6 U	9.2 U	4.7 U	5.0 U	48 U	4.6 U	4.8 U
Benzo(g,h,i)perylene	---	4.5 U	4.6 U	**11**	**8.9**	**15**	**12**	**31**	4.7 U	5.0 U	**30** J	**5.1**	**7.8**
Dibenzofuran	80,000	**5.5**	4.6 U	**22**	**41**	**12**	**5.9**	9.2 U	4.7 U	5.0 U	48 U	4.6 U	4.8 U
Total Benzofluoranthenes	---	4.5 U	4.6 U	**16**	**24**	**32**	**24**	**58**	4.7 U	**8.4**	48 U	**5.9**	**14**
cPAH TEQ	15	**0.376**	ND	**12.61**	**16.73**	**6.66**	**16.44**	**7.69**	ND	**5.919**	ND	**0.66**	**8.12**
PCBs (µg/kg)													
Method SW8082													
Aroclor 1254	0.29	32 U	31 U	**11** J	32 U	33 U	31 U	32 U	32 U	31 U	33 U	32 U	32 U
Aroclor 1260	5.4	32 U	31 U	**7.4** J	32 U	33 U	31 U	**25** J	32 U	31 U	33 U	32 U	32 U
Total PCBs	1.8	ND	ND	**18.4** J	ND	ND	ND	**25** J	ND	ND	ND	ND	ND
TOTAL PETROLEUM HYDROCARBONS (mg/kg)													
NWTPH-HCID													
Diesel-Range Organics	---												
Gasoline-Range Organics	---												
Lube Oil	---												
NWTPH-Dx													
Diesel-Range Organics	2,000	5.0 U	5.0 U	**10**	**100**	**9.0**	**6.5**	**17**	5.1 U	5.4 U	**23**	**5.6**	**5.6**
Oil-Range Organics	2,000	**5.1** J	10 U	**59**	**200**	**21**	**32**	**170**	10 U	**11**	**300**	**15**	**16**
NWTPH-G													
Gasoline-Range Organics	100/30	5.9 U	6.3 U	6.7 U	6.8 U	**12**	7.7 U	8.0 U	6.2 U	5.7 U	6.1 U	7.9 U	5.8 U

TABLE Q-6
SOIL ANALYTICAL DETECTS
SOUTH OF FORMER SLIP 5 AREA
BOEING ISAACSON-THOMPSON
REMEDIAL INVESTIGATION

		Northern Portion of 14-01 Building											
	Preliminary Cleanup Levels	IT-BLDG1401-TRENCH-2N SU96A/SW32A 5/2/2011	IT-BLDG1401-TRENCH-2S SU96B/SW32B 5/2/2011	IT-BLDG1401-TRENCH-3N SV05A/SW32C 5/3/2011	IT-BLDG1401-TRENCH-3S SV05B/SW32D 5/3/2011	IT-BLDG1401-TRENCH-4N SW63A 5/12/2011	IT-BLDG1401-TRENCH-4S (a) SW63B 5/12/2011	IT-BLDG1401-TRENCH-5N (b) SW79A 5/13/2011	IT-BLDG1401-TRENCH-5S SW79B 5/13/2011	IT-Bldg1401-OuttakesExc-1 (3.5) SX84A 5/20/2011	IT-Bldg1401-OuttakesExc-2 (3.7) SX84B 5/20/2011	IT-Bldg1401-OuttakesExc-3 (2.9) SY11A 5/23/2011	IT-Bldg1401-OuttakesExc-4 (3.05) SY11B 5/23/2011
TOTAL METALS (mg/kg)													
Methods 200.8/7471A/SW7196A													
Barium	640	**32.4**	**39.8**	**36.5**	**62.5**	**40.4**	**47.9**	**43.4**	**19.5**	**47.4**	**52.5**	**40.0**	**47.6**
Beryllium	160	0.2 U	0.2 U	0.2 U	**0.2**	0.2 U	**0.2**	0.2 U	0.2 U	0.2 U	0.2 U	**0.2**	0.2 U
Cadmium	1.3	**0.1**	**0.10**	0.1 U	0.1 U	0.1 U	0.1 U	**0.3**	0.1 U	**0.1**	0.1 U	0.1 U	0.1 U
Chromium	1,480	**13.5**	**10.3**	**12.3**	**16.5**	**12.1**	**15.0**	**12.1**	**6.8**	**16.8**	**11.5**	**13.7**	**16.5**
Chromium VI	3.8	0.414 U	0.402 U	0.425 UJ	0.445 U	0.461 UJ	0.446 U	0.460 U	0.401 U	0.429 U	0.422 U	0.443 U	0.434 U
Copper	36	**13.9**	**10.6**	**20.6**	**24.4**	**22.8**	**19.6**	**23.6**	**8.4**	**16.5**	**30.8**	**15.8**	**17.9**
Lead	250	**2.5**	**2.59**	**5.4**	**5.6**	**3.5**	**6.4**	**11.6**	**1.3**	**4.7**	**8.4**	**5.2**	**8.4**
Mercury	1.5	0.02 U	0.02 U	**0.09**	**0.04**	**0.02**	**0.03**	**0.03**	0.02 U	**0.04**	0.02 U	0.02 U	**0.07**
Nickel	210	**12.5**	**11.2**	**14.1**	**13.8**	**10.0**	**16.9**	**11.9**	**6.6**	**22.7**	**14.1**	**19.3**	**24.8**
Zinc	1,400	**32**	**31**	**35**	**34**	**29**	**35**	**36**	**21**	**37**	**46**	**31**	**34**
CONVENTIONALS (mg/kg)													
Oil and Grease	---												

TABLE Q-6
SOIL ANALYTICAL DETECTS
SOUTH OF FORMER SLIP 5 AREA
BOEING ISAACSON-THOMPSON
REMEDIAL INVESTIGATION

		Former Washdown/Aqueous Degreaser Area													
	Preliminary Cleanup Levels	TDP5 (5) NX93E 11/3/2008	TDP6 (8) NY07A 11/4/2008	TDP7 (8) NY07B 11/4/2008	TDP8 (8) NY07C 11/4/2008	TDP9 (8) NY07D 11/4/2008	TDP10 (7) NY07P 11/4/2008	TDP10 (8) NY07E 11/4/2008	TDP11 (7) NY07F 11/4/2008	TDP11 (9) NY07G 11/4/2008	TDP12 (7) NY07H 11/4/2008	TDP13 (7) NY07J 11/4/2008	IT-MW-1 (3-4) ST77A 04/25/2011	IT-MW-1 (5-6) ST77B 04/25/2011	IT-MW-1 (8-9) ST77C 04/25/2011
VOLATILES (µg/kg)															
Method SW8260C															
Chloromethane	1,600	1.1 U	1.4 U	0.8 U	1.1 U	0.6 U	1.2 U	0.7 U	0.9 U	0.6 U	1.2 U	1.1 U	1.4 UJ	1.4 UJ	1.3 UJ
Vinyl Chloride	7.4	1.1 U	1.4 U	0.8 U	1.1 U	0.6 U	1.2 U	0.7 U	0.9 U	0.6 U	1.2 U	1.1 U	1.4 UJ	1.4 UJ	1.3 UJ
Methylene Chloride	2,400	2.1 U	2.7 U	1.6 U	2.3 U	1.3 U	2.5 U	1.3 U	1.8 U	1.3 U	2.5 U	2.2 U	**11** J	**16** J	**14** J
Acetone	510,000	**45**	**59**	**44**	**94**	**50**	**120**	**44**	**97**	**23**	**86**	**51**	**76** J	**34** J	**36** J
Carbon Disulfide	75,000	1.1 U	**9.8**	**1**	**4.4**	**2.3**	**26**	**5.8**	**22**	**2.5**	**8.8**	**8.5**	1.4 UJ	1.4 UJ	1.3 UJ
1,1-Dichloroethane	710	1.1 U	1.4 U	0.8 U	1.1 U	0.6 U	1.2 U	0.7 U	0.8 U	0.6 U	1.2 U	1.1 U	1.4 UJ	1.4 UJ	1.3 UJ
trans-1,2-Dichloroethene	19,000	1.1 U	1.4 U	0.8 U	1.1 U	0.6 U	1.2 U	0.7 U	0.8 U	0.6 U	1.2 U	1.1 U	1.4 UJ	1.4 UJ	1.3 UJ
cis-1,2-Dichloroethene	2,600	1.1 U	1.4 U	0.8 U	**1.5**	0.6 U	1.2 U	0.7 U	0.8 U	0.6 U	1.2 U	1.1 U	1.4 UJ	1.4 UJ	1.3 UJ
2-Butanone	430,000	7.6	**9.8**	**7**	**12**	**9.9**	**25**	**7.4**	**20**	**4.5**	**14**	**7.9**	7.0 UJ	6.8 UJ	6.4 UJ
1,1,1-Trichloroethane	1,900,000	1.1 U	1.4 U	0.8 U	1.1 U	0.6 U	1.2 U	0.7 U	0.9 U	0.6 U	1.2 U	1.1 U	1.4 UJ	1.4 UJ	1.3 UJ
Trichloroethene	51	1.1 U	1.4 U	0.8 U	1.1 U	0.6 U	1.2 U	0.7 U	0.9 U	0.6 U	1.2 U	1.1 U	1.4 UJ	1.4 UJ	1.3 UJ
Benzene	93	1.1 U	1.4 U	0.8 U	**4.3**	0.6 U	1.2 U	0.7 U	0.9 U	0.6 U	1.2 U	1.1 U	1.4 UJ	1.4 UJ	1.3 UJ
Tetrachloroethene	260	1.1 U	1.4 U	0.8 U	1.1 U	0.6 U	1.2 U	0.7 U	0.9 U	0.6 U	1.2 U	1.1 U	1.4 UJ	1.4 UJ	1.3 UJ
Toluene	100,000	1.1 U	1.4 U	0.8 U	**2**	0.6 U	1.2 U	0.7 U	0.9 U	0.6 U	1.2 U	1.1 U	1.4 UJ	1.4 UJ	1.3 UJ
Trichlorofluoromethane	200,000	1.1 U	1.4 U	0.8 U	1.1 U	0.6 U	1.2 U	0.7 U	0.9 U	0.6 U	1.2 U	1.1 U	1.4 UJ	1.4 UJ	1.3 UJ
m,p-Xylene	160,000	1.1 U	1.4 U	0.8 U	1.1 U	0.6 U	1.2 U	0.7 U	0.9 U	0.6 U	1.2 U	1.1 U	1.4 UJ	1.4 UJ	1.3 UJ
Methyl Iodide	---												1.4 UJ	1.4 UJ	1.3 UJ
1,2,4-Trimethylbenzene	800,000												1.4 UJ	1.4 UJ	1.3 UJ
sec-Butylbenzene	---												1.4 UJ	1.4 UJ	1.3 UJ
SEMIVOLATILES (µg/kg)															
Method SW8270D															
Phenol	1,900,000			63 U	61 U					60000 U			20 U	19 U	19 U
Benzyl Alcohol	8,000,000			63 U	61 U					60 U			20 UJ	19 UJ	19 UJ
4-Methylphenol	41,000			63 U	**170**					60 U			20 U	19 U	19 U
Benzoic Acid	9,000			630 U	610 U					600 U			**120** J	190 U	190 U
Naphthalene	2,100			63 U	**260**					60 U			**17** J	**10** J	19 U
2-Methylnaphthalene	320,000			63 U	**64**					60 U			**16** J	19 U	19 U
Acenaphthene	230,000			63 U	61 U					60 U			20 U	19 U	19 U
Dibenzofuran	80,000			63 U	61 U					60 U			**17** J	19 U	19 U
Fluorene	150,000			63 U	61 U					60 U			**17** J	19 U	19 U
Phenanthrene	---			63 U	**160**					60000 U			**48** J	**12** J	19 UJ
Anthracene	1,600,000			63 U	61 U					60 U			**14** J	19 U	19 U
Fluoranthene	230,000			63 U	**100**					60 U			**64**	**15** J	19 U
Pyrene	240,000			63 U	**110**					60000 U			**69**	**14** J	19 U
Butylbenzylphthalate	1,700			63 U	61 U					60 U			20 UJ	19 UJ	19 UJ
Benzo(a)anthracene	---			63 U	61 U					60 U			**29**	19 U	19 U
bis(2-Ethylhexyl)phthalate	56,600			63 U	61 U					60 U			**14** J	**38**	**26**
Chrysene	---			63 U	61 U					60 U			**45** J	**10** J	19 U
Benzo(a)pyrene	---			63 U	61 U					60 U			20 U	19 U	19 U
Indeno(1,2,3-cd)pyrene	---			63 U	61 U					60 U			**20**	19 U	19 U
Dibenz(a,h)anthracene	---			63 U	61 U					60 U			20 U	19 U	19 U
Benzo(g,h,i)perylene	---			63 U	61 U					60 U			**28**	19 U	19 U
1-Methylnaphthalene	16,000			63 U	61 U					60 U			**14** J	19 U	19 U
Total Benzofluoranthenes	---												**55**	**11** J	19 U
cPAH TEQ	15			ND	ND					ND			**11**	**1** J	ND

TABLE Q-6
SOIL ANALYTICAL DETECTS
SOUTH OF FORMER SLIP 5 AREA
BOEING ISAACSON-THOMPSON
REMEDIAL INVESTIGATION

		Former Washdown/Aqueous Degreaser Area													
	Preliminary Cleanup Levels	TDP5 (5) NX93E 11/3/2008	TDP6 (8) NY07A 11/4/2008	TDP7 (8) NY07B 11/4/2008	TDP8 (8) NY07C 11/4/2008	TDP9 (8) NY07D 11/4/2008	TDP10 (7) NY07P 11/4/2008	TDP10 (8) NY07E 11/4/2008	TDP11 (7) NY07F 11/4/2008	TDP11 (9) NY07G 11/4/2008	TDP12 (7) NY07H 11/4/2008	TDP13 (7) NY07J 11/4/2008	IT-MW-1 (3-4) ST77A 04/25/2011	IT-MW-1 (5-6) ST77B 04/25/2011	IT-MW-1 (8-9) ST77C 04/25/2011
PAHs (µg/kg)															
Method SW8270D-SIM															
Naphthalene	2,100												**14**	**3.6** J	**2.7** J
2-Methylnaphthalene	320,000												**14**	**3.3** J	4.6 U
1-Methylnaphthalene	16,000												**13**	4.8 U	4.6 U
Total Naphthalenes	---														
Acenaphthene	230,000												**9.1**	4.8 U	4.6 U
Fluorene	150,000												**13**	4.8 U	4.6 U
Phenanthrene	---												**50**	**11**	**2.6** J
Anthracene	1,600,000												**10**	4.8 U	4.6 U
Fluoranthene	230,000												**64**	**8.8**	4.6 U
Pyrene	240,000												**53**	**8.4**	4.6 U
Benzo(a)anthracene	---												**20**	**3.5** J	4.6 U
Chrysene	---												**28**	**6.7**	4.6 U
Benzo(a)pyrene	---												4.8 U	4.8 U	4.6 U
Indeno(1,2,3-cd)pyrene	---												14 U	4.8 U	4.6 U
Dibenz(a,h)anthracene	---												**5.1**	4.8 U	4.6 U
Benzo(g,h,i)perylene	---												20 U	10 U	4.6 U
Dibenzofuran	80,000												**14**	4.8 U	4.6 U
Total Benzofluoranthenes	---												**44**	**7.6**	4.6 U
cPAH TEQ	15												**7.19**	**1.177**	ND
PCBs (µg/kg)															
Method SW8082															
Aroclor 1254	0.29			32 U	31 U					31 U			31 U	30 U	31 U
Aroclor 1260	5.4			32 U	31 U					31 U			31 U	30 U	31 U
Total PCBs	1.8			ND	ND					ND			ND	ND	ND
TOTAL PETROLEUM HYDROCARBONS (mg/kg)															
NWTPH-HCID															
Diesel-Range Organics	---	50 U	50 U	50 U	50 U	50 U		50 U		50 U	170 U	50 U			
Gasoline-Range Organics	---	20 U	**20**	**20**	**20**	**20**		**20**		**20**	67 U	**20**			
Lube Oil	---	100 U	100 U	100 U	100 U	100 U		100 U		**100**	**330**	100 U			
NWTPH-Dx															
Diesel-Range Organics	2,000									**20**	**140**		**13**	**5.9**	5.3 U
Oil-Range Organics	2,000									**130**	**990**		**34**	**27**	11 U
NWTPH-G															
Gasoline-Range Organics	100/30												8.8 U	6.1 U	6.9 U

TABLE Q-6
SOIL ANALYTICAL DETECTS
SOUTH OF FORMER SLIP 5 AREA
BOEING ISAACSON-THOMPSON
REMEDIAL INVESTIGATION

		Former Washdown/Aqueous Degreaser Area													
	Preliminary Cleanup Levels	TDP5 (5) NX93E 11/3/2008	TDP6 (8) NY07A 11/4/2008	TDP7 (8) NY07B 11/4/2008	TDP8 (8) NY07C 11/4/2008	TDP9 (8) NY07D 11/4/2008	TDP10 (7) NY07P 11/4/2008	TDP10 (8) NY07E 11/4/2008	TDP11 (7) NY07F 11/4/2008	TDP11 (9) NY07G 11/4/2008	TDP12 (7) NY07H 11/4/2008	TDP13 (7) NY07J 11/4/2008	IT-MW-1 (3-4) ST77A 04/25/2011	IT-MW-1 (5-6) ST77B 04/25/2011	IT-MW-1 (8-9) ST77C 04/25/2011
TOTAL METALS (mg/kg)															
Methods 200.8/7471A/SW7196A															
Barium	640												**51.7**	**3.2**	**28.2**
Beryllium	160												**0.3**	0.2 U	0.2 U
Cadmium	1.3	0.2 U	0.2 U	0.2 U	**0.2**	0.2 U		0.2 U		0.2 U	**0.8**	0.6 U	**0.1**	0.1 U	0.1 U
Chromium	1,480	**8.8**	**13.6**	**16.5**	**13.8**	**15.1**		**20.7**		**17.1**	**20**	**17**	**15.1**	**9.3**	**8.8**
Chromium VI	3.8												0.510 UJ	0.434 U	0.417 U
Copper	36	**10.8**	**20.5** J	**20.2**	**21.6**	**17.7**		**18.9**		**24.8**	**31.3**	**97.1**	**34.2**	**15.7**	**12.5**
Lead	250	2 U	2 U	**2**	**7**	2 U		2 U		**3**	**13**	6 U	**7.9**	**4.7**	**1.5**
Mercury	1.5	0.04 U	0.05 U	0.05 U	0.05 U	0.05 U		0.06 U		0.04 U	**0.19**	0.06 U	**0.04**	**0.03**	0.02 U
Nickel	210												**14.8**	**9.6**	**8.1**
Zinc	1,400												**55**	**33**	**22**
CONVENTIONALS (mg/kg)															
Oil and Grease	---														

TABLE Q-6
SOIL ANALYTICAL DETECTS
SOUTH OF FORMER SLIP 5 AREA
BOEING ISAACSON-THOMPSON
REMEDIAL INVESTIGATION

	Preliminary Cleanup Levels	Former Washdown/Aqueous Degreaser Area												
		IT-MW-2 (2-3) SU07A 04/26/2011	IT-MW-2 (5-6) SU07B 04/26/2011	IT-MW-2 (8-9) SU07C 04/26/2011	IT-MW-3 (2-3) SU07D 04/26/2011	IT-MW-3 (5-6) SU07E 04/26/2011	IT-MW-3 (9-10) SU07F 04/26/2011	IT-SB-1 (2-3) ST77D 04/25/2011	IT-SB-1 (5-6) ST77E 04/25/2011	IT-SB-1 (8-9) ST77F 04/25/2011	IT-Bldg1401-FootingExc1-SW(4.0) TB91C 06/23/2011	IT-Bldg1401-FootingExc1-B(6.0) TB91D 06/23/2011	IT-Bldg1401-FootingExc1-B(7.5) TC25A 6/27/2011	IT-Bldg1401-FootingExc3-B(4.0) TB68B 06/22/2011
VOLATILES (µg/kg)														
Method SW8260C														
Chloromethane	1,600	1.1 U	1.2 U	1.9 U	1.2 U	1.1 U	1.5 U	1.0 UJ	1.2 UJ	1.9 UJ	1.2 U	1.5 U	1.1 U	1.2 U
Vinyl Chloride	7.4	1.1 U	1.2 U	1.9 U	1.2 U	1.1 U	1.5 U	1.0 UJ	1.2 UJ	1.9 UJ	1.2 U	1.5 U	1.1 U	1.2 U
Methylene Chloride	2,400	**11**	**13**	**15**	**14**	**13**	**19**	**10** J	**12** J	**11** J	**21**	**29**	**14**	**21**
Acetone	510,000	**26**	**88**	**93**	**34**	**26** J	**85** J	**20** J	**39** J	**100** J	**24**	**19**	**53**	**97**
Carbon Disulfide	75,000	1.1 U	1.2 U	**8.7**	1.2 U	1.1 U	**2.0**	1.0 UJ	1.2 UJ	**7.1** J	1.2 U	1.5 U	**1.8**	**4.8**
1,1-Dichloroethane	710	1.1 U	1.2 U	1.9 U	1.2 U	1.1 U	1.5 U	1.0 UJ	1.2 UJ	1.9 UJ	1.2 U	1.5 U	1.1 U	1.2 U
trans-1,2-Dichloroethene	19,000	1.1 U	1.2 U	1.9 U	1.2 U	1.1 U	1.5 U	1.0 UJ	1.2 UJ	1.9 UJ	1.2 U	1.5 U	1.1 U	1.2 U
cis-1,2-Dichloroethene	2,600	1.1 U	1.2 U	1.9 U	1.2 U	1.1 U	1.5 U	1.0 UJ	1.2 UJ	1.9 UJ	1.2 U	1.5 U	1.1 U	1.2 U
2-Butanone	430,000	5.3 U	**7.1**	**14**	6.2 U	5.4 U	**9.0**	4.9 UJ	5.8 UJ	**14** J	5.8 U	7.3 U	5.4 U	**15**
1,1,1-Trichloroethane	1,900,000	1.1 U	1.2 U	1.9 U	1.2 U	1.1 U	1.5 U	1.0 UJ	1.2 UJ	1.9 UJ	1.2 U	1.5 U	1.1 U	1.2 U
Trichloroethene	51	1.1 U	1.2 U	1.9 U	1.2 U	1.1 U	1.5 U	1.0 UJ	1.2 UJ	1.9 UJ	1.2 U	1.5 U	1.1 U	1.2 U
Benzene	93	1.1 U	1.2 U	1.9 U	1.2 U	1.1 U	1.5 U	1.0 UJ	1.2 UJ	1.9 UJ	**0.6** J	1.5 U	**0.6** J	1.2 U
Tetrachloroethene	260	1.1 U	1.2 U	1.9 U	1.2 U	1.1 U	1.5 U	1.0 UJ	1.2 UJ	1.9 UJ	1.2 U	1.5 U	1.1 U	1.2 U
Toluene	100,000	1.1 U	1.2 U	1.9 U	1.2 U	1.1 U	1.5 U	1.0 UJ	1.2 UJ	1.9 UJ	**0.6** J	**0.9** J	**0.6** J	**0.7** J
Trichlorofluoromethane	200,000	1.1 U	1.2 U	1.9 U	1.2 U	1.1 U	1.5 U	1.0 UJ	1.2 UJ	1.9 UJ	1.2 U	1.5 U	1.1 U	1.2 U
m,p-Xylene	160,000	1.1 U	1.2 U	1.9 U	1.2 U	1.1 U	1.5 U	1.0 UJ	1.2 UJ	1.9 UJ	1.2 U	1.5 U	1.1 U	1.2 U
Methyl Iodide	---	1.1 U	1.2 U	1.9 U	1.2 U	1.1 U	1.5 U	1.0 UJ	1.2 UJ	1.9 UJ	1.2 U	1.5 U	1.1 U	1.2 U
1,2,4-Trimethylbenzene	800,000	1.1 U	1.2 U	1.9 U	**1.4**	1.1 U	1.5 U	1.0 UJ	1.2 UJ	1.9 UJ	1.2 U	1.5 U	1.1 U	1.2 U
sec-Butylbenzene	---	1.1 U	1.2 U	1.9 U	1.2 U	1.1 U	1.5 U	1.0 UJ	1.2 UJ	1.9 UJ	1.2 U	1.5 U	1.1 U	1.2 U
SEMIVOLATILES (µg/kg)														
Method SW8270D														
Phenol	1,900,000	18 U	19 U	**56**	19 U	18 U	**15** J	18 U	18 U	**62**	58 U	19 U	19 U	20 U
Benzyl Alcohol	8,000,000	18 U	19 U	**160**	19 U	18 U	**68**	18 UJ	18 UJ	19 UJ	58 U	19 U	19 U	20 U
4-Methylphenol	41,000	18 U	19 U	**65**	19 U	18 U	**10** J	18 U	18 U	**160**	120 U	37 U	**78**	39 U
Benzoic Acid	9,000	180 U	190 U	**530**	190 U	180 U	**210**	180 U	180 U	**470**	1200 U	370 U	390 U	390 U
Naphthalene	2,100	18 U	19 U	**62**	19 U	18 U	**12** J	18 U	18 U	**60**	58 U	19 U	**150**	**22**
2-Methylnaphthalene	320,000	18 U	19 U	**29**	19 U	18 U	18 U	18 U	18 U	**45**	58 U	19 U	**30**	**31**
Acenaphthene	230,000	18 U	19 U	**11** J	19 U	18 U	18 U	18 U	18 U	**14** J	58 U	19 U	**13** J	**18** J
Dibenzofuran	80,000	18 U	19 U	19 U	19 U	18 U	18 U	18 U	18 U	**32**	58 U	19 U	**23**	**25**
Fluorene	150,000	18 U	19 U	**20**	19 U	18 U	18 U	18 U	18 U	**22**	58 U	19 U	19 U	**34**
Phenanthrene	---	18 U	**11** J	**64**	**10** J	18 U	**10** J	**11** J	18 UJ	**110** J	58 U	19 U	**110**	**54**
Anthracene	1,600,000	18 U	19 U	**16** J	19 U	18 U	18 U	18 U	18 U	**22**	58 U	19 U	**13** J	**11** J
Fluoranthene	230,000	18 U	19 U	**60** J	19 U	18 U	18 U	**21**	18 U	**91**	58 U	19 U	**120**	**43**
Pyrene	240,000	18 U	19 U	**53**	19 U	18 U	18 U	**13** J	18 U	**98**	58 U	19 U	**120**	**35**
Butylbenzylphthalate	1,700	18 U	19 U	19 U	19 U	18 U	18 U	18 UJ	18 UJ	19 UJ	58 U	19 U	19 U	20 U
Benzo(a)anthracene	---	18 U	19 U	**16** J	19 U	18 U	18 U	18 U	18 U	**32**	58 U	19 U	**27**	20 U
bis(2-Ethylhexyl)phthalate	56,600	**14** J	**14** J	**29**	**10** J	**10** J	**33**	**19**	**15** J	**39**	73 U	23 U	24 U	**18** J
Chrysene	---	18 U	**20** J	**26**	19 U	18 U	18 U	**12** J	18 U	**48** J	58 U	19 U	**61**	**27**
Benzo(a)pyrene	---	18 U	19 U	**11** J	19 U	18 U	18 U	18 U	18 U	19 U	58 U	19 U	**24**	**11** J
Indeno(1,2,3-cd)pyrene	---	18 U	19 U	19 U	19 U	18 U	18 U	18 U	18 U	**15** J	58 U	19 U	**16** J	20 U
Dibenz(a,h)anthracene	---	18 U	19 U	19 U	19 U	18 U	18 U	18 U	18 U	19 U	58 U	19 U	19 U	20 U
Benzo(g,h,i)perylene	---	18 U	**16** J	**12** J	**12** J	18 U	18 U	18 U	18 U	**20**	58 U	19 U	**21**	**13** J
1-Methylnaphthalene	16,000	18 U	19 U	**22**	19 U	18 U	18 U	18 U	18 U	**30**	58 U	19 U	**17** J	**15** J
Total Benzofluoranthenes	---	18 U	19 U	**36**	19 U	18 U	18 U	**13** J	18 U	**58**	58 U	19 U	**81**	**20**
cPAH TEQ	15	ND	**0.2** J	**16** J	ND	ND	ND	**1** J	ND	**11** J	ND	ND	**37** J	**13** J

TABLE Q-6
SOIL ANALYTICAL DETECTS
SOUTH OF FORMER SLIP 5 AREA
BOEING ISAACSON-THOMPSON
REMEDIAL INVESTIGATION

	Preliminary Cleanup Levels	Former Washdown/Aqueous Degreaser Area												
		IT-MW-2 (2-3) SU07A 04/26/2011	IT-MW-2 (5-6) SU07B 04/26/2011	IT-MW-2 (8-9) SU07C 04/26/2011	IT-MW-3 (2-3) SU07D 04/26/2011	IT-MW-3 (5-6) SU07E 04/26/2011	IT-MW-3 (9-10) SU07F 04/26/2011	IT-SB-1 (2-3) ST77D 04/25/2011	IT-SB-1 (5-6) ST77E 04/25/2011	IT-SB-1 (8-9) ST77F 04/25/2011	IT-Bldg1401-FootingExc1-SW(4.0) TB91C 06/23/2011	IT-Bldg1401-FootingExc1-B(6.0) TB91D 06/23/2011	IT-Bldg1401-FootingExc1-B(7.5) TC25A 6/27/2011	IT-Bldg1401-FootingExc3-B(4.0) TB68B 06/22/2011
PAHs (µg/kg)														
Method SW8270D-SIM														
Naphthalene	2,100	4.8 U	4.6 U	**57**	4.8 U	4.6 U	**14**	**4.3** J	4.7 U	**23**	**3.4** J	4.7 U	**56**	**26**
2-Methylnaphthalene	320,000	4.8 U	**7.2**	**45**	4.8 U	4.6 U	4.7 U	**6.0**	**2.9** J	**27**	**4.1** J	4.7 U	**12**	**30**
1-Methylnaphthalene	16,000	4.8 U	**6.6**	**36**	4.8 U	4.6 U	4.7 U	**5.0**	**2.6** J	**22**	**2.9** J	4.7 U	**8.5**	**24**
Total Naphthalenes	---										**10.4** J	4.7 U	**76.5**	**80**
Acenaphthene	230,000	4.8 U	4.6 U	**27**	4.8 U	4.6 U	4.7 U	4.6 U	4.7 U	**14**	4.9 U	4.7 U	**7.5**	**25**
Fluorene	150,000	4.8 U	4.6 U	**25**	4.8 U	4.6 U	4.7 U	4.6 U	4.7 U	**13**	4.9 U	4.7 U	4.8 U	**30**
Phenanthrene	---	4.8 U	**8.9**	**96**	**11**	**6.3**	**13**	**24**	**7.5**	**55**	**12**	**6.0**	**57**	**59**
Anthracene	1,600,000	4.8 U	4.6 U	**19**	4.8 U	4.6 U	4.7 U	4.6 U	4.7 U	**11**	4.9 U	4.7 U	**6.5**	**12**
Fluoranthene	230,000	4.8 U	**6.0**	**90**	**6.4**	4.6 U	**7.0**	**33**	**4.5** J	**51**	**8.5**	**2.6** J	**58**	**46**
Pyrene	240,000	4.8 U	**5.8**	**97**	**10**	**5.0**	**7.2**	**20**	**5.2**	**53**	**9.1**	**3.0** J	**65**	**44**
Benzo(a)anthracene	---	4.8 U	4.6 U	**29**	**7.5**	4.6 U	4.7 U	**8.6**	4.7 U	**19**	**4.0** J	4.7 U	**17**	**16**
Chrysene	---	4.8 U	**13**	**40**	**23**	**5.9**	**4.7**	**19**	**3.6** J	**25**	**10**	**2.8** J	**40**	**27**
Benzo(a)pyrene	---	4.8 U	**5.2**	4.8 U	**11**	4.6 U	4.7 U	6.6 U	4.7 U	4.7 U	**3.6** J	4.7 U	**19**	**11**
Indeno(1,2,3-cd)pyrene	---	4.8 U	4.6 U	**9.2**	4.8 U	4.6 U	4.7 U	5.4 U	4.7 U	7.5 U	**5.0**	4.7 U	**14**	**6.4**
Dibenz(a,h)anthracene	---	4.8 U	4.6 U	4.8 U	4.8 U	4.6 U	4.7 U	4.6 U	4.7 U	**2.8** J	4.9 U	4.7 U	3.8 U	**10**
Benzo(g,h,i)perylene	---	4.8 U	**17**	**14**	**13**	**4.9**	4.7 U	8.0 U	4.7 U	11 U	**14**	**3.3** J	**18**	**12**
Dibenzofuran	80,000	4.8 U	4.6 U	**26**	4.8 U	4.6 U	4.7 U	**6.9**	4.7 U	**15**	**2.9** J	4.7 U	**8.9**	**26**
Total Benzofluoranthenes	---	4.8 U	4.6 U	**51**	**20**	4.6 U	4.7 U	**20**	4.7 U	**34**	**9.9**	4.7 U	**54**	**23**
cPAH TEQ	15	ND	**5.33**	**9.32**	**13.98**	**0.059**	**0.047**	**3.05**	**0.036**	**5.83**	**5.59**	**0.028**	**28**	**16.8**
PCBs (µg/kg)														
Method SW8082														
Aroclor 1254	0.29	31 U	32 UJ	32 UJ	30 U	32 U	31 U	31 U	31 U	**39**	33 U	32 U	32 U	31 U
Aroclor 1260	5.4	31 U	32 UJ	32 UJ	30 U	32 U	31 U	31 U	31 U	**36**	33 U	32 U	32 U	31 U
Total PCBs	1.8	ND	ND	ND	ND	ND	ND	ND	ND	**75**	ND	ND	ND	ND
TOTAL PETROLEUM HYDROCARBONS (mg/kg)														
NWTPH-HCID														
Diesel-Range Organics	---													
Gasoline-Range Organics	---													
Lube Oil	---													
NWTPH-Dx														
Diesel-Range Organics	2,000	5.4 U	**22**	**15**	**15**	**6.0**	6.6 U	**8.1**	**4.4** J	**51**	**27**	**7.2**	**38**	**42**
Oil-Range Organics	2,000	11 U	**230**	**40**	**150**	**42**	13 U	**80**	**9.7** J	**130**	**110**	**18**	**60**	**92**
NWTPH-G														
Gasoline-Range Organics	100/30	**9.7**	6.0 U	13 U	7.4 U	6.1 U	10 U	6.1 U	7.2 U	11 U	7.0 U	7.4 U	7.8 U	6.6 U

TABLE Q-6
SOIL ANALYTICAL DETECTS
SOUTH OF FORMER SLIP 5 AREA
BOEING ISAACSON-THOMPSON
REMEDIAL INVESTIGATION

		Former Washdown/Aqueous Degreaser Area												
	Preliminary Cleanup Levels	IT-MW-2 (2-3) SU07A 04/26/2011	IT-MW-2 (5-6) SU07B 04/26/2011	IT-MW-2 (8-9) SU07C 04/26/2011	IT-MW-3 (2-3) SU07D 04/26/2011	IT-MW-3 (5-6) SU07E 04/26/2011	IT-MW-3 (9-10) SU07F 04/26/2011	IT-SB-1 (2-3) ST77D 04/25/2011	IT-SB-1 (5-6) ST77E 04/25/2011	IT-SB-1 (8-9) ST77F 04/25/2011	IT-Bldg1401-FootingExc1-SW(4.0) TB91C 06/23/2011	IT-Bldg1401-FootingExc1-B(6.0) TB91D 06/23/2011	IT-Bldg1401-FootingExc1-B(7.5) TC25A 6/27/2011	IT-Bldg1401-FootingExc3-B(4.0) TB68B 06/22/2011
TOTAL METALS (mg/kg)														
Methods 200.8/7471A/SW7196A														
Barium	640	**57.6**	**51.5**	**81.6**	**48.6**	**44.0**	**81.8**	**43.2**	**46.8**	**85.0**	**47.2**	**39.6**	**50.1**	**58.3**
Beryllium	160	0.2 U	0.2 U	**0.5**	0.2 U	0.2 U	**0.3**	0.2 U	0.2 U	**0.5**	0.2 U	0.2 U	**0.2**	0.2 U
Cadmium	1.3	0.1 U	0.1 U	**0.9**	0.1 U	**0.1**	**0.1**	0.1 U	0.1 U	**0.8**	0.1 U	**0.1**	**0.2**	0.1 U
Chromium	1,480	**22.3**	**12.0**	**24.6**	**12.2**	**11.3**	**18.7**	**18.8**	**13.0**	**30**	**13.6**	**10.8**	**14**	**13.5**
Chromium VI	3.8	0.423 U	0.449 U	0.645 U	0.429 U	0.410 U	0.530 U	0.436 U	0.466 U	0.628 U	0.449 U	0.416 U	0.472 U	0.445 U
Copper	36	**15.7**	**16.4**	**42.5**	**21.1**	**14.9**	**28.3**	**18.1**	**19.6**	**43.0**	**17.7**	**12.6**	**38.2**	**20**
Lead	250	**5.8**	**3.8**	**15.3**	**6.7**	**3.5**	**5.0**	**4.0**	**5.6**	**16.7**	**5.9**	**4.2**	**12.6**	**5.8**
Mercury	1.5	0.02 U	**0.05**	**0.16**	**0.02**	**0.02**	**0.08**	**0.02**	**0.03**	**0.25**	**0.02**	**0.02**	**0.06**	**0.03**
Nickel	210	**39.5**	**13.7**	**23.1**	**13.7**	**14.6**	**19.3**	**29.2**	**14.2**	**22.5**	**17.5**	**11.0**	**14.2**	**17.1**
Zinc	1,400	**35**	**38**	**94**	**36**	**40**	**69**	**34**	**41**	**97**	**33**	**35**	**49**	**36**
CONVENTIONALS (mg/kg)														
Oil and Grease	---													

TABLE Q-6
SOIL ANALYTICAL DETECTS
SOUTH OF FORMER SLIP 5 AREA
BOEING ISAACSON-THOMPSON
REMEDIAL INVESTIGATION

		Former Washdown/Aqueous Degreaser Area						Former Washdown System Collection Tanks/Loading Dock Area							
	Preliminary Cleanup Levels	IT-Bldg1401-FootingExc5-SW(4.0) TB91B 06/23/2011	IT-Bldg1401-FootingExc5-B(6.0) TB91A 06/23/2011	IT-Bldg1401-Footing Exc8-B(2.5) TB68C 06/22/2011	IT-Bldg1401-FootingExc10-B(1.5) TC19A 06/24/2011	IT-Bldg1401-FootingExc14-B(4.0) TB68D 06/22/2011	IT-Bldg1401-FootingExc15-B(4.0) TB68A 06/22/2011	234 (2.5) 1/22/1988	234 (7.5) 1/22/1988	234 (12.5) 1/22/1988	234 (17.5) 1/22/1988	TDP14 (4) NY07K 11/4/2008	TDP15 (4) NY07L 11/4/2008	TDP16 (3) NY44A 11/5/2008	TDP17 (4) NY44B 11/5/2008
VOLATILES (µg/kg)															
Method SW8260C															
Chloromethane	1,600	1.1 U	1.4 U	1.0 U	1.2 U	1.3 U	1.2 U					1.1 U	0.8 U	1.2 U	1 U
Vinyl Chloride	7.4	1.1 U	1.4 U	1.0 U	1.2 U	1.3 U	1.2 U					1.1 U	0.8 U	1.2 U	1 U
Methylene Chloride	2,400	**20**	**26**	**22**	**17**	**25**	**25**					2.2 U	1.6 U	2.3 U	2 U
Acetone	510,000	**28**	**16**	**33**	**13**	**42**	**16**					**25**	**31**	**70**	**57**
Carbon Disulfide	75,000	1.1 U	1.4 U	1.0 U	1.2 U	1.3 U	1.2 U					**1.3**	0.8 U	**2.2**	**5.6**
1,1-Dichloroethane	710	1.1 U	1.4 U	1.0 U	1.2 U	1.3 U	1.2 U					1.1 U	0.8 U	1.2 U	1 U
trans-1,2-Dichloroethene	19,000	1.1 U	1.4 U	1.0 U	1.2 U	1.3 U	1.2 U					1.1 U	0.8 U	1.2 U	1 U
cis-1,2-Dichloroethene	2,600	1.1 U	1.4 U	1.0 U	1.2 U	1.3 U	1.2 U					1.1 U	0.8 U	1.2 U	1 U
2-Butanone	430,000	5.7 U	7.2 U	5.1 U	6.0 U	6.3 U	5.9 U					5.5 U	4 U	**9.2**	**9**
1,1,1-Trichloroethane	1,900,000	1.1 U	1.4 U	1.0 U	1.2 U	1.3 U	1.2 U					1.1 U	0.8 U	1.2 U	1 U
Trichloroethene	51	1.1 U	1.4 U	1.0 U	1.2 U	**93**	**24**					1.1 U	0.8 U	1.2 U	1 U
Benzene	93	1.1 U	1.4 U	1.0 U	1.2 U	**0.7** J	1.2 U					1.1 U	**2.3**	**3.9**	1 U
Tetrachloroethene	260	1.1 U	1.4 U	1.0 U	1.2 U	**4.6**	**2.6**					1.1 U	**1.5**	1.2 U	1 U
Toluene	100,000	1.1 U	**0.8** J	**0.7** J	1.2 U	**0.8** J	**0.8** J					1.1 U	0.8 U	1.2 U	1 U
Trichlorofluoromethane	200,000	1.1 U	1.4 U	1.0 U	1.2 U	1.3 U	1.2 U					1.1 U	0.8 U	1.2 U	1 U
m,p-Xylene	160,000	1.1 U	1.4 U	1.0 U	1.2 U	1.3 U	1.2 U					1.1 U	0.8 U	1.2 U	1 U
Methyl Iodide	---	1.1 U	1.4 U	1.0 U	1.2 U	1.3 U	1.2 U								
1,2,4-Trimethylbenzene	800,000	1.1 U	1.4 U	1.0 U	1.2 U	1.3 U	1.2 U								
sec-Butylbenzene	---	1.1 U	1.4 U	1.0 U	1.2 U	1.3 U	1.2 U								
SEMIVOLATILES (µg/kg)															
Method SW8270D															
Phenol	1,900,000	58 U	19 U	19 U	19 U	19 U	20 U							62 U	
Benzyl Alcohol	8,000,000	58 U	19 U	19 U	19 U	19 U	20 U							62 U	
4-Methylphenol	41,000	120 U	38 U	38 U	38 U	39 U	39 U							62 U	
Benzoic Acid	9,000	1200 U	380 U	380 U	380 U	390 U	390 U							620 U	
Naphthalene	2,100	58 U	19 U	19 U	**19**	**13** J	20 U							62 U	
2-Methylnaphthalene	320,000	58 U	19 U	19 U	**22**	**20**	20 U							62 U	
Acenaphthene	230,000	58 U	19 U	19 U	**120**	19 U	20 U							62 U	
Dibenzofuran	80,000	58 U	19 U	19 U	**210**	19 U	20 U							62 U	
Fluorene	150,000	58 U	19 U	19 U	**110**	19 U	20 U							62 U	
Phenanthrene	---	**38** J	19 U	19 U	**140**	**27**	**9.8** J							**71**	
Anthracene	1,600,000	58 U	19 U	19 U	**15** J	19 U	20 U							62 U	
Fluoranthene	230,000	58 U	19 U	19 U	**28**	**13** J	20 U							62 U	
Pyrene	240,000	58 U	19 U	19 U	**22**	**9.7** J	20 U							62 U	
Butylbenzylphthalate	1,700	58 U	19 U	19 U	19 U	19 U	20 U							62 U	
Benzo(a)anthracene	---	58 U	19 U	19 U	19 U	19 U	20 U							62 U	
bis(2-Ethylhexyl)phthalate	56,600	72 U	24 U	24 U	24 U	24 U	24 U							62 U	
Chrysene	---	58 U	19 U	19 U	19 U	19 U	20 U							62 U	
Benzo(a)pyrene	---	58 U	19 U	19 U	19 U	19 U	20 U							62 U	
Indeno(1,2,3-cd)pyrene	---	58 U	19 U	19 U	19 U	19 U	20 U							62 U	
Dibenz(a,h)anthracene	---	58 U	19 U	19 U	19 U	19 U	20 U							62 U	
Benzo(g,h,i)perylene	---	58 U	19 U	19 U	19 U	19 U	20 U							62 U	
1-Methylnaphthalene	16,000	58 U	19 U	19 U	10 J	**18** J	20 U							62 U	
Total Benzofluoranthenes	---	58 U	19 U	19 U	19 U	19 U	20 U								
cPAH TEQ	15	ND	ND	ND	ND	ND	ND							ND	

TABLE Q-6
SOIL ANALYTICAL DETECTS
SOUTH OF FORMER SLIP 5 AREA
BOEING ISAACSON-THOMPSON
REMEDIAL INVESTIGATION

		Former Washdown/Aqueous Degreaser Area						Former Washdown System Collection Tanks/Loading Dock Area							
	Preliminary Cleanup Levels	IT-Bldg1401-FootingExc5-SW(4.0) TB91B 06/23/2011	IT-Bldg1401-FootingExc5-B(6.0) TB91A 06/23/2011	IT-Bldg1401-Footing Exc8-B(2.5) TB68C 06/22/2011	IT-Bldg1401-FootingExc10-B(1.5) TC19A 06/24/2011	IT-Bldg1401-FootingExc14-B(4.0) TB68D 06/22/2011	IT-Bldg1401-FootingExc15-B(4.0) TB68A 06/22/2011	234 (2.5) 1/22/1988	234 (7.5) 1/22/1988	234 (12.5) 1/22/1988	234 (17.5) 1/22/1988	TDP14 (4) NY07K 11/4/2008	TDP15 (4) NY07L 11/4/2008	TDP16 (3) NY44A 11/5/2008	TDP17 (4) NY44B 11/5/2008
PAHs (µg/kg)															
Method SW8270D-SIM															
Naphthalene	2,100	28 U	4.5 U	**3.0** J	**8.2**	**15**	**11**								
2-Methylnaphthalene	320,000	28 U	4.5 U	4.6 U	**9.7**	**19**	**27**								
1-Methylnaphthalene	16,000	28 U	4.5 U	4.6 U	**5.1**	**19**	**19**								
Total Naphthalenes	---	28 U	4.5 U	**3.0** J	**23**	**53**	**57**								
Acenaphthene	230,000	28 U	4.5 U	2.5 U	**82**	4.8 U	4.9 U								
Fluorene	150,000	28 U	4.5 U	4.6 U	**74**	4.8 U	4.9 U								
Phenanthrene	---	**26** J	**5.0**	**6.4**	**110**	**26**	**480**								
Anthracene	1,600,000	28 U	4.5 U	4.6 U	**12**	4.8 U	**15**								
Fluoranthene	230,000	**23** J	**3.5** J	**5.9**	**27**	**14**	**190**								
Pyrene	240,000	**48**	**4.3** J	**5.6**	**21**	**14**	**130**								
Benzo(a)anthracene	---	**22** J	4.5 U	4.6 U	**4.4** J	**6.0**	**12**								
Chrysene	---	**100**	**3.4** J	**2.6** J	**5.9**	**11**	**18**								
Benzo(a)pyrene	---	**29**	4.5 U	4.6 U	4.7 U	4.8 U	**8.1**								
Indeno(1,2,3-cd)pyrene	---	28 U	4.5 U	4.6 U	4.7 U	**3.9** J	**5.2**								
Dibenz(a,h)anthracene	---	28 U	4.5 U	4.6 U	4.7 U	4.8 U	4.9 U								
Benzo(g,h,i)perylene	---	**84**	4.5 U	4.6 U	4.7 U	**4.1** J	**9.0**								
Dibenzofuran	80,000	28 U	4.5 U	4.6 U	**140**	**9.3**	**24**								
Total Benzofluoranthenes	---	28 U	**2.8** J	4.6 U	**7.2**	**10**	**16**								
cPAH TEQ	15	**32.2**	**0.314**	**0.026**	**1.219**	**2.1**	**11.6**								
PCBs (µg/kg)															
Method SW8082															
Aroclor 1254	0.29	32 U	32 U	32 U	32 U	31 U	31 U						32 U		
Aroclor 1260	5.4	32 U	32 U	32 U	32 U	31 U	31 U						32 U		
Total PCBs	1.8	ND	ND	ND	ND	ND	ND						ND		
TOTAL PETROLEUM HYDROCARBONS (mg/kg)															
NWTPH-HCID															
Diesel-Range Organics	---											50 U	50 U	50 U	50 U
Gasoline-Range Organics	---											**20**	**20**	20 U	20 U
Lube Oil	---											100 U	100 U	100 U	100 U
NWTPH-Dx															
Diesel-Range Organics	2,000	**29**	**5.6**	**6.0**	5.3 U	**10**	**6.9**								
Oil-Range Organics	2,000	**95**	10 U	10 U	11 U	11 U	**12**								
NWTPH-G															
Gasoline-Range Organics	100/30	**150**	7.3 U	5.7 U	5.5 U	7.0 U	6.1 U								

TABLE Q-6
SOIL ANALYTICAL DETECTS
SOUTH OF FORMER SLIP 5 AREA
BOEING ISAACSON-THOMPSON
REMEDIAL INVESTIGATION

		Former Washdown/Aqueous Degreaser Area						Former Washdown System Collection Tanks/Loading Dock Area							
	Preliminary Cleanup Levels	IT-Bldg1401-FootingExc5-SW(4.0) TB91B 06/23/2011	IT-Bldg1401-FootingExc5-B(6.0) TB91A 06/23/2011	IT-Bldg1401-Footing Exc8-B(2.5) TB68C 06/22/2011	IT-Bldg1401-FootingExc10-B(1.5) TC19A 06/24/2011	IT-Bldg1401-FootingExc14-B(4.0) TB68D 06/22/2011	IT-Bldg1401-FootingExc15-B(4.0) TB68A 06/22/2011	234 (2.5) 1/22/1988	234 (7.5) 1/22/1988	234 (12.5) 1/22/1988	234 (17.5) 1/22/1988	TDP14 (4) NY07K 11/4/2008	TDP15 (4) NY07L 11/4/2008	TDP16 (3) NY44A 11/5/2008	TDP17 (4) NY44B 11/5/2008
TOTAL METALS (mg/kg)															
Methods 200.8/7471A/SW7196A															
Barium	640	**48.6**	**34.7**	**42.0**	**38.0**	**35.7**	**33.0**								
Beryllium	160	0.2 U	0.2 U	0.2 U	0.2 U	0.2 U	0.2 U								
Cadmium	1.3	0.1 U	**0.2**	0.1 U	0.1 U	0.1 U	0.1 U					**0.6**	0.2 U	0.3 U	0.3 U
Chromium	1,480	**10.5**	**9.8**	**23.5**	**22**	**10.0**	**10.9**	**16**	**13**	**14**	**13**	**24.6**	**17.3**	**18.1**	**21.3**
Chromium VI	3.8	0.422 U	0.413 U	0.425 U	0.429 U	0.434 U	0.449 UJ								
Copper	36	**22.6**	**10.3**	**12.9**	**14.4**	**13.3**	**13.7**	**20**	**13**	**11**	**13**	**36.6**	**25.7**	**28.8**	**34.3**
Lead	250	**5.6**	**2.8**	**2.2**	**2.0**	**3.2**	**3.8**	**13**	**4**	**7**	**9**	**18**	**3**	**4**	**5**
Mercury	1.5	0.02 U	0.02 U	0.03 U	0.02 U	0.03 U	0.02 U					**0.13**	0.06 U	**0.05**	**0.11**
Nickel	210	**11.4**	**10.4**	**40.4**	**39.7**	**10.0**	**9.0**	**20**	**9**	**12**	**12**				
Zinc	1,400	**33**	**32**	**31**	**29**	**25**	**28**	**43.2**	**60.6**	**26.8**	**25.8**				
CONVENTIONALS (mg/kg)															
Oil and Grease	---														

TABLE Q-6
SOIL ANALYTICAL DETECTS
SOUTH OF FORMER SLIP 5 AREA
BOEING ISAACSON-THOMPSON
REMEDIAL INVESTIGATION

		Former Washdown System Collection Tanks/Loading Dock Area											
	Preliminary Cleanup Levels	TDP18 (4) NY44C 11/5/2008	TDP19 (4) NY44D 11/5/2008	IT-TOWPATHEXC2-B(.7) TE72A 07/19/2011	IT-TOWPATHEXC3-B(.7) TE72B 07/19/2011	IT-TOWPATHEXC4-B(.7) TE72C 07/19/2011	IT-TOWPATHEXC5-B(.7) TE72D 07/19/2011	IT-TOWPATHEXC6-B(.7) TE72E 07/19/2011	IT-TOWPATHEXC7-B(.7) TE72F 07/19/2011	IT-MW-8(2-3.5) TV99A 11/07/2011	IT-MW-8(5-6.5) TV99B 11/07/2011	IT-MW-8(8-9.5) TV99C 11/07/2011	IT-MW-8(14-15.5) TV99F 11/07/2011
VOLATILES (µg/kg)													
Method SW8260C													
Chloromethane	1,600	1.1 U	1 U	1.0 U	1.0 U	1.1 U	0.9 U	1.1 U	1.0 U	1.2 U	**0.7** J1	**0.7** J1	1.4 U
Vinyl Chloride	7.4	1.1 U	1 U	1.0 U	1.0 U	1.1 U	0.9 U	1.1 U	1.0 U	1.2 U	1.4 U	1.4 U	1.4 U
Methylene Chloride	2,400	2.1 U	2 U	**16**	**15**	**17**	**12**	**16**	**6.1**	**2.4** J1	**2.9**	**2.8**	**2.5** J1
Acetone	510,000	**22**	**77**	**37**	**44**	**46**	**29**	**72**	**47**	**9.9**	6.9 U	**47**	**41**
Carbon Disulfide	75,000	1.1 U	1 U	1.0 U	**4.0**	**1.9**	**4.7**	**2.9**	1.0 U	1.2 U	1.4 U	1.4 U	1.4 U
1,1-Dichloroethane	710	1.1 U	1 U	1.0 U	1.0 U	1.1 U	0.9 U	1.1 U	1.0 U	1.2 U	1.4 U	1.4 U	1.4 U
trans-1,2-Dichloroethene	19,000	1.1 U	1 U	1.0 U	1.0 U	1.1 U	0.9 U	1.1 U	1.0 U	1.2 U	1.4 U	1.4 U	1.4 U
cis-1,2-Dichloroethene	2,600	1.1 U	1 U	1.0 U	1.0 U	1.1 U	0.9 U	1.1 U	1.0 U	1.2 U	1.4 U	1.4 U	1.4 U
2-Butanone	430,000	5.3 U	**5.2**	4.8 U	5.2 U	5.5 U	4.7 U	**7.2**	5.0 U	6.1 U	6.9 U	6.8 U	6.8 U
1,1,1-Trichloroethane	1,900,000	1.1 U	1 U	1.0 U	1.0 U	1.1 U	0.9 U	1.1 U	1.0 U	1.2 U	1.4 U	1.4 U	1.4 U
Trichloroethene	51	1.1 U	1 U	1.0 U	1.0 U	1.1 U	0.9 U	1.1 U	1.0 U	1.2 U	1.4 U	1.4 U	1.4 U
Benzene	93	1.1 U	**1.3**	**0.6** J	**0.6** J	**0.6** J	**0.9** J	1.1 U	**1.3**	1.2 U	1.4 U	1.4 U	1.4 U
Tetrachloroethene	260	1.1 U	1 U	1.0 U	**5.6**	**9.1**	**1.1**	1.1 U	1.0 U	1.2 U	1.4 U	1.4 U	1.4 U
Toluene	100,000	1.1 U	1 U	**0.5** J	**1.0** J	**0.7** J	**0.7** J	**0.7** J	**0.6** J	1.2 U	1.4 U	1.4 U	1.4 U
Trichlorofluoromethane	200,000	1.1 U	1 U	1.0 U	1.0 U	1.1 U	0.9 U	1.1 U	1.0 U	1.2 U	1.4 U	1.4 U	1.4 U
m,p-Xylene	160,000	1.1 U	1 U	1.0 U	1.0 U	1.1 U	0.9 U	1.1 U	1.0 U	1.2 U	1.4 U	1.4 U	1.4 U
Methyl Iodide	---			1.0 U	1.0 U	1.1 U	0.9 U	1.1 U	1.0 U	1.2 U	**1.5**	**1.8**	**0.7** J1
1,2,4-Trimethylbenzene	800,000			1.0 U	1.0 U	1.1 U	0.9 U	1.1 U	1.0 U	1.2 U	1.4 U	1.4 U	1.4 U
sec-Butylbenzene	---			1.0 U	1.0 U	1.1 U	0.9 U	1.1 U	1.0 U	1.2 U	1.4 U	1.4 U	1.4 U
SEMIVOLATILES (µg/kg)													
Method SW8270D													
Phenol	1,900,000	62 U		18 U	19 U	18 U	19 U	**10** J	19 U	19 U	18 U	19 U	20 U
Benzyl Alcohol	8,000,000	62 U		18 U	**67**	18 U	19 U	18 U	19 U	19 U	18 U	19 U	20 U
4-Methylphenol	41,000	62 U		37 U	38 U	37 U	37 U	37 U	38 U	39 U	37 U	38 U	40 U
Benzoic Acid	9,000	620 U		370 U	380 U	370 U	370 U	370 U	380 U	390 U	370 U	380 U	400 U
Naphthalene	2,100	**110**		18 U	**10** J	18 U	**12** J	18 U	19 U	19 U	18 U	19 U	20 U
2-Methylnaphthalene	320,000	62 U		18 U	19 U	**16** J	19 U	**9.2** J	19 U	19 U	18 U	19 U	20 U
Acenaphthene	230,000	62 U		18 U	19 U	18 U	19 U	18 U	19 U	19 U	18 U	19 U	20 U
Dibenzofuran	80,000	62 U		18 U	19 U	**12** J	19 U	18 U	19 U	19 U	18 U	19 U	20 U
Fluorene	150,000	62 U		18 U	19 U	18 U	19 U	18 U	19 U	19 U	18 U	19 U	20 U
Phenanthrene	---	**120**		18 U	32 U	46 U	24 U	130 U	19 U	19 U	18 U	19 U	20 U
Anthracene	1,600,000	62 U		18 U	19 U	18 U	19 U	**18**	19 U	19 U	18 U	19 U	20 U
Fluoranthene	230,000	**150**		18 U	**49**	**85**	**28**	**160**	**16** J	19 U	18 U	19 U	20 U
Pyrene	240,000	**120**		18 U	**49**	**84**	**32**	**190**	**14** J	19 U	18 U	19 U	20 U
Butylbenzylphthalate	1,700	62 U		18 U	19 U	18 U	19 U	**21**	19 U	19 U	18 U	19 U	20 U
Benzo(a)anthracene	---	62 U		18 U	**26**	**38**	**14** J	**74**	19 U	19 U	18 U	19 U	20 U
bis(2-Ethylhexyl)phthalate	56,600	62 U		**16** J	**170**	**34**	**21** J	**45**	**15** J	31 U	140 U	74 U	22 UJ2
Chrysene	---	**91**		18 U	**38**	**75**	**22**	**120**	**12** J	19 U	18 U	19 U	20 U
Benzo(a)pyrene	---	62 U		18 U	**34**	**50**	**19**	**100**	**9.5** J	19 U	18 U	19 U	20 U
Indeno(1,2,3-cd)pyrene	---	62 U		18 U	**18** J	**19**	**11** J	**34**	19 U	19 U	18 U	19 U	20 U
Dibenz(a,h)anthracene	---	62 U		18 U	19 U	18 U	19 U	**13** J	19 U	19 U	18 U	19 U	20 U
Benzo(g,h,i)perylene	---	62 U		18 U	**26**	**23**	**15** J	**47**	19 U	19 U	**11** J1	19 U	20 U
1-Methylnaphthalene	16,000	62 U		18 U	19 U	**11** J	19 U	18 U	19 U	19 U	18 U	19 U	20 U
Total Benzofluoranthenes	---			18 U	**62**	**84**	**34**	**160**	**16** J	19 U	**14** J1	19 U	20 U
cPAH TEQ	15	**1**		ND	**45** J	**65**	**25** J	**128**	**11** J	ND	**1.4** J	ND	ND

TABLE Q-6
SOIL ANALYTICAL DETECTS
SOUTH OF FORMER SLIP 5 AREA
BOEING ISAACSON-THOMPSON
REMEDIAL INVESTIGATION

		Former Washdown System Collection Tanks/Loading Dock Area											
	Preliminary Cleanup Levels	TDP18 (4) NY44C 11/5/2008	TDP19 (4) NY44D 11/5/2008	IT-TOWPATHEXC2-B(.7) TE72A 07/19/2011	IT-TOWPATHEXC3-B(.7) TE72B 07/19/2011	IT-TOWPATHEXC4-B(.7) TE72C 07/19/2011	IT-TOWPATHEXC5-B(.7) TE72D 07/19/2011	IT-TOWPATHEXC6-B(.7) TE72E 07/19/2011	IT-TOWPATHEXC7-B(.7) TE72F 07/19/2011	IT-MW-8(2-3.5) TV99A 11/07/2011	IT-MW-8(5-6.5) TV99B 11/07/2011	IT-MW-8(8-9.5) TV99C 11/07/2011	IT-MW-8(14-15.5) TV99F 11/07/2011
PAHs (µg/kg)													
Method SW8270D-SIM													
Naphthalene	2,100			**2.5** J	**5.8**	**11**	**14**	**16**	**7.7**	**2.6** J1	**3.2** J1	**2.8** J1	**3.0** J1
2-Methylnaphthalene	320,000			**3.2** J	**6.1**	**15**	**14**	**25**	**5.2**	4.8 U	**2.5** J1	4.8 U	**3.0** J1
1-Methylnaphthalene	16,000			**2.5** J	**3.8** J	**11**	**10**	**16**	**4.6** J	4.8 U	**2.4** J1	4.8 U	**3.6** J1
Total Naphthalenes	---									**2.6** J1	**8.1** J1	**2.8** J1	**9.6** J1
Acenaphthene	230,000			4.6 U	4.7 U	**18**	**16**	**31**	4.8 U	4.8 U	4.7 U	4.8 U	5.0 U
Fluorene	150,000			4.6 U	4.7 U	**12**	**18**	**23**	4.8 U	4.8 U	4.7 U	4.8 U	5.0 U
Phenanthrene	---			4.8 U	**24**	**79**	**230**	**150**	20 U	**3.4** J1	**5.4**	**3.3** J1	**5.5**
Anthracene	1,600,000			4.6 U	**3.9** J	**18**	**92**	**28**	4.8 U	4.8 U	4.7 U	4.8 U	5.0 U
Fluoranthene	230,000			**3.0** J	**49**	**200**	**350**	**180**	**21**	**3.1** J1	**4.5** J1	**2.9** J1	5.0 U
Pyrene	240,000			**2.6** J	**38**	**140**	**230**	**150**	**15**	**2.7** J1	**3.8** J1	4.8 U	5.0 U
Benzo(a)anthracene	---			4.6 U	**25**	**88**	**150**	**71**	**5.8**	4.8 U	4.7 U	4.8 U	5.0 U
Chrysene	---			4.6 U	**38**	**120**	**150**	**110**	**11**	**2.9** J1	**4.4** J1	4.8 U	5.0 U
Benzo(a)pyrene	---			4.6 U	**39**	**100**	**160**	**96**	**6.9**	**4.0** J1	**4.0** J1	4.8 U	5.0 U
Indeno(1,2,3-cd)pyrene	---			4.6 U	**19**	**31**	**40**	**28**	**3.6** J	**4.2** J1	**4.5** J1	4.8 U	5.0 U
Dibenz(a,h)anthracene	---			4.6 U	**6.8**	**13**	**15**	**9.9** J	4.8 U	**3.2** J1	4.7 U	4.8 U	5.0 U
Benzo(g,h,i)perylene	---			4.6 U	**27**	**36**	**42**	**41**	**4.8**	**6.0**	**7.5**	4.8 U	5.0 U
Dibenzofuran	80,000			4.6 U	**5.3**	**14**	**16**	**13** J	**4.4** J	4.8 U	4.7 U	4.8 U	5.0 U
Total Benzofluoranthenes	---			4.6 U	**70**	**220**	**290**	**180**	**19**	**3.4** J1	4.7 U	4.8 U	5.0 U
cPAH TEQ	15			ND	**51**	**136**	**211**	**126**	**9.9**	**5.1** J	**4.5** J	ND	ND
PCBs (µg/kg)													
Method SW8082													
Aroclor 1254	0.29	32 U		31 U	**28** J	**88**	32 U	**53**	33 U	33 U	31 U	32 U	32 U
Aroclor 1260	5.4	32 U		31 U	32 U	32 U	32 U	32 U	33 U	33 U	31 U	32 U	32 U
Total PCBs	1.8	ND		ND	**28** J	**88**	ND	**53**	ND	ND	ND	ND	ND
TOTAL PETROLEUM HYDROCARBONS (mg/kg)													
NWTPH-HCID													
Diesel-Range Organics	---	50 U	50 U										
Gasoline-Range Organics	---	20 U	20 U										
Lube Oil	---	100 U	**100**										
NWTPH-Dx													
Diesel-Range Organics	2,000		**23**	5.5 U	**24**	**53**	**19**	**85**	**7.9**	5.2 U	5.4 U	5.7 U	6.0 U
Oil-Range Organics	2,000		**110**	11 U	**150**	**300**	**89**	**510**	**15**	**13**	**13**	11 U	12 U
NWTPH-G													
Gasoline-Range Organics	100/30			5.5 U	6.1 U	5.6 U	6.2 U	8.8 U	5.7 U	**24**	**6.9**	6.3 U	8.3 U

TABLE Q-6
SOIL ANALYTICAL DETECTS
SOUTH OF FORMER SLIP 5 AREA
BOEING ISAACSON-THOMPSON
REMEDIAL INVESTIGATION

		Former Washdown System Collection Tanks/Loading Dock Area											
	Preliminary Cleanup Levels	TDP18 (4) NY44C 11/5/2008	TDP19 (4) NY44D 11/5/2008	IT-TOWPATHEXC2-B(.7) TE72A 07/19/2011	IT-TOWPATHEXC3-B(.7) TE72B 07/19/2011	IT-TOWPATHEXC4-B(.7) TE72C 07/19/2011	IT-TOWPATHEXC5-B(.7) TE72D 07/19/2011	IT-TOWPATHEXC6-B(.7) TE72E 07/19/2011	IT-TOWPATHEXC7-B(.7) TE72F 07/19/2011	IT-MW-8(2-3.5) TV99A 11/07/2011	IT-MW-8(5-6.5) TV99B 11/07/2011	IT-MW-8(8-9.5) TV99C 11/07/2011	IT-MW-8(14-15.5) TV99F 11/07/2011
TOTAL METALS (mg/kg)													
Methods 200.8/7471A/SW7196A													
Barium	640			**33.3**	**52.0**	**55.0**	**62.0**	**63.7**	**45.2**	**26.8**	**45.8**	**41.4**	**36.6**
Beryllium	160			0.2 U	**0.2**	**0.2**	**0.2** U	**0.2**	**0.3**	0.2 U	0.2 U	0.2 U	0.3 U
Cadmium	1.3	**0.6**	0.3 U	0.1 U	**0.1**	**0.2**	**0.2**	**0.2**	0.1 U	0.1 U	0.1 U	0.1 U	0.1 U
Chromium	1,480	**26.1**	**12.9**	**11.2**	**16.0**	**17.9**	**21.4**	**16.4**	**13.4**	**8.9**	**12.5**	**11.8**	**13.9**
Chromium VI	3.8			0.445 U	0.441 U	0.428 U	0.450 U	0.436 U	0.456 U	0.419 U	0.438 U	0.467 U	0.524 U
Copper	36		**16.4**	**13.9**	**22.8**	**24.6**	**18.5**	**24.6**	**18.4**	**14.8**	**22.1**	**17.4**	**14.9**
Lead	250	**28**	**30**	**2.1**	**9.8**	**12.8**	**7.6**	**12.2**	**5.8**	**3.5**	**4.4**	**2.3**	**1.8**
Mercury	1.5	**0.23**	**0.07**	0.02 U	**0.03**	**0.04**	**0.03**	**0.03**	**0.04**	0.02 U	0.02 U	0.02 U	0.02 U
Nickel	210			**13**	**24.2**	**27.5**	**23.0**	**22.4**	**16.5**	**9.0**	**11.6**	**10.3**	**8.6**
Zinc	1,400			**25**	**48**	**55**	**44**	**58**	**32**	**26**	**36**	**70**	**27**
CONVENTIONALS (mg/kg)													
Oil and Grease	---												

TABLE Q-6
SOIL ANALYTICAL DETECTS
SOUTH OF FORMER SLIP 5 AREA
BOEING ISAACSON-THOMPSON
REMEDIAL INVESTIGATION

		Vicinity of I-206(s)					Other West of Building					
	Preliminary Cleanup Levels	IT-TP-101-B(12-13) TT59A 10/24/2011	IT-TP-102-B(13-14) TT67B 10/25/2011	IT-TP-103-SWE(5-6) TT67C 10/25/2011	IT-TP-103-SWE(6-7) TT67D 10/25/2011	IT-TP-103-SWE(12-13) TT67E 10/25/2011	21 (1.5) 8/1/1983	21 (8.5) 8/1/1983	240 (2.5) 1/22/1988	240 (7.5) 1/22/1988	240 (12.5) 1/22/1988	240 (17.5) 1/22/1988
VOLATILES (µg/kg)												
Method SW8260C												
Chloromethane	1,600	1.3 U	1.3 U	1.3 U	1.4 U	1.3 U						
Vinyl Chloride	7.4	1.3 U	1.3 U	1.3 U	1.4 U	1.3 U						
Methylene Chloride	2,400	**2.6**	2.7 U	2.6 U	2.8 U	2.6 U						
Acetone	510,000	**25**	**22**	**45**	**72**	**18**						
Carbon Disulfide	75,000	1.3 UJ	1.3 U	1.3 U	1.4 U	1.3 U						
1,1-Dichloroethane	710	1.3 U	1.3 U	1.3 U	1.4 U	1.3 U						
trans-1,2-Dichloroethene	19,000	1.3 U	1.3 U	1.3 U	1.4 U	1.3 U						
cis-1,2-Dichloroethene	2,600	1.3 U	1.3 U	1.3 U	1.4 U	1.3 U						
2-Butanone	430,000	6.6 U	6.7 U	6.5 U	6.9 U	6.6 U						
1,1,1-Trichloroethane	1,900,000	1.3 U	1.3 U	1.3 U	1.4 U	1.3 U						
Trichloroethene	51	1.3 UJ	1.3 U	1.3 U	1.4 U	1.3 U						
Benzene	93	1.3 UJ	1.3 U	**2.1**	**1.6**	1.3 U						
Tetrachloroethene	260	1.3 UJ	1.3 U	1.3 U	1.4 U	1.3 U						
Toluene	100,000	1.3 UJ	1.3 U	1.3 U	**1.5**	1.3 U						
Trichlorofluoromethane	200,000	1.3 U	1.3 U	1.3 U	1.4 U	1.3 U						
m,p-Xylene	160,000	1.3 UJ	1.3 U	1.3 U	1.4 U	1.3 U						
Methyl Iodide	---	1.3 U	1.3 U	1.3 U	1.4 U	1.3 U						
1,2,4-Trimethylbenzene	800,000	1.3 UJ	1.3 U	1.3 U	1.4 U	1.3 U						
sec-Butylbenzene	---	1.3 UJ	1.3 U	1.3 U	1.4 U	1.3 U						
SEMIVOLATILES (µg/kg)												
Method SW8270D												
Phenol	1,900,000	19 U	19 U	18 U	19 U	**12** J1						
Benzyl Alcohol	8,000,000	19 U	19 U	18 U	19 U	20 U						
4-Methylphenol	41,000	38 U	39 U	37 U	38 U	39 U						
Benzoic Acid	9,000	380 UJ	390 UJ	370 UJ	380 UJ	390 UJ						
Naphthalene	2,100	19 U	19 U	**60**	**64**	20 U						
2-Methylnaphthalene	320,000	19 U	19 U	**15** J1	**44**	20 U						
Acenaphthene	230,000	19 U	19 U	18 U	19 U	20 U						
Dibenzofuran	80,000	19 U	19 U	**12** J1	**16** J1	20 U						
Fluorene	150,000	19 U	19 U	18 U	19 U	20 U						
Phenanthrene	---	19 U	19 U	**66**	**77**	20 U						
Anthracene	1,600,000	19 U	19 U	18 U	19 U	20 U						
Fluoranthene	230,000	19 U	19 U	**73**	**69**	20 U						
Pyrene	240,000	19 U	19 U	**72**	**68**	20 U						
Butylbenzylphthalate	1,700	19 U	19 U	18 U	19 U	20 U						
Benzo(a)anthracene	---	19 U	19 U	**25**	**21**	20 U						
bis(2-Ethylhexyl)phthalate	56,600	24 U	24 U	23 U	30 U	35 U						
Chrysene	---	19 U	19 U	**54**	**46**	20 U						
Benzo(a)pyrene	---	19 U	19 U	**54**	**23**	20 U						
Indeno(1,2,3-cd)pyrene	---	19 U	19 U	**110**	**26**	20 U						
Dibenz(a,h)anthracene	---	19 U	19 U	**14** J1	19 U	20 U						
Benzo(g,h,i)perylene	---	19 U	19 U	**240**	**47**	20 U						
1-Methylnaphthalene	16,000	19 U	19 U	**11** J1	**28**	20 U						
Total Benzofluoranthenes	---	19 U	19 U	**140**	**61**	20 U						
cPAH TEQ	15	ND	ND	**82** J	**34**	ND						

TABLE Q-6
SOIL ANALYTICAL DETECTS
SOUTH OF FORMER SLIP 5 AREA
BOEING ISAACSON-THOMPSON
REMEDIAL INVESTIGATION

		Vicinity of I-206(s)					Other West of Building					
	Preliminary Cleanup Levels	IT-TP-101-B(12-13) TT59A 10/24/2011	IT-TP-102-B(13-14) TT67B 10/25/2011	IT-TP-103-SWE(5-6) TT67C 10/25/2011	IT-TP-103-SWE(6-7) TT67D 10/25/2011	IT-TP-103-SWE(12-13) TT67E 10/25/2011	21 (1.5) 8/1/1983	21 (8.5) 8/1/1983	240 (2.5) 1/22/1988	240 (7.5) 1/22/1988	240 (12.5) 1/22/1988	240 (17.5) 1/22/1988
PAHs (µg/kg)												
Method SW8270D-SIM												
Naphthalene	2,100	**2.6** J1	**3.2** J1	**55**	**110**	**2.7** J1						
2-Methylnaphthalene	320,000	4.7 U	4.6 U	**14**	**94**	4.8 U						
1-Methylnaphthalene	16,000	4.7 U	4.6 U	**9.9**	**72**	4.8 U						
Total Naphthalenes	---	**2.6**	**3.2** J1	**78.9**	**276**	**2.7** J1						
Acenaphthene	230,000	4.7 U	4.6 U	**3.5** J1	**19**	4.8 U						
Fluorene	150,000	4.7 U	4.6 U	**2.6** J1	**4.8**	4.8 U						
Phenanthrene	---	**5.0**	**4.4** J1	**69**	**120**	**4.6** J1						
Anthracene	1,600,000	4.7 U	4.6 U	**71**	**120**	4.8 U						
Fluoranthene	230,000	**3.0** J1	4.6 U	**83**	**110**	4.8 U						
Pyrene	240,000	**3.3** J1	4.6 U	**70**	**95**	4.8 U						
Benzo(a)anthracene	---	4.7 U	4.6 U	**26**	**35**	4.8 U						
Chrysene	---	4.7 U	4.6 U	**53**	**69**	4.8 U						
Benzo(a)pyrene	---	4.7 U	4.6 U	**40**	**34**	4.8 U						
Indeno(1,2,3-cd)pyrene	---	4.7 U	4.6 U	**70**	**40**	4.8 U						
Dibenz(a,h)anthracene	---	4.7 U	4.6 U	**17**	**12**	4.8 U						
Benzo(g,h,i)perylene	---	4.7 U	4.6 U	**130**	**67**	4.8 U						
Dibenzofuran	80,000	4.7 U	4.6 U	**12**	**30**	4.8 U						
Total Benzofluoranthenes	---	4.7 U	4.6 U	**100**	**90**	4.8 U						
cPAH TEQ	15	ND	ND	**62**	**52**	ND						
PCBs (µg/kg)												
Method SW8082												
Aroclor 1254	0.29	33 U	34 U	37 U	29 U	36 U						
Aroclor 1260	5.4	33 U	34 U	37 U	29 U	36 U						
Total PCBs	1.8	ND	ND	ND	ND	ND	100 U					
TOTAL PETROLEUM HYDROCARBONS (mg/kg)												
NWTPH-HCID												
Diesel-Range Organics	---											
Gasoline-Range Organics	---											
Lube Oil	---											
NWTPH-Dx												
Diesel-Range Organics	2,000	6.5 U	6.8 U	**11**	**15**	6.8 U						
Oil-Range Organics	2,000	13 U	14 U	**58**	**57**	14 U						
NWTPH-G												
Gasoline-Range Organics	100/30	8.3 U	8.8 U	8.1 U	5.1 U	8.9 U						

TABLE Q-6
SOIL ANALYTICAL DETECTS
SOUTH OF FORMER SLIP 5 AREA
BOEING ISAACSON-THOMPSON
REMEDIAL INVESTIGATION

		Vicinity of I-206(s)					Other West of Building					
	Preliminary Cleanup Levels	IT-TP-101-B(12-13) TT59A 10/24/2011	IT-TP-102-B(13-14) TT67B 10/25/2011	IT-TP-103-SWE(5-6) TT67C 10/25/2011	IT-TP-103-SWE(6-7) TT67D 10/25/2011	IT-TP-103-SWE(12-13) TT67E 10/25/2011	21 (1.5) 8/1/1983	21 (8.5) 8/1/1983	240 (2.5) 1/22/1988	240 (7.5) 1/22/1988	240 (12.5) 1/22/1988	240 (17.5) 1/22/1988
TOTAL METALS (mg/kg)												
Methods 200.8/7471A/SW7196A												
Barium	640	**37.4**	**31**	**202**	**158**	**27.0**	**31**	**18**				
Beryllium	160	0.3 U	0.3 U	0.2 U	**0.3**	0.3 U						
Cadmium	1.3	0.1 U	0.1 U	**0.4**	**0.2**	0.1 U	**0.41**	**0.3**				
Chromium	1,480	**12.0**	**11.7**	**14.3**	**13.3**	**9.4**	**8.2**	**8.5**	**17**	**14**	**16**	**15**
Chromium VI	3.8	0.550 U	0.540 U	0.480 U	0.473 U	0.531 U						
Copper	36	**18.9**	**14.1**	**48.4**	**62.8**	**16.8**			**22**	**19**	**18**	**15**
Lead	250	**2.3**	**1.7**	**90.5**	**49.9**	**1.7**	**5.5**	**4**	**13**	**7**	**10**	**9**
Mercury	1.5	0.02 U	0.03 U	**0.05**	**0.10**	0.03 U	0.03 U	0.03 U				
Nickel	210	**9.0**	**7.9**	**15.2**	**15.1**	**6.0**	**9.3**	**7**	**16**	**11**	**13**	**13**
Zinc	1,400	**25**	**25**	**150**	**99**	**22**	**18**	**12.5**	**36.6**	**29.6**	**33**	**29**
CONVENTIONALS (mg/kg)												
Oil and Grease	---						**55**	**110**				

TABLE Q-6
SOIL ANALYTICAL DETECTS
SOUTH OF FORMER SLIP 5 AREA
BOEING ISAACSON-THOMPSON
REMEDIAL INVESTIGATION

µg/kg = micrograms per kilogram
mg/kg = milligrams per kilogram
TEQ = Toxic Equivalent Concentration
SIM = Select Ion Monitoring
cPAH = Carcinogenic Polycyclic Aromatic Hydrocarbons
PCB = Polychlorinated Biphenyls
NWTPH-Dx = Total Petroleum Hydrocarbon-Diesel Range
NWTPH-G = Total Petroleum Hydrocarbon-Gasoline Range
NWTPH-HCID = Total Petroleum Hydrocarbon-Hydrocarbon Identification Method
U = Indicates the compound was not detected at or above the reporting limit.
UJ = The analyte was not detected in the sample; the reported sample reporting limit is an estimate.
J = Indicates the analyte was positively identified; the associated numerical value is the approximate concentration of the analyte in the sample.
J1 = Laboratory flag indicating the analyte was positively identified; the associated concentration is approximate and less than the reporting limit, but equal to or greater than the detection limit.
UJ2 = The analyted was not detected in the sample at or above the numerical value shown; the numerical value is below the reporting limit, but greater than the detection limit.
ND = Not Detected.
Bold = Detection
Box = Exceeds Preliminary Cleanup Level.

(a) The area limits for internal standards perylene-dl2 and di-n-octylphthalate were above the control limits for the original SVOC analysis of sample IT-Bldg1401-Trench-4S-110512. The sample was reanalyzed at a dilution with all internal standards in control. The original analysis results are reported.
(b) The area limit for laboratory internal standard perylene-dl2 was above the control limit for the original SVOC analysis of sample ITBldg1401-Trench5N-110513. The sample was reanalyzed at a dilution with all internal standards in control. The original analysis results are reported.

APPENDIX R

Storm Drain System Evaluation/Source Material Sampling Technical Memorandum

DRAFT
TECHNICAL MEMORANDUM

LANDAU ASSOCIATES
ENVIRONMENTAL | GEOTECHNICAL | NATURAL RESOURCES

TO: James Bet, The Boeing Company

FROM: Stacy Lane, L.G. and Kristy J. Hendrickson, P.E.

DATE: June 15, 2012

RE: STORM DRAIN SYSTEM EVALUATION
BOEING ISAACSON-THOMPSON SITE
TUKWILA, WASHINGTON

This technical memorandum presents an evaluation of the results for solids collected from storm drain structures at the Boeing Isaacson-Thompson site (Site) in Tukwila, Washington and for stormwater samples collected from the storm drain system near outfalls A and B. The evaluation is based on storm drain solids and stormwater samples collected as part of a remedial investigation (RI) being conducted at the Site. The evaluation includes the following:

- A comparison of analytical results for 36 storm drain solids samples collected in September 2011 to Sediment Management Standards (SMS) criteria
- A comparison of the September 2011 storm drain solids analytical results to analytical results for source material samples collected in April 2012
- A comparison of analytical results for stormwater samples to surface water quality screening criteria

EVALUATION OF STORM DRAIN SOLIDS RESULTS

In September 2011, 36 samples of the solids present in the storm drain structures were collected and submitted for laboratory analysis. The analytical results were tabulated and included as an attachment to the September 2011 Progress Report submitted to the Washington State Department of Ecology (Ecology) on October 15, 2011 (Boeing 2011). The data were compared to SMS criteria to evaluate the potential for storm drains solids, if they were transported to the Lower Duwamish Waterway (LDW), to impact sediment. The comparison indicated metals, polychlorinated biphenyls (PCBs), and semivolatile compounds (SVOCs), primarily phthalates and benzyl alcohol, were present in some solids at concentrations exceeding the SMS criteria. The analytical results and the comparison to the SMS criteria were documented in a sampling and analysis plan prepared by Landau Associates to identify potential sources of these contaminants (Landau Associates 2012). The locations of the storm drain structures where metals, PCBs, and benzyl alcohol concentrations exceeded SMS criteria are presented on Figures 1, 2, and 3, respectively.

As shown on Figures 1 and 2, metals (cadmium, chromium, mercury, and zinc) and PCBs were detected at concentrations exceeding the SMS criteria in samples from catch basins located around Building 14-01 and in five other areas identified as Building 14-12 Area, Building 14-02/14-03 Area, West Isaacson Area, East Isaacson Area, and Former Building 14-15 Area.

EVALUATION OF POTENTIAL CONTAMINANT SOURCES TO STORM DRAIN SOLIDS

In April 2012, samples of various media present at the Site that could be a potential source of the contaminants present in the storm drain solids were collected for laboratory analysis. The media sampled included surface debris, paint chips, and concrete joint material (CJM). At locations where these media were not present, storm drain system solids were collected from the structure where contaminants were previously present in the solids at concentrations exceeding the SMS criteria. Immediately following collection of the 36 storm drain solids in September 2011, solids present in the storm drain structures were removed; therefore, the storm drain solids samples collected in April 2012 represent solids collected in the structures since September 2011. The source material sampling was conducted in accordance with the Ecology-approved Remedial Investigation/Feasibility Study (RI/FS) work plan (Landau Associates 2011) and the Source Material Sampling and Analysis Plan Technical Memorandum (Landau Associates 2012). Potential source material samples were analyzed for constituents that exceeded the SMS criteria in the 2011 storm drain system solids. Source materials were sampled in the eight general site areas listed below:

- 14-01 Building South
- 14-01 Building East
- 14-01 Building North
- 14-01 Building West
- 14-13 Building
- 14-02/14-03 Building
- Isaacson East
- Isaacson West.

These general areas and source material sampling locations are shown on Figure 1. Source material sample descriptions are provided in Table 1. Each of the general site areas listed above was inspected by field personnel prior to sampling to identify potential source materials and sampling locations. Sample collection procedures for each of the sampling media and investigation results are described in the following sections.

Concrete Joint Material

Due to the potential presence of asbestos in the CJM (based on the findings of a pre-field asbestos determination evaluation performed by the Boeing Asbestos Abatement team), CJM was sampled with the assistance of the Boeing Asbestos Abatement team. CJM was removed using a knife with a removable blade. The sharp end of the blade was used to cut out the CJM, and the sample was placed into an 8-oz. glass sample jar, labeled, and stored on ice. Blades used for removing CJM material were disposed of after use at each specific sample location.

Paint Chip Sampling

Paint from building or equipment surfaces was sampled following inspection by field personnel. Field personnel identified areas were exterior building paint was peeling off from the surface based on the potential for the peeling or chipping paint to fall off and potentially enter the storm drain system. Pieces of paint were removed from exterior building surfaces using a wedged chisel. Field personnel attempted not to damage building siding or equipment surfaces. The pieces of paint were placed into an 8-oz. glass sample jar, labeled, and stored on ice. The chisel-type tool used for removing paint was decontaminated between each sample location.

Surface Debris

Surface debris (e.g., soil, fine particulates, and organic debris) was sampled from areas where it appeared likely to be potentially transported to storm drain structures during rain events. Surface debris was swept together and collected using a new clean broom and/or a clean stainless steel spoon. Surface debris was placed into an 8-oz. glass sample jar, labeled, and stored on ice. Disposable sample equipment (brooms, etc.) was discarded after use at a specific sample location. Other sampling equipment was decontaminated between each sample location.

Storm Drain Solids

Storm drain solids were collected from storm drain structures in locations where surface debris or other source materials were not present to sample. Storm drain solids samples were collected using a telescoping sample pole with a glass sample jar affixed to the end. As much water was decanted from the sample as possible and the solids were transferred into an 8-oz. glass sample jar. The sample pole was advanced into the storm drain structure multiple times to collect enough solids for laboratory analysis. In some cases, solids from multiple storm drain structures were composited into a single sample to allow for

sufficient sample volume. The 8-oz. glass sample jar was labeled, and stored on ice. The sample pole was decontaminated between each sample location.

Source Material Sample Results

Surface debris, paint chips, and storm drain structure solids were analyzed for SVOCs, polycyclic aromatic hydrocarbons (PAHs), PCBs, and metals. CJM was analyzed for SVOCs, PAHs, and PCBs. Source material data for samples collected in each of the eight areas (14-01 Building South, 14-01 Building East, 14-01 Building North, 14-01 Building West, 14-13 Building, 14-02/14-03 Building, Isaacson East, and Isaacson West) are presented in Tables 2 through 9, respectively, along with the 2011 storm drain structure data in each area to allow for direct data comparison. The laboratory reported concentrations detected below the reporting limit (RL) but above the method detection limit (MDL) are included in Tables 2 through 9. If a constituent was not detected above the MDL, the constituent is considered to be not detected and the reporting limit is shown on the table with a "U" flag.

14-01 Building South, East, and West Areas

At the time of the source material sampling, surface debris was not present in these areas. Due to the lack of potential sources, solids present in the storm drain structures in these areas were sampled and analyzed to evaluate the current quality of the solids relative to the SMS criteria. Data for the 14-01 Building South, East, and West Areas are presented in Tables 2, 3, and 5, respectively. Results for 2011 storm drain solids sampling in these areas indicate that benzyl alcohol; butylbenzylphthalate; 2,4-dimethylphenol (south area only); dimethylphthalate (east and west areas only); bis(2-ethylhexyl)phthalate; n-nitroso-di-n-propylamine (east area only); phenol (east and west areas only); PAHs; PCBs; cadmium; zinc; and mercury (east area only) were present in the storm drain solids at concentrations exceeding the SMS criteria.

In the 14-01 South and East Areas, as shown in Tables 2 and 3, the concentrations of bis(2-ethylhexyl)phthalate, PAHs, and PCBs were higher in the recent solids samples than in the solids samples collected in September 2011. Concentrations of cadmium and zinc in the solids samples collected from the south area were less than the concentrations detected in September 2011 but exceed the SMS criteria. Concentrations of cadmium and zinc in the solids samples collected from the east area were similar or higher than the concentrations detected in September 2011. The concentrations of mercury in the solids samples collected from the south and east areas do not exceed in the SMS criteria.

In the 14-01 West Area, the only SVOC detected in the recent solids sampling at a concentration exceeding SMS criteria was 4-methylphenol. Similar to results from the South and East areas, the

concentrations of PAHs were higher in the recent solids samples than in the solids samples collected in September 2011, and the concentrations of PCBs were slightly lower. Concentrations of cadmium and zinc were similar or lower compared to the concentrations in solids samples collected in September 2011, and mercury was detected above the SMS criteria in one of the solids samples in this area.

14-01 Building North Area

Three surface debris samples were collected in the 14-01 Building North Area. Data for the 14-01 Building North Area are presented in Table 4. Results from 2011 storm drain solids sampling in this area indicate that benzyl alcohol; butylbenzylphthalate; 2,4-dimethylphenol; bis(2-ethylhexyl)phthalate; 4-methylphenol; PAHs; PCBs; zinc; and mercury were present in the storm drain solids at concentrations exceeding the SMS criteria.

The surface debris analytical results in this area indicate that surface debris in this area may be a source of PCBs, bis(2-ethylhexyl) phthalate, PAHs, and zinc present in the storm drain solids; however, the zinc concentrations in the surface debris samples were significantly less than the zinc concentrations detected in the storm drain solids. The mercury concentrations detected in the surface debris were significantly less than the mercury concentration in the 2011 catch basin solid sample that exceeded the SMS criteria. Benzyl alcohol; butylbenzylphthalate; 2,4-dimethylphenol; and 4-methylphenol were not detected above the MDL or the RL in the surface debris solids.

14-13 Building Area

One paint chip and one surface debris sample were collected from the 14-13 Building Area. Data for the 14-13 Building Area are presented in Table 6. Results from 2011 storm drain solids sampling in this area indicate that benzyl alcohol, butylbenzylphthalate, di-n-butylphthalate, dimethylphthalate, bis(2-ethylhexyl)phthalate, pentachlorophenol, phenol, PAHs, PCBs, cadmium, and zinc were present in the storm drain solids at concentrations exceeding the SMS criteria.

The paint chip sample (PAINT-06) was collected from peeling paint on the exterior of the 14-13 Building (see Table 1). The analytical results indicate that the paint may be a source of PCBs, cadmium, and zinc present in the storm drain solids. Analytical results for the surface debris indicate that the surface debris in this area may also be a contributing source of PCBs, cadmium, and zinc, and may be a source of bis(2-ethylhexyl)phthalate, pentachlorophenol, and PAHs detected in the storm drain solids. Benzyl alcohol, butylbenzylphthalate, di-n-butylphthalate, dimethylphthalate, and phenol were not detected above the MDL or RL in the paint chip and surface debris samples.

14-02/14-03 Building Area

Four surface debris samples and five paint chip samples were collected from the 14-02/14-03 Building Area. Data for the 14-02/14-03 Building Area is presented in Table 7. Results from 2011 storm drain solids sampling in this area indicate that benzyl alcohol, butylbenzylphthalate, dimethylphthalate, bis(2-ethylhexyl)phthalate, 4-methylphenol, phenol, PAHs, PCBs, cadmium, mercury, and zinc were present in the storm drain solids at concentrations exceeding the SMS criteria.

Paint chip samples in this area were collected from a variety of structures with peeling or degrading paint (see Table 1), including bollards (PAINT-01 and PAINT-02), a conex box located north of the 14-02 Building with multiple layers of beige and red paint (PAINT-03), a conex box located west of the 14-02 Building with multiple layers of beige and green paint (PAINT-04), and the exterior south wall of the 14-02 Building (PAINT-05). The analytical results for these samples indicate that the paint on the bollards and conex boxes may be a contributing source of the PCBs in the storm drain solids; however, the highest PCB concentrations were detected in the paint chips collected from the exterior wall of the 14-02 Building. The results also indicate that the paint from the bollards, conex boxes, and exterior wall of the 14-02 Building may be a contributing source of cadmium, mercury, and zinc; however, the highest concentration of zinc was detected in the paint chip sample collected from the conex box located north of the building and the mercury concentration detected in the paint chip from the exterior building wall was several orders of magnitude higher than the other paint chip samples. The analytical results do not suggest that the paint is a significant source of SVOCs and PAHs, except for bis(2-ethylhexyl)phthalate. No SVOCs or PAHs were detected in the paint chip sample collected from the exterior building wall.

The analytical results for the surface debris samples indicate that surface debris present in this area may be a contributing source of PCBs, bis(2-ethylhexyl)phthalate, and metals and a potential source of PAHs. Except for bis(2-ethylhexyl)phthalate, SVOCs were not generally detected in the surface debris samples at concentrations above the MDL or RL.

Isaacson East

Four surface debris samples and one CJM sample were collected from the Isaacson East Area. Data for the Isaacson East Area are presented in Table 8. Results from 2011 storm drain solids sampling in this area indicate that benzoic acid, benzyl alcohol, butylbenzylphthalate, bis(2-ethylhexyl)phthalate,4-methylphenol, PAHs, PCBs, chromium, and zinc were detected in the storm drain solids at concentrations exceeding the SMS criteria.

The analytical results for these samples indicate that CJM present in this area may be a source of PCBs, bis(2-ethylhexyl)phthalate, and PAHs present in the storm drain solids and that surface debris present in this area may be a contributing source of PCBs and bis(2-ethylhexyl)phthalate, as well as a source of chromium and zinc. Benzoic acid, benzyl alcohol, butylbenzylphthalate, and 4-methylphenol were not detected above the MDL or the RL in the CJM and surface debris solids.

Isaacson West

Four surface debris samples and one CJM sample were collected from the Isaacson West Area. Data for the Isaacson West Area is presented in Table 9. Results from 2011 storm drain solids sampling in this area indicate that benzoic acid, benzyl alcohol, butylbenzylphthalate, bis(2-ethylhexyl)phthalate, PCBs, cadmium, chromium, and zinc were detected in the storm drain solids at concentrations exceeding the SMS criteria.

The analytical results for these samples indicate that CJM present in this area may be a source of PCBs in the storm drain solids and that surface debris present in this area may be a contributing source of the PCBs, as well as a source of the bis(2-ethylhexyl)phthalate, cadmium, chromium, and zinc contamination. Benzoic acid, benzyl alcohol, and butylbenzylphthalate were not detected above the MDL or the RL in the CJM and surface debris solids.

STORMWATER QUALITY

Four stormwater samples have been collected to evaluate the quality of stormwater discharging to the LDW via Outfalls A and B (Figure 5). The stormwater samples were collected from manholes MH32 and MH80, as shown on Figure 5. Stormwater collected in manhole MH32 is representative of stormwater discharging to the LDW via Outfall A and stormwater collected in manhole MH80 is representative of stormwater discharging to the LDW via Outfall B. A sample was collected from each of these manholes during rainfall events occurring on March 14, 2012 and April 20, 2012. The stormwater samples were collected in accordance with the RI/FS Work Plan, although the location identified in the work plan for the sample representing stormwater discharging through Outfall A was revised, as approved by Ecology. The samples were analyzed for volatile organic compounds (VOCs), SVOCs, metals (including mercury and chromium VI), petroleum hydrocarbons, and PCBs. Only some VOCs, SVOCs, and metals were detected in the samples. A summary of the detected constituents and the concentrations is provided in Table 10. The detected concentrations were compared to the groundwater preliminary screening levels presented in the RI/FS work plan. These preliminary screening levels and the comparison are presented in Table 10. As shown in Table 10, only bis(2-ethylhexyl)phthalate, arsenic,

and barium were detected in stormwater samples collected at MH80 (Outfall B). The same constituents and zinc were detected in stormwater samples collected at MH32 (Outfall A).

CONCLUSION AND RECOMMENDATIONS

Constituents have been detected in the storm drain solids at the Site at concentrations that exceed the SMS criteria. Analytical results for the stormwater samples indicate that constituents detected in storm drain solids at concentrations above the SMS are not present in the stormwater at concentrations above the RI preliminary screening levels, except bis(2-ethylhexyl)phthalate (Outfalls A and B) and zinc (Outfall A only). Because these two constituents were detected in the storm drain solids, particulates entrained in the stormwater samples may be the source of the constituents in the stormwater. Arsenic and barium, which were not detected in the storm drain solids at concentrations greater than the SMS, are present in the stormwater at concentrations above the RI preliminary groundwater screening levels. The source of these materials in the stormwater is not known; however, these materials have been found in soil and source material samples in the vicinity of the Site storm drain systems. In accordance with the RI/FS work plan, because some of the concentrations of the metals and bis(2-ethylhexyl)phthalate detected in the soil may be considered elevated [i.e., above the RI preliminary screening levels and, for arsenic, the natural background level (20 mg/kg; MTCA Table 740-1)], a video survey of the storm drain system piping associated with both outfalls is likely to be required to determine if soil and/or groundwater may be entering the storm drain systems through cracks or holes in the piping or structures.

Based on the results of the source material sampling, peeling paint, concrete joint material on the Isaacson property, and surface debris may be a source of contaminants found in the storm drain solids. Continued source control measures and implementation of best management practices should reduce the amount of contaminants entering the storm drain system at the Site. The similarity of detected constituents in surface debris and storm drain system solids suggests that thorough and frequent surface sweeping across the entire site should reduce the potential for contaminated debris to enter the storm drain system. The potential for elevated concentrations of PCBs and metals (including mercury and zinc in paint chips on the 14-13 building and chromium, lead, and zinc in paint chips on bollards and conex boxes surrounding the 14-02/14-03 buildings) in paint chips to enter the storm drain system could be addressed through paint abatement or other source removal activities (such as removing the conex boxes surrounding the 14-02/14-03 buildings). Storm drain filter inserts have been placed in selected storm drain structures and this practice could be implemented Site-wide to reduce the amount of contaminated debris potentially entering the storm drain system. Landau Associates will continue to work with Boeing

in developing and implementing a source control and abatement program for the management and removal of materials with a significant potential to impact or enter the storm drain system at the site.

REFERENCES

Boeing. 2011. Letter Report: *September 2011 Progress Report, Boeing Isaacson-Thompson Site, Agreed Order No. DE 7088.* Prepared for the Washington State Department of Ecology. October 15.

Landau Associates. 2012. Technical Memorandum: *Source Material Sampling and Analysis Plan, Boeing Isaacson-Thompson Site, Tukwila, Washington.* Prepared for The Boeing Company. March 13.

Landau Associates. 2011. *Final Work Plan, Remedial Investigation/Feasibility Study, Boeing Isaacson-Thompson Site, Tukwila, Washington.* Prepared for The Boeing Company. September 16.

KJH/SJL/CMG/kes

ATTACHMENTS

Figure 1 – Metals in Catch Basin Solids
Figure 2 – PCBs in Catch Basin Solids
Figure 3 – Benzyl Alcohol in Catch Basin Solids
Figure 4 – Source Material Sampling Locations
Figure 5 – Stormwater Sampling Locations

Table 1 – Source Material Sampling Location Descriptions
Table 2 – 14-01 Building South Area
Table 3 – 14-01 Building East Area
Table 4 – 14-01 Building North Area
Table 5 – 14-01 Building West Area
Table 6 – 14-13 Building Area
Table 7 – 14-02/14-03 Building Area
Table 8 – Isaacson East Area
Table 9 – Isaacson West Area
Table 10 – Analytical Results for Detected Constituents in RI Stormwater Samples

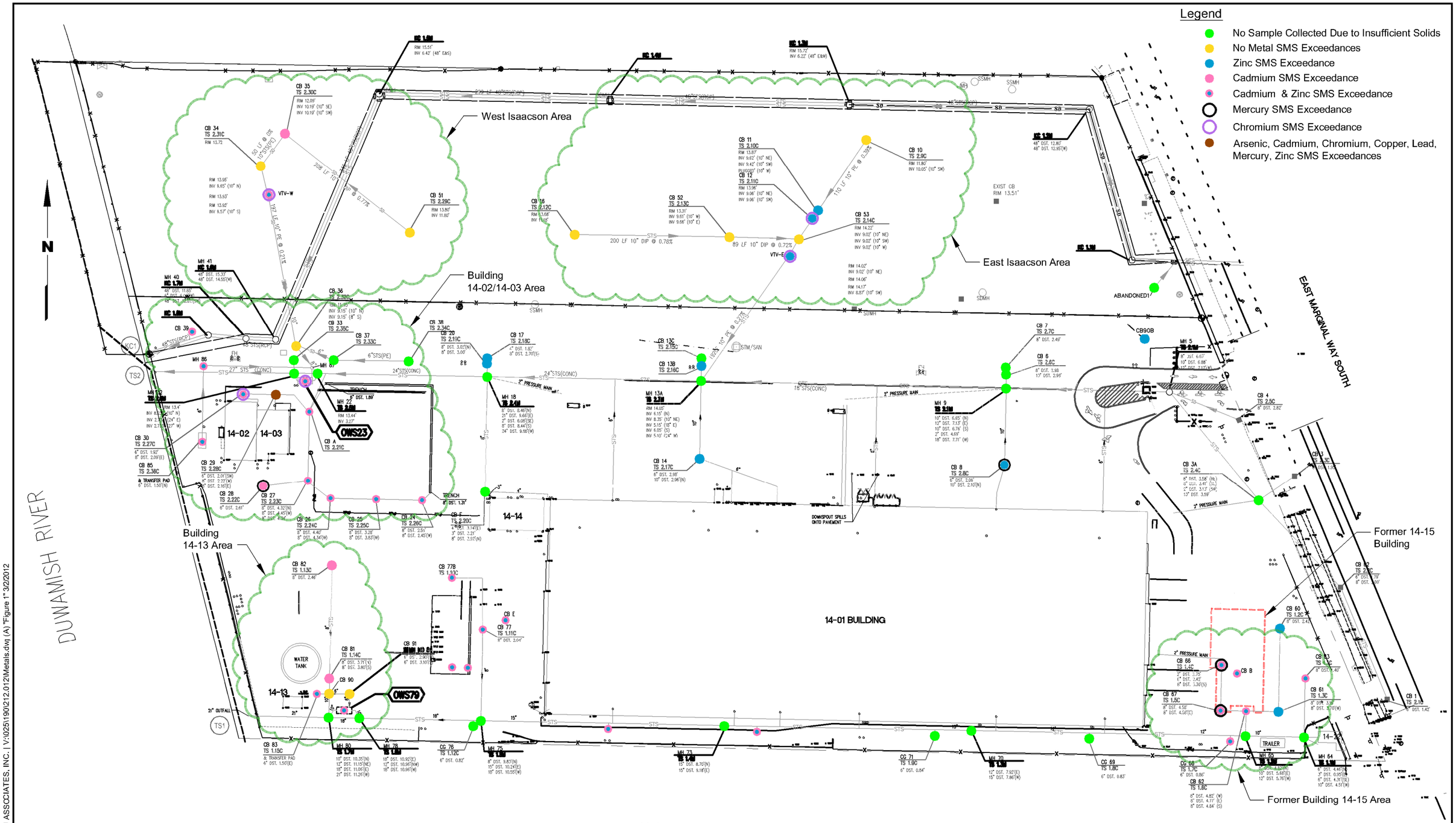

Source: Boeing 2011

Note

1. Black and white reproduction of this color original may reduce its effectiveness and lead to incorrect interpretation.

Boeing Isaacson-Thompson Site Tukwila, Washington	**Metals in Catch Basin Solids**	Figure 1

LANDAU ASSOCIATES

LANDAU ASSOCIATES, INC. | V:\025\190\212.012\Metals.dwg (A) "Figure 1" 3/2/2012

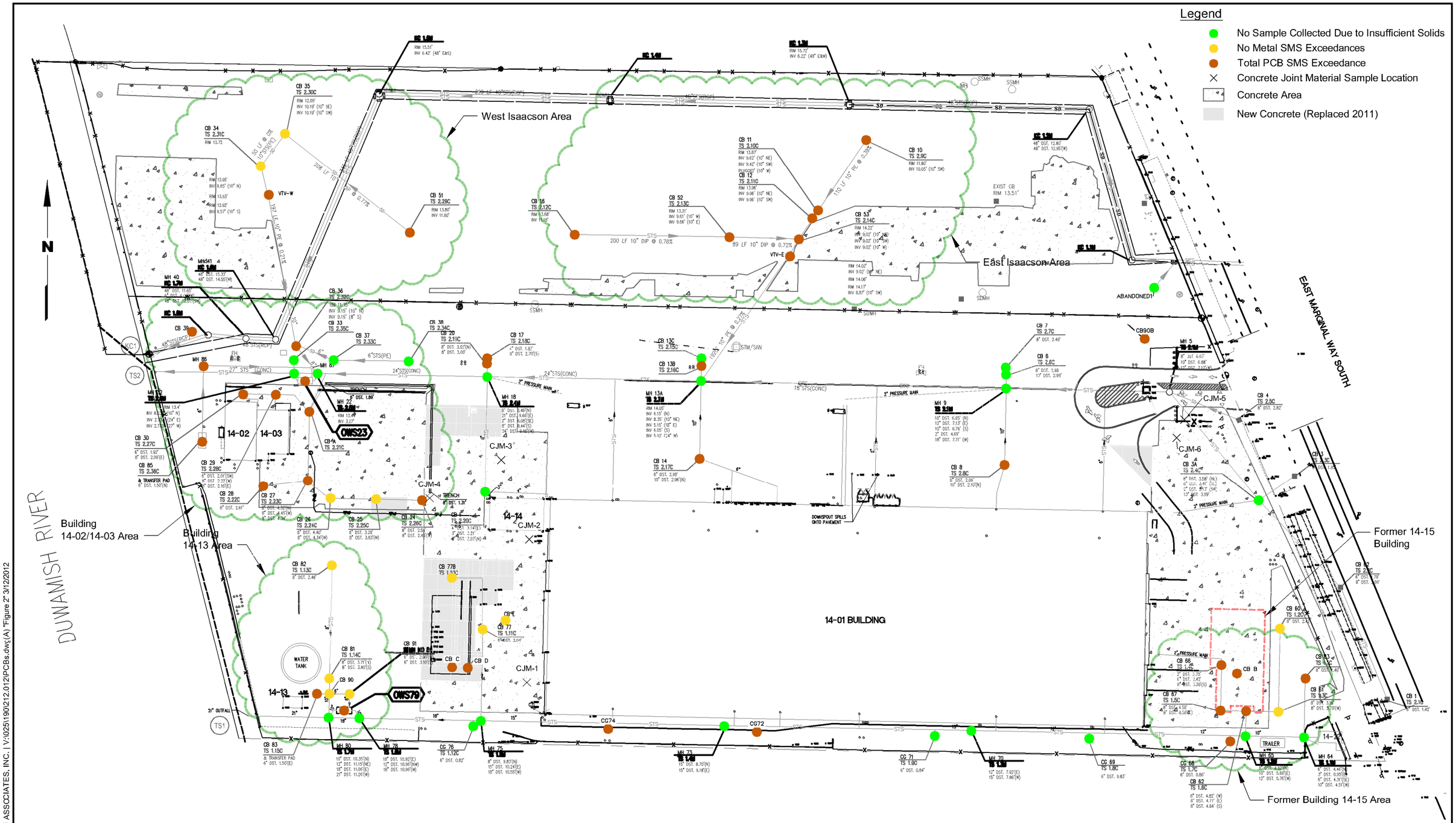

Note

1. Black and white reproduction of this color original may reduce its effectiveness and lead to incorrect interpretation.

Source: Boeing 2011

Boeing Isaacson-Thompson Site Tukwila, Washington	**PCBs in Catch Basin Solids**	Figure 2

LANDAU ASSOCIATES

LANDAU ASSOCIATES, INC. | V:\0251\190\212.012\PCBs.dwg(A) "Figure 2" 3/12/2012

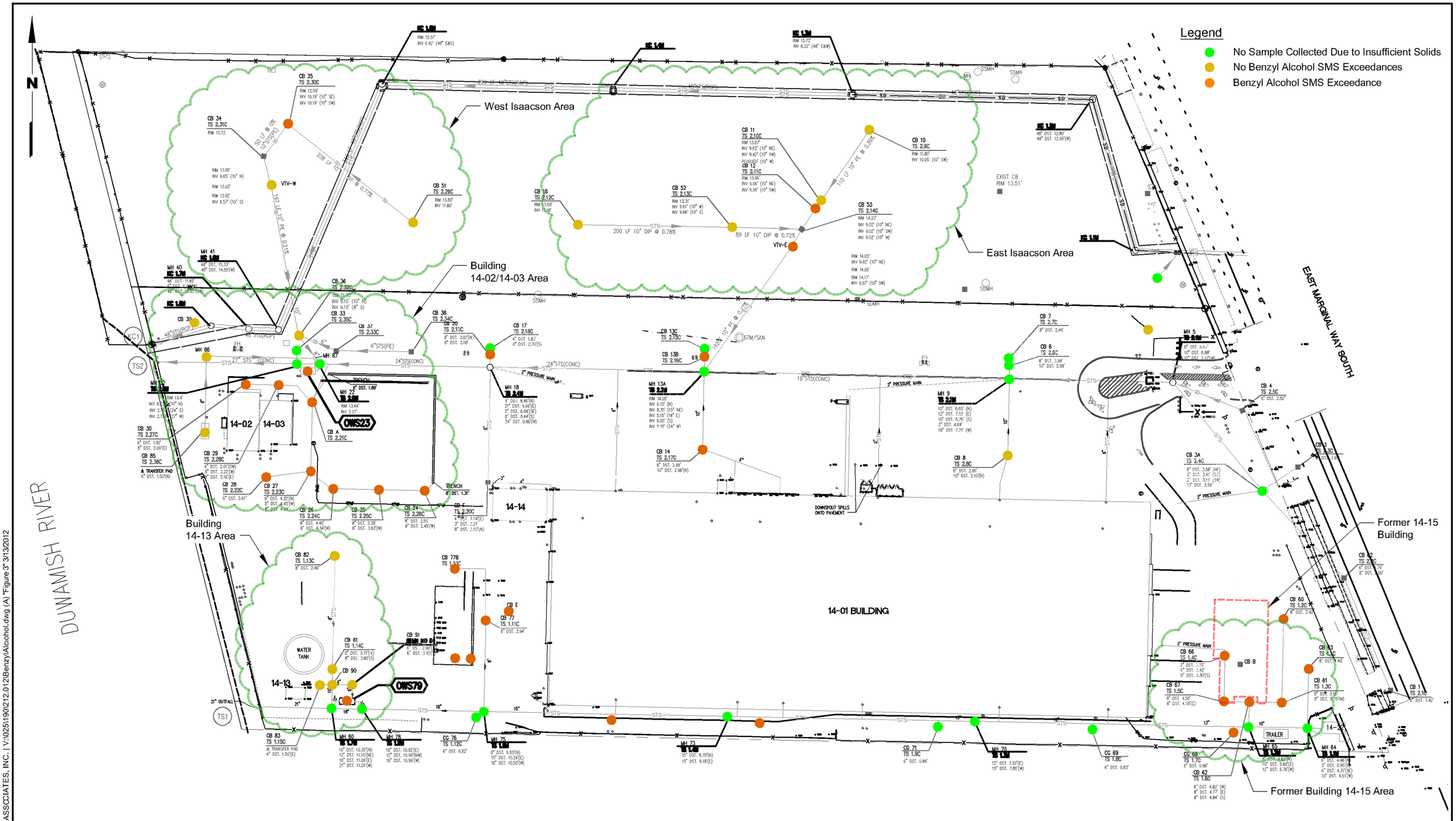

Source: Boeing 2011

0 120 240
Scale in Feet

Note

1. Black and white reproduction of this color original may reduce its effectiveness and lead to incorrect interpretation.

Boeing
Isaacson-Thompson Site
Tukwila, Washington

Benzyl Alcohol in Catch Basin Solids

Figure
3

LANDAU ASSOCIATES

LANDAU ASSOCIATES, INC. | V:\025\1901212.012\Benzyl\Alcohol.dwg (A) "Figure 3" 3/13/2012

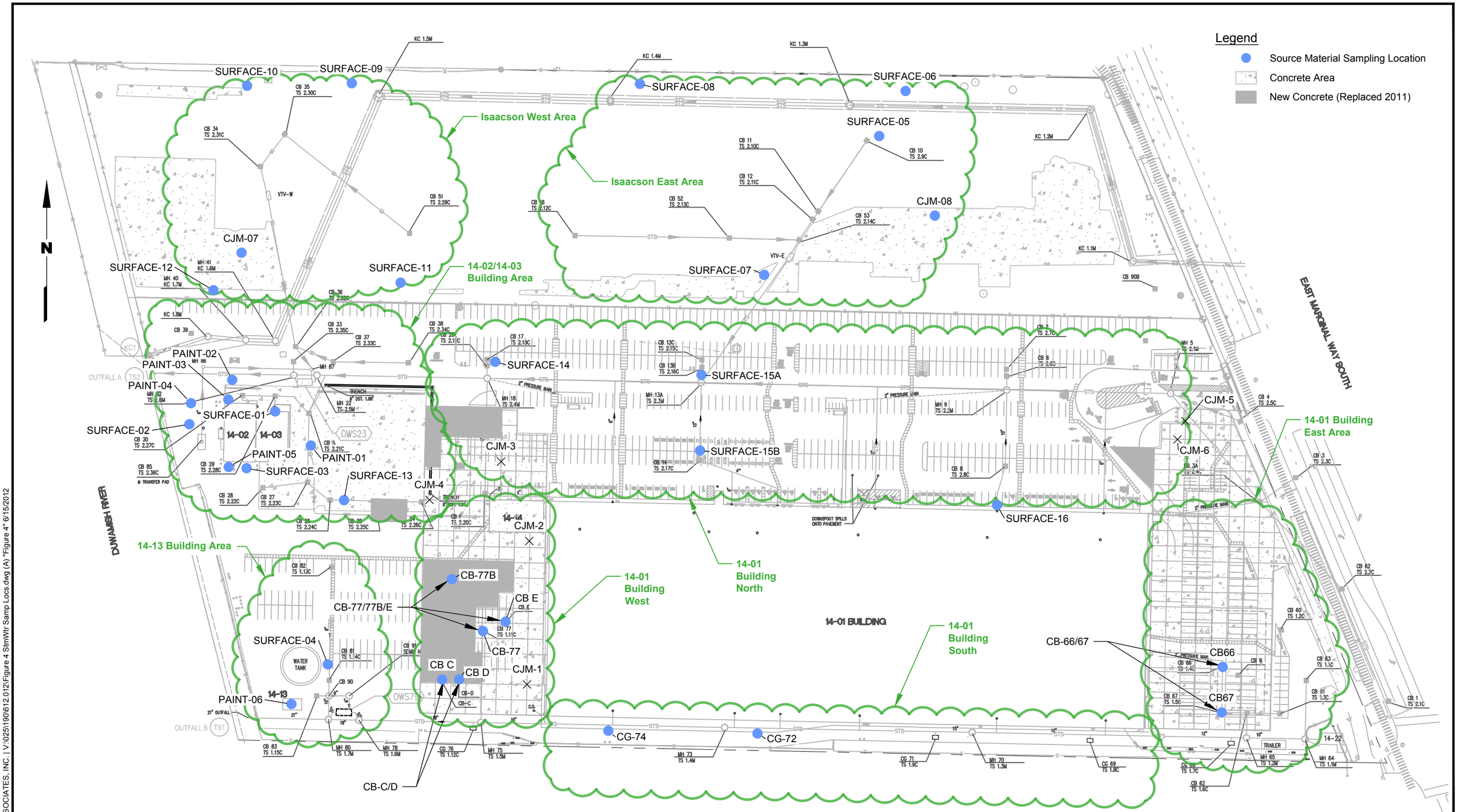

Note

1. Black and white reproduction of this color original may reduce its effectiveness and lead to incorrect interpretation.

0 120 240
Scale in Feet

Source: Boeing 2011

Boeing Isaacson-Thompson Site Tukwila, Washington	**Source Material Sampling Locations**	Figure 4

LANDAU ASSOCIATES

LANDAU ASSOCIATES, INC. | V:\025\1190\612.012\Figure 4 StmWtr Samp Locs.dwg (A) "Figure 4" 6/15/2012

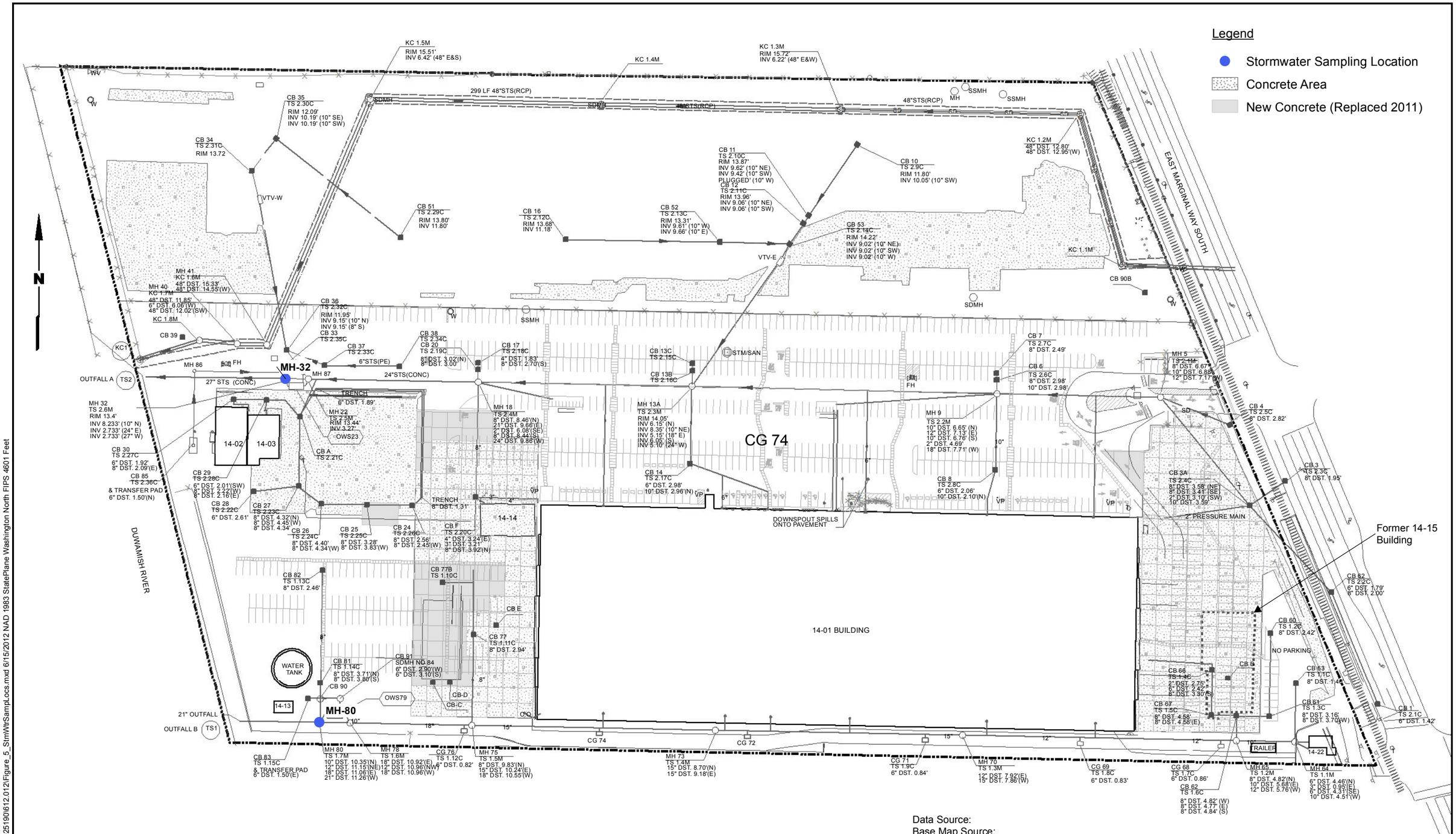

Data Source:
Base Map Source:
Adapted from:

Note
1. Black and white reproduction of this color original may reduce its effectiveness and lead to incorrect interpretation.

0 120 240
Scale in Feet

LANDAU ASSOCIATES

Boeing Isaacson-Thompson Site Tukwila, Washington	**Stormwater Sampling Locations**	Figure 5

TABLE 1
SOURCE MATERIAL SAMPLING LOCATION DESCRIPTIONS
BOEING ISAACSON-THOMPSON
TUKWILA, WASHINGTON

Sample Name	Sample Media	Date Sampled	Site	Sample Location Notes/Comments
IT-CB-66/67	Storm Drain Solids	4/3/2012	Thompson	Composite CB solids from CB66 and CB67; both structures have filters, filter at CB66 is defective/not fitted properly.
IT-CB-77/77B/77E	Storm Drain Solids	4/3/2012	Thompson	Composite CB solids from CB77, CB77B, and CB77E; 75% of volume from CB77, 25% of volume from CB77B/77E. All structures are fitted with filters.
IT-CB-C/D	Storm Drain Solids	4/3/2012	Thompson	Composite CB solids from CBC/CBD; 75% of volume from CBC, 25% of volume from CBD. Both structures are fitted with filters.
IT-CG-72	Storm Drain Solids	4/4/2012	Thompson	Catch basin solids (no surface solids present to sample).
IT-CG-74	Storm Drain Solids	4/4/2012	Thompson	Catch basin solids (no surface solids present to sample).
IT-CJM-07	Concrete Joint Material	4/10/2012	Isaacson	Weathered/old concrete joint material, dark black with tar-like appearance, collected from concrete panel remnants on west side of Isaacson. Asbestos containing, collected by the Boeing Asbestos Abatement team.
IT-CJM-08	Concrete Joint Material	4/10/2012	Isaacson	Weathered/old concrete joint material, dark black with tar-like appearance, collected from concrete panel remnants on east side of Isaacson. Asbestos containing, collected by the Boeing Asbestos Abatement team.
IT-PAINT-01	Paint Chips	4/10/2012	Thompson	Yellow-painted bollard surrounding large white tank on the east side of the 14-03 building, layer of white paint visible under yellow.
IT-PAINT-02	Paint Chips	4/10/2012	Thompson	Yellow-painted bollards and railing surrounding hydrant north of the 14-02/14-03 buildings, multiple layers of yellow paint visible.
IT-PAINT-03	Paint Chips	4/10/2012	Thompson	Beige-painted conex box on the north side of the 14-02 building, layers of red paint visible under beige, in very poor/peeling condition.
IT-PAINT-04	Paint Chips	4/10/2012	Thompson	Grey-painted conex box on the west side of the 14-02 building in poor condition, layers of green and beige paint visible, in very poor/peeling condition.
IT-PAINT-05	Paint Chips	4/10/2012	Thompson	Beige peeling paint on the concrete exterior of the south side of the 14-02 building.
IT-PAINT-06	Paint Chips	4/10/2012	Thompson	Beige peeling paint on the concrete exterior of the 14-13 building, composite paint chip sample from all sides of the building, visibly appears to be the same paint covering the entire building.

TABLE 1
SOURCE MATERIAL SAMPLING LOCATION DESCRIPTIONS
BOEING ISAACSON-THOMPSON
TUKWILA, WASHINGTON

Sample Name	Sample Media	Date Sampled	Site	Sample Location Notes/Comments
IT-SURFACE-01	Surface Debris	4/3/2012	Thompson	North side of 14-02/14-03 buildings, from mossy debris inside the chain-link fence housing equipment, some orange/blue paint chips in sample.
IT-SURFACE-02	Surface Debris	4/3/2012	Thompson	West side of 14-02/14-03 buildings, dirt/needle/dust debris along concrete joint.
IT-SURFACE-03	Surface Debris	4/3/2012	Thompson	South side of 14-02/14-03 buildings, mossy dirt and debris at the base of exterior equipment.
IT-SURFACE-04	Surface Debris	4/3/2012	Thompson	East side of the water tank and 14-13 building, dirt/dust/debris.
IT-SURFACE-05	Surface Debris	4/3/2012	Isaacson	Surface debris consisting of dirt, wet solids, and mossy material, near CB10.
IT-SURFACE-06	Surface Debris	4/3/2012	Isaacson	Surface debris consisting of wet dirt, dust, and mossy material, north-east of CB10, along Isaacson fenceline.
IT-SURFACE-07	Surface Debris	4/3/2012	Isaacson	Surface debris consisting of wet dirt, dust, and mossy material, near/southwest of VTV-E.
IT-SURFACE-08	Surface Debris	4/3/2012	Isaacson	Surface debris near north fenceline of Isaacson consisting of wet, mossy, dirt and dust debris.
IT-SURFACE-09	Surface Debris	4/3/2012	Isaacson	Surface debris near on fenceline of Isaacson consisting of wet, mossy, dirt and dust debris.
IT-SURFACE-10	Surface Debris	4/3/2012	Isaacson	Surface debris on north fenceline of Isaacson, northwest of CB35, consisting of wet, mossy dirt and debris.
IT-SURFACE-11	Surface Debris	4/3/2012	Isaacson	Surface debris consisting of mossy dirt/debris on south side of Isaacson along fenceline, south of CB51.
IT-SURFACE-12	Surface Debris	4/3/2012	Isaacson	Surface debris consisting of mossy dirt/debris on south side of Isaacson along fenceline.
IT-SURFACE-13	Surface Debris	4/4/2012	Thompson	Surface debris collected from dirt and solids built up near CB26, small blue paint flecks visible in sample.
IT-SURFACE-14	Surface Debris	4/4/2012	Thompson	Surface debris collected from dirt and solids built up near CB17/CB20.
IT-SURFACE-15	Surface Debris	4/4/2012	Thompson	Surface debris from dirt and solids built up near CB13/CB14; 10% of volume from CB13 area, 90% of volume from CB14 area.
IT-SURFACE-16	Surface Debris	4/10/2012	Thompson	Surface debris consisting of gravelly dirt/dust/small rock chips along the north side of the 14-01 building, south of CB-08.

TABLE 2
14-01 BUILDING SOUTH AREA
BOEING ISAACSON-THOMPSON
REMEDIAL INVESTIGATION

	Dry Weight Equivalent to SMS Criteria (a)		2011 Storm Drain Solids		2012 Source Material	
			IT-CG72	IT-CG74	IT-CG-72	IT-CG-74
			TL53A	TL29D	6607158	6607157
			TL53	TL29	1300346	1300346
	SQS/LAET (b)	CSL/2LAET (c)	09/08/2011	09/07/2011	04/04/2012	04/04/2012
SEMIVOLATILES (µg/kg)						
Method SW8270D						
Benzoic Acid	650	650	2700 UJ	6100 UJ	58,000 U	84,000 U
Benzyl Alcohol	57	73	**390**	**860**	**27,000**	17,000 U
4-Bromophenyl-phenylether			130 U	300 U	5800 U	8400 U
Butylbenzylphthalate	63	900	**400**	**350**	23,000 U	34,000 U
Di-n-Butylphthalate	1400	5100	**500**	**460**	23,000 U	34,000 U
Carbazole			**300**	**260** J1	5800 U	8400 U
4-Chloro-3-methylphenol			670 U	1500 U	5800 U	8400 U
4-Chloroaniline			1800 U	4100 U	5800 U	8400 U
bis(2-Chloroethoxy) Methane			130 U	300 U	5800 U	8400 U
Bis-(2-Chloroethyl) Ether			130 U	300 U	5800 U	8400 U
2-Chloronaphthalene			130 U	300 U	2400 U	3500 U
2-Chlorophenol			130 U	300 U	5800 U	8400 U
4-Chlorophenyl-phenylether			130 UJ	300 UJ	5800 U	8400 U
2,2'-Oxybis(1-Chloropropane)			130 U	300 U	5800 U	8400 U
1,2-Dichlorobenzene	35	50	130 U	300 U	5800 U	8400 U
1,3-Dichlorobenzene			130 U	300 U	5800 U	8400 U
1,4-Dichlorobenzene	110	110	130 U	300 U	5800 U	8400 U
3,3'-Dichlorobenzidine			1000 U	2300 U	35,000 U	51,000 U
2,4-Dichlorophenol			1300 U	3000 U	5800 U	8400 U
Diethylphthalate	200	1200	340 U	760 U	23,000 U	34,000 U
2,4-Dimethylphenol	29	29	270 U	610 U	3500 U	5100 U
Dimethylphthalate	71	160	**170**	300 U	23,000 U	34,000 U
4,6-Dinitro-2-Methylphenol			1300 U	3000 U	58,000 U	84,000 U
2,4-Dinitrophenol			5700 U	13000 U	100,000 U	150,000 U
2,4-Dinitrotoluene			670 U	1500 U	23,000 U	34,000 U
2,6-Dinitrotoluene			670 U	1500 U	5800 U	8400 U
bis(2-Ethylhexyl)phthalate	1300	3100	**10000**	**4100**	**75,000**	**41,000** J1
Hexachlorobenzene	22	70	130 U	300 U	1200 U	1700 U
Hexachlorobutadiene	11	120	670 U	1500 U	3500 U	5100 U
Hexachlorocyclopentadiene			2700 U	6100 U	58,000 U	84,000 U
Hexachloroethane			130 U	300 U	12,000 U	17,000 U
Isophorone			130 U	300 U	5800 U	8400 U
1-Methylnaphthalene			130 U	300 U	1200 U	1700 U
2-Methylphenol	63	63	130 U	300 U	3500 U	5100 U
4-Methylphenol	670	670	**200** J1	**180** J1	**6400** J1	**9200** J1
2-Nitroaniline			670 U	1500 U	5800 U	8400 U
3-Nitroaniline			670 U	1500 U	23,000 U	34,000 U
4-Nitroaniline			670 U	1500 U	23,000 U	34,000 U
Nitrobenzene			130 U	300 U	5800 U	8400 U
2-Nitrophenol			670 U	1500 U	5800 U	8400 U
4-Nitrophenol			670 U	1500 U	58,000 U	84,000 U
N-Nitroso-Di-N-Propylamine			130 U	300 U	5800 U	8400 U
N-Nitrosodiphenylamine	28	40	130 U	300 U	3500 U	5100 U
Di-n-Octyl phthalate	6200	6200	**320**	**1000**	23,000 U	34,000 U
Pentachlorophenol	360	690	1300 U	3000 U	12,000 U	17,000 U
Phenol	420	1200	**270**	**210** J1	5800 U	8400 U
1,2,4-Trichlorobenzene	31	51	130 U	300 U	5800 U	8400 U
2,4,5-Trichlorophenol			670 U	1500 U	5800 U	8400 U
2,4,6-Trichlorophenol			670 U	1500 U	5800 U	8400 U
PAHs (µg/kg)						
Method SW8270D-SIM						
Acenaphthene	500	500	**130**	**280**	**880** J	**770**
Acenaphthylene	1300	1300	64 U	**50** J1	**96** J, J1	**150** J1
Anthracene	960	960	**170**	**410**	**1300** J	**1500**
Benzo(a)anthracene	1300	1600	**560**	**890**	**3200** J	**5500**
Benzo(a)pyrene	1600	1600	**530**	**780**	**3000** J	**5200**
Benzo(b)fluoranthene			NA	NA	**5000** J	**9200**
Benzo(g,h,i)perylene	670	720	**340**	**600**	**1700**	**2300**
Benzo(k)fluoranthene			NA	NA	**1800**	**4200**
Total Benzofluoranthenes (d, e)	3200	3600	**1200**	**1600**	NA	NA
Chrysene	1400	2800	**980**	**1200**	**4000** J	**7000**
Dibenz(a,h)anthracene	230	230	**78**	**160**	**330**	**690**
Dibenzofuran			**110**	**200**	**530**	**530** J1
Fluoranthene	1700	2500	**2000**	**2800**	**9100**	**16,000**
Fluorene	540	540	**190**	**370**	**860** J	**830**
Indeno(1,2,3-cd)pyrene	600	690	**320**	**440**	**1400**	**2300**
2-Methylnaphthalene	670	670	**78**	**120**	**280** J	**260** J1
Naphthalene	2100	2100	**110**	**270**	**450** J	**550** J1
Total Naphthalenes			**188**	**390**	**730** J	**810** J
Phenanthrene	1500	1500	**1400**	**2500**	**7300** J	**8600**
Pyrene	2600	3300	**1400**	**2100**	**7100** J	**10,000**
cPAH TEQ			**756**	**1101**	**4213** J	**7459**
PCBs (µg/kg)						
Method SW8082						
Aroclor 1016			19 U	19 U	18 U	24 U
Aroclor 1221			19 U	19 U	22 U	31 U
Aroclor 1232			19 U	19 U	39 U	54 U
Aroclor 1242			19 U	19 U	16 U	22 U
Aroclor 1248			91 U	140 U	16 U	22 U
Aroclor 1254			**300** J	**280**	**250** J	**260** J
Aroclor 1260			**330**	**99**	**150** J	**190** J
Total PCBs (d)	130	1000	**630** J	**379**	**400** J	**450** J
TOTAL METALS (mg/kg)						
Methods 6010B/6020						
Antimony			0.4 U	**0.7**	**2.91**	**8.87**
Arsenic	57	93	**6.8**	**9.6**	**8.88**	**11.5**
Barium			**140**	**175**	**120**	**147**
Beryllium			**0.5**	0.6 U	**0.152** J1	**0.229** J1
Cadmium	5.1	6.7	**14.8**	**18.4**	**4.59**	**8.61**
Chromium	260	270	**134**	**198**	**78.6**	**148**
Copper	390	390	**208**	**218**	**98.6**	**174**
Lead	450	530	**292**	**377**	**98.3**	**169**
Nickel			**64.9**	**101**	**41.8**	**75.8**
Selenium			0.9 U	1 U	1.66 U	2.22 U
Silver	6.1	6.1	**0.7**	**0.8**	**1.11** J1	**1.84**
Zinc	410	960	**1400**	**1650**	**691**	**1150**
Method SW7199						
Chromium VI			**1.09**	1.08 U	**3.5**	**1.1** J1
Method SW7471A						
Mercury	0.41	0.59	**0.15**	**0.20**	**0.0866** J1	**0.142** J1

TABLE 2
14-01 BUILDING SOUTH AREA
BOEING ISAACSON-THOMPSON
REMEDIAL INVESTIGATION

Indicates concentration exceeds SQS but less than the CSL or the dry weight equivalent values [Lower Apparent Effect Threshold (LAET) and and 2LAET, respectively]

Indicates concentration exceeds the SQS and CSL or dry weight equivalent criteria.

(a) Dry weight equivalent criteria are based on the Puget Sound Apparent Effect Threshold Values (Barrick et al. 1988)

(b) SMS Sediment Quality Standard /Lower Apparent Effects Threshold

(c) SMS Cleanup Screening Level / Second Lower Apparent Effects Threshold

(d) Where chemical criteria in this table represent the sum of individual compounds or isomers, the following methods shall be applied:

(i) Where chemical analyses identify an undetected value for every individual compound/isomer, then the single highest detection limit shall represent the sum of the respective compound/isomers.

(ii) Where chemical analyses detect one or more individual compounds/isomers, only the detected concentrations will be added to represent the group sum.

(e) The total benzofluoranthenes criterion represents the sum of the concentrations of the "B," "J," and "K" isomers.

J = Indicates the analyte was positively identified; the associated numerical value is the approximate concentration of the analyte in the sample.

J1 = Laboratory flag indicating the analyte was positively identified; the associated concentration is approximate and less than the reporting limit, but equal to or greater than the detection limit.

U = Indicates the compound was not detected at or above the reporting limit.

TABLE 3
14-01 BUILDING EAST AREA
BOEING ISAACSON-THOMPSON
REMEDIAL INVESTIGATION

	Dry Weight Equivalent to SMS Criteria (a)		2011 Storm Drain Solids				2012 Source Material
			IT-CB60/61	IT-CB63	IT-CB66/67	IT-CBB/62/68	IT-CB-66/67
			TL29G	TL29F	TL29I	TL29H	6607151
			TL29	TL29	TL29	TL29	1300346
	SQS/LAET (b)	CSL/2LAET (c)	09/07/2011	09/07/2011	09/07/2011	09/07/2011	04/03/2012
SEMIVOLATILES (µg/kg)							
Method SW8270D							
Benzoic Acid	650	650	5800 UJ	5900 UJ	1200 UJ	3300 UJ	20,000 U
Benzyl Alcohol	57	73	**6500**	**1000**	**790**	**280**	4000 U
4-Bromophenyl-phenylether			290 U	300 U	58 U	170 U	2000 U
Butylbenzylphthalate	63	900	**7900**	**270** J1	**340**	**160** J1	8000 U
Di-n-Butylphthalate	1400	5100	**1300**	**280** J1	**740**	**180**	8000 U
Carbazole			**170** J1	**240** J1	**200**	170 U	**6000**
4-Chloro-3-methylphenol			1400 U	1500 U	290 U	840 U	2000 U
4-Chloroaniline			3900 U	4000 U	780 U	2300 U	2000 U
bis(2-Chloroethoxy) Methane			290 U	300 U	58 U	170 U	2000 U
Bis-(2-Chloroethyl) Ether			290 U	300 U	58 U	170 U	2000 U
2-Chloronaphthalene			290 U	300 U	58 U	170 U	840 U
2-Chlorophenol			290 U	300 U	58 U	170 U	2000 U
4-Chlorophenyl-phenylether			290 UJ	300 UJ	58 UJ	170 UJ	2000 U
2,2'-Oxybis(1-Chloropropane)			290 U	300 U	58 U	170 U	2000 U
1,2-Dichlorobenzene	35	50	290 U	300 U	58 U	170 U	2000 U
1,3-Dichlorobenzene			290 U	300 U	58 U	170 U	2000 U
1,4-Dichlorobenzene	110	110	290 U	300 U	58 U	170 U	2000 U
3,3'-Dichlorobenzidine			2200 U	2200 U	430 U	1200 U	12,000 U
2,4-Dichlorophenol			2900 U	3000 U	580 U	1700 U	2000 U
Diethylphthalate	200	1200	720 U	740 U	140 U	420 U	8000 U
2,4-Dimethylphenol	29	29	580 U	590 U	120 U	330 U	1200 U
Dimethylphthalate	71	160	**610**	300 U	**520**	170 U	8000 U
4,6-Dinitro-2-Methylphenol			2900 U	3000 U	580 U	1700 U	20,000 U
2,4-Dinitrophenol			12000 U	13000 U	2400 U	7100 U	36,000 U
2,4-Dinitrotoluene			1400 U	1500 U	290 U	840 U	8000 U
2,6-Dinitrotoluene			1400 U	1500 U	290 U	840 U	2000 U
bis(2-Ethylhexyl)phthalate	1300	3100	**16000**	**6600**	**9000**	**2800**	**71,000**
Hexachlorobenzene	22	70	290 U	300 U	58 U	170 U	400 U
Hexachlorobutadiene	11	120	1400 U	1500 U	290 U	840 U	1200 U
Hexachlorocyclopentadiene			5800 U	5900 U	1200 U	3300 U	20,000 U
Hexachloroethane			290 U	300 U	58 U	170 U	4000 U
Isophorone			290 U	300 U	**34** J1	170 U	2000 U
1-Methylnaphthalene			290 U	300 U	**37** J1	170 U	**1000** J1
2-Methylphenol	63	63	290 U	300 U	58 U	170 U	1200 U
4-Methylphenol	670	670	**200** J1	**330** J1	**220**	330 U	**18,000**
2-Nitroaniline			1400 U	1500 U	290 U	840 U	2000 U
3-Nitroaniline			1400 U	1500 U	290 U	840 U	8000 U
4-Nitroaniline			1400 U	1500 U	290 U	840 U	8000 U
Nitrobenzene			290 U	300 U	58 U	170 U	2000 U
2-Nitrophenol			1400 U	1500 U	290 U	840 U	2000 U
4-Nitrophenol			1400 U	1500 U	290 U	840 U	20,000 U
N-Nitroso-Di-N-Propylamine			290 U	300 U	58 U	170 U	2000 U
N-Nitrosodiphenylamine	28	40	290 U	300 U	**37** J1	170 U	1200 U
Di-n-Octyl phthalate	6200	6200	**2900**	**330**	**2300**	**900**	8000 U
Pentachlorophenol	360	690	2900 U	3000 U	580 U	1700 U	4000 U
Phenol	420	1200	290 U	**280** J1	**470**	**110** J1	2000 U
1,2,4-Trichlorobenzene	31	51	290 U	300 U	58 U	170 U	2000 U
2,4,5-Trichlorophenol			1400 U	1500 U	290 U	840 U	2000 U
2,4,6-Trichlorophenol			1400 U	1500 U	290 U	840 U	2000 U
PAHs (µg/kg)							
Method SW8270D-SIM							
Acenaphthene	500	500	**50**	**75**	**94**	**52**	**4000**
Acenaphthylene	1300	1300	**20** J1	**26** J1	**37**	28 U	**650** J1
Anthracene	960	960	**86**	**110**	**150**	**67**	**7200**
Benzo(a)anthracene	1300	1600	**340**	**550**	**760**	**390**	**12,000**
Benzo(a)pyrene	1600	1600	**400**	**620**	**1100**	**390**	**12,000**
Benzo(b)fluoranthene			NA	NA	NA	NA	**21,000**
Benzo(g,h,i)perylene	670	720	**370**	**530**	**840**	**300**	**3500**
Benzo(k)fluoranthene			NA	NA	NA	NA	**9500**
Total Benzofluoranthenes (d, e)	3200	3600	**920**	**1500**	**2600**	**760**	NA
Chrysene	1400	2800	**650**	**1100**	**1600**	**720**	**15,000**
Dibenz(a,h)anthracene	230	230	**80**	**140**	**190**	**71**	**1100**
Dibenzofuran			**50**	**98**	**110**	**41**	**2900**
Fluoranthene	1700	2500	**1200**	**2100**	**2700**	**1000**	**38,000**
Fluorene	540	540	**65**	**120**	**110**	**46**	**4600**
Indeno(1,2,3-cd)pyrene	600	690	**290**	**430**	**730**	**250**	**3800**
2-Methylnaphthalene	670	670	**38**	**64**	**120**	**33**	**1600**
Naphthalene	2100	2100	**67**	**92**	**170**	**49**	**3500**
Total Naphthalenes			**105**	**156**	**290**	**82**	**5100**
Phenanthrene	1500	1500	**680**	**1300**	**1500**	**540**	**33,000**
Pyrene	2600	3300	**880**	**1600**	**2300**	**810**	**30,000**
cPAH TEQ			**570**	**893**	**1544**	**544**	**16,890**
PCBs (µg/kg)							
Method SW8082							
Aroclor 1016			20 U	20 U	19 U	19 U	31 U
Aroclor 1221			20 U	20 U	19 U	19 U	39 U
Aroclor 1232			20 U	20 U	19 U	19 U	68 U
Aroclor 1242			20 U	20 U	19 U	19 U	28 U
Aroclor 1248			20 U	36 U	**36**	**26**	28 U
Aroclor 1254			**39**	**77**	**77**	**68**	**190** J
Aroclor 1260			**43**	**86**	**120**	**54**	**130** J, J1
Total PCBs (d)	130	1000	**82**	**163**	**233**	**148**	**320** J
TOTAL METALS (mg/kg)							
Methods 6010B/6020							
Antimony			0.3 U	0.5 U	0.4 U	0.3 U	**12.5**
Arsenic	57	93	**7.0**	**12.9**	**14.3**	**6.5**	**30.8**
Barium			**125**	**169**	**229**	**90.8**	**229**
Beryllium			0.3 U	0.5 U	**0.4**	0.3 U	**0.259** J1
Cadmium	5.1	6.7	**3.0**	**5.7**	**11.7**	**7.2**	**13.4**
Chromium	260	270	**107**	**165**	**128**	**100**	**168**
Copper	390	390	**156**	**207**	**242**	**76.9**	**268**
Lead	450	530	**261**	**393**	**299**	**370**	**294**
Nickel			**53.9**	**87**	**87**	**40.3**	**78.8**
Selenium			0.8 U	1 U	1 U	0.7 U	2.84 U
Silver	6.1	6.1	**0.8**	**1.3**	**2.9**	**0.3**	**1.94** J1
Zinc	410	960	**1680**	**1240**	**2400**	**960**	**2260**
Method SW7199							
Chromium VI			0.698 U	1.01 U	0.879 U	0.595 U	**11.1**
Method SW7471A							
Mercury	0.41	0.59	**0.08**	**0.24**	**1.16**	**0.04**	**0.168** J1

TABLE 3
14-01 BUILDING EAST AREA
BOEING ISAACSON-THOMPSON
REMEDIAL INVESTIGATION

Indicates concentration exceeds SQS but less than the CSL or the dry weight equivalent values [Lower Apparent Effect Threshold (LAET) and and 2LAET, respectively]

Indicates concentration exceeds the SQS and CSL or dry weight equivalent criteria.

(a) Dry weight equivalent criteria are based on the Puget Sound Apparent Effect Threshold Values (Barrick et al. 1988)

(b) SMS Sediment Quality Standard /Lower Apparent Effects Threshold

(c) SMS Cleanup Screening Level / Second Lower Apparent Effects Threshold

(d) Where chemical criteria in this table represent the sum of individual compounds or isomers, the following methods shall be applied:

(i) Where chemical analyses identify an undetected value for every individual compound/isomer, then the single highest detection limit shall represent the sum of the respective compound/isomers.

(ii) Where chemical analyses detect one or more individual compounds/isomers, only the detected concentrations will be added to represent the group sum.

(e) The total benzofluoranthenes criterion represents the sum of the concentrations of the "B," "J," and "K" isomers.

J = Indicates the analyte was positively identified; the associated numerical value is the approximate concentration of the analyte in the sample.

J1 = Laboratory flag indicating the analyte was positively identified; the associated concentration is approximate and less than the reporting limit, but equal to or greater than the detection limit.

U = Indicates the compound was not detected at or above the reporting limit.

TABLE 4
14-01 BUILDING NORTH AREA
BOEING ISAACSON-THOMPSON
REMEDIAL INVESTIGATION

	Dry Weight Equivalent to SMS Criteria (a)		2011 Storm Drain Solids					2012 Source Material		
			IT-CB8	IT-CB13B/14	IT-CB17	IT-CB20	IT-CB90B	IT-SURFACE-14	IT-SURFACE-15	IT-SURFACE-16
			TL74D	TL53K	TL74F	TL74C	TL53J	6607155	6607156	6612545
			TL74	TL53	TL74	TL74	TL53	1300346	1300346	1301439
	SQS/LAET (b)	CSL/2LAET (c)	09/09/2011	09/08/2011	09/09/2011	09/09/2011	09/08/2011	04/04/2012	04/04/2012	04/10/2012
SEMIVOLATILES (µg/kg)										
Method SW8270D										
Benzoic Acid	650	650	2200 U	9500 UJ	NA	**560** J1	10000 UJ	5500 U	11,000 U	**18,000** J1
Benzyl Alcohol	57	73	**56** J1	**240** J1	NA	**16000**	500 U	1100 U	2300 U	1600 U
4-Bromophenyl-phenylether			110 U	470 U	NA	94 U	500 U	550 U	1100 U	820 U
Butylbenzylphthalate	63	900	**160**	470 U	NA	**450**	**330** J1	2200 U	4500 U	3300 U
Di-n-Butylphthalate	1400	5100	110 U	470 U	NA	**410**	500 U	2200 U	**4800** J1	3300 U
Carbazole			110 U	**330** J1	NA	**66** J1	500 U	550 U	1100 U	820 U
4-Chloro-3-methylphenol			560 U	2400 U	NA	470 U	2500 U	550 U	1100 U	820 U
4-Chloroaniline			1500 U	6400 U	NA	1300 U	6800 U	550 U	1100 U	820 U
bis(2-Chloroethoxy) Methane			110 U	470 U	NA	94 U	500 U	550 U	1100 U	820 U
Bis-(2-Chloroethyl) Ether			110 U	470 U	NA	94 U	500 U	550 U	1100 U	820 U
2-Chloronaphthalene			110 U	470 U	NA	94 U	500 U	230 U	470 U	350 U
2-Chlorophenol			110 U	470 U	NA	94 U	500 U	550 U	1100 U	820 U
4-Chlorophenyl-phenylether			110 U	470 U	NA	94 U	500 U	550 U	1100 U	820 U
2,2'-Oxybis(1-Chloropropane)			110 U	470 U	NA	94 U	500 U	550 U	1100 U	820 U
1,2-Dichlorobenzene	35	50	110 U	470 U	NA	94 U	500 U	550 U	1100 U	820 U
1,3-Dichlorobenzene			110 U	470 U	NA	94 U	500 U	550 U	1100 U	820 U
1,4-Dichlorobenzene	110	110	110 U	470 U	NA	94 U	500 U	550 U	1100 U	820 U
3,3'-Dichlorobenzidine			850 U	3600 U	NA	710 U	3800 U	3300 U	6800 U	4900 U
2,4-Dichlorophenol			1100 U	4700 U	NA	940 U	5000 U	550 U	1100 U	820 U
Diethylphthalate	200	1200	280 U	1200 U	NA	240 U	1300 U	2200 U	4500 U	3300 U
2,4-Dimethylphenol	29	29	220 U	950 U	NA	190 U	1000 U	330 U	680 U	490 U
Dimethylphthalate	71	160	110 U	470 U	NA	**94**	500 U	2200 U	4500 U	3300 U
4,6-Dinitro-2-Methylphenol			1100 U	4700 U	NA	940 U	5000 U	5500 U	11,000 U	8200 U
2,4-Dinitrophenol			4800 U	20000 U	NA	4000 U	21000 U	9900 U	20,000 U	15,000 U
2,4-Dinitrotoluene			560 U	2400 U	NA	470 U	2500 U	2200 U	4500 U	3300 U
2,6-Dinitrotoluene			560 U	2400 U	NA	470 U	2500 U	550 U	1100 U	820 U
bis(2-Ethylhexyl)phthalate	1300	3100	**3300**	**4700**	NA	**9800**	**3800**	**3900** J1	**5400** J1	3300 U
Hexachlorobenzene	22	70	110 U	470 U	NA	94 U	500 U	110 U	230 U	160 U
Hexachlorobutadiene	11	120	560 U	2400 U	NA	470 U	2500 U	330 U	680 U	490 U
Hexachlorocyclopentadiene			2200 U	9500 U	NA	1900 U	10000 U	5500 U	11,000 U	8200 U
Hexachloroethane			110 U	470 U	NA	94 U	500 U	1100 U	2300 U	1600 U
Isophorone			110 U	470 U	NA	94 U	500 U	550 U	1100 U	820 U
1-Methylnaphthalene			110 U	470 U	NA	94 U	500 U	110 U	230 U	160 U
2-Methylphenol	63	63	110 U	470 U	NA	94 U	500 U	330 U	680 U	490 U
4-Methylphenol	670	670	**230**	**570** J1	NA	**85** J1	**3100**	550 U	1100 U	820 U
2-Nitroaniline			560 U	2400 U	NA	470 U	2500 U	550 U	1100 U	820 U
3-Nitroaniline			560 U	2400 U	NA	470 U	2500 U	2200 U	4500 U	3300 U
4-Nitroaniline			560 U	2400 U	NA	470 U	2500 U	2200 U	4500 U	3300 U
Nitrobenzene			110 U	470 U	NA	94 U	500 U	550 U	1100 U	820 U
2-Nitrophenol			560 U	2400 U	NA	470 U	2500 U	550 U	1100 U	820 U
4-Nitrophenol			560 U	2400 U	NA	470 U	2500 U	5500 U	11,000 U	8200 U
N-Nitroso-Di-N-Propylamine			110 U	470 U	NA	94 U	500 U	550 U	1100 U	820 U
N-Nitrosodiphenylamine	28	40	110 U	470 U	NA	94 U	500 U	330 U	680 U	490 U
Di-n-Octyl phthalate	6200	6200	**500**	470 U	NA	**3000**	500 U	2200 U	4500 U	**16,000**
Pentachlorophenol	360	690	1100 U	4700 U	NA	940 U	5000 U	1100 U	2300 U	1600 U
Phenol	420	1200	**62** J1	470 U	NA	**120**	**250** J1	550 U	1100 U	820 U
1,2,4-Trichlorobenzene	31	51	110 U	470 U	NA	94 U	500 U	550 U	1100 U	820 U
2,4,5-Trichlorophenol			560 U	2400 U	NA	470 U	2500 U	550 U	1100 U	820 U
2,4,6-Trichlorophenol			560 U	2400 U	NA	470 U	2500 U	550 U	1100 U	820 U

TABLE 4
14-01 BUILDING NORTH AREA
BOEING ISAACSON-THOMPSON
REMEDIAL INVESTIGATION

	Dry Weight Equivalent to SMS Criteria (a)		2011 Storm Drain Solids					2012 Source Material		
			IT-CB8	IT-CB13B/14	IT-CB17	IT-CB20	IT-CB90B	IT-SURFACE-14	IT-SURFACE-15	IT-SURFACE-16
			TL74D	TL53K	TL74F	TL74C	TL53J	6607155	6607156	6612545
			TL74	TL53	TL74	TL74	TL53	1300346	1300346	1301439
	SQS/LAET (b)	CSL/2LAET (c)	09/09/2011	09/08/2011	09/09/2011	09/09/2011	09/08/2011	04/04/2012	04/04/2012	04/10/2012
PAHs (µg/kg)										
Method SW8270D-SIM										
Acenaphthene	500	500	87 U	**120** J1	NA	59 U	**78** J1	**78** J1	**110** J1	34 U
Acenaphthylene	1300	1300	87 U	230 U	NA	59 U	140 U	**23** J1	45 U	17 U
Anthracene	960	960	87 U	**140** J1	NA	**37** J1	140 U	**130**	**190** J1	**24** J1
Benzo(a)anthracene	1300	1600	**130**	**470**	NA	**220**	**270**	**530**	**580**	**78** J1
Benzo(a)pyrene	1600	1600	**120**	**420**	NA	**230**	**280**	**550**	**620**	**190**
Benzo(b)fluoranthene			NA	NA	NA	NA	NA	**1100**	**1300**	**430**
Benzo(g,h,i)perylene	670	720	**140**	**430**	NA	**220**	**340**	**340**	**330**	**69** J1
Benzo(k)fluoranthene			NA	NA	NA	NA	NA	**350**	**440**	34 U
Total Benzofluoranthenes (d, e)	3200	3600	**320**	**810**	NA	**550**	**730**	NA	NA	NA
Chrysene	1400	2800	**300**	**860**	NA	**480**	**650**	**900**	**1000**	**340**
Dibenz(a,h)anthracene	230	230	87 U	230 U	NA	**69**	**110** J1	**86** J1	**90** J1	34 U
Dibenzofuran			87 U	230 U	NA	59 U	140 U	**62** J1	**90** J1	34 U
Fluoranthene	1700	2500	**350**	**1300**	NA	**700**	**920**	**1700**	**1800**	**210**
Fluorene	540	540	87 U	**140** J1	NA	59 U	**92** J1	**77** J1	**120** J1	34 U
Indeno(1,2,3-cd)pyrene	600	690	**69** J1	**320**	NA	**120**	**180**	**270**	**250**	**41** J1
2-Methylnaphthalene	670	670	87 U	230 U	NA	**32** J1	**90** J1	44 U	90 U	34 U
Naphthalene	2100	2100	87 U	**160** J1	NA	59 U	**89** J1	**100** J1	**190** J1	**48** J1
Total Naphthalenes			NA	**160** J	NA	**32** J1	**179** J	**100** J	**190** J	**48** J
Phenanthrene	1500	1500	**260**	**1300**	NA	**370**	**570**	**1000**	**1200**	**170**
Pyrene	2600	3300	**300**	**1100**	NA	**580**	**700**	**1100**	**1200**	**180**
cPAH TEQ			**175** J	**589**	NA	**331**	**416** J	**793** J	**896** J	**248** J
PCBs (µg/kg)										
Method SW8082										
Aroclor 1016			18 U	39 U	20 U	19 U	19 U	9.5 U	9.6 U	72 U
Aroclor 1221			18 U	39 U	20 U	19 U	19 U	12 U	12 U	92 U
Aroclor 1232			18 U	39 U	20 U	19 U	19 U	21 U	21 U	160 U
Aroclor 1242			18 U	39 U	20 U	19 U	19 U	8.7 U	8.8 U	66 U
Aroclor 1248			**49**	**82**	**38** J	**50**	**40**	8.7 U	8.8 U	66 U
Aroclor 1254			**120**	**170**	**89** J	**120**	**100**	**61** J	**100** J	**1600**
Aroclor 1260			**140** J	**120**	**65** J	**120** J	**87**	13 U	13 U	99 U
Total PCBs (d)	130	1000	**309** J	**372**	**192** J	**290** J	**227**	**61** J	**100** J	**1600**
TOTAL METALS (mg/kg)										
Methods 6010B/6020										
Antimony			0.3 U	**0.5**	0.3 U	0.2 U	0.3 U	**0.678**	**2.55**	**0.416**
Arsenic	57	93	**14.1**	**9.6**	**7.9**	**9.0**	**8.3**	0.723 U	**10.6**	**6.93**
Barium			**122**	**139**	**83.1**	**104**	**122**	**132**	**172**	**96.1**
Beryllium			**0.3**	**0.3**	0.3 U	**0.3**	**0.3**	**0.238** J1	**0.309** J1	**0.197** J1
Cadmium	5.1	6.7	**1.9**	**1.6**	**2.7**	**4.3**	**1.3**	**1.96**	**1.47**	**3.35**
Chromium	260	270	**142**	**66.3**	**49.5**	**79.6**	**77.9**	**94.8**	**97.7**	**22.3**
Copper	390	390	**78.0**	**67.7**	**53.4**	**80.2**	**80.1**	**77.1**	**84.2**	**36.3**
Lead	450	530	**148**	**178**	**75.6**	**158**	**125**	**53.7**	**201**	**45.4**
Nickel			**76.4**	**55.4**	**48.8**	**59.8**	**71.8**	**63.0**	**59.9**	**36.1**
Selenium			**0.8**	**0.7**	0.7 U	**0.6**	0.8 U	4.47 U	0.917 U	**1.70** J1
Silver	6.1	6.1	0.3 U	0.3 U	0.3 U	**0.2**	0.3 U	**0.946**	**0.467** J1	**0.535**
Zinc	410	960	**880**	**620**	**610**	**760**	**2060**	**320**	**343**	**348**
Method SW7199										
Chromium VI			0.551 U	0.567 U	0.544 U	0.423 U	**1.24**	**2.5**	**8.3**	**1.3**
Method SW7471A										
Mercury	0.41	0.59	**0.63**	**0.31**	**0.04**	**0.07**	**0.07**	**0.0453** J1	**0.0736** J1	**0.375**

TABLE 4
14-01 BUILDING NORTH AREA
BOEING ISAACSON-THOMPSON
REMEDIAL INVESTIGATION

Indicates concentration exceeds SQS but less than the CSL or the dry weight equivalent values [Lower Apparent Effect Threshold (LAET) and and 2LAET, respectively]

Indicates concentration exceeds the SQS and CSL or dry weight equivalent criteria.

(a) Dry weight equivalent criteria are based on the Puget Sound Apparent Effect Threshold Values (Barrick et al. 1988)

(b) SMS Sediment Quality Standard /Lower Apparent Effects Threshold

(c) SMS Cleanup Screening Level / Second Lower Apparent Effects Threshold

(d) Where chemical criteria in this table represent the sum of individual compounds or isomers, the following methods shall be applied:

(i) Where chemical analyses identify an undetected value for every individual compound/isomer, then the single highest detection limit shall represent the sum of the respective compound/isomers.

(ii) Where chemical analyses detect one or more individual compounds/isomers, only the detected concentrations will be added to represent the group sum.

(e) The total benzofluoranthenes criterion represents the sum of the concentrations of the "B," "J," and "K" isomers.

J = Indicates the analyte was positively identified; the associated numerical value is the approximate concentration of the analyte in the sample.

J1 = Laboratory flag indicating the analyte was positively identified; the associated concentration is approximate and less than the reporting limit, but equal to or greater than the detection limit.

U = Indicates the compound was not detected at or above the reporting limit.

TABLE 5
14-01 BUILDING WEST AREA
BOEING ISAACSON-THOMPSON
REMEDIAL INVESTIGATION

	Dry Weight Equivalent to SMS Criteria (a)		2011 Storm Drain Solids			2012 Source Material	
			IT-CBC	IT-CBD	IT-CBE/77/77B	IT-CB-77/77B/77E	IT-CB-C/D
			TL53G	TL53H	TL53I	6607152	6607153
			TL53	TL53	TL53	1300346	1300346
	SQS/LAET (b)	CSL/2LAET (c)	09/08/2011	09/08/2011	09/08/2011	04/03/2012	04/03/2012
SEMIVOLATILES (µg/kg)							
Method SW8270D							
Benzoic Acid	650	650	5900 UJ	4700 UJ	3300 UJ	81,000 U	100,000 U
Benzyl Alcohol	57	73	**2500**	**3500**	**1900**	16,000 U	20,000 U
4-Bromophenyl-phenylether			290 U	240 U	170 U	8100 U	10,000 U
Butylbenzylphthalate	63	900	**4000**	**1400** J	**530**	32,000 U	41,000 U
Di-n-Butylphthalate	1400	5100	**1000**	**500** J	**190**	32,000 U	41,000 U
Carbazole			**150** J	240 U	**110** J	8100 U	10,000 U
4-Chloro-3-methylphenol			1500 U	1200 U	840 U	8100 U	10,000 U
4-Chloroaniline			4000 U	3200 U	2300 U	8100 U	10,000 U
bis(2-Chloroethoxy) Methane			290 U	240 U	170 U	8100 U	10,000 U
Bis-(2-Chloroethyl) Ether			290 U	240 U	170 U	8100 U	10,000 U
2-Chloronaphthalene			290 U	240 U	170 U	3400 U	4300 U
2-Chlorophenol			290 U	240 U	170 U	8100 U	10,000 U
4-Chlorophenyl-phenylether			290 U	240 U	170 U	8100 U	10,000 U
2,2'-Oxybis(1-Chloropropane)			290 U	240 U	170 U	8100 U	10,000 U
1,2-Dichlorobenzene	35	50	290 U	240 U	170 U	8100 U	10,000 U
1,3-Dichlorobenzene			290 U	240 U	170 U	8100 U	10,000 U
1,4-Dichlorobenzene	110	110	290 U	240 U	170 U	8100 U	10,000 U
3,3'-Dichlorobenzidine			2200 U	1800 U	1200 U	48,000 U	61,000 U
2,4-Dichlorophenol			2900 U	2400 U	1700 U	8100 U	10,000 U
Diethylphthalate	200	1200	740 U	590 U	420 U	32,000 U	41,000 U
2,4-Dimethylphenol	29	29	590 U	470 U	330 U	4800 U	6100 U
Dimethylphthalate	71	160	**460**	**240**	170 U	32,000 U	41,000 U
4,6-Dinitro-2-Methylphenol			2900 U	2400 UJ	1700 U	81,000 U	100,000 U
2,4-Dinitrophenol			12000 U	10000 U	7100 U	150,000 U	180,000 U
2,4-Dinitrotoluene			1500 U	1200 U	840 U	32,000 U	41,000 U
2,6-Dinitrotoluene			1500 U	1200 U	840 U	8100 U	10,000 U
bis(2-Ethylhexyl)phthalate	1300	3100	**23000**	**22000** J	**4600**	32,000 U	41,000 U
Hexachlorobenzene	22	70	290 U	240 U	170 U	1600 U	2000 U
Hexachlorobutadiene	11	120	1500 U	1200 U	840 U	4800 U	6100 U
Hexachlorocyclopentadiene			5900 U	4700 U	3300 U	81,000 U	100,000 U
Hexachloroethane			290 U	240 U	170 U	16,000 U	20,000 U
Isophorone			290 U	240 U	170 U	8100 U	10,000 U
1-Methylnaphthalene			290 U	240 U	170 U	1600 U	2000 U
2-Methylphenol	63	63	290 U	240 U	170 U	4800 U	6100 U
4-Methylphenol	670	670	**190** J	**220** J	**110** J	**8200** J1	10,000 U
2-Nitroaniline			1500 U	1200 U	840 U	8100 U	10,000 U
3-Nitroaniline			1500 U	1200 U	840 U	32,000 U	41,000 U
4-Nitroaniline			1500 U	1200 U	840 U	32,000 U	41,000 U
Nitrobenzene			290 U	240 U	170 U	8100 U	10,000 U
2-Nitrophenol			1500 U	1200 U	840 U	8100 U	10,000 U
4-Nitrophenol			1500 U	1200 U	840 U	81,000 U	100,000 U
N-Nitroso-Di-N-Propylamine			290 U	240 U	170 U	8100 U	10,000 U
N-Nitrosodiphenylamine	28	40	290 U	240 U	170 U	4800 U	6100 U
Di-n-Octyl phthalate	6200	6200	**3800**	**2100** J	**180**	32,000 U	41,000 U
Pentachlorophenol	360	690	2900 U	2400 U	1700 U	16,000 U	20,000 U
Phenol	420	1200	**440**	**220** J	**100** J	8100 U	10,000 U
1,2,4-Trichlorobenzene	31	51	290 U	240 U	170 U	8100 U	10,000 U
2,4,5-Trichlorophenol			1500 U	1200 U	840 U	8100 U	10,000 U
2,4,6-Trichlorophenol			1500 U	1200 U	840 U	8100 U	10,000 U
PAHs (µg/kg)							
Method SW8270D-SIM							
Acenaphthene	500	500	**74**	**180**	**280**	**530** J. J1	**420** J1
Acenaphthylene	1300	1300	**31** J	**180**	**110**	**210** J. J1	140 U
Anthracene	960	960	**94**	**220** J	**360**	**1800** J	**670** J1
Benzo(a)anthracene	1300	1600	**400**	**420**	**2200**	**3900** J	**2000**
Benzo(a)pyrene	1600	1600	**390**	**420**	**2200**	**3200** J	**2300**
Benzo(b)fluoranthene						**5500** J	**5000**
Benzo(g,h,i)perylene	670	720	**500**	**290**	**900**	**1400** J	**940**
Benzo(k)fluoranthene						**2700** J	**1900**
Total Benzofluoranthenes (d, e)	3200	3600	**1100**	**960**	**4200**		
Chrysene	1400	2800	**820**	**700**	**2500**	**5400** J	**3500**
Dibenz(a,h)anthracene	230	230	**110**	**160**	**260**	**400** J. J1	270 U
Dibenzofuran			**78**	**180** J	**140**	**430** J. J1	**290** J1
Fluoranthene	1700	2500	**1600**	**1200**	**5800**	**11,000** J	**6800**
Fluorene	540	540	**120**	**230** J	**290**	**660** J	**480** J1
Indeno(1,2,3-cd)pyrene	600	690	**320**	**260** J	**970**	**1200** J	**810**
2-Methylnaphthalene	670	670	**88**	**180**	**40**	**300** J. J1	270 U
Naphthalene	2100	2100	**100**	**190** J	**57**	**700** J	**500** J1
Total Naphthalenes						**1000** J	**500** J
Phenanthrene	1500	1500	**960**	**830**	**3200**	**8200** J	**4500**
Pyrene	2600	3300	**1200**	**890**	**4400**	**13,000** J	**5100**
cPAH TEQ			**47150**	**42640**	**169160**	**4624** J	**3306**
PCBs (µg/kg)							
Method SW8082							
Aroclor 1016			20 U	20 U	19 U	23 U	29 U
Aroclor 1221			20 U	20 U	19 U	30 U	38 U
Aroclor 1232			20 U	20 U	19 U	52 U	65 U
Aroclor 1242			20 U	20 U	19 U	21 U	27 U
Aroclor 1248			53 U	40 U	19 U	21 U	27 U
Aroclor 1254			**100** J	**170** J	**44**	**92** J, J1	**270** J
Aroclor 1260			**140**	**140** P	**44**	**110** J	40 U
Total PCBs (d)	130	1000	**240** J	**310** JP	**88**	**202** J	**270** J
TOTAL METALS (mg/kg)							
Methods 6010B/6020							
Antimony			**0.7**	**1.0** J	0.3 U	**3.06**	**5.30**
Arsenic	57	93	**12.5**	**12.3**	**8.2**	**14.8**	**22.7**
Barium			**185**	**140**	**152**	**221**	**313**
Beryllium			0.3 U	0.5 U	0.3 U	**0.262** J1	**0.327** J1
Cadmium	5.1	6.7	**117**	**154** J	**39.5**	**10.1**	**69.2**
Chromium	260	270	**170**	**158** J	**72.9**	**156**	**178**
Copper	390	390	**224**	**190**	**84.4**	**180**	**265**
Lead	450	530	**308**	**245**	**96.4**	**92.9**	**137**
Nickel			**92.9**	**145**	**65.8**	**64.8**	**94.9**
Selenium			0.8 U	1 U	0.7 U	2.15 U	2.75 U
Silver	6.1	6.1	**1.5**	**1.9**	**0.3**	**2.00**	**2.68**
Zinc	410	960	**2240**	**2090**	**860**	**1050**	**1660**
Method SW7199							
Chromium VI			0.712 U	0.834 U	0.557 U	0.65 U	**10.1**
Method SW7471A							
Mercury	0.41	0.59	**0.13**	**0.27** J	**0.17**	**0.769**	**0.183** J1

TABLE 5
14-01 BUILDING WEST AREA
BOEING ISAACSON-THOMPSON
REMEDIAL INVESTIGATION

Indicates concentration exceeds SQS but less than the CSL or the dry weight equivalent values [Lower Apparent Effect Threshold (LAET) and and 2LAET, respectively]

Indicates concentration exceeds the SQS and CSL or dry weight equivalent criteria.

(a) Dry weight equivalent criteria are based on the Puget Sound Apparent Effect Threshold Values (Barrick et al. 1988)

(b) SMS Sediment Quality Standard /Lower Apparent Effects Threshold

(c) SMS Cleanup Screening Level / Second Lower Apparent Effects Threshold

(d) Where chemical criteria in this table represent the sum of individual compounds or isomers, the following methods shall be applied:

(i) Where chemical analyses identify an undetected value for every individual compound/isomer, then the single highest detection limit shall represent the sum of the respective compound/isomers.

(ii) Where chemical analyses detect one or more individual compounds/isomers, only the detected concentrations will be added to represent the group sum.

(e) The total benzofluoranthenes criterion represents the sum of the concentrations of the "B," "J," and "K" isomers.

J = Indicates the analyte was positively identified; the associated numerical value is the approximate concentration of the analyte in the sample.

J1 = Laboratory flag indicating the analyte was positively identified; the associated concentration is approximate and less than the reporting limit, but equal to or greater than the detection limit.

P = The analyte was detected on both chromatographic columns but the quantified values differ by 40% RPD with no obvious chromatographic interference. The higher of the two values is reported by the laboratory.

U = Indicates the compound was not detected at or above the reporting limit.

TABLE 6
14-13 BUILDING AREA
BOEING ISAACSON-THOMPSON
REMEDIAL INVESTIGATION

	Dry Weight Equivalent to SMS Criteria (a)		2011 Storm Drain Solids				2012 Source Material	
			IT-CB81/82	IT-CB83	IT-CB90/91	IT-OWS79	IT-PAINT-06	IT-SURFACE-04
			TL53B	TL53D	TL53C	TL53E	6612544	6607142
			TL53	TL53	TL53	TL53	1301439	1300346
	SQS/LAET (b)	CSL/2LAET (c)	09/08/2011	09/08/2011	09/08/2011	09/08/2011	04/10/2012	04/03/2012
SEMIVOLATILES (µg/kg)								
Method SW8270D								
Benzoic Acid	650	650	5800 UJ	5800 UJ	1600 UJ	7100 UJ	**35,000**	11,000 U
Benzyl Alcohol	57	73	290 U	290 U	78 U	**6500**	2000 U	2200 U
4-Bromophenyl-phenylether			290 U	290 U	78 U	360 U	1000 U	1100 U
Butylbenzylphthalate	63	900	**1500**	**950**	**390**	**1400**	4000 U	4400 U
Di-n-Butylphthalate	1400	5100	**15000**	**200** J1	**320**	**600**	4000 U	4400 U
Carbazole			290 U	290 U	**39** J1	**410**	1000 U	1100 U
4-Chloro-3-methylphenol			1500 U	1400 U	390 U	1800 U	1000 U	1100 U
4-Chloroaniline			4000 U	3900 U	1000 U	4800 U	1000 U	1100 U
bis(2-Chloroethoxy) Methane			290 U	290 U	78 U	360 U	1000 U	1100 U
Bis-(2-Chloroethyl) Ether			290 U	290 U	78 U	360 U	1000 U	1100 U
2-Chloronaphthalene			290 U	290 U	78 U	360 U	420 U	460 U
2-Chlorophenol			290 U	290 U	78 U	360 U	1000 U	1100 U
4-Chlorophenyl-phenylether			290 UJ	290 U	78 U	360 U	1000 U	1100 U
2,2'-Oxybis(1-Chloropropane)			290 U	290 U	78 U	360 U	1000 U	1100 U
1,2-Dichlorobenzene	35	50	290 U	290 U	78 U	360 U	1000 U	1100 U
1,3-Dichlorobenzene			290 U	290 U	78 U	360 U	1000 U	1100 U
1,4-Dichlorobenzene	110	110	290 U	290 U	78 U	360 U	1000 U	1100 U
3,3'-Dichlorobenzidine			2200 U	2200 U	580 U	2700 U	6000 U	6600 U
2,4-Dichlorophenol			2900 U	2900 U	780 U	3600 U	1000 U	1100 U
Diethylphthalate	200	1200	730 U	720 U	200 U	890 U	4000 U	4400 U
2,4-Dimethylphenol	29	29	580 U	580 U	160 U	710 U	600 U	660 U
Dimethylphthalate	71	160	290 U	**320**	**39** J1	**320** J1	4000 U	4400 U
4,6-Dinitro-2-Methylphenol			2900 U	2900 U	780 U	3600 U	10,000 U	11,000 U
2,4-Dinitrophenol			12000 U	12000 U	3300 U	15000 U	18,000 U	20,000 U
2,4-Dinitrotoluene			1500 U	1400 U	390 U	1800 U	4000 U	4400 U
2,6-Dinitrotoluene			1500 U	1400 U	390 U	1800 U	1000 U	1100 U
bis(2-Ethylhexyl)phthalate	1300	3100	**1800**	**4500**	**4000**	**22000**	4000 U	**9000** J1
Hexachlorobenzene	22	70	290 U	290 U	78 U	360 U	200 U	220 U
Hexachlorobutadiene	11	120	1500 U	1400 U	390 U	1800 U	600 U	660 U
Hexachlorocyclopentadiene			5800 U	5800 U	1600 U	7100 U	10,000 U	11,000 U
Hexachloroethane			290 U	290 U	78 U	360 U	2000 U	2200 U
Isophorone			290 U	290 U	78 U	360 U	1000 U	1100 U
1-Methylnaphthalene			290 U	290 U	78 U	360 U	200 U	220 U
2-Methylphenol	63	63	290 U	290 U	78 U	360 U	600 U	660 U
4-Methylphenol	670	670	580 U	580 U	**82** J1	**510** J1	1000 U	1100 U
2-Nitroaniline			1500 U	1400 U	390 U	1800 U	1000 U	1100 U
3-Nitroaniline			1500 U	1400 U	390 U	1800 U	4000 U	4400 U
4-Nitroaniline			1500 U	1400 U	390 U	1800 U	4000 U	4400 U
Nitrobenzene			290 U	290 U	78 U	360 U	1000 U	1100 U
2-Nitrophenol			1500 U	1400 U	390 U	1800 U	1000 U	1100 U
4-Nitrophenol			1500 U	1400 U	390 U	1800 U	10,000 U	11,000 U
N-Nitroso-Di-N-Propylamine			290 U	290 U	78 U	360 U	1000 U	1100 U
N-Nitrosodiphenylamine	28	40	290 U	290 U	78 U	360 U	600 U	660 U
Di-n-Octyl phthalate	6200	6200	**570**	290 U	**280**	**1800**	4000 U	4400 U
Pentachlorophenol	360	690	2900 U	**1600** J1	780 U	3600 U	2000 U	**15,000**
Phenol	420	1200	290 U	**160** J1	**82**	**460**	1000 U	1100 U
1,2,4-Trichlorobenzene	31	51	290 U	290 U	78 U	360 U	1000 U	1100 U
2,4,5-Trichlorophenol			1500 U	1400 U	390 U	1800 U	1000 U	1100 U
2,4,6-Trichlorophenol			1500 U	1400 U	390 U	1800 U	1000 U	1100 U

TABLE 6
14-13 BUILDING AREA
BOEING ISAACSON-THOMPSON
REMEDIAL INVESTIGATION

	Dry Weight Equivalent to SMS Criteria (a)		IT-CB81/82	IT-CB83	IT-CB90/91	IT-OWS79	IT-PAINT-06	IT-SURFACE-04
			TL53B	TL53D	TL53C	TL53E	6612544	6607142
			TL53	TL53	TL53	TL53	1301439	1300346
	SQS/LAET (b)	CSL/2LAET (c)	09/08/2011	09/08/2011	09/08/2011	09/08/2011	04/10/2012	04/03/2012
PAHs (µg/kg)								
Method SW8270D-SIM								
Acenaphthene	500	500	**16**	**58**	**25** J1	**480**	400 U	88 U
Acenaphthylene	1300	1300	**11** J1	**22** J1	29 U	**44** J1	200 U	44 U
Anthracene	960	960	**28**	**72**	**36**	**670**	200 U	**130** J1
Benzo(a)anthracene	1300	1600	**120**	**210**	**140**	**1500**	400 U	**290**
Benzo(a)pyrene	1600	1600	**130**	**240**	**120**	**1200**	400 U	**400**
Benzo(b)fluoranthene			NA	NA	NA	NA	400 U	**1000**
Benzo(g,h,i)perylene	670	720	**140**	**160**	**89**	**610**	400 U	**210** J1
Benzo(k)fluoranthene			NA	NA	NA	NA	400 U	**330**
Total Benzofluoranthenes (d, e)	3200	3600	**310**	**590**	**270**	**2600**	NA	NA
Chrysene	1400	2800	**240**	**520**	**220**	**1900**	200 U	**980**
Dibenz(a,h)anthracene	230	230	**36**	**39**	**23** J1	**170**	400 U	88 U
Dibenzofuran			**28**	**50**	**20** J1	**300**	400 U	88 U
Fluoranthene	1700	2500	**440**	**870**	**410**	**4500**	400 U	**1300**
Fluorene	540	540	**31**	**40**	**43**	**560**	400 U	**89** J1
Indeno(1,2,3-cd)pyrene	600	690	**96**	**150**	**68**	**530**	400 U	**180** J1
2-Methylnaphthalene	670	670	**33**	**43**	**17** J1	**200**	400 U	**89** J1
Naphthalene	2100	2100	**34**	**62**	**19** J1	**300**	**470** J1	**180** J1
Total Naphthalenes			**67**	**105**	**36** J	**500**	**470** J	**269** J
Phenanthrene	1500	1500	**320**	**570**	**280**	**3600**	400 U	**1000**
Pyrene	2600	3300	**320**	**610**	**320**	**3500**	400 U	**1000**
cPAH TEQ			**189**	**344**	**172** J	**1699**	ND	**590** J
PCBs (µg/kg)								
Method SW8082								
Aroclor 1016			19 U	14 U	20 U	19 U	360 U	95 U
Aroclor 1221			19 U	14 U	20 U	19 U	460 U	120 U
Aroclor 1232			19 U	14 U	20 U	19 U	800 U	210 U
Aroclor 1242			19 U	14 U	20 U	19 U	330 U	87 U
Aroclor 1248			19 U	56 U	20 U	75 U	330 U	87 U
Aroclor 1254			**52** J	**180** J	**45** J	**180** J	**5000**	**920**
Aroclor 1260			**53**	**110**	**38**	**180**	490 U	130 U
Total PCBs (d)	130	1000	**105** J	**290** J	**83** J	**360** J	**5000**	**920**
TOTAL METALS (mg/kg)								
Methods 6010B/6020								
Antimony			0.3 U	0.5 U	0.2 U	**0.6**	**0.181** J1	**2.12**
Arsenic	57	93	**6.5**	**18.8**	**4.6**	**20.0**	**2.86**	**31.4**
Barium			**118**	**157**	**125**	**298**	**3170**	**222**
Beryllium			0.3 U	**0.5**	0.2 U	0.5 U	**0.0853** J1	**0.265** J1
Cadmium	5.1	6.7	**6.6**	**14.7**	**4.8**	**38.8**	**1.25**	**4.37**
Chromium	260	270	**61.2**	**152**	**37.7**	**200**	**36.0**	**172**
Copper	390	390	**74.4**	**233**	**99.0**	**315**	**46.2**	**189**
Lead	450	530	**51.3**	**175**	**31.1**	**296**	**112**	**236**
Nickel			**47.6**	**86**	**45.1**	**100**	**13.2**	**82.4**
Selenium			0.7 U	**1**	0.6 U	**2**	**1.34** J1	1.75 U
Silver	6.1	6.1	0.3 U	**0.7**	0.2 U	**1.4**	**0.190** J1	**0.888** J1
Zinc	410	960	**359**	**1460**	**265**	**3490**	**1580**	**1330**
Method SW7199								
Chromium VI			0.599 U	0.929 U	0.525 U	**1.25**	**3.3**	0.52 U
Method SW7471A								
Mercury	0.41	0.59	**0.05**	**0.17**	**0.03**	**0.35**	**45.2**	**0.546**

TABLE 6
14-13 BUILDING AREA
BOEING ISAACSON-THOMPSON
REMEDIAL INVESTIGATION

Indicates concentration exceeds SQS but less than the CSL or the dry weight equivalent values [Lower Apparent Effect Threshold (LAET) and and 2LAET, respectively]

Indicates concentration exceeds the SQS and CSL or dry weight equivalent criteria.

(a) Dry weight equivalent criteria are based on the Puget Sound Apparent Effect Threshold Values (Barrick et al. 1988)

(b) SMS Sediment Quality Standard /Lower Apparent Effects Threshold

(c) SMS Cleanup Screening Level / Second Lower Apparent Effects Threshold

(d) Where chemical criteria in this table represent the sum of individual compounds or isomers, the following methods shall be applied:

(i) Where chemical analyses identify an undetected value for every individual compound/isomer, then the single highest detection limit shall represent the sum of the respective compound/isomers.

(ii) Where chemical analyses detect one or more individual compounds/isomers, only the detected concentrations will be added to represent the group sum.

(e) The total benzofluoranthenes criterion represents the sum of the concentrations of the "B," "J," and "K" isomers.

J = Indicates the analyte was positively identified; the associated numerical value is the approximate concentration of the analyte in the sample.

J1 = Laboratory flag indicating the analyte was positively identified; the associated concentration is approximate and less than the reporting limit, but equal to or greater than the detection limit.

U = Indicates the compound was not detected at or above the reporting limit.

TABLE 7
14-02/14-03 BUILDING AREA
BOEING ISAACSON-THOMPSON
REMEDIAL INVESTIGATION

	Dry Weight Equivalent to SMS Criteria (a)		2011 Storm Drain Solids										
			IT-CB24	IT-CB25	IT-CB26	IT-CB27	IT-CB28	IT-CB29	IT-CB30	IT-CB36	IT-CB39/86/85	IT-CBA	IT-OWS23
			TL74G	TL74H	TL74I	TL74E	TO80A	TL29B	TL29C	TL74B	TL74A	TL29A	TL53L
			TL74	TL74	TL74	TL74	TO80	TL29	TL29	TL74	TL74	TL29	TL53
	SQS/LAET (b)	CSL/2LAET (c)	09/09/2011	09/09/2011	09/09/2011	09/09/2011	9/28/2011	09/07/2011	09/07/2011	09/09/2011	09/09/2011	09/07/2011	09/08/2011
SEMIVOLATILES (µg/kg)													
Method SW8270D													
Benzoic Acid	650	650	5700 U	6000 U	5800 U	1800 U	4600 U	**770** J	**590** J	2400 U	**1400** J1	**330** J	10000 UJ
Benzyl Alcohol	57	73	**840**	**520**	**550**	**110**	**310**	**150**	**130**	120 U	180 U	**210**	**7200**
4-Bromophenyl-phenylether			280 U	300 U	290 U	90 U	230 U	59 U	59 U	120 U	180 U	56 U	500 U
Butylbenzylphthalate	63	900	**3100**	**1500**	**1400**	**750**	**1100**	**2200**	**1100**	120 U	**670**	**980**	**900**
Di-n-Butylphthalate	1400	5100	**360**	**510**	**600**	**380**	**800**	**610**	**110**	120 U	**290**	**1100**	**350** J1
Carbazole			280 U	300 U	290 U	90 U	**140** J1	**1200**	**500**	120 U	**2800**	**56**	500 U
4-Chloro-3-methylphenol			1400 U	1500 U	1500 U	450 U	1200 U	300 U	300 U	610 U	920 U	280 U	2500 U
4-Chloroaniline			3800 U	4000 U	3900 U	1200 U	3100 U	800 U	800 U	1600 U	2500 U	760 U	6800 U
bis(2-Chloroethoxy) Methane			280 U	300 U	290 U	90 U	230 U	59 U	59 U	120 U	180 U	56 U	500 U
Bis-(2-Chloroethyl) Ether			280 U	300 U	290 U	90 U	230 U	59 U	59 U	120 U	180 U	56 U	500 U
2-Chloronaphthalene			280 U	300 U	290 U	90 U	230 U	59 U	59 U	120 U	180 U	56 U	500 U
2-Chlorophenol			280 U	300 U	290 U	90 U	230 U	59 U	59 U	120 U	180 U	56 U	500 U
4-Chlorophenyl-phenylether			280 U	300 U	290 U	90 U	230 U	59 UJ	59 UJ	120 U	180 U	56 UJ	500 U
2,2'-Oxybis(1-Chloropropane)			280 U	300 U	290 U	90 U	230 U	59 U	59 U	120 U	180 U	56 U	500 U
1,2-Dichlorobenzene	35	50	280 U	300 U	290 U	90 U	230 U	59 U	59 U	120 U	180 U	56 U	500 U
1,3-Dichlorobenzene			280 U	300 U	290 U	90 U	230 U	59 U	59 U	120 U	180 U	56 U	500 U
1,4-Dichlorobenzene	110	110	280 U	300 U	290 U	90 U	230 U	59 U	59 U	120 U	180 U	56 U	500 U
3,3'-Dichlorobenzidine			2100 U	2200 U	2200 U	680 U	1700 U	450 U	440 U	910 U	1400 U	420 U	3800 U
2,4-Dichlorophenol			2800 U	3000 U	2900 U	900 U	2300 U	590 U	590 U	1200 U	1800 U	560 U	5000 U
Diethylphthalate	200	1200	710 U	750 U	730 U	230 U	580 U	150 U	150 U	300 U	460 U	140 U	1200 U
2,4-Dimethylphenol	29	29	570 U	600 U	580 U	180 U	460 U	120 U	120 U	240 U	370 U	110 U	1000 U
Dimethylphthalate	71	160	**230** J1	**160** J1	**260** J1	**160**	**290**	**1500**	**450**	120 U	**150** J1	**260**	500 U
4,6-Dinitro-2-Methylphenol			2800 U	3000 U	2900 U	900 U	2300 U	590 U	590 U	1200 U	1800 U	560 U	5000 U
2,4-Dinitrophenol			12000 U	13000 U	12000 U	3800 U	9800 U	2500 U	2500 U	5200 U	7800 U	2400 U	21000 U
2,4-Dinitrotoluene			1400 U	1500 U	1500 U	450 U	1200 U	300 U	300 U	610 U	920 U	280 U	2500 U
2,6-Dinitrotoluene			1400 U	1500 U	1500 U	450 U	1200 U	300 U	300 U	610 U	920 U	280 U	2500 U
bis(2-Ethylhexyl)phthalate	1300	3100	**6000**	**5000**	**11000**	**3700**	**3500**	**13000**	**2300**	**1200**	**4500**	**12000**	**15000**
Hexachlorobenzene	22	70	280 U	300 U	290 U	90 U	230 U	59 U	59 U	120 U	180 U	56 U	500 U
Hexachlorobutadiene	11	120	1400 U	1500 U	1500 U	450 U	1200 U	300 U	300 U	610 U	920 U	280 U	2500 U
Hexachlorocyclopentadiene			5700 U	6000 U	5800 U	1800 U	4600 U	1200 U	1200 U	2400 U	3700 U	1100 U	10000 U
Hexachloroethane			280 U	300 U	290 U	90 U	230 U	59 U	59 U	120 U	180 U	56 U	500 U
Isophorone			280 U	300 U	290 U	90 U	230 U	59 U	59 U	120 U	180 U	56 U	500 U
1-Methylnaphthalene			280 U	300 U	290 U	90 U	230 U	**110**	**41** J1	120 U	**160** J1	56 U	500 U
2-Methylphenol	63	63	280 U	300 U	290 U	90 U	230 U	59 U	59 U	120 U	180 U	56 U	500 U
4-Methylphenol	670	670	**260** J1	**190** J1	**320** J1	180 U	**990**	**500**	**140**	**67** J1	**540**	**110**	**11000**
2-Nitroaniline			1400 U	1500 U	1500 U	450 U	1200 U	300 U	300 U	610 U	920 U	280 U	2500 U
3-Nitroaniline			1400 U	1500 U	1500 U	450 U	1200 U	300 U	300 U	610 U	920 U	280 U	2500 U
4-Nitroaniline			1400 U	1500 U	1500 U	450 U	1200 U	300 U	300 U	610 U	920 U	280 U	2500 U
Nitrobenzene			280 U	300 U	290 U	90 U	230 U	59 U	59 U	120 U	180 U	56 U	500 U
2-Nitrophenol			1400 U	1500 U	1500 U	450 U	1200 U	300 U	300 U	610 U	920 U	280 U	2500 U
4-Nitrophenol			1400 U	1500 U	1500 U	450 U	1200 U	300 U	300 U	610 U	920 U	280 U	2500 U
N-Nitroso-Di-N-Propylamine			280 U	300 U	290 U	90 U	230 U	59 U	59 U	120 U	180 U	56 U	500 U
N-Nitrosodiphenylamine	28	40	280 U	300 U	290 U	90 U	230 U	59 U	59 U	120 U	180 U	56 U	500 U
Di-n-Octyl phthalate	6200	6200	**500**	**430**	**230** J1	**54** J1	**240**	59 U	59 U	120 U	**100** J1	**190**	**2000**
Pentachlorophenol	360	690	2800 U	3000 U	2900 U	900 U	2300 U	590 U	590 U	1200 U	1800 U	560 U	5000 U
Phenol	420	1200	280 U	300 U	**190** J1	90 U	**170** J1	**320**	**180**	120 U	**200**	**150**	**500**
1,2,4-Trichlorobenzene	31	51	280 U	300 U	290 U	90 U	230 U	59 U	59 U	120 U	180 U	56 U	500 U
2,4,5-Trichlorophenol			1400 U	1500 U	1500 U	450 U	1200 U	300 U	300 U	610 U	920 U	280 U	2500 U
2,4,6-Trichlorophenol			1400 U	1500 U	1500 U	450 U	1200 U	300 U	300 U	610 U	920 U	280 U	2500 U

TABLE 7
14-02/14-03 BUILDING AREA
BOEING ISAACSON-THOMPSON
REMEDIAL INVESTIGATION

	Dry Weight Equivalent to SMS Criteria (a)		2011 Storm Drain Solids										
			IT-CB24	IT-CB25	IT-CB26	IT-CB27	IT-CB28	IT-CB29	IT-CB30	IT-CB36	IT-CB39/86/85	IT-CBA	IT-OWS23
			TL74G	TL74H	TL74I	TL74E	TO80A	TL29B	TL29C	TL74B	TL74A	TL29A	TL53L
			TL74	TL74	TL74	TL74	TO80	TL29	TL29	TL74	TL74	TL29	TL53
	SQS/LAET (b)	CSL/2LAET (c)	09/09/2011	09/09/2011	09/09/2011	09/09/2011	9/28/2011	09/07/2011	09/07/2011	09/09/2011	09/09/2011	09/07/2011	09/08/2011
PAHs (µg/kg)													
Method SW8270D-SIM													
Acenaphthene	500	500	66	45 J1	39 J1	9.0 J1	34	750 J	110	98 U	85 J1	52	140 J1
Acenaphthylene	1300	1300	35	60 U	58 U	14 U	24	440 J	84	98 U	140 U	21 J1	200 U
Anthracene	960	960	69	73	41 J1	19	74	1300 J	270	98 U	140 U	76	160 J1
Benzo(a)anthracene	1300	1600	310	290	170	120	350	3900	1000	120	280	260	590
Benzo(a)pyrene	1600	1600	340	280	200	140	370	4800	1000	140	410	260	600
Benzo(b)fluoranthene			NA	NA	NA	NA	NA	NA	NA	NA	NA	NA	NA
Benzo(g,h,i)perylene	670	720	260	280	160	99	300	3900	950	130	420	310	760
Benzo(k)fluoranthene			NA	NA	NA	NA	NA	NA	NA	NA	NA	NA	NA
Total Benzofluoranthenes (d, e)	3200	3600	780	650	500	300	780	12000	4200	280	940	580	1600
Chrysene	1400	2800	560	600	350	210	630	8400	3400	330	910	460	1500
Dibenz(a,h)anthracene	230	230	51	39 J1	58 U	20	84	1100 J	250	98 U	140 J1	56	130 J1
Dibenzofuran			67	50 J1	47 J1	12 J1	65	760 J	120	98 U	150	46	130 J1
Fluoranthene	1700	2500	1200	880	660	370	1200	15000	3000	210	1900	790	2100
Fluorene	540	540	80	50 J1	45 J1	13 J1	59	1100 J	150	98 U	130 J1	80	190 J1
Indeno(1,2,3-cd)pyrene	600	690	200	200	110	72	260	3700	970	98 U	250	180	450
2-Methylnaphthalene	670	670	54	76	42 J1	12 J1	39	460 J	59	98 U	81 J1	43	130 J1
Naphthalene	2100	2100	78	75	58 U	14	61	760 J	110	98 U	230	51	220
Total Naphthalenes			132	151	42 J	26 J	100	1220 J	169	NA	311 J	94	350 J
Phenanthrene	1500	1500	800	570	440	190	780	9600	1900	180	1600	590	1400
Pyrene	2600	3300	880	740	480	290	900	12000	2600	240	1400	570	1600
cPAH TEQ			480	404 J	282	193	524	6954 J	1676	183	580 J	372	892 J
PCBs (µg/kg)													
Method SW8082													
Aroclor 1016			19 UJ	19 U	19 U	20 U	19 U	19 U	19 U	20 U	92 U	20 U	39 U
Aroclor 1221			19 UJ	19 U	19 U	20 U	19 U	19 U	19 U	20 U	92 U	20 U	39 U
Aroclor 1232			19 UJ	19 U	19 U	20 U	19 U	19 U	19 U	20 U	92 U	20 U	39 U
Aroclor 1242			19 UJ	19 U	19 U	20 U	19 U	19 U	19 U	20 U	92 U	20 U	39 U
Aroclor 1248			28 J	19 U	19 U	50	42	170 U	75 U	22	92 U	58 U	94
Aroclor 1254			100 J	44	43	170	90	480	180	49	190	160	210
Aroclor 1260			49 J	64 J	55 J	68 J	74	410	91	69 J	180 J	92	160
Total PCBs (d)	130	1000	177 J	108 J	98 J	288 J	206	890	271	140 J	370 J	252	464
TOTAL METALS (mg/kg)													
Methods 6010B/6020													
Antimony			1.1	0.4 U	0.9	0.2	2.0	3.0	1.2	0.3 U	0.4 UJ	0.7	0.7
Arsenic	57	93	13.1	11.7	14.1	10.8	19.3	58.0	18.3	8.2	13.1	14.3	18.4
Barium			169	138	179	164	122	197	224	150	119	181	545
Beryllium			0.6	0.4 U	0.4 U	0.3	0.5 U	0.5	0.5 U	0.3	0.4 U	0.3	0.5 U
Cadmium	5.1	6.7	25.2	13.8	17.3	15.5	23.7	38.1	9.0	2.1	13.0	17.1	7.2
Chromium	260	270	116	97.1	106	61.9	200	492	388	45.8	128 J	90.5	284
Copper	390	390	168	114	124	78.00	202	606	258	50.2	110	117	312
Lead	450	530	108	98.9	96.8	55.1	147	568	246	41.4	168 J	119	268
Nickel			65	61.7	69	51.3	122	226	147	54.4	87	67.5	127
Selenium			1	0.9 U	1 U	0.5 U	1 U	3	2	0.7	1	0.7	2
Silver	6.1	6.1	1.0	1.1	0.5	0.3	0.7	1.9	1.1	0.3 U	0.5	0.4	0.6
Zinc	410	960	1120	1000	1530	1860	2390	6640	2240	380	1050	1370	3390
Method SW7199													
Chromium VI			0.837 U	0.713 U	0.817 U	0.399 U	1.08 U	0.915 U	0.824 U	0.539 U	0.951	0.574 U	1.04 U
Method SW7471A													
Mercury	0.41	0.59	0.11	0.18	0.12	0.12	1.57	0.72	0.23	0.04	0.09	0.08	0.22

TABLE 7
14-02/14-03 BUILDING AREA
BOEING ISAACSON-THOMPSON
REMEDIAL INVESTIGATION

	Dry Weight Equivalent to SMS Criteria (a)		2012 Source Material								
			IT-PAINT-01-120410	IT-PAINT-02	IT-PAINT-03	IT-PAINT-04	IT-PAINT-05	IT-SURFACE-01	IT-SURFACE-02	IT-SURFACE-03	IT-SURFACE-13
			6612539	6612540	6612541	6612542	6612543	6607139	6607140	6607141	6607154
			1301439	1301439	1301439	1301439	1301439	1300346	1300346	1300346	1300346
	SQS/LAET (b)	CSL/2LAET (c)	04/10/2012	04/10/2012	04/10/2012	04/10/2012	04/10/2012	04/03/2012	04/03/2012	04/03/2012	04/04/2012
SEMIVOLATILES (µg/kg)											
Method SW8270D											
Benzoic Acid	650	650	**1900** J1	**37,000**	**70,000**	**35,000**	**59,000**	5500 U	6300 U	4900 UJ	6800 U
Benzyl Alcohol	57	73	200 U	2000 U	2000 U	2000 U	2000 U	1100 U	1300 U	980 U	1400 U
4-Bromophenyl-phenylether			100 U	1000 U	1000 U	1000 U	1000 U	550 U	630 U	490 U	680 U
Butylbenzylphthalate	63	900	400 U	4000 U	4000 U	4000 U	4000 U	2200 U	2500 U	2000 U	2700 U
Di-n-Butylphthalate	1400	5100	**1700**	4000 U	4000 U	4000 U	4000 U	**20,000**	2500 U	2000 UJ	2700 U
Carbazole			100 U	1000 U	1000 U	1000 U	1000 U	550 U	630 U	490 U	680 U
4-Chloro-3-methylphenol			100 U	1000 U	1000 U	1000 U	1000 U	550 U	630 U	490 U	680 U
4-Chloroaniline			100 U	1000 U	1000 U	1000 U	1000 U	550 U	630 U	490 U	680 U
bis(2-Chloroethoxy) Methane			100 U	1000 U	1000 U	1000 U	1000 U	550 U	630 U	490 U	680 U
Bis-(2-Chloroethyl) Ether			100 U	1000 U	1000 U	1000 U	1000 U	550 U	630 U	490 U	680 U
2-Chloronaphthalene			42 U	420 U	420 U	420 U	420 U	230 U	270 U	210 U	290 U
2-Chlorophenol			100 U	1000 U	1000 U	1000 U	1000 U	550 U	630 U	490 U	680 U
4-Chlorophenyl-phenylether			100 U	1000 U	1000 U	1000 U	1000 U	550 U	630 U	490 U	680 U
2,2'-Oxybis(1-Chloropropane)			100 U	1000 U	1000 U	1000 U	1000 U	550 U	630 U	490 U	680 U
1,2-Dichlorobenzene	35	50	100 U	1000 U	1000 U	1000 U	1000 U	550 U	630 U	490 U	680 U
1,3-Dichlorobenzene			100 U	1000 U	1000 U	1000 U	1000 U	550 U	630 U	490 U	680 U
1,4-Dichlorobenzene	110	110	100 U	1000 U	**6400**	1000 U	1000 U	550 U	630 U	490 U	680 U
3,3'-Dichlorobenzidine			600 U	6000 U	6000 U	6000 U	6000 U	3300 U	3800 U	2900 UJ	4100 U
2,4-Dichlorophenol			100 U	1000 U	1000 U	1000 U	1000 U	550 U	630 U	490 U	680 U
Diethylphthalate	200	1200	400 U	4000 U	4000 U	4000 U	4000 U	2200 U	2500 U	2000 UJ	2700 U
2,4-Dimethylphenol	29	29	60 U	600 U	600 U	600 U	600 U	330 U	380 U	290 U	410 U
Dimethylphthalate	71	160	400 U	4000 U	4000 U	**33,000**	4000 U	2200 U	2500 U	2000 UJ	2700 U
4,6-Dinitro-2-Methylphenol			1000 U	10,000 U	10,000 U	10,000 U	10,000 U	5500 U	6300 U	4900 UJ	6800 U
2,4-Dinitrophenol			1800 U	18,000 U	18,000 U	18,000 U	18,000 U	9800 U	11,000 U	8800 UJ	12,000 U
2,4-Dinitrotoluene			400 U	4000 U	4000 U	4000 U	4000 U	2200 U	2500 U	2000 UJ	2700 U
2,6-Dinitrotoluene			100 U	1000 U	1000 U	1000 U	1000 U	550 U	630 U	490 U	680 U
bis(2-Ethylhexyl)phthalate	1300	3100	**670,000**	**1,100,000**	**3,800,000**	**79,000**	4000 U	**36,000**	**2900** J1	**5800**	**9100**
Hexachlorobenzene	22	70	20 U	200 U	200 U	200 U	200 U	110 U	130 U	98 U	140 U
Hexachlorobutadiene	11	120	60 U	600 U	600 U	600 U	600 U	330 U	380 U	290 U	410 U
Hexachlorocyclopentadiene			1000 U	10,000 U	10,000 U	10,000 U	10,000 U	5500 U	6300 U	4900 UJ	6800 U
Hexachloroethane			200 U	2000 U	2000 U	2000 U	2000 U	1100 U	1300 U	980 U	1400 U
Isophorone			100 U	1000 U	1000 U	**20,000**	1000 U	550 U	630 U	490 U	680 U
1-Methylnaphthalene			20 U	200 U	200 U	200 U	200 U	110 U	130 U	98 U	140 U
2-Methylphenol	63	63	60 U	600 U	600 U	600 U	600 U	330 U	380 U	290 U	410 U
4-Methylphenol	670	670	100 U	1000 U	1000 U	1000 U	1000 U	550 U	630 U	490 U	680 U
2-Nitroaniline			100 U	1000 U	1000 U	1000 U	1000 U	550 U	630 U	490 U	680 U
3-Nitroaniline			400 U	4000 U	4000 U	4000 U	4000 U	2200 U	2500 U	2000 UJ	2700 U
4-Nitroaniline			400 U	4000 U	4000 U	4000 U	4000 U	2200 U	2500 U	2000 UJ	2700 U
Nitrobenzene			100 U	1000 U	1000 U	1000 U	1000 U	550 U	630 U	490 U	680 U
2-Nitrophenol			100 U	1000 U	1000 U	1000 U	1000 U	550 U	630 U	490 U	680 U
4-Nitrophenol			1000 U	10,000 U	10,000 U	10,000 U	10,000 U	5500 U	6300 U	4900 UJ	6800 U
N-Nitroso-Di-N-Propylamine			100 U	1000 U	1000 U	**3000**	1000 U	550 U	630 U	490 U	680 U
N-Nitrosodiphenylamine	28	40	60 U	600 U	600 U	600 U	600 U	330 U	380 U	290 U	410 U
Di-n-Octyl phthalate	6200	6200	400 U	4000 U	4000 U	4000 U	4000 U	2200 U	2500 U	2000 UJ	2700 U
Pentachlorophenol	360	690	200 U	2000 U	2000 U	2000 U	2000 U	1100 U	1300 U	980 U	1400 U
Phenol	420	1200	100 U	1000 U	1000 U	**2100**	1000 U	550 U	630 U	490 U	680 U
1,2,4-Trichlorobenzene	31	51	100 U	1000 U	1000 U	1000 U	1000 U	550 U	630 U	490 U	680 U
2,4,5-Trichlorophenol			100 U	1000 U	1000 U	1000 U	1000 U	550 U	630 U	490 U	680 U
2,4,6-Trichlorophenol			100 U	1000 U	1000 U	1000 U	1000 U	550 U	630 U	490 U	680 U

TABLE 7
14-02/14-03 BUILDING AREA
BOEING ISAACSON-THOMPSON
REMEDIAL INVESTIGATION

	Dry Weight Equivalent to SMS Criteria (a)		2012 Source Material								
			IT-PAINT-01-120410	IT-PAINT-02	IT-PAINT-03	IT-PAINT-04	IT-PAINT-05	IT-SURFACE-01	IT-SURFACE-02	IT-SURFACE-03	IT-SURFACE-13
			6612539	6612540	6612541	6612542	6612543	6607139	6607140	6607141	6607154
			1301439	1301439	1301439	1301439	1301439	1300346	1300346	1300346	1300346
	SQS/LAET (b)	CSL/2LAET (c)	04/10/2012	04/10/2012	04/10/2012	04/10/2012	04/10/2012	04/03/2012	04/03/2012	04/03/2012	04/04/2012
PAHs (µg/kg)											
Method SW8270D-SIM											
Acenaphthene	500	500	400 U	400 U	200 U	400 U	200 U	44 U	100 UJ	**71** J1	**240**
Acenaphthylene	1300	1300	200 U	200 U	100 U	200 U	100 U	**59** J1	**57** J, J1	**71** J1	**65** J1
Anthracene	960	960	200 U	200 U	100 U	200 U	100 U	**120**	**130** J, J1	**160**	**350**
Benzo(a)anthracene	1300	1600	400 U	400 U	200 U	400 U	200 U	**380**	**200** J, J1	**520**	**750**
Benzo(a)pyrene	1600	1600	400 U	400 U	200 U	400 U	200 U	**520**	**260** J	**740**	**780**
Benzo(b)fluoranthene			400 U	400 U	200 U	400 U	200 U	**1300**	**990** J	**1800**	**1600**
Benzo(g,h,i)perylene	670	720	400 U	400 U	200 U	400 U	200 U	**290**	**170** J, J1	**370**	**260**
Benzo(k)fluoranthene			400 U	400 U	200 U	400 U	200 U	**460**	**860** J	**650**	**650**
Total Benzofluoranthenes (d, e)	3200	3600	NA	NA	NA	NA	NA	NA	NA	NA	NA
Chrysene	1400	2800	200 U	200 U	100 U	200 U	100 U	**1000**	**1200** J	**1500**	**1100**
Dibenz(a,h)anthracene	230	230	400 U	400 U	200 U	400 U	200 U	**76** J1	100 UJ	**99** J1	**77** J1
Dibenzofuran			400 U	400 U	200 U	400 U	200 U	**59** J1	**200** J, J1	**100**	**170**
Fluoranthene	1700	2500	400 U	400 U	**300** J1	400 U	200 U	**1500**	**2500** J	**2400**	**2700**
Fluorene	540	540	400 U	400 U	200 U	400 U	200 U	**54** J1	**130** J, J1	**96** J1	**270**
Indeno(1,2,3-cd)pyrene	600	690	400 U	400 U	200 U	400 U	200 U	**280**	**170** J, J1	**380**	**250**
2-Methylnaphthalene	670	670	400 U	400 U	200 U	400 U	200 U	**53** J1	**110** J, J1	**58** J1	**110** J1
Naphthalene	2100	2100	**520** J1	**470** J1	200 U	**610** J1	200 U	**120**	**220** J, J1	**140**	**190**
Total Naphthalenes			**520** J	**470** J	NA	**610** J	NA	**173** J	**330** J	**198** J	**300** J
Phenanthrene	1500	1500	**890** J1	**890** J1	**290** J1	**950** J1	200 U	**820**	**2000** J	**1300**	**2100**
Pyrene	2600	3300	400 U	400 U	**220** J1	400 U	200 U	**1000**	**1300** J	**1500**	**2000**
cPAH TEQ			ND	ND	ND	ND	ND	**780** J	**494** J	**1100**	**1124** J
PCBs (µg/kg)											
Method SW8082											
Aroclor 1016			72 U	72 U	72 U	72 U	360 U	9.5 U	11 U	8.5 U	12 U
Aroclor 1221			92 U	92 U	92 U	92 U	460 U	12 U	14 U	11 U	15 U
Aroclor 1232			160 U	160 U	160 U	160 U	800 U	21 U	25 U	19 U	26 U
Aroclor 1242			66 U	66 U	66 U	66 U	330 U	8.7 U	10 U	7.8 U	11 U
Aroclor 1248			66 U	**470**	**430**	66 U	330 U	8.7 U	10 U	7.8 U	11 U
Aroclor 1254			**120** J1	**440**	**190** J1	**1400**	**11,000**	**130** J	10 U	7.8 U	**50** J, J1
Aroclor 1260			98 U	**200** J1	98 U	98 U	490 U	**110** J	**51** J1	**130** J	16 U
Total PCBs (d)	130	1000	**120** J	**1110**	**620** J	**1400**	**11,000**	**240** J	**51** J	**130** J	**50** J
TOTAL METALS (mg/kg)											
Methods 6010B/6020											
Antimony			**0.263**	**5.54**	**58.8**	**0.900**	**0.373**	**6.55** J	**8.88**	**2.77**	**2.49**
Arsenic	57	93	**4.49** J1	**20.5** J1	**20.5**	**0.875** J1	**4.54**	**9.30**	**41.7**	**14.9**	**14.8**
Barium			**2160**	**6030**	**310**	**250**	**2950**	**143** J	**204**	**144**	**209**
Beryllium			**0.137** J1	**0.0210** J1	0.0264 U	**0.0186** J1	**0.0570** J1	**0.180** J1	**0.257** J1	**0.308** J1	**0.326** J1
Cadmium	5.1	6.7	**2.00**	**3.31**	**7.94**	**147**	**4.51**	**10.9**	**46.7**	**13.0**	**6.66**
Chromium	260	270	**4200**	**17,800**	**1580**	**76.6**	**16.6**	**161**	**154**	**199**	**112**
Copper	390	390	**31.5**	**42.3**	**231**	**12.4**	**30.9**	**156**	**128**	**197**	**109**
Lead	450	530	**16,300**	**71,300**	**14,600**	**1740**	**395**	**371** J	**235**	**288**	**65.6**
Nickel			**18.2**	**38.6**	**60.1**	**8.71**	**7.47**	**87.6**	**95.8**	**97.7**	**59.1**
Selenium			3.27 U	**12.6**	**9.33** J1	**10.4**	**1.20** J1	4.44 U	1.01 U	3.98 U	1.11 U
Silver	6.1	6.1	**0.769** J1	**2.56**	**5.61**	0.160 U	**0.344** J1	**8.01** J	**1.03**	**1.27**	**0.869**
Zinc	410	960	**1480**	**242**	**81,100**	**2110**	**8140**	**4270**	**1830**	**2030**	**1030**
Method SW7199											
Chromium VI			**386**	**9380**	**118**	**0.47** J1	**0.49** J1	0.26 U	0.31 U	0.25 U	**2.9** J
Method SW7471A											
Mercury	0.41	0.59	**0.159**	**0.100**	**0.0300** J1	**0.115**	**37.0**	**0.107** J1	**0.0720** J1	**0.137**	**0.144** J1

TABLE 7
14-02/14-03 BUILDING AREA
BOEING ISAACSON-THOMPSON
REMEDIAL INVESTIGATION

Indicates concentration exceeds SQS but less than the CSL or the dry weight equivalent values [Lower Apparent Effect Threshold (LAET) and and 2LAET, respectively]

Indicates concentration exceeds the SQS and CSL or dry weight equivalent criteria.

Bold = Detected compound.

(a) Dry weight equivalent criteria are based on the Puget Sound Apparent Effect Threshold Values (Barrick et al. 1988)

(b) SMS Sediment Quality Standard /Lower Apparent Effects Threshold

(c) SMS Cleanup Screening Level / Second Lower Apparent Effects Threshold

(d) Where chemical criteria in this table represent the sum of individual compounds or isomers, the following methods shall be applied:

(i) Where chemical analyses identify an undetected value for every individual compound/isomer, then the single highest detection limit shall represent the sum of the respective compound/isomers.

(ii) Where chemical analyses detect one or more individual compounds/isomers, only the detected concentrations will be added to represent the group sum.

(e) The total benzofluoranthenes criterion represents the sum of the concentrations of the "B," "J," and "K" isomers.

J = Indicates the analyte was positively identified; the associated numerical value is the approximate concentration of the analyte in the sample.

J1 = Laboratory flag indicating the analyte was positively identified; the associated concentration is approximate and less than the reporting limit, but equal to or greater than the detection limit.

U = Indicates the compound was not detected at or above the reporting limit.

TABLE 8
ISAACSON EAST
BOEING ISAACSON-THOMPSON
REMEDIAL INVESTIGATION

	Dry Weight Equivalent to SMS Criteria (a)		2011 Storm Drain Solids				2012 Source Material				
			IT-CB10	IT-CB11	IT-CB12	IT-VTVE	IT-CJM-08	IT-SURFACE-05	IT-SURFACE-06	IT-SURFACE-07	IT-SURFACE-08
			TL84F	TL84E	TL84D	TL84C	6612538	6607143	6607144	6607145	6607146
			TL84	TL84	TL84	TL84	1301439	1300346	1300346	1300346	1300346
	SQS/LAET (b)	CSL/2LAET (c)	09/12/2011	09/12/2011	09/12/2011	09/12/2011	04/10/2012	04/03/2012	04/03/2012	04/03/2012	04/03/2012
SEMIVOLATILES (µg/kg)											
Method SW8270D											
Benzoic Acid	650	650	5600 U	5700 U	**1400** J1	**1200** J1	25,000 U	6600 U	5100 U	5000 U	6600 U
Benzyl Alcohol	57	73	280 U	280 U	**240**	**210** J1	5000 U	1300 U	1000 U	1000 U	1300 U
4-Bromophenyl-phenylether			280 U	280 U	220 U	240 U	2500 U	660 U	510 U	500 U	660 U
Butylbenzylphthalate	63	900	**350** J	280 U	**470** J	**370** J	10,000 U	2600 U	2100 U	2000 U	2700 U
Di-n-Butylphthalate	1400	5100	280 U	280 U	**430**	240 U	10,000 U	2600 U	2100 U	2000 U	2700 U
Carbazole			**450**	**1000**	**210** J1	**200** J1	2500 U	660 U	510 U	500 U	660 U
4-Chloro-3-methylphenol			1400 U	1400 U	1100 U	1200 U	2500 U	660 U	510 U	500 U	660 U
4-Chloroaniline			3800 U	3800 U	3000 U	3200 U	2500 U	660 U	510 U	500 U	660 U
bis(2-Chloroethoxy) Methane			280 U	280 U	220 U	240 U	2500 U	660 U	510 U	500 U	660 U
Bis-(2-Chloroethyl) Ether			280 U	280 U	220 U	240 U	2500 U	660 U	510 U	500 U	660 U
2-Chloronaphthalene			280 U	280 U	220 U	240 U	1100 U	280 U	220 U	210 U	280 U
2-Chlorophenol			280 U	280 U	220 U	240 U	2500 U	660 U	510 U	500 U	660 U
4-Chlorophenyl-phenylether			280 U	280 U	220 U	240 U	2500 U	660 U	510 U	500 U	660 U
2,2'-Oxybis(1-Chloropropane)			280 U	280 U	220 U	240 U	2500 U	660 U	510 U	500 U	660 U
1,2-Dichlorobenzene	35	50	280 U	280 U	220 U	240 U	2500 U	660 U	510 U	500 U	660 U
1,3-Dichlorobenzene			280 U	280 U	220 U	240 U	2500 U	660 U	510 U	500 U	660 U
1,4-Dichlorobenzene	110	110	280 U	280 U	220 U	240 U	2500 U	660 U	510 U	500 U	660 U
3,3'-Dichlorobenzidine			2100 U	2100 U	1600 U	1800 U	15,000 U	4000 U	3100 U	3000 U	4000 U
2,4-Dichlorophenol			2800 U	2800 U	2200 U	2400 U	2500 U	660 U	510 U	500 U	660 U
Diethylphthalate	200	1200	700 U	710 U	550 U	590 U	10,000 U	2600 U	2100 U	2000 U	2700 U
2,4-Dimethylphenol	29	29	560 U	570 U	440 U	480 U	1500 U	400 U	310 U	300 U	400 U
Dimethylphthalate	71	160	280 U	280 U	220 U	240 U	10,000 U	2600 U	2100 U	2000 U	2700 U
4,6-Dinitro-2-Methylphenol			2800 U	2800 U	2200 U	2400 U	25,000 U	6600 U	5100 U	5000 U	6600 U
2,4-Dinitrophenol			12000 U	12000 U	9300 U	10000 U	45,000 U	12,000 U	9200 U	9000 U	12,000 U
2,4-Dinitrotoluene			1400 U	1400 U	1100 U	1200 U	10,000 U	2600 U	2100 U	2000 U	2700 U
2,6-Dinitrotoluene			1400 U	1400 U	1100 U	1200 U	2500 U	660 U	510 U	500 U	660 U
bis(2-Ethylhexyl)phthalate	1300	3100	**720**	**880**	**3000**	**3300**	**24,000** J1	2600 U	2100 U	2000 U	**6600** J1
Hexachlorobenzene	22	70	280 U	280 U	220 U	240 U	500 U	130 U	100 U	100 U	130 U
Hexachlorobutadiene	11	120	1400 U	1400 U	1100 U	1200 U	1500 U	400 U	310 U	300 U	400 U
Hexachlorocyclopentadiene			5600 U	5700 U	4400 U	4800 U	25,000 U	6600 U	5100 U	5000 U	6600 U
Hexachloroethane			280 U	280 U	220 U	240 U	5000 U	1300 U	1000 U	1000 U	1300 U
Isophorone			280 U	280 U	220 U	240 U	2500 U	660 U	510 U	500 U	660 U
1-Methylnaphthalene			280 U	**440**	220 U	240 U	500 U	130 U	100 U	100 U	130 U
2-Methylphenol	63	63	280 U	280 U	220 U	240 U	1500 U	400 U	310 U	300 U	400 U
4-Methylphenol	670	670	560 U	570 U	**760**	**590**	2500 U	660 U	510 U	500 U	660 U
2-Nitroaniline			1400 U	1400 U	1100 U	1200 U	2500 U	660 U	510 U	500 U	660 U
3-Nitroaniline			1400 U	1400 U	1100 U	1200 U	10,000 U	2600 U	2100 U	2000 U	2700 U
4-Nitroaniline			1400 U	1400 U	1100 U	1200 U	10,000 U	2600 U	2100 U	2000 U	2700 U
Nitrobenzene			280 U	280 U	220 U	240 U	2500 U	660 U	510 U	500 U	660 U
2-Nitrophenol			1400 U	1400 U	1100 U	1200 U	2500 U	660 U	510 U	500 U	660 U
4-Nitrophenol			1400 U	1400 U	1100 U	1200 U	25,000 U	6600 U	5100 U	5000 U	6600 U
N-Nitroso-Di-N-Propylamine			280 U	280 U	220 U	240 U	2500 U	660 U	510 U	500 U	660 U
N-Nitrosodiphenylamine	28	40	280 U	280 U	220 U	240 U	1500 U	400 U	310 U	300 U	400 U
Di-n-Octyl phthalate	6200	6200	280 U	280 U	220 U	**130** J1	10,000 U	2600 U	2100 U	2000 U	2700 U
Pentachlorophenol	360	690	2800 U	2800 U	2200 U	2400 U	5000 U	1300 U	1000 U	1000 U	1300 U
Phenol	420	1200	280 U	280 U	**300**	**260**	2500 U	660 U	510 U	500 U	660 U
1,2,4-Trichlorobenzene	31	51	280 U	280 U	220 U	240 U	2500 U	660 U	510 U	500 U	660 U
2,4,5-Trichlorophenol			1400 U	1400 U	1100 U	1200 U	2500 U	660 U	510 U	500 U	660 U
2,4,6-Trichlorophenol			1400 U	1400 U	1100 U	1200 U	2500 U	660 U	510 U	500 U	660 U

TABLE 8
ISAACSON EAST
BOEING ISAACSON-THOMPSON
REMEDIAL INVESTIGATION

	Dry Weight Equivalent to SMS Criteria (a)		2011 Storm Drain Solids				2012 Source Material				
			IT-CB10	IT-CB11	IT-CB12	IT-VTVE	IT-CJM-08	IT-SURFACE-05	IT-SURFACE-06	IT-SURFACE-07	IT-SURFACE-08
			TL84F	TL84E	TL84D	TL84C	6612538	6607143	6607144	6607145	6607146
			TL84	TL84	TL84	TL84	1301439	1300346	1300346	1300346	1300346
	SQS/LAET (b)	CSL/2LAET (c)	09/12/2011	09/12/2011	09/12/2011	09/12/2011	04/10/2012	04/03/2012	04/03/2012	04/03/2012	04/03/2012
PAHs (µg/kg)											
Method SW8270D-SIM											
Acenaphthene	500	500	**130** J1	**110**	**140**	**220**	200 U	**58** J1	41 U	16 U	21 U
Acenaphthylene	1300	1300	140 U	**25** J1	**58**	**94**	100 U	27 U	20 U	8.0 U	11 U
Anthracene	960	960	**120** J1	**130**	**120**	**120**	**300** J, J1	**120** J1	**24** J1	**9.7** J1	**19** J1
Benzo(a)anthracene	1300	1600	**380**	**730**	**430**	**540**	**8200**	**430**	**100** J1	**36** J1	**73**
Benzo(a)pyrene	1600	1600	**340**	**800**	**550**	**660**	**8000**	**570**	**140**	**53**	**110**
Benzo(b)fluoranthene			NA	NA	NA	NA	**22,000**	**1300**	**250**	**140**	**270**
Benzo(g,h,i)perylene	670	720	**480**	**640**	**560**	**760**	**1500**	**270**	**110**	**35** J1	**46** J1
Benzo(k)fluoranthene			NA	NA	NA	NA	**6700**	**440**	**81** J1	**43**	**120**
Total Benzofluoranthenes (d, e)	3200	3600	**780**	**1700**	**1400**	**1600**	NA	NA	NA	NA	NA
Chrysene	1400	2800	**740**	**1200**	**1100**	**1400**	**13,000**	**910**	**240**	**110**	**220**
Dibenz(a,h)anthracene	230	230	**77** J1	**140**	**120**	**140**	**780**	**70** J1	41 U	16 U	21 U
Dibenzofuran			**120** J1	**69**	**160**	**110**	200 U	**93** J1	41 U	16 U	**30** J1
Fluoranthene	1700	2500	**1200**	**2800**	**1900**	**2100**	**10,000**	**1600**	**260**	**130**	**290**
Fluorene	540	540	**140**	**120**	**190**	**150**	200 U	**84** J1	41 U	16 U	21 U
Indeno(1,2,3-cd)pyrene	600	690	**300**	**550**	**460**	**560**	**1800**	**260**	**85** J1	**25** J1	**37** J1
2-Methylnaphthalene	670	670	**100** J1	**33** J1	**170**	**230**	200 U	**79** J1	41 U	**21** J1	**37** J1
Naphthalene	2100	2100	**220**	**90**	**190**	**180**	200 U	**170**	**72** J1	**34** J1	**79**
Total Naphthalenes			**320** J	**123** J1	**360**	**410**	NA	**249** J	**72** J	**55** J	**116** J
Phenanthrene	1500	1500	**940**	**2000**	**1500**	**1400**	**870**	**950**	**150**	**80**	**200**
Pyrene	2600	3300	**1200**	**2000**	**1300**	**1600**	**18,000** J	**1100**	**230**	**95**	**210**
cPAH TEQ			**501** J	**1124**	**802**	**958**	**12,078**	**829** J	**194** J	**79** J	**162** J
PCBs (µg/kg)											
Method SW8082											
Aroclor 1016			19 U	18 U	20 U	39 U	7200 U	57 U	8.8 U	8.6 U	11 U
Aroclor 1221			19 U	18 U	20 U	39 U	9200 U	73 U	11 U	11 U	15 U
Aroclor 1232			19 U	18 U	20 U	39 U	16,000 U	130 U	20 U	19 U	25 U
Aroclor 1242			19 U	18 U	20 U	39 U	6600 U	52 U	8.1 U	7.9 U	10 U
Aroclor 1248			56 U	230 U	250 U	190 U	6600 U	52 U	8.1 U	7.9 U	10 U
Aroclor 1254			**150**	**600**	**720**	**570**	**79,000** J	**570**	**38** J, J1	**130**	**160**
Aroclor 1260			**140** P	**190**	**210**	**200**	9800 U	78 U	**73** J	**82**	**100**
Total PCBs (d)	130	1000	**290** P	**790**	**930**	**770**	**79,000** J	**570**	**111** J	**212**	**260**
TOTAL METALS (mg/kg)											
Methods 6010B/6020											
Antimony			0.2 U	0.2 U	**0.4**	**0.5**	NA	**2.73**	**0.798**	0.376 U	**1.15**
Arsenic	57	93	**33.9**	**17.2**	**32.4**	**38.8**	NA	**17.4**	**16.8**	**7.12**	**6.92**
Barium			**65.4**	**66.4**	**95**	**74**	NA	**164**	**84.9**	**86.5**	**84.8**
Beryllium			0.2 U	**0.3**	0.4 U	0.4 U	NA	**0.242** J1	**0.241** J1	**0.337** J1	**0.217** J1
Cadmium	5.1	6.7	**0.8**	**1.3**	**2.5**	**2.4**	NA	**1.11**	**1.08**	**0.639**	**2.33**
Chromium	260	270	**92.3**	**152**	**373**	**290**	NA	**338**	**204**	**52.3**	**1570**
Copper	390	390	**73.8**	**108**	**251**	**245**	NA	**132**	**100**	**48.7**	**306**
Lead	450	530	**59.8**	**201**	**437**	**378**	NA	**263**	**72.5**	**12.8**	**140**
Nickel			**66.4**	**109**	**271**	**236**	NA	**180**	**129**	**38.8**	**856**
Selenium			0.6 U	0.5 U	**1**	**1**	NA	1.05 U	4.18 U	0.797 U	5.35 U
Silver	6.1	6.1	**0.2**	**0.2**	**0.5**	**0.6**	NA	**0.681** J1	**0.691**	**0.437** J1	**1.52**
Zinc	410	960	**278**	**640**	**1100**	**990**	NA	**544**	**568**	**170**	**971**
Method SW7199											
Chromium VI			0.482 U	0.408 U	0.894 U	0.859 U	NA	**4.2**	**0.47** J1	**1.5**	0.31 U
Method SW7471A											
Mercury	0.41	0.59	**0.07**	**0.11**	**0.15**	**0.19**	NA	**0.0586** J1	**0.0174** J1	**0.0677** J1	**0.0273** J1

TABLE 8
ISAACSON EAST
BOEING ISAACSON-THOMPSON
REMEDIAL INVESTIGATION

Indicates concentration exceeds SQS but less than the CSL or the dry weight equivalent values [Lower Apparent Effect Threshold (LAET) and and 2LAET, respectively]

Indicates concentration exceeds the SQS and CSL or dry weight equivalent criteria.

(a) Dry weight equivalent criteria are based on the Puget Sound Apparent Effect Threshold Values (Barrick et al. 1988)

(b) SMS Sediment Quality Standard /Lower Apparent Effects Threshold

(c) SMS Cleanup Screening Level / Second Lower Apparent Effects Threshold

(d) Where chemical criteria in this table represent the sum of individual compounds or isomers, the following methods shall be applied:

(i) Where chemical analyses identify an undetected value for every individual compound/isomer, then the single highest detection limit shall represent the sum of the respective compound/isomers.

(ii) Where chemical analyses detect one or more individual compounds/isomers, only the detected concentrations will be added to represent the group sum.

(e) The total benzofluoranthenes criterion represents the sum of the concentrations of the "B," "J," and "K" isomers.

J = Indicates the analyte was positively identified; the associated numerical value is the approximate concentration of the analyte in the sample.

J1 = Laboratory flag indicating the analyte was positively identified; the associated concentration is approximate and less than the reporting limit, but equal to or greater than the detection limit.

P = The analyte was detected on both chromatographic columns but the quantified values differ by 40% RPD with no obvious chromatographic interference. The higher of the two values is reported by the laboratory.

U = Indicates the compound was not detected at or above the reporting limit.

TABLE 9
ISAACSON WEST
BOEING ISAACSON-THOMPSON
REMEDIAL INVESTIGATION

	Dry Weight Equivalent to SMS Criteria (a)		2011 Storm Drain Solids			2012 Source Material				
			IT-CB34	IT-CB35	IT-VTVW	IT-CJM-07	IT-SURFACE-09	IT-SURFACE-10	IT-SURFACE-11	IT-SURFACE-12
			TL84A	TL84B	TL29E/TO31A	6612537	6607147	6607148	6607149	6607150
			TL84	TL84	TL29/TO31	1301439	1300346	1300346	1300346	1300346
	SQS/LAET (b)	CSL/2LAET (c)	09/12/2011	09/12/2011	09/07/2011	04/10/2012	04/03/2012	04/03/2012	04/03/2012	04/03/2012
SEMIVOLATILES (µg/kg)										
Method SW8270D										
Benzoic Acid	650	650	1900 U	**1600** J	8200 UJ	25,000 UJ	1400 U	2400 U	11,000 U	7500 U
Benzyl Alcohol	57	73	94 U	**140** J	410 U	5000 U	280 U	490 U	2300 U	1500 U
4-Bromophenyl-phenylether			94 U	180 U	410 U	2500 U	140 U	240 U	1100 U	750 U
Butylbenzylphthalate	63	900	94 U	**310** J	**370** J	10,000 U	560 U	980 U	4600 U	3000 U
Di-n-Butylphthalate	1400	5100	94 U	180 U	**430**	10,000 UJ	560 U	980 U	4600 U	3000 U
Carbazole			94 U	**130** J	410 U	2500 U	140 U	240 U	1100 U	750 U
4-Chloro-3-methylphenol			470 U	910 U	2000 U	2500 U	140 U	240 U	1100 U	750 U
4-Chloroaniline			1300 U	2500 U	5500 U	2500 U	140 U	240 U	1100 U	750 U
bis(2-Chloroethoxy) Methane			94 U	180 U	410 U	2500 U	140 U	240 U	1100 U	750 U
Bis-(2-Chloroethyl) Ether			94 U	180 U	410 U	2500 U	140 U	240 U	1100 U	750 U
2-Chloronaphthalene			94 U	180 U	410 U	1100 U	59 U	100 U	480 U	310 U
2-Chlorophenol			94 U	180 U	410 U	2500 U	140 U	240 U	1100 U	750 U
4-Chlorophenyl-phenylether			94 U	180 U	410 UJ	2500 U	140 U	240 U	1100 U	750 U
2,2'-Oxybis(1-Chloropropane)			94 U	180 U	410 U	2500 U	140 U	240 U	1100 U	750 U
1,2-Dichlorobenzene	35	50	94 U	180 U	410 U	2500 U	140 U	240 U	1100 U	750 U
1,3-Dichlorobenzene			94 U	180 U	410 U	2500 U	140 U	240 U	1100 U	750 U
1,4-Dichlorobenzene	110	110	94 U	180 U	410 U	2500 U	140 U	240 U	1100 U	750 U
3,3'-Dichlorobenzidine			700 U	1400 U	3100 U	15,000 UJ	840 U	1500 U	6800 U	4500 U
2,4-Dichlorophenol			940 U	1800 U	4100 U	2500 U	140 U	240 U	1100 U	750 U
Diethylphthalate	200	1200	230 U	460 U	1000 U	10,000 UJ	560 U	980 U	4600 U	3000 U
2,4-Dimethylphenol	29	29	190 U	360 U	820 U	1500 U	84 U	150 U	680 U	450 U
Dimethylphthalate	71	160	94 U	180 U	410 U	10,000 UJ	560 U	980 U	4600 U	3000 U
4,6-Dinitro-2-Methylphenol			940 U	1800 UJ	4100 U	25,000 UJ	1400 U	2400 U	11,000 U	7500 U
2,4-Dinitrophenol			4000 U	7800 U	17000 U	45,000 UJ	2500 U	4400 U	20,000 U	13,000 U
2,4-Dinitrotoluene			470 U	910 U	2000 U	10,000 UJ	560 U	980 U	4600 U	3000 U
2,6-Dinitrotoluene			470 U	910 U	2000 U	2500 U	140 U	240 U	1100 U	750 U
bis(2-Ethylhexyl)phthalate	1300	3100	**210**	**3000**	**4400**	10,000 U	**580** J1	**2900**	4600 U	3000 U
Hexachlorobenzene	22	70	94 U	180 U	410 U	500 U	28 U	49 U	230 U	150 U
Hexachlorobutadiene	11	120	470 U	910 U	2000 U	1500 U	84 U	150 U	680 U	450 U
Hexachlorocyclopentadiene			1900 U	3600 U	8200 U	25,000 UJ	1400 U	2400 U	11,000 U	7500 U
Hexachloroethane			94 U	180 U	410 U	5000 U	280 U	490 U	2300 U	1500 U
Isophorone			94 U	180 U	410 U	2500 U	140 U	240 U	1100 U	750 U
1-Methylnaphthalene			94 U	180 U	410 U	500 U	28 U	49 U	230 U	150 U
2-Methylphenol	63	63	94 U	180 U	410 U	1500 U	84 U	150 U	680 U	450 U
4-Methylphenol	670	670	190 U	**410**	**370** J	2500 U	140 U	240 U	1100 U	750 U
2-Nitroaniline			470 U	910 U	2000 U	2500 U	140 U	240 U	1100 U	750 U
3-Nitroaniline			470 U	910 U	2000 U	10,000 UJ	560 U	980 U	4600 U	3000 U
4-Nitroaniline			470 U	910 U	2000 U	10,000 UJ	560 U	980 U	4600 U	3000 U
Nitrobenzene			94 U	180 U	410 U	2500 U	140 U	240 U	1100 U	750 U
2-Nitrophenol			470 U	910 U	2000 U	2500 U	140 U	240 U	1100 U	750 U
4-Nitrophenol			470 U	910 U	2000 U	25,000 UJ	1400 U	2400 U	11,000 U	7500 U
N-Nitroso-Di-N-Propylamine			94 U	180 U	410 U	2500 U	140 U	240 U	1100 U	750 U
N-Nitrosodiphenylamine	28	40	94 U	180 U	410 U	1500 U	84 U	150 U	680 U	450 U
Di-n-Octyl phthalate	6200	6200	94 U	**130** J	410 U	10,000 U	560 U	980 U	4600 U	3000 U
Pentachlorophenol	360	690	940 U	1800 U	4100 U	5000 U	280 U	490 U	2300 U	1500 U
Phenol	420	1200	94 U	**120** J	**390** J	2500 U	140 U	**1300**	1100 U	750 U
1,2,4-Trichlorobenzene	31	51	94 U	180 U	410 U	2500 U	140 U	240 U	1100 U	750 U
2,4,5-Trichlorophenol			470 U	910 U	2000 U	2500 U	140 U	240 U	1100 U	750 U
2,4,6-Trichlorophenol			470 U	910 U	2000 U	2500 U	140 U	240 U	1100 U	750 U

TABLE 9
ISAACSON WEST
BOEING ISAACSON-THOMPSON
REMEDIAL INVESTIGATION

	Dry Weight Equivalent to SMS Criteria (a)		2011 Storm Drain Solids			2012 Source Material				
			IT-CB34	IT-CB35	IT-VTVW	IT-CJM-07	IT-SURFACE-09	IT-SURFACE-10	IT-SURFACE-11	IT-SURFACE-12
			TL84A	TL84B	TL29E/TO31A	6612537	6607147	6607148	6607149	6607150
			TL84	TL84	TL29/TO31	1301439	1300346	1300346	1300346	1300346
	SQS/LAET (b)	CSL/2LAET (c)	09/12/2011	09/12/2011	09/07/2011	04/10/2012	04/03/2012	04/03/2012	04/03/2012	04/03/2012
PAHs (µg/kg)										
Method SW8270D-SIM										
Acenaphthene	500	500	46 U	47 U	**110**	200 U	**23** J1	**49** J1	37 U	24 U
Acenaphthylene	1300	1300	46 U	47 U	**40** J	100 U	**15** J1	**25** J1	18 U	12 U
Anthracene	960	960	46 U	47 U	**83**	100 U	**26** J1	**77** J1	**72** J1	**20** J1
Benzo(a)anthracene	1300	1600	46 U	**40** J	**250**	**610**	**86**	**150**	**270**	**68**
Benzo(a)pyrene	1600	1600	46 U	**75**	**260**	**1800**	**130**	**190**	**300**	**110**
Benzo(b)fluoranthene			NA	NA	NA	**1000**	**360**	**440**	**610**	**270**
Benzo(g,h,i)perylene	670	720	**67**	**120**	**280**	**690**	**66**	**78** J1	**160**	**65**
Benzo(k)fluoranthene			NA	NA	NA	**210** J1	**120**	**170**	**260**	**110**
Total Benzofluoranthenes (d, e)	3200	3600	46 U	**150**	**590**	NA	NA	NA	NA	NA
Chrysene	1400	2800	**100**	**250**	**670**	**1500**	**250**	**310**	**470**	**240**
Dibenz(a,h)anthracene	230	230	46 U	**52**	**58** J	**480** J1	22 U	38 U	**39** J1	24 U
Dibenzofuran			46 U	47 U	**98**	200 UJ	**53** J1	**84** J1	**46** J1	**26** J1
Fluoranthene	1700	2500	**29** J	**170**	**890**	**520** J	**420**	**600**	**920**	**340**
Fluorene	540	540	46 U	47 U	**140**	200 U	22 U	**85** J1	**42** J1	24 U
Indeno(1,2,3-cd)pyrene	600	690	46 U	**56**	**190**	**430** J1	**63**	**72** J1	**130**	**54** J1
2-Methylnaphthalene	670	670	46 U	**34** J	**160**	200 U	**61**	**90** J1	**41** J1	**31** J1
Naphthalene	2100	2100	46 U	47 U	**140**	200 U	**130**	**170**	**100**	**63**
Total Naphthalenes			NA	**34** J	**300**	NA	**191**	**260** J	**141** J	**94** J
Phenanthrene	1500	1500	46 U	**140**	**780**	200 U	**300**	**530**	**550**	**200**
Pyrene	2600	3300	**26** J	**170**	**660**	**7000** J	**320**	**410**	**620**	**230**
cPAH TEQ			**1.0**	**107** J	**376** J	**2088** J	**195**	**276** J	**436** J	**163** J
PCBs (µg/kg)										
Method SW8082										
Aroclor 1016			19 U	19 U	19 U	72 U	12 U	21 U	19 U	13 U
Aroclor 1221			19 U	19 U	19 U	92 U	15 U	27 U	25 U	17 U
Aroclor 1232			19 U	19 U	19 U	160 U	27 U	46 U	43 U	29 U
Aroclor 1242			19 U	19 U	19 U	66 U	11 U	19 U	18 U	12 U
Aroclor 1248			19 U	**23**	81 U	66 U	11 U	19 U	18 U	12 U
Aroclor 1254			**12** J	**42**	**130**	**620**	**42** J, J1	**540** J	**88** J, J1	**34** J, J1
Aroclor 1260			**14** J	**42**	**100**	98 U	**60** J	28 U	**53** J, J1	**32** J, J1
Total PCBs (d)	130	1000	**26** J	**107**	**230**	**620**	**102** J	**540** J	**141** J	**66** J
TOTAL METALS (mg/kg)										
Methods 6010B/6020										
Antimony			0.2 U	0.3 UJ	0.4 U	NA	**3.18**	**5.96**	**1.33**	**1.76**
Arsenic	57	93	**5.7**	**15.2** J	**38.3**	NA	**5.83** J1	**33.2**	**8.79**	**40.4**
Barium			**44.5**	**347** J	**113**	NA	**102**	**184**	**112**	**183**
Beryllium			0.2 U	0.3 U	0.4 U	NA	**0.179** J1	**0.322** J1	**0.145** J1	**0.290** J1
Cadmium	5.1	6.7	**2.1**	**7.3** J	**23.7**	NA	**6.81**	**21.1**	**2.28**	**7.61**
Chromium	260	270	**59**	**207** J	**821**	NA	**11,100**	**647**	**243**	**395**
Copper	390	390	**30.5**	**80.6** J	**205**	NA	**598**	**368**	**83.5**	**130**
Lead	450	530	**13.2**	**50.1** J	**182**	NA	**317**	**900**	**90.7**	**101**
Nickel			**19.9**	**79.6** J	**225**	NA	**1720**	**242**	**93.4**	**124**
Selenium			0.6 U	**0.9**	**4**	NA	5.58 U	9.78 U	1.86 U	1.20 U
Silver	6.1	6.1	0.2 U	0.3 U	**0.6**	NA	**4.67**	**3.34**	**0.655** J1	**1.06**
Zinc	410	960	**132**	**384** J	**830**	NA	**2670**	**3260**	**1690**	**564**
Method SW7199										
Chromium VI			0.488 U	0.531 UJ	0.875 U	NA	**0.88** J1	0.61 U	0.57 U	**2.5**
Method SW7471A										
Mercury	0.41	0.59	0.03 U	**0.02**	**0.16**	NA	**0.0463** J1	**0.169** J1	**0.0898** J1	**0.104** J1

TABLE 9
ISAACSON WEST
BOEING ISAACSON-THOMPSON
REMEDIAL INVESTIGATION

Indicates concentration exceeds SQS but less than the CSL or the dry weight equivalent values [Lower Apparent Effect Threshold (LAET) and and 2LAET, respectively]

Indicates concentration exceeds the SQS and CSL or dry weight equivalent criteria.

(a) Dry weight equivalent criteria are based on the Puget Sound Apparent Effect Threshold Values (Barrick et al. 1988)

(b) SMS Sediment Quality Standard /Lower Apparent Effects Threshold

(c) SMS Cleanup Screening Level / Second Lower Apparent Effects Threshold

(d) Where chemical criteria in this table represent the sum of individual compounds or isomers, the following methods shall be applied:

(i) Where chemical analyses identify an undetected value for every individual compound/isomer, then the single highest detection limit shall represent the sum of the respective compound/isomers.

(ii) Where chemical analyses detect one or more individual compounds/isomers, only the detected concentrations will be added to represent the group sum.

(e) The total benzofluoranthenes criterion represents the sum of the concentrations of the "B," "J," and "K" isomers.

J = Indicates the analyte was positively identified; the associated numerical value is the approximate concentration of the analyte in the sample.

J1 = Laboratory flag indicating the analyte was positively identified; the associated concentration is approximate and less than the reporting limit, but equal to or greater than the detection limit.

U = Indicates the compound was not detected at or above the reporting limit.

TABLE 10
ANALYTICAL RESULTS FOR DETECTED CONSTITUENTS IN RI STORMWATER SAMPLES
BOEING ISAACSON-THOMPSON
REMEDIAL INVESTIGATION

	RI/FS Groundwater Screening Levels (From Tb 6 of RI/FS WP)*	Outfall A (North)						Outfall B (South)					
		IT-MH32 UM55B/UM58B 03/14/2012			IT-MH32 UR13A/UR28A 4/20/2012			IT-MH80 UM55A/UM58A 03/14/2012			IT-MH80 UR13B/UR28B 4/20/2012		
		Result	Reporting Limit	Detection Limit	Result	Reporting Limit	Detection Limit	Result	Reporting Limit	Detection Limit	Result	Reporting Limit	Detection Limit
VOLATILES (µg/L)													
Method SW8260C													
Acetone	**7200**	5.0 U	5.0	2.1	**5.5**	5.0	2.1	5.0 U	5.0	2.1	**5.6**	5.0	2.1
2-Butanone	**4800**	5.0 U	5.0	0.81	5.0 U	5.0	0.81	5.0 U	5.0	0.81	**2.8** J1	5.0	0.81
Toluene	**1000**	0.2 U	0.2	0.04	**7.5**	0.2	0.04	**24**	0.2	0.04	**16**	0.2	0.04
SVOCs (µg/L)													
2-Methylphenol	**7.1**	1.0 U	1.0	0.53	1.0 U	1.0	0.53	**0.7** J1	1.0	0.53	**0.6** J1	1.0	0.53
bis(2-Ethylhexyl)phthalate	**0.28**	**7.8**	1.0	1.9	**1.2**	1.0	1.9	**1.5**	1.0	1.9	1.0 U	1.0	1.9
cPAHs (µg/L)													
Method SW8270D-SIM													
Chrysene	**0.4661**	**0.0083** J1	0.010	0.0046	**0.0052** J1	0.010	0.0046	**0.0059** J1	0.010	0.0046	0.010 U	0.010	0.0046
TOTAL METALS													
Methods 200.8/SW7196A (µg/L)													
Antimony	**6**	**1.1**	0.2	0.010	**0.3**	0.2	0.010	**0.8**	0.2	0.010	**0.2**	0.2	0.010
Arsenic	**0.058**	**0.3**	0.2	0.048	**0.4**	0.2	0.048	**0.4**	0.2	0.048	0.2 U	0.2	0.048
Barium	**2**	**2.4**	0.5	0.020	**4.2**	0.5	0.020	**3.1**	0.5	0.020	**2.9**	0.5	0.020
Cadmium	**2.56**	**0.3**	0.1	0.010	0.1 U	0.1	0.010	**0.1**	0.1	0.010	0.1 U	0.1	0.010
Chromium	**100**	**1.0**	0.5	0.045	**0.7**	0.5	0.045	0.5 U	0.5	0.045	0.5 U	0.5	0.045
Copper	**7.3**	**2.3**	0.5	0.158	**7.5**	0.5	0.158	**3.0**	0.5	0.158	**1.8**	0.5	0.158
Lead	**11.3**	**2.1**	0.1	0.046	**0.7**	0.1	0.046	**1.3**	0.1	0.046	**0.4**	0.1	0.046
Nickel	**100**	**0.5**	0.5	0.079	0.5 U	0.5	0.079	**1.4**	0.5	0.079	0.5 U	0.5	0.079
Zinc	**32.6**	**81**	4	0.50	**75**	4	0.50	**26**	4	0.50	**26**	4	0.50
CONVENTIONALS (mg/L)													
Total Dissolved Solids (Method 160.1/SM2540C)		**6.0**	5.0	5.00	**13**	5.0	5.00	**14.5**	5.0	5.00	5.0 U	5.0	5.00
Total Suspended Solids (Method 160.2/SM2540D)		**5.4**	1.0	1.00	**2.4**	1.0	1.00	**2.3**	1.0	1.00	1.1 U	1.1	1.06

* Screening levels not adjusted for background

U = Indicates the compound was undetected at the reported concentration.

J = Indicates the analyte was positively identified; the associated numerical value is the approximate concentration of the analyte in the sample.

J1 = Laboratory flag indicating the analyte was positively identified; the associated concentration is approximate and less than the reporting limit, but equal to or greater than the detection limit.

Bold = Detected compound.

Box = Exceedance of screening level.

APPENDIX S

Laboratory Analytical Data

(Included in separate file on this disk)

APPENDIX T

Surface Water Effects on Groundwater Quality and Arsenic Mobility Figures

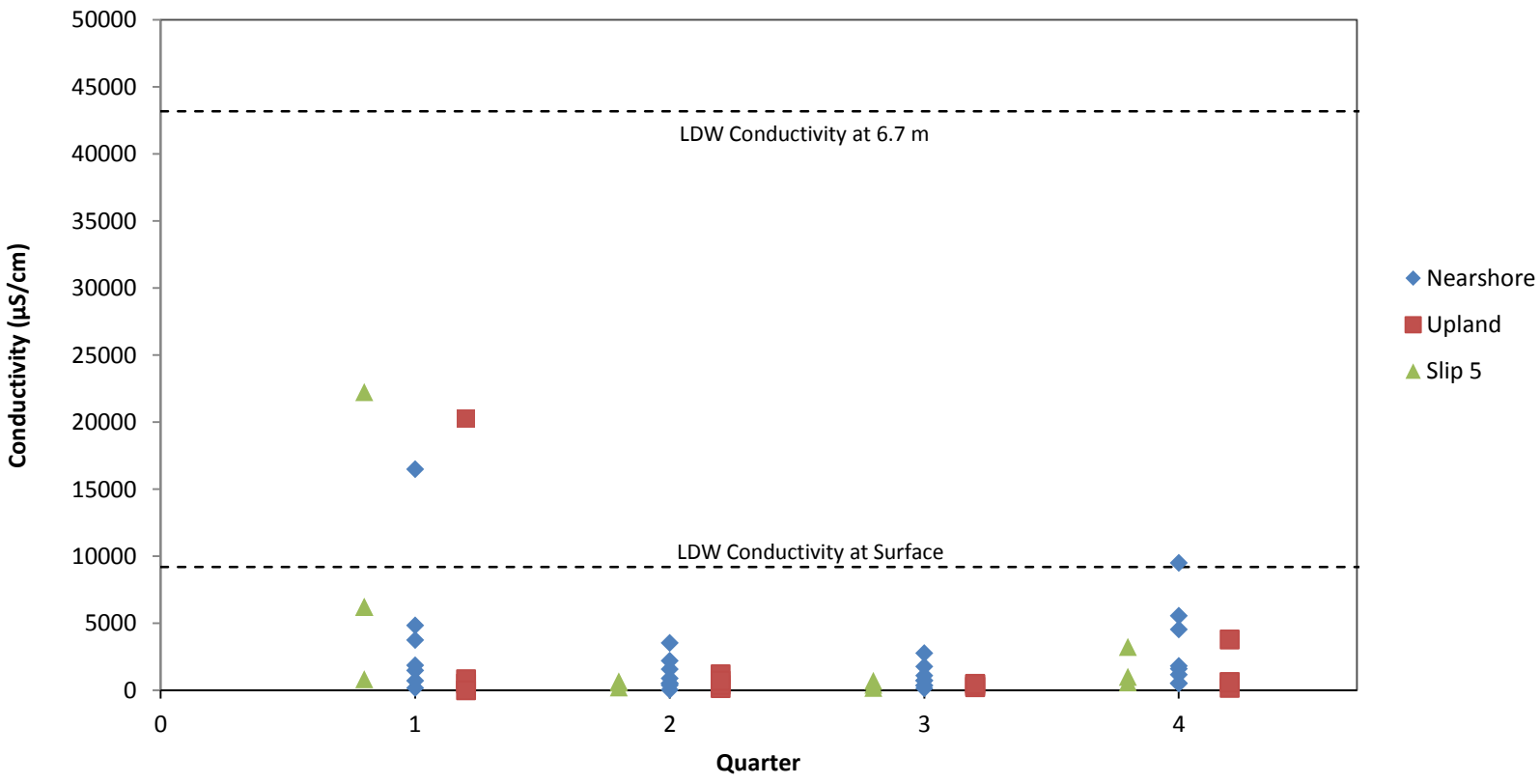

LANDAU ASSOCIATES

Boeing
Isaacson-Thompson Site
Tukwila, Washington

Quarterly Conductivity Comparison

Figure
T-1

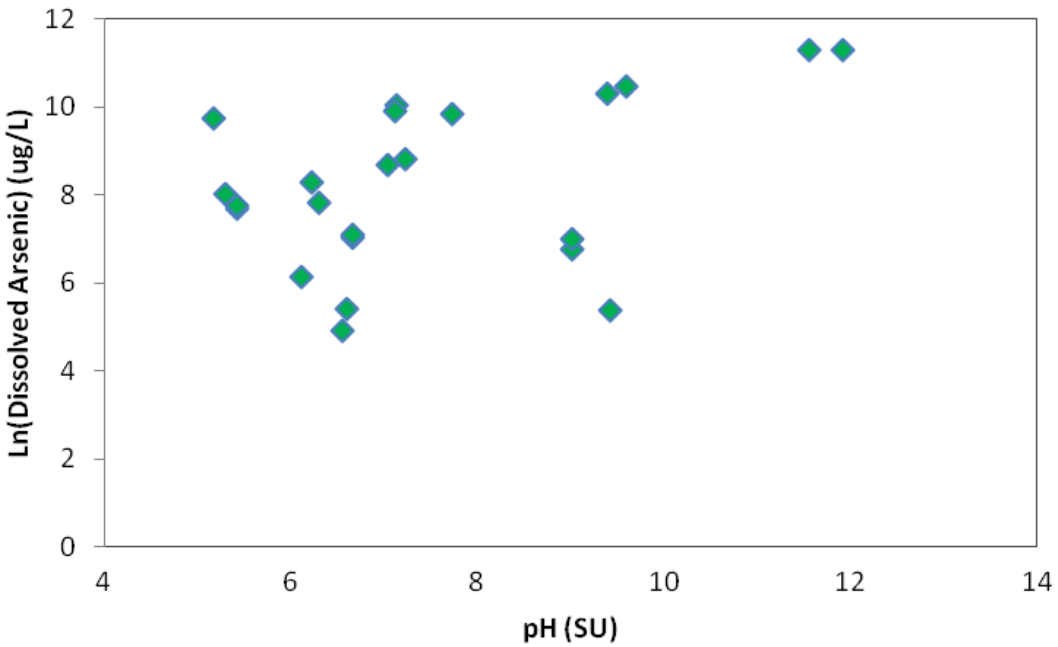

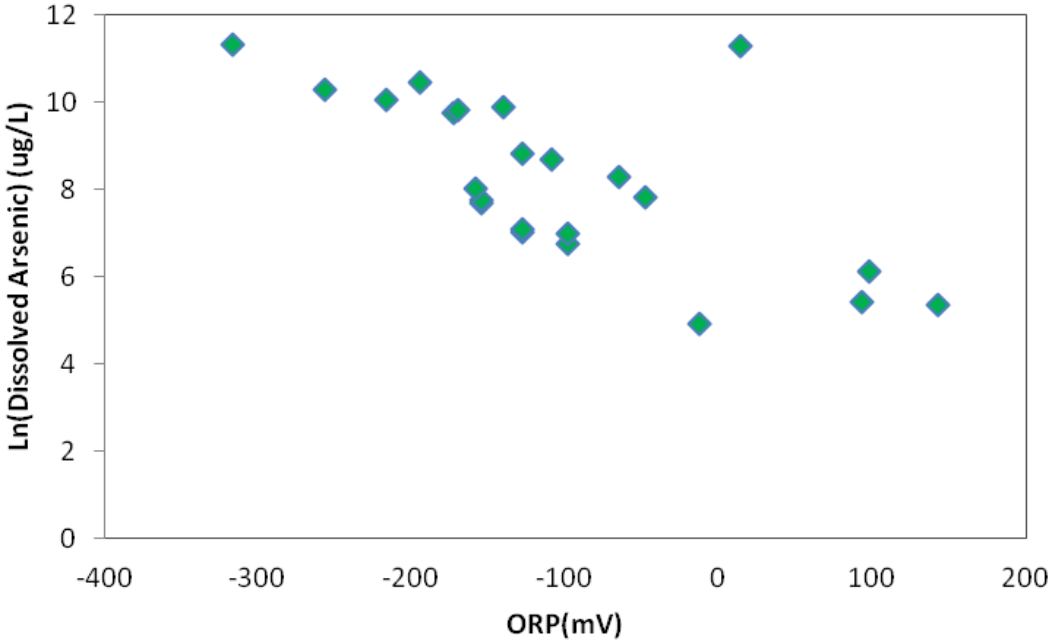

3/24/14 \\edmdata01\projects\025\190\002\FileRm\R\RI Rpt\Revised Draft RI\Appendices\App T Surface Water Effects in Groundwater Quality and Arsenic Mobility Figures\T-2 Arsenic.docx

LANDAU ASSOCIATES

Boeing
Isaacson-Thompson Site
Tukwila, Washington

Arsenic Concentrations Compared to pH and ORP

Figure
T-2