FARALLON consulting

975 5th Avenue Northwest, Issaquah, Washington 98027
Tel. (425) 295-0800 Fax. (425) 295-0850
www.farallonconsulting.com

CLEANUP ACTION PROGRESS REPORT
AUGUST 2006 TO AUGUST 2007

ALLISON'S NORGE VILLAGE (AKA EASTSIDE LAUNDRY)
120 NORTHEAST TURNER STREET
OLYMPIA, WASHINGTON
VCP # SW 0370

Submitted by:
Farallon Consulting, L.L.C.
975 5th Avenue Northwest
Issaquah, Washington 98027

Farallon PN: 663-010

For:
Mr. Wilbur Allison dba Allison's Norge Village Dry Cleaners
c/o Mr. David D. Cullen
West Hills Office Park
Building 11, 1800 Cooper Point Road Southwest
Olympia, Washington 98502

October 19, 2007

Prepared by:

Carla E. Brock, L.G.
Associate Geologist

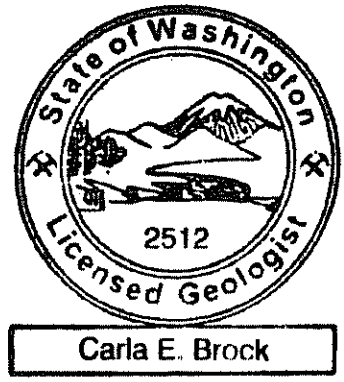

Reviewed by:

J. Riley Conkin, L.G.
Principal Geologist

TABLE OF CONTENTS

1.0 INTRODUCTION 1-1
1.1 PURPOSE AND OBJECTIVES 1-1
1.2 ORGANIZATION 1-2

2.0 SITE DESCRIPTION AND BACKGROUND 2-1

3.0 ADDITIONAL SITE CHARACTERIZATION 3-1
3.1 FIELD ACTIVITIES 3-1
3.1.1 Boring and Monitoring Well Installation 3-1
3.1.2 Groundwater Monitoring and Sampling 3-2
3.2 RESULTS 3-3
3.2.1 Soil 3-3
3.2.2 Groundwater 3-4
3.3 CONCEPTUAL SITE MODEL 3-4

4.0 SOIL VAPOR EXTRACTION SYSTEM CONSTRUCTION AND OPERATION 4-1
4.1 SOIL VAPOR EXTRACTION WELL INSTALLATION 4-1
4.2 SYSTEM CONSTRUCTION 4-1
4.3 WASTE MANAGEMENT 4-2
4.4 SYSTEM STARTUP, OPERATIONS AND MAINTENANCE 4-3
4.5 SYSTEM PERFORMANCE 4-3

5.0 GROUNDWATER COMPLIANCE MONITORING 5-1

6.0 CONCLUSIONS 6-1

7.0 LIMITATIONS 7-1

FIGURES

Figure 1 *Site Location*
Figure 2 *Site Plan*
Figure 3 *Site Plan Showing Soil Analytical Results*
Figure 4 *Site Plan Showing Groundwater Data (September 2006)*
Figure 5 *Site Plan Showing Groundwater Data (June 2007)*

TABLES

Table 1 *Well Construction Summary*
Table 2 *Groundwater Elevation Data Summary*
Table 3 *Summary of Soil Analytical Results*
Table 4 *Summary of Groundwater Analytical Results*
Table 5 *Summary of Soil Analytical Results for Waste Disposal*
Table 6 *Summary of Soil Vapor Extraction System Operation*

APPENDICES

Appendix A Boring/Well Construction Logs
Appendix B Laboratory Analytical Reports
Appendix C Historical Soil Analytical Results
Appendix D SVE System As-Built Drawings
Appendix E SVE System Operations and Maintenance Manual
Appendix F Waste Disposal Documents

1.0 INTRODUCTION

Farallon Consulting, L.L.C. (Farallon) has prepared this Cleanup Action Progress Report to provide a summary of the cleanup activities conducted between August 2006 and August 2007 at the former Allison's Norge Village Dry Cleaners site located at 120 Northeast Turner Street in Olympia, Washington (herein referred to as the Site) (Figure 1). Subsurface investigations at the Site have identified the presence of tetrachloroethene (PCE) in soil and groundwater exceeding the Washington State Department of Ecology (Ecology) Model Toxics Control Act Cleanup Regulation (MTCA) Method A cleanup levels for PCE (Chapter 173-340 of the Washington Administrative Code [WAC 173-340]). The PCE is attributable to releases from dry cleaning operations at the Site.

Based on the results of subsurface investigations conducted at the Site, Farallon prepared the *Draft Cleanup Action Plan*, dated December 14, 2005 (Draft CAP), which was submitted to Ecology for review. The Draft CAP summarizes the Site background and the environmental conditions at the Site, identifies the technical elements of the cleanup action, and presents the remediation system design. Ecology provided comments on the Draft CAP in the letter dated February 28, 2006 regarding *Opinion under WAC 173-340-515(5) on Proposed Cleanup Action for the Following Hazardous Waste Site: Name: Allison's Norge Village (a.k.a. Eastside Laundry)* (Opinion Letter). Based on Ecology's comments, additional Site characterization was conducted at the Site prior to implementation of the selected cleanup action. The cleanup action completed to date consists of installation, operation, and maintenance of a soil vapor extraction (SVE) remediation system at the Site, and quarterly performance soil vapor sampling, and groundwater monitoring and sampling.

The cleanup action is being conducted in accordance with MTCA as an independent remedial action under Ecology's Voluntary Cleanup Program to meet the requirements to obtain a No Further Action determination for the Site.

1.1 PURPOSE AND OBJECTIVES

The purpose of this Cleanup Action Progress Report is to:

- Present a brief summary of the background information for the Site;
- Provide a description of the methods and results of the additional Site characterization;
- Provide a description of the cleanup action completed to date at the Site; and
- Describe the future work planned.

The objectives of the cleanup action are to meet the threshold requirements at the defined points of compliance; protect human health and the environment; comply with applicable state and federal laws; provide for compliance monitoring; and provide a permanent solution to the maximum extent practicable in accordance with WAC 173-340-360(2).

1.2 ORGANIZATION

This Cleanup Action Progress Report has been organized into the following sections:

- Section 2 presents a description of the Site and a brief summary of the project background;
- Section 3 provides a description of the methods and results of the additional Site characterization. An updated conceptual site model is also included in Section 3;
- Section 4 provides a description of the installation, startup, operations and performance of the SVE system;
- Section 5 presents a description of the methods and results of the first quarterly groundwater compliance monitoring and sampling event;
- Section 6 presents the conclusions; and
- Section 7 includes Farallon's standard limitations.

2.0 SITE DESCRIPTION AND BACKGROUND

This section provides a brief description of the physical Site and the Site background. Additional details regarding the previous environmental investigations and environmental setting of the Site can be referenced in the Draft CAP.

The Site is located at 120 Northeast Turner Street in Olympia, Washington (Figure 1). The Site currently is developed with a single-story brick masonry building located on the northwestern portion of the Site that was constructed in the early 1960s (Figure 2). The remaining Site areas are covered with asphalt. The building is developed with four separate suites that currently are occupied by Eastside Laundry, a barbershop, and an insurance broker (Figure 2). Eastside Laundry occupies the northern and southern suites. Both historic and current dry cleaning operations have been located in the northern suite. According to Eastside Laundry, the southern suite is used only for laundry pick-up and drop-off. The Site is adjoined by State Street to the north, Turner Street to the west, and a paved parking lot for a grocery store to the south and east (Figure 2).

Dry cleaning operations commenced at the Site in the early 1960s, and continue to the present. Records reviewed from the City of Olympia Office of Public Works indicate that a sanitary side sewer line was installed in May 1962 for a self-service dry cleaner located in the northern suite of the Site building. Owner/operator records for the dry cleaner prior to 1970 were not available. A review of information provided by the property owner indicates that the dry cleaner was operated by Wilma M. White from June 1970 to July 1978, and by Donald Nedrow from July 1978 to September 1984. From late 1984 to late 1990, Mr. Allison dba Allison's Norge Village Dry Cleaners, operated the dry cleaner, which included eight coin-operated dry cleaning machines located on the south side of the Dry Cleaner Suite (Figure 2). According to Mr. Allison, the coin-operated dry cleaning machines were supplied with PCE from an aboveground storage tank located inside the building (Figure 2). According to Mr. Bergt, the current operator of Eastside Laundry, the coin-operated dry cleaning machines were not in use when Eastside Laundry took over the dry cleaner from Allison's Norge Village in late 1990. Subsequently, Eastside Laundry disassembled the coin-operated dry cleaning machines in late 1990, and installed a single, dry-to-dry type commercial dry cleaning machine in place of the coin-operated dry cleaning machines. The aboveground PCE storage tank was pumped out in late 1990, and remains in-place.

Based on the subsurface investigations conducted at the Site, the general stratigraphy is divided into the Shallow Zone, the Intermediate Zone, and the Deep Zone. The Shallow Zone is comprised of silts, silty sands, and sands from just below the ground surface to total depths ranging from 20 to 35 feet bgs. The Intermediate Zone is comprised predominantly of dense silty gravels and silty sands with cobbles encountered below 20 to 35 feet bgs to total depths ranging from 85 to 90 feet bgs. The underlying Deep Zone is comprised predominantly of gravels encountered from approximately 85 to 90 feet bgs to the maximum depth explored at the Site of 105 feet bgs in boring MW-2. Groundwater is present only in the Deep Zone at the Site. Groundwater measured in Deep Zone monitoring wells MW-2, MW-5, and MW-7 was encountered at depths ranging from 77 to 88 feet bgs, and appears to fluctuate seasonally. The

well construction details for monitoring wells screened within each of the water bearing zones is presented on Table 1. Table 2 presents a summary of groundwater elevations in the monitoring wells at the Site.

3.0 ADDITIONAL SITE CHARACTERIZATION

The additional Site characterization was conducted at the Site in response to the Ecology Opinion Letter. The Opinion Letter indicates that Ecology supports the use of SVE as an interim source removal action to reduce concentrations of PCE in soil. However, the Opinion Letter also indicates that the proposed cleanup action is not likely to be sufficient to meet the substantive requirements of MTCA because of the unknown nature and extent of soil contamination to the southwest, west, northwest, and north, and by the undefined groundwater flow direction, gradient, and extent of dissolved-phase PCE in groundwater. The purpose of the additional Site characterization was to address the data gaps identified by Ecology in the Opinion Letter in order to meet the requirements of WAC 173-340-350. This section describes the field activities conducted during the additional Site characterization, summarizes the results of the additional Site characterization, and presents a modified site conceptual model based on the results.

3.1 FIELD ACTIVITIES

The field activities for the additional Site characterization included the following activities:

- Contacting Applied Professional Services, Inc. of North Bend, Washington to clear all boring locations of subsurface utility lines;
- Contacting the One Call Utility-Notification Center to locate and mark the locations of all underground utility lines in the rights-of-way and easements around the Site and the planned drilling locations;
- Completing borings and installing monitoring wells MW-9, MW-10 and MW-11;
- Completing borings EB-12, EB-13 and EB-14;
- Collecting and submitting select soil samples from the borings for laboratory analysis;
- Developing newly installed monitoring wells MW-9, MW-10 and MW-11;
- Contacting Professional Land Surveyors, Inc. of Issaquah, Washington to survey the vertical elevation of the top of each well casing for monitoring wells MW-9, MW-10 and MW-11; and
- Conducting groundwater monitoring and sampling at monitoring wells MW-2, MW-5, and MW-7, as well as newly installed monitoring wells MW-9, MW-10, and MW-11.

Additional details of the Site characterization field activities are described in the following sections.

3.1.1 Boring and Monitoring Well Installation

Monitoring wells MW-9, MW-10, and MW-11 were drilled and installed between August 21 and 25, 2006 by Cascade Drilling, Inc. of Woodinville, Washington using a sonic drill rig. The monitoring wells were installed to provide data on the groundwater flow direction and gradient, and the lateral extent of the dissolved-phase plume of PCE in the Deep Aquifer. Borings EB-12,

EB-13 and EB-14 were completed on August 31, 2006 using a limited-access, hollow stem auger drill rig operated by Cascade Drilling, Inc. The borings were completed to evaluate the nature and extent of concentrations of PCE in soil exceeding the MTCA Method A cleanup level to the north, northwest, and west of the source area. The monitoring well and boring locations are depicted on Figure 2.

The borings for monitoring wells MW-9, MW-10, and MW-11 were logged continuously during drilling from the ground surface to the total depth of the boring. Soil samples were collected and retained in 5-foot intervals between the ground surface and 50 feet bgs and in 10-foot intervals from 50 feet bgs to the total depth of the boring in borings MW-9 and MW-10. Soil samples were collected and retained in 5-foot intervals beginning at a depth of 105 feet bgs in boring MW-11 to the total depth of the boring. Five soil samples from boring MW-9 and two soil samples each from borings MW-10 and MW-11 were selected and submitted to OnSite Environmental Inc. of Redmond, Washington for laboratory analysis of halogenated volatile organic compounds (HVOCs) by U.S. Environmental Protection Agency (EPA) Method 8260B.

Borings EB-12, EB-13, and EB-14 were logged and sampled in 5-foot intervals beginning at 5 feet bgs to the total depth of 40 feet bgs in borings EB-12 and EB-13 and 30 feet bgs in boring EB-14. Two to three samples from each of borings EB-12, EB-13, and EB-14 were submitted to OnSite Environmental, Inc. for laboratory analysis of HVOCs by EPA Method 8260B. A thin, perched water-bearing zone was encountered in boring EB-14 at a depth of approximately 25 feet bgs. A groundwater sample of the perched groundwater was collected and submitted to OnSite Environmental, Inc. for laboratory analysis of HVOCs by EPA Method 8260B. The borings were backfilled with hydrated bentonite chips and the surface was patched to pre-existing conditions.

The soil was observed at each sample interval and the soil was classified according to the Unified Soil Classification System (USCS), as documented along with visual and olfactory observations, and measurements of volatile organic vapors in each sample as determined using a photoionization detector (PID). These observations are documented on the Log of Boring forms for each monitoring well, which are included in Appendix A.

The monitoring well locations are depicted on Figure 2. Each monitoring well was constructed with 5 feet of screen set at a total depth of approximately 115 feet. Following installation, each monitoring well was developed using a surge block and submersible pump. The top of each monitoring well casing was surveyed by Professional Land Surveyors, Inc. of Issaquah, Washington into the existing well survey at the Site. The well depth of each monitoring well and monitoring well casing elevations are summarized on Table 1.

3.1.2 Groundwater Monitoring and Sampling

Groundwater monitoring and sampling of the Deep Aquifer monitoring wells, including MW-2, MW-5, MW-7, MW-9, MW-10 and MW-11, was conducted on September 16 and 17, 2006. Prior to sampling, the water level in each monitoring well was measured to the nearest 0.01-foot from the surveyed point on the top of the well casing. The monitoring wells were purged and sampled using a submersible bladder pump at low-flow rates ranging from 100 to 300 milliliters

per minute. Groundwater quality parameters, including dissolved oxygen, pH, temperature, oxidation-reduction potential, and specific conductance were measured and recorded during purging. Upon stabilization, groundwater samples were collected from each monitoring well and submitted for laboratory analysis of HVOCs by EPA Method 8260B.

3.2 RESULTS

The laboratory analytical reports of the soil and groundwater samples during the additional Site characterization activities are included in Appendix B. The laboratory analytical results are summarized on Tables 3 and 4, respectively, and on Figures 3 and 4, respectively. The following sections provide a summary of the results of the additional Site characterization for soil and groundwater.

3.2.1 Soil

The soil observed during the drilling activities is consistent with the soil observed during previous investigations. Sand and silty sand was observed from the surface to depths ranging from 22 to 25 feet bgs. A lithologic layer consisting of gravel with varying amounts of silt and sand is present beneath the sand unit. Groundwater was encountered at the time of drilling at depths of 88 to 102 feet bgs. The base of the gravel water-bearing unit was observed at depths of 112 to 116 feet bgs. The aquitard at the base of the water-bearing zone is composed of silt.

A total of 16 soil samples were selected from soil borings MW-9, MW-10, MW-11, EB-12, EB-13, and EB-14 for laboratory analysis. The laboratory analytical results are summarized on Table 3. Figure 3 depicts the locations of the monitoring wells and soil borings and the laboratory analytical results for soil samples submitted for laboratory analysis.

Boring MW-9 is assumed to be directly down-gradient, west of the source area at the Site. Five soil samples collected between 9 feet bgs and 118 feet bgs were submitted for laboratory analysis. The laboratory analytical results did not detect concentrations of PCE exceeding the MTCA Method A cleanup level (Table 3). Concentrations of PCE were detected below the MTCA Method A cleanup level in the soil samples collected at and above 51 feet bgs in boring MW-9. These detected concentrations of PCE are likely associated with vapor phase migration of PCE in the shallow subsurface soil surrounding the source area. The laboratory analytical results from boring MW-9 indicate that the extent of PCE in soil to the west of the source area has been defined.

Concentrations of PCE below the MTCA Method A cleanup levels were detected in shallow subsurface soil samples collected from boring MW-10 and boring EB-14, located northwest and north of the source area respectively (Figure 2). The concentrations of PCE detected in shallow subsurface soil samples collected from borings MW-10 and EB-14 are likely associated with vapor phase migration of PCE in the shallow subsurface soil surrounding the source area. The laboratory analytical results from monitoring well MW-10 and boring EB-14 indicate that the extent of PCE in soil to the north and northwest of the source area has been defined.

The deeper soil samples collected from monitoring wells MW-9, MW-10, and MW-11 were reported non-detect for PCE at the laboratory practical quantitation limits (PQLs).

The laboratory analytical results of soil samples collected from soil borings EB-12 and EB-13 detected concentrations of PCE above the MTCA Method A cleanup level at depths of 5 feet, 15 feet, and/or 20 feet bgs (Table 3, Figure 3).

3.2.2 Groundwater

The measured depths to groundwater on September 16, 2006 in the Deep Aquifer ranged from 81.80 feet (monitoring well MW-2) to 86.40 feet (monitoring well MW-9) below the top of the well casing (Table 2). The calculated groundwater elevations, based on an arbitrary Site datum, indicate that the groundwater flow direction within the Deep Aquifer is towards the west-southwest at an average hydraulic gradient of 0.04 feet per foot (Figure 4).

The laboratory analytical results detected concentrations of PCE in the groundwater samples collected from monitoring wells MW-2, MW-5, and MW-7 exceeding the MTCA Method A cleanup level. The detected concentrations of PCE in groundwater range from 7.3 to 400 micrograms per liter (µg/l) (Table 4). The highest concentration of PCE was detected in monitoring well MW-2, which is immediately adjacent to the north side of the Dry Cleaner Suite (Figure 4). A concentration of 0.42 µg/l PCE, which is below the MTCA Method A cleanup level, was detected in the groundwater sample collected from monitoring well MW-11. Well MW-11 is also located adjacent to the north side of the Dry Cleaner Suite. Groundwater samples collected from down-gradient and cross-gradient monitoring wells MW-9 and MW-10 were reported non-detect for PCE at the laboratory PQL (Table 4).

Based on the results of the September 16, 2006 groundwater monitoring and sampling event, the dissolved-phase PCE groundwater plume is bounded by monitoring well MW-9, which did not contain concentrations of PCE above the MTCA Method A cleanup level and is down-gradient of the source area. Additionally, the vertical extent of dissolved-phase groundwater PCE plume is bounded by monitoring well MW-11, which is screened at the base of the Deep Aquifer and did not contain concentrations of PCE above the MTCA Method A cleanup level.

The laboratory analytical results for the reconnaissance groundwater sample collected from boring EB-14 detected PCE at a concentration of 280 µg/l (Appendix B). Similar to the conditions observed in the vicinity of monitoring wells MW-6 and MW-8, the perched groundwater encountered in boring EB-14 is not considered representative of a water-bearing zone, as it is discontinuous and has a thin vertical extent. The concentrations of PCE in the perched groundwater likely are attributable to the vapor-phase migration of PCE from the source area. Boring EB-14 is located within the area of influence of the remediation system and the concentrations of PCE in the vadose zone and the perched groundwater are expected to decrease with operation of the remediation system.

3.3 CONCEPTUAL SITE MODEL

A conceptual site model was presented in detail in the Draft CAP. The results of the additional Site characterization provide additional information to refine the conceptual site model.

The results of the additional Site characterization indicate that the lateral and vertical extent of PCE in soil at concentrations exceeding the MTCA Method A cleanup level has been defined to

the north, northwest, and west of the Site. Figure 3 depicts the approximate extent of PCE in soil at concentrations exceeding the MTCA Method A cleanup levels. The historical laboratory analytical results for soil were used to estimate the extent of PCE in soil are depicted on Figure 3 and summarized in Appendix C. In general, PCE concentrations in soil attenuate rapidly both laterally and vertically from the source area.

The concentrations of PCE detected at borings EB-12 and EB-13 indicate that the lateral extent of PCE in soil exceeding the MTCA Method A cleanup levels has not been defined to the southwest of the source area. The concentrations of PCE detected in shallow subsurface soil may be attributable to preferential transport along underground utility lines or vapor phase migration from the source area. Although the PCE concentrations in soil slightly exceed the MTCA Method A cleanup level at borings EB-12 and EB-13, it is Farallon's opinion that the lateral extent of PCE in soil has been sufficiently characterized to support the ongoing cleanup action. Further, the locations of borings EB-12 and EB-13 are within the radius of influence of SVE wells and the concentrations of PCE in soil are expected to be removed with operation of the SVE system.

The interpreted groundwater flow direction in the Deep Aquifer calculated using the September 2006 depth to groundwater measurement is towards the west-southwest (Figure 4). The results of groundwater monitoring and sampling at monitoring well MW-9, which is located down-gradient, west of the source area, indicate that the lateral extent of dissolved-phase PCE in groundwater has been defined. Additionally, the concentrations of PCE detected in groundwater samples collected from monitoring well MW-11, screened at the base of the water-bearing zone in the source area, indicate that the vertical extent of dissolved-phase PCE in groundwater has been defined. The concentration of PCE detected in groundwater in monitoring well MW-11 is below the MTCA Method A cleanup level and indicates that dense non-aqueous phase liquid (DNAPL) is not present in the groundwater-bearing zone beneath the source area.

4.0 SOIL VAPOR EXTRACTION SYSTEM CONSTRUCTION AND OPERATION

This section provides a description of the construction and operation of the SVE system, which was conducted in accordance with the scope of work described in the Draft CAP.

4.1 SOIL VAPOR EXTRACTION WELL INSTALLATION

The SVE system operates through the use of 18 vertical SVE wells and one horizontal SVE well. The vertical SVE wells include 11 screened in the Shallow Zone and 6 screened in the Intermediate Zone, as described in the Draft CAP. Existing monitoring wells MW-3, MW-4, and MW-6 were modified to operate as SVE wells in the Shallow Zone and are identified as SVE wells SVE-2S, SVE-14S, and SVE-12S, respectively (Figure 2). Monitoring wells MW-1 and MW-8 were modified to operate as SVE wells in the Intermediate Zone and are identified as SVE wells SVE-1I and SVE-10I (Figure 2).

The remainder of the SVE wells, with the exception of SVE wells SVE-11S and SVE-11H, were installed by Cascade Drilling, Inc. between September 14 and 20, 2006 using a full-size hollow stem auger drill rig. The Shallow Zone SVE wells were constructed with 17 feet of screen set between 3 and 20 feet bgs. The Intermediate Zone SVE wells were constructed with 35 feet of screen set between 25 and 60 feet bgs. The Log of Boring for each SVE well depicts the construction details and is included in Appendix A. The screened intervals for the SVE wells are summarized on Table 1.

SVE wells SVE-11S and SVE-11H were completed inside the Site building in the suspected source area. SVE well SVE-11S is a vertical SVE well, which was installed during construction of the SVE system to a total depth of 5.3 feet bgs, with a screened interval extending from 1.75 to 5.3 feet bgs. SVE well SVE-11H is a horizontal SVE well, which was installed horizontally beneath the floor slab in the suspected source area. SVE well SVE-11H consists of a 6-foot long slotted section of 4-inch PVC set in coarse sand at a depth of approximately 1.5 feet bgs. The addition of the horizontal SVE well was a modification to the scope of work in the Draft CAP, which was designed to augment the removal of additional mass of PCE present in the immediate vicinity of the suspected source.

The SVE wells are connected to the remediation compound by 2-inch diameter Schedule 40 PVC pipes. Additionally, high density polyethylene tubing runs from each SVE well to the compound to allow for potential future air sparging expansion. The details of SVE system construction are included on the As-Built drawings presented in Appendix D.

4.2 SYSTEM CONSTRUCTION

The SVE system was constructed as described in detail in the Draft CAP and as depicted on the As-Built drawings presented in Appendix D. A brief description of the SVE system construction is provided below.

The SVE system was constructed between December 4, 2006 and January 25, 2007 by Saybr Contractors, Inc. of Tacoma, Washington. The construction activities included trenching and laying piping underground to connect each of the SVE wells to the remediation compound and constructing the aboveground components of the SVE system, including the mechanical equipment, electrical controls and remediation compound. The remediation compound was constructed parallel to the west side of the building (Figure 2). The SVE system consists of one mechanical system installed within the remediation compound. The SVE system consists of:

- A 15-hp, 230-volt, Ametek Rotron regenerative blower (model number DR909RDNT) with a 3-phase motor;
- An Ametek Gast RMS 300, 55-gallon water knockout tank;
- A FlowTect L-6 float switch;
- A Shurflow Diaphragm Pump;
- A 55-gallon knockout overflow tank;
- A Dwyer Series 1823 Low Differential Pressure Switch;
- An air bleed valve;
- An in-line filter prior to the blower;
- Two 2,000-pound granulated activated carbon canisters, in series; and
- A discharge stack.

The final layout of the remediation compound is depicted on the As-Built drawings presented in Appendix D. The SVE system Operations and Maintenance Manuel is included in Appendix E.

4.3 WASTE MANAGEMENT

Soil was generated during the additional Site characterization activities, installation of the SVE wells, and trenching for installation of the underground piping. Prior to commencement of the activities on the Site, Farallon prepared the *Request for Contained-In Approval* dated September 16, 2006 and submitted the request to Ecology. Ecology approved the request, as documented in the November 2, 2006 *Disposal of Soils with F002-Listed Dangerous Waste Constituents*, which allowed disposal of all soil generated during the activities as non-hazardous waste at the Waste Management Columbia Ridge Landfill in Arlington, Oregon. The disposal of the soil as non-hazardous waste was contingent upon the laboratory analytical results of two discrete soil samples collected from each full bin using EPA Method 5035A for sampling soil for low-level HVOCs. The detected concentrations of PCE in all samples were required to be below the MTCA Method B Cleanup Level for Direct Contact of 1.9 mg/kg for PCE in soil.

The generated soil was placed in 20 yard, lined and covered, roll off bins on the Site for temporary storage. Discrete soil samples were collected from each full bin and submitted to OnSite Environmental, Inc. for laboratory analysis. The analytical results were used to confirm that the concentrations of PCE were below the 1.9 mg/kg threshold for disposal of the soil as

non-hazardous waste. Following confirmation of the concentrations of PCE, the roll off bins of soil were subsequently picked up by Waste Management.

A total of 12 roll off bins of soil were generated during the activities on the Site. The laboratory analytical results detected concentrations of PCE in discrete soil samples ranging from 0.016 mg/kg to 1.7 mg/kg. The laboratory analytical results are summarized on Table 5. The laboratory analytical reports are attached in Appendix B. A total of 146.56 tons of soil was transported to the Waste Management Columbia Ridge Landfill in Arlington, Oregon for disposal as non-hazardous solid waste. The waste disposal documents are included in Appendix F.

4.4 SYSTEM STARTUP, OPERATIONS AND MAINTENANCE

SVE system construction, start-up, and optimizing were preformed between December 4, 2006 and February 14, 2007. Start-up for continual operation of the SVE system occurred on April 4, 2007. The SVE system settings during startup are summarized on Table 6. Following initial start-up and adjustment of the SVE system, regular operation and maintenance (O&M) visits were made to monitor operations and make necessary adjustments to optimize SVE system performance. O&M visits were conducted April 11, April 23, May 11, and June 11, 2007 (Table 6). During each visit flow rates for the SVE system were measured, PCE concentrations were measured in select wells, and the data used to make the necessary adjustments to maximize PCE removal from the Site.

During SVE system start-up and the first two weeks of operation, air samples were collected in Tedlar bags and submitted to Onsite Environmental, Inc. for laboratory analysis of PCE. Compound specific Gastec tubes were also used to measure PCE in select SVE wells and in emissions from the SVE system. The Gastec air sampling methodology yielded results that were lower than laboratory analytical results, but more consistent with field observations and suspected operating parameters of the SVE system. Table 6 summarizes both the laboratory and field data.

The SVE system was shut down on June 11, 2007, in accordance with the requirements of the Olympic Region Clean Air Agency (ORCAA) permit, after breakthrough of the first carbon canister was observed. Farallon is in the process of replacing the carbon in the canister so that the SVE system can continue to operate.

4.5 SYSTEM PERFORMANCE

The SVE system operated actively for a period of two months prior to shut down on June 11, 2007 to replace the carbon in the first carbon canister. During that time period, the SVE system operated with a total vacuum ranging from 24 to 32 inches of water (Table 6). The average flow rate from each operating SVE well was 39.22 cubic feet per minute. Concentrations of PCE were measured in individual SVE wells ranging from 0.6 to 28 parts per million volume (Table 6). Based on flow rates to individual SVE wells and measured concentrations of PCE in individual SVE wells, the SVE system settings were modified to maximize flow to SVE wells that were withdrawing a greater mass of PCE. The SVE wells with

low rates of PCE removal were not operated to allow greater flow to those with higher rates of PCE removal. A calculated total of 226.48 pounds of PCE was removed from the soil during the first two months of operation of the SVE system (Table 6).

5.0 GROUNDWATER COMPLIANCE MONITORING

The first compliance groundwater monitoring and sampling event was conducted on July 10, 2007, following three months of operation of the SVE system. The groundwater compliance monitoring was conducted in accordance with the scope of work outlined in the Draft CAP for groundwater performance monitoring.

The depth to groundwater was measured from the top of the monitoring well casing to the nearest 0.01-foot from the surveyed point on the top of the well casing in monitoring wells MW-1 through MW-11. Monitoring wells MW-2, MW-5, MW-7, MW-9, MW-10, and MW-11, all of which are screened within the Deep Aquifer, were purged and sampled using a submersible bladder pump at low-flow rates ranging from 100 to 300 milliliters per minute. Groundwater quality parameters, including dissolved oxygen, pH, temperature, oxidation-reduction potential, and specific conductance were measured and recorded during purging. Upon stabilization, groundwater samples were collected from each monitoring well and submitted for laboratory analysis of HVOCs by EPA Method 8260B.

The depth to groundwater measured on July 10, 2007 in monitoring wells screened within the Deep Aquifer ranged from 75.90 feet below the top of the well casing in monitoring well MW-9 to 79.76 feet below the top of the well casing in monitoring well MW-7 (Table 2). Groundwater was not present in monitoring wells MW-3 or MW-4, which are completed at total depths of 20 and 25 feet bgs, respectively. Monitoring well MW-6 contained 0.08 feet of measurable groundwater in the bottom of the well casing, which is likely indicative of condensation in the end cap of the monitoring well and is not considered representative of a water-bearing zone. Monitoring wells MW-1 and MW-8, which may be screened within thin, discontinuous water-bearing zones, contained measurable groundwater at thicknesses of 1.70 feet and 0.63 feet, respectively (Table 2).

The interpreted groundwater flow direction in the Deep Aquifer calculated using the July 10, 2007 groundwater level measurements is towards the west-southwest at an average hydraulic gradient of 0.03 feet per foot (Figure 5).

The laboratory analytical results detected concentrations of PCE exceeding the MTCA Method A cleanup levels in the groundwater samples collected from monitoring wells MW-2, MW-5, MW 7, and MW-11. The detected concentrations of PCE range from 9 micrograms per liter (µg/l) to 920 µg/l (Table 4).

Monitoring wells MW-5 and MW-11 are located approximately 5 feet apart with screened intervals separated by 10 vertical feet. Monitoring well MW-11 is set at the base of the Deep Aquifer and monitoring well MW-5 is set shallower within the Deep Aquifer. The monitoring wells are sampled with the bladder pump intake set at the approximate center of the screened interval, which indicates a sample depth of approximately 92.5 feet bgs in monitoring well MW 5 and 112.5 feet bgs in monitoring well MW-11. The laboratory analytical results for the July 10, 2007 groundwater monitoring and sampling event indicate a decrease in PCE

concentrations with depth from 53 µg/l to 9 µg/l over the twenty vertical feet between the sample locations for monitoring wells MW-5 and MW-11.

6.0 CONCLUSIONS

The results of the additional Site characterization have delineated the lateral and vertical extent of concentrations of PCE in groundwater exceeding the MTCA Method A cleanup level. The lateral and vertical extent of PCE in soil at concentrations exceeding the MTCA Method A cleanup level has been defined to the west, northwest and north; however, concentrations of PCE in soil borings EB-12 and EB-13 indicate that the lateral extent of PCE in soil exceeding the MTCA Method A cleanup levels has not been defined to the southwest of the source area. Although the PCE concentrations in soil slightly exceed the MTCA Method A cleanup level at borings EB-12 and EB-13, it is Farallon's opinion that the lateral extent of PCE in soil has been sufficiently characterized to support the ongoing cleanup action. Further, the locations of soil borings EB-12 and EB-13 are within the radius of influence of SVE wells and the concentrations of PCE in soil are expected to be removed with operation of the SVE system.

The SVE system was installed in accordance with the scope of work defined in the Draft CAP. The SVE system installation included installation of 11 new SVE wells, conversion of 8 existing monitoring wells to SVE wells, trenching and installation of underground piping, and construction of the electrical and mechanical components of the SVE system. The SVE system began operation on April 4, 2007 and operated continuously until June 11, 2007 when it was shut down for replacement of the carbon in the first treatment canister in accordance with the requirements of the ORCAA operating permit. During the first 9½ weeks of SVE system operation, a total of 226.48 pounds of PCE was removed from the vadose zone at the Site.

The first groundwater compliance monitoring event after startup of the SVE system was conducted on July 10, 2007. The interpreted groundwater flow direction on July 10, 2007 was to the west-southwest at an average hydraulic gradient of 0.03 feet per foot. Concentrations of PCE exceeding the MTCA Method A cleanup levels were detected in the groundwater samples collected from monitoring wells MW-2, MW-5, MW-7, and MW-11. The down-gradient extent of the dissolved-phase groundwater PCE plume is bounded by monitoring well MW-9.

Farallon will continue to operate the SVE system following replacement of the carbon in the first carbon canister and monitor the SVE system operations on a monthly basis. The next quarterly groundwater compliance monitoring event is scheduled for October 2007.

7.0 LIMITATIONS

The conclusions and recommendations contained in this report/assessment are based on professional opinions with regard to the subject matter. These opinions have been arrived at in accordance with currently accepted hydrogeologic and engineering standards and practices applicable to this location and are subject to the following inherent limitations:

- **Accuracy of Information.** Certain information utilized by Farallon in this report/assessment has been obtained, reviewed, and evaluated from various sources believed to be reliable. Although Farallon's conclusions, opinions, and recommendations are based in part on such information, Farallon's services did not include the verification of its accuracy or authenticity. Should such information prove to be inaccurate or unreliable, Farallon reserves the right to amend or revise its conclusions, opinions, and/or recommendations.

FIGURES

CLEANUP ACTION PROGRESS REPORT
AUGUST 2006 TO AUGUST 2007
Allison's Norge Village (AKA Eastside Laundry)
120 Northeast Turner Street
Olympia, Washington
VCP # SW 0370

Farallon PN: 663-010

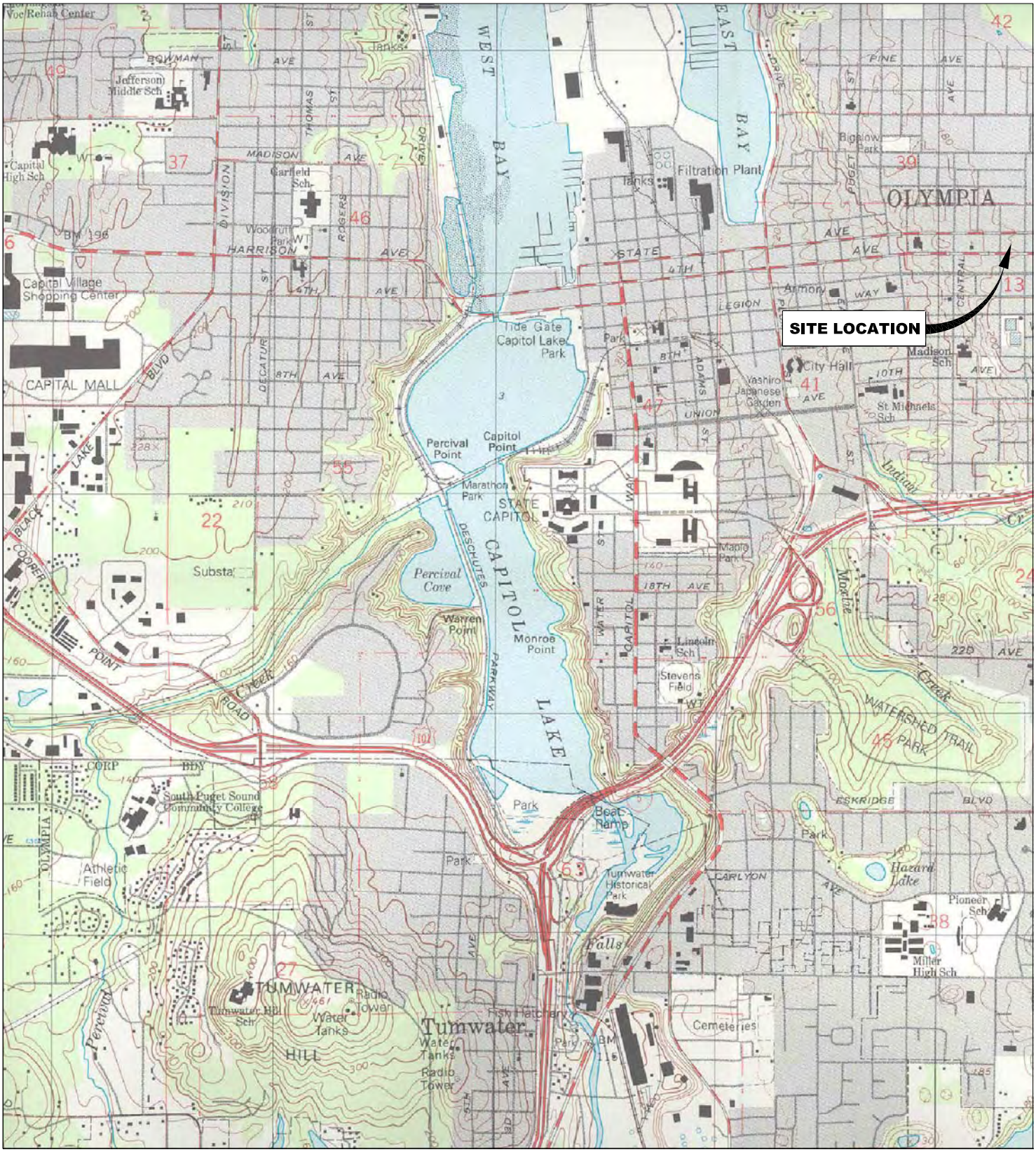

REFERENCE: 7.5 MINUTE USGS QUADRANGLE TUMWATER, WASHINGTON. DATED 1997

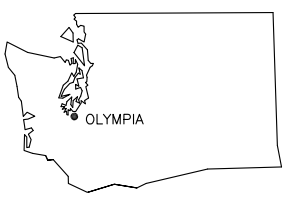



FARALLON CONSULTING
975 5th Avenue Northwest
Issaquah, WA 98027

FIGURE 1

SITE LOCATION
ALLISON'S NORGE VILLAGE
120 NORTHEAST TURNER STREET
OLYMPIA, WASHINGTON

FARALLON PN: 663-010

Drawn By: DEW	Checked By: RC	Date: 10/08/07	Disk Reference: 663010a

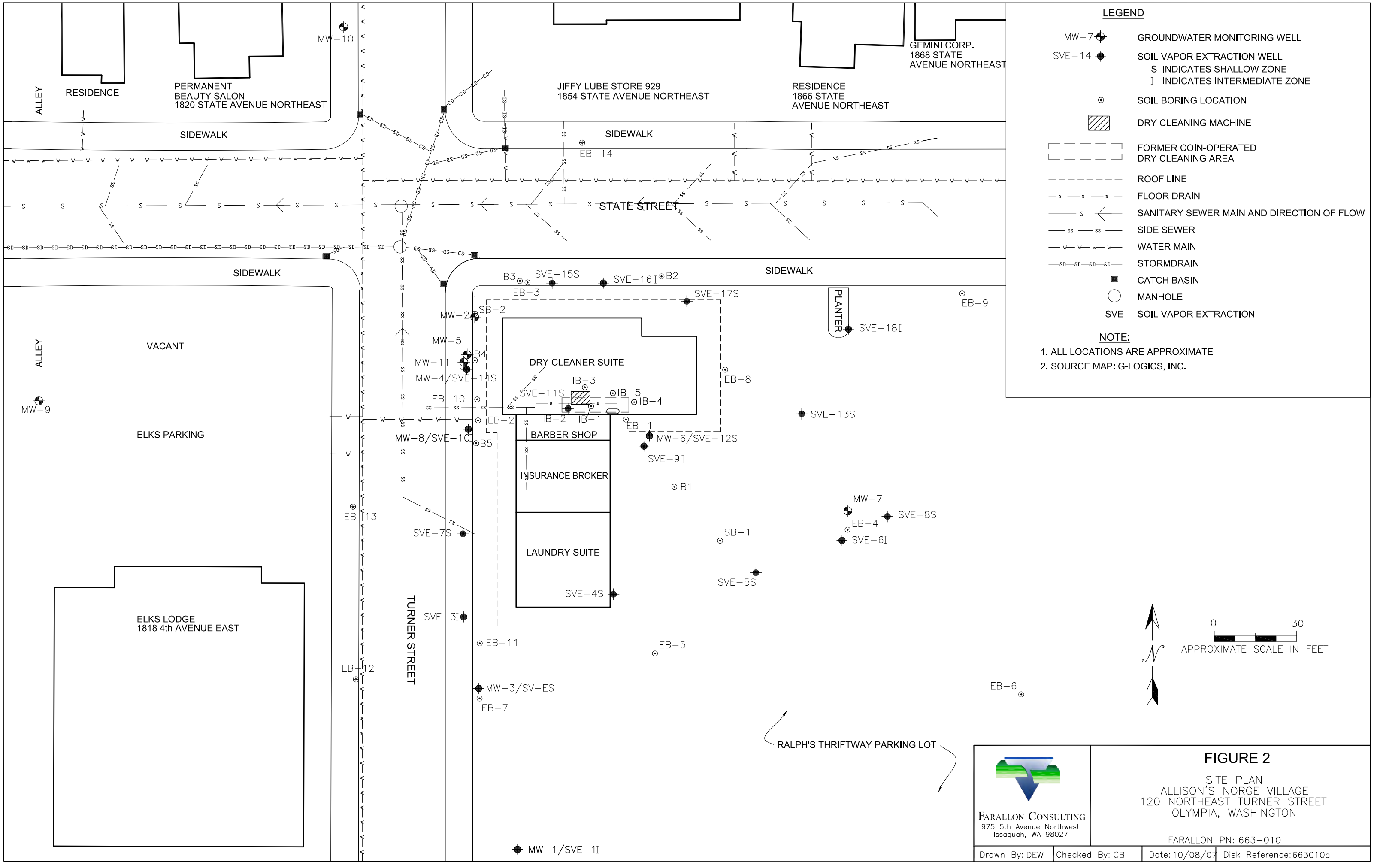

LEGEND

- MW-7 — GROUNDWATER MONITORING WELL
- SVE-14 — SOIL VAPOR EXTRACTION WELL
  - S INDICATES SHALLOW ZONE
  - I INDICATES INTERMEDIATE ZONE
- SOIL BORING LOCATION
- DRY CLEANING MACHINE
- FORMER COIN-OPERATED DRY CLEANING AREA
- ROOF LINE
- FLOOR DRAIN
- SANITARY SEWER MAIN AND DIRECTION OF FLOW
- SIDE SEWER
- WATER MAIN
- STORMDRAIN
- CATCH BASIN
- MANHOLE
- SVE — SOIL VAPOR EXTRACTION

NOTE:

1. ALL LOCATIONS ARE APPROXIMATE
2. SOURCE MAP: G-LOGICS, INC.

FARALLON CONSULTING
975 5th Avenue Northwest
Issaquah, WA 98027

FIGURE 2

SITE PLAN
ALLISON'S NORGE VILLAGE
120 NORTHEAST TURNER STREET
OLYMPIA, WASHINGTON

FARALLON PN: 663-010

Drawn By: DEW	Checked By: CB	Date: 10/08/07	Disk Reference: 663010a

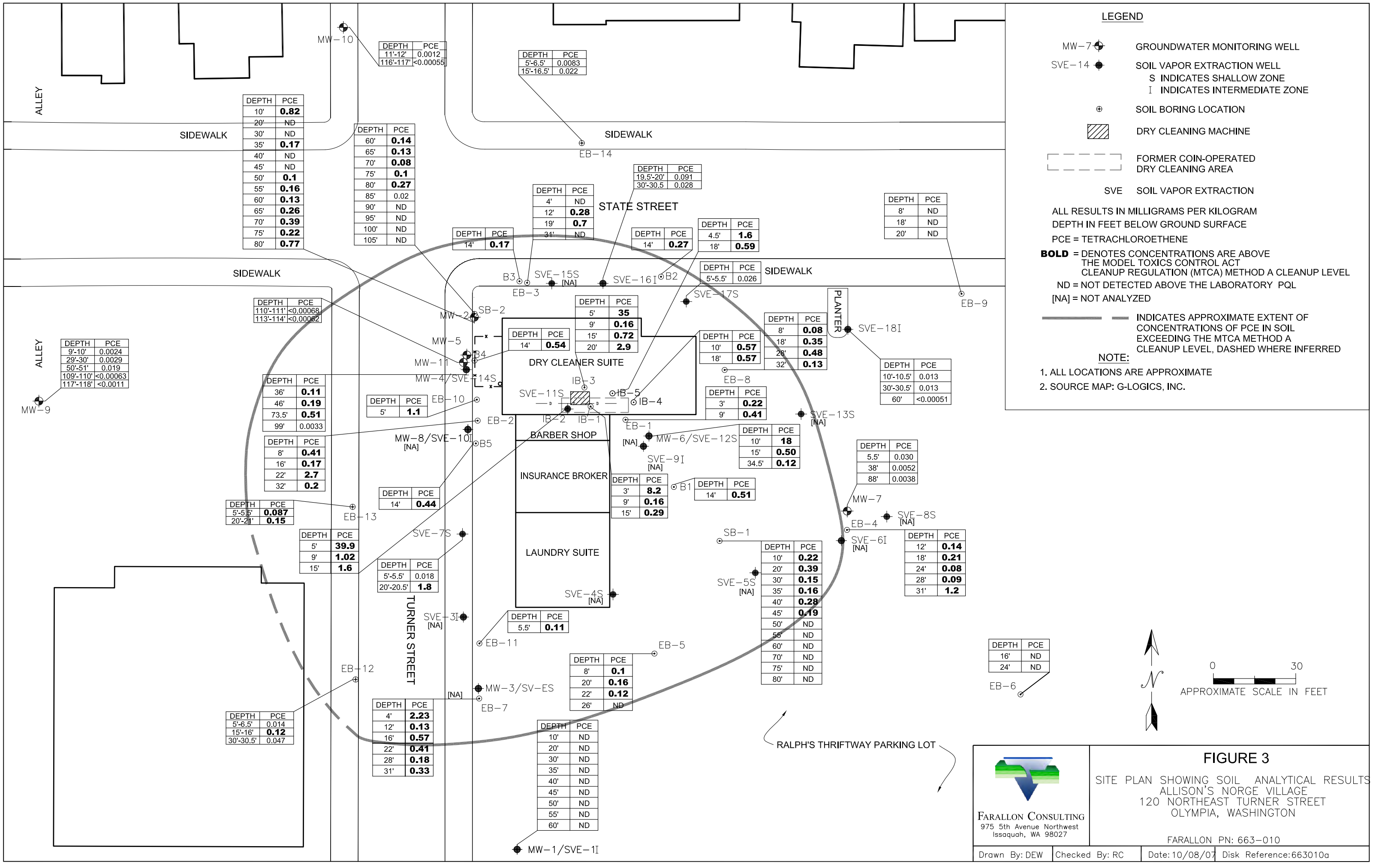

FARALLON CONSULTING
975 5th Avenue Northwest
Issaquah, WA 98027

FIGURE 3

SITE PLAN SHOWING SOIL ANALYTICAL RESULTS
ALLISON'S NORGE VILLAGE
120 NORTHEAST TURNER STREET
OLYMPIA, WASHINGTON

FARALLON PN: 663-010

Drawn By: DEW	Checked By: RC	Date: 10/08/07	Disk Reference: 663010a

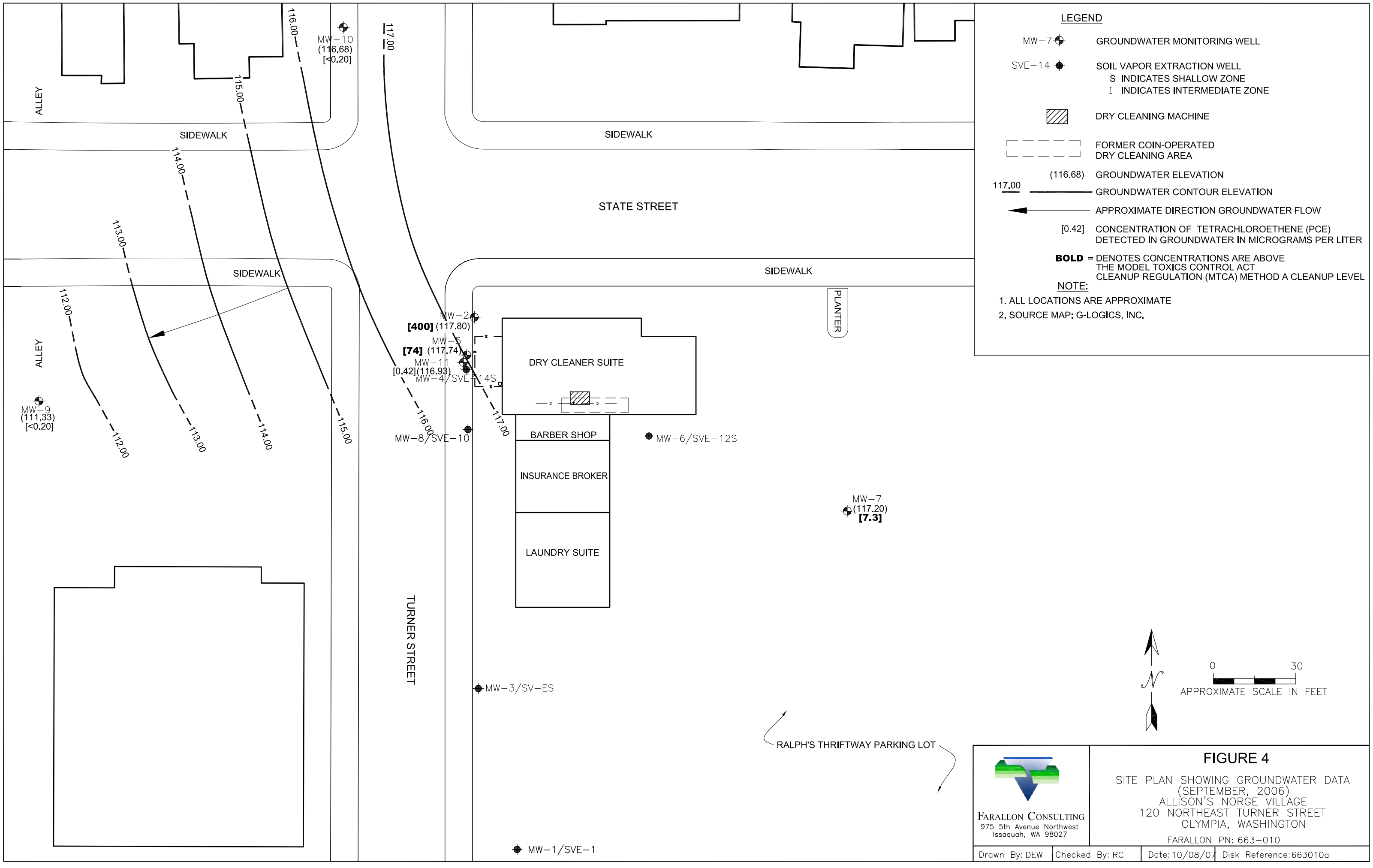

FIGURE 4

SITE PLAN SHOWING GROUNDWATER DATA (SEPTEMBER, 2006)
ALLISON'S NORGE VILLAGE
120 NORTHEAST TURNER STREET
OLYMPIA, WASHINGTON

FARALLON PN: 663-010

FARALLON CONSULTING
975 5th Avenue Northwest
Issaquah, WA 98027

Drawn By: DEW	Checked By: RC	Date: 10/08/07	Disk Reference: 663010a

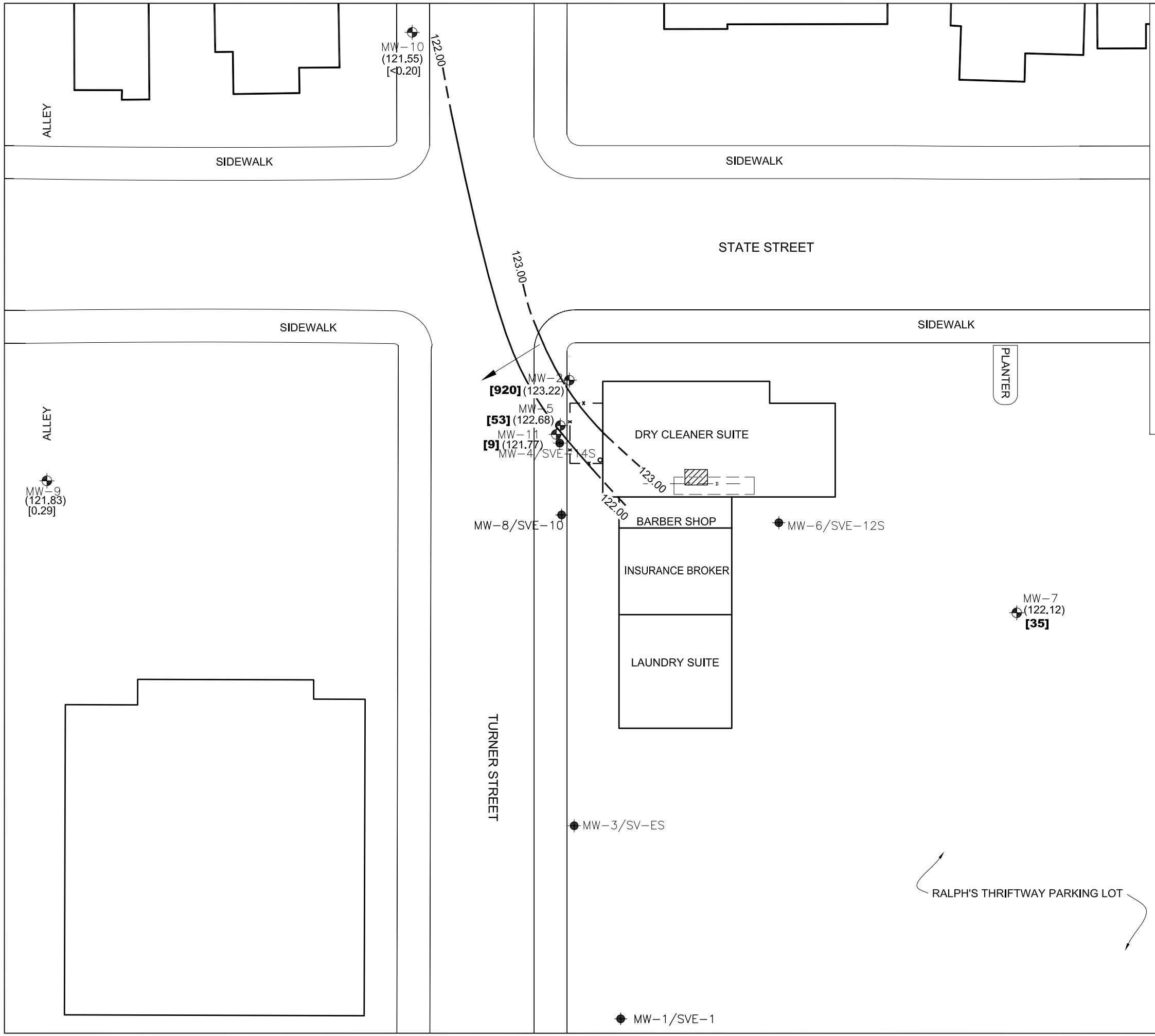

LEGEND

- MW-7 — GROUNDWATER MONITORING WELL
- SVE-14 — SOIL VAPOR EXTRACTION WELL
  - S INDICATES SHALLOW ZONE
  - I INDICATES INTERMEDIATE ZONE
- SOIL BORING LOCATION
- DRY CLEANING MACHINE
- FORMER COIN-OPERATED DRY CLEANING AREA
- (121.55) — GROUNDWATER ELEVATION
- 122.00 — GROUNDWATER CONTOUR ELEVATION
- APPROXIMATE DIRECTION GROUNDWATER FLOW
- [0.29] — CONCENTRATION OF TETRACHLOROETHENE (PCE) DETECTED IN GROUNDWATER IN MICROGRAMS PER LITER
- **BOLD** = DENOTES CONCENTRATIONS ARE ABOVE THE MODEL TOXICS CONTROL ACT CLEANUP REGULATION (MTCA) METHOD A CLEANUP LEVEL

NOTE:

1. ALL LOCATIONS ARE APPROXIMATE
2. SOURCE MAP: G-LOGICS, INC.

0 30

APPROXIMATE SCALE IN FEET

FARALLON CONSULTING
975 5th Avenue Northwest
Issaquah, WA 98027

FIGURE 5

SITE PLAN SHOWING GROUNDWATER DATA
(JULY, 2007)
ALLISON'S NORGE VILLAGE
120 NORTHEAST TURNER STREET
OLYMPIA, WASHINGTON

FARALLON PN: 663-010

Drawn By: DEW	Checked By: RC	Date: 10/08/07	Disk Reference: 663010a

TABLES

CLEANUP ACTION PROGRESS REPORT
AUGUST 2006 TO AUGUST 2007
Allison's Norge Village (AKA Eastside Laundry)
120 Northeast Turner Street
Olympia, Washington
VCP # SW 0370

Farallon PN: 663-010

Table 1
Well Construction Summary
Allison's Norge Village
Olympia, Washington
Farallon PN: 663-010

Well Identification	Date Installed	Casing Elevation (feet)[1]	Total Well Depth (feet)[2]	Casing Diameter (inches)	Depth of Screened Interval (feet)[2]
Deep Zone Monitoring Wells					
MW-2	8/22/2001	199.6	95.16	2.0	80-105
MW-5	12/10/2005	199.77	97.69	2.0	85-100
MW-7	12/14/2005	201.88	97.51	2.0	85-100
MW-9	8/24/2006	197.73	116.5	2.0	111.5-116.5
MW-10	8/25/2006	199.18	114	2.0	109-114
MW-11	8/22/2006	199.55	116	2.0	110-115
Shallow Zone SVE Wells					
SVE-2S (MW-3)	12/8/2004	—	19.79	4	4-20
SVE-4S	9/14/2006	—	20.00	4	3-20
SVE-5S	9/14/2006	—	20.00	4	3-20
SVE-7S	9/15/2006	—	20.00	4	3-20
SVE-8S	9/14/2006	—	20.00	4	3-20
SVE-11S		—	20.00	4	3-20
SVE-12S (MW-6)	12/8/2004	—	24.30	4	7.5-12.5
SVE-13S	9/20/2006	—	20.00	4	3-20
SVE-14S (MW-4)	12/8/2004	—	12.81	4	8-24
SVE-15S	9/18/2006	—	20.00	4	3-20
SVE-17S	9/18/2006	—	20.00	4	3-20
Intermediate Zone SVE Wells					
SVE-1I (MW-1)	8/2/2004	200.46	60.44	2	50-60
SVE-3I	9/15/2006	—	60.00	4	25-60
SVE-6I	9/19/2006	—	60.00	4	25-60
SVE-9I	9/15/2006	—	60.00	4	25-60
SVE-10I (MW-8)	6/22/2005	—	60.55	4	35-60
SVE-16I	9/18/2006	—	60.00	4	25-60
SVE-18I	9/19/2006	—	60.00	4	25-60

NOTES:

[1]Elevation of top of casing using relative datum of 200 feet. Surveyed Elevations by PLS

[2]Depth below top of well casing

[3]Elevation in feet relative to survey datum

— = casing elevation not surveyed

SVE = soil vapor extraction

Table 2
Groundwater Elevation Data Summary
Allison's Norge Village
Olympia, Washington
Farallon PN: 663-010

Well Identification	Date Measured	Casing Elevation (feet)[1]	Total Well Depth (feet)[2]	Depth to Groundwater (feet)[2]	Potentiometric Surface (feet)[3]
MW-1	8/1/2001	200.46	60.43	53.4	147.06
	8/24/2001			59.1	141.36
	12/23/2004			59.36	141.10
	1/26/2005			59.34	141.12
	6/23/2005			59.06	141.40
	9/16/2006			NE	NC
	7/10/2007			58.73	141.73
MW-2	8/24/2001	199.60	96.85	84.50	115.10
	12/23/2004			86.35	113.25
	1/26/2005			85.40	114.20
	6/23/2005			76.95	122.65
	9/16/2006			81.80	117.80
	7/10/2007			76.38	123.22
MW-3	12/23/2004	—	19.79	NE	NC
	1/26/2005			NE	NC
	6/23/2005			NE	NC
	9/16/2006			NE	NC
	7/10/2007			NE	NC
MW-4	12/23/2004	—	24.30	NE	NC
	1/26/2005			NE	NC
	6/23/2005			NE	NC
	9/16/2006			NE	NC
	7/10/2007			NE	NC
MW-5	12/23/2004	199.77	100.25	86.10	113.67
	1/26/2005			85.21	114.56
	6/23/2005			77.47	122.30
	9/16/2006			82.03	117.74
	7/10/2007			77.09	122.68
MW-6	12/23/2004	—	12.81	NE	NC
	1/26/2005			NE	NC
	6/23/2005			NE	NC
	9/16/2006			12.76	NC
	7/10/2007			12.73	NC
MW-7	12/23/2004	201.88	98.60	88.73	113.15
	1/26/2005			87.91	113.97
	6/23/2005			80.22	121.66
	9/16/2006			84.68	117.20
	7/10/2007			79.76	122.12
MW-8	6/23/2005	—	60.55	NE	NC
	9/16/2006			59.86	NC
	7/10/2007			59.92	NC
MW-9	9/16/2006	197.73	115.91	86.40	111.33
	7/10/2007			75.90	121.83
MW-10	9/16/2006	199.18	114.00	82.50	116.68
	7/10/2007			77.63	121.55
MW-11	9/16/2006	199.55	115.04	82.62	116.93
	7/10/2007			77.78	121.77

NOTES:

[1]Elevation of top of casing using relative datum of 200 feet. Surveyed Elevations by PLS

[2]Depth below top of well casing.

[3]Elevation in feet relative to survey datum.

— = casing elevation not surveyed

NE = not encountered

NC = not calculated

Table 3
Summary of Soil Analytical Results
Allison's Norge Village
Olympia, Washington
Farallon PN: 663-010

Location Identification	Sample Identification	Date Sampled	Depth (feet)[1]	Analytical Results (milligrams per kilogram)				
				PCE[2]	TCE[2]	cis-1,2-Dichloroethene[2]	trans-1,2-Dichloroethene[2]	Vinyl Chloride[2]
MW-9	MW9-9-10	8/23/2006	9-10	0.0024	<0.0009	<0.0009	<0.0009	<0.0009
MW-9	MW9-29-30	8/23/2006	29-30	0.0029	<0.00075	<0.00075	<0.00075	<0.00075
MW-9	MW9-50-51	8/23/2006	50-51	0.019	<0.00088	<0.00088	<0.00088	<0.00088
MW-9	MW9-109-110	8/23/2006	109-110	<0.00063	<0.00063	<0.00063	<0.00063	<0.00063
MW-9	MW9-117-118	8/24/2006	117-118	<0.0011	<0.0011	<0.0011	<0.0011	<0.0011
MW-10	MW10-11-12	8/24/2006	11-12	0.0012	<0.0006	<0.0006	<0.0006	<0.0006
MW-10	MW10-116-117	8/25/2006	116-117	<0.00055		<0.00055	<0.00055	<0.00055
MW-11	MW11-110-111	8/22/2006	110-111	<0.00068	<0.00068	<0.00068	<0.00068	<0.00068
MW-11	MW11-113-114	8/22/2006	113-114	<0.00062	<0.00062	<0.00062	<0.00062	<0.00062
EB-12	EB12-5-6.5	8/31/2006	5-6.5	0.014	<0.001	<0.001	<0.001	<0.001
EB-12	EB12-15-16	8/31/2006	15-16	**0.12**	<0.001	<0.001	<0.001	<0.001
EB-12	EB12-30-30.5	8/31/2006	30-30.5	0.047	<0.001	<0.001	<0.001	<0.001
EB-13	EB13-5-5.5	8/31/2006	5-5.5	**0.087**	<0.0013	<0.0013	<0.0013	<0.0013
EB-13	EB13-20-21	8/31/2006	20-21	**0.15**	<0.001	<0.001	<0.001	<0.001
EB-14	EB14-5-6.5	8/31/2006	5-6.5	0.0083	<0.001	<0.001	<0.001	<0.001
EB-14	EB14-15-16.5	8/31/2006	15-16.5	0.022	<0.001	<0.001	<0.001	<0.001
SVE-18I	SVE-18I-10.0-10.5	9/19/2006	10.0-10.5	0.013	<0.00066	<0.00066	<0.00066	<0.0033
SVE-18I	SVE-18I-30.0-30.5	9/19/2006	30.0-30.5	0.013	<0.00054	<0.00054	<0.00054	<0.0027
SVE-18I	SVE-18I-60.0	9/19/2006	60.0	<0.00051	<0.00051	<0.00051	<0.00051	<0.0026
SVE-16I	SVE-16I-19.5-20.0	9/18/2006	19.5-20.0	0.091	<0.00059	<0.00059	<0.00059	<0.0030
SVE-16I	SVE-16I-30.0-30.5	9/18/2006	30.0-30.5	0.028	<0.00064	<0.00064	<0.00064	<0.0032
SVE-17S	SVE-17S-5.0-5.5	9/18/2006	5.0-5.5	0.026	<0.00071	<0.00071	<0.00071	<0.0035
SVE-7S	SVE-7S-5.0-5.5	9/15/2006	5.0-5.5	0.018	<0.00069	<0.00069	<0.00069	<0.0034
SVE-7S	SVE-7S-20.0-20.5	9/15/2006	20.0-20.5	**1.8**	0.00083	<0.00062	<0.00062	<0.0031
MTCA Cleanup Levels for Soil				**0.05**[3]	**0.03**[3]	**800**[4]	**1,600**[4]	**240**[4]

NOTE:

Results in **BOLD** denote concentrations are above MTCA cleanup levels.

< denotes concentration is less than the laboratory practical quantitation limit (PQL) indicated.

[1]Depth in feet below ground surface.

[2]Analyzed by U.S. Environmental Protection Agency Method 8260B.

[3]Washington State Department of Ecology Model Toxics Control Act Cleanup Regulation (MTCA) Method A Soil Cleanup Level, Chapter 173-340 of the Washington Administrative Code, as amended February 2001.

[4]MTCA Cleanup Levels and Risk Calculations (CLARC) Method B Soil Cleanup Level, Version 3.1, updated November 2001.

Farallon = Farallon Consulting, L.L.C.

HVOCs = halogenated volatile organic compounds

PCE = tetrachloroethene

TCE = trichloroethene

Table 4
Summary of Groundwater Analytical Results
Allison's Norge Village
Olympia, Washington
Farallon PN: 663-010

Monitoring Well	Date Sampled	Sampled By	Screened Zone (feet)[1]	Analytical Results (micrograms per liter)[2]				
				PCE	TCE	cis-1,2-Dichloroethene	trans-1,2-Dichloroethene	Vinyl Chloride
MW-1	8/7/2001	G-Logics	50'-60'	**480**	ND	ND	ND	ND
	8/24/2001	G-Logics		**84**	ND	ND	ND	ND
	12/14/2004	Farallon		**170**	< 1.0	< 1.0	< 1.0	< 1.0
MW-2	8/24/2001	G-Logics	80'-105'	**11**	ND	ND	ND	ND
	8/24/2001[3]	G-Logics		**12**	ND	ND	ND	ND
	12/23/2004	Farallon		**27**	< 0.20	< 0.20	< 0.20	< 0.20
	9/17/2006	Farallon		**400**	<2.0	<2.0	<2.0	<2.0
	7/10/2007	Farallon		**920**	<4.0	<4.0	<4.0	<4.0
MW-5	12/14/2004	Farallon	85'-100'	**56**	< 0.40	< 0.40	< 0.40	< 0.40
	9/17/2006	Farallon		**74**	<0.40	<0.40	<0.40	<0.40
	7/10/2007	Farallon		**53**	<0.40	<0.40	<0.40	<0.40
MW-7	12/14/2004	Farallon	85'-100'	**7.0**	< 0.20	< 0.20	< 0.20	< 0.20
	9/17/2006	Farallon		**7.3**	<0.20	<0.20	<0.20	<0.20
	7/10/2007	Farallon		**35**	<0.20	<0.20	<0.20	<0.20
MW-9	9/16/2006	Farallon	111.5-116.5	<0.20	<0.20	<0.20	<0.20	<0.20
	7/10/2007	Farallon		0.29	<0.20	<0.20	<0.20	<0.20
MW-10	9/16/2006	Farallon	109-114	<0.20	<0.20	<0.20	<0.20	<0.20
	7/10/2007	Farallon		<0.20	<0.20	<0.20	<0.20	<0.20
MW-11	9/16/2006	Farallon	110-115	0.42	<0.20	<0.20	<0.20	<0.20
	7/10/2007	Farallon		9	<0.20	<0.20	<0.20	<0.20
MTCA Cleanup Levels for Groundwater				**5**[4]	**5**[4]	**80**[5]	**160**[5]	**0.2**[4]

NOTES:

[1]Depth in feet below ground surface.

[2]Analyzed by U.S. Environmental Protection Agency Method 8260B.

[3]Duplicate sample.

[4]Washington State Department of Ecology Model Toxics Control Act Cleanup Regulation (MTCA) Method A Groundwater Cleanup Level, Chapter 173-340 of the Washington Administrative Code, as amended February 2001.

[5]MTCA Cleanup Levels and Risk Calculations Standard Method B Formula Values, Version 3.1, updated November 2001.

Results in **BOLD** denote concentrations above the MTCA cleanup levels.

< denotes concentration is less than the laboratory practical quantitation limit (PQL) indicated.

Farallon = Farallon Consulting, L.L.C.

ND = analyte not detected above the PQL

PCE = tetrachloroethene

TCE = trichloroethene

Table 5
Summary of Soil Analytical Results for Waste Disposal
Allison's Norge Village
Olympia, Washington
Farallon PN: 663-010

Box	Date Sampled	Analytical Results (milligrams per kilogram)[1]				
		PCE	TCE	cis-1,2-Dichloroethene	trans-1,2-Dichloroethene	Vinyl Chloride
IDW-SP-04	9/15/2006	0.051	<0.00064	<0.00064	<0.00064	<0.0032
IDW-SP-05	9/20/2006	0.035	<0.0011	<0.0011	<0.0011	<0.0056
IDW-SP-06	9/20/2006	0.056	<0.0011	<0.0011	<0.0011	<0.0054
IDW-SP-07	9/20/2006	0.035	<0.0011	<0.0011	<0.0011	<0.0056
BOX-7224-1	12/5/2006	0.07	<0.0016	<0.0016	<0.0016	<0.0078
BOX-7224-2	12/5/2006	0.077	<0.0014	<0.0014	<0.0014	<0.0071
BOX-7116-1	12/6/2006	0.36	<0.0013	<0.0013	<0.0013	<0.0065
BOX-7116-2	12/6/2006	0.18	<0.0012	<0.0012	<0.0012	<0.0061
BOX-7079-1	12/6/2006	0.37	<0.0015	<0.0015	<0.0015	<0.0073
BOX-7079-2	12/6/2006	0.62	<0.0012	<0.0012	<0.0012	<0.0060
BOX-7065-1	12/7/2006	0.82	<0.0013	<0.0013	<0.0013	<0.0065
BOX-7065-2	12/7/2006	0.41	<0.0012	<0.0012	<0.0012	<0.0059
BOX-8527-1	12/8/2006	0.95	<0.00096	<0.00096	<0.00096	<0.0048
BOX-8527-2	12/8/2006	1.7	<0.0010	<0.0010	<0.0010	<0.0050
BOX-7180-1	12/8/2006	0.023	<0.00089	<0.00089	<0.00089	<0.0044
BOX-7180-2	12/8/2006	0.016	<0.00098	<0.00098	<0.00098	<0.0049
BOX-910213-1	12/18/2006	<0.047	<0.047	<0.047	<0.047	<0.047
BOX-910213-2	12/18/2006	<0.058	<0.058	<0.058	<0.058	<0.058
BOX-910212-1	12/19/2006	0.15	<0.00097	<0.00097	<0.00097	<0.00097
BOX-910212-2	12/19/2006	0.38	<0.0011	<0.0011	<0.0011	<0.0011
BOX-910204-1	12/19/2006	0.081	<0.0011	<0.0011	<0.0011	<0.0011
BOX-910204-2	12/19/2006	0.42	<0.0010	<0.0010	<0.0010	<0.0010
BOX-910201-1	12/19/2006	0.23	<0.050	<0.050	<0.050	<0.050
S	12/19/2006	0.19	<0.0010	<0.0010	<0.0010	<0.0010
MTCA Method B Cleanup Levels for Direct Contact [2]		1.9	2.5	800	1,600	0.67

NOTES:

Results in **BOLD** denote concentrations above the MTCA cleanup levels.

< denotes concentration is less than the laboratory practical quantitation limit (PQL) indicated.

[1]Analyzed by Environmental Protection Agency Method 8260B.

[2]Model Toxics Control Act Cleanup Regulation (MTCA) Cleanup Levels and Risk Calculations (CLARC) Method B Soil Cleanup Level, Version 3.1, updated November 2001.

Farallon = Farallon Consulting, L.L.C.

PCE = tetrachloroethene

TCE = trichloroethene

Table 6
Summary of Soil Vapor Extraction System Operation
Allison's Norge Village
Olympia, Washington
Farallon PN: 663-010

Well Identification	Date	System Vacuum (IOW)	Vacuum at Well (IOW)	Flow Rate Pitot Tube Reading	Flow Rate (CFM)	PCE - Tube Concentration (ppmv)	PCE - Tube Concentration (mg/m^3)	Amount PCE Removed (mg/min)	Amount PCE Removed Between Testing (lbs)	Total Amount PCE Removed to Date (lbs)	Comments
SVE-1I	4/4/2007 (avg)	25	0.00	0.00	0.00	3.10	21.36	--	--	--	
SVE-2S	4/4/2007 (avg)	25	12.00	0.32	33.50	31.25	215.31	--	--	--	
SVE-3I	4/4/2007 (avg)	25	15.13	0.56	30.19	71.00	489.19	--	--	--	Lab Data: Air-3I = 190 µg/l
SVE-4S	4/4/2007 (avg)	25	14.00	0.51	29.01	111.50	768.24	--	--	--	
SVE-5S	4/4/2007 (avg)	25	7.25	0.48	29.61	41.50	285.94	--	--	--	
SVE-6I	4/4/2007 (avg)	25	7.75	0.01	26.69	15.50	106.80	--	--	--	
SVE-7S	4/4/2007 (avg)	25	16.00	0.59	31.33	225.00	1550.25	--	--	--	Lab Data: Air-7S = 380 µg/l
SVE-8S	4/4/2007 (avg)	25	6.00	0.43	27.14	7.50	51.68	--	--	--	
SVE-9I	4/4/2007 (avg)	25	10.75	0.41	23.69	107.50	740.68	--	--	--	
SVE-10I	4/4/2007 (avg)	25	18.50	0.44	25.12	120.50	830.25	--	--	--	
SVE-11S	4/4/2007 (avg)	25	19.38	0.00	16.00	400.00	2756.00	--	--	--	Lab Data: Air-11S = 700 µg/l
SVE-11H	4/4/2007 (avg)	25	0.00	0.00	17.00	159.00	1095.51	--	--	--	
SVE-12S	4/4/2007 (avg)	25	13.00	0.33	23.69	237.50	1636.38	--	--	--	Lab Data: Air-12S = 190 µg/l
SVE-13S	4/4/2007 (avg)	25	9.25	0.48	30.19	37.50	258.38	--	--	--	
SVE-14S	4/4/2007 (avg)	25	13.25	1.59	45.10	160.00	1102.40	--	--	--	
SVE-15S	4/4/2007 (avg)	25	11.25	1.08	44.30	89.00	613.21	--	--	--	
SVE-16I	4/4/2007 (avg)	25	10.50	0.66	32.97	36.00	248.04	--	--	--	Lab Data: Air-16I = 100 µg/l
SVE-17S	4/4/2007 (avg)	25	11.38	0.67	34.02	40.50	279.05	--	--	--	
SVE-18I	4/4/2007 (avg)	25	10.88	0.00	0.00	5.75	39.62	--	--	--	Lab Data: Total SVE System, PCE = 37 µg/l

Table 6
Summary of Soil Vapor Extraction System Operation
Allison's Norge Village
Olympia, Washington
Farallon PN: 663-010

Well Identification	Date	System Vacuum (IOW)	Vacuum at Well (IOW)	Flow Rate Pitot Tube Reading	Flow Rate (CFM)	PCE - Tube Concentration (ppmv)	PCE - Tube Concentration (mg/m^3)	Amount PCE Removed (mg/min)	Amount PCE Removed Between Testing (lbs)	Total Amount PCE Removed to Date (lbs)	Comments
SVE-1I	4/11/2007	25	--	--	--	--	--	--	0	0	Well Not Operating
SVE-2S	4/11/2007	25	--	--	--	--	--	--	0	0	Well Not Operating
SVE-3I	4/11/2007	25	--	0 43	38.32	4.5	31 0	282.43	6 28	6.28	
SVE-4S	4/11/2007	25	--	0.49	41.45	3	20.7	463.31	10 30	10.30	
SVE-5S	4/11/2007	25	--	--	--	--	--	--	0	0	Well Not Operating
SVE-6I	4/11/2007	25	--	0 18	25 12	8	55 1	57 63	1.28	1 28	Estimated PCE removal based on 4/4/2007 and 5/11/2007 values
SVE-7S	4/11/2007	25	--	0.44	39.28	17	117 1	927.95	20 62	20.62	Lab Data: Air-7S = 42 µg/l
SVE-8S	4/11/2007	25	--	--	--	--	--	--	0	0	Well Not Operating
SVE-9I	4/11/2007	25	--	0 3	32 43	7	48.2	362 48	8.06	8 06	
SVE-10I	4/11/2007	25	--	0 27	30.77	3.5	24 1	372 47	8.28	8 28	
SVE-11S	4/11/2007	25	0	--	--	--	--	--	0	0	No flow upon arrival. Lab Data: Air-11S = 190 µg/l
SVE-11H	4/11/2007	25	0	--	--	--	--	--	0	0	No flow upon arrival, Lab Data: Air-11H = 59 µg/l
SVE-12S	4/11/2007	25	--	0 28	31.33	6.5	44 8	746 26	16.58	16 58	
SVE-13S	4/11/2007	25	--	--	--	--	--	--	0	0	Well Not Operating
SVE-14S	4/11/2007	25	--	1 05	60 7	18	124.0	1054.74	23 44	23.44	Lab Data: Air-14S = 38 µg/l
SVE-15S	4/11/2007	25	--	1 2	59.2	3.5	24 1	534 57	11.88	11 88	
SVE-16I	4/11/2007	25	--	0.59	45.5	4	27 6	177.67	3.95	3 95	Lab Data: Air-16I = 12 µg/l
SVE-17S	4/11/2007	25	--	--	--	--	--	--	0	0	Well Not Operating
SVE-18I	4/11/2007	25	--	0.14	22.16	--	--	24 88	0.55	0.55	Estimated PCE removal based on 4/4/2007 calculated average
TOTAL REMOVED THROUGH 4/11/2007 - FIRST WEEK OF OPERATION										**111.21**	Lab Data: Total SVE System Pre-Carbon, PCE = 40 µg/l. In between Carbon 1 and 2, PCE = <1.0 µg/l
SVE-1I	4/23/2007	32	--	--	--	--	--	--	0	0	Well Not Operating
SVE-2S	4/23/2007	32	--	--	--	--	--	--	0	0	Well Not Operating
SVE-3I	4/23/2007	32	--	1	59.2	5.7	39.3	58.95	2 25	8.52	
SVE-4S	4/23/2007	32	--	--	--	--	--	--	0	10.30	Well Not Operating
SVE-5S	4/23/2007	32	--	--	--	--	--	--	0	0	Well Not Operating
SVE-6I	4/23/2007	32	--	--	--	--	--	--	0	1 28	Well Not Operating
SVE-7S	4/23/2007	32	--	0.82	53.6	9	62 0	136 04	5.18	25.80	
SVE-8S	4/23/2007	32	--	--	--	--	--	--	0	0	Well Not Operating
SVE-9I	4/23/2007	32	--	0.64	47.4	9	62.0	74.03	2 82	10 88	
SVE-10I	4/23/2007	32	--	0.06	14 5	7 2	49 6	15 15	0.58	8.85	hard to get flow reading use to moisture
SVE-11S	4/23/2007	32	--	--	9.374	3	20.7	5.49	0	0	hot wire amp conversion
SVE-11H	4/23/2007	32	--	1.5	72.5	7 8	53 7	110.41	4 21	4.21	
SVE-12S	4/23/2007	32	--	0 22	27 77	4.5	31.0	24.40	0.54	17.13	moisture suspect - used 5/11 concentration to estimate removal amount
SVE-13S	4/23/2007	32	--	--	--	--	--	--	0	0	Well Not Operating
SVE-14S	4/23/2007	32	--	2 2	87 8	9	62 0	231 42	8.82	32.26	
SVE-15S	4/23/2007	32	--	0	0	2.8	19.3	0.00	0.00	11.88	Well not operating upon arrival, modified settings and collected sample
SVE-16I	4/23/2007	32	--	1.2	64.9	2 7	18 6	42.45	1 62	5 57	
SVE-17S	4/23/2007	32	--	--	--	--	--	--	0	0	Well Not Operating
SVE-18I	4/23/2007	32	--	--	--	--	--	--	0	0 55	Well Not Operating
TOTAL REMOVED THROUGH 4/23/2007 - FIRST TWO WEEKS OF OPERATION										**137.43**	Field Measurement: In between Carbon 1 and 2, PCE = 0.0 ppmv

Table 6
Summary of Soil Vapor Extraction System Operation
Allison's Norge Village
Olympia, Washington
Farallon PN: 663-010

Well Identification	Date	System Vacuum (IOW)	Vacuum at Well (IOW)	Flow Rate Pitot Tube Reading	Flow Rate (CFM)	PCE - Tube Concentration (ppmv)	PCE - Tube Concentration (mg/m^3)	Amount PCE Removed (mg/min)	Amount PCE Removed Between Testing (lbs)	Total Amount PCE Removed to Date (lbs)	Comments
SVE-1I	5/11/2007	26	--	--	0.65	1.6	11.0	--	0	0	Well not operating, activated for PCE reading only, not used in volume calculation
SVE-2S	5/11/2007	26	--	0.72	50.2	3.6	24.8	--	0	0	Well not operating, activated for PCE reading only, not used in volume calculation
SVE-3I	5/11/2007	26	--	0.67	48.5	0.5	3.4	29.35	1.68	10.20	
SVE-4S	5/11/2007	26	--	0.50	41.87	3.9	26.9	--	0	10.30	Well not operating, activated for PCE reading only. not used in volume calculation
SVE-5S	5/11/2007	26	--	0.52	42.7	3.6	24.8	--	0	0	Well not operating, activated for PCE reading only. not used in volume calculation
SVE-6I	5/11/2007	26	--	0.24	29.01	0.5	3.4	--	0	1.28	Well not operating, activated for PCE reading only. not used in volume calculation
SVE-7S	5/11/2007	26	--	0.56	44.3	4.9	33.8	60.11	3.43	29.24	
SVE-8S	5/11/2007	26	--	0.49	41.45	1.5	10.3	--	0	0	Well not operating. activated for PCE reading only, not used in volume calculation
SVE-9I	5/11/2007	26	--	0.08	16.75	3.6	24.8	20.60	1.18	12.05	Pitot tube gets wet
SVE-10I	5/11/2007	26	--	0.36	35.53	6.0	41.3	45.78	2.62	11.47	
SVE-11S	5/11/2007	26	--	--	8.61	10.0	68.9	10.93	0.62	0.83	hot wire amp conversion
SVE-11H	5/11/2007	26	--	0.95	57.7	2.0	13.8	55.20	3.15	7.36	
SVE-12S	5/11/2007	26	--	0.42	38.38	4.5	31.0	33.72	1.93	19.05	
SVE-13S	5/11/2007	26	--	0.61	46.2	1.0	6.9	--	0	0	Well not operating, activated for PCE reading only, not used in volume calculation
SVE-14S	5/11/2007	26	--	1.30	67.5	1.4	9.6	68.53	3.92	36.17	
SVE-15S	5/11/2007	26	--	1.30	67.5	1.5	10.3	28.33	1.62	13.50	
SVE-16I	5/11/2007	26	--	0.86	54.9	0.6	4.1	17.69	1.01	6.58	
SVE-17S	5/11/2007	26	--	0.77	52	0.6	4.1	--	0	0	Well not operating, activated for PCE reading only, not used in volume calculation
SVE-18I	5/11/2007	26	--	0.26	30.19	0.0	0.0	--	0	0.55	Well not operating. activated for PCE reading only, not used in volume calculation
TOTAL REMOVED THROUGH 5/11/2007 - FIRST FIVE WEEKS OF OPERATION										**158.6**	Field Measurement: Total SVE System Pre-Carbon, PCE = 2.0 ppmv. In between Carbon 1 and 2, PCE = 0.0 ppmv

Table 6
Summary of Soil Vapor Extraction System Operation
Allison's Norge Village
Olympia, Washington
Farallon PN: 663-010

Well Identification	Date	System Vacuum (IOW)	Vacuum at Well (IOW)	Flow Rate Pitot Tube Reading	Flow Rate (CFM)	PCE - Tube Concentration (ppmv)	PCE - Tube Concentration (mg/m^3)	Amount PCE Removed (mg/min)	Amount PCE Removed Between Testing (lbs)	Total Amount PCE Removed to Date (lbs)	Comments
SVE-1I	6/11/2007	24	--	--	0 87	3.5	24 1	--	0	0	Well not operating. activated for PCE reading only, not used in volume calculation
SVE-2S	6/11/2007	24	--	0.59	45.5	7.0	48.2	--	0	0	Well not operating, activated for PCE reading only. not used in volume calculation
SVE-3I	6/11/2007	24	--	0 51	42 3	12.0	82 7	51 62	5 08	15.28	
SVE-4S	6/11/2007	24	--	0.48	41 03	9 0	62 0	--	0	10 30	Well not operating, activated for PCE reading only, not used in volume calculation
SVE-5S	6/11/2007	24	--	0.44	39.28	9.0	62.0	--	0	0	Well not operating, activated for PCE reading only, not used in volume calculation
SVE-6I	6/11/2007	24	--	0.20	26.48	1.7	11.7	--	0	1.28	Well not operating, activated for PCE reading only, not used in volume calculation
SVE-7S	6/11/2007	24	--	0 67	48 5	16 0	110 2	98 95	9 74	38.98	
SVE-8S	6/11/2007	24	--	0.42	38 38	1 0	6.9	--	0	0	Well not operating, activated for PCE reading only, not used in volume calculation
SVE-9I	6/11/2007	24	--	0.36	35.53	14.0	96.5	61.04	6.01	18 06	
SVE-10I	6/11/2007	24	--	0 30	32 43	15.0	103 4	66.48	6 54	18.01	
SVE-11S	6/11/2007	24	--	--	6.54	25 0	172 3	22 35	2 20	3.03	hot wire amp conversion
SVE-11H	6/11/2007	24	--	0.91	56.5	13.0	89.6	82.73	8.14	15 50	
SVE-12S	6/11/2007	24	--	0 36	35 53	10.0	68 9	50.29	4 95	24 00	
SVE-13S	6/11/2007	24	--	0.50	41 87	3 0	20 7	--	0	0	Well not operating. activated for PCE reading only, not used in volume calculation
SVE-14S	6/11/2007	24	--	1 30	67.5	28.0	192.9	193.73	19.07	55.24	
SVE-15S	6/11/2007	24	--	1 20	64 9	4 0	27 6	34.85	3.43	16 93	
SVE-16I	6/11/2007	24	--	0.74	50.9	5 0	34 5	27 83	2 74	9.31	
SVE-17S	6/11/2007	24	--	0 70	49.5	2.0	13.8	--	0	0	Well not operating. activated for PCE reading only, not used in volume calculation
SVE-18I	6/11/2007	24	--	0.24	29 01	0 0	0.0	--	0	0 55	Well not operating, activated for PCE reading only, not used in volume calculation
TOTAL REMOVED THROUGH 6/11/2007 - FIRST TWO MONTHS OF OPERATION										**226.48**	Field Measurement: Total SVE System Pre-Carbon. PCE = 17 ppmv, In between Carbon 1 and 2, PCE - 8 ppmv

CFM = cubic feet per minute
IOW = inches of water
lb = pounds
mg/min = milligrams per minute
mg/m3 = milligrams per cubic meter
PCE = tetrachloroethene
ppmv = parts per million volume
µg/l = micrograms per liter

APPENDIX A
BORING/WELL CONSTRUCTION LOGS

CLEANUP ACTION PROGRESS REPORT
AUGUST 2006 TO AUGUST 2007
Allison's Norge Village (AKA Eastside Laundry)
120 Northeast Turner Street
Olympia, Washington
VCP # SW 0370

Farallon PN: 663-010

FARALLON CONSULTING
975 5th Avenue Northwest
Issaquah, WA 98027

USCS Classification and Graphic Legend

Major Divisions			USCS Graphic Symbol	USCS Letter Symbol	Lithologic Description
Coarse-Grained Soil (More than 50% of material is larger than No. 200 sieve size)	GRAVEL AND GRAVELLY SOIL (More than 50% of coarse fraction retained on No. 4 sieve)	CLEAN GRAVEL (Little or no fines)		GW	Well graded GRAVEL, well graded GRAVEL with sand
				GP	Poorly graded GRAVEL, GRAVEL with sand
		GRAVEL WITH FINES (Appreciable amount of fines)		GP-GM	Poorly graded GRAVEL - GRAVEL with sand and silt
				GM	Silty GRAVEL
				GC	Clayey GRAVEL
	SAND AND SANDY SOIL (More than 50% of coarse fraction passed through No. 4 sieve)	CLEAN SAND (Little or no fines)		SW	Well graded SAND
				SP	Poorly graded SAND
		SAND WITH FINES (Appreciable amount of fines)		SP-SM	Poorly graded SAND - silty SAND
				SM	Silty SAND
				SC	Clayey SAND
				SM-ML	SILT - Silty SAND
Fine-Grained Soil (More than 50% of material is smaller than No. 200 sieve size)	SILT AND CLAY (Liquid limit less than 50)			ML	SILT
				CL	CLAY
				OL	Organic SILT
	SILT AND CLAY (Liquid limit greater than 50)			MH	Inorganic SILT
				CH	Inorganic CLAY
				OH	Organic CLAY
		Highly Organic Soil		PT	Peat
OTHER MATERIALS	PAVEMENT			AC	Asphalt concrete
				CO	Concrete
	OTHER			RK	Bedrock
				WD	Wood Debris
				DB	Debris (Miscellaneous)
				PC	Portland cement

Legend

- Sample Interval
- G — Grab Sample Interval
- Water level at time of drilling
- Water level at time of sampling
- Blank Casing
- Screened Casing
- Cement Grout
- Bentonite
- Sand Pack
- Well Cap
- ——— Solid line indicates sharp contact between units well defined.
- - - - - - - Dashed line indicates gradational contact between units.

feet bgs = feet below ground surface
NE = Not Encountered
NA = Not Applicable
PID = Photoionization Detector
PN = Project Number
units = PID units calibrated to 100 ppm isobutylene
USCS = Unified Soil Classification System

FARALLON CONSULTING
975 5th Avenue Northwest
Issaquah, WA 98027

Log of Boring: EB-12

Client: Mr. W. Allison
Project: Allison's Norge Village
Location: Olympia, WA
Farallon PN: 663-010
Logged By: J. Schmitt

Date/Time Started:	8/31/2006; 1100	**Sampler Type:**	D&M 18" SS
Date/Time Completed:	8/31/2006; 1300	**Drive Hammer (lbs.):**	140
Equipment:	CME 175	**Depth of Water ATD (ft bgs):**	NE
Drilling Company:	Cascade Drilling	**Total Boring Depth (ft bgs):**	40
Drilling Foreman:	Steve	**Total Well Depth (ft bgs):**	NA
Drilling Method:	HSA		

Depth (feet bgs.)	Sample Interval	Lithologic Description	USCS	USGS Graphic	% Recovery	Blow Counts 8/8/8	PID (units)	Sample ID	Sample Analyzed	Boring/Well Construction Details
5		SILT with fine sand, brown, moist, no odor.	ML		75	20/29/39	NA	EB12-5-6.5 (1105)	X	
10		Silty sand/Sandy silt, brown, moist, no odor.	SM		100	43/40/50 for 2"	NA	EB12-10-11.5 (1109)		
15		SAND, fine, brown, moist, no odor.	SM		100	37/50 for 2"	NA	EB12-15-16 (1114)	X	
20		Same as above, In contact with SILT, trace fine sand, brown, moist, no odor.	ML		100	33/39/43	NA	EB12-20-21.5 (1120)		
25										

Well Construction Information

Monument Type: NA
Casing Diameter (inches): NA
Screen Slot Size (inches): NA
Screened Interval (ft bgs): NA
Filter Pack: NA
Surface Seal: NA
Annular Seal: NA
Ground Surface Elevation (ft): NA
Top of Casing Elevation (ft): NA
Boring Abandonment: Bentonite
Surveyed Location: X: NA Y: NA

FARALLON CONSULTING
975 5th Avenue Northwest
Issaquah, WA 98027

Log of Boring: EB-12

Depth (feet bgs.)	Sample Interval	Lithologic Description	USCS	USGS Graphic	% Recovery	Blow Counts 8/8/8	PID (ppm)	Sample ID	Sample Analyzed	Well Construction Details
25		Sampler on rock, overdrill, 6" recovery of disturbed sample. Silty GRAVEL, fine to coarse, minor fine to medium SAND, brown, moist, no odor.	GM		0	100 for 1"	NA	EB12-25-25.5 (1120)		
30		Silty GRAVEL, fine to coarse, minor fine to medium SAND, brown, moist, no odor.	GM		100	70 for 3"	NA	EB12-30-30.5 (1130)	X	
35		Rock in shoe, minimal recovery. Silty GRAVEL, fine to coarse, with cobbles, brown, moist, no odor.	GM		0	70 for 1"	NA	No Recovery		
40		Silty GRAVEL, fine to coarse, rounded, trace medium to coarse sand, brown, moist, no odor.	GM		0	80 for 3"	NA	EB12-40-40.5 (1158)		
45										

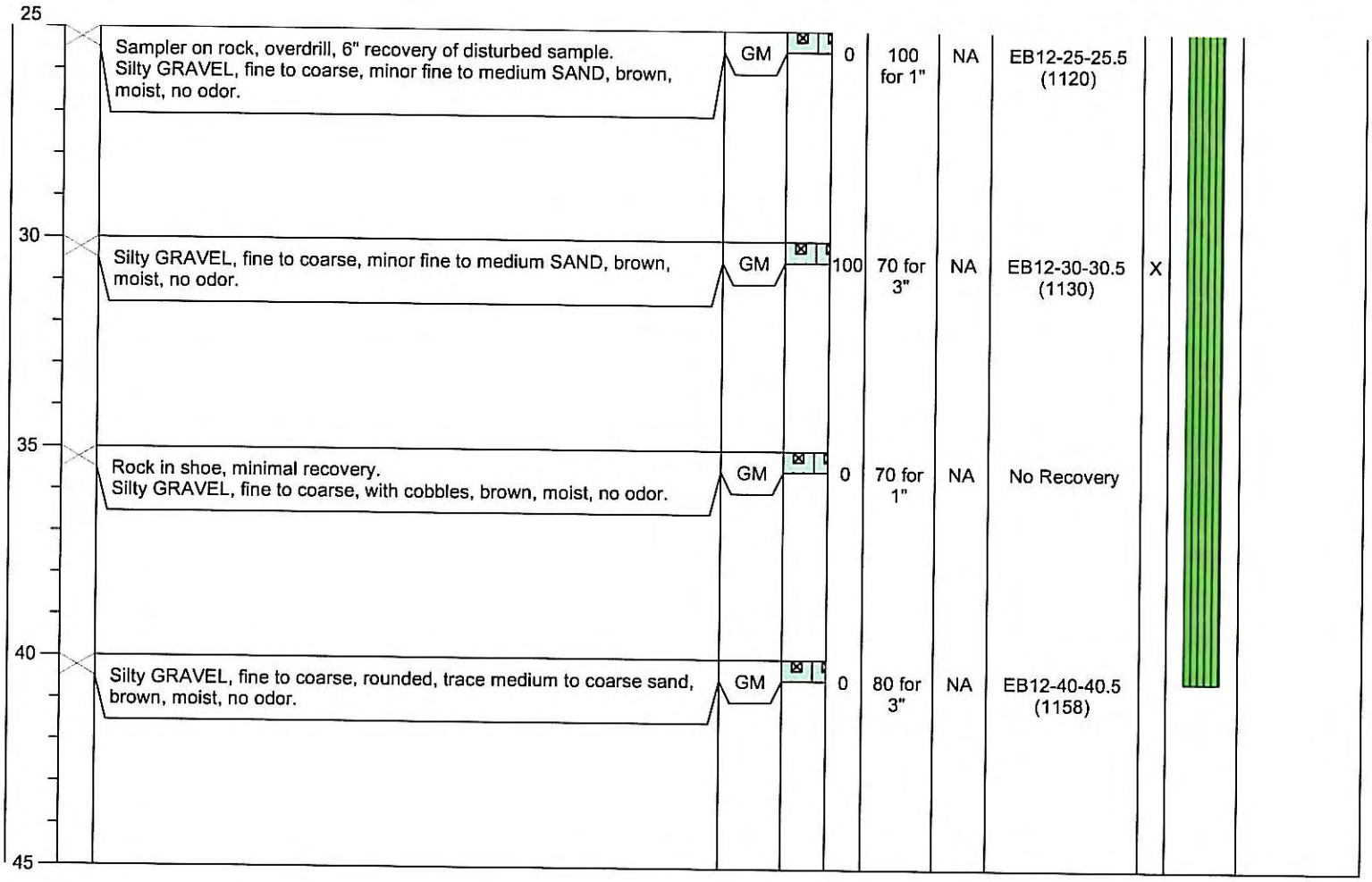

Well Construction Information

Monument Type: NA
Casing Diameter (inches): NA
Screen Slot Size (inches): NA
Screened Interval (ft bgs): NA

Filter Pack: NA
Surface Seal: NA
Annular Seal: NA

Ground Surface Elevation (ft): NA
Top of Casing Elevation (ft): NA
Boring Abandonment: Bentonite
Surveyed Location: X: NA Y: NA

FARALLON CONSULTING
975 5th Avenue Northwest
Issaquah, WA 98027

Log of Boring: EB-13

Client: Mr. W. Allison
Project: Allison's Norge Village
Location: Olympia, WA
Farallon PN: 663-010
Logged By: J. Schmitt

Date/Time Started:	8/31/2006; 0900	**Sampler Type:**	D&M 18" SS
Date/Time Completed:	8/31/2006; 1100	**Drive Hammer (lbs.):**	140
Equipment:	CME 175	**Depth of Water ATD (ft bgs):**	NE
Drilling Company:	Cascade Drilling	**Total Boring Depth (ft bgs):**	40
Drilling Foreman:	Steve	**Total Well Depth (ft bgs):**	NA
Drilling Method:	HSA		

Depth (feet bgs.)	Sample Interval	Lithologic Description	USCS	USGS Graphic	% Recovery	Blow Counts 8/8/8	PID (units)	Sample ID	Sample Analyzed	Boring/Well Construction Details
0										Concrete
5		Silty SAND, fine, intermixed light brown and dark brown with oranges.	SM		NA	60 for 6"	.8	EB13-5-5.5		
10		Silty SAND, fine to medium, light brown, moist, no odor.	SM		NA	29/30/36	1.4	EB13-10-11.5		
15		SAND, fine to medium, trace silt, brown, moist, no odor.	SP		NA	28/36/50	.9	EB13-15-16.5		
20										

Well Construction Information

Monument Type: NA
Casing Diameter (inches): NA
Screen Slot Size (inches): NA
Screened Interval (ft bgs): NA
Filter Pack: NA
Surface Seal: NA
Annular Seal: NA
Ground Surface Elevation (ft): NA
Top of Casing Elevation (ft): NA
Boring Abandonment: Bentonite
Surveyed Location: X: NA Y: NA

FARALLON CONSULTING
975 5th Avenue Northwest
Issaquah, WA 98027

Log of Boring: EB-13

Depth (feet bgs.)	Sample Interval	Lithologic Description	USCS	USGS Graphic	% Recovery	Blow Counts 8/8/8	PID (ppm)	Sample ID	Sample Analyzed	Well Construction Detailse
20		SAND, fine to medium, trace silt, litght brown, moist to very moist, no odor.	SP		100	36/50 for 5"	1.3	EB13-20-21		Bentonite chips
25		Same as above. In contact with SILT with gravel, minor medium sand, light brown, moist, no odor.	SP		100	41/50 for 6"	3.0	EB13-25-26		
30		Rock in shoe. No recovery.			NA	42/50 for 4"	NA	No Recovery		
35		SILT with fine sand and fine to coarse gravel, rounded, light brown, moist, no odor.	GM		NA	60 for 5"	2.1	EB13-35-35.5		
40		Silty GRAVEL, fine to coarse, with fine to medium sand, brown, moist, no odor.	GM		NA	40/50 for 4"	NA	No Recovery		

Well Construction Information

Monument Type: NA
Casing Diameter (inches): NA
Screen Slot Size (inches): NA
Screened Interval (ft bgs): NA

Filter Pack: NA
Surface Seal: NA
Annular Seal: NA

Ground Surface Elevation (ft): NA
Top of Casing Elevation (ft): NA
Boring Abandonment: Bentonite
Surveyed Location: X: NA Y: NA

FARALLON CONSULTING
975 5th Avenue Northwest
Issaquah, WA 98027

Log of Boring: EB-14

Client: Mr. W. Allison
Project: Allison's Norge Village
Location: Olympia, WA
Farallon PN: 663-010
Logged By: J. Schmitt

Date/Time Started:	8/31/2006; 1300	**Sampler Type:**	D&M 18" SS
Date/Time Completed:	8/31/2006; 1530	**Drive Hammer (lbs.):**	140
Equipment:	CME 175	**Depth of Water ATD (ft bgs):**	19'
Drilling Company:	Cascade Drilling	**Total Boring Depth (ft bgs):**	31'
Drilling Foreman:	Steve C.	**Total Well Depth (ft bgs):**	NA
Drilling Method:	HSA		

Depth (feet bgs.)	Sample Interval	Lithologic Description	USCS	USGS Graphic	% Recovery	Blow Counts 8/8/8	PID (units)	Sample ID	Sample Analyzed	Boring/Well Construction Details
0										Concrete
5		SILT with fine sand, light brown, moist, no odor.	ML		NA	29/30/36	NA	EB14-5-6.5		
10		Silty SAND, fine, light reddish brown, moist, no odor.	SM		NA	39/50 for 5"	NA	EB14-10-11		
15		Silty SAND, fine, light reddish brown, moist, no odor. CONTACT with fine SAND, trace silt, olive brown, moist, no odor.	SP-SM		NA	41/35/39	NA	EB15-15-16.5		
20										

Well Construction Information

Monument Type: NA
Casing Diameter (inches): NA
Screen Slot Size (inches): NA
Screened Interval (ft bgs): NA
Filter Pack: NA
Surface Seal: NA
Annular Seal: NA
Ground Surface Elevation (ft): NA
Top of Casing Elevation (ft): NA
Boring Abandonment: NA
Surveyed Location: X: NA Y: NA

FARALLON CONSULTING
975 5th Avenue Northwest
Issaquah, WA 98027

Log of Boring: EB-14

Depth (feet bgs.)	Sample Interval	Lithologic Description	USCS	USGS Graphic	% Recovery	Blow Counts 8/8/8	PID (ppm)	Sample ID	Sample Analyzed	Well Construction Details
20		SAND, fine to medium, trace silt, olive brown, wet, no odor.	SP		100	12/17/19	NA	EB14-20-21.5		Bentonite chips
								EB14-RGW-25		
25		Silty GRAVEL with sand, gravel is fine to coarse, rounded, sand is fine to medium, brown, wet, no odor.	GM		100	60 for 6"	NA	EB14-25-25.5		
		Same as above. Coarse gravel dominant, very moist to wet, not enough usable sample to retain.	GM		75	50 for 6"	NA	No Recovery		
30		Same as above.	GM		50	70 for 3"	NA	No Recovery		

Well Construction Information

Monument Type: NA
Casing Diameter (inches): NA
Screen Slot Size (inches): NA
Screened Interval (ft bgs): NA

Filter Pack: NA
Surface Seal: NA
Annular Seal: NA

Ground Surface Elevation (ft): NA
Top of Casing Elevation (ft): NA
Boring Abandonment: NA
Surveyed Location: X: NA Y: NA

FARALLON CONSULTING
975 5th Avenue Northwest
Issaquah, WA 98027

Log of Boring: MW-9

Client: Mr. W. Allison
Project: Allison's Norge Village
Location: Olympia, WA
Farallon PN: 663-010
Logged By: J. Schmitt

Date/Time Started:	8/23/06	**Sampler Type:**	NA
Date/Time Completed:	8/24/06; 1300	**Drive Hammer (lbs.):**	NA
Equipment:	Sonic 50K	**Depth of Water ATD (ft bgs):**	88
Drilling Company:	Cascade Drilling	**Total Boring Depth (ft bgs):**	131
Drilling Foreman:	Rodney	**Total Well Depth (ft bgs):**	116.5
Drilling Method:	Sonic		

Depth (feet bgs.)	Sample Interval	Lithologic Description	USCS	USGS Graphic	% Recovery	Blow Counts 8/8/8	PID (units)	Sample ID	Sample Analyzed	Boring/Well Construction Details
0		Silty SAND, fine, brown, moist, no odor, loose.	SM		50					
5		Sandy SILT, fine sand, brown, moist, no odor, loose.	ML		100		0.8	MW9-6-7 (0736)		
10		SAND, fine to medium, trace to minor silt, brown, moist, loose, no odor.	SP				1.0	MW9-9-10 (0740)		
15		No recovery.			0					
20		Silty SAND, fine to medium, with gravel, brown, moist, no odor.	SM		100		1.8	MW9-16-17 (0750)		
		SAND, fine to medium, with silt and fine to coarse gravel, brown, moist, no odor.	SP-SM				1.0	MW9-19-20 (0752)		
25		Silty SAND, fine, with fine to coarse gravel, brown, moist, no odor.	SM		100		1.1	MW9-25 (0804)		
30		Silty GRAVEL, fine to coarse, trace fine sand, olive brown, moist.	GP-GM				3.0	MW9-23-30 (0808)		
35							2.3	MW9-30-31 (0848)		
40							2.5	MW9-40-41 (0936)		
45							26	MW9-45-46 (0944)		
50		Silty GRAVEL, fine to coarse, with cobbles, trace fine to coarse sand, olive brown, moist, no odor.	GP-GM				0.5	MW9-50-51 (1028)		Bentonite Chips
55		Sitly GRAVEL, fine to coarse, minor fine to coarse sand, olive brown, moist.	GP-GM				0.8	MW9-55-56 (1043)		
60		Silty GRAVEL, fine to coarse, with medium to coarse sand, olive brown, dense, moist, no odor.	GM				1.3	MW9-60-61 (1108)		Blank Casing
65						NA				
70							1.6	MW9-70-71 (1250)		
75										

Well Construction Information

Monument Type: Flush-Mount Steel
Casing Diameter (inches): 2
Screen Slot Size (inches): 0.010
Screened Interval (ft bgs): 111.5-116.5

Filter Pack: #2/12 medium sand
Surface Seal: Concrete
Annular Seal: Bentonite chips

Ground Surface Elevation (ft): NA
Top of Casing Elevation (ft): 197.73
Boring Abandonment: NA
Surveyed Location: X: NA Y: NA

FARALLON CONSULTING
975 5th Avenue Northwest
Issaquah, WA 98027

Log of Boring: MW-9

Depth (feet bgs.)	Lithologic Description	USCS	PID (ppm)	Sample ID	Well Construction Details
75					
80	Silty GRAVEL, fine to coarse, with medium to coarse sand, olive brown, moist, no odor.	GM	1.0	MW9-80-81 (1355)	
85					
90			1.4	MW9-90-91 (1414)	
95	Trends to GRAVEL, fine to coarse, with medium to coarse sand, minor silt.	GP			
100	Coloration trends grey.	GP		MW9-100-101 (1618)	
105	SILT with fine SAND, grey, stiff, organics present including woody debris.	ML			
110	Silty SAND, fine to medium, dark greyish brown to black with lenses of SP.	SM		MW9-109-110 (1635)	Bentonite Seal
115	Same as above, fine rounded gravel present.	SM			Screen
120	Lenses SP and SM (fine) trending to GP-GM.	SM			Sand Pack
125	SILT, with fine sand, grey-green, stiff, moist, no odor.	ML		MW9-117-118 (0756)	
130	Same as above, trace fine sand.	ML		MW9-123-124 (0800)	
135	Brownish coloration, less dense, moist to wet, organics present.	SM			
140	Silty SAND, fine, moist, brown, no odor.			MW9-129 (0828)	
145					
150					

Well Construction Information

Monument Type: Flush-Mount Steel
Casing Diameter (inches): 2
Screen Slot Size (inches): 0.010
Screened Interval (ft bgs): 111.5-116.5

Filter Pack: #2/12 medium sand
Surface Seal: Concrete
Annular Seal: Bentonite chips

Ground Surface Elevation (ft): NA
Top of Casing Elevation (ft): 197.73
Boring Abandonment: NA
Surveyed Location: X: NA Y: NA

FARALLON CONSULTING
975 5th Avenue Northwest
Issaquah, WA 98027

Log of Boring: MW-10

Client: Mr. W. Allison
Project: Allison's Norge Village
Location: Olympia, WA
Farallon PN: 663-010
Logged By: J. Schmitt

Date/Time Started:	8/24/06; 1555	**Sampler Type:**	NA
Date/Time Completed:	8/25/06; 1700	**Drive Hammer (lbs.):**	NA
Equipment:	Sonic 50K	**Depth of Water ATD (ft bgs):**	102
Drilling Company:	Cascade Drilling	**Total Boring Depth (ft bgs):**	124
Drilling Foreman:	Rodney	**Total Well Depth (ft bgs):**	114
Drilling Method:	Sonic		

Depth (feet bgs.)	Sample Interval	Lithologic Description	USCS	USGS Graphic	% Recovery	Blow Counts 8/8/8	PID (units)	Sample ID	Sample Analyzed	Boring/Well Construction Details
0		Gravelly SAND, with silt, dark brown, moist.	SP-SM							Concrete
5		Silty SAND, fine, brown to red brown, moist.	SM							
		No Recovery.								
10		SILT, with fine sand and minor gravel, brown to red brown, inter-bedded with 2" thick medium SAND with minor silt, moist.	ML-SM				2.4	MW-10-11-12 (1600)		
15		SAND, fine to medium, well sorted, gray brown, trace silt, moist to wet.	SP				3.7	MW-10-14-15 (1615)		
20		Silty SAND, fine, with trace gravel, light brown to tan, wet. Grades to SILT, with fine sand.	ML-SM				0.3	MW-10-20-21 (1645)		
25		SILT, minor fine sand, trace gravel, gray brown, moist.	ML							
		Poorly sorted SAND with gravel and trace silt, gray brown, moist.	SP				0.8	MW-10-26-27 (1700)		
30		Gravelly SILT, with sand, gray, moist, dense to very dense.	GM							
		Silty GRAVEL, trace to minor sand, slightly moist, gray brown.	GM				0.2	MW-10-32-33 (1715)		
35		Silty GRAVEL, with minor sand, gray brown, moist.	GM				0.5	MW-10-37-38		
		Sandy GRAVEL, with minor silt, gray brown, moist.	GP-GM							
40		Sandy GRAVEL, minor silt, brown to gray brown, moist.	GM							
		Silty GRAVEL, minor sand, gray brown, moist.	GM		100		4.2	MW-10-43 (0918)		
45		Gravelly SILT to silty GRAVEL, with sand, gray brown/olive gray, moist.	GM		100					
		Gravelly SILT to Silty GRAVEL, with sand (well graded silt, gravel, and sand)	GM		100		8.7	MW-10-48-49 (0948)		Bentonite Chips
50		Silty GRAVEL, fine, with sand (well graded silt, sand, and gravel).	GM		100					
55		Silty GRAVEL, minor sand, gray brown to olive gray, dense, moist.	GM		100					
60		Well graded GRAVEL with silt and sand, gray brown, moist.	GW			NA				Blank Casing
65		Sandy GRAVEL, fine to coarse, sand is medium to coarse, with silt, gray brown, moist to wet.	GW		100		4.9	MW-10-67-68 (1140)		
70		Sandy GRAVEL, sand is medium to coarse, with minor silt, gravel subrounded with trace cobbles, gray brown, moist to wet.	GP							
75										

Well Construction Information

Monument Type: Flush-Mount Steel
Casing Diameter (inches): 2
Screen Slot Size (inches): 0.010
Screened Interval (ft bgs): 109-114

Filter Pack: #2/12 Sand
Surface Seal: Concrete
Annular Seal: Bentonite chips

Ground Surface Elevation (ft): NA
Top of Casing Elevation (ft): 199.18
Boring Abandonment: NA
Surveyed Location: X: NA Y: NA

FARALLON CONSULTING
975 5th Avenue Northwest
Issaquah, WA 98027

Log of Boring: MW-10

Depth (feet bgs.)	Sample Interval	Lithologic Description	USCS	USGS Graphic	% Recovery	Blow Counts 8/8/8	PID (ppm)	Sample ID	Sample Analyzed	Well Construction Details
75							10.9	MW-10-76-77 (1209)		
80		SAND, fine to medium, with minor silt and gravel, brown to gray brown, wet.	SP							
85							3.2	MW-10-86-87 (1409)		
90		Gravelly SILT/silty GRAVEL, fine to coarse, with sand, gray brown, moist to wet.	GP-GM							
95		Silty sandy GRAVEL, fine to coarse sand, brown, wet to saturated.	GM				1.1	MW-10-96		
100		Silty sandy GRAVEL, fine, sand is coarse, brown to gray brown, saturated at 102'.	GW							
105		GRAVEL, with silt and fine to coarse sand, brown, saturated.	GP-GM				6.5	MW-10-106-107 (1500)		.010 Slot Screen Blank Casing
110					85					Sand Pack
115		Gravelly SILT, with minor sand, dense, wet to moist, dark gray brown.	ML				1.9	MW-10-113-114 (1546)		
120							3.9	MW-10-116-117 (1555)		Bentonite Chips
125		Silty SAND, fine, with trace gravel, dark gray to olive gray, wet.	SM							
130										
135										
140										
145										
150										

Well Construction Information

Monument Type: Flush-Mount Steel
Casing Diameter (inches): 2
Screen Slot Size (inches): 0.010
Screened Interval (ft bgs): 109-114

Filter Pack: #2/12 Sand
Surface Seal: Concrete
Annular Seal: Bentonite chips

Ground Surface Elevation (ft): NA
Top of Casing Elevation (ft): 199.18
Boring Abandonment: NA
Surveyed Location: X: NA Y: NA

FARALLON CONSULTING
975 5th Avenue Northwest
Issaquah, WA 98027

Log of Boring: MW-11

Client: Safeco
Project: Allison's Norge Village
Location: Olympia, Washington
Farallon PN: 663-010
Logged By: J. Schmitt

Date/Time Started:	8/21/06 1100	**Sampler Type:**	NA
Date/Time Completed:	8/22/06 1600	**Drive Hammer (lbs.):**	NA
Equipment:	Sonic 50K	**Depth of Water ATD (ft bgs):**	88
Drilling Company:	CDI	**Total Boring Depth (ft bgs):**	131
Drilling Foreman:	Rodney	**Total Well Depth (ft bgs):**	116
Drilling Method:	Sonic		

Depth (feet bgs.)	Sample Interval	Lithologic Description	USCS	USGS Graphic	% Recovery	Blow Counts 8/8/8	PID (units)	Sample ID	Sample Analyzed	Boring/Well Construction Details
0		Hand dug to 5-feet - Lithology not observed.	NA							Concrete
5		SAND, fine to medium, brown, loose, moist.	SP		UK		11.8			
10										
15		SILT, with fine sand, brown, moist, no odor.	ML		100		11.8			
20		Silty SAND, fine, brown, moist.	SM		100		10.7			
25		Silty GRAVEL, fine to coarse, trace fine sand, grayish brown, very dense, moist, no odor.	GM		100		116			
30					100		10.4			
35					100		6.7			
40		GRAVEL, fine to coarse, with medium to coarse sand, trace to minor silt, brown, moist, no odor.	GP		100		12.4			
45		Silty GRAVEL, fine to coarse, minor medium to coarse sand, brown, moist, no odor.	GM		100		20.9			
50		Silty GRAVEL, fine to coarse, trace medium to coarse sand, olive gray, moist, no odor	GM		100		10.2			
55							5.4			Blank Well Pipe
60		Silty GRAVEL, fine to coarse, trave medium to coarse sand, olive brown, moist, no odor.	GM				5.2			
65							5.4			Bentonite Chips
70		GRAVEL,. with sand and silt, moist, no odor.	GP-GM		100	NA	4.8			
75							3.2			
							13.0			

Well Construction Information

Monument Type: Flush Mount
Casing Diameter (inches): 2"
Screen Slot Size (inches): 0.010
Screened Interval (ft bgs): 110.7-115.7

Filter Pack: #2/12 medium sand
Surface Seal: Concrete
Annular Seal: Bentonite chips

Ground Surface Elevation (ft): NA
Top of Casing Elevation (ft): NA
Boring Abandonment: NA
Surveyed Location: X: NA Y: NA

FARALLON CONSULTING
975 5th Avenue Northwest
Issaquah, WA 98027

Log of Boring: MW-11

Depth (feet bgs.)	Sample Interval	Lithologic Description	USCS	USGS Graphic	% Recovery	Blow Counts 8/8/8	PID (ppm)	Sample ID	Sample Analyzed	Well Construction Details
75										
80		Silty GRAVEL with sand, brown to olive brown, nodules of tan silt, moist, no odor.	GM				27.1			
85		GRAVEL in silty sand matrix, moist to very moist, brown to olive brown.	GM				2.1			
90		No Recovery.	GP				3.1			
95		GRAVEL, fine to coarse, trace silt, trace fine to coarse sand, tan, wet.	GP				1.6			
100							1.4			
105		Silty SAND, fine to medium, gray, medium dense, no odor, trending siltier with depth, dark brown, wet.	SM				2.0 2.1 2.7	MW11-104-105 (0845)		
110		Same as above, contains trace to minor fine to coarse gravel.	SM				1.8	MW11-110-111 (0940)		Sand Pack
115		Silty SAND, fine, with fine to coarse gravel.	SM				1.0	MW11-113-114 (1015)		Screen
120		SILT, with fine to coarse gravel, trace fine sand, brown, moist.	ML		50					Well Sump
125		Same as above, with organic silt (peat), dark brown to back, crumbly, slightly moist. (peat is about 30% of sample volume, unstratified).	ML				2.1	MW11-118-120 (1155)		Bentonite Chips
130		SILT (organic), dark brown to black, trace to minor fine gravel, moist, no odor.	ML				1.4	MW11-123-124 (1200)		
135		SILT, minor fine to coarse gravel, very stiff, dry.	ML							
140		Same as above, mixed in with green clay, unstratified, dry.								
145										
150										

Well Construction Information

Monument Type: Flush Mount
Casing Diameter (inches): 2"
Screen Slot Size (inches): 0.010
Screened Interval (ft bgs): 110.7-115.7

Filter Pack: #2/12 medium sand
Surface Seal: Concrete
Annular Seal: Bentonite chips

Ground Surface Elevation (ft): NA
Top of Casing Elevation (ft): NA
Boring Abandonment: NA
Surveyed Location: X: NA Y: NA

FARALLON CONSULTING
975 5th Avenue Northwest
Issaquah, WA 98027

Log of Boring: SVE-3I

Client: Mr. W. Allison
Project: Allison's Norge Village
Location: Olympia, WA
Farallon PN: 663-010
Logged By: B. Gouran

Date/Time Started:	9/15/2006; 1100	**Sampler Type:**	D&M SS 18"x2"
Date/Time Completed:	9/15/2006; 1400	**Drive Hammer (lbs.):**	300
Equipment:	CME 75	**Depth of Water ATD (ft bgs):**	NE
Drilling Company:	Cascade Drilling	**Total Boring Depth (ft bgs):**	60
Drilling Foreman:	Scott	**Total Well Depth (ft bgs):**	60
Drilling Method:	Hollow Stem Auger		

Depth (feet bgs.)	Sample Interval	Lithologic Description	USCS	USGS Graphic	% Recovery	Blow Counts 8/8/8	PID (units)	Sample ID	Sample Analyzed	Boring/Well Construction Details
0		ASPHALT	AC							
		Observed through cuttings only. GRAVEL, with sand and silt, dark grey-brown, moist.	GP-GM							
		Observed through cuttings only. Silty SAND, fine, red brown to light brown, loose, moist.	SW							
5										
		Observed through cuttings only. Silty SAND, fine, minor gravel, grey brown, moist.	SM							
10										
15										Concrete Casing / Bentonite
20										
25		Observed through cuttings only. SAND, fine, with gravel and silt, gray brown to olive gray, moist.	SM							
30										Sand Pack

Well Construction Information

Monument Type: Flush-Mount Steel
Casing Diameter (inches): 4
Screen Slot Size (inches): 0.02
Screened Interval (ft bgs): 25-60
Filter Pack: 2/20 Sand
Surface Seal: Concrete
Annular Seal: Bentonite
Ground Surface Elevation (ft): NA
Top of Casing Elevation (ft): NA
Boring Abandonment: NA
Surveyed Location: X: NA Y: NA

FARALLON CONSULTING
975 5th Avenue Northwest
Issaquah, WA 98027

Log of Boring: SVE-3I

Depth (feet bgs.)	Sample Interval	Lithologic Description	USCS	USGS Graphic	% Recovery	Blow Counts 8/8/8	PID (ppm)	Sample ID	Sample Analyzed	Well Construction Details
35		Observed through cuttings only. GRAVEL with sand, fine to coarse, minor silt, moist ti wet,	GP							
40										Screen
45										
50										
55										
60										

Well Construction Information

Monument Type: Flush-Mount Steel
Casing Diameter (inches): 4
Screen Slot Size (inches): 0.02
Screened Interval (ft bgs): 25-60

Filter Pack: 2/20 Sand
Surface Seal: Concrete
Annular Seal: Bentonite

Ground Surface Elevation (ft): NA
Top of Casing Elevation (ft): NA
Boring Abandonment: NA
Surveyed Location: X: NA Y: NA

FARALLON CONSULTING
975 5th Avenue Northwest
Issaquah, WA 98027

Log of Boring: SVE-4S

Client: Mr. W. Allison
Project: Allison's Norge Village
Location: Olympia, WA

Farallon PN: 663-010

Logged By: B. Gouran

Date/Time Started:	9/14/2006; 1430	**Sampler Type:**	D&M SS 18"x2"
Date/Time Completed:	9/14/2006; 1615	**Drive Hammer (lbs.):**	300
Equipment:	CME 75	**Depth of Water ATD (ft bgs):**	NE
Drilling Company:	Cascade Drilling	**Total Boring Depth (ft bgs):**	20
Drilling Foreman:	Scott	**Total Well Depth (ft bgs):**	20
Drilling Method:	Hollow Stem Auger		

Depth (feet bgs.)	Sample Interval	Lithologic Description	USCS	USGS Graphic	% Recovery	Blow Counts 8/8/8	PID (units)	Sample ID	Sample Analyzed	Boring/Well Construction Details
0		Asphalt concrete.	AC							Concrete Casing Bentonite
		GRAVEL with sand and silt, grey-brown.	GP							
		SAND, fine, with silt, light brown, damp	SP							
5		SAND, fine, with silt and trace gravel, loose, light brown to red brown, damp	SP		30	0/1/0	2.6	SVE-4S-4.5-5.5		
10		SAND, medium to fine, trace silt, grey, well sorted, moist	SP		100	6/11/12	3.9	SVE-4S-10-10.5		
15		SAND, medium to fine, trace silt, grey to brown, well sorted, moist	SP		100	14/15/19	2.3	SVE-4S-15-15.5		Screen Sand Pack
20		Silty SAND, fine, olive grey to red	SP		100	19/17/19	9.5	SVE-4S-20-20.5		
		SAND, fine, trace silt, moist to wet	SP							
25										

Well Construction Information

Monument Type: Flush-Mount Steel
Casing Diameter (inches): 4
Screen Slot Size (inches): 0.02
Screened Interval (ft bgs): 3-20

Filter Pack: 2/20 Sand
Surface Seal: Concrete
Annular Seal: Bentonite

Ground Surface Elevation (ft): NA
Top of Casing Elevation (ft): NA
Boring Abandonment: NA
Surveyed Location: X: NA Y: NA

FARALLON CONSULTING
975 5th Avenue Northwest
Issaquah, WA 98027

Log of Boring: SVE-5S

Client: Mr. W. Allison
Project: Allison's Norge Village
Location: Olympia, WA
Farallon PN: 663-010
Logged By: B. Gouran

Date/Time Started:	9/14/2006; 1200	**Sampler Type:**	D&M SS 18"x2"
Date/Time Completed:	9/14/2006; 1345	**Drive Hammer (lbs.):**	300
Equipment:	CME 75	**Depth of Water ATD (ft bgs):**	NE
Drilling Company:	Cascade Drilling	**Total Boring Depth (ft bgs):**	20
Drilling Foreman:	Scott	**Total Well Depth (ft bgs):**	20
Drilling Method:	Hollow Stem Auger		

Depth (feet bgs.)	Sample Interval	Lithologic Description	USCS	USGS Graphic	% Recovery	Blow Counts 8/8/8	PID (units)	Sample ID	Sample Analyzed	Boring/Well Construction Details
0		Asphalt concrete.	AC							
		Observed through cuttings only. Sandy GRAVEL, with silt, brown, moist.	GP							Casing, Concrete, Bentonite
5		Observed through cuttings only. SAND, fine, with silt, trace gravel, light brown, moist.	SP							
		Becomes gray brown at 8'								
10										Sand Pack
15										Screen
20										

Well Construction Information

Monument Type: Flush-Mount Steel
Casing Diameter (inches): 4
Screen Slot Size (inches): 0.02
Screened Interval (ft bgs): 3-20
Filter Pack: 2/20 Sand
Surface Seal: Concrete
Annular Seal: Bentonite
Ground Surface Elevation (ft): NA
Top of Casing Elevation (ft): NA
Boring Abandonment: NA
Surveyed Location: X: NA Y: NA

FARALLON CONSULTING
975 5th Avenue Northwest
Issaquah, WA 98027

Log of Boring: SVE-6I

Client: Mr. W. Allison
Project: Allison's Norge Village
Location: Olympia, WA
Farallon PN: 663-010
Logged By: B. Gouran

Date/Time Started:	9/19/2006; 1245	**Sampler Type:**	D&M SS 18"x2"
Date/Time Completed:	9/19/2006; 1600	**Drive Hammer (lbs.):**	300
Equipment:	CME 75	**Depth of Water ATD (ft bgs):**	NE
Drilling Company:	Cascade Drilling	**Total Boring Depth (ft bgs):**	60.5
Drilling Foreman:	Scott	**Total Well Depth (ft bgs):**	60
Drilling Method:	Hollow Stem Auger		

Depth (feet bgs.)	Sample Interval	Lithologic Description	USCS	USGS Graphic	% Recovery	Blow Counts 8/8/8	PID (units)	Sample ID	Sample Analyzed	Boring/Well Construction Details
0		Asphalt concrete.	AC							
		Observed through cuttings only. GRAVEL with sand and silt, grey-brown, moist.	GP							
		Observed through cuttings only. Silty SAND, fine, moist, grey.	ML							
5										
10		Observed through cuttings only. SAND, fine to medium, minor silt, trace gravel, grey, moist.	SP							
15										
20										
25										
30		Gravely SAND, with some silt, to Sandy GRAVEL, with some silt, grey	SP							

Concrete
Bentonite
Casing

Well Construction Information

Monument Type: Flush-Mount Steel
Casing Diameter (inches): 4
Screen Slot Size (inches): 0.02
Screened Interval (ft bgs): 25-60
Filter Pack: 2/20 Sand
Surface Seal: Concrete
Annular Seal: Bentonite
Ground Surface Elevation (ft): NA
Top of Casing Elevation (ft): NA
Boring Abandonment: NA
Surveyed Location: X: NA Y: NA

FARALLON CONSULTING
975 5th Avenue Northwest
Issaquah, WA 98027

Log of Boring: SVE-6I

Depth (feet bgs.)	Sample Interval	Lithologic Description	USCS	USGS Graphic	% Recovery	Blow Counts 8/8/8	PID (ppm)	Sample ID	Sample Analyzed	Well Construction Details
30		brown to olive grey, very dense, moist			70	50	2.5	SVE-6I-30.0-30.5		Sand Pack
35		SAND, fine to medium, with medium gravel and some silt, grey brown to brown, moist	SP		70	38/50	3.8	SVE-6I-34.5-35.0		
40		Sandy GRAVEY, coarse, with some silt,m brown with red mottling, very dense, moist to very moist	GP		70	42/50	NA	SVE-6I-39.5-40.0		Screen
45		SAND, with gravel and some silt, brown to olive grey, very dense, moist to very moist	SP		50	50	4.0	SVE-6I-44.5-45.0		
50		Gravelly SAND, with some silt, olive grey to brown, very dense, moist	SP		45	50	4.1	SVE-6I-50.0-50.5		
55		Sandy GRAVEL, medium to coarse, with silt, sand and gravel, olive grey to brown, very dense, very moist	GP		30	50	3.5	SVE-6I-55.0		
60		Sandy GRAVEL, coarse, with some silt, olive grey to brown, very dense, very moist	GP		NA	50	4.8	SVE-6I-60.0		

Well Construction Information

Monument Type: Flush-Mount Steel
Casing Diameter (inches): 4
Screen Slot Size (inches): 0.02
Screened Interval (ft bgs): 25-60

Filter Pack: 2/20 Sand
Surface Seal: Concrete
Annular Seal: Bentonite

Ground Surface Elevation (ft): NA
Top of Casing Elevation (ft): NA
Boring Abandonment: NA
Surveyed Location: X: NA Y: NA

FARALLON CONSULTING
975 5th Avenue Northwest
Issaquah, WA 98027

Log of Boring: SVE-7S

Client: Mr. W. Allison
Project: Allison's Norge Village
Location: Olympia, WA
Farallon PN: 663-010
Logged By: B. Gouran

Date/Time Started:	9/15/2006; 1405	**Sampler Type:**	D&M SS 18"x2"
Date/Time Completed:	9/16/2006	**Drive Hammer (lbs.):**	300
Equipment:	CME 75	**Depth of Water ATD (ft bgs):**	NE
Drilling Company:	Cascade Drilling	**Total Boring Depth (ft bgs):**	20
Drilling Foreman:	Scott	**Total Well Depth (ft bgs):**	20
Drilling Method:	Hollow Stem Auger		

Depth (feet bgs.)	Sample Interval	Lithologic Description	USCS	USGS Graphic	% Recovery	Blow Counts 8/8/8	PID (units)	Sample ID	Sample Analyzed	Boring/Well Construction Details
0										Casing
										CO
										Bentonite
5		Silty SAND, fine, light brown, medium dense.	SM		100	7/8/9	1.8	SVE-7S-5.0-5.5	X	
		SAND, fine, minor silt, light brown, medium dense, moist.	SP							
10		SAND, trace silt, grey to grey brown, medium dense, moist.	SP		100	10/13/15	2.9	SVE-7S-9.5-10.0		
		SAND, fine to medium, trace silt, grey brown, medium dense, moist.	SP							
15					100	14/15/16	2.9	SVE-7S-14.5-15.0		Screen
										Sand Pack
		Silty SAND, fine, medium dense, moist.	SM							
20										

Well Construction Information

Monument Type: Flush-Mount Steel
Casing Diameter (inches): 4
Screen Slot Size (inches): 0.02
Screened Interval (ft bgs): 3-20
Filter Pack: 2/20 Sand
Surface Seal: Concrete
Annular Seal: Bentonite
Ground Surface Elevation (ft): NA
Top of Casing Elevation (ft): NA
Boring Abandonment: NA
Surveyed Location: **X:** NA **Y:** NA

FARALLON CONSULTING
975 5th Avenue Northwest
Issaquah, WA 98027

Log of Boring: SVE-7S

Depth (feet bgs.)	Sample Interval	Lithologic Description	USCS	USGS Graphic	% Recovery	Blow Counts 8/8/8	PID (ppm)	Sample ID	Sample Analyzed	Well Construction Details
20		Silty SAND, fine, brown, wet.	SM							

Well Construction Information

Monument Type:	Flush-Mount Steel	**Filter Pack:**	2/20 Sand
Casing Diameter (inches):	4	**Surface Seal:**	Concrete
Screen Slot Size (inches):	0.02	**Annular Seal:**	Bentonite
Screened Interval (ft bgs):	3-20		

Ground Surface Elevation (ft): NA
Top of Casing Elevation (ft): NA
Boring Abandonment: NA
Surveyed Location: **X:** NA **Y:** NA

FARALLON CONSULTING
975 5th Avenue Northwest
Issaquah, WA 98027

Log of Boring: SVE-8S

Client: Mr. W. Allison
Project: Allison's Norge Village
Location: Olympia, WA

Farallon PN: 663-010

Logged By: B. Gouran

Date/Time Started:	9/14/2006; 1645	**Sampler Type:**	D&M SS 18"x2"
Date/Time Completed:	9/14/2006; 1745	**Drive Hammer (lbs.):**	300
Equipment:	CME 75	**Depth of Water ATD (ft bgs):**	NE
Drilling Company:	Cascade Drilling	**Total Boring Depth (ft bgs):**	20
Drilling Foreman:	Scott	**Total Well Depth (ft bgs):**	20
Drilling Method:	Hollow Stem Auger		

Depth (feet bgs.)	Sample Interval	Lithologic Description	USCS	USGS Graphic	% Recovery	Blow Counts 8/8/8	PID (units)	Sample ID	Sample Analyzed	Boring/Well Construction Details
0		ASPHALT	AC							
		Observed through cuttings only. GRAVEL with sand and silt, grey brown.	GP-GM							
		Observed through cuttings only. Silty SAND, fine, light brown, loose, moist.	SM							
5										
10		Observed through cuttings only. SAND, fine, grey brown to grey.	SP							
15		GRAVEL	GW							Screen
20										Sand Pack

Casing
Concrete
Bentonite

Well Construction Information

Monument Type: Flush-Mount Steel
Casing Diameter (inches): 4
Screen Slot Size (inches): 0.02
Screened Interval (ft bgs): 3-20

Filter Pack: 2/20 Sand
Surface Seal: Concrete
Annular Seal: Bentonite

Ground Surface Elevation (ft): NA
Top of Casing Elevation (ft): NA
Boring Abandonment: NA
Surveyed Location: X: NA Y: NA

FARALLON CONSULTING
975 5th Avenue Northwest
Issaquah, WA 98027

Log of Boring: SVE-9I

Client: Mr. W. Allison
Project: Allison's Norge Village
Location: Olympia, WA
Farallon PN: 663-010
Logged By: B. Gouran

Date/Time Started:	9/15/2006; 0710	**Sampler Type:**	D&M SS 18"x2"
Date/Time Completed:	9/15/2006; 1030	**Drive Hammer (lbs.):**	300
Equipment:	CME 75	**Depth of Water ATD (ft bgs):**	NE
Drilling Company:	Cascade Drilling	**Total Boring Depth (ft bgs):**	60
Drilling Foreman:	Scott	**Total Well Depth (ft bgs):**	60
Drilling Method:	Hollow Stem Auger		

Depth (feet bgs.)	Sample Interval	Lithologic Description	USCS	USGS Graphic	% Recovery	Blow Counts 8/8/8	PID (units)	Sample ID	Sample Analyzed	Boring/Well Construction Details
0		Asphalt concrete.	AC							
		Observed through cuttings only. Sandy GRAVEL, with silt, dark grey-brown.	GP							
5		Observed through cuttings only. Silty SAND, trace gravel, light red-brown, loose, moist.	SM							
10		Observed through cuttings only. SAND, fine, minor silt, grey brown.	SP							
15										Bentonite
20										
25		Observed through cuttings only. GRAVEL with sand, trace silt, grey-brown, moist.	GP							
30										Sand Pack

Concrete Casing

Well Construction Information

Monument Type: Flush-Mount Steel
Casing Diameter (inches): 4
Screen Slot Size (inches): 0.02
Screened Interval (ft bgs): 25-60
Filter Pack: 2/20 Sand
Surface Seal: Concrete
Annular Seal: Bentonite
Ground Surface Elevation (ft): NA
Top of Casing Elevation (ft): NA
Boring Abandonment: NA
Surveyed Location: X: NA Y: NA

FARALLON CONSULTING
975 5th Avenue Northwest
Issaquah, WA 98027

Log of Boring: SVE-9I

Depth (feet bgs.)	Sample Interval	Lithologic Description	USCS	USGS Graphic	% Recovery	Blow Counts 8/8/8	PID (ppm)	Sample ID	Sample Analyzed	Well Construction Detailse
35										
40										Screen
45		Observed through cuttings only. GRAVEL, coarse, minor sand and silt.	GP							
50										
55										
60										

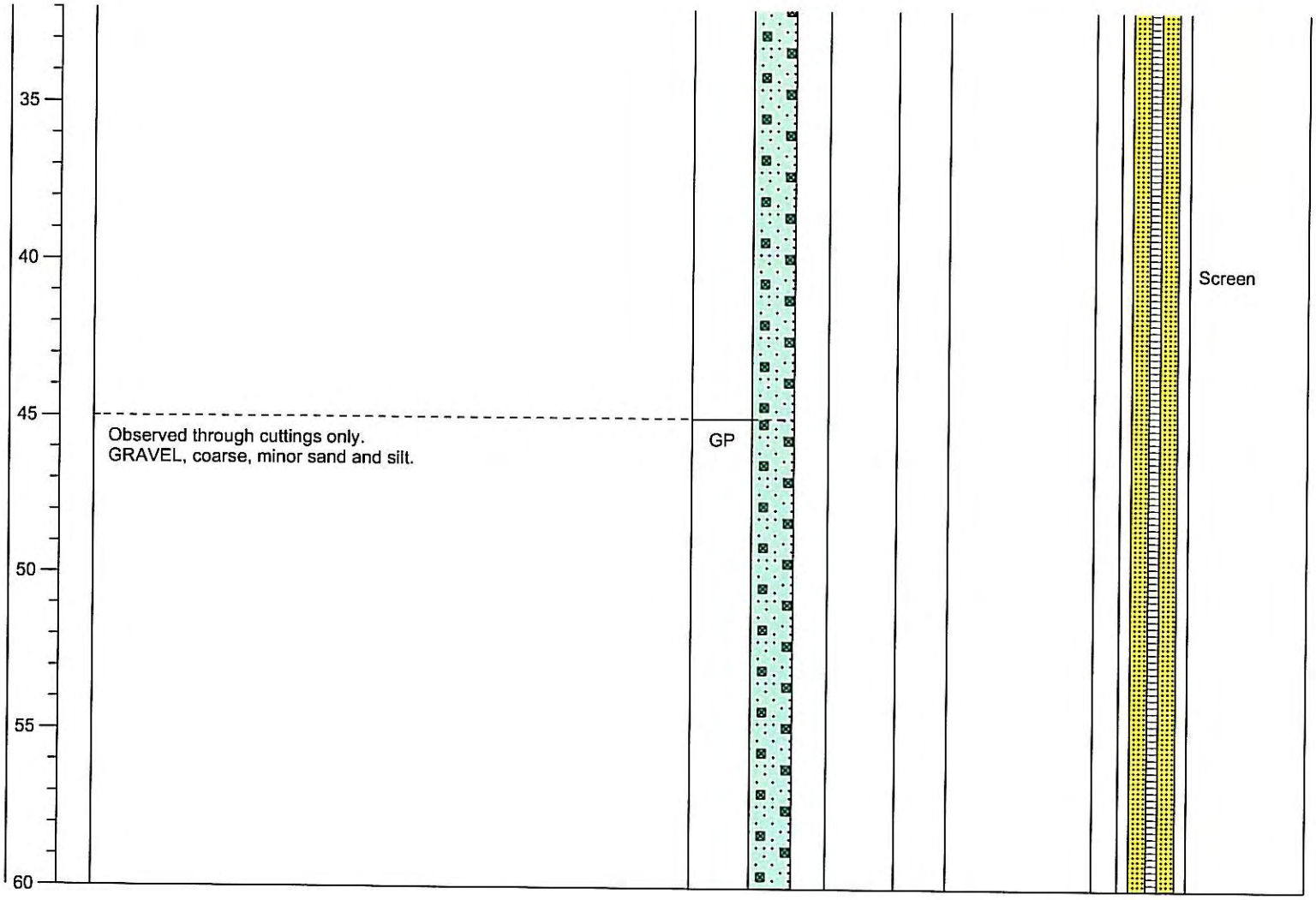

Well Construction Information

Monument Type: Flush-Mount Steel
Casing Diameter (inches): 4
Screen Slot Size (inches): 0.02
Screened Interval (ft bgs): 25-60

Filter Pack: 2/20 Sand
Surface Seal: Concrete
Annular Seal: Bentonite

Ground Surface Elevation (ft): NA
Top of Casing Elevation (ft): NA
Boring Abandonment: NA
Surveyed Location: X: NA Y: NA

FARALLON CONSULTING
975 5th Avenue Northwest
Issaquah, WA 98027

Log of Boring: SVE-13S

Client: Mr. W. Allison
Project: Allison's Norge Village
Location: Olympia, WA
Farallon PN: 663-010
Logged By: B. Gouran

Date/Time Started:	9/20/2006; 0740	**Sampler Type:**	D&M SS 18"x2"
Date/Time Completed:	9/20/2006; 1005	**Drive Hammer (lbs.):**	300
Equipment:	CME 75	**Depth of Water ATD (ft bgs):**	NE
Drilling Company:	Cascade Drilling	**Total Boring Depth (ft bgs):**	20.5
Drilling Foreman:	Scott	**Total Well Depth (ft bgs):**	20
Drilling Method:	Hollow Stem Auger		

Depth (feet bgs.)	Sample Interval	Lithologic Description	USCS	USGS Graphic	% Recovery	Blow Counts 8/8/8	PID (units)	Sample ID	Sample Analyzed	Boring/Well Construction Details
0		GRAVEL with sand, trace silt, dark grey brown, moist.	GP							Concrete
		Silty SAND, fine, red brown to brown, moist.	SP							Bentonite
										Casing
5		Silty SAND, fine, red brown to brown, loose to medium dense, moist.	SP		100	4/5/6	5.9	SVE-13S-5.0-5.5		
10		SAND, fine to medium, trace silt, grey brown, moist.	SP		100	10/12/14	3.0	SVE-13S-9.5-10.0		Screen
15		SAND, fine to medium, trace silt and gravel, grey brown, moist.	SP		100	6/8/7	2.4	SVE-13S-15.0-15.5		Sand Pack
20		GRAVEL with sand and silt, grey brown, very dense.	GP		50	34/50	1.6	SVE-13S-20.0		
25										

Well Construction Information

Monument Type: Flush-Mount Steel
Casing Diameter (inches): 4
Screen Slot Size (inches): 0.02
Screened Interval (ft bgs): 3-20
Filter Pack: 2/20 Sand
Surface Seal: Concrete
Annular Seal: Bentonite
Ground Surface Elevation (ft): NA
Top of Casing Elevation (ft): NA
Boring Abandonment: NA
Surveyed Location: **X:** NA **Y:** NA

FARALLON CONSULTING
975 5th Avenue Northwest
Issaquah, WA 98027

Log of Boring: SVE-15S

Client: Mr. W. Allison
Project: Allison's Norge Village
Location: Olympia, WA
Farallon PN: 663-010
Logged By: B. Gouran

Date/Time Started:	9/18/2006; 0830	**Sampler Type:**	D&M SS 18"x2"
Date/Time Completed:	9/18/2006; 1055	**Drive Hammer (lbs.):**	300
Equipment:	CME 75	**Depth of Water ATD (ft bgs):**	NE
Drilling Company:	Cascade Drilling	**Total Boring Depth (ft bgs):**	20
Drilling Foreman:	Scott	**Total Well Depth (ft bgs):**	20
Drilling Method:	Hollow Stem Auger		

Depth (feet bgs.)	Sample Interval	Lithologic Description	USCS	USGS Graphic	% Recovery	Blow Counts 8/8/8	PID (units)	Sample ID	Sample Analyzed	Boring/Well Construction Details
0		Silty GRAVEL, with sand, dark grey brown, moist	GP		NA	NA	NA	NA	NA	
		Silty SAND, fine, light red brown, damp to moist	SP		NA	NA	NA	NA	NA	Concrete Casing Bentonite
5										
		SAND, fine, minor silt, light brown, moist	SP		NA	NA	NA	NA	NA	
		Boring Not Logged								
10										Sand Pack
15										Screen
20										

Well Construction Information

Monument Type: Flush-Mount Steel
Casing Diameter (inches): 4
Screen Slot Size (inches): 0.02
Screened Interval (ft bgs): 3-20

Filter Pack: 2/20 Sand
Surface Seal: Concrete
Annular Seal: Bentonite

Ground Surface Elevation (ft): NA
Top of Casing Elevation (ft): NA
Boring Abandonment: NA
Surveyed Location: X: NA Y: NA

FARALLON CONSULTING
975 5th Avenue Northwest
Issaquah, WA 98027

Log of Boring: SVE-16I

Client: Mr. W. Allison
Project: Allison's Norge Village
Location: Olympia, WA
Farallon PN: 663-010
Logged By: B. Gouran

Date/Time Started:	9/18/2006; 1105	**Sampler Type:**	D&M SS 18"x2"
Date/Time Completed:	9/18/2006; 1505	**Drive Hammer (lbs.):**	300
Equipment:	CME 75	**Depth of Water ATD (ft bgs):**	NE
Drilling Company:	Cascade Drilling	**Total Boring Depth (ft bgs):**	60
Drilling Foreman:	Scott	**Total Well Depth (ft bgs):**	60
Drilling Method:	Hollow Stem Auger		

Depth (feet bgs.)	Sample Interval	Lithologic Description	USCS	USGS Graphic	% Recovery	Blow Counts 8/8/8	PID (units)	Sample ID	Sample Analyzed	Boring/Well Construction Details
0		Observed through cuttings only. Silty SAND, fine, light red-brown, loose, moist.	SP							Concrete
5					NA	NA	NA	NA		Casing
10										
15		SAND, fine to medium, with fine gravel and silt, medium dense.	SP-SM		100	10/12/12	NA	SVE-16I-15.0-15.5		Bentonite
		SAND, fine to medium, trace gravel, grey brown, medium dense, moist.	SP							
20		SAND, fine to medium, trace silt, grey brown, medium dense, moist	SP		100	7/9/10	2.5	SVE-16I-19.5-20.0	X	
		Silty SAND, fine, grey brown, medium dense, moist.	SM							
25		GRAVEL with sand, trace silt, grey brown, very dense, moist.	GP		90	38/50	0.7	SVE-16I-24.5-25.0		Sand Pack
30		GRAVEL with sand, minor silt, brown to light brown moist, very dense.	GP		100	36/50	1.9	SVE-16I-30.0-30.5	X	Screen

Well Construction Information

Monument Type: Flush-Mount Steel
Casing Diameter (inches): 4
Screen Slot Size (inches): 0.02
Screened Interval (ft bgs): 25-60
Filter Pack: 2/20 Sand
Surface Seal: Concrete
Annular Seal: Bentonite
Ground Surface Elevation (ft): NA
Top of Casing Elevation (ft): NA
Boring Abandonment: NA
Surveyed Location: X: NA Y: NA

FARALLON CONSULTING
975 5th Avenue Northwest
Issaquah, WA 98027

Log of Boring: SVE-16I

Depth (feet bgs.)	Sample Interval	Lithologic Description	USCS	USGS Graphic	% Recovery	Blow Counts 8/8/8	PID (ppm)	Sample ID	Sample Analyzed	Well Construction Detailse
35		GRAVEL with sand and silt, brown, moist, very dense.	GP		90	31/50	1.3	SVE-16I-35.0-35.5		
		SAND, trace gravel and silt, brown to grey brown, very dense, moist.	SP							
		Boring Not Logged.								
40										Screen
45										Sand Pack
50										
55										
60										

Well Construction Information

Monument Type: Flush-Mount Steel
Casing Diameter (inches): 4
Screen Slot Size (inches): 0.02
Screened Interval (ft bgs): 25-60

Filter Pack: 2/20 Sand
Surface Seal: Concrete
Annular Seal: Bentonite

Ground Surface Elevation (ft): NA
Top of Casing Elevation (ft): NA
Boring Abandonment: NA
Surveyed Location: X: NA Y: NA

FARALLON CONSULTING
975 5th Avenue Northwest
Issaquah, WA 98027

Log of Boring: SVE-17S

Client: Mr. W. Allison
Project: Allison's Norge Village
Location: Olympia, WA

Farallon PN: 663-010

Logged By: B. Gouran

Date/Time Started:	9/18/2006; 1510	**Sampler Type:**	D&M SS 18"x2"
Date/Time Completed:	9/18/2006; 1730	**Drive Hammer (lbs.):**	300
Equipment:	CME 75	**Depth of Water ATD (ft bgs):**	NE
Drilling Company:	Cascade Drilling	**Total Boring Depth (ft bgs):**	20.5
Drilling Foreman:	Scott	**Total Well Depth (ft bgs):**	20
Drilling Method:	Hollow Stem Auger		

Depth (feet bgs.)	Sample Interval	Lithologic Description	USCS	USGS Graphic	% Recovery	Blow Counts 8/8/8	PID (units)	Sample ID	Sample Analyzed	Boring/Well Construction Details
0		GRAVEL with sand and silt, dark grey brown, moist.	GP							CO
		Silty SAND, fine, trace gravel, red brown, moist.	SP							Bentonite Casing
5		SAND, fine, minor silt, brown-red.	SP		100	4/4/6	1.1	SVE-17S-5.0-5.5	X	
		SAND, fine, with gravel, trace silt, light grey, dense.	SP							
10		SAND, fine, with silt, brown, moist.	SP		100	8/8/8	1.5	SVE-17S-10.0-10.5		Screen
		SAND, fine to medium, trace silt, brown, moist.	SP							
15		Silty SAND, fine, brown with strong red mottling.	SP		100	4/6/8	4.2	SVE-17S-15.0-15.5		Sand Pack
		SAND with sand and silt, grey brown, dense, moist.	SP							
20					100	32/50	4.5	SVE-17S-19.5-20.0		
25										

Well Construction Information

Monument Type: Flush-Mount Steel
Casing Diameter (inches): 4
Screen Slot Size (inches): 0.02
Screened Interval (ft bgs): 3-20

Filter Pack: 2/20 Sand
Surface Seal: Concrete
Annular Seal: Bentonite

Ground Surface Elevation (ft): NA
Top of Casing Elevation (ft): NA
Boring Abandonment: NA
Surveyed Location: X: NA Y: NA

FARALLON CONSULTING
975 5th Avenue Northwest
Issaquah, WA 98027

Log of Boring: SVE-18I

Client: Mr. W. Allison
Project: Allison's Norge Village
Location: Olympia, WA
Farallon PN: 663-010
Logged By: B. Gouran

Date/Time Started:	9/19/2006; 0735	**Sampler Type:**	D&M SS 18"x2"
Date/Time Completed:	9/19/2006	**Drive Hammer (lbs.):**	300
Equipment:	CME 75	**Depth of Water ATD (ft bgs):**	NE
Drilling Company:	Cascade Drilling	**Total Boring Depth (ft bgs):**	60.5
Drilling Foreman:	Scott	**Total Well Depth (ft bgs):**	60
Drilling Method:	Hollow Stem Auger		

Depth (feet bgs.)	Sample Interval	Lithologic Description	USCS	USGS Graphic	% Recovery	Blow Counts 8/8/8	PID (units)	Sample ID	Sample Analyzed	Boring/Well Construction Details
0		GRAVEL, with silt, grey brown, moist	GP							Concrete
		Silty SAND, fine, red brown	SP							Bentonite
5		Silty SAND, fine, brown, moist	SP		100	9/8/7	5.2	SVE-18I-4.5-5.0		
		SAND, fine, trace silt, brown, minor red brown, moist	SP							
10		SAND, fine to medium, trace silt, grey to grey brown, moist	SP		100	9/10/11	3.6	SVE-18I-10-10.5	X	Casing
15		SAND, fine to medium, trace silt, grey to grey brown, moist	SP		100	7/8/9	3.4	SVE-18I-14.5-15		
20		SAND, medium, brown, moist, grading to Silty Sandy GRAVEL, brown, very moist to wet	SP			18/20/23	4.3	SVE-18I-19.5-20.0		
25		Sandy GRAVEL, with silt, grey brown, moist to very moist	GP		75	31/50	3.3	SVE-18I-25.0-25.5		
30		Silty GRAVEL, with sand, olive grey to grey brown, very dense, moist	GP		75	38/50	4.2	SVE-18I-30.0-30.5	X	Sand Pack

Well Construction Information

Monument Type: Flush-Mount Steel
Casing Diameter (inches): 4
Screen Slot Size (inches): 0.02
Screened Interval (ft bgs): 25-60
Filter Pack: 2/20 Sand
Surface Seal: Concrete
Annular Seal: Bentonite
Ground Surface Elevation (ft): NA
Top of Casing Elevation (ft): NA
Boring Abandonment: NA
Surveyed Location: X: NA Y: NA

FARALLON CONSULTING
975 5th Avenue Northwest
Issaquah, WA 98027

Log of Boring: SVE-18I

Depth (feet bgs.)	Lithologic Description	USCS	% Recovery	Blow Counts 8/8/8	PID (ppm)	Sample ID	Sample Analyzed	Well Construction Details
35	Gravely SAND, medium to coarse, to Sandy GRAVEL with silt, borwn to olive grey, very dense, moist	SP	75	39/50	5.6	SVE-18I-35-35.5		
40	Gravelly SAND, with silt, to Sandy GRAVEL, with silt, medium to coarse, grey to brown, moist	SP	50			SVE-18I-40.0		Screen
45	No recovery	SP	0	50				
50	GRAVEL, with coarse sand and trace silt, brown, grey to black, very moist to wet	GP	50	50	5.8	SVE-18I-50.0		
55	GRAVEL, medium to coarse, trace silt, brown, grey to black, wet	GP	60	41/50	7.0	SVE-18I-55.5		
60	GRAVEL, medium to coarse, with sand and trace silt, brown, wet	GP	40	41/50		SVE-18I-60.0	X	

Well Construction Information

Monument Type: Flush-Mount Steel
Casing Diameter (inches): 4
Screen Slot Size (inches): 0.02
Screened Interval (ft bgs): 25-60

Filter Pack: 2/20 Sand
Surface Seal: Concrete
Annular Seal: Bentonite

Ground Surface Elevation (ft): NA
Top of Casing Elevation (ft): NA
Boring Abandonment: NA
Surveyed Location: X: NA Y: NA

APPENDIX B
LABORATORY ANALYTICAL REPORTS

CLEANUP ACTION PROGRESS REPORT
AUGUST 2006 TO AUGUST 2007
Allison's Norge Village (AKA Eastside Laundry)
120 Northeast Turner Street
Olympia, Washington
VCP # SW 0370

Farallon PN: 663-010

OnSite Environmental Inc.
14648 NE 95th Street, Redmond, WA 98052 • (425) 883-3881

October 3, 2006

Carla Brock
Farallon Consulting, LLC
975 5th Avenue NW
Issaquah, WA 98027

Re: Analytical Data for Project 663-010-010
Laboratory Reference No. 0609-149

Dear Carla:

Enclosed are the analytical results and associated quality control data for samples submitted on September 20, 2006.

The standard policy of OnSite Environmental Inc. is to store your samples for 30 days from the date of receipt. If you require longer storage, please contact the laboratory.

We appreciate the opportunity to be of service to you on this project. If you have any questions concerning the data, or need additional information, please feel free to call me.

Sincerely,

David Baumeister
Project Manager

Enclosures

This report pertains to the samples analyzed in accordance with the chain of custody, and is intended only for the use of the individual or company to whom it is addressed.

Date of Report: October 3, 2006
Samples Submitted: September 20, 2006
Laboratory Reference: 0609-149
Project: 663-010-010

Case Narrative

Samples were collected on September 19, 2006 and received by the laboratory on September 20, 2006. They were maintained at the laboratory at a temperature of 2°C to 6°C except as noted below.

General QA/QC issues associated with the analytical data enclosed in this laboratory report will be indicated with a reference to a comment or explanation on the Data Qualifier page. More complex and involved QA/QC issues will be discussed in detail below.

Halogenated Volatiles EPA 8260B Analysis

Per EPA Method 5035A, samples were received by the laboratory in pre-weighed 40 mL VOA vials within 48 hours of sample collection. They were stored in a freezer at between -7°C and -20°C until extraction or analysis.

Any other QA/QC issues associated with this extraction and analysis will be indicated with a footnote reference and discussed in detail on the Data Qualifier page.

This report pertains to the samples analyzed in accordance with the chain of custody,
and is intended only for the use of the individual or company to whom it is addressed.

Date of Report: October 3, 2006
Samples Submitted: September 20, 2006
Laboratory Reference: 0609-149
Project: 663-010-010

HALOGENATED VOLATILES by EPA 8260B
page 1 of 2

Date Extracted: 9-27-06
Date Analyzed: 9-27-06

Matrix: Soil
Units: mg/kg (ppm)

Lab ID: 09-149-02
Client ID: SVE 18I-10.0-10.5

Compound	Results	Flags	PQL
Dichlorodifluoromethane	ND		0.00066
Chloromethane	ND		0.0033
Vinyl Chloride	ND		0.0033
Bromomethane	ND		0.00066
Chloroethane	ND		0.0033
Trichlorofluoromethane	ND		0.00066
1,1-Dichloroethene	ND		0.00066
Iodomethane	ND		0.0033
Methylene Chloride	ND		0.0033
(trans) 1,2-Dichloroethene	ND		0.00066
1,1-Dichloroethane	ND		0.00066
2,2-Dichloropropane	ND		0.00066
(cis) 1,2-Dichloroethene	ND		0.00066
Bromochloromethane	ND		0.00066
Chloroform	ND		0.00066
1,1,1-Trichloroethane	ND		0.00066
Carbon Tetrachloride	ND		0.00066
1,1-Dichloropropene	ND		0.00066
1,2-Dichloroethane	ND		0.00066
Trichloroethene	ND		0.00066
1,2-Dichloropropane	ND		0.00066
Dibromomethane	ND		0.00066
Bromodichloromethane	ND		0.00066
2-Chloroethyl Vinyl Ether	ND		0.0033
(cis) 1,3-Dichloropropene	ND		0.00066
(trans) 1,3-Dichloropropene	ND		0.00066

This report pertains to the samples analyzed in accordance with the chain of custody,
and is intended only for the use of the individual or company to whom it is addressed.

Date of Report: October 3, 2006
Samples Submitted: September 20, 2006
Laboratory Reference: 0609-149
Project: 663-010-010

HALOGENATED VOLATILES by EPA 8260B
page 2 of 2

Lab ID: 09-149-02
Client ID: SVE 18I-10.0-10.5

Compound	Results	Flags	PQL
1,1,2-Trichloroethane	ND		0.00066
Tetrachloroethene	0.013		0.00066
1,3-Dichloropropane	ND		0.00066
Dibromochloromethane	ND		0.00066
1,2-Dibromoethane	ND		0.00066
Chlorobenzene	ND		0.00066
1,1,1,2-Tetrachloroethane	ND		0.00066
Bromoform	ND		0.00066
Bromobenzene	ND		0.00066
1,1,2,2-Tetrachloroethane	ND		0.00066
1,2,3-Trichloropropane	ND		0.00066
2-Chlorotoluene	ND		0.00066
4-Chlorotoluene	ND		0.00066
1,3-Dichlorobenzene	ND		0.00066
1,4-Dichlorobenzene	ND		0.00066
1,2-Dichlorobenzene	ND		0.00066
1,2-Dibromo-3-chloropropane	ND		0.0033
1,2,4-Trichlorobenzene	ND		0.00066
Hexachlorobutadiene	ND		0.0033
1,2,3-Trichlorobenzene	ND		0.00066

Surrogate	Percent Recovery	Control Limits
Dibromofluoromethane	88	71-126
Toluene, d8	89	73-130
4-Bromofluorobenzene	91	70-130

This report pertains to the samples analyzed in accordance with the chain of custody,
and is intended only for the use of the individual or company to whom it is addressed.

Date of Report: October 3, 2006
Samples Submitted: September 20, 2006
Laboratory Reference: 0609-149
Project: 663-010-010

HALOGENATED VOLATILES by EPA 8260B
page 1 of 2

Date Extracted: 9-27-06
Date Analyzed: 9-27-06

Matrix: Soil
Units: mg/kg (ppm)

Lab ID: 09-149-06
Client ID: SVE 18I-30.0-30.5

Compound	Results	Flags	PQL
Dichlorodifluoromethane	ND		0.00054
Chloromethane	ND		0.0027
Vinyl Chloride	ND		0.0027
Bromomethane	ND		0.00054
Chloroethane	ND		0.0027
Trichlorofluoromethane	ND		0.00054
1,1-Dichloroethene	ND		0.00054
Iodomethane	ND		0.0027
Methylene Chloride	ND		0.0027
(trans) 1,2-Dichloroethene	ND		0.00054
1,1-Dichloroethane	ND		0.00054
2,2-Dichloropropane	ND		0.00054
(cis) 1,2-Dichloroethene	ND		0.00054
Bromochloromethane	ND		0.00054
Chloroform	ND		0.00054
1,1,1-Trichloroethane	ND		0.00054
Carbon Tetrachloride	ND		0.00054
1,1-Dichloropropene	ND		0.00054
1,2-Dichloroethane	ND		0.00054
Trichloroethene	ND		0.00054
1,2-Dichloropropane	ND		0.00054
Dibromomethane	ND		0.00054
Bromodichloromethane	ND		0.00054
2-Chloroethyl Vinyl Ether	ND		0.0027
(cis) 1,3-Dichloropropene	ND		0.00054
(trans) 1,3-Dichloropropene	ND		0.00054

This report pertains to the samples analyzed in accordance with the chain of custody,
and is intended only for the use of the individual or company to whom it is addressed.

Date of Report: October 3, 2006
Samples Submitted: September 20, 2006
Laboratory Reference: 0609-149
Project: 663-010-010

HALOGENATED VOLATILES by EPA 8260B
page 2 of 2

Lab ID: 09-149-06
Client ID: SVE 18I-30.0-30.5

Compound	Results	Flags	PQL
1,1,2-Trichloroethane	ND		0.00054
Tetrachloroethene	0.013		0.00054
1,3-Dichloropropane	ND		0.00054
Dibromochloromethane	ND		0.00054
1,2-Dibromoethane	ND		0.00054
Chlorobenzene	ND		0.00054
1,1,1,2-Tetrachloroethane	ND		0.00054
Bromoform	ND		0.00054
Bromobenzene	ND		0.00054
1,1,2,2-Tetrachloroethane	ND		0.00054
1,2,3-Trichloropropane	ND		0.00054
2-Chlorotoluene	ND		0.00054
4-Chlorotoluene	ND		0.00054
1,3-Dichlorobenzene	ND		0.00054
1,4-Dichlorobenzene	ND		0.00054
1,2-Dichlorobenzene	ND		0.00054
1,2-Dibromo-3-chloropropane	ND		0.0027
1,2,4-Trichlorobenzene	ND		0.00054
Hexachlorobutadiene	ND		0.0027
1,2,3-Trichlorobenzene	ND		0.00054

Surrogate	Percent Recovery	Control Limits
Dibromofluoromethane	101	71-126
Toluene, d8	100	73-130
4-Bromofluorobenzene	98	70-130

This report pertains to the samples analyzed in accordance with the chain of custody,
and is intended only for the use of the individual or company to whom it is addressed.

Date of Report: October 3, 2006
Samples Submitted: September 20, 2006
Laboratory Reference: 0609-149
Project: 663-010-010

HALOGENATED VOLATILES by EPA 8260B
page 1 of 2

Date Extracted: 9-27-06
Date Analyzed: 9-27-06

Matrix: Soil
Units: mg/kg (ppm)

Lab ID: 09-149-11
Client ID: SVE 18I-60.0

Compound	Results	Flags	PQL
Dichlorodifluoromethane	ND		0.00051
Chloromethane	ND		0.0026
Vinyl Chloride	ND		0.0026
Bromomethane	ND		0.00051
Chloroethane	ND		0.0026
Trichlorofluoromethane	ND		0.00051
1,1-Dichloroethene	ND		0.00051
Iodomethane	ND		0.0026
Methylene Chloride	ND		0.0026
(trans) 1,2-Dichloroethene	ND		0.00051
1,1-Dichloroethane	ND		0.00051
2,2-Dichloropropane	ND		0.00051
(cis) 1,2-Dichloroethene	ND		0.00051
Bromochloromethane	ND		0.00051
Chloroform	ND		0.00051
1,1,1-Trichloroethane	ND		0.00051
Carbon Tetrachloride	ND		0.00051
1,1-Dichloropropene	ND		0.00051
1,2-Dichloroethane	ND		0.00051
Trichloroethene	ND		0.00051
1,2-Dichloropropane	ND		0.00051
Dibromomethane	ND		0.00051
Bromodichloromethane	ND		0.00051
2-Chloroethyl Vinyl Ether	ND		0.0026
(cis) 1,3-Dichloropropene	ND		0.00051
(trans) 1,3-Dichloropropene	ND		0.00051

This report pertains to the samples analyzed in accordance with the chain of custody,
and is intended only for the use of the individual or company to whom it is addressed.

Date of Report: October 3, 2006
Samples Submitted: September 20, 2006
Laboratory Reference: 0609-149
Project: 663-010-010

HALOGENATED VOLATILES by EPA 8260B
page 2 of 2

Lab ID: 09-149-11
Client ID: SVE 18I-60.0

Compound	Results	Flags	PQL
1,1,2-Trichloroethane	ND		0.00051
Tetrachloroethene	ND		0.00051
1,3-Dichloropropane	ND		0.00051
Dibromochloromethane	ND		0.00051
1,2-Dibromoethane	ND		0.00051
Chlorobenzene	ND		0.00051
1,1,1,2-Tetrachloroethane	ND		0.00051
Bromoform	ND		0.00051
Bromobenzene	ND		0.00051
1,1,2,2-Tetrachloroethane	ND		0.00051
1,2,3-Trichloropropane	ND		0.00051
2-Chlorotoluene	ND		0.00051
4-Chlorotoluene	ND		0.00051
1,3-Dichlorobenzene	ND		0.00051
1,4-Dichlorobenzene	ND		0.00051
1,2-Dichlorobenzene	ND		0.00051
1,2-Dibromo-3-chloropropane	ND		0.0026
1,2,4-Trichlorobenzene	ND		0.00051
Hexachlorobutadiene	ND		0.0026
1,2,3-Trichlorobenzene	ND		0.00051

Surrogate	Percent Recovery	Control Limits
Dibromofluoromethane	95	71-126
Toluene, d8	98	73-130
4-Bromofluorobenzene	106	70-130

This report pertains to the samples analyzed in accordance with the chain of custody,
and is intended only for the use of the individual or company to whom it is addressed.

Date of Report: October 3, 2006
Samples Submitted: September 20, 2006
Laboratory Reference: 0609-149
Project: 663-010-010

HALOGENATED VOLATILES by EPA 8260B
METHOD BLANK QUALITY CONTROL
page 1 of 2

Date Extracted: 9-27-06
Date Analyzed: 9-27-06

Matrix: Soil
Units: mg/kg (ppm)

Lab ID: MB0927S1

Compound	Results	Flags	PQL
Dichlorodifluoromethane	ND		0.0010
Chloromethane	ND		0.0050
Vinyl Chloride	ND		0.0050
Bromomethane	ND		0.0010
Chloroethane	ND		0.0050
Trichlorofluoromethane	ND		0.0010
1,1-Dichloroethene	ND		0.0010
Iodomethane	ND		0.0050
Methylene Chloride	ND		0.0050
(trans) 1,2-Dichloroethene	ND		0.0010
1,1-Dichloroethane	ND		0.0010
2,2-Dichloropropane	ND		0.0010
(cis) 1,2-Dichloroethene	ND		0.0010
Bromochloromethane	ND		0.0010
Chloroform	ND		0.0010
1,1,1-Trichloroethane	ND		0.0010
Carbon Tetrachloride	ND		0.0010
1,1-Dichloropropene	ND		0.0010
1,2-Dichloroethane	ND		0.0010
Trichloroethene	ND		0.0010
1,2-Dichloropropane	ND		0.0010
Dibromomethane	ND		0.0010
Bromodichloromethane	ND		0.0010
2-Chloroethyl Vinyl Ether	ND		0.0050
(cis) 1,3-Dichloropropene	ND		0.0010
(trans) 1,3-Dichloropropene	ND		0.0010

This report pertains to the samples analyzed in accordance with the chain of custody,
and is intended only for the use of the individual or company to whom it is addressed.

Date of Report: October 3, 2006
Samples Submitted: September 20, 2006
Laboratory Reference: 0609-149
Project: 663-010-010

HALOGENATED VOLATILES by EPA 8260B
METHOD BLANK QUALITY CONTROL
page 2 of 2

Lab ID: MB0927S1

Compound	Results	Flags	PQL
1,1,2-Trichloroethane	ND		0.0010
Tetrachloroethene	ND		0.0010
1,3-Dichloropropane	ND		0.0010
Dibromochloromethane	ND		0.0010
1,2-Dibromoethane	ND		0.0010
Chlorobenzene	ND		0.0010
1,1,1,2-Tetrachloroethane	ND		0.0010
Bromoform	ND		0.0010
Bromobenzene	ND		0.0010
1,1,2,2-Tetrachloroethane	ND		0.0010
1,2,3-Trichloropropane	ND		0.0010
2-Chlorotoluene	ND		0.0010
4-Chlorotoluene	ND		0.0010
1,3-Dichlorobenzene	ND		0.0010
1,4-Dichlorobenzene	ND		0.0010
1,2-Dichlorobenzene	ND		0.0010
1,2-Dibromo-3-chloropropane	ND		0.0050
1,2,4-Trichlorobenzene	ND		0.0010
Hexachlorobutadiene	ND		0.0050
1,2,3-Trichlorobenzene	ND		0.0010

Surrogate	Percent Recovery	Control Limits
Dibromofluoromethane	101	71-126
Toluene, d8	111	73-130
4-Bromofluorobenzene	95	70-130

This report pertains to the samples analyzed in accordance with the chain of custody,
and is intended only for the use of the individual or company to whom it is addressed.

Date of Report: October 3, 2006
Samples Submitted: September 20, 2006
Laboratory Reference: 0609-149
Project: 663-010-010

HALOGENATED VOLATILES by EPA 8260B
SB/SBD QUALITY CONTROL

Date Extracted: 9-27-06
Date Analyzed: 9-27-06

Matrix: Soil
Units: mg/kg (ppm)

Lab ID: SB0927S1

Compound	Spike Amount	SB	Percent Recovery	SBD	Percent Recovery	Recovery Limits	Flags
1,1-Dichloroethene	0.0500	0.0454	91	0.0485	97	70-130	
Benzene	0.0500	0.0446	89	0.0449	90	70-130	
Trichloroethene	0.0500	0.0381	76	0.0395	79	70-130	
Toluene	0.0500	0.0442	88	0.0441	88	70-130	
Chlorobenzene	0.0500	0.0436	87	0.0449	90	70-130	

	RPD	RPD Limit	Flags
1,1-Dichloroethene	7	11	
Benzene	1	11	
Trichloroethene	3	13	
Toluene	0	11	
Chlorobenzene	3	12	

This report pertains to the samples analyzed in accordance with the chain of custody,
and is intended only for the use of the individual or company to whom it is addressed.

Date of Report: October 3, 2006
Samples Submitted: September 20, 2006
Laboratory Reference: 0609-149
Project: 663-010-010

% MOISTURE

Date Analyzed: 9-22-06

Client ID	Lab ID	% Moisture
SVE 18I-10.0-10.5	09-149-02	2
SVE 18I-30.0-30.5	09-149-06	9
SVE 18I-60.0	09-149-11	12

This report pertains to the samples analyzed in accordance with the chain of custody,
and is intended only for the use of the individual or company to whom it is addressed.

OnSite Environmental Inc.

Data Qualifiers and Abbreviations

A - Due to a high sample concentration, the amount spiked is insufficient for meaningful MS/MSD recovery data.

B - The analyte indicated was also found in the blank sample.

C - The duplicate RPD is outside control limits due to high result variability when analyte concentrations are within five times the quantitation limit.

E - The value reported exceeds the quantitation range and is an estimate.

F - Surrogate recovery data is not available due to the high concentration of coeluting target compounds.

G - Insufficient sample quantity for duplicate analysis.

H - The analyte indicated is a common laboratory solvent and may have been introduced during sample preparation, and be impacting the sample result.

I - Compound recovery is outside of the control limits.

J - The value reported was below the practical quantitation limit. The value is an estimate.

K - Sample duplicate RPD is outside control limits due to sample inhomogeneity. The sample was re-extracted and re-analyzed with similar results.

L - The RPD is outside of the control limits.

M - Hydrocarbons in the gasoline range (toluene-napthalene) are present in the sample.

O - Hydrocarbons indicative of diesel fuel are present in the sample and are impacting the gasoline result.

P - The RPD of the detected concentrations between the two columns is greater than 40.

Q - Surrogate recovery is outside of the control limits.

S - Surrogate recovery data is not available due to the necessary dilution of the sample.

T - The sample chromatogram is not similar to a typical _____.

U - The analyte was analyzed for, but was not detected above the reported sample quantitation limit.

V - Matrix Spike/Matrix Spike Duplicate recoveries are outside control limits due to matrix effects.

W - Matrix Spike/Matrix Spike Duplicate RPD are outside control limits due to matrix effects.

X - Sample extract treated with a silica gel cleanup procedure.

Y - Sample extract treated with an acid/silica gel cleanup procedure.

Z -

ND - Not Detected at PQL
PQL - Practical Quantitation Limit
RPD - Relative Percent Difference

This report pertains to the samples analyzed in accordance with the chain of custody, and is intended only for the use of the individual or company to whom it is addressed.

Chain of Custody

OnSite Environmental Inc.
14648 NE 95th Street • Redmond, WA 98052
Phone: (425) 883-3881 • Fax: (425) 885-4603

Company: Farallon Consulting, LLC
Project Number: 663-010-010
Project Name: Allison's Norge Village
Project Manager: Carla Brock
Sampled by: BDG

Turnaround Request (in working days)

(Check One)

- ☐ Same Day
- ☐ 1 Day
- ☐ 2 Day
- ☐ 3 Day
- ☒ Standard (7 working days) (TPH analysis 5 working days)
- ☐ _____ (other)

Laboratory Number: 09-149

Requested Analysis

Lab ID	Sample Identification	Date Sampled	Time Sampled	Matrix	# of Cont.	NWTPH-HCID	NWTPH-Gx/BTEX	NWTPH-Dx	Volatiles by 8260B	Halogenated Volatiles by 8260B	Semivolatiles by 8270C	PAHs by 8270C / SIM	PCBs by 8082	Pesticides by 8081A	Herbicides by 8151A	Total RCRA Metals (8)	TCLP Metals	HEM by 1664	VPH	EPH	% Moisture
1	SVE 18I - 4.5 - 5.0	9/19/06	07:55	Soil	4																
2	SVE 18I - 10.0 - 10.5		07:59							⊗											⊗
3	SVE 18I - 14.5 - 15.0		08:04																		
4	SVE 18I - 19.5 - 20.0		08:08																		
5	SVE 18I - 25.0 - 25.5		08:15																		
6	SVE 18I - 30.0 - 30.5		08:20							⊗											⊗
7	SVE 18I - 35.0 - 35.5		08:27																		
8	SVE 18I - 40.0		08:34																		
9	SVE 18I - 50.0		08:46																		
10	SVE 18I - 55.0		08:55																		

	Signature	Company	Date	Time
Relinquished by	(Brian D. Gouw)	Farallon	9/19/06	16:15
Received by			9/20/06	1100
Relinquished by				
Received by				
Relinquished by				
Received by				
Reviewed by/Date		Reviewed by/Date		

Comments/Special Instructions:

Hold for analysis as indicated by C. Brock.
E-mail result to cbrock@farallonconsulting.com
edd's eqis
⊗ Added 9/22/06. DB.

Chromatograms with final report ☐

DISTRIBUTION LEGEND: White - OnSite Copy Yellow - Report Copy Pink - Client Copy

Chain of Custody

OnSite Environmental Inc.
14648 NE 95th Street • Redmond, WA 98052
Phone: (425) 883-3881 • Fax: (425) 885-4603

Company: Farallon Consulting
Project Number: 663-010-010
Project Name: Allison's Norge Village
Project Manager: Carla Brock
Sampled by: BDS

Turnaround Request (in working days)

(Check One)

- ☐ Same Day
- ☐ 1 Day
- ☐ 2 Day
- ☐ 3 Day
- ☒ Standard (7 working days) (TPH analysis 5 working days)
- ☐ _____ (other)

Laboratory Number: 09-149

Requested Analysis

Lab ID	Sample Identification	Date Sampled	Time Sampled	Matrix	# of Cont.	NWTPH-HCID	NWTPH-Gx/BTEX	NWTPH-Dx	Volatiles by 8260B	Halogenated Volatiles by 8260B	Semivolatiles by 8270C	PAHs by 8270C / SIM	PCBs by 8082	Pesticides by 8081A	Herbicides by 8151A	Total RCRA Metals (8)	TCLP Metals	HEM by 1664	VPH	EPH	% Moisture
11	SVE 18I- 60.0	9/19/06	09:13	Soil	4					⊗											⊗
12	SVE 6I - 30.0-30.5		13:21																		
13	SVE 6I- 34.5-35.0		13:27																		
14	SVE 6I- 39.5-40.0		13:35																		
15	SVE 6I-44.5-45.0		13:43																		
16	SVE 6I- 50.0-50.5		13:52																		
17	SVE 6I- 55.0		13:59																		
18	SVE 6I- 60.0		14:15																		

	Signature	Company	Date	Time
Relinquished by	(Brian D. Govus)	Farallon	9/19/06	16:15
Received by			9/20/06	1100
Relinquished by				
Received by				
Relinquished by				
Received by				
Reviewed by/Date		Reviewed by/Date		

Comments/Special Instructions:

Hold for analysis as indicated by C.Brock.
E-mail results to cbrock@farallonconsulting.com
edds/equis.
⊗ Added 9/22/06 DB

Chromatograms with final report ☐

DISTRIBUTION LEGEND: White - OnSite Copy Yellow - Report Copy Pink - Client Copy

OnSite Environmental Inc.
14648 NE 95th Street, Redmond, WA 98052 • (425) 883-3881

October 3, 2006

Carla Brock
Farallon Consulting, LLC
975 5th Avenue NW
Issaquah, WA 98027

Re: Analytical Data for Project 663-010-010
Laboratory Reference No. 0609-132B

Dear Carla:

Enclosed are the analytical results and associated quality control data for samples submitted on September 19, 2006.

The standard policy of OnSite Environmental Inc. is to store your samples for 30 days from the date of receipt. If you require longer storage, please contact the laboratory.

We appreciate the opportunity to be of service to you on this project. If you have any questions concerning the data, or need additional information, please feel free to call me.

Sincerely,

David Baumeister
Project Manager

Enclosures

This report pertains to the samples analyzed in accordance with the chain of custody, and is intended only for the use of the individual or company to whom it is addressed.

Date of Report: October 3, 2006
Samples Submitted: September 19, 2006
Laboratory Reference: 0609-132B
Project: 663-010-010

Case Narrative

Samples were collected on September 18, 2006 and received by the laboratory on September 19, 2006. They were maintained at the laboratory at a temperature of 2°C to 6°C except as noted below.

General QA/QC issues associated with the analytical data enclosed in this laboratory report will be indicated with a reference to a comment or explanation on the Data Qualifier page. More complex and involved QA/QC issues will be discussed in detail below.

Halogenated Volatiles EPA 8260B Analysis

Per EPA Method 5035A, samples were received by the laboratory in pre-weighed 40 mL VOA vials within 48 hours of sample collection. They were stored in a freezer at between -7°C and -20°C until extraction or analysis.

Any other QA/QC issues associated with this extraction and analysis will be indicated with a footnote reference and discussed in detail on the Data Qualifier page.

This report pertains to the samples analyzed in accordance with the chain of custody, and is intended only for the use of the individual or company to whom it is addressed.

Date of Report: October 3, 2006
Samples Submitted: September 19, 2006
Laboratory Reference: 0609-132B
Project: 663-010-010

HALOGENATED VOLATILES by EPA 8260B
page 1 of 2

Date Extracted: 9-28-06
Date Analyzed: 9-28-06

Matrix: Soil
Units: mg/kg (ppm)

Lab ID: 09-132-02
Client ID: SVE 16I-19.5-20.0

Compound	Results	Flags	PQL
Dichlorodifluoromethane	ND		0.00059
Chloromethane	ND		0.0030
Vinyl Chloride	ND		0.0030
Bromomethane	ND		0.00059
Chloroethane	ND		0.0030
Trichlorofluoromethane	ND		0.00059
1,1-Dichloroethene	ND		0.00059
Iodomethane	ND		0.0030
Methylene Chloride	ND		0.0030
(trans) 1,2-Dichloroethene	ND		0.00059
1,1-Dichloroethane	ND		0.00059
2,2-Dichloropropane	ND		0.00059
(cis) 1,2-Dichloroethene	ND		0.00059
Bromochloromethane	ND		0.00059
Chloroform	ND		0.00059
1,1,1-Trichloroethane	ND		0.00059
Carbon Tetrachloride	ND		0.00059
1,1-Dichloropropene	ND		0.00059
1,2-Dichloroethane	ND		0.00059
Trichloroethene	ND		0.00059
1,2-Dichloropropane	ND		0.00059
Dibromomethane	ND		0.00059
Bromodichloromethane	ND		0.00059
2-Chloroethyl Vinyl Ether	ND		0.0030
(cis) 1,3-Dichloropropene	ND		0.00059
(trans) 1,3-Dichloropropene	ND		0.00059

This report pertains to the samples analyzed in accordance with the chain of custody,
and is intended only for the use of the individual or company to whom it is addressed.

Date of Report: October 3, 2006
Samples Submitted: September 19, 2006
Laboratory Reference: 0609-132B
Project: 663-010-010

HALOGENATED VOLATILES by EPA 8260B
page 2 of 2

Lab ID: 09-132-02
Client ID: SVE 16I-19.5-20.0

Compound	**Results**	**Flags**	**PQL**
1,1,2-Trichloroethane	ND		0.00059
Tetrachloroethene	0.091		0.00059
1,3-Dichloropropane	ND		0.00059
Dibromochloromethane	ND		0.00059
1,2-Dibromoethane	ND		0.00059
Chlorobenzene	ND		0.00059
1,1,1,2-Tetrachloroethane	ND		0.00059
Bromoform	ND		0.00059
Bromobenzene	ND		0.00059
1,1,2,2-Tetrachloroethane	ND		0.00059
1,2,3-Trichloropropane	ND		0.00059
2-Chlorotoluene	ND		0.00059
4-Chlorotoluene	ND		0.00059
1,3-Dichlorobenzene	ND		0.00059
1,4-Dichlorobenzene	ND		0.00059
1,2-Dichlorobenzene	ND		0.00059
1,2-Dibromo-3-chloropropane	ND		0.0030
1,2,4-Trichlorobenzene	ND		0.00059
Hexachlorobutadiene	ND		0.0030
1,2,3-Trichlorobenzene	ND		0.00059

Surrogate	**Percent Recovery**	**Control Limits**
Dibromofluoromethane	82	71-126
Toluene, d8	75	73-130
4-Bromofluorobenzene	83	70-130

This report pertains to the samples analyzed in accordance with the chain of custody,
and is intended only for the use of the individual or company to whom it is addressed.

Date of Report: October 3, 2006
Samples Submitted: September 19, 2006
Laboratory Reference: 0609-132B
Project: 663-010-010

HALOGENATED VOLATILES by EPA 8260B
page 1 of 2

Date Extracted: 9-27-06
Date Analyzed: 9-27-06

Matrix: Soil
Units: mg/kg (ppm)

Lab ID: 09-132-04
Client ID: SVE 16I-30.0-30.5

Compound	Results	Flags	PQL
Dichlorodifluoromethane	ND		0.00064
Chloromethane	ND		0.0032
Vinyl Chloride	ND		0.0032
Bromomethane	ND		0.00064
Chloroethane	ND		0.0032
Trichlorofluoromethane	ND		0.00064
1,1-Dichloroethene	ND		0.00064
Iodomethane	ND		0.0032
Methylene Chloride	ND		0.0032
(trans) 1,2-Dichloroethene	ND		0.00064
1,1-Dichloroethane	ND		0.00064
2,2-Dichloropropane	ND		0.00064
(cis) 1,2-Dichloroethene	ND		0.00064
Bromochloromethane	ND		0.00064
Chloroform	ND		0.00064
1,1,1-Trichloroethane	ND		0.00064
Carbon Tetrachloride	ND		0.00064
1,1-Dichloropropene	ND		0.00064
1,2-Dichloroethane	ND		0.00064
Trichloroethene	ND		0.00064
1,2-Dichloropropane	ND		0.00064
Dibromomethane	ND		0.00064
Bromodichloromethane	ND		0.00064
2-Chloroethyl Vinyl Ether	ND		0.0032
(cis) 1,3-Dichloropropene	ND		0.00064
(trans) 1,3-Dichloropropene	ND		0.00064

This report pertains to the samples analyzed in accordance with the chain of custody,
and is intended only for the use of the individual or company to whom it is addressed.

Date of Report: October 3, 2006
Samples Submitted: September 19, 2006
Laboratory Reference: 0609-132B
Project: 663-010-010

HALOGENATED VOLATILES by EPA 8260B
page 2 of 2

Lab ID: 09-132-04
Client ID: SVE 16I-30.0-30.5

Compound	**Results**	**Flags**	**PQL**
1,1,2-Trichloroethane	ND		0.00064
Tetrachloroethene	0.028		0.00064
1,3-Dichloropropane	ND		0.00064
Dibromochloromethane	ND		0.00064
1,2-Dibromoethane	ND		0.00064
Chlorobenzene	ND		0.00064
1,1,1,2-Tetrachloroethane	ND		0.00064
Bromoform	ND		0.00064
Bromobenzene	ND		0.00064
1,1,2,2-Tetrachloroethane	ND		0.00064
1,2,3-Trichloropropane	ND		0.00064
2-Chlorotoluene	ND		0.00064
4-Chlorotoluene	ND		0.00064
1,3-Dichlorobenzene	ND		0.00064
1,4-Dichlorobenzene	ND		0.00064
1,2-Dichlorobenzene	ND		0.00064
1,2-Dibromo-3-chloropropane	ND		0.0032
1,2,4-Trichlorobenzene	ND		0.00064
Hexachlorobutadiene	ND		0.0032
1,2,3-Trichlorobenzene	ND		0.00064

Surrogate	**Percent Recovery**	**Control Limits**
Dibromofluoromethane	104	71-126
Toluene, d8	107	73-130
4-Bromofluorobenzene	94	70-130

This report pertains to the samples analyzed in accordance with the chain of custody,
and is intended only for the use of the individual or company to whom it is addressed.

Date of Report: October 3, 2006
Samples Submitted: September 19, 2006
Laboratory Reference: 0609-132B
Project: 663-010-010

HALOGENATED VOLATILES by EPA 8260B
page 1 of 2

Date Extracted: 9-27-06
Date Analyzed: 9-27-06

Matrix: Soil
Units: mg/kg (ppm)

Lab ID: 09-132-06
Client ID: SVE 17S-5.0-5.5

Compound	Results	Flags	PQL
Dichlorodifluoromethane	ND		0.00071
Chloromethane	ND		0.0035
Vinyl Chloride	ND		0.0035
Bromomethane	ND		0.00071
Chloroethane	ND		0.0035
Trichlorofluoromethane	ND		0.00071
1,1-Dichloroethene	ND		0.00071
Iodomethane	ND		0.0035
Methylene Chloride	ND		0.0035
(trans) 1,2-Dichloroethene	ND		0.00071
1,1-Dichloroethane	ND		0.00071
2,2-Dichloropropane	ND		0.00071
(cis) 1,2-Dichloroethene	ND		0.00071
Bromochloromethane	ND		0.00071
Chloroform	ND		0.00071
1,1,1-Trichloroethane	ND		0.00071
Carbon Tetrachloride	ND		0.00071
1,1-Dichloropropene	ND		0.00071
1,2-Dichloroethane	ND		0.00071
Trichloroethene	ND		0.00071
1,2-Dichloropropane	ND		0.00071
Dibromomethane	ND		0.00071
Bromodichloromethane	ND		0.00071
2-Chloroethyl Vinyl Ether	ND		0.0035
(cis) 1,3-Dichloropropene	ND		0.00071
(trans) 1,3-Dichloropropene	ND		0.00071

This report pertains to the samples analyzed in accordance with the chain of custody,
and is intended only for the use of the individual or company to whom it is addressed.

Date of Report: October 3, 2006
Samples Submitted: September 19, 2006
Laboratory Reference: 0609-132B
Project: 663-010-010

HALOGENATED VOLATILES by EPA 8260B
page 2 of 2

Lab ID: 09-132-06
Client ID: SVE 17S-5.0-5.5

Compound	Results	Flags	PQL
1,1,2-Trichloroethane	ND		0.00071
Tetrachloroethene	0.026		0.00071
1,3-Dichloropropane	ND		0.00071
Dibromochloromethane	ND		0.00071
1,2-Dibromoethane	ND		0.00071
Chlorobenzene	ND		0.00071
1,1,1,2-Tetrachloroethane	ND		0.00071
Bromoform	ND		0.00071
Bromobenzene	ND		0.00071
1,1,2,2-Tetrachloroethane	ND		0.00071
1,2,3-Trichloropropane	ND		0.00071
2-Chlorotoluene	ND		0.00071
4-Chlorotoluene	ND		0.00071
1,3-Dichlorobenzene	ND		0.00071
1,4-Dichlorobenzene	ND		0.00071
1,2-Dichlorobenzene	ND		0.00071
1,2-Dibromo-3-chloropropane	ND		0.0035
1,2,4-Trichlorobenzene	ND		0.00071
Hexachlorobutadiene	ND		0.0035
1,2,3-Trichlorobenzene	ND		0.00071

Surrogate	Percent Recovery	Control Limits
Dibromofluoromethane	90	71-126
Toluene, d8	108	73-130
4-Bromofluorobenzene	95	70-130

This report pertains to the samples analyzed in accordance with the chain of custody,
and is intended only for the use of the individual or company to whom it is addressed.

Date of Report: October 3, 2006
Samples Submitted: September 19, 2006
Laboratory Reference: 0609-132B
Project: 663-010-010

HALOGENATED VOLATILES by EPA 8260B
METHOD BLANK QUALITY CONTROL
page 1 of 2

Date Extracted: 9-27-06
Date Analyzed: 9-27-06

Matrix: Soil
Units: mg/kg (ppm)

Lab ID: MB0927S1

Compound	Results	Flags	PQL
Dichlorodifluoromethane	ND		0.0010
Chloromethane	ND		0.0050
Vinyl Chloride	ND		0.0050
Bromomethane	ND		0.0010
Chloroethane	ND		0.0050
Trichlorofluoromethane	ND		0.0010
1,1-Dichloroethene	ND		0.0010
Iodomethane	ND		0.0050
Methylene Chloride	ND		0.0050
(trans) 1,2-Dichloroethene	ND		0.0010
1,1-Dichloroethane	ND		0.0010
2,2-Dichloropropane	ND		0.0010
(cis) 1,2-Dichloroethene	ND		0.0010
Bromochloromethane	ND		0.0010
Chloroform	ND		0.0010
1,1,1-Trichloroethane	ND		0.0010
Carbon Tetrachloride	ND		0.0010
1,1-Dichloropropene	ND		0.0010
1,2-Dichloroethane	ND		0.0010
Trichloroethene	ND		0.0010
1,2-Dichloropropane	ND		0.0010
Dibromomethane	ND		0.0010
Bromodichloromethane	ND		0.0010
2-Chloroethyl Vinyl Ether	ND		0.0050
(cis) 1,3-Dichloropropene	ND		0.0010
(trans) 1,3-Dichloropropene	ND		0.0010

This report pertains to the samples analyzed in accordance with the chain of custody,
and is intended only for the use of the individual or company to whom it is addressed.

Date of Report: October 3, 2006
Samples Submitted: September 19, 2006
Laboratory Reference: 0609-132B
Project: 663-010-010

HALOGENATED VOLATILES by EPA 8260B
METHOD BLANK QUALITY CONTROL
page 2 of 2

Lab ID: MB0927S1

Compound	Results	Flags	PQL
1,1,2-Trichloroethane	ND		0.0010
Tetrachloroethene	ND		0.0010
1,3-Dichloropropane	ND		0.0010
Dibromochloromethane	ND		0.0010
1,2-Dibromoethane	ND		0.0010
Chlorobenzene	ND		0.0010
1,1,1,2-Tetrachloroethane	ND		0.0010
Bromoform	ND		0.0010
Bromobenzene	ND		0.0010
1,1,2,2-Tetrachloroethane	ND		0.0010
1,2,3-Trichloropropane	ND		0.0010
2-Chlorotoluene	ND		0.0010
4-Chlorotoluene	ND		0.0010
1,3-Dichlorobenzene	ND		0.0010
1,4-Dichlorobenzene	ND		0.0010
1,2-Dichlorobenzene	ND		0.0010
1,2-Dibromo-3-chloropropane	ND		0.0050
1,2,4-Trichlorobenzene	ND		0.0010
Hexachlorobutadiene	ND		0.0050
1,2,3-Trichlorobenzene	ND		0.0010

Surrogate	Percent Recovery	Control Limits
Dibromofluoromethane	101	71-126
Toluene, d8	111	73-130
4-Bromofluorobenzene	95	70-130

This report pertains to the samples analyzed in accordance with the chain of custody,
and is intended only for the use of the individual or company to whom it is addressed.

Date of Report: October 3, 2006
Samples Submitted: September 19, 2006
Laboratory Reference: 0609-132B
Project: 663-010-010

HALOGENATED VOLATILES by EPA 8260B
METHOD BLANK QUALITY CONTROL
page 1 of 2

Date Extracted: 9-28-06
Date Analyzed: 9-28-06

Matrix: Soil
Units: mg/kg (ppm)

Lab ID: MB0928S1

Compound	Results	Flags	PQL
Dichlorodifluoromethane	0.0023		0.0010
Chloromethane	ND		0.0050
Vinyl Chloride	ND		0.0050
Bromomethane	ND		0.0010
Chloroethane	ND		0.0050
Trichlorofluoromethane	ND		0.0010
1,1-Dichloroethene	ND		0.0010
Iodomethane	ND		0.0050
Methylene Chloride	ND		0.0050
(trans) 1,2-Dichloroethene	ND		0.0010
1,1-Dichloroethane	ND		0.0010
2,2-Dichloropropane	ND		0.0010
(cis) 1,2-Dichloroethene	ND		0.0010
Bromochloromethane	ND		0.0010
Chloroform	ND		0.0010
1,1,1-Trichloroethane	ND		0.0010
Carbon Tetrachloride	ND		0.0010
1,1-Dichloropropene	ND		0.0010
1,2-Dichloroethane	ND		0.0010
Trichloroethene	ND		0.0010
1,2-Dichloropropane	ND		0.0010
Dibromomethane	ND		0.0010
Bromodichloromethane	ND		0.0010
2-Chloroethyl Vinyl Ether	ND		0.0050
(cis) 1,3-Dichloropropene	ND		0.0010
(trans) 1,3-Dichloropropene	ND		0.0010

This report pertains to the samples analyzed in accordance with the chain of custody,
and is intended only for the use of the individual or company to whom it is addressed.

Date of Report: October 3, 2006
Samples Submitted: September 19, 2006
Laboratory Reference: 0609-132B
Project: 663-010-010

HALOGENATED VOLATILES by EPA 8260B
METHOD BLANK QUALITY CONTROL
page 2 of 2

Lab ID: MB0928S1

Compound	Results	Flags	PQL
1,1,2-Trichloroethane	ND		0.0010
Tetrachloroethene	ND		0.0010
1,3-Dichloropropane	ND		0.0010
Dibromochloromethane	ND		0.0010
1,2-Dibromoethane	ND		0.0010
Chlorobenzene	ND		0.0010
1,1,1,2-Tetrachloroethane	ND		0.0010
Bromoform	ND		0.0010
Bromobenzene	ND		0.0010
1,1,2,2-Tetrachloroethane	ND		0.0010
1,2,3-Trichloropropane	ND		0.0010
2-Chlorotoluene	ND		0.0010
4-Chlorotoluene	ND		0.0010
1,3-Dichlorobenzene	ND		0.0010
1,4-Dichlorobenzene	ND		0.0010
1,2-Dichlorobenzene	ND		0.0010
1,2-Dibromo-3-chloropropane	ND		0.0050
1,2,4-Trichlorobenzene	ND		0.0010
Hexachlorobutadiene	ND		0.0050
1,2,3-Trichlorobenzene	ND		0.0010

Surrogate	Percent Recovery	Control Limits
Dibromofluoromethane	75	71-126
Toluene, d8	84	73-130
4-Bromofluorobenzene	90	70-130

This report pertains to the samples analyzed in accordance with the chain of custody,
and is intended only for the use of the individual or company to whom it is addressed.

Date of Report: October 3, 2006
Samples Submitted: September 19, 2006
Laboratory Reference: 0609-132B
Project: 663-010-010

HALOGENATED VOLATILES by EPA 8260B
SB/SBD QUALITY CONTROL

Date Extracted: 9-27-06
Date Analyzed: 9-27-06

Matrix: Soil
Units: mg/kg (ppm)

Lab ID: SB0927S1

Compound	Spike Amount	SB	Percent Recovery	SBD	Percent Recovery	Recovery Limits	Flags
1,1-Dichloroethene	0.0500	0.0454	91	0.0485	97	70-130	
Benzene	0.0500	0.0446	89	0.0449	90	70-130	
Trichloroethene	0.0500	0.0381	76	0.0395	79	70-130	
Toluene	0.0500	0.0442	88	0.0441	88	70-130	
Chlorobenzene	0.0500	0.0436	87	0.0449	90	70-130	

	RPD	RPD Limit	Flags
1,1-Dichloroethene	7	11	
Benzene	1	11	
Trichloroethene	3	13	
Toluene	0	11	
Chlorobenzene	3	12	

This report pertains to the samples analyzed in accordance with the chain of custody,
and is intended only for the use of the individual or company to whom it is addressed.

Date of Report: October 3, 2006
Samples Submitted: September 19, 2006
Laboratory Reference: 0609-132B
Project: 663-010-010

HALOGENATED VOLATILES by EPA 8260B
MS/MSD QUALITY CONTROL

Date Extracted: 9-28-06
Date Analyzed: 9-28-06

Matrix: Soil
Units: mg/kg (ppm)

Lab ID: 09-154-05

Compound	Sample Amount	Spike Amount	MS	Percent Recovery	MSD	Percent Recovery	Recovery Limits	Flags
1,1-Dichloroethene	ND	0.0500	0.0705	141	0.0658	132	53-141	
Benzene	ND	0.0500	0.0558	112	0.0551	110	66-135	
Trichloroethene	ND	0.0500	0.0396	79	0.0410	82	69-130	
Toluene	ND	0.0500	0.0517	103	0.0568	114	72-127	
Chlorobenzene	ND	0.0500	0.0458	92	0.0441	88	68-134	

	RPD	RPD Limit	Flags
1,1-Dichloroethene	7	11	
Benzene	1	11	
Trichloroethene	3	13	
Toluene	9	11	
Chlorobenzene	4	12	

This report pertains to the samples analyzed in accordance with the chain of custody,
and is intended only for the use of the individual or company to whom it is addressed.

Date of Report: October 3, 2006
Samples Submitted: September 19, 2006
Laboratory Reference: 0609-132B
Project: 663-010-010

% MOISTURE

Date Analyzed: 9-22-06

Client ID	Lab ID	% Moisture
SVE 16I-19.5-20.0	09-132-02	17
SVE 16I-30.0-30.5	09-132-04	10
SVE 17S-5.0-5.5	09-132-06	14

This report pertains to the samples analyzed in accordance with the chain of custody,
and is intended only for the use of the individual or company to whom it is addressed.

OnSite Environmental Inc.

Data Qualifiers and Abbreviations

A - Due to a high sample concentration, the amount spiked is insufficient for meaningful MS/MSD recovery data.

B - The analyte indicated was also found in the blank sample.

C - The duplicate RPD is outside control limits due to high result variability when analyte concentrations are within five times the quantitation limit.

E - The value reported exceeds the quantitation range and is an estimate.

F - Surrogate recovery data is not available due to the high concentration of coeluting target compounds.

G - Insufficient sample quantity for duplicate analysis.

H - The analyte indicated is a common laboratory solvent and may have been introduced during sample preparation, and be impacting the sample result.

I - Compound recovery is outside of the control limits.

J - The value reported was below the practical quantitation limit. The value is an estimate.

K - Sample duplicate RPD is outside control limits due to sample inhomogeneity. The sample was re-extracted and re-analyzed with similar results.

L - The RPD is outside of the control limits.

M - Hydrocarbons in the gasoline range (toluene-napthalene) are present in the sample.

O - Hydrocarbons indicative of diesel fuel are present in the sample and are impacting the gasoline result.

P - The RPD of the detected concentrations between the two columns is greater than 40.

Q - Surrogate recovery is outside of the control limits.

S - Surrogate recovery data is not available due to the necessary dilution of the sample.

T - The sample chromatogram is not similar to a typical _____.

U - The analyte was analyzed for, but was not detected above the reported sample quantitation limit.

V - Matrix Spike/Matrix Spike Duplicate recoveries are outside control limits due to matrix effects.

W - Matrix Spike/Matrix Spike Duplicate RPD are outside control limits due to matrix effects.

X - Sample extract treated with a silica gel cleanup procedure.

Y - Sample extract treated with an acid/silica gel cleanup procedure.

Z -

ND - Not Detected at PQL
PQL - Practical Quantitation Limit
RPD - Relative Percent Difference

This report pertains to the samples analyzed in accordance with the chain of custody, and is intended only for the use of the individual or company to whom it is addressed.

Chain of Custody

Page 1 of 1

OnSite Environmental Inc.
14648 NE 95th Street • Redmond, WA 98052
Phone: (425) 883-3881 • Fax: (425) 885-4603

Company: Farallon Consulting, LLC
Project Number: 663-010-010
Project Name: Allison's Norge Village
Project Manager: Carla Brock
Sampled by: BDG

Turnaround Request (in working days)

(Check One)

- ☐ Same Day ☐ 1 Day
- ☐ 2 Day ☐ 3 Day
- ☒ Standard (7 working days) (TPH analysis 5 working days)
- ☐ _____ (other)

Laboratory Number: 09-132

Requested Analysis

Lab ID	Sample Identification	Date Sampled	Time Sampled	Matrix	# of Cont.	NWTPH-HCID	NWTPH-Gx/BTEX	NWTPH-Dx	Volatiles by 8260B	Halogenated Volatiles by 8260B	Semivolatiles by 8270C	PAHs by 8270C / SIM	PCBs by 8082	Pesticides by 8081A	Herbicides by 8151A	Total RCRA Metals (8)	TCLP Metals	HEM by 1664	VPH	EPH	% Moisture
1	SVE16I-15.0-15.5	9/18/06	11:30	Soil	4					X											X
2	SVE16I-19.5-20.0		11:38							●											●
3	SVE16I-24.5-25.0		11:48							●											
4	SVE16I-30.0-30.5		12:00							●											●
5	SVE16I-35.0-35.0		12:09							●											
6	SVE17S-5.0-5.5	9/18/06	15:52	Soil	4					●											●
7	SVE17S-10.0-10.5		16:00							●											
8	SVE17S-15.0-15.5		16:08							●											
9	SVE17S-19.5-20.0		16:16							●											

Hold

BDG

	Signature	Company	Date	Time
Relinquished by	(Brian D. Gouran)	Farallon	9/18/06	16:45
Received by		0825	9/19/06	1100
Relinquished by				
Received by				
Relinquished by				
Received by				
Reviewed by/Date		Reviewed by/Date		

Comments/Special Instructions:
e-mail results & EQuIS edds to cbrock@farallonconsulting.com
Hold until notified for analysis
● Added 9/22/06. DB.

Chromatograms with final report ☐

DISTRIBUTION LEGEND: White - OnSite Copy Yellow - Report Copy Pink - Client Copy

OnSite Environmental Inc.
14648 NE 95th Street, Redmond, WA 98052 • (425) 883-3881

September 21, 2006

Carla Brock
Farallon Consulting, LLC
320 3rd Avenue NE, Suite 200
Issaquah, WA 98027

Re: Analytical Data for Project 663-010-010
Laboratory Reference No. 0609-132

Dear Carla:

Enclosed are the analytical results and associated quality control data for samples submitted on September 19, 2006.

The standard policy of OnSite Environmental Inc. is to store your samples for 30 days from the date of receipt. If you require longer storage, please contact the laboratory.

We appreciate the opportunity to be of service to you on this project. If you have any questions concerning the data, or need additional information, please feel free to call me.

Sincerely,

David Baumeister
Project Manager

Enclosures

This report pertains to the samples analyzed in accordance with the chain of custody, and is intended only for the use of the individual or company to whom it is addressed.

Date of Report: September 21, 2006
Samples Submitted: September 19, 2006
Laboratory Reference: 0609-132
Project: 663-010-010

Case Narrative

Samples were collected on September 18, 2006 and received by the laboratory on September 19, 2006. They were maintained at the laboratory at a temperature of 2°C to 6°C except as noted below.

General QA/QC issues associated with the analytical data enclosed in this laboratory report will be indicated with a reference to a comment or explanation on the Data Qualifier page. More complex and involved QA/QC issues will be discussed in detail below.

Halogenated Volatiles EPA 8260B Analysis

Per EPA Method 5035A, samples were received by the laboratory in pre-weighed 40 mL VOA vials within 48 hours of sample collection. They were stored in a freezer at between -7°C and -20°C until extraction or analysis.

Any other QA/QC issues associated with this extraction and analysis will be indicated with a footnote reference and discussed in detail on the Data Qualifier page.

This report pertains to the samples analyzed in accordance with the chain of custody,
and is intended only for the use of the individual or company to whom it is addressed.

Date of Report: September 21, 2006
Samples Submitted: September 19, 2006
Laboratory Reference: 0609-132
Project: 663-010-010

HALOGENATED VOLATILES by EPA 8260B

Date Extracted: 9-19-06
Date Analyzed: 9-19-06

Matrix: Soil
Units: mg/kg (ppm)

Lab ID: 09-132-01
Client ID: SVE16I-15.0-15.5

Compound	Results	Flags	PQL
Dichlorodifluoromethane	ND		0.00067
Chloromethane	ND		0.0034
Vinyl Chloride	ND		0.00067
Bromomethane	ND		0.00067
Chloroethane	ND		0.0034
Trichlorofluoromethane	ND		0.00067
1,1-Dichloroethene	ND		0.00067
Iodomethane	ND		0.0034
Methylene Chloride	ND		0.0034
(trans) 1,2-Dichloroethene	ND		0.00067
1,1-Dichloroethane	ND		0.00067
2,2-Dichloropropane	ND		0.00067
(cis) 1,2-Dichloroethene	ND		0.00067
Bromochloromethane	ND		0.00067
Chloroform	ND		0.00067
1,1,1-Trichloroethane	ND		0.00067
Carbon Tetrachloride	ND		0.00067
1,1-Dichloropropene	ND		0.00067
1,2-Dichloroethane	ND		0.00067
Trichloroethene	ND		0.00067
1,2-Dichloropropane	ND		0.00067
Dibromomethane	ND		0.00067
Bromodichloromethane	ND		0.00067
2-Chloroethyl Vinyl Ether	ND		0.0034
(cis) 1,3-Dichloropropene	ND		0.00067
(trans) 1,3-Dichloropropene	ND		0.00067

This report pertains to the samples analyzed in accordance with the chain of custody,
and is intended only for the use of the individual or company to whom it is addressed.

Date of Report: September 21, 2006
Samples Submitted: September 19, 2006
Laboratory Reference: 0609-132
Project: 663-010-010

HALOGENATED VOLATILES by EPA 8260B
page 2 of 2

Lab ID: 09-132-01
Client ID: SVE16I-15.0-15.5

Compound	Results	Flags	PQL
1,1,2-Trichloroethane	ND		0.00067
Tetrachloroethene	0.11		0.00067
1,3-Dichloropropane	ND		0.00067
Dibromochloromethane	ND		0.00067
1,2-Dibromoethane	ND		0.00067
Chlorobenzene	ND		0.00067
1,1,1,2-Tetrachloroethane	ND		0.00067
Bromoform	ND		0.00067
Bromobenzene	ND		0.00067
1,1,2,2-Tetrachloroethane	ND		0.00067
1,2,3-Trichloropropane	ND		0.00067
2-Chlorotoluene	ND		0.00067
4-Chlorotoluene	ND		0.00067
1,3-Dichlorobenzene	ND		0.00067
1,4-Dichlorobenzene	ND		0.00067
1,2-Dichlorobenzene	ND		0.00067
1,2-Dibromo-3-chloropropane	ND		0.0034
1,2,4-Trichlorobenzene	ND		0.00067
Hexachlorobutadiene	ND		0.0034
1,2,3-Trichlorobenzene	ND		0.00067

Surrogate	Percent Recovery	Control Limits
Dibromofluoromethane	84	71-126
Toluene, d8	91	73-130
4-Bromofluorobenzene	95	70-130

This report pertains to the samples analyzed in accordance with the chain of custody,
and is intended only for the use of the individual or company to whom it is addressed.

Date of Report: September 21, 2006
Samples Submitted: September 19, 2006
Laboratory Reference: 0609-132
Project: 663-010-010

HALOGENATED VOLATILES by EPA 8260B
METHOD BLANK QUALITY CONTROL
page 1 of 2

Date Extracted: 9-19-06
Date Analyzed: 9-19-06

Matrix: Soil
Units: mg/kg (ppm)

Lab ID: MB0919S1

Compound	Results	Flags	PQL
Dichlorodifluoromethane	ND		0.0010
Chloromethane	ND		0.0050
Vinyl Chloride	ND		0.0010
Bromomethane	ND		0.0010
Chloroethane	ND		0.0050
Trichlorofluoromethane	ND		0.0010
1,1-Dichloroethene	ND		0.0010
Iodomethane	ND		0.0050
Methylene Chloride	ND		0.0050
(trans) 1,2-Dichloroethene	ND		0.0010
1,1-Dichloroethane	ND		0.0010
2,2-Dichloropropane	ND		0.0010
(cis) 1,2-Dichloroethene	ND		0.0010
Bromochloromethane	ND		0.0010
Chloroform	ND		0.0010
1,1,1-Trichloroethane	ND		0.0010
Carbon Tetrachloride	ND		0.0010
1,1-Dichloropropene	ND		0.0010
1,2-Dichloroethane	ND		0.0010
Trichloroethene	ND		0.0010
1,2-Dichloropropane	ND		0.0010
Dibromomethane	ND		0.0010
Bromodichloromethane	ND		0.0010
2-Chloroethyl Vinyl Ether	ND		0.0050
(cis) 1,3-Dichloropropene	ND		0.0010
(trans) 1,3-Dichloropropene	ND		0.0010

This report pertains to the samples analyzed in accordance with the chain of custody,
and is intended only for the use of the individual or company to whom it is addressed.

Date of Report: September 21, 2006
Samples Submitted: September 19, 2006
Laboratory Reference: 0609-132
Project: 663-010-010

HALOGENATED VOLATILES by EPA 8260B
METHOD BLANK QUALITY CONTROL
page 2 of 2

Lab ID: MB0919S1

Compound	Results	Flags	PQL
1,1,2-Trichloroethane	ND		0.0010
Tetrachloroethene	ND		0.0010
1,3-Dichloropropane	ND		0.0010
Dibromochloromethane	ND		0.0010
1,2-Dibromoethane	ND		0.0010
Chlorobenzene	ND		0.0010
1,1,1,2-Tetrachloroethane	ND		0.0010
Bromoform	ND		0.0010
Bromobenzene	ND		0.0010
1,1,2,2-Tetrachloroethane	ND		0.0010
1,2,3-Trichloropropane	ND		0.0010
2-Chlorotoluene	ND		0.0010
4-Chlorotoluene	ND		0.0010
1,3-Dichlorobenzene	ND		0.0010
1,4-Dichlorobenzene	ND		0.0010
1,2-Dichlorobenzene	ND		0.0010
1,2-Dibromo-3-chloropropane	ND		0.0050
1,2,4-Trichlorobenzene	ND		0.0010
Hexachlorobutadiene	ND		0.0050
1,2,3-Trichlorobenzene	ND		0.0010

Surrogate	Percent Recovery	Control Limits
Dibromofluoromethane	83	71-126
Toluene, d8	93	73-130
4-Bromofluorobenzene	100	70-130

This report pertains to the samples analyzed in accordance with the chain of custody,
and is intended only for the use of the individual or company to whom it is addressed.

Date of Report: September 21, 2006
Samples Submitted: September 19, 2006
Laboratory Reference: 0609-132
Project: 663-010-010

HALOGENATED VOLATILES by EPA 8260B
SB/SBD QUALITY CONTROL

Date Extracted: 9-19-06
Date Analyzed: 9-19-06

Matrix: Soil
Units: mg/kg (ppm)

Lab ID: SB0919S1

Compound	Spike Amount	SB	Percent Recovery	SBD	Percent Recovery	Recovery Limits	Flags
1,1-Dichloroethene	0.0500	0.0527	105	0.0513	103	70-130	
Benzene	0.0500	0.0476	95	0.0482	96	70-130	
Trichloroethene	0.0500	0.0478	96	0.0459	92	70-130	
Toluene	0.0500	0.0530	106	0.0506	101	70-130	
Chlorobenzene	0.0500	0.0474	95	0.0457	91	70-130	

	RPD	RPD Limit	Flags
1,1-Dichloroethene	3	11	
Benzene	1	11	
Trichloroethene	4	13	
Toluene	5	11	
Chlorobenzene	4	12	

This report pertains to the samples analyzed in accordance with the chain of custody,
and is intended only for the use of the individual or company to whom it is addressed.

Date of Report: September 21, 2006
Samples Submitted: September 19, 2006
Laboratory Reference: 0609-132
Project: 663-010-010

% MOISTURE

Date Analyzed: 9-19-06

Client ID	Lab ID	% Moisture
SVE16I-15.0-15.5	09-132-01	3

This report pertains to the samples analyzed in accordance with the chain of custody,
and is intended only for the use of the individual or company to whom it is addressed.

OnSite Environmental Inc.

Data Qualifiers and Abbreviations

A - Due to a high sample concentration, the amount spiked is insufficient for meaningful MS/MSD recovery data.

B - The analyte indicated was also found in the blank sample.

C - The duplicate RPD is outside control limits due to high result variability when analyte concentrations are within five times the quantitation limit.

E - The value reported exceeds the quantitation range and is an estimate.

F - Surrogate recovery data is not available due to the high concentration of coeluting target compounds.

G - Insufficient sample quantity for duplicate analysis.

H - The analyte indicated is a common laboratory solvent and may have been introduced during sample preparation, and be impacting the sample result.

I - Compound recovery is outside of the control limits.

J - The value reported was below the practical quantitation limit. The value is an estimate.

K - Sample duplicate RPD is outside control limits due to sample inhomogeneity. The sample was re-extracted and re-analyzed with similar results.

L - The RPD is outside of the control limits.

M - Hydrocarbons in the gasoline range (toluene-napthalene) are present in the sample.

O - Hydrocarbons indicative of diesel fuel are present in the sample and are impacting the gasoline result.

P - The RPD of the detected concentrations between the two columns is greater than 40.

Q - Surrogate recovery is outside of the control limits.

S - Surrogate recovery data is not available due to the necessary dilution of the sample.

T - The sample chromatogram is not similar to a typical _____.

U - The analyte was analyzed for, but was not detected above the reported sample quantitation limit.

V - Matrix Spike/Matrix Spike Duplicate recoveries are outside control limits due to matrix effects.

W - Matrix Spike/Matrix Spike Duplicate RPD are outside control limits due to matrix effects.

X - Sample extract treated with a silica gel cleanup procedure.

Y - Sample extract treated with an acid/silica gel cleanup procedure.

Z -

ND - Not Detected at PQL
PQL - Practical Quantitation Limit
RPD - Relative Percent Difference

This report pertains to the samples analyzed in accordance with the chain of custody, and is intended only for the use of the individual or company to whom it is addressed.

Chain of Custody

Page 1 of 1

OnSite Environmental Inc.
14648 NE 95th Street • Redmond, WA 98052
Phone: (425) 883-3881 • Fax: (425) 885-4603

Company: Farallon Consulting, LLC
Project Number: 663-010-010
Project Name: Allison's Norge Village
Project Manager: Carla Brock
Sampled by: BDG

Turnaround Request (in working days)

(Check One)

- ☐ Same Day
- ☐ 1 Day
- ☐ 2 Day
- ☐ 3 Day
- ☒ Standard (7 working days) (TPH analysis 5 working days)
- ☐ _____ (other)

Laboratory Number: 09-132

Requested Analysis

Lab ID	Sample Identification	Date Sampled	Time Sampled	Matrix	# of Cont.	NWTPH-HCID	NWTPH-Gx/BTEX	NWTPH-Dx	Volatiles by 8260B	Halogenated Volatiles by 8260B	Semivolatiles by 8270C	PAHs by 8270C / SIM	PCBs by 8082	Pesticides by 8081A	Herbicides by 8151A	Total RCRA Metals (8)	TCLP Metals	HEM by 1664	VPH	EPH	% Moisture
1	SVE 16I-15.0-15.5	9/18/06	11:30	Soil	4					X											X
2	SVE 16I-19.5-20.0		11:38																		
3	SVE 16I-24.5-25.0		11:48																		
4	SVE 16I-30.0-30.5		12:00																		
5	SVE 16I-35.0-35.0		12:09																		
6	SVE 17S-5.0-5.5	9/18/06	15:52	Soil	4																
7	SVE 17S-10.0-10.5		16:00																		
8	SVE 17S-15.0-15.5		16:08																		
9	SVE 17S-19.5-20.0		16:16																		
		BDG																			

HOLD Hold

	Signature	Company	Date	Time
Relinquished by	(Brian D. Gouran)	Farallon	9/18/06	16:45
Received by		0825	9/19/06	1100
Relinquished by				
Received by				
Relinquished by				
Received by				
Reviewed by/Date		Reviewed by/Date		

Comments/Special Instructions:
e-mail results + egis edds to cbrock@farallonconsulting.com
Hold until notified for analysis

Chromatograms with final report ☐

DISTRIBUTION LEGEND: White - OnSite Copy Yellow - Report Copy Pink - Client Copy

OnSite Environmental Inc.
14648 NE 95th Street, Redmond, WA 98052 • (425) 883-3881

October 4, 2006

Carla Brock
Farallon Consulting, LLC
975 5th Avenue NW
Issaquah, WA 98027

Re: Analytical Data for Project 663-010-010
Laboratory Reference No. 0609-123

Dear Carla:

Enclosed are the analytical results and associated quality control data for samples submitted on September 18, 2006.

The standard policy of OnSite Environmental Inc. is to store your samples for 30 days from the date of receipt. If you require longer storage, please contact the laboratory.

We appreciate the opportunity to be of service to you on this project. If you have any questions concerning the data, or need additional information, please feel free to call me.

Sincerely,

David Baumeister
Project Manager

Enclosures

This report pertains to the samples analyzed in accordance with the chain of custody, and is intended only for the use of the individual or company to whom it is addressed.

Date of Report: October 4, 2006
Samples Submitted: September 18, 2006
Laboratory Reference: 0609-123
Project: 663-010-010

Case Narrative

Samples were collected on September 14 and 15, 2006 and received by the laboratory on September 18, 2006. They were maintained at the laboratory at a temperature of 2°C to 6°C except as noted below.

General QA/QC issues associated with the analytical data enclosed in this laboratory report will be indicated with a reference to a comment or explanation on the Data Qualifier page. More complex and involved QA/QC issues will be discussed in detail below.

Halogenated Volatiles EPA 8260B Analysis

Per EPA Method 5035A, samples were received by the laboratory in pre-weighed 40 mL VOA vials within 48 hours of sample collection. They were stored in a freezer at between -7°C and -20°C until extraction or analysis.

Any other QA/QC issues associated with this extraction and analysis will be indicated with a footnote reference and discussed in detail on the Data Qualifier page.

This report pertains to the samples analyzed in accordance with the chain of custody,
and is intended only for the use of the individual or company to whom it is addressed.

Date of Report: October 4, 2006
Samples Submitted: September 18, 2006
Laboratory Reference: 0609-123
Project: 663-010-010

HALOGENATED VOLATILES by EPA 8260B
page 1 of 2

Date Extracted: 9-27-06
Date Analyzed: 9-27-06

Matrix: Soil
Units: mg/kg (ppm)

Lab ID: 09-123-05
Client ID: IDW-SP-04

Compound	Results	Flags	PQL
Dichlorodifluoromethane	ND		0.00064
Chloromethane	ND		0.0032
Vinyl Chloride	ND		0.0032
Bromomethane	ND		0.00064
Chloroethane	ND		0.0032
Trichlorofluoromethane	ND		0.00064
1,1-Dichloroethene	ND		0.00064
Iodomethane	ND		0.0032
Methylene Chloride	ND		0.0032
(trans) 1,2-Dichloroethene	ND		0.00064
1,1-Dichloroethane	ND		0.00064
2,2-Dichloropropane	ND		0.00064
(cis) 1,2-Dichloroethene	ND		0.00064
Bromochloromethane	ND		0.00064
Chloroform	ND		0.00064
1,1,1-Trichloroethane	ND		0.00064
Carbon Tetrachloride	ND		0.00064
1,1-Dichloropropene	ND		0.00064
1,2-Dichloroethane	ND		0.00064
Trichloroethene	ND		0.00064
1,2-Dichloropropane	ND		0.00064
Dibromomethane	ND		0.00064
Bromodichloromethane	ND		0.00064
2-Chloroethyl Vinyl Ether	ND		0.0032
(cis) 1,3-Dichloropropene	ND		0.00064
(trans) 1,3-Dichloropropene	ND		0.00064

This report pertains to the samples analyzed in accordance with the chain of custody,
and is intended only for the use of the individual or company to whom it is addressed.

Date of Report: October 4, 2006
Samples Submitted: September 18, 2006
Laboratory Reference: 0609-123
Project: 663-010-010

HALOGENATED VOLATILES by EPA 8260B
page 2 of 2

Lab ID: 09-123-05
Client ID: IDW-SP-04

Compound	Results	Flags	PQL
1,1,2-Trichloroethane	ND		0.00064
Tetrachloroethene	0.051		0.00064
1,3-Dichloropropane	ND		0.00064
Dibromochloromethane	ND		0.00064
1,2-Dibromoethane	ND		0.00064
Chlorobenzene	ND		0.00064
1,1,1,2-Tetrachloroethane	ND		0.00064
Bromoform	ND		0.00064
Bromobenzene	ND		0.00064
1,1,2,2-Tetrachloroethane	ND		0.00064
1,2,3-Trichloropropane	ND		0.00064
2-Chlorotoluene	ND		0.00064
4-Chlorotoluene	ND		0.00064
1,3-Dichlorobenzene	ND		0.00064
1,4-Dichlorobenzene	ND		0.00064
1,2-Dichlorobenzene	ND		0.00064
1,2-Dibromo-3-chloropropane	ND		0.0032
1,2,4-Trichlorobenzene	ND		0.00064
Hexachlorobutadiene	ND		0.0032
1,2,3-Trichlorobenzene	ND		0.00064

Surrogate	Percent Recovery	Control Limits
Dibromofluoromethane	104	71-126
Toluene, d8	117	73-130
4-Bromofluorobenzene	94	70-130

This report pertains to the samples analyzed in accordance with the chain of custody,
and is intended only for the use of the individual or company to whom it is addressed.

Date of Report: October 4, 2006
Samples Submitted: September 18, 2006
Laboratory Reference: 0609-123
Project: 663-010-010

HALOGENATED VOLATILES by EPA 8260B
page 1 of 2

Date Extracted: 9-27-06
Date Analyzed: 9-27-06

Matrix: Soil
Units: mg/kg (ppm)

Lab ID: 09-123-06
Client ID: SVE-7S-5.0-5.5

Compound	Results	Flags	PQL
Dichlorodifluoromethane	ND		0.00069
Chloromethane	ND		0.0034
Vinyl Chloride	ND		0.0034
Bromomethane	ND		0.00069
Chloroethane	ND		0.0034
Trichlorofluoromethane	ND		0.00069
1,1-Dichloroethene	ND		0.00069
Iodomethane	ND		0.0034
Methylene Chloride	ND		0.0034
(trans) 1,2-Dichloroethene	ND		0.00069
1,1-Dichloroethane	ND		0.00069
2,2-Dichloropropane	ND		0.00069
(cis) 1,2-Dichloroethene	ND		0.00069
Bromochloromethane	ND		0.00069
Chloroform	ND		0.00069
1,1,1-Trichloroethane	ND		0.00069
Carbon Tetrachloride	ND		0.00069
1,1-Dichloropropene	ND		0.00069
1,2-Dichloroethane	ND		0.00069
Trichloroethene	ND		0.00069
1,2-Dichloropropane	ND		0.00069
Dibromomethane	ND		0.00069
Bromodichloromethane	ND		0.00069
2-Chloroethyl Vinyl Ether	ND		0.0034
(cis) 1,3-Dichloropropene	ND		0.00069
(trans) 1,3-Dichloropropene	ND		0.00069

This report pertains to the samples analyzed in accordance with the chain of custody,
and is intended only for the use of the individual or company to whom it is addressed.

Date of Report: October 4, 2006
Samples Submitted: September 18, 2006
Laboratory Reference: 0609-123
Project: 663-010-010

HALOGENATED VOLATILES by EPA 8260B
page 2 of 2

Lab ID: 09-123-06
Client ID: SVE-7S-5.0-5.5

Compound	Results	Flags	PQL
1,1,2-Trichloroethane	ND		0.00069
Tetrachloroethene	0.018		0.00069
1,3-Dichloropropane	ND		0.00069
Dibromochloromethane	ND		0.00069
1,2-Dibromoethane	ND		0.00069
Chlorobenzene	ND		0.00069
1,1,1,2-Tetrachloroethane	ND		0.00069
Bromoform	ND		0.00069
Bromobenzene	ND		0.00069
1,1,2,2-Tetrachloroethane	ND		0.00069
1,2,3-Trichloropropane	ND		0.00069
2-Chlorotoluene	ND		0.00069
4-Chlorotoluene	ND		0.00069
1,3-Dichlorobenzene	ND		0.00069
1,4-Dichlorobenzene	ND		0.00069
1,2-Dichlorobenzene	ND		0.00069
1,2-Dibromo-3-chloropropane	ND		0.0034
1,2,4-Trichlorobenzene	ND		0.00069
Hexachlorobutadiene	ND		0.0034
1,2,3-Trichlorobenzene	ND		0.00069

Surrogate	Percent Recovery	Control Limits
Dibromofluoromethane	99	71-126
Toluene, d8	105	73-130
4-Bromofluorobenzene	94	70-130

This report pertains to the samples analyzed in accordance with the chain of custody,
and is intended only for the use of the individual or company to whom it is addressed.

Date of Report: October 4, 2006
Samples Submitted: September 18, 2006
Laboratory Reference: 0609-123
Project: 663-010-010

HALOGENATED VOLATILES by EPA 8260B
page 1 of 2

Date Extracted: 9-27&28-06
Date Analyzed: 9-27&28-06

Matrix: Soil
Units: mg/kg (ppm)

Lab ID: 09-123-09
Client ID: SVE-7S-20.0-20.5

Compound	Results	Flags	PQL
Dichlorodifluoromethane	ND		0.00062
Chloromethane	ND		0.0031
Vinyl Chloride	ND		0.0031
Bromomethane	ND		0.00062
Chloroethane	ND		0.0031
Trichlorofluoromethane	ND		0.00062
1,1-Dichloroethene	ND		0.00062
Iodomethane	ND		0.0031
Methylene Chloride	ND		0.0031
(trans) 1,2-Dichloroethene	ND		0.00062
1,1-Dichloroethane	ND		0.00062
2,2-Dichloropropane	ND		0.00062
(cis) 1,2-Dichloroethene	ND		0.00062
Bromochloromethane	ND		0.00062
Chloroform	ND		0.00062
1,1,1-Trichloroethane	ND		0.00062
Carbon Tetrachloride	ND		0.00062
1,1-Dichloropropene	ND		0.00062
1,2-Dichloroethane	ND		0.00062
Trichloroethene	0.00083		0.00062
1,2-Dichloropropane	ND		0.00062
Dibromomethane	ND		0.00062
Bromodichloromethane	ND		0.00062
2-Chloroethyl Vinyl Ether	ND		0.0031
(cis) 1,3-Dichloropropene	ND		0.00062
(trans) 1,3-Dichloropropene	ND		0.00062

This report pertains to the samples analyzed in accordance with the chain of custody,
and is intended only for the use of the individual or company to whom it is addressed.

Date of Report: October 4, 2006
Samples Submitted: September 18, 2006
Laboratory Reference: 0609-123
Project: 663-010-010

HALOGENATED VOLATILES by EPA 8260B
page 2 of 2

Lab ID: 09-123-09
Client ID: SVE-7S-20.0-20.5

Compound	Results	Flags	PQL
1,1,2-Trichloroethane	ND		0.00062
Tetrachloroethene	1.8		0.15
1,3-Dichloropropane	ND		0.00062
Dibromochloromethane	ND		0.00062
1,2-Dibromoethane	ND		0.00062
Chlorobenzene	ND		0.00062
1,1,1,2-Tetrachloroethane	ND		0.00062
Bromoform	ND		0.00062
Bromobenzene	ND		0.00062
1,1,2,2-Tetrachloroethane	ND		0.00062
1,2,3-Trichloropropane	ND		0.00062
2-Chlorotoluene	ND		0.00062
4-Chlorotoluene	ND		0.00062
1,3-Dichlorobenzene	ND		0.00062
1,4-Dichlorobenzene	ND		0.00062
1,2-Dichlorobenzene	ND		0.00062
1,2-Dibromo-3-chloropropane	ND		0.0031
1,2,4-Trichlorobenzene	ND		0.00062
Hexachlorobutadiene	ND		0.0031
1,2,3-Trichlorobenzene	ND		0.00062

Surrogate	Percent Recovery	Control Limits
Dibromofluoromethane	102	71-126
Toluene, d8	109	73-130
4-Bromofluorobenzene	89	70-130

This report pertains to the samples analyzed in accordance with the chain of custody,
and is intended only for the use of the individual or company to whom it is addressed.

Date of Report: October 4, 2006
Samples Submitted: September 18, 2006
Laboratory Reference: 0609-123
Project: 663-010-010

HALOGENATED VOLATILES by EPA 8260B
METHOD BLANK QUALITY CONTROL
page 1 of 2

Date Extracted: 9-27-06
Date Analyzed: 9-27-06

Matrix: Soil
Units: mg/kg (ppm)

Lab ID: MB0927S1

Compound	Results	Flags	PQL
Dichlorodifluoromethane	ND		0.0010
Chloromethane	ND		0.0050
Vinyl Chloride	ND		0.0050
Bromomethane	ND		0.0010
Chloroethane	ND		0.0050
Trichlorofluoromethane	ND		0.0010
1,1-Dichloroethene	ND		0.0010
Iodomethane	ND		0.0050
Methylene Chloride	ND		0.0050
(trans) 1,2-Dichloroethene	ND		0.0010
1,1-Dichloroethane	ND		0.0010
2,2-Dichloropropane	ND		0.0010
(cis) 1,2-Dichloroethene	ND		0.0010
Bromochloromethane	ND		0.0010
Chloroform	ND		0.0010
1,1,1-Trichloroethane	ND		0.0010
Carbon Tetrachloride	ND		0.0010
1,1-Dichloropropene	ND		0.0010
1,2-Dichloroethane	ND		0.0010
Trichloroethene	ND		0.0010
1,2-Dichloropropane	ND		0.0010
Dibromomethane	ND		0.0010
Bromodichloromethane	ND		0.0010
2-Chloroethyl Vinyl Ether	ND		0.0050
(cis) 1,3-Dichloropropene	ND		0.0010
(trans) 1,3-Dichloropropene	ND		0.0010

This report pertains to the samples analyzed in accordance with the chain of custody,
and is intended only for the use of the individual or company to whom it is addressed.

Date of Report: October 4, 2006
Samples Submitted: September 18, 2006
Laboratory Reference: 0609-123
Project: 663-010-010

HALOGENATED VOLATILES by EPA 8260B
METHOD BLANK QUALITY CONTROL
page 2 of 2

Lab ID: MB0927S1

Compound	Results	Flags	PQL
1,1,2-Trichloroethane	ND		0.0010
Tetrachloroethene	ND		0.0010
1,3-Dichloropropane	ND		0.0010
Dibromochloromethane	ND		0.0010
1,2-Dibromoethane	ND		0.0010
Chlorobenzene	ND		0.0010
1,1,1,2-Tetrachloroethane	ND		0.0010
Bromoform	ND		0.0010
Bromobenzene	ND		0.0010
1,1,2,2-Tetrachloroethane	ND		0.0010
1,2,3-Trichloropropane	ND		0.0010
2-Chlorotoluene	ND		0.0010
4-Chlorotoluene	ND		0.0010
1,3-Dichlorobenzene	ND		0.0010
1,4-Dichlorobenzene	ND		0.0010
1,2-Dichlorobenzene	ND		0.0010
1,2-Dibromo-3-chloropropane	ND		0.0050
1,2,4-Trichlorobenzene	ND		0.0010
Hexachlorobutadiene	ND		0.0050
1,2,3-Trichlorobenzene	ND		0.0010

Surrogate	Percent Recovery	Control Limits
Dibromofluoromethane	101	71-126
Toluene, d8	111	73-130
4-Bromofluorobenzene	95	70-130

This report pertains to the samples analyzed in accordance with the chain of custody,
and is intended only for the use of the individual or company to whom it is addressed.

Date of Report: October 4, 2006
Samples Submitted: September 18, 2006
Laboratory Reference: 0609-123
Project: 663-010-010

HALOGENATED VOLATILES by EPA 8260B
METHOD BLANK QUALITY CONTROL
page 1 of 2

Date Extracted: 9-28-06
Date Analyzed: 9-28-06

Matrix: Soil
Units: mg/kg (ppm)

Lab ID: MB0928S1

Compound	Results	Flags	PQL
Dichlorodifluoromethane	0.0023		0.0010
Chloromethane	ND		0.0050
Vinyl Chloride	ND		0.0050
Bromomethane	ND		0.0010
Chloroethane	ND		0.0050
Trichlorofluoromethane	ND		0.0010
1,1-Dichloroethene	ND		0.0010
Iodomethane	ND		0.0050
Methylene Chloride	ND		0.0050
(trans) 1,2-Dichloroethene	ND		0.0010
1,1-Dichloroethane	ND		0.0010
2,2-Dichloropropane	ND		0.0010
(cis) 1,2-Dichloroethene	ND		0.0010
Bromochloromethane	ND		0.0010
Chloroform	ND		0.0010
1,1,1-Trichloroethane	ND		0.0010
Carbon Tetrachloride	ND		0.0010
1,1-Dichloropropene	ND		0.0010
1,2-Dichloroethane	ND		0.0010
Trichloroethene	ND		0.0010
1,2-Dichloropropane	ND		0.0010
Dibromomethane	ND		0.0010
Bromodichloromethane	ND		0.0010
2-Chloroethyl Vinyl Ether	ND		0.0050
(cis) 1,3-Dichloropropene	ND		0.0010
(trans) 1,3-Dichloropropene	ND		0.0010

This report pertains to the samples analyzed in accordance with the chain of custody,
and is intended only for the use of the individual or company to whom it is addressed.

Date of Report: October 4, 2006
Samples Submitted: September 18, 2006
Laboratory Reference: 0609-123
Project: 663-010-010

HALOGENATED VOLATILES by EPA 8260B
METHOD BLANK QUALITY CONTROL
page 2 of 2

Lab ID: MB0928S1

Compound	Results	Flags	PQL
1,1,2-Trichloroethane	ND		0.0010
Tetrachloroethene	ND		0.0010
1,3-Dichloropropane	ND		0.0010
Dibromochloromethane	ND		0.0010
1,2-Dibromoethane	ND		0.0010
Chlorobenzene	ND		0.0010
1,1,1,2-Tetrachloroethane	ND		0.0010
Bromoform	ND		0.0010
Bromobenzene	ND		0.0010
1,1,2,2-Tetrachloroethane	ND		0.0010
1,2,3-Trichloropropane	ND		0.0010
2-Chlorotoluene	ND		0.0010
4-Chlorotoluene	ND		0.0010
1,3-Dichlorobenzene	ND		0.0010
1,4-Dichlorobenzene	ND		0.0010
1,2-Dichlorobenzene	ND		0.0010
1,2-Dibromo-3-chloropropane	ND		0.0050
1,2,4-Trichlorobenzene	ND		0.0010
Hexachlorobutadiene	ND		0.0050
1,2,3-Trichlorobenzene	ND		0.0010

Surrogate	Percent Recovery	Control Limits
Dibromofluoromethane	75	71-126
Toluene, d8	84	73-130
4-Bromofluorobenzene	90	70-130

This report pertains to the samples analyzed in accordance with the chain of custody,
and is intended only for the use of the individual or company to whom it is addressed.

Date of Report: October 4, 2006
Samples Submitted: September 18, 2006
Laboratory Reference: 0609-123
Project: 663-010-010

HALOGENATED VOLATILES by EPA 8260B
SB/SBD QUALITY CONTROL

Date Extracted: 9-27-06
Date Analyzed: 9-27-06

Matrix: Soil
Units: mg/kg (ppm)

Lab ID: SB0927S1

Compound	Spike Amount	SB	Percent Recovery	SBD	Percent Recovery	Recovery Limits	Flags
1,1-Dichloroethene	0.0500	0.0454	91	0.0485	97	70-130	
Benzene	0.0500	0.0446	89	0.0449	90	70-130	
Trichloroethene	0.0500	0.0381	76	0.0395	79	70-130	
Toluene	0.0500	0.0442	88	0.0441	88	70-130	
Chlorobenzene	0.0500	0.0436	87	0.0449	90	70-130	

	RPD	RPD Limit	Flags
1,1-Dichloroethene	7	11	
Benzene	1	11	
Trichloroethene	3	13	
Toluene	0	11	
Chlorobenzene	3	12	

This report pertains to the samples analyzed in accordance with the chain of custody,
and is intended only for the use of the individual or company to whom it is addressed.

Date of Report: October 4, 2006
Samples Submitted: September 18, 2006
Laboratory Reference: 0609-123
Project: 663-010-010

HALOGENATED VOLATILES by EPA 8260B
MS/MSD QUALITY CONTROL

Date Extracted: 9-28-06
Date Analyzed: 9-28-06

Matrix: Soil
Units: mg/kg (ppm)

Lab ID: 09-154-05

Compound	Sample Amount	Spike Amount	MS	Percent Recovery	MSD	Percent Recovery	Recovery Limits	Flags
1,1-Dichloroethene	ND	0.0500	0.0658	132	0.0705	141	53-141	
Benzene	ND	0.0500	0.0551	110	0.0558	112	66-135	
Trichloroethene	ND	0.0500	0.0410	82	0.0396	79	69-130	
Toluene	ND	0.0500	0.0568	114	0.0517	103	72-127	
Chlorobenzene	ND	0.0500	0.0441	88	0.0458	92	68-134	

	RPD	RPD Limit	Flags
1,1-Dichloroethene	7	11	
Benzene	1	11	
Trichloroethene	3	13	
Toluene	9	11	
Chlorobenzene	4	12	

This report pertains to the samples analyzed in accordance with the chain of custody,
and is intended only for the use of the individual or company to whom it is addressed.

Date of Report: October 4, 2006
Samples Submitted: September 18, 2006
Laboratory Reference: 0609-123
Project: 663-010-010

% MOISTURE

Date Analyzed: 9-18-06

Client ID	Lab ID	% Moisture
IDW-SP-04	09-123-05	3
SVE-7S-5.0-5.5	09-123-06	8
SVE-7S-20.0-20.5	09-123-09	21

This report pertains to the samples analyzed in accordance with the chain of custody,
and is intended only for the use of the individual or company to whom it is addressed.

OnSite Environmental Inc.

Data Qualifiers and Abbreviations

A - Due to a high sample concentration, the amount spiked is insufficient for meaningful MS/MSD recovery data.

B - The analyte indicated was also found in the blank sample.

C - The duplicate RPD is outside control limits due to high result variability when analyte concentrations are within five times the quantitation limit.

E - The value reported exceeds the quantitation range and is an estimate.

F - Surrogate recovery data is not available due to the high concentration of coeluting target compounds.

G - Insufficient sample quantity for duplicate analysis.

H - The analyte indicated is a common laboratory solvent and may have been introduced during sample preparation, and be impacting the sample result.

I - Compound recovery is outside of the control limits.

J - The value reported was below the practical quantitation limit. The value is an estimate.

K - Sample duplicate RPD is outside control limits due to sample inhomogeneity. The sample was re-extracted and re-analyzed with similar results.

L - The RPD is outside of the control limits.

M - Hydrocarbons in the gasoline range (toluene-napthalene) are present in the sample.

O - Hydrocarbons indicative of diesel fuel are present in the sample and are impacting the gasoline result.

P - The RPD of the detected concentrations between the two columns is greater than 40.

Q - Surrogate recovery is outside of the control limits.

S - Surrogate recovery data is not available due to the necessary dilution of the sample.

T - The sample chromatogram is not similar to a typical _____.

U - The analyte was analyzed for, but was not detected above the reported sample quantitation limit.

V - Matrix Spike/Matrix Spike Duplicate recoveries are outside control limits due to matrix effects.

W - Matrix Spike/Matrix Spike Duplicate RPD are outside control limits due to matrix effects.

X - Sample extract treated with a silica gel cleanup procedure.

Y - Sample extract treated with an acid/silica gel cleanup procedure.

Z -

ND - Not Detected at PQL
PQL - Practical Quantitation Limit
RPD - Relative Percent Difference

This report pertains to the samples analyzed in accordance with the chain of custody, and is intended only for the use of the individual or company to whom it is addressed.

Chain of Custody

OnSite Environmental Inc.
14648 NE 95th Street • Redmond, WA 98052
Phone: (425) 883-3881 • Fax: (425) 885-4603

Company: Farallon Consulting
Project Number: 663-010-000 010
Project Name: Allison's Norge Village
Project Manager: Carla Brock
Sampled by: BDS

Turnaround Request (in working days)

(Check One)

- ☐ Same Day
- ☐ 1 Day
- ☐ 2 Day
- ☐ 3 Day
- ☒ Standard (7 working days) (TPH analysis 5 working days)
- ☐ _____ (other)

Laboratory Number: 09-123

Requested Analysis

Lab ID	Sample Identification	Date Sampled	Time Sampled	Matrix	# of Cont.	NWTPH-HCID	NWTPH-Gx/BTEX	NWTPH-Dx	Volatiles by 8260B	Halogenated Volatiles by 8260B	Semivolatiles by 8270C	PAHs by 8270C / SIM	PCBs by 8082	Pesticides by 8081A	Herbicides by 8151A	Total RCRA Metals (8)	TCLP Metals	HEM by 1664	VPH	EPH	% Moisture
1	SVE-4S -4.5-5.5	9/14/06	14:55	S	4				X NO												X
2	SVE-4S 10.0-10.5	↓	15:10	↓	↓				NO												↓
3	SVE-4S 15.0-15.5		15:15						NO												
4	SVE-4S 20.0-20.5		15:30						NO												
5	IDW-SP-04	9/15/06	13:28	S	4				~~X~~ NO	⊗											⊗
6	SVE-7S- 5.0-5.5		14:37						X NO	⊗											⊗
7	SVE-7S- 9.5-10.0		14:46																		
8	SVE-7S- 14.5-15.0		14:54																		
9	SVE-7S- 20.0-20.5	↓	15:02	↓	↓					⊗											⊗

BDS

	Signature	Company	Date	Time
Relinquished by	(Brian D. Goulson)	Farallon Consulting	9/15/06	16:05
Received by			9/18/06	1000
Relinquished by				
Received by				
Relinquished by				
Received by				
Reviewed by/Date		Reviewed by/Date		

Comments/Special Instructions:
electronic copy & EQuIS EDD to Carla Brock
cbrock@farallonconsulting.com
⊗ Added 9/22/06. DB

Chromatograms with final report ☐

DISTRIBUTION LEGEND: White - OnSite Copy Yellow - Report Copy Pink - Client Copy

OnSite Environmental Inc.
14648 NE 95th Street, Redmond, WA 98052 • (425) 883-3881

August 30, 2006

Carla Brock
Farallon Consulting, LLC
320 3rd Avenue NE, Suite 200
Issaquah, WA 98027

Re: Analytical Data for Project 663-010
Laboratory Reference No. 0608-213

Dear Carla:

Enclosed are the analytical results and associated quality control data for samples submitted on August 23, 2006.

The standard policy of OnSite Environmental Inc. is to store your samples for 30 days from the date of receipt. If you require longer storage, please contact the laboratory.

We appreciate the opportunity to be of service to you on this project. If you have any questions concerning the data, or need additional information, please feel free to call me.

Sincerely,

David Baumeister
Project Manager

Enclosures

This report pertains to the samples analyzed in accordance with the chain of custody, and is intended only for the use of the individual or company to whom it is addressed.

Date of Report: August 30, 2006
Samples Submitted: August 23, 2006
Laboratory Reference: 0608-213
Project: 663-010

Case Narrative

Samples were collected on August 22, 2006 and received by the laboratory on August 23, 2006. They were maintained at the laboratory at a temperature of 2°C to 6°C except as noted below.

General QA/QC issues associated with the analytical data enclosed in this laboratory report will be indicated with a reference to a comment or explanation on the Data Qualifier page. More complex and involved QA/QC issues will be discussed in detail below.

Halogenated Volatiles EPA 8260B Analysis

Per EPA Method 5035A, samples were received by the laboratory in pre-weighed 40 mL VOA vials within 48 hours of sample collection. They were stored in a freezer at between -7°C and -20°C until extraction or analysis.

Any other QA/QC issues associated with this extraction and analysis will be indicated with a footnote reference and discussed in detail on the Data Qualifier page.

This report pertains to the samples analyzed in accordance with the chain of custody,
and is intended only for the use of the individual or company to whom it is addressed.

Date of Report: August 30, 2006
Samples Submitted: August 23, 2006
Laboratory Reference: 0608-213
Project: 663-010

HALOGENATED VOLATILES by EPA 8260B

Date Extracted: 8-25-06
Date Analyzed: 8-25-06

Matrix: Soil
Units: mg/kg (ppm)

Lab ID: 08-213-02
Client ID: MW11-110-111

Compound	Results	Flags	PQL
Dichlorodifluoromethane	ND		0.00068
Chloromethane	ND		0.0034
Vinyl Chloride	ND		0.00068
Bromomethane	ND		0.00068
Chloroethane	ND		0.0034
Trichlorofluoromethane	ND		0.00068
1,1-Dichloroethene	ND		0.00068
Iodomethane	ND		0.0034
Methylene Chloride	ND		0.0034
(trans) 1,2-Dichloroethene	ND		0.00068
1,1-Dichloroethane	ND		0.00068
2,2-Dichloropropane	ND		0.00068
(cis) 1,2-Dichloroethene	ND		0.00068
Bromochloromethane	ND		0.00068
Chloroform	ND		0.00068
1,1,1-Trichloroethane	ND		0.00068
Carbon Tetrachloride	ND		0.00068
1,1-Dichloropropene	ND		0.00068
1,2-Dichloroethane	ND		0.00068
Trichloroethene	ND		0.00068
1,2-Dichloropropane	ND		0.00068
Dibromomethane	ND		0.00068
Bromodichloromethane	ND		0.00068
2-Chloroethyl Vinyl Ether	ND		0.0034
(cis) 1,3-Dichloropropene	ND		0.00068
(trans) 1,3-Dichloropropene	ND		0.00068

This report pertains to the samples analyzed in accordance with the chain of custody,
and is intended only for the use of the individual or company to whom it is addressed.

Date of Report: August 30, 2006
Samples Submitted: August 23, 2006
Laboratory Reference: 0608-213
Project: 663-010

HALOGENATED VOLATILES by EPA 8260B
page 2 of 2

Lab ID: 08-213-02
Client ID: MW11-110-111

Compound	Results	Flags	PQL
1,1,2-Trichloroethane	ND		0.00068
Tetrachloroethene	ND		0.00068
1,3-Dichloropropane	ND		0.00068
Dibromochloromethane	ND		0.00068
1,2-Dibromoethane	ND		0.00068
Chlorobenzene	ND		0.00068
1,1,1,2-Tetrachloroethane	ND		0.00068
Bromoform	ND		0.00068
Bromobenzene	ND		0.00068
1,1,2,2-Tetrachloroethane	ND		0.00068
1,2,3-Trichloropropane	ND		0.00068
2-Chlorotoluene	ND		0.00068
4-Chlorotoluene	ND		0.00068
1,3-Dichlorobenzene	ND		0.00068
1,4-Dichlorobenzene	ND		0.00068
1,2-Dichlorobenzene	ND		0.00068
1,2-Dibromo-3-chloropropane	ND		0.0034
1,2,4-Trichlorobenzene	ND		0.00068
Hexachlorobutadiene	ND		0.0034
1,2,3-Trichlorobenzene	ND		0.00068

Surrogate	Percent Recovery	Control Limits
Dibromofluoromethane	82	71-126
Toluene, d8	87	73-130
4-Bromofluorobenzene	86	70-130

This report pertains to the samples analyzed in accordance with the chain of custody,
and is intended only for the use of the individual or company to whom it is addressed.

Date of Report: August 30, 2006
Samples Submitted: August 23, 2006
Laboratory Reference: 0608-213
Project: 663-010

HALOGENATED VOLATILES by EPA 8260B

Date Extracted: 8-25-06
Date Analyzed: 8-25-06

Matrix: Soil
Units: mg/kg (ppm)

Lab ID: 08-213-03
Client ID: MW11-113-114

Compound	Results	Flags	PQL
Dichlorodifluoromethane	ND		0.00062
Chloromethane	ND		0.0031
Vinyl Chloride	ND		0.00062
Bromomethane	ND		0.00062
Chloroethane	ND		0.0031
Trichlorofluoromethane	ND		0.00062
1,1-Dichloroethene	ND		0.00062
Iodomethane	ND		0.0031
Methylene Chloride	ND		0.0031
(trans) 1,2-Dichloroethene	ND		0.00062
1,1-Dichloroethane	ND		0.00062
2,2-Dichloropropane	ND		0.00062
(cis) 1,2-Dichloroethene	ND		0.00062
Bromochloromethane	ND		0.00062
Chloroform	ND		0.00062
1,1,1-Trichloroethane	ND		0.00062
Carbon Tetrachloride	ND		0.00062
1,1-Dichloropropene	ND		0.00062
1,2-Dichloroethane	ND		0.00062
Trichloroethene	ND		0.00062
1,2-Dichloropropane	ND		0.00062
Dibromomethane	ND		0.00062
Bromodichloromethane	ND		0.00062
2-Chloroethyl Vinyl Ether	ND		0.0031
(cis) 1,3-Dichloropropene	ND		0.00062
(trans) 1,3-Dichloropropene	ND		0.00062

This report pertains to the samples analyzed in accordance with the chain of custody,
and is intended only for the use of the individual or company to whom it is addressed.

Date of Report: August 30, 2006
Samples Submitted: August 23, 2006
Laboratory Reference: 0608-213
Project: 663-010

HALOGENATED VOLATILES by EPA 8260B
page 2 of 2

Lab ID: 08-213-03
Client ID: MW11-113-114

Compound	Results	Flags	PQL
1,1,2-Trichloroethane	ND		0.00062
Tetrachloroethene	ND		0.00062
1,3-Dichloropropane	ND		0.00062
Dibromochloromethane	ND		0.00062
1,2-Dibromoethane	ND		0.00062
Chlorobenzene	ND		0.00062
1,1,1,2-Tetrachloroethane	ND		0.00062
Bromoform	ND		0.00062
Bromobenzene	ND		0.00062
1,1,2,2-Tetrachloroethane	ND		0.00062
1,2,3-Trichloropropane	ND		0.00062
2-Chlorotoluene	ND		0.00062
4-Chlorotoluene	ND		0.00062
1,3-Dichlorobenzene	ND		0.00062
1,4-Dichlorobenzene	ND		0.00062
1,2-Dichlorobenzene	ND		0.00062
1,2-Dibromo-3-chloropropane	ND		0.0031
1,2,4-Trichlorobenzene	ND		0.00062
Hexachlorobutadiene	ND		0.0031
1,2,3-Trichlorobenzene	ND		0.00062

Surrogate	Percent Recovery	Control Limits
Dibromofluoromethane	79	71-126
Toluene, d8	86	73-130
4-Bromofluorobenzene	86	70-130

This report pertains to the samples analyzed in accordance with the chain of custody,
and is intended only for the use of the individual or company to whom it is addressed.

Date of Report: August 30, 2006
Samples Submitted: August 23, 2006
Laboratory Reference: 0608-213
Project: 663-010

HALOGENATED VOLATILES by EPA 8260B
METHOD BLANK QUALITY CONTROL
page 1 of 2

Date Extracted: 8-25-06
Date Analyzed: 8-25-06

Matrix: Soil
Units: mg/kg (ppm)

Lab ID: MB0825S1

Compound	Results	Flags	PQL
Dichlorodifluoromethane	ND		0.0010
Chloromethane	ND		0.0050
Vinyl Chloride	ND		0.0010
Bromomethane	ND		0.0010
Chloroethane	ND		0.0050
Trichlorofluoromethane	ND		0.0010
1,1-Dichloroethene	ND		0.0010
Iodomethane	ND		0.0050
Methylene Chloride	ND		0.0050
(trans) 1,2-Dichloroethene	ND		0.0010
1,1-Dichloroethane	ND		0.0010
2,2-Dichloropropane	ND		0.0010
(cis) 1,2-Dichloroethene	ND		0.0010
Bromochloromethane	ND		0.0010
Chloroform	ND		0.0010
1,1,1-Trichloroethane	ND		0.0010
Carbon Tetrachloride	ND		0.0010
1,1-Dichloropropene	ND		0.0010
1,2-Dichloroethane	ND		0.0010
Trichloroethene	ND		0.0010
1,2-Dichloropropane	ND		0.0010
Dibromomethane	ND		0.0010
Bromodichloromethane	ND		0.0010
2-Chloroethyl Vinyl Ether	ND		0.0050
(cis) 1,3-Dichloropropene	ND		0.0010
(trans) 1,3-Dichloropropene	ND		0.0010

This report pertains to the samples analyzed in accordance with the chain of custody,
and is intended only for the use of the individual or company to whom it is addressed.

Date of Report: August 30, 2006
Samples Submitted: August 23, 2006
Laboratory Reference: 0608-213
Project: 663-010

HALOGENATED VOLATILES by EPA 8260B
METHOD BLANK QUALITY CONTROL
page 2 of 2

Lab ID: MB0825S1

Compound	Results	Flags	PQL
1,1,2-Trichloroethane	ND		0.0010
Tetrachloroethene	ND		0.0010
1,3-Dichloropropane	ND		0.0010
Dibromochloromethane	ND		0.0010
1,2-Dibromoethane	ND		0.0010
Chlorobenzene	ND		0.0010
1,1,1,2-Tetrachloroethane	ND		0.0010
Bromoform	ND		0.0010
Bromobenzene	ND		0.0010
1,1,2,2-Tetrachloroethane	ND		0.0010
1,2,3-Trichloropropane	ND		0.0010
2-Chlorotoluene	ND		0.0010
4-Chlorotoluene	ND		0.0010
1,3-Dichlorobenzene	ND		0.0010
1,4-Dichlorobenzene	ND		0.0010
1,2-Dichlorobenzene	ND		0.0010
1,2-Dibromo-3-chloropropane	ND		0.0050
1,2,4-Trichlorobenzene	ND		0.0010
Hexachlorobutadiene	ND		0.0050
1,2,3-Trichlorobenzene	ND		0.0010

Surrogate	Percent Recovery	Control Limits
Dibromofluoromethane	73	71-126
Toluene, d8	91	73-130
4-Bromofluorobenzene	96	70-130

This report pertains to the samples analyzed in accordance with the chain of custody,
and is intended only for the use of the individual or company to whom it is addressed.

Date of Report: August 30, 2006
Samples Submitted: August 23, 2006
Laboratory Reference: 0608-213
Project: 663-010

HALOGENATED VOLATILES by EPA 8260B
SB/SBD QUALITY CONTROL

Date Extracted: 8-25-06
Date Analyzed: 8-25-06

Matrix: Soil
Units: mg/kg (ppm)

Lab ID: SB0825S1

Compound	Spike Amount	SB	Percent Recovery	SBD	Percent Recovery	Recovery Limits	Flags
1,1-Dichloroethene	0.0500	0.0432	86	0.0425	85	70-130	
Benzene	0.0500	0.0397	79	0.0398	80	70-130	
Trichloroethene	0.0500	0.0471	94	0.0477	95	70-130	
Toluene	0.0500	0.0466	93	0.0481	96	70-130	
Chlorobenzene	0.0500	0.0528	106	0.0533	107	70-130	

	RPD	RPD Limit	Flags
1,1-Dichloroethene	1	11	
Benzene	0	11	
Trichloroethene	1	13	
Toluene	3	11	
Chlorobenzene	1	12	

This report pertains to the samples analyzed in accordance with the chain of custody,
and is intended only for the use of the individual or company to whom it is addressed.

Date of Report: August 30, 2006
Samples Submitted: August 23, 2006
Laboratory Reference: 0608-213
Project: 663-010

% MOISTURE

Date Analyzed: 8-25-06

Client ID	Lab ID	% Moisture
MW11-110-111	08-213-02	14
MW11-113-114	08-213-03	14

This report pertains to the samples analyzed in accordance with the chain of custody,
and is intended only for the use of the individual or company to whom it is addressed.

OnSite Environmental Inc.

Data Qualifiers and Abbreviations

A - Due to a high sample concentration, the amount spiked is insufficient for meaningful MS/MSD recovery data.

B - The analyte indicated was also found in the blank sample.

C - The duplicate RPD is outside control limits due to high result variability when analyte concentrations are within five times the quantitation limit.

E - The value reported exceeds the quantitation range and is an estimate.

F - Surrogate recovery data is not available due to the high concentration of coeluting target compounds.

G - Insufficient sample quantity for duplicate analysis.

H - The analyte indicated is a common laboratory solvent and may have been introduced during sample preparation, and be impacting the sample result.

I - Compound recovery is outside of the control limits.

J - The value reported was below the practical quantitation limit. The value is an estimate.

K - Sample duplicate RPD is outside control limits due to sample inhomogeneity. The sample was re-extracted and re-analyzed with similar results.

L - The RPD is outside of the control limits.

M - Hydrocarbons in the gasoline range (toluene-napthalene) are present in the sample.

O - Hydrocarbons indicative of diesel fuel are present in the sample and are impacting the gasoline result.

P - The RPD of the detected concentrations between the two columns is greater than 40.

Q - Surrogate recovery is outside of the control limits.

S - Surrogate recovery data is not available due to the necessary dilution of the sample.

T - The sample chromatogram is not similar to a typical _____.

U - The analyte was analyzed for, but was not detected above the reported sample quantitation limit.

V - Matrix Spike/Matrix Spike Duplicate recoveries are outside control limits due to matrix effects.

W - Matrix Spike/Matrix Spike Duplicate RPD are outside control limits due to matrix effects.

X - Sample extract treated with a silica gel cleanup procedure.

Y - Sample extract treated with an acid/silica gel cleanup procedure.

Z -

ND - Not Detected at PQL
PQL - Practical Quantitation Limit
RPD - Relative Percent Difference

This report pertains to the samples analyzed in accordance with the chain of custody, and is intended only for the use of the individual or company to whom it is addressed.

Chain of Custody

OnSite Environmental Inc.
14648 NE 95th Street • Redmond, WA 98052
Phone: (425) 883-3881 • Fax: (425) 885-4603

Company: Farallon
Project Number: 663-010
Project Name: Allyson's Norge Village
Project Manager: Carla Brock
Sampled by: J Schmitt

Turnaround Request (in working days)

(Check One)

- ☐ Same Day
- ☐ 1 Day
- ☐ 2 Day
- ☐ 3 Day
- ☒ Standard (7 working days) (TPH analysis 5 working days)
- ☐ _____ (other)

Laboratory Number: 08-213

Requested Analysis

Lab ID	Sample Identification	Date Sampled	Time Sampled	Matrix	# of Cont.	NWTPH-HCID	NWTPH-Gx/BTEX	NWTPH-Dx	Volatiles by 8260B	Halogenated Volatiles by 8260B	Semivolatiles by 8270C	PAHs by 8270C / SIM	PCBs by 8082	Pesticides by 8081A	Herbicides by 8151A	Total RCRA Metals (8)	TCLP Metals	HEM by 1664	VPH	EPH	% Moisture
1	MW11-104-105	8/23/06	0845	S	4																
2	MW11-110-111		0940							⊗											⊗
3	MW11-113-114		1015						⊗												⊗
4	MW11-118-120		1155																		
5	MW11-123-124		1200																		
6	MW11-BGW-115		1125	W	3																

	Signature	Company	Date	Time
Relinquished by		Farallon	8/23/06	1320
Received by		Speedy	8/23	1320
Relinquished by				
Received by			8/23/06	1640
Relinquished by				
Received by				
Reviewed by/Date		Reviewed by/Date		

Comments/Special Instructions:
⊗ Added 8/24/06. DB

Chromatograms with final report ☐

DISTRIBUTION LEGEND: White - OnSite Copy Yellow - Report Copy Pink - Client Copy

OnSite Environmental Inc.
14648 NE 95th Street, Redmond, WA 98052 • (425) 883-3881

September 7, 2006

Carla Brock
Farallon Consulting, LLC
320 3rd Avenue NE, Suite 200
Issaquah, WA 98027

Re: Analytical Data for Project 663-010
Laboratory Reference No. 0608-240

Dear Carla:

Enclosed are the analytical results and associated quality control data for samples submitted on August 28, 2006.

The standard policy of OnSite Environmental Inc. is to store your samples for 30 days from the date of receipt. If you require longer storage, please contact the laboratory.

We appreciate the opportunity to be of service to you on this project. If you have any questions concerning the data, or need additional information, please feel free to call me.

Sincerely,

David Baumeister
Project Manager

Enclosures

This report pertains to the samples analyzed in accordance with the chain of custody, and is intended only for the use of the individual or company to whom it is addressed.

Date of Report: September 7, 2006
Samples Submitted: August 28, 2006
Laboratory Reference: 0608-240
Project: 663-010

Case Narrative

Samples were collected on August 24 and 25, 2006 and received by the laboratory on August 28, 2006. They were maintained at the laboratory at a temperature of 2°C to 6°C except as noted below.

General QA/QC issues associated with the analytical data enclosed in this laboratory report will be indicated with a reference to a comment or explanation on the Data Qualifier page. More complex and involved QA/QC issues will be discussed in detail below.

Halogenated Volatiles EPA 8260B Analysis

Per EPA Method 5035A, samples were received by the laboratory in pre-weighed 40 mL VOA vials within 48 hours of sample collection. They were stored in a freezer at between -7°C and -20°C until extraction or analysis.

Any other QA/QC issues associated with this extraction and analysis will be indicated with a footnote reference and discussed in detail on the Data Qualifier page.

This report pertains to the samples analyzed in accordance with the chain of custody, and is intended only for the use of the individual or company to whom it is addressed.

Date of Report: September 7, 2006
Samples Submitted: August 28, 2006
Laboratory Reference: 0608-240
Project: 663-010

HALOGENATED VOLATILES by EPA 8260B

Date Extracted: 8-31-06
Date Analyzed: 8-31-06

Matrix: Soil
Units: mg/kg (ppm)

Lab ID: 08-240-01
Client ID: MW10-11-12

Compound	Results	Flags	PQL
Dichlorodifluoromethane	ND		0.00060
Chloromethane	ND		0.00060
Vinyl Chloride	ND		0.00060
Bromomethane	ND		0.00060
Chloroethane	ND		0.0030
Trichlorofluoromethane	ND		0.00060
1,1-Dichloroethene	ND		0.00060
Iodomethane	ND		0.0030
Methylene Chloride	0.0054	H	0.0030
(trans) 1,2-Dichloroethene	ND		0.00060
1,1-Dichloroethane	ND		0.00060
2,2-Dichloropropane	ND		0.00060
(cis) 1,2-Dichloroethene	ND		0.00060
Bromochloromethane	ND		0.00060
Chloroform	ND		0.00060
1,1,1-Trichloroethane	ND		0.00060
Carbon Tetrachloride	ND		0.00060
1,1-Dichloropropene	ND		0.00060
1,2-Dichloroethane	ND		0.00060
Trichloroethene	ND		0.00060
1,2-Dichloropropane	ND		0.00060
Dibromomethane	ND		0.00060
Bromodichloromethane	ND		0.00060
2-Chloroethyl Vinyl Ether	ND		0.0030
(cis) 1,3-Dichloropropene	ND		0.00060
(trans) 1,3-Dichloropropene	ND		0.00060

This report pertains to the samples analyzed in accordance with the chain of custody,
and is intended only for the use of the individual or company to whom it is addressed.

Date of Report: September 7, 2006
Samples Submitted: August 28, 2006
Laboratory Reference: 0608-240
Project: 663-010

HALOGENATED VOLATILES by EPA 8260B
page 2 of 2

Lab ID: 08-240-01
Client ID: MW10-11-12

Compound	Results	Flags	PQL
1,1,2-Trichloroethane	ND		0.00060
Tetrachloroethene	0.0012		0.00060
1,3-Dichloropropane	ND		0.00060
Dibromochloromethane	ND		0.00060
1,2-Dibromoethane	ND		0.00060
Chlorobenzene	ND		0.00060
1,1,1,2-Tetrachloroethane	ND		0.00060
Bromoform	ND		0.00060
Bromobenzene	ND		0.00060
1,1,2,2-Tetrachloroethane	ND		0.00060
1,2,3-Trichloropropane	ND		0.00060
2-Chlorotoluene	ND		0.00060
4-Chlorotoluene	ND		0.00060
1,3-Dichlorobenzene	ND		0.00060
1,4-Dichlorobenzene	ND		0.00060
1,2-Dichlorobenzene	ND		0.00060
1,2-Dibromo-3-chloropropane	ND		0.0030
1,2,4-Trichlorobenzene	ND		0.00060
Hexachlorobutadiene	ND		0.0030
1,2,3-Trichlorobenzene	ND		0.00060

Surrogate	Percent Recovery	Control Limits
Dibromofluoromethane	101	71-126
Toluene, d8	88	73-130
4-Bromofluorobenzene	106	70-130

This report pertains to the samples analyzed in accordance with the chain of custody,
and is intended only for the use of the individual or company to whom it is addressed.

Date of Report: September 7, 2006
Samples Submitted: August 28, 2006
Laboratory Reference: 0608-240
Project: 663-010

HALOGENATED VOLATILES by EPA 8260B
page 1 of 2

Date Extracted: 8-31-06
Date Analyzed: 8-31-06

Matrix: Soil
Units: mg/kg (ppm)

Lab ID: 08-240-15
Client ID: MW10-116-117

Compound	Results	Flags	PQL
Dichlorodifluoromethane	ND		0.00055
Chloromethane	ND		0.00055
Vinyl Chloride	ND		0.00055
Bromomethane	ND		0.00055
Chloroethane	ND		0.0027
Trichlorofluoromethane	ND		0.00055
1,1-Dichloroethene	ND		0.00055
Iodomethane	ND		0.0027
Methylene Chloride	ND		0.0027
(trans) 1,2-Dichloroethene	ND		0.00055
1,1-Dichloroethane	ND		0.00055
2,2-Dichloropropane	ND		0.00055
(cis) 1,2-Dichloroethene	ND		0.00055
Bromochloromethane	ND		0.00055
Chloroform	ND		0.00055
1,1,1-Trichloroethane	ND		0.00055
Carbon Tetrachloride	ND		0.00055
1,1-Dichloropropene	ND		0.00055
1,2-Dichloroethane	ND		0.00055
Trichloroethene	ND		0.00055
1,2-Dichloropropane	ND		0.00055
Dibromomethane	ND		0.00055
Bromodichloromethane	ND		0.00055
2-Chloroethyl Vinyl Ether	ND		0.0027
(cis) 1,3-Dichloropropene	ND		0.00055
(trans) 1,3-Dichloropropene	ND		0.00055

This report pertains to the samples analyzed in accordance with the chain of custody,
and is intended only for the use of the individual or company to whom it is addressed.

Date of Report: September 7, 2006
Samples Submitted: August 28, 2006
Laboratory Reference: 0608-240
Project: 663-010

HALOGENATED VOLATILES by EPA 8260B
page 2 of 2

Lab ID: 08-240-15
Client ID: MW10-116-117

Compound	Results	Flags	PQL
1,1,2-Trichloroethane	ND		0.00055
Tetrachloroethene	ND		0.00055
1,3-Dichloropropane	ND		0.00055
Dibromochloromethane	ND		0.00055
1,2-Dibromoethane	ND		0.00055
Chlorobenzene	ND		0.00055
1,1,1,2-Tetrachloroethane	ND		0.00055
Bromoform	ND		0.00055
Bromobenzene	ND		0.00055
1,1,2,2-Tetrachloroethane	ND		0.00055
1,2,3-Trichloropropane	ND		0.00055
2-Chlorotoluene	ND		0.00055
4-Chlorotoluene	ND		0.00055
1,3-Dichlorobenzene	ND		0.00055
1,4-Dichlorobenzene	ND		0.00055
1,2-Dichlorobenzene	ND		0.00055
1,2-Dibromo-3-chloropropane	ND		0.0027
1,2,4-Trichlorobenzene	ND		0.00055
Hexachlorobutadiene	ND		0.0027
1,2,3-Trichlorobenzene	ND		0.00055

Surrogate	Percent Recovery	Control Limits
Dibromofluoromethane	82	71-126
Toluene, d8	80	73-130
4-Bromofluorobenzene	99	70-130

This report pertains to the samples analyzed in accordance with the chain of custody,
and is intended only for the use of the individual or company to whom it is addressed.

Date of Report: September 7, 2006
Samples Submitted: August 28, 2006
Laboratory Reference: 0608-240
Project: 663-010

HALOGENATED VOLATILES by EPA 8260B
METHOD BLANK QUALITY CONTROL
page 1 of 2

Date Extracted: 8-31-06
Date Analyzed: 8-31-06

Matrix: Soil
Units: mg/kg (ppm)

Lab ID: MB0831S1

Compound	Results	Flags	PQL
Dichlorodifluoromethane	ND		0.0010
Chloromethane	ND		0.0010
Vinyl Chloride	ND		0.0010
Bromomethane	ND		0.0010
Chloroethane	ND		0.0050
Trichlorofluoromethane	ND		0.0010
1,1-Dichloroethene	ND		0.0010
Iodomethane	ND		0.0050
Methylene Chloride	ND		0.0050
(trans) 1,2-Dichloroethene	ND		0.0010
1,1-Dichloroethane	ND		0.0010
2,2-Dichloropropane	ND		0.0010
(cis) 1,2-Dichloroethene	ND		0.0010
Bromochloromethane	ND		0.0010
Chloroform	ND		0.0010
1,1,1-Trichloroethane	ND		0.0010
Carbon Tetrachloride	ND		0.0010
1,1-Dichloropropene	ND		0.0010
1,2-Dichloroethane	ND		0.0010
Trichloroethene	ND		0.0010
1,2-Dichloropropane	ND		0.0010
Dibromomethane	ND		0.0010
Bromodichloromethane	ND		0.0010
2-Chloroethyl Vinyl Ether	ND		0.0050
(cis) 1,3-Dichloropropene	ND		0.0010
(trans) 1,3-Dichloropropene	ND		0.0010

This report pertains to the samples analyzed in accordance with the chain of custody,
and is intended only for the use of the individual or company to whom it is addressed.

Date of Report: September 7, 2006
Samples Submitted: August 28, 2006
Laboratory Reference: 0608-240
Project: 663-010

HALOGENATED VOLATILES by EPA 8260B
METHOD BLANK QUALITY CONTROL
page 2 of 2

Lab ID: MB0831S1

Compound	Results	Flags	PQL
1,1,2-Trichloroethane	ND		0.0010
Tetrachloroethene	ND		0.0010
1,3-Dichloropropane	ND		0.0010
Dibromochloromethane	ND		0.0010
1,2-Dibromoethane	ND		0.0010
Chlorobenzene	ND		0.0010
1,1,1,2-Tetrachloroethane	ND		0.0010
Bromoform	ND		0.0010
Bromobenzene	ND		0.0010
1,1,2,2-Tetrachloroethane	ND		0.0010
1,2,3-Trichloropropane	ND		0.0010
2-Chlorotoluene	ND		0.0010
4-Chlorotoluene	ND		0.0010
1,3-Dichlorobenzene	ND		0.0010
1,4-Dichlorobenzene	ND		0.0010
1,2-Dichlorobenzene	ND		0.0010
1,2-Dibromo-3-chloropropane	ND		0.0050
1,2,4-Trichlorobenzene	ND		0.0010
Hexachlorobutadiene	ND		0.0050
1,2,3-Trichlorobenzene	ND		0.0010

Surrogate	Percent Recovery	Control Limits
Dibromofluoromethane	93	71-126
Toluene, d8	91	73-130
4-Bromofluorobenzene	114	70-130

This report pertains to the samples analyzed in accordance with the chain of custody,
and is intended only for the use of the individual or company to whom it is addressed.

Date of Report: September 7, 2006
Samples Submitted: August 28, 2006
Laboratory Reference: 0608-240
Project: 663-010

HALOGENATED VOLATILES by EPA 8260B
SB/SBD QUALITY CONTROL

Date Extracted: 8-31-06
Date Analyzed: 8-31-06

Matrix: Soil
Units: mg/kg (ppm)

Lab ID: SB0831S1

Compound	Spike Amount	SB	Percent Recovery	SBD	Percent Recovery	Recovery Limits	Flags
1,1-Dichloroethene	0.0500	0.0541	108	0.0544	109	70-130	
Benzene	0.0500	0.0421	84	0.0465	93	70-130	
Trichloroethene	0.0500	0.0461	92	0.0493	99	70-130	
Toluene	0.0500	0.0441	88	0.0486	97	70-130	
Chlorobenzene	0.0500	0.0503	101	0.0528	106	70-130	

	RPD	RPD Limit	Flags
1,1-Dichloroethene	1	11	
Benzene	10	11	
Trichloroethene	7	13	
Toluene	10	11	
Chlorobenzene	5	12	

This report pertains to the samples analyzed in accordance with the chain of custody,
and is intended only for the use of the individual or company to whom it is addressed.

Date of Report: September 7, 2006
Samples Submitted: August 28, 2006
Laboratory Reference: 0608-240
Project: 663-010

% MOISTURE

Date Analyzed: 8-31-06

Client ID	Lab ID	% Moisture
MW10-11-12	08-240-01	14
MW10-116-117	08-240-15	17

This report pertains to the samples analyzed in accordance with the chain of custody,
and is intended only for the use of the individual or company to whom it is addressed.

OnSite Environmental Inc.

Data Qualifiers and Abbreviations

A - Due to a high sample concentration, the amount spiked is insufficient for meaningful MS/MSD recovery data.

B - The analyte indicated was also found in the blank sample.

C - The duplicate RPD is outside control limits due to high result variability when analyte concentrations are within five times the quantitation limit.

E - The value reported exceeds the quantitation range and is an estimate.

F - Surrogate recovery data is not available due to the high concentration of coeluting target compounds.

G - Insufficient sample quantity for duplicate analysis.

H - The analyte indicated is a common laboratory solvent and may have been introduced during sample preparation, and be impacting the sample result.

I - Compound recovery is outside of the control limits.

J - The value reported was below the practical quantitation limit. The value is an estimate.

K - Sample duplicate RPD is outside control limits due to sample inhomogeneity. The sample was re-extracted and re-analyzed with similar results.

L - The RPD is outside of the control limits.

M - Hydrocarbons in the gasoline range (toluene-napthalene) are present in the sample.

O - Hydrocarbons indicative of diesel fuel are present in the sample and are impacting the gasoline result.

P - The RPD of the detected concentrations between the two columns is greater than 40.

Q - Surrogate recovery is outside of the control limits.

S - Surrogate recovery data is not available due to the necessary dilution of the sample.

T - The sample chromatogram is not similar to a typical _____.

U - The analyte was analyzed for, but was not detected above the reported sample quantitation limit.

V - Matrix Spike/Matrix Spike Duplicate recoveries are outside control limits due to matrix effects.

W - Matrix Spike/Matrix Spike Duplicate RPD are outside control limits due to matrix effects.

X - Sample extract treated with a silica gel cleanup procedure.

Y - Sample extract treated with an acid/silica gel cleanup procedure.

Z -

ND - Not Detected at PQL
PQL - Practical Quantitation Limit
RPD - Relative Percent Difference

This report pertains to the samples analyzed in accordance with the chain of custody, and is intended only for the use of the individual or company to whom it is addressed.

Chain of Custody

OnSite Environmental Inc.
14648 NE 95th Street • Redmond, WA 98052
Phone: (425) 883-3881 • Fax: (425) 885-4603

Company: Farallon Consulting LLC
Project Number: 663-010
Project Name: Allison's Norge Village
Project Manager: Carla Broch
Sampled by: BDG

Turnaround Request (in working days)

(Check One)

- ☐ Same Day ☐ 1 Day
- ☐ 2 Day ☐ 3 Day
- ☒ Standard (7 working days)
  (TPH analysis 5 working days)
- ☐ _____ (other)

Laboratory Number: 08-240

Requested Analysis

Lab ID	Sample Identification	Date Sampled	Time Sampled	Matrix	# of Cont.	NWTPH-HCID	NWTPH-Gx/BTEX	NWTPH-Dx	Volatiles by 8260B	Halogenated Volatiles by 8260B	Semivolatiles by 8270C	PAHs by 8270C / SIM	PCBs by 8082	Pesticides by 8081A	Herbicides by 8151A	Total RCRA Metals (8)	TCLP Metals	HEM by 1664	VPH	EPH				% Moisture
11	MW10-86-87	8/25/06	14:09	S	4																			
12	MW10-96	8/25/06	14:20																					
13	MW10-106-107		15:00																					
14	MW10-113-114		15:46																					
15	MW10-116-117		15:54							☒														☒

BDG

	Signature	Company	Date	Time
Relinquished by	Brian Gouw	Farallon	8/25/06	16:25
Received by				
Relinquished by				
Received by				
Relinquished by				
Received by				

Comments/Special Instructions:
Hold all samples until notified for required analysis
☒ Added 8/29/06. DB.

Reviewed by/Date

Reviewed by/Date

Chromatograms with final report ☐

DISTRIBUTION LEGEND: White - OnSite Copy Yellow - Report Copy Pink - Client Copy

OnSite Environmental Inc.
14648 NE 95th Street, Redmond, WA 98052 • (425) 883-3881

August 30, 2006

Carla Brock
Farallon Consulting, LLC
320 3rd Avenue NE, Suite 200
Issaquah, WA 98027

Re: Analytical Data for Project 663-010
Laboratory Reference No. 0608-214

Dear Carla:

Enclosed are the analytical results and associated quality control data for samples submitted on August 23, 2006.

The standard policy of OnSite Environmental Inc. is to store your samples for 30 days from the date of receipt. If you require longer storage, please contact the laboratory.

We appreciate the opportunity to be of service to you on this project. If you have any questions concerning the data, or need additional information, please feel free to call me.

Sincerely,

David Baumeister
Project Manager

Enclosures

This report pertains to the samples analyzed in accordance with the chain of custody, and is intended only for the use of the individual or company to whom it is addressed.

Date of Report: August 30, 2006
Samples Submitted: August 23, 2006
Laboratory Reference: 0608-214
Project: 663-010

Case Narrative

Samples were collected on August 23, 2006 and received by the laboratory on August 23, 2006. They were maintained at the laboratory at a temperature of 2°C to 6°C except as noted below.

General QA/QC issues associated with the analytical data enclosed in this laboratory report will be indicated with a reference to a comment or explanation on the Data Qualifier page. More complex and involved QA/QC issues will be discussed in detail below.

Halogenated Volatiles EPA 8260B Analysis

Per EPA Method 5035A, samples were received by the laboratory in pre-weighed 40 mL VOA vials within 48 hours of sample collection. They were stored in a freezer at between -7°C and -20°C until extraction or analysis.

Any other QA/QC issues associated with this extraction and analysis will be indicated with a footnote reference and discussed in detail on the Data Qualifier page.

This report pertains to the samples analyzed in accordance with the chain of custody,
and is intended only for the use of the individual or company to whom it is addressed.

Date of Report: August 30, 2006
Samples Submitted: August 23, 2006
Laboratory Reference: 0608-214
Project: 663-010

HALOGENATED VOLATILES by EPA 8260B

Date Extracted: 8-25-06
Date Analyzed: 8-25-06

Matrix: Soil
Units: mg/kg (ppm)

Lab ID: 08-214-02
Client ID: MW9-9-10

Compound	Results	Flags	PQL
Dichlorodifluoromethane	ND		0.00090
Chloromethane	ND		0.0045
Vinyl Chloride	ND		0.00090
Bromomethane	ND		0.00090
Chloroethane	ND		0.0045
Trichlorofluoromethane	ND		0.00090
1,1-Dichloroethene	ND		0.00090
Iodomethane	ND		0.0045
Methylene Chloride	ND		0.0045
(trans) 1,2-Dichloroethene	ND		0.00090
1,1-Dichloroethane	ND		0.00090
2,2-Dichloropropane	ND		0.00090
(cis) 1,2-Dichloroethene	ND		0.00090
Bromochloromethane	ND		0.00090
Chloroform	ND		0.00090
1,1,1-Trichloroethane	ND		0.00090
Carbon Tetrachloride	ND		0.00090
1,1-Dichloropropene	ND		0.00090
1,2-Dichloroethane	ND		0.00090
Trichloroethene	ND		0.00090
1,2-Dichloropropane	ND		0.00090
Dibromomethane	ND		0.00090
Bromodichloromethane	ND		0.00090
2-Chloroethyl Vinyl Ether	ND		0.0045
(cis) 1,3-Dichloropropene	ND		0.00090
(trans) 1,3-Dichloropropene	ND		0.00090

This report pertains to the samples analyzed in accordance with the chain of custody,
and is intended only for the use of the individual or company to whom it is addressed.

Date of Report: August 30, 2006
Samples Submitted: August 23, 2006
Laboratory Reference: 0608-214
Project: 663-010

HALOGENATED VOLATILES by EPA 8260B
page 2 of 2

Lab ID: 08-214-02
Client ID: MW9-9-10

Compound	Results	Flags	PQL
1,1,2-Trichloroethane	ND		0.00090
Tetrachloroethene	0.0024		0.00090
1,3-Dichloropropane	ND		0.00090
Dibromochloromethane	ND		0.00090
1,2-Dibromoethane	ND		0.00090
Chlorobenzene	ND		0.00090
1,1,1,2-Tetrachloroethane	ND		0.00090
Bromoform	ND		0.00090
Bromobenzene	ND		0.00090
1,1,2,2-Tetrachloroethane	ND		0.00090
1,2,3-Trichloropropane	ND		0.00090
2-Chlorotoluene	ND		0.00090
4-Chlorotoluene	ND		0.00090
1,3-Dichlorobenzene	ND		0.00090
1,4-Dichlorobenzene	ND		0.00090
1,2-Dichlorobenzene	ND		0.00090
1,2-Dibromo-3-chloropropane	ND		0.0045
1,2,4-Trichlorobenzene	ND		0.00090
Hexachlorobutadiene	ND		0.0045
1,2,3-Trichlorobenzene	ND		0.00090

Surrogate	Percent Recovery	Control Limits
Dibromofluoromethane	76	71-126
Toluene, d8	77	73-130
4-Bromofluorobenzene	89	70-130

This report pertains to the samples analyzed in accordance with the chain of custody,
and is intended only for the use of the individual or company to whom it is addressed.

Date of Report: August 30, 2006
Samples Submitted: August 23, 2006
Laboratory Reference: 0608-214
Project: 663-010

HALOGENATED VOLATILES by EPA 8260B
page 1 of 2

Date Extracted: 8-25-06
Date Analyzed: 8-25-06

Matrix: Soil
Units: mg/kg (ppm)

Lab ID: 08-214-06
Client ID: MW9-29-30

Compound	Results	Flags	PQL
Dichlorodifluoromethane	ND		0.00075
Chloromethane	ND		0.0038
Vinyl Chloride	ND		0.00075
Bromomethane	ND		0.00075
Chloroethane	ND		0.0038
Trichlorofluoromethane	ND		0.00075
1,1-Dichloroethene	ND		0.00075
Iodomethane	ND		0.0038
Methylene Chloride	ND		0.0038
(trans) 1,2-Dichloroethene	ND		0.00075
1,1-Dichloroethane	ND		0.00075
2,2-Dichloropropane	ND		0.00075
(cis) 1,2-Dichloroethene	ND		0.00075
Bromochloromethane	ND		0.00075
Chloroform	ND		0.00075
1,1,1-Trichloroethane	ND		0.00075
Carbon Tetrachloride	ND		0.00075
1,1-Dichloropropene	ND		0.00075
1,2-Dichloroethane	ND		0.00075
Trichloroethene	ND		0.00075
1,2-Dichloropropane	ND		0.00075
Dibromomethane	ND		0.00075
Bromodichloromethane	ND		0.00075
2-Chloroethyl Vinyl Ether	ND		0.0038
(cis) 1,3-Dichloropropene	ND		0.00075
(trans) 1,3-Dichloropropene	ND		0.00075

This report pertains to the samples analyzed in accordance with the chain of custody,
and is intended only for the use of the individual or company to whom it is addressed.

Date of Report: August 30, 2006
Samples Submitted: August 23, 2006
Laboratory Reference: 0608-214
Project: 663-010

HALOGENATED VOLATILES by EPA 8260B
page 2 of 2

Lab ID: 08-214-06
Client ID: MW9-29-30

Compound	Results	Flags	PQL
1,1,2-Trichloroethane	ND		0.00075
Tetrachloroethene	0.0029		0.00075
1,3-Dichloropropane	ND		0.00075
Dibromochloromethane	ND		0.00075
1,2-Dibromoethane	ND		0.00075
Chlorobenzene	ND		0.00075
1,1,1,2-Tetrachloroethane	ND		0.00075
Bromoform	ND		0.00075
Bromobenzene	ND		0.00075
1,1,2,2-Tetrachloroethane	ND		0.00075
1,2,3-Trichloropropane	ND		0.00075
2-Chlorotoluene	ND		0.00075
4-Chlorotoluene	ND		0.00075
1,3-Dichlorobenzene	ND		0.00075
1,4-Dichlorobenzene	ND		0.00075
1,2-Dichlorobenzene	ND		0.00075
1,2-Dibromo-3-chloropropane	ND		0.0038
1,2,4-Trichlorobenzene	ND		0.00075
Hexachlorobutadiene	ND		0.0038
1,2,3-Trichlorobenzene	ND		0.00075

Surrogate	Percent Recovery	Control Limits
Dibromofluoromethane	78	71-126
Toluene, d8	95	73-130
4-Bromofluorobenzene	91	70-130

This report pertains to the samples analyzed in accordance with the chain of custody,
and is intended only for the use of the individual or company to whom it is addressed.

Date of Report: August 30, 2006
Samples Submitted: August 23, 2006
Laboratory Reference: 0608-214
Project: 663-010

HALOGENATED VOLATILES by EPA 8260B

Date Extracted: 8-25-06
Date Analyzed: 8-25-06

Matrix: Soil
Units: mg/kg (ppm)

Lab ID: 08-214-10
Client ID: MW9-50-51

Compound	Results	Flags	PQL
Dichlorodifluoromethane	ND		0.00088
Chloromethane	ND		0.0044
Vinyl Chloride	ND		0.00088
Bromomethane	ND		0.00088
Chloroethane	ND		0.0044
Trichlorofluoromethane	ND		0.00088
1,1-Dichloroethene	ND		0.00088
Iodomethane	ND		0.0044
Methylene Chloride	ND		0.0044
(trans) 1,2-Dichloroethene	ND		0.00088
1,1-Dichloroethane	ND		0.00088
2,2-Dichloropropane	ND		0.00088
(cis) 1,2-Dichloroethene	ND		0.00088
Bromochloromethane	ND		0.00088
Chloroform	ND		0.00088
1,1,1-Trichloroethane	ND		0.00088
Carbon Tetrachloride	ND		0.00088
1,1-Dichloropropene	ND		0.00088
1,2-Dichloroethane	ND		0.00088
Trichloroethene	ND		0.00088
1,2-Dichloropropane	ND		0.00088
Dibromomethane	ND		0.00088
Bromodichloromethane	ND		0.00088
2-Chloroethyl Vinyl Ether	ND		0.0044
(cis) 1,3-Dichloropropene	ND		0.00088
(trans) 1,3-Dichloropropene	ND		0.00088

This report pertains to the samples analyzed in accordance with the chain of custody,
and is intended only for the use of the individual or company to whom it is addressed.

Date of Report: August 30, 2006
Samples Submitted: August 23, 2006
Laboratory Reference: 0608-214
Project: 663-010

HALOGENATED VOLATILES by EPA 8260B
page 2 of 2

Lab ID: 08-214-10
Client ID: MW9-50-51

Compound	**Results**	**Flags**	**PQL**
1,1,2-Trichloroethane	ND		0.00088
Tetrachloroethene	0.019		0.00088
1,3-Dichloropropane	ND		0.00088
Dibromochloromethane	ND		0.00088
1,2-Dibromoethane	ND		0.00088
Chlorobenzene	ND		0.00088
1,1,1,2-Tetrachloroethane	ND		0.00088
Bromoform	ND		0.00088
Bromobenzene	ND		0.00088
1,1,2,2-Tetrachloroethane	ND		0.00088
1,2,3-Trichloropropane	ND		0.00088
2-Chlorotoluene	ND		0.00088
4-Chlorotoluene	ND		0.00088
1,3-Dichlorobenzene	ND		0.00088
1,4-Dichlorobenzene	ND		0.00088
1,2-Dichlorobenzene	ND		0.00088
1,2-Dibromo-3-chloropropane	ND		0.0044
1,2,4-Trichlorobenzene	ND		0.00088
Hexachlorobutadiene	ND		0.0044
1,2,3-Trichlorobenzene	ND		0.00088

Surrogate	**Percent Recovery**	**Control Limits**
Dibromofluoromethane	73	71-126
Toluene, d8	89	73-130
4-Bromofluorobenzene	91	70-130

This report pertains to the samples analyzed in accordance with the chain of custody,
and is intended only for the use of the individual or company to whom it is addressed.

Date of Report: August 30, 2006
Samples Submitted: August 23, 2006
Laboratory Reference: 0608-214
Project: 663-010

HALOGENATED VOLATILES by EPA 8260B
METHOD BLANK QUALITY CONTROL
page 1 of 2

Date Extracted: 8-25-06
Date Analyzed: 8-25-06

Matrix: Soil
Units: mg/kg (ppm)

Lab ID: MB0825S1

Compound	Results	Flags	PQL
Dichlorodifluoromethane	ND		0.0010
Chloromethane	ND		0.0050
Vinyl Chloride	ND		0.0010
Bromomethane	ND		0.0010
Chloroethane	ND		0.0050
Trichlorofluoromethane	ND		0.0010
1,1-Dichloroethene	ND		0.0010
Iodomethane	ND		0.0050
Methylene Chloride	ND		0.0050
(trans) 1,2-Dichloroethene	ND		0.0010
1,1-Dichloroethane	ND		0.0010
2,2-Dichloropropane	ND		0.0010
(cis) 1,2-Dichloroethene	ND		0.0010
Bromochloromethane	ND		0.0010
Chloroform	ND		0.0010
1,1,1-Trichloroethane	ND		0.0010
Carbon Tetrachloride	ND		0.0010
1,1-Dichloropropene	ND		0.0010
1,2-Dichloroethane	ND		0.0010
Trichloroethene	ND		0.0010
1,2-Dichloropropane	ND		0.0010
Dibromomethane	ND		0.0010
Bromodichloromethane	ND		0.0010
2-Chloroethyl Vinyl Ether	ND		0.0050
(cis) 1,3-Dichloropropene	ND		0.0010
(trans) 1,3-Dichloropropene	ND		0.0010

This report pertains to the samples analyzed in accordance with the chain of custody,
and is intended only for the use of the individual or company to whom it is addressed.

Date of Report: August 30, 2006
Samples Submitted: August 23, 2006
Laboratory Reference: 0608-214
Project: 663-010

HALOGENATED VOLATILES by EPA 8260B
METHOD BLANK QUALITY CONTROL
page 2 of 2

Lab ID: MB0825S1

Compound	Results	Flags	PQL
1,1,2-Trichloroethane	ND		0.0010
Tetrachloroethene	ND		0.0010
1,3-Dichloropropane	ND		0.0010
Dibromochloromethane	ND		0.0010
1,2-Dibromoethane	ND		0.0010
Chlorobenzene	ND		0.0010
1,1,1,2-Tetrachloroethane	ND		0.0010
Bromoform	ND		0.0010
Bromobenzene	ND		0.0010
1,1,2,2-Tetrachloroethane	ND		0.0010
1,2,3-Trichloropropane	ND		0.0010
2-Chlorotoluene	ND		0.0010
4-Chlorotoluene	ND		0.0010
1,3-Dichlorobenzene	ND		0.0010
1,4-Dichlorobenzene	ND		0.0010
1,2-Dichlorobenzene	ND		0.0010
1,2-Dibromo-3-chloropropane	ND		0.0050
1,2,4-Trichlorobenzene	ND		0.0010
Hexachlorobutadiene	ND		0.0050
1,2,3-Trichlorobenzene	ND		0.0010

Surrogate	Percent Recovery	Control Limits
Dibromofluoromethane	73	71-126
Toluene, d8	91	73-130
4-Bromofluorobenzene	96	70-130

This report pertains to the samples analyzed in accordance with the chain of custody,
and is intended only for the use of the individual or company to whom it is addressed.

Date of Report: August 30, 2006
Samples Submitted: August 23, 2006
Laboratory Reference: 0608-214
Project: 663-010

HALOGENATED VOLATILES by EPA 8260B
SB/SBD QUALITY CONTROL

Date Extracted: 8-25-06
Date Analyzed: 8-25-06

Matrix: Soil
Units: mg/kg (ppm)

Lab ID: SB0825S1

Compound	Spike Amount	SB	Percent Recovery	SBD	Percent Recovery	Recovery Limits	Flags
1,1-Dichloroethene	0.0500	0.0432	86	0.0425	85	70-130	
Benzene	0.0500	0.0397	79	0.0398	80	70-130	
Trichloroethene	0.0500	0.0471	94	0.0477	95	70-130	
Toluene	0.0500	0.0466	93	0.0481	96	70-130	
Chlorobenzene	0.0500	0.0528	106	0.0533	107	70-130	

	RPD	RPD Limit	Flags
1,1-Dichloroethene	1	11	
Benzene	0	11	
Trichloroethene	1	13	
Toluene	3	11	
Chlorobenzene	1	12	

This report pertains to the samples analyzed in accordance with the chain of custody,
and is intended only for the use of the individual or company to whom it is addressed.

Date of Report: August 30, 2006
Samples Submitted: August 23, 2006
Laboratory Reference: 0608-214
Project: 663-010

% MOISTURE

Date Analyzed: 8-25-06

Client ID	Lab ID	% Moisture
MW9-9-10	08-214-02	6
MW9-29-30	08-214-06	9
MW9-50-51	08-214-10	14

This report pertains to the samples analyzed in accordance with the chain of custody,
and is intended only for the use of the individual or company to whom it is addressed.

OnSite Environmental Inc.

Data Qualifiers and Abbreviations

A - Due to a high sample concentration, the amount spiked is insufficient for meaningful MS/MSD recovery data.

B - The analyte indicated was also found in the blank sample.

C - The duplicate RPD is outside control limits due to high result variability when analyte concentrations are within five times the quantitation limit.

E - The value reported exceeds the quantitation range and is an estimate.

F - Surrogate recovery data is not available due to the high concentration of coeluting target compounds.

G - Insufficient sample quantity for duplicate analysis.

H - The analyte indicated is a common laboratory solvent and may have been introduced during sample preparation, and be impacting the sample result.

I - Compound recovery is outside of the control limits.

J - The value reported was below the practical quantitation limit. The value is an estimate.

K - Sample duplicate RPD is outside control limits due to sample inhomogeneity. The sample was re-extracted and re-analyzed with similar results.

L - The RPD is outside of the control limits.

M - Hydrocarbons in the gasoline range (toluene-napthalene) are present in the sample.

O - Hydrocarbons indicative of diesel fuel are present in the sample and are impacting the gasoline result.

P - The RPD of the detected concentrations between the two columns is greater than 40.

Q - Surrogate recovery is outside of the control limits.

S - Surrogate recovery data is not available due to the necessary dilution of the sample.

T - The sample chromatogram is not similar to a typical _____.

U - The analyte was analyzed for, but was not detected above the reported sample quantitation limit.

V - Matrix Spike/Matrix Spike Duplicate recoveries are outside control limits due to matrix effects.

W - Matrix Spike/Matrix Spike Duplicate RPD are outside control limits due to matrix effects.

X - Sample extract treated with a silica gel cleanup procedure.

Y - Sample extract treated with an acid/silica gel cleanup procedure.

Z -

ND - Not Detected at PQL
PQL - Practical Quantitation Limit
RPD - Relative Percent Difference

This report pertains to the samples analyzed in accordance with the chain of custody, and is intended only for the use of the individual or company to whom it is addressed.

Chain of Custody

Page 1 of 1

OnSite Environmental Inc.
14648 NE 95th Street • Redmond, WA 98052
Phone: (425) 883-3881 • Fax: (425) 885-4603

Company: FARALLON
Project Number: 663-010
Project Name: ALLISON'S NORGE VILLAGE
Project Manager: CARLA BROCK
Sampled by: J Schmitt

Turnaround Request (in working days)
(Check One)
☐ Same Day ☐ 1 Day
☐ 2 Day ☐ 3 Day
☒ Standard (7 working days)
(TPH analysis 5 working days)
☐ _____ (other)

Laboratory Number: 08-214

Requested Analysis

Lab ID	Sample Identification	Date Sampled	Time Sampled	Matrix	# of Cont.	NWTPH-HCID	NWTPH-Gx/BTEX	NWTPH-Dx	Volatiles by 8260B	Halogenated Volatiles by 8260B	Semivolatiles by 8270C	PAHs by 8270C / SIM	PCBs by 8082	Pesticides by 8081A	Herbicides by 8151A	Total RCRA Metals (8)	TCLP Metals	HEM by 1664	VPH	EPH	% Moisture
1	MW9-6-7	8/23/06	0736	S	4																
2	MW9-9-10		0740							⊗											⊗
3	MW9-16-17		0750																		
4	MW9-19-20		0752																		
5	MW9-25		0804																		
6	MW9-29-30		0806							⊗											⊗
7	MW9 35-36		0848																		
8	MW9-40-41		0936																		
9	MW9-45-46		0944																		
10	MW9-50-51		1028							⊗											⊗

	Signature	Company	Date	Time
Relinquished by		Farallon	8/23/06	1320
Received by		Spredy	8/23	1320
Relinquished by				
Received by			8/23/06	1640
Relinquished by				
Received by				
Reviewed by/Date		Reviewed by/Date		

Comments/Special Instructions:
⊗ Added 8/24/06. DB.

Chromatograms with final report ☐

DISTRIBUTION LEGEND: White - OnSite Copy Yellow - Report Copy Pink - Client Copy

OnSite Environmental Inc.
14648 NE 95th Street, Redmond, WA 98052 • (425) 883-3881

September 7, 2006

Carla Brock
Farallon Consulting, LLC
320 3rd Avenue NE, Suite 200
Issaquah, WA 98027

Re: Analytical Data for Project 663-010
Laboratory Reference No. 0608-225

Dear Carla:

Enclosed are the analytical results and associated quality control data for samples submitted on August 24, 2006.

The standard policy of OnSite Environmental Inc. is to store your samples for 30 days from the date of receipt. If you require longer storage, please contact the laboratory.

We appreciate the opportunity to be of service to you on this project. If you have any questions concerning the data, or need additional information, please feel free to call me.

Sincerely,

David Baumeister
Project Manager

Enclosures

This report pertains to the samples analyzed in accordance with the chain of custody, and is intended only for the use of the individual or company to whom it is addressed.

Date of Report: September 7, 2006
Samples Submitted: August 24, 2006
Laboratory Reference: 0608-225
Project: 663-010

Case Narrative

Samples were collected on August 23 and 24, 2006 and received by the laboratory on August 24, 2006. They were maintained at the laboratory at a temperature of 2°C to 6°C except as noted below.

General QA/QC issues associated with the analytical data enclosed in this laboratory report will be indicated with a reference to a comment or explanation on the Data Qualifier page. More complex and involved QA/QC issues will be discussed in detail below.

This report pertains to the samples analyzed in accordance with the chain of custody, and is intended only for the use of the individual or company to whom it is addressed.

Date of Report: September 7, 2006
Samples Submitted: August 24, 2006
Laboratory Reference: 0608-225
Project: 663-010

HALOGENATED VOLATILES by EPA 8260B
page 1 of 2

Date Extracted: 8-31-06
Date Analyzed: 8-31-06

Matrix: Soil
Units: mg/kg (ppm)

Lab ID: 08-225-06
Client ID: MW 9-109-110

Compound	Results	Flags	PQL
Dichlorodifluoromethane	ND		0.00063
Chloromethane	ND		0.00063
Vinyl Chloride	ND		0.00063
Bromomethane	ND		0.00063
Chloroethane	ND		0.0032
Trichlorofluoromethane	ND		0.00063
1,1-Dichloroethene	ND		0.00063
Iodomethane	ND		0.0032
Methylene Chloride	ND		0.0032
(trans) 1,2-Dichloroethene	ND		0.00063
1,1-Dichloroethane	ND		0.00063
2,2-Dichloropropane	ND		0.00063
(cis) 1,2-Dichloroethene	ND		0.00063
Bromochloromethane	ND		0.00063
Chloroform	ND		0.00063
1,1,1-Trichloroethane	ND		0.00063
Carbon Tetrachloride	ND		0.00063
1,1-Dichloropropene	ND		0.00063
1,2-Dichloroethane	ND		0.00063
Trichloroethene	ND		0.00063
1,2-Dichloropropane	ND		0.00063
Dibromomethane	ND		0.00063
Bromodichloromethane	ND		0.00063
2-Chloroethyl Vinyl Ether	ND		0.0032
(cis) 1,3-Dichloropropene	ND		0.00063
(trans) 1,3-Dichloropropene	ND		0.00063

This report pertains to the samples analyzed in accordance with the chain of custody,
and is intended only for the use of the individual or company to whom it is addressed.

Date of Report: September 7, 2006
Samples Submitted: August 24, 2006
Laboratory Reference: 0608-225
Project: 663-010

HALOGENATED VOLATILES by EPA 8260B
page 2 of 2

Lab ID: 08-225-06
Client ID: MW 9-109-110

Compound	Results	Flags	PQL
1,1,2-Trichloroethane	ND		0.00063
Tetrachloroethene	ND		0.00063
1,3-Dichloropropane	ND		0.00063
Dibromochloromethane	ND		0.00063
1,2-Dibromoethane	ND		0.00063
Chlorobenzene	ND		0.00063
1,1,1,2-Tetrachloroethane	ND		0.00063
Bromoform	ND		0.00063
Bromobenzene	ND		0.00063
1,1,2,2-Tetrachloroethane	ND		0.00063
1,2,3-Trichloropropane	ND		0.00063
2-Chlorotoluene	ND		0.00063
4-Chlorotoluene	ND		0.00063
1,3-Dichlorobenzene	ND		0.00063
1,4-Dichlorobenzene	ND		0.00063
1,2-Dichlorobenzene	ND		0.00063
1,2-Dibromo-3-chloropropane	ND		0.0032
1,2,4-Trichlorobenzene	ND		0.00063
Hexachlorobutadiene	ND		0.0032
1,2,3-Trichlorobenzene	ND		0.00063

Surrogate	Percent Recovery	Control Limits
Dibromofluoromethane	113	71-126
Toluene, d8	82	73-130
4-Bromofluorobenzene	96	70-130

This report pertains to the samples analyzed in accordance with the chain of custody,
and is intended only for the use of the individual or company to whom it is addressed.

Date of Report: September 7, 2006
Samples Submitted: August 24, 2006
Laboratory Reference: 0608-225
Project: 663-010

HALOGENATED VOLATILES by EPA 8260B
page 1 of 2

Date Extracted: 8-31-06
Date Analyzed: 8-31-06

Matrix: Soil
Units: mg/kg (ppm)

Lab ID: 08-225-07
Client ID: MW 9-117-118

Compound	Results	Flags	PQL
Dichlorodifluoromethane	ND		0.0011
Chloromethane	ND		0.0011
Vinyl Chloride	ND		0.0011
Bromomethane	ND		0.0011
Chloroethane	ND		0.0053
Trichlorofluoromethane	ND		0.0011
1,1-Dichloroethene	ND		0.0011
Iodomethane	ND		0.0053
Methylene Chloride	ND		0.0053
(trans) 1,2-Dichloroethene	ND		0.0011
1,1-Dichloroethane	ND		0.0011
2,2-Dichloropropane	ND		0.0011
(cis) 1,2-Dichloroethene	ND		0.0011
Bromochloromethane	ND		0.0011
Chloroform	ND		0.0011
1,1,1-Trichloroethane	ND		0.0011
Carbon Tetrachloride	ND		0.0011
1,1-Dichloropropene	ND		0.0011
1,2-Dichloroethane	ND		0.0011
Trichloroethene	ND		0.0011
1,2-Dichloropropane	ND		0.0011
Dibromomethane	ND		0.0011
Bromodichloromethane	ND		0.0011
2-Chloroethyl Vinyl Ether	ND		0.0053
(cis) 1,3-Dichloropropene	ND		0.0011
(trans) 1,3-Dichloropropene	ND		0.0011

This report pertains to the samples analyzed in accordance with the chain of custody,
and is intended only for the use of the individual or company to whom it is addressed.

Date of Report: September 7, 2006
Samples Submitted: August 24, 2006
Laboratory Reference: 0608-225
Project: 663-010

HALOGENATED VOLATILES by EPA 8260B
page 2 of 2

Lab ID: 08-225-07
Client ID: MW 9-117-118

Compound	Results	Flags	PQL
1,1,2-Trichloroethane	ND		0.0011
Tetrachloroethene	ND		0.0011
1,3-Dichloropropane	ND		0.0011
Dibromochloromethane	ND		0.0011
1,2-Dibromoethane	ND		0.0011
Chlorobenzene	ND		0.0011
1,1,1,2-Tetrachloroethane	ND		0.0011
Bromoform	ND		0.0011
Bromobenzene	ND		0.0011
1,1,2,2-Tetrachloroethane	ND		0.0011
1,2,3-Trichloropropane	ND		0.0011
2-Chlorotoluene	ND		0.0011
4-Chlorotoluene	ND		0.0011
1,3-Dichlorobenzene	ND		0.0011
1,4-Dichlorobenzene	ND		0.0011
1,2-Dichlorobenzene	ND		0.0011
1,2-Dibromo-3-chloropropane	ND		0.0053
1,2,4-Trichlorobenzene	ND		0.0011
Hexachlorobutadiene	ND		0.0053
1,2,3-Trichlorobenzene	ND		0.0011

Surrogate	Percent Recovery	Control Limits
Dibromofluoromethane	108	71-126
Toluene, d8	99	73-130
4-Bromofluorobenzene	105	70-130

This report pertains to the samples analyzed in accordance with the chain of custody,
and is intended only for the use of the individual or company to whom it is addressed.

Date of Report: September 7, 2006
Samples Submitted: August 24, 2006
Laboratory Reference: 0608-225
Project: 663-010

HALOGENATED VOLATILES by EPA 8260B
METHOD BLANK QUALITY CONTROL
page 1 of 2

Date Extracted: 8-31-06
Date Analyzed: 8-31-06

Matrix: Soil
Units: mg/kg (ppm)

Lab ID: MB0831S1

Compound	Results	Flags	PQL
Dichlorodifluoromethane	ND		0.0010
Chloromethane	ND		0.0010
Vinyl Chloride	ND		0.0010
Bromomethane	ND		0.0010
Chloroethane	ND		0.0050
Trichlorofluoromethane	ND		0.0010
1,1-Dichloroethene	ND		0.0010
Iodomethane	ND		0.0050
Methylene Chloride	ND		0.0050
(trans) 1,2-Dichloroethene	ND		0.0010
1,1-Dichloroethane	ND		0.0010
2,2-Dichloropropane	ND		0.0010
(cis) 1,2-Dichloroethene	ND		0.0010
Bromochloromethane	ND		0.0010
Chloroform	ND		0.0010
1,1,1-Trichloroethane	ND		0.0010
Carbon Tetrachloride	ND		0.0010
1,1-Dichloropropene	ND		0.0010
1,2-Dichloroethane	ND		0.0010
Trichloroethene	ND		0.0010
1,2-Dichloropropane	ND		0.0010
Dibromomethane	ND		0.0010
Bromodichloromethane	ND		0.0010
2-Chloroethyl Vinyl Ether	ND		0.0050
(cis) 1,3-Dichloropropene	ND		0.0010
(trans) 1,3-Dichloropropene	ND		0.0010

This report pertains to the samples analyzed in accordance with the chain of custody,
and is intended only for the use of the individual or company to whom it is addressed.

Date of Report: September 7, 2006
Samples Submitted: August 24, 2006
Laboratory Reference: 0608-225
Project: 663-010

HALOGENATED VOLATILES by EPA 8260B
METHOD BLANK QUALITY CONTROL
page 2 of 2

Lab ID: MB0831S1

Compound	Results	Flags	PQL
1,1,2-Trichloroethane	ND		0.0010
Tetrachloroethene	ND		0.0010
1,3-Dichloropropane	ND		0.0010
Dibromochloromethane	ND		0.0010
1,2-Dibromoethane	ND		0.0010
Chlorobenzene	ND		0.0010
1,1,1,2-Tetrachloroethane	ND		0.0010
Bromoform	ND		0.0010
Bromobenzene	ND		0.0010
1,1,2,2-Tetrachloroethane	ND		0.0010
1,2,3-Trichloropropane	ND		0.0010
2-Chlorotoluene	ND		0.0010
4-Chlorotoluene	ND		0.0010
1,3-Dichlorobenzene	ND		0.0010
1,4-Dichlorobenzene	ND		0.0010
1,2-Dichlorobenzene	ND		0.0010
1,2-Dibromo-3-chloropropane	ND		0.0050
1,2,4-Trichlorobenzene	ND		0.0010
Hexachlorobutadiene	ND		0.0050
1,2,3-Trichlorobenzene	ND		0.0010

Surrogate	Percent Recovery	Control Limits
Dibromofluoromethane	93	71-126
Toluene, d8	91	73-130
4-Bromofluorobenzene	114	70-130

This report pertains to the samples analyzed in accordance with the chain of custody,
and is intended only for the use of the individual or company to whom it is addressed.

Date of Report: September 7, 2006
Samples Submitted: August 24, 2006
Laboratory Reference: 0608-225
Project: 663-010

HALOGENATED VOLATILES by EPA 8260B
SB/SBD QUALITY CONTROL

Date Extracted: 8-31-06
Date Analyzed: 8-31-06

Matrix: Soil
Units: mg/kg (ppm)

Lab ID: SB0831S1

Compound	Spike Amount	SB	Percent Recovery	SBD	Percent Recovery	Recovery Limits	Flags
1,1-Dichloroethene	0.0500	0.0541	108	0.0544	109	70-130	
Benzene	0.0500	0.0421	84	0.0465	93	70-130	
Trichloroethene	0.0500	0.0461	92	0.0493	99	70-130	
Toluene	0.0500	0.0441	88	0.0486	97	70-130	
Chlorobenzene	0.0500	0.0503	101	0.0528	106	70-130	

	RPD	RPD Limit	Flags
1,1-Dichloroethene	1	11	
Benzene	10	11	
Trichloroethene	7	13	
Toluene	10	11	
Chlorobenzene	5	12	

This report pertains to the samples analyzed in accordance with the chain of custody,
and is intended only for the use of the individual or company to whom it is addressed.

Date of Report: September 7, 2006
Samples Submitted: August 24, 2006
Laboratory Reference: 0608-225
Project: 663-010

% MOISTURE

Date Analyzed: 8-31-06

Client ID	Lab ID	% Moisture
MW-9-109-110	08-225-06	13
MW-9-117-118	08-225-07	26

This report pertains to the samples analyzed in accordance with the chain of custody,
and is intended only for the use of the individual or company to whom it is addressed.

OnSite Environmental Inc.

Data Qualifiers and Abbreviations

A - Due to a high sample concentration, the amount spiked is insufficient for meaningful MS/MSD recovery data.

B - The analyte indicated was also found in the blank sample.

C - The duplicate RPD is outside control limits due to high result variability when analyte concentrations are within five times the quantitation limit.

E - The value reported exceeds the quantitation range and is an estimate.

F - Surrogate recovery data is not available due to the high concentration of coeluting target compounds.

G - Insufficient sample quantity for duplicate analysis.

H - The analyte indicated is a common laboratory solvent and may have been introduced during sample preparation, and be impacting the sample result.

I - Compound recovery is outside of the control limits.

J - The value reported was below the practical quantitation limit. The value is an estimate.

K - Sample duplicate RPD is outside control limits due to sample inhomogeneity. The sample was re-extracted and re-analyzed with similar results.

L - The RPD is outside of the control limits.

M - Hydrocarbons in the gasoline range (toluene-napthalene) are present in the sample.

O - Hydrocarbons indicative of diesel fuel are present in the sample and are impacting the gasoline result.

P - The RPD of the detected concentrations between the two columns is greater than 40.

Q - Surrogate recovery is outside of the control limits.

S - Surrogate recovery data is not available due to the necessary dilution of the sample.

T - The sample chromatogram is not similar to a typical _____.

U - The analyte was analyzed for, but was not detected above the reported sample quantitation limit.

V - Matrix Spike/Matrix Spike Duplicate recoveries are outside control limits due to matrix effects.

W - Matrix Spike/Matrix Spike Duplicate RPD are outside control limits due to matrix effects.

X - Sample extract treated with a silica gel cleanup procedure.

Y - Sample extract treated with an acid/silica gel cleanup procedure.

Z -

ND - Not Detected at PQL
PQL - Practical Quantitation Limit
RPD - Relative Percent Difference

This report pertains to the samples analyzed in accordance with the chain of custody, and is intended only for the use of the individual or company to whom it is addressed.

Chain of Custody

OnSite Environmental Inc.
14648 NE 95th Street • Redmond, WA 98052
Phone: (425) 883-3881 • Fax: (425) 885-4603

Company: Farallon Consulting
Project Number: 663-010
Project Name: Allison's Norse Village
Project Manager: Carla Brock
Sampled by: JAS / BDG

Turnaround Request (in working days)

(Check One)

- ☐ Same Day
- ☐ 1 Day
- ☐ 2 Day
- ☐ 3 Day
- ☒ Standard (7 working days)
  (TPH analysis 5 working days)
- ☐ _____ (other)

Laboratory Number: 08-225

Requested Analysis

Lab ID	Sample Identification	Date Sampled	Time Sampled	Matrix	# of Cont.	NWTPH-HCID	NWTPH-Gx/BTEX	NWTPH-Dx	Volatiles by 8260B	Halogenated Volatiles by 8260B	Semivolatiles by 8270C	PAHs by 8270C / SIM	PCBs by 8082	Pesticides by 8081A	Herbicides by 8151A	Total RCRA Metals (8)	TCLP Metals	HEM by 1664	VPH	EPH					% Moisture
1	MW9-60-61	8/23/06	11:08	S	4																				
2	MW9-70-71		12:50																						
3	MW9-80-81		13:35																						
4	MW9-90-91		14:14																						
5	MW9-100-101																								
6	MW9-109-110									⊗															⊗
7	MW9-117-119	8/24/06								⊗															⊗
8	MW9-123-124																								
9	MW9-129																								

	Signature	Company	Date	Time
Relinquished by	Brian Govern	Farallon	8/24/06	13:30
Received by	Jeff Lundberg	SPEEDY	8/24/06	13:30
Relinquished by	Jeff Lundberg	"	"	15:25
Received by		Onsite	8-24-06	1525
Relinquished by				
Received by				
Reviewed by/Date		Reviewed by/Date		

Comments/Special Instructions:

Hold until notified for Analysis

⊗ Added 8/29/06. DB.

Chromatograms with final report ☐

DISTRIBUTION LEGEND: White - OnSite Copy Yellow - Report Copy Pink - Client Copy

OnSite Environmental Inc.
14648 NE 95th Street, Redmond, WA 98052 • (425) 883-3881

April 24, 2007

Carla Brock
Farallon Consulting, LLC
975 5th Avenue NW
Issaquah, WA 98027

Re: Analytical Data for Project 663-010
Laboratory Reference No. 0704-109

Dear Carla:

Enclosed are the analytical results and associated quality control data for samples submitted on April 12, 2007.

The standard policy of OnSite Environmental Inc. is to store your samples for 30 days from the date of receipt. If you require longer storage, please contact the laboratory.

We appreciate the opportunity to be of service to you on this project. If you have any questions concerning the data, or need additional information, please feel free to call me.

Sincerely,

David Baumeister
Project Manager

Enclosures

This report pertains to the samples analyzed in accordance with the chain of custody, and is intended only for the use of the individual or company to whom it is addressed.

Date of Report: April 24, 2007
Samples Submitted: April 12, 2007
Laboratory Reference: 0704-109
Project: 663-010

Case Narrative

Samples were collected on April 11, 2007 and received by the laboratory on April 12, 2007. They were maintained at the laboratory at a temperature of 2°C to 6°C except as noted below.

General QA/QC issues associated with the analytical data enclosed in this laboratory report will be indicated with a reference to a comment or explanation on the Data Qualifier page. More complex and involved QA/QC issues will be discussed in detail below.

This report pertains to the samples analyzed in accordance with the chain of custody, and is intended only for the use of the individual or company to whom it is addressed.

Date of Report: April 24, 2007
Samples Submitted: April 12, 2007
Laboratory Reference: 0704-109
Project: 663-010

HALOGENATED VOLATILES by EPA 8260B
Page 1 of 2

Date Extracted: 4-12-07
Date Analyzed: 4-12-07

Matrix: Air
Units: ug/L (ppb)

Lab ID: 04-109-01
Client ID: Air-Carbon

Compound	Results	Flags	PQL
Dichlorodifluoromethane	ND		1.0
Chloromethane	ND		1.0
Vinyl Chloride	ND		1.0
Bromomethane	ND		1.0
Chloroethane	ND		1.0
Trichlorofluoromethane	ND		1.0
1,1-Dichloroethene	ND		1.0
Iodomethane	ND		5.0
Methylene Chloride	ND		5.0
(trans) 1,2-Dichloroethene	ND		1.0
1,1-Dichloroethane	ND		1.0
2,2-Dichloropropane	ND		1.0
(cis) 1,2-Dichloroethene	ND		1.0
Bromochloromethane	ND		1.0
Chloroform	ND		1.0
1,1,1-Trichloroethane	ND		1.0
Carbon Tetrachloride	ND		1.0
1,1-Dichloropropene	ND		1.0
1,2-Dichloroethane	ND		1.0
Trichloroethene	ND		1.0
1,2-Dichloropropane	ND		1.0
Dibromomethane	ND		1.0
Bromodichloromethane	ND		1.0
2-Chloroethyl Vinyl Ether	ND		5.0
(cis) 1,3-Dichloropropene	ND		1.0
(trans) 1,3-Dichloropropene	ND		1.0

This report pertains to the samples analyzed in accordance with the chain of custody,
and is intended only for the use of the individual or company to whom it is addressed.

Date of Report: April 24, 2007
Samples Submitted: April 12, 2007
Laboratory Reference: 0704-109
Project: 663-010

HALOGENATED VOLATILES by EPA 8260B
Page 2 of 2

Lab ID: 04-109-01
Client ID: Air-Carbon

Compound	Results	Flags	PQL
1,1,2-Trichloroethane	ND		1.0
Tetrachloroethene	ND		1.0
1,3-Dichloropropane	ND		1.0
Dibromochloromethane	ND		1.0
1,2-Dibromoethane	ND		1.0
Chlorobenzene	ND		1.0
1,1,1,2-Tetrachloroethane	ND		1.0
Bromoform	ND		5.0
Bromobenzene	ND		1.0
1,1,2,2-Tetrachloroethane	ND		1.0
1,2,3-Trichloropropane	ND		1.0
2-Chlorotoluene	ND		1.0
4-Chlorotoluene	ND		1.0
1,3-Dichlorobenzene	ND		1.0
1,4-Dichlorobenzene	ND		1.0
1,2-Dichlorobenzene	ND		1.0
1,2-Dibromo-3-chloropropane	ND		5.0
1,2,4-Trichlorobenzene	ND		1.0
Hexachlorobutadiene	ND		1.0
1,2,3-Trichlorobenzene	ND		1.0

Surrogate	Percent Recovery	Control Limits
Dibromofluoromethane	116	71-126
Toluene, d8	99	76-116
4-Bromofluorobenzene	100	70-123

This report pertains to the samples analyzed in accordance with the chain of custody,
and is intended only for the use of the individual or company to whom it is addressed.

Date of Report: April 24, 2007
Samples Submitted: April 12, 2007
Laboratory Reference: 0704-109
Project: 663-010

HALOGENATED VOLATILES by EPA 8260B
Page 1 of 2

Date Extracted: 4-12-07
Date Analyzed: 4-12-07

Matrix: Air
Units: ug/L (ppb)

Lab ID: 04-109-02
Client ID: Air-16I

Compound	Results	Flags	PQL
Dichlorodifluoromethane	ND		1.0
Chloromethane	ND		1.0
Vinyl Chloride	ND		1.0
Bromomethane	ND		1.0
Chloroethane	ND		1.0
Trichlorofluoromethane	ND		1.0
1,1-Dichloroethene	ND		1.0
Iodomethane	ND		5.0
Methylene Chloride	ND		5.0
(trans) 1,2-Dichloroethene	ND		1.0
1,1-Dichloroethane	ND		1.0
2,2-Dichloropropane	ND		1.0
(cis) 1,2-Dichloroethene	ND		1.0
Bromochloromethane	ND		1.0
Chloroform	ND		1.0
1,1,1-Trichloroethane	ND		1.0
Carbon Tetrachloride	ND		1.0
1,1-Dichloropropene	ND		1.0
1,2-Dichloroethane	ND		1.0
Trichloroethene	ND		1.0
1,2-Dichloropropane	ND		1.0
Dibromomethane	ND		1.0
Bromodichloromethane	ND		1.0
2-Chloroethyl Vinyl Ether	ND		5.0
(cis) 1,3-Dichloropropene	ND		1.0
(trans) 1,3-Dichloropropene	ND		1.0

This report pertains to the samples analyzed in accordance with the chain of custody,
and is intended only for the use of the individual or company to whom it is addressed.

Date of Report: April 24, 2007
Samples Submitted: April 12, 2007
Laboratory Reference: 0704-109
Project: 663-010

HALOGENATED VOLATILES by EPA 8260B
Page 2 of 2

Lab ID: 04-109-02
Client ID: Air-16I

Compound	Results	Flags	PQL
1,1,2-Trichloroethane	ND		1.0
Tetrachloroethene	12		1.0
1,3-Dichloropropane	ND		1.0
Dibromochloromethane	ND		1.0
1,2-Dibromoethane	ND		1.0
Chlorobenzene	ND		1.0
1,1,1,2-Tetrachloroethane	ND		1.0
Bromoform	ND		5.0
Bromobenzene	ND		1.0
1,1,2,2-Tetrachloroethane	ND		1.0
1,2,3-Trichloropropane	ND		1.0
2-Chlorotoluene	ND		1.0
4-Chlorotoluene	ND		1.0
1,3-Dichlorobenzene	ND		1.0
1,4-Dichlorobenzene	ND		1.0
1,2-Dichlorobenzene	ND		1.0
1,2-Dibromo-3-chloropropane	ND		5.0
1,2,4-Trichlorobenzene	ND		1.0
Hexachlorobutadiene	ND		1.0
1,2,3-Trichlorobenzene	ND		1.0

Surrogate	Percent Recovery	Control Limits
Dibromofluoromethane	112	71-126
Toluene, d8	99	76-116
4-Bromofluorobenzene	100	70-123

This report pertains to the samples analyzed in accordance with the chain of custody,
and is intended only for the use of the individual or company to whom it is addressed.

Date of Report: April 24, 2007
Samples Submitted: April 12, 2007
Laboratory Reference: 0704-109
Project: 663-010

HALOGENATED VOLATILES by EPA 8260B
Page 1 of 2

Date Extracted: 4-12-07
Date Analyzed: 4-12-07

Matrix: Air
Units: ug/L (ppb)

Lab ID: 04-109-03
Client ID: Air-7s

Compound	Results	Flags	PQL
Dichlorodifluoromethane	ND		1.0
Chloromethane	ND		1.0
Vinyl Chloride	ND		1.0
Bromomethane	ND		1.0
Chloroethane	ND		1.0
Trichlorofluoromethane	ND		1.0
1,1-Dichloroethene	ND		1.0
Iodomethane	ND		5.0
Methylene Chloride	ND		5.0
(trans) 1,2-Dichloroethene	ND		1.0
1,1-Dichloroethane	ND		1.0
2,2-Dichloropropane	ND		1.0
(cis) 1,2-Dichloroethene	ND		1.0
Bromochloromethane	ND		1.0
Chloroform	ND		1.0
1,1,1-Trichloroethane	ND		1.0
Carbon Tetrachloride	ND		1.0
1,1-Dichloropropene	ND		1.0
1,2-Dichloroethane	ND		1.0
Trichloroethene	ND		1.0
1,2-Dichloropropane	ND		1.0
Dibromomethane	ND		1.0
Bromodichloromethane	ND		1.0
2-Chloroethyl Vinyl Ether	ND		5.0
(cis) 1,3-Dichloropropene	ND		1.0
(trans) 1,3-Dichloropropene	ND		1.0

This report pertains to the samples analyzed in accordance with the chain of custody,
and is intended only for the use of the individual or company to whom it is addressed.

Date of Report: April 24, 2007
Samples Submitted: April 12, 2007
Laboratory Reference: 0704-109
Project: 663-010

HALOGENATED VOLATILES by EPA 8260B

Lab ID: 04-109-03
Client ID: Air-7s

Compound	Results	Flags	PQL
1,1,2-Trichloroethane	ND		1.0
Tetrachloroethene	42		1.0
1,3-Dichloropropane	ND		1.0
Dibromochloromethane	ND		1.0
1,2-Dibromoethane	ND		1.0
Chlorobenzene	ND		1.0
1,1,1,2-Tetrachloroethane	ND		1.0
Bromoform	ND		5.0
Bromobenzene	ND		1.0
1,1,2,2-Tetrachloroethane	ND		1.0
1,2,3-Trichloropropane	ND		1.0
2-Chlorotoluene	ND		1.0
4-Chlorotoluene	ND		1.0
1,3-Dichlorobenzene	ND		1.0
1,4-Dichlorobenzene	ND		1.0
1,2-Dichlorobenzene	ND		1.0
1,2-Dibromo-3-chloropropane	ND		5.0
1,2,4-Trichlorobenzene	ND		1.0
Hexachlorobutadiene	ND		1.0
1,2,3-Trichlorobenzene	ND		1.0

Surrogate	Percent Recovery	Control Limits
Dibromofluoromethane	117	71-126
Toluene, d8	99	76-116
4-Bromofluorobenzene	102	70-123

This report pertains to the samples analyzed in accordance with the chain of custody,
and is intended only for the use of the individual or company to whom it is addressed.

Date of Report: April 24, 2007
Samples Submitted: April 12, 2007
Laboratory Reference: 0704-109
Project: 663-010

HALOGENATED VOLATILES by EPA 8260B
Page 1 of 2

Date Extracted: 4-12-07
Date Analyzed: 4-12-07

Matrix: Air
Units: ug/L (ppb)

Lab ID: 04-109-04
Client ID: Air-14s

Compound	Results	Flags	PQL
Dichlorodifluoromethane	ND		1.0
Chloromethane	ND		1.0
Vinyl Chloride	ND		1.0
Bromomethane	ND		1.0
Chloroethane	ND		1.0
Trichlorofluoromethane	ND		1.0
1,1-Dichloroethene	ND		1.0
Iodomethane	ND		5.0
Methylene Chloride	ND		5.0
(trans) 1,2-Dichloroethene	ND		1.0
1,1-Dichloroethane	ND		1.0
2,2-Dichloropropane	ND		1.0
(cis) 1,2-Dichloroethene	ND		1.0
Bromochloromethane	ND		1.0
Chloroform	ND		1.0
1,1,1-Trichloroethane	ND		1.0
Carbon Tetrachloride	ND		1.0
1,1-Dichloropropene	ND		1.0
1,2-Dichloroethane	ND		1.0
Trichloroethene	ND		1.0
1,2-Dichloropropane	ND		1.0
Dibromomethane	ND		1.0
Bromodichloromethane	ND		1.0
2-Chloroethyl Vinyl Ether	ND		5.0
(cis) 1,3-Dichloropropene	ND		1.0
(trans) 1,3-Dichloropropene	ND		1.0

This report pertains to the samples analyzed in accordance with the chain of custody,
and is intended only for the use of the individual or company to whom it is addressed.

Date of Report: April 24, 2007
Samples Submitted: April 12, 2007
Laboratory Reference: 0704-109
Project: 663-010

HALOGENATED VOLATILES by EPA 8260B
Page 2 of 2

Lab ID: 04-109-04
Client ID: Air-14s

Compound	Results	Flags	PQL
1,1,2-Trichloroethane	ND		1.0
Tetrachloroethene	38		1.0
1,3-Dichloropropane	ND		1.0
Dibromochloromethane	ND		1.0
1,2-Dibromoethane	ND		1.0
Chlorobenzene	ND		1.0
1,1,1,2-Tetrachloroethane	ND		1.0
Bromoform	ND		5.0
Bromobenzene	ND		1.0
1,1,2,2-Tetrachloroethane	ND		1.0
1,2,3-Trichloropropane	ND		1.0
2-Chlorotoluene	ND		1.0
4-Chlorotoluene	ND		1.0
1,3-Dichlorobenzene	ND		1.0
1,4-Dichlorobenzene	ND		1.0
1,2-Dichlorobenzene	ND		1.0
1,2-Dibromo-3-chloropropane	ND		5.0
1,2,4-Trichlorobenzene	ND		1.0
Hexachlorobutadiene	ND		1.0
1,2,3-Trichlorobenzene	ND		1.0

Surrogate	Percent Recovery	Control Limits
Dibromofluoromethane	113	71-126
Toluene, d8	98	76-116
4-Bromofluorobenzene	102	70-123

This report pertains to the samples analyzed in accordance with the chain of custody,
and is intended only for the use of the individual or company to whom it is addressed.

Date of Report: April 24, 2007
Samples Submitted: April 12, 2007
Laboratory Reference: 0704-109
Project: 663-010

HALOGENATED VOLATILES by EPA 8260B
Page 1 of 2

Date Extracted: 4-12-07
Date Analyzed: 4-12-07

Matrix: Air
Units: ug/L (ppb)

Lab ID: 04-109-05
Client ID: Air-PreCarbon

Compound	Results	Flags	PQL
Dichlorodifluoromethane	ND		1.0
Chloromethane	ND		1.0
Vinyl Chloride	ND		1.0
Bromomethane	ND		1.0
Chloroethane	ND		1.0
Trichlorofluoromethane	ND		1.0
1,1-Dichloroethene	ND		1.0
Iodomethane	ND		5.0
Methylene Chloride	ND		5.0
(trans) 1,2-Dichloroethene	ND		1.0
1,1-Dichloroethane	ND		1.0
2,2-Dichloropropane	ND		1.0
(cis) 1,2-Dichloroethene	ND		1.0
Bromochloromethane	ND		1.0
Chloroform	ND		1.0
1,1,1-Trichloroethane	ND		1.0
Carbon Tetrachloride	ND		1.0
1,1-Dichloropropene	ND		1.0
1,2-Dichloroethane	ND		1.0
Trichloroethene	ND		1.0
1,2-Dichloropropane	ND		1.0
Dibromomethane	ND		1.0
Bromodichloromethane	ND		1.0
2-Chloroethyl Vinyl Ether	ND		5.0
(cis) 1,3-Dichloropropene	ND		1.0
(trans) 1,3-Dichloropropene	ND		1.0

This report pertains to the samples analyzed in accordance with the chain of custody,
and is intended only for the use of the individual or company to whom it is addressed.

Date of Report: April 24, 2007
Samples Submitted: April 12, 2007
Laboratory Reference: 0704-109
Project: 663-010

HALOGENATED VOLATILES by EPA 8260B

Lab ID: 04-109-05
Client ID: Air-PreCarbon

Compound	Results	Flags	PQL
1,1,2-Trichloroethane	ND		1.0
Tetrachloroethene	40		1.0
1,3-Dichloropropane	ND		1.0
Dibromochloromethane	ND		1.0
1,2-Dibromoethane	ND		1.0
Chlorobenzene	ND		1.0
1,1,1,2-Tetrachloroethane	ND		1.0
Bromoform	ND		5.0
Bromobenzene	ND		1.0
1,1,2,2-Tetrachloroethane	ND		1.0
1,2,3-Trichloropropane	ND		1.0
2-Chlorotoluene	ND		1.0
4-Chlorotoluene	ND		1.0
1,3-Dichlorobenzene	ND		1.0
1,4-Dichlorobenzene	ND		1.0
1,2-Dichlorobenzene	ND		1.0
1,2-Dibromo-3-chloropropane	ND		5.0
1,2,4-Trichlorobenzene	ND		1.0
Hexachlorobutadiene	ND		1.0
1,2,3-Trichlorobenzene	ND		1.0

Surrogate	Percent Recovery	Control Limits
Dibromofluoromethane	105	71-126
Toluene, d8	97	76-116
4-Bromofluorobenzene	116	70-123

This report pertains to the samples analyzed in accordance with the chain of custody,
and is intended only for the use of the individual or company to whom it is addressed.

Date of Report: April 24, 2007
Samples Submitted: April 12, 2007
Laboratory Reference: 0704-109
Project: 663-010

HALOGENATED VOLATILES by EPA 8260B
Page 1 of 2

Date Extracted: 4-12-07
Date Analyzed: 4-12-07

Matrix: Air
Units: ug/L (ppb)

Lab ID: 04-109-06
Client ID: Air-11H

Compound	Results	Flags	PQL
Dichlorodifluoromethane	ND		1.0
Chloromethane	ND		1.0
Vinyl Chloride	ND		1.0
Bromomethane	ND		1.0
Chloroethane	ND		1.0
Trichlorofluoromethane	ND		1.0
1,1-Dichloroethene	ND		1.0
Iodomethane	ND		5.0
Methylene Chloride	ND		5.0
(trans) 1,2-Dichloroethene	ND		1.0
1,1-Dichloroethane	ND		1.0
2,2-Dichloropropane	ND		1.0
(cis) 1,2-Dichloroethene	ND		1.0
Bromochloromethane	ND		1.0
Chloroform	ND		1.0
1,1,1-Trichloroethane	ND		1.0
Carbon Tetrachloride	ND		1.0
1,1-Dichloropropene	ND		1.0
1,2-Dichloroethane	ND		1.0
Trichloroethene	ND		1.0
1,2-Dichloropropane	ND		1.0
Dibromomethane	ND		1.0
Bromodichloromethane	ND		1.0
2-Chloroethyl Vinyl Ether	ND		5.0
(cis) 1,3-Dichloropropene	ND		1.0
(trans) 1,3-Dichloropropene	ND		1.0

This report pertains to the samples analyzed in accordance with the chain of custody,
and is intended only for the use of the individual or company to whom it is addressed.

Date of Report: April 24, 2007
Samples Submitted: April 12, 2007
Laboratory Reference: 0704-109
Project: 663-010

HALOGENATED VOLATILES by EPA 8260B

Lab ID: 04-109-06
Client ID: Air-11H

Compound	Results	Flags	PQL
1,1,2-Trichloroethane	ND		1.0
Tetrachloroethene	59		1.0
1,3-Dichloropropane	ND		1.0
Dibromochloromethane	ND		1.0
1,2-Dibromoethane	ND		1.0
Chlorobenzene	ND		1.0
1,1,1,2-Tetrachloroethane	ND		1.0
Bromoform	ND		5.0
Bromobenzene	ND		1.0
1,1,2,2-Tetrachloroethane	ND		1.0
1,2,3-Trichloropropane	ND		1.0
2-Chlorotoluene	ND		1.0
4-Chlorotoluene	ND		1.0
1,3-Dichlorobenzene	ND		1.0
1,4-Dichlorobenzene	ND		1.0
1,2-Dichlorobenzene	ND		1.0
1,2-Dibromo-3-chloropropane	ND		5.0
1,2,4-Trichlorobenzene	ND		1.0
Hexachlorobutadiene	ND		1.0
1,2,3-Trichlorobenzene	ND		1.0

Surrogate	Percent Recovery	Control Limits
Dibromofluoromethane	110	71-126
Toluene, d8	98	76-116
4-Bromofluorobenzene	115	70-123

This report pertains to the samples analyzed in accordance with the chain of custody,
and is intended only for the use of the individual or company to whom it is addressed.

Date of Report: April 24, 2007
Samples Submitted: April 12, 2007
Laboratory Reference: 0704-109
Project: 663-010

HALOGENATED VOLATILES by EPA 8260B
Page 1 of 2

Date Extracted: 4-12-07
Date Analyzed: 4-12-07

Matrix: Air
Units: ug/L (ppb)

Lab ID: 04-109-07
Client ID: Air-11s

Compound	Results	Flags	PQL
Dichlorodifluoromethane	ND		1.0
Chloromethane	ND		1.0
Vinyl Chloride	ND		1.0
Bromomethane	ND		1.0
Chloroethane	ND		1.0
Trichlorofluoromethane	ND		1.0
1,1-Dichloroethene	ND		1.0
Iodomethane	ND		5.0
Methylene Chloride	ND		5.0
(trans) 1,2-Dichloroethene	ND		1.0
1,1-Dichloroethane	ND		1.0
2,2-Dichloropropane	ND		1.0
(cis) 1,2-Dichloroethene	ND		1.0
Bromochloromethane	ND		1.0
Chloroform	ND		1.0
1,1,1-Trichloroethane	ND		1.0
Carbon Tetrachloride	ND		1.0
1,1-Dichloropropene	ND		1.0
1,2-Dichloroethane	ND		1.0
Trichloroethene	ND		1.0
1,2-Dichloropropane	ND		1.0
Dibromomethane	ND		1.0
Bromodichloromethane	ND		1.0
2-Chloroethyl Vinyl Ether	ND		5.0
(cis) 1,3-Dichloropropene	ND		1.0
(trans) 1,3-Dichloropropene	ND		1.0

This report pertains to the samples analyzed in accordance with the chain of custody,
and is intended only for the use of the individual or company to whom it is addressed.

Date of Report: April 24, 2007
Samples Submitted: April 12, 2007
Laboratory Reference: 0704-109
Project: 663-010

HALOGENATED VOLATILES by EPA 8260B
Page 2 of 2

Lab ID: 04-109-07
Client ID: Air-11s

Compound	Results	Flags	PQL
1,1,2-Trichloroethane	ND		1.0
Tetrachloroethene	190		1.0
1,3-Dichloropropane	ND		1.0
Dibromochloromethane	ND		1.0
1,2-Dibromoethane	ND		1.0
Chlorobenzene	ND		1.0
1,1,1,2-Tetrachloroethane	ND		1.0
Bromoform	ND		5.0
Bromobenzene	ND		1.0
1,1,2,2-Tetrachloroethane	ND		1.0
1,2,3-Trichloropropane	ND		1.0
2-Chlorotoluene	ND		1.0
4-Chlorotoluene	ND		1.0
1,3-Dichlorobenzene	ND		1.0
1,4-Dichlorobenzene	ND		1.0
1,2-Dichlorobenzene	ND		1.0
1,2-Dibromo-3-chloropropane	ND		5.0
1,2,4-Trichlorobenzene	ND		1.0
Hexachlorobutadiene	ND		1.0
1,2,3-Trichlorobenzene	ND		1.0

Surrogate	Percent Recovery	Control Limits
Dibromofluoromethane	110	71-126
Toluene, d8	99	76-116
4-Bromofluorobenzene	113	70-123

This report pertains to the samples analyzed in accordance with the chain of custody,
and is intended only for the use of the individual or company to whom it is addressed.

Date of Report: April 24, 2007
Samples Submitted: April 12, 2007
Laboratory Reference: 0704-109
Project: 663-010

HALOGENATED VOLATILES by EPA 8260B
METHOD BLANK QUALITY CONTROL
Page 1 of 2

Date Extracted: 4-12-07
Date Analyzed: 4-12-07

Matrix: Air
Units: ug/L (ppb)

Lab ID: MB0412A1

Compound	Results	Flags	PQL
Dichlorodifluoromethane	ND		1.0
Chloromethane	ND		1.0
Vinyl Chloride	ND		1.0
Bromomethane	ND		1.0
Chloroethane	ND		1.0
Trichlorofluoromethane	ND		1.0
1,1-Dichloroethene	ND		1.0
Iodomethane	ND		5.0
Methylene Chloride	ND		5.0
(trans) 1,2-Dichloroethene	ND		1.0
1,1-Dichloroethane	ND		1.0
2,2-Dichloropropane	ND		1.0
(cis) 1,2-Dichloroethene	ND		1.0
Bromochloromethane	ND		1.0
Chloroform	ND		1.0
1,1,1-Trichloroethane	ND		1.0
Carbon Tetrachloride	ND		1.0
1,1-Dichloropropene	ND		1.0
1,2-Dichloroethane	ND		1.0
Trichloroethene	ND		1.0
1,2-Dichloropropane	ND		1.0
Dibromomethane	ND		1.0
Bromodichloromethane	ND		1.0
2-Chloroethyl Vinyl Ether	ND		5.0
(cis) 1,3-Dichloropropene	ND		1.0
(trans) 1,3-Dichloropropene	ND		1.0

This report pertains to the samples analyzed in accordance with the chain of custody,
and is intended only for the use of the individual or company to whom it is addressed.

Date of Report: April 24, 2007
Samples Submitted: April 12, 2007
Laboratory Reference: 0704-109
Project: 663-010

HALOGENATED VOLATILES by EPA 8260B
METHOD BLANK QUALITY CONTROL
Page 2 of 2

Lab ID: MB0412A1

Compound	Results	Flags	PQL
1,1,2-Trichloroethane	ND		1.0
Tetrachloroethene	ND		1.0
1,3-Dichloropropane	ND		1.0
Dibromochloromethane	ND		1.0
1,2-Dibromoethane	ND		1.0
Chlorobenzene	ND		1.0
1,1,1,2-Tetrachloroethane	ND		1.0
Bromoform	ND		5.0
Bromobenzene	ND		1.0
1,1,2,2-Tetrachloroethane	ND		1.0
1,2,3-Trichloropropane	ND		1.0
2-Chlorotoluene	ND		1.0
4-Chlorotoluene	ND		1.0
1,3-Dichlorobenzene	ND		1.0
1,4-Dichlorobenzene	ND		1.0
1,2-Dichlorobenzene	ND		1.0
1,2-Dibromo-3-chloropropane	ND		5.0
1,2,4-Trichlorobenzene	ND		1.0
Hexachlorobutadiene	ND		1.0
1,2,3-Trichlorobenzene	ND		1.0

Surrogate	Percent Recovery	Control Limits
Dibromofluoromethane	107	71-126
Toluene, d8	98	76-116
4-Bromofluorobenzene	98	70-123

This report pertains to the samples analyzed in accordance with the chain of custody,
and is intended only for the use of the individual or company to whom it is addressed.

Date of Report: April 24, 2007
Samples Submitted: April 12, 2007
Laboratory Reference: 0704-109
Project: 663-010

HALOGENATED VOLATILES by EPA 8260B
DUPLICATE QUALITY CONTROL
Page 1 of 2

Date Extracted: 4-12-07
Date Analyzed: 4-12-07

Matrix: Air
Units: ug/L (ppb)

Lab ID: 04-098-02

Compound	Sample	Duplicate	Flags	RPD
Dichlorodifluoromethane	ND	ND		NA
Chloromethane	ND	ND		NA
Vinyl Chloride	ND	ND		NA
Bromomethane	ND	ND		NA
Chloroethane	ND	ND		NA
Trichlorofluoromethane	ND	ND		NA
1,1-Dichloroethene	ND	ND		NA
Iodomethane	ND	ND		NA
Methylene Chloride	ND	ND		NA
(trans) 1,2-Dichloroethene	ND	ND		NA
1,1-Dichloroethane	ND	ND		NA
2,2-Dichloropropane	ND	ND		NA
(cis) 1,2-Dichloroethene	ND	ND		NA
Bromochloromethane	ND	ND		NA
Chloroform	ND	ND		NA
1,1,1-Trichloroethane	ND	ND		NA
Carbon Tetrachloride	ND	ND		NA
1,1-Dichloropropene	ND	ND		NA
1,2-Dichloroethane	ND	ND		NA
Trichloroethene	ND	ND		NA
1,2-Dichloropropane	ND	ND		NA
Dibromomethane	ND	ND		NA
Bromodichloromethane	ND	ND		NA
2-Chloroethyl Vinyl Ether	ND	ND		NA
(cis) 1,3-Dichloropropene	ND	ND		NA
(trans) 1,3-Dichloropropene	ND	ND		NA

This report pertains to the samples analyzed in accordance with the chain of custody,
and is intended only for the use of the individual or company to whom it is addressed.

Date of Report: April 24, 2007
Samples Submitted: April 12, 2007
Laboratory Reference: 0704-109
Project: 663-010

HALOGENATED VOLATILES by EPA 8260B
DUPLICATE QUALITY CONTROL
Page 2 of 2

Lab ID: 04-098-02

Compound	Sample	Duplicate	Flags	RPD
1,1,2-Trichloroethane	ND	ND		NA
Tetrachloroethene	1.0	ND		NA
1,3-Dichloropropane	ND	ND		NA
Dibromochloromethane	ND	ND		NA
1,2-Dibromoethane	ND	ND		NA
Chlorobenzene	ND	ND		NA
1,1,1,2-Tetrachloroethane	ND	ND		NA
Bromoform	ND	ND		NA
Bromobenzene	ND	ND		NA
1,1,2,2-Tetrachloroethane	ND	ND		NA
1,2,3-Trichloropropane	ND	ND		NA
2-Chlorotoluene	ND	ND		NA
4-Chlorotoluene	ND	ND		NA
1,3-Dichlorobenzene	ND	ND		NA
1,4-Dichlorobenzene	ND	ND		NA
1,2-Dichlorobenzene	ND	ND		NA
1,2-Dibromo-3-chloropropane	ND	ND		NA
1,2,4-Trichlorobenzene	ND	ND		NA
Hexachlorobutadiene	ND	ND		NA
1,2,3-Trichlorobenzene	ND	ND		NA

Surrogate	Percent Recovery	Percent Recovery	Control Limits
Dibromofluoromethane	114	116	71-126
Toluene, d8	99	99	76-116
4-Bromofluorobenzene	101	100	70-123

This report pertains to the samples analyzed in accordance with the chain of custody,
and is intended only for the use of the individual or company to whom it is addressed.

OnSite Environmental Inc.

Data Qualifiers and Abbreviations

A - Due to a high sample concentration, the amount spiked is insufficient for meaningful MS/MSD recovery data.

B - The analyte indicated was also found in the blank sample.

C - The duplicate RPD is outside control limits due to high result variability when analyte concentrations are within five times the quantitation limit.

E - The value reported exceeds the quantitation range and is an estimate.

F - Surrogate recovery data is not available due to the high concentration of coeluting target compounds.

G - Insufficient sample quantity for duplicate analysis.

H - The analyte indicated is a common laboratory solvent and may have been introduced during sample preparation, and be impacting the sample result.

I - Compound recovery is outside of the control limits.

J - The value reported was below the practical quantitation limit. The value is an estimate.

K - Sample duplicate RPD is outside control limits due to sample inhomogeneity. The sample was re-extracted and re-analyzed with similar results.

L - The RPD is outside of the control limits.

M - Hydrocarbons in the gasoline range (toluene-napthalene) are present in the sample.

O - Hydrocarbons indicative of diesel fuel are present in the sample and are impacting the gasoline result.

P - The RPD of the detected concentrations between the two columns is greater than 40.

Q - Surrogate recovery is outside of the control limits.

S - Surrogate recovery data is not available due to the necessary dilution of the sample.

T - The sample chromatogram is not similar to a typical _____.

U - The analyte was analyzed for, but was not detected above the reported sample quantitation limit.

V - Matrix Spike/Matrix Spike Duplicate recoveries are outside control limits due to matrix effects.

W - Matrix Spike/Matrix Spike Duplicate RPD are outside control limits due to matrix effects.

X - Sample extract treated with a silica gel cleanup procedure.

Y - Sample extract treated with an acid/silica gel cleanup procedure.

Z -

ND - Not Detected at PQL
PQL - Practical Quantitation Limit
RPD - Relative Percent Difference

This report pertains to the samples analyzed in accordance with the chain of custody, and is intended only for the use of the individual or company to whom it is addressed.

Chain of Custody

OnSite Environmental Inc.
14648 NE 95th Street • Redmond, WA 98052
Phone: (425) 883-3881 • Fax: (425) 885-4603

Company: Farallon Consulting
Project Number: 663-010
Project Name: Allison's Norge Village
Project Manager: C. Brock
Sampled by: F. Reider

Turnaround Request (in working days)

(Check One)

- ☐ Same Day
- ☐ 1 Day
- ☐ 2 Day
- ☐ 3 Day
- ☒ Standard (7 working days) (TPH analysis 5 working days)
- ☐ _____ (other)

Laboratory Number: 04-109

Requested Analysis

Lab ID	Sample Identification	Date Sampled	Time Sampled	Matrix	# of Cont.	NWTPH-HCID	NWTPH-Gx/BTEX	NWTPH-Dx	Volatiles by 8260B	Halogenated Volatiles by 8260B	Semivolatiles by 8270C	PAHs by 8270C / SIM	PCBs by 8082	Pesticides by 8081A	Herbicides by 8151A	Total RCRA Metals (8)	TCLP Metals	HEM by 1664	VPH	EPH	% Moisture
1	Air-Carbon	4/11/07	1530	A	1					X											
2	Air-16I		1534							X											
3	Air-7S		1539							X											
4	Air-14S		1543							X											
5	Air-PreCarbon		1549							X											
6	Air-11H		1554							X											
7	Air-11S		1602							X											

FR

	Signature	Company	Date	Time
Relinquished by		Farallon	4/12/07	0730
Received by		OnSite	4-12-07	1145
Relinquished by				
Received by				
Relinquished by				
Received by				
Reviewed by/Date		Reviewed by/Date		

Comments/Special Instructions:

Chromatograms with final report ☐

DISTRIBUTION LEGEND: White - OnSite Copy Yellow - Report Copy Pink - Client Copy

OnSite Environmental Inc.
14648 NE 95th Street, Redmond, WA 98052 • (425) 883-3881

April 10, 2007

Carla Brock
Farallon Consulting, LLC
975 5th Avenue NW
Issaquah, WA 98027

Re: Analytical Data for Project 663-010
Laboratory Reference No. 0704-048

Dear Carla:

Enclosed are the analytical results and associated quality control data for samples submitted on April 6, 2007.

The standard policy of OnSite Environmental Inc. is to store your samples for 30 days from the date of receipt. If you require longer storage, please contact the laboratory.

We appreciate the opportunity to be of service to you on this project. If you have any questions concerning the data, or need additional information, please feel free to call me.

Sincerely,

David Baumeister
Project Manager

Enclosures

This report pertains to the samples analyzed in accordance with the chain of custody, and is intended only for the use of the individual or company to whom it is addressed.

Date of Report: April 10, 2007
Samples Submitted: April 6, 2007
Laboratory Reference: 0704-048
Project: 663-010

Case Narrative

Samples were collected on April 5, 2007 and received by the laboratory on April 6, 2007. They were maintained at the laboratory at a temperature of 2°C to 6°C except as noted below.

General QA/QC issues associated with the analytical data enclosed in this laboratory report will be indicated with a reference to a comment or explanation on the Data Qualifier page. More complex and involved QA/QC issues will be discussed in detail below.

This report pertains to the samples analyzed in accordance with the chain of custody, and is intended only for the use of the individual or company to whom it is addressed.

Date of Report: April 10, 2007
Samples Submitted: April 6, 2007
Laboratory Reference: 0704-048
Project: 663-010

HALOGENATED VOLATILES by EPA 8260B
Page 1 of 2

Date Extracted: 4-6-07
Date Analyzed: 4-6-07

Matrix: Air
Units: ug/L (ppb)

Lab ID: 04-048-01
Client ID: Air-3I

Compound	Results	Flags	PQL
Dichlorodifluoromethane	ND		1.0
Chloromethane	ND		1.0
Vinyl Chloride	ND		1.0
Bromomethane	ND		1.0
Chloroethane	ND		1.0
Trichlorofluoromethane	ND		1.0
1,1-Dichloroethene	ND		1.0
Iodomethane	ND		5.0
Methylene Chloride	ND		5.0
(trans) 1,2-Dichloroethene	ND		1.0
1,1-Dichloroethane	ND		1.0
2,2-Dichloropropane	ND		1.0
(cis) 1,2-Dichloroethene	ND		1.0
Bromochloromethane	ND		1.0
Chloroform	ND		1.0
1,1,1-Trichloroethane	ND		1.0
Carbon Tetrachloride	ND		1.0
1,1-Dichloropropene	ND		1.0
1,2-Dichloroethane	ND		1.0
Trichloroethene	ND		1.0
1,2-Dichloropropane	ND		1.0
Dibromomethane	ND		1.0
Bromodichloromethane	ND		1.0
2-Chloroethyl Vinyl Ether	ND		5.0
(cis) 1,3-Dichloropropene	ND		1.0
(trans) 1,3-Dichloropropene	ND		1.0

This report pertains to the samples analyzed in accordance with the chain of custody,
and is intended only for the use of the individual or company to whom it is addressed.

Date of Report: April 10, 2007
Samples Submitted: April 6, 2007
Laboratory Reference: 0704-048
Project: 663-010

HALOGENATED VOLATILES by EPA 8260B
Page 2 of 2

Lab ID: 04-048-01
Client ID: Air-3I

Compound	Results	Flags	PQL
1,1,2-Trichloroethane	ND		1.0
Tetrachloroethene	190		1.0
1,3-Dichloropropane	ND		1.0
Dibromochloromethane	ND		1.0
1,2-Dibromoethane	ND		1.0
Chlorobenzene	ND		1.0
1,1,1,2-Tetrachloroethane	ND		1.0
Bromoform	ND		5.0
Bromobenzene	ND		1.0
1,1,2,2-Tetrachloroethane	ND		1.0
1,2,3-Trichloropropane	ND		1.0
2-Chlorotoluene	ND		1.0
4-Chlorotoluene	ND		1.0
1,3-Dichlorobenzene	ND		1.0
1,4-Dichlorobenzene	ND		1.0
1,2-Dichlorobenzene	ND		1.0
1,2-Dibromo-3-chloropropane	ND		5.0
1,2,4-Trichlorobenzene	ND		1.0
Hexachlorobutadiene	ND		1.0
1,2,3-Trichlorobenzene	ND		1.0

Surrogate	Percent Recovery	Control Limits
Dibromofluoromethane	108	71-126
Toluene, d8	95	76-116
4-Bromofluorobenzene	111	70-123

This report pertains to the samples analyzed in accordance with the chain of custody,
and is intended only for the use of the individual or company to whom it is addressed.

Date of Report: April 10, 2007
Samples Submitted: April 6, 2007
Laboratory Reference: 0704-048
Project: 663-010

HALOGENATED VOLATILES by EPA 8260B
Page 1 of 2

Date Extracted: 4-6-07
Date Analyzed: 4-6-07

Matrix: Air
Units: ug/L (ppb)

Lab ID: 04-048-02
Client ID: Air-7S

Compound	Results	Flags	PQL
Dichlorodifluoromethane	ND		1.0
Chloromethane	ND		1.0
Vinyl Chloride	ND		1.0
Bromomethane	ND		1.0
Chloroethane	ND		1.0
Trichlorofluoromethane	ND		1.0
1,1-Dichloroethene	ND		1.0
Iodomethane	ND		5.0
Methylene Chloride	ND		5.0
(trans) 1,2-Dichloroethene	ND		1.0
1,1-Dichloroethane	ND		1.0
2,2-Dichloropropane	ND		1.0
(cis) 1,2-Dichloroethene	ND		1.0
Bromochloromethane	ND		1.0
Chloroform	ND		1.0
1,1,1-Trichloroethane	ND		1.0
Carbon Tetrachloride	ND		1.0
1,1-Dichloropropene	ND		1.0
1,2-Dichloroethane	ND		1.0
Trichloroethene	ND		1.0
1,2-Dichloropropane	ND		1.0
Dibromomethane	ND		1.0
Bromodichloromethane	ND		1.0
2-Chloroethyl Vinyl Ether	ND		5.0
(cis) 1,3-Dichloropropene	ND		1.0
(trans) 1,3-Dichloropropene	ND		1.0

This report pertains to the samples analyzed in accordance with the chain of custody,
and is intended only for the use of the individual or company to whom it is addressed.

Date of Report: April 10, 2007
Samples Submitted: April 6, 2007
Laboratory Reference: 0704-048
Project: 663-010

HALOGENATED VOLATILES by EPA 8260B
Page 2 of 2

Lab ID: 04-048-02
Client ID: Air-7S

Compound	Results	Flags	PQL
1,1,2-Trichloroethane	ND		1.0
Tetrachloroethene	380	E	1.0
1,3-Dichloropropane	ND		1.0
Dibromochloromethane	ND		1.0
1,2-Dibromoethane	ND		1.0
Chlorobenzene	ND		1.0
1,1,1,2-Tetrachloroethane	ND		1.0
Bromoform	ND		5.0
Bromobenzene	ND		1.0
1,1,2,2-Tetrachloroethane	ND		1.0
1,2,3-Trichloropropane	ND		1.0
2-Chlorotoluene	ND		1.0
4-Chlorotoluene	ND		1.0
1,3-Dichlorobenzene	ND		1.0
1,4-Dichlorobenzene	ND		1.0
1,2-Dichlorobenzene	ND		1.0
1,2-Dibromo-3-chloropropane	ND		5.0
1,2,4-Trichlorobenzene	ND		1.0
Hexachlorobutadiene	ND		1.0
1,2,3-Trichlorobenzene	ND		1.0

Surrogate	Percent Recovery	Control Limits
Dibromofluoromethane	109	71-126
Toluene, d8	94	76-116
4-Bromofluorobenzene	108	70-123

This report pertains to the samples analyzed in accordance with the chain of custody,
and is intended only for the use of the individual or company to whom it is addressed.

Date of Report: April 10, 2007
Samples Submitted: April 6, 2007
Laboratory Reference: 0704-048
Project: 663-010

HALOGENATED VOLATILES by EPA 8260B
Page 1 of 2

Date Extracted: 4-6-07
Date Analyzed: 4-6-07

Matrix: Air
Units: ug/L (ppb)

Lab ID: 04-048-03
Client ID: Air-11S

Compound	Results	Flags	PQL
Dichlorodifluoromethane	ND		1.0
Chloromethane	ND		1.0
Vinyl Chloride	ND		1.0
Bromomethane	ND		1.0
Chloroethane	ND		1.0
Trichlorofluoromethane	ND		1.0
1,1-Dichloroethene	ND		1.0
Iodomethane	ND		5.0
Methylene Chloride	ND		5.0
(trans) 1,2-Dichloroethene	ND		1.0
1,1-Dichloroethane	ND		1.0
2,2-Dichloropropane	ND		1.0
(cis) 1,2-Dichloroethene	ND		1.0
Bromochloromethane	ND		1.0
Chloroform	ND		1.0
1,1,1-Trichloroethane	ND		1.0
Carbon Tetrachloride	ND		1.0
1,1-Dichloropropene	ND		1.0
1,2-Dichloroethane	ND		1.0
Trichloroethene	ND		1.0
1,2-Dichloropropane	ND		1.0
Dibromomethane	ND		1.0
Bromodichloromethane	ND		1.0
2-Chloroethyl Vinyl Ether	ND		5.0
(cis) 1,3-Dichloropropene	ND		1.0
(trans) 1,3-Dichloropropene	ND		1.0

This report pertains to the samples analyzed in accordance with the chain of custody,
and is intended only for the use of the individual or company to whom it is addressed.

Date of Report: April 10, 2007
Samples Submitted: April 6, 2007
Laboratory Reference: 0704-048
Project: 663-010

HALOGENATED VOLATILES by EPA 8260B
Page 2 of 2

Lab ID: 04-048-03
Client ID: Air-11S

Compound	Results	Flags	PQL
1,1,2-Trichloroethane	ND		1.0
Tetrachloroethene	700	E	1.0
1,3-Dichloropropane	ND		1.0
Dibromochloromethane	ND		1.0
1,2-Dibromoethane	ND		1.0
Chlorobenzene	ND		1.0
1,1,1,2-Tetrachloroethane	ND		1.0
Bromoform	ND		5.0
Bromobenzene	ND		1.0
1,1,2,2-Tetrachloroethane	ND		1.0
1,2,3-Trichloropropane	ND		1.0
2-Chlorotoluene	ND		1.0
4-Chlorotoluene	ND		1.0
1,3-Dichlorobenzene	ND		1.0
1,4-Dichlorobenzene	ND		1.0
1,2-Dichlorobenzene	ND		1.0
1,2-Dibromo-3-chloropropane	ND		5.0
1,2,4-Trichlorobenzene	ND		1.0
Hexachlorobutadiene	ND		1.0
1,2,3-Trichlorobenzene	ND		1.0

Surrogate	Percent Recovery	Control Limits
Dibromofluoromethane	112	71-126
Toluene, d8	99	76-116
4-Bromofluorobenzene	106	70-123

This report pertains to the samples analyzed in accordance with the chain of custody,
and is intended only for the use of the individual or company to whom it is addressed.

Date of Report: April 10, 2007
Samples Submitted: April 6, 2007
Laboratory Reference: 0704-048
Project: 663-010

HALOGENATED VOLATILES by EPA 8260B
Page 1 of 2

Date Extracted: 4-6-07
Date Analyzed: 4-6-07

Matrix: Air
Units: ug/L (ppb)

Lab ID: 04-048-04
Client ID: Air-12S

Compound	Results	Flags	PQL
Dichlorodifluoromethane	ND		1.0
Chloromethane	ND		1.0
Vinyl Chloride	ND		1.0
Bromomethane	ND		1.0
Chloroethane	ND		1.0
Trichlorofluoromethane	ND		1.0
1,1-Dichloroethene	ND		1.0
Iodomethane	ND		5.0
Methylene Chloride	ND		5.0
(trans) 1,2-Dichloroethene	ND		1.0
1,1-Dichloroethane	ND		1.0
2,2-Dichloropropane	ND		1.0
(cis) 1,2-Dichloroethene	ND		1.0
Bromochloromethane	ND		1.0
Chloroform	ND		1.0
1,1,1-Trichloroethane	ND		1.0
Carbon Tetrachloride	ND		1.0
1,1-Dichloropropene	ND		1.0
1,2-Dichloroethane	ND		1.0
Trichloroethene	ND		1.0
1,2-Dichloropropane	ND		1.0
Dibromomethane	ND		1.0
Bromodichloromethane	ND		1.0
2-Chloroethyl Vinyl Ether	ND		5.0
(cis) 1,3-Dichloropropene	ND		1.0
(trans) 1,3-Dichloropropene	ND		1.0

This report pertains to the samples analyzed in accordance with the chain of custody,
and is intended only for the use of the individual or company to whom it is addressed.

Date of Report: April 10, 2007
Samples Submitted: April 6, 2007
Laboratory Reference: 0704-048
Project: 663-010

HALOGENATED VOLATILES by EPA 8260B
Page 2 of 2

Lab ID: 04-048-04
Client ID: Air-12S

Compound	Results	Flags	PQL
1,1,2-Trichloroethane	ND		1.0
Tetrachloroethene	190		1.0
1,3-Dichloropropane	ND		1.0
Dibromochloromethane	ND		1.0
1,2-Dibromoethane	ND		1.0
Chlorobenzene	ND		1.0
1,1,1,2-Tetrachloroethane	ND		1.0
Bromoform	ND		5.0
Bromobenzene	ND		1.0
1,1,2,2-Tetrachloroethane	ND		1.0
1,2,3-Trichloropropane	ND		1.0
2-Chlorotoluene	ND		1.0
4-Chlorotoluene	ND		1.0
1,3-Dichlorobenzene	ND		1.0
1,4-Dichlorobenzene	ND		1.0
1,2-Dichlorobenzene	ND		1.0
1,2-Dibromo-3-chloropropane	ND		5.0
1,2,4-Trichlorobenzene	ND		1.0
Hexachlorobutadiene	ND		1.0
1,2,3-Trichlorobenzene	ND		1.0

Surrogate	Percent Recovery	Control Limits
Dibromofluoromethane	109	71-126
Toluene, d8	99	76-116
4-Bromofluorobenzene	101	70-123

This report pertains to the samples analyzed in accordance with the chain of custody,
and is intended only for the use of the individual or company to whom it is addressed.

Date of Report: April 10, 2007
Samples Submitted: April 6, 2007
Laboratory Reference: 0704-048
Project: 663-010

HALOGENATED VOLATILES by EPA 8260B
Page 1 of 2

Date Extracted: 4-6-07
Date Analyzed: 4-6-07

Matrix: Air
Units: ug/L (ppb)

Lab ID: 04-048-05
Client ID: Air-16I

Compound	Results	Flags	PQL
Dichlorodifluoromethane	ND		1.0
Chloromethane	ND		1.0
Vinyl Chloride	ND		1.0
Bromomethane	ND		1.0
Chloroethane	ND		1.0
Trichlorofluoromethane	ND		1.0
1,1-Dichloroethene	ND		1.0
Iodomethane	ND		5.0
Methylene Chloride	ND		5.0
(trans) 1,2-Dichloroethene	ND		1.0
1,1-Dichloroethane	ND		1.0
2,2-Dichloropropane	ND		1.0
(cis) 1,2-Dichloroethene	ND		1.0
Bromochloromethane	ND		1.0
Chloroform	ND		1.0
1,1,1-Trichloroethane	ND		1.0
Carbon Tetrachloride	ND		1.0
1,1-Dichloropropene	ND		1.0
1,2-Dichloroethane	ND		1.0
Trichloroethene	ND		1.0
1,2-Dichloropropane	ND		1.0
Dibromomethane	ND		1.0
Bromodichloromethane	ND		1.0
2-Chloroethyl Vinyl Ether	ND		5.0
(cis) 1,3-Dichloropropene	ND		1.0
(trans) 1,3-Dichloropropene	ND		1.0

This report pertains to the samples analyzed in accordance with the chain of custody,
and is intended only for the use of the individual or company to whom it is addressed.

Date of Report: April 10, 2007
Samples Submitted: April 6, 2007
Laboratory Reference: 0704-048
Project: 663-010

HALOGENATED VOLATILES by EPA 8260B
Page 2 of 2

Lab ID: 04-048-05
Client ID: Air-16I

Compound	Results	Flags	PQL
1,1,2-Trichloroethane	ND		1.0
Tetrachloroethene	100		1.0
1,3-Dichloropropane	ND		1.0
Dibromochloromethane	ND		1.0
1,2-Dibromoethane	ND		1.0
Chlorobenzene	ND		1.0
1,1,1,2-Tetrachloroethane	ND		1.0
Bromoform	ND		5.0
Bromobenzene	ND		1.0
1,1,2,2-Tetrachloroethane	ND		1.0
1,2,3-Trichloropropane	ND		1.0
2-Chlorotoluene	ND		1.0
4-Chlorotoluene	ND		1.0
1,3-Dichlorobenzene	ND		1.0
1,4-Dichlorobenzene	ND		1.0
1,2-Dichlorobenzene	ND		1.0
1,2-Dibromo-3-chloropropane	ND		5.0
1,2,4-Trichlorobenzene	ND		1.0
Hexachlorobutadiene	ND		1.0
1,2,3-Trichlorobenzene	ND		1.0

Surrogate	Percent Recovery	Control Limits
Dibromofluoromethane	114	71-126
Toluene, d8	100	76-116
4-Bromofluorobenzene	100	70-123

This report pertains to the samples analyzed in accordance with the chain of custody,
and is intended only for the use of the individual or company to whom it is addressed.

Date of Report: April 10, 2007
Samples Submitted: April 6, 2007
Laboratory Reference: 0704-048
Project: 663-010

HALOGENATED VOLATILES by EPA 8260B
Page 1 of 2

Date Extracted: 4-6-07
Date Analyzed: 4-6-07

Matrix: Air
Units: ug/L (ppb)

Lab ID: 04-048-06
Client ID: Air-Carbon

Compound	**Results**	**Flags**	**PQL**
Dichlorodifluoromethane	ND		1.0
Chloromethane	ND		1.0
Vinyl Chloride	ND		1.0
Bromomethane	ND		1.0
Chloroethane	ND		1.0
Trichlorofluoromethane	ND		1.0
1,1-Dichloroethene	ND		1.0
Iodomethane	ND		5.0
Methylene Chloride	ND		5.0
(trans) 1,2-Dichloroethene	ND		1.0
1,1-Dichloroethane	ND		1.0
2,2-Dichloropropane	ND		1.0
(cis) 1,2-Dichloroethene	ND		1.0
Bromochloromethane	ND		1.0
Chloroform	ND		1.0
1,1,1-Trichloroethane	ND		1.0
Carbon Tetrachloride	ND		1.0
1,1-Dichloropropene	ND		1.0
1,2-Dichloroethane	ND		1.0
Trichloroethene	ND		1.0
1,2-Dichloropropane	ND		1.0
Dibromomethane	ND		1.0
Bromodichloromethane	ND		1.0
2-Chloroethyl Vinyl Ether	ND		5.0
(cis) 1,3-Dichloropropene	ND		1.0
(trans) 1,3-Dichloropropene	ND		1.0

This report pertains to the samples analyzed in accordance with the chain of custody,
and is intended only for the use of the individual or company to whom it is addressed.

Date of Report: April 10, 2007
Samples Submitted: April 6, 2007
Laboratory Reference: 0704-048
Project: 663-010

HALOGENATED VOLATILES by EPA 8260B
Page 2 of 2

Lab ID: 04-048-06
Client ID: Air-Carbon

Compound	Results	Flags	PQL
1,1,2-Trichloroethane	ND		1.0
Tetrachloroethene	37		1.0
1,3-Dichloropropane	ND		1.0
Dibromochloromethane	ND		1.0
1,2-Dibromoethane	ND		1.0
Chlorobenzene	ND		1.0
1,1,1,2-Tetrachloroethane	ND		1.0
Bromoform	ND		5.0
Bromobenzene	ND		1.0
1,1,2,2-Tetrachloroethane	ND		1.0
1,2,3-Trichloropropane	ND		1.0
2-Chlorotoluene	ND		1.0
4-Chlorotoluene	ND		1.0
1,3-Dichlorobenzene	ND		1.0
1,4-Dichlorobenzene	ND		1.0
1,2-Dichlorobenzene	ND		1.0
1,2-Dibromo-3-chloropropane	ND		5.0
1,2,4-Trichlorobenzene	ND		1.0
Hexachlorobutadiene	ND		1.0
1,2,3-Trichlorobenzene	ND		1.0

Surrogate	Percent Recovery	Control Limits
Dibromofluoromethane	115	71-126
Toluene, d8	100	76-116
4-Bromofluorobenzene	102	70-123

This report pertains to the samples analyzed in accordance with the chain of custody,
and is intended only for the use of the individual or company to whom it is addressed.

Date of Report: April 10, 2007
Samples Submitted: April 6, 2007
Laboratory Reference: 0704-048
Project: 663-010

HALOGENATED VOLATILES by EPA 8260B
METHOD BLANK QUALITY CONTROL
Page 1 of 2

Date Extracted: 4-6-07
Date Analyzed: 4-6-07

Matrix: Air
Units: ug/L (ppb)

Lab ID: MB0406A1

Compound	Results	Flags	PQL
Dichlorodifluoromethane	ND		1.0
Chloromethane	ND		1.0
Vinyl Chloride	ND		1.0
Bromomethane	ND		1.0
Chloroethane	ND		1.0
Trichlorofluoromethane	ND		1.0
1,1-Dichloroethene	ND		1.0
Iodomethane	ND		5.0
Methylene Chloride	ND		5.0
(trans) 1,2-Dichloroethene	ND		1.0
1,1-Dichloroethane	ND		1.0
2,2-Dichloropropane	ND		1.0
(cis) 1,2-Dichloroethene	ND		1.0
Bromochloromethane	ND		1.0
Chloroform	ND		1.0
1,1,1-Trichloroethane	ND		1.0
Carbon Tetrachloride	ND		1.0
1,1-Dichloropropene	ND		1.0
1,2-Dichloroethane	ND		1.0
Trichloroethene	ND		1.0
1,2-Dichloropropane	ND		1.0
Dibromomethane	ND		1.0
Bromodichloromethane	ND		1.0
2-Chloroethyl Vinyl Ether	ND		5.0
(cis) 1,3-Dichloropropene	ND		1.0
(trans) 1,3-Dichloropropene	ND		1.0

This report pertains to the samples analyzed in accordance with the chain of custody,
and is intended only for the use of the individual or company to whom it is addressed.

Date of Report: April 10, 2007
Samples Submitted: April 6, 2007
Laboratory Reference: 0704-048
Project: 663-010

HALOGENATED VOLATILES by EPA 8260B
METHOD BLANK QUALITY CONTROL
Page 2 of 2

Lab ID: MB0406A1

Compound	Results	Flags	PQL
1,1,2-Trichloroethane	ND		1.0
Tetrachloroethene	ND		1.0
1,3-Dichloropropane	ND		1.0
Dibromochloromethane	ND		1.0
1,2-Dibromoethane	ND		1.0
Chlorobenzene	ND		1.0
1,1,1,2-Tetrachloroethane	ND		1.0
Bromoform	ND		5.0
Bromobenzene	ND		1.0
1,1,2,2-Tetrachloroethane	ND		1.0
1,2,3-Trichloropropane	ND		1.0
2-Chlorotoluene	ND		1.0
4-Chlorotoluene	ND		1.0
1,3-Dichlorobenzene	ND		1.0
1,4-Dichlorobenzene	ND		1.0
1,2-Dichlorobenzene	ND		1.0
1,2-Dibromo-3-chloropropane	ND		5.0
1,2,4-Trichlorobenzene	ND		1.0
Hexachlorobutadiene	ND		1.0
1,2,3-Trichlorobenzene	ND		1.0

Surrogate	Percent Recovery	Control Limits
Dibromofluoromethane	108	71-126
Toluene, d8	95	76-116
4-Bromofluorobenzene	110	70-123

This report pertains to the samples analyzed in accordance with the chain of custody,
and is intended only for the use of the individual or company to whom it is addressed.

Date of Report: April 10, 2007
Samples Submitted: April 6, 2007
Laboratory Reference: 0704-048
Project: 663-010

HALOGENATED VOLATILES by EPA 8260B
DUPLICATE QUALITY CONTROL
Page 1 of 2

Date Extracted: 4-6-07
Date Analyzed: 4-6-07

Matrix: Air
Units: ug/L (ppb)

Lab ID: 04-048-06

Compound	Sample	Duplicate	Flags	RPD
Dichlorodifluoromethane	ND	ND		NA
Chloromethane	ND	ND		NA
Vinyl Chloride	ND	ND		NA
Bromomethane	ND	ND		NA
Chloroethane	ND	ND		NA
Trichlorofluoromethane	ND	ND		NA
1,1-Dichloroethene	ND	ND		NA
Iodomethane	ND	ND		NA
Methylene Chloride	ND	ND		NA
(trans) 1,2-Dichloroethene	ND	ND		NA
1,1-Dichloroethane	ND	ND		NA
2,2-Dichloropropane	ND	ND		NA
(cis) 1,2-Dichloroethene	ND	ND		NA
Bromochloromethane	ND	ND		NA
Chloroform	ND	ND		NA
1,1,1-Trichloroethane	ND	ND		NA
Carbon Tetrachloride	ND	ND		NA
1,1-Dichloropropene	ND	ND		NA
1,2-Dichloroethane	ND	ND		NA
Trichloroethene	ND	ND		NA
1,2-Dichloropropane	ND	ND		NA
Dibromomethane	ND	ND		NA
Bromodichloromethane	ND	ND		NA
2-Chloroethyl Vinyl Ether	ND	ND		NA
(cis) 1,3-Dichloropropene	ND	ND		NA
(trans) 1,3-Dichloropropene	ND	ND		NA

This report pertains to the samples analyzed in accordance with the chain of custody,
and is intended only for the use of the individual or company to whom it is addressed.

Date of Report: April 10, 2007
Samples Submitted: April 6, 2007
Laboratory Reference: 0704-048
Project: 663-010

HALOGENATED VOLATILES by EPA 8260B
DUPLICATE QUALITY CONTROL
Page 2 of 2

Lab ID: 04-048-06

Compound	Sample	Duplicate	Flags	RPD
1,1,2-Trichloroethane	ND	ND		NA
Tetrachloroethene	37	29		24
1,3-Dichloropropane	ND	ND		NA
Dibromochloromethane	ND	ND		NA
1,2-Dibromoethane	ND	ND		NA
Chlorobenzene	ND	ND		NA
1,1,1,2-Tetrachloroethane	ND	ND		NA
Bromoform	ND	ND		NA
Bromobenzene	ND	ND		NA
1,1,2,2-Tetrachloroethane	ND	ND		NA
1,2,3-Trichloropropane	ND	ND		NA
2-Chlorotoluene	ND	ND		NA
4-Chlorotoluene	ND	ND		NA
1,3-Dichlorobenzene	ND	ND		NA
1,4-Dichlorobenzene	ND	ND		NA
1,2-Dichlorobenzene	ND	ND		NA
1,2-Dibromo-3-chloropropane	ND	ND		NA
1,2,4-Trichlorobenzene	ND	ND		NA
Hexachlorobutadiene	ND	ND		NA
1,2,3-Trichlorobenzene	ND	ND		NA

Surrogate	Percent Recovery	Percent Recovery	Control Limits
Dibromofluoromethane	115	113	71-126
Toluene, d8	100	101	76-116
4-Bromofluorobenzene	102	101	70-123

This report pertains to the samples analyzed in accordance with the chain of custody,
and is intended only for the use of the individual or company to whom it is addressed.

OnSite Environmental Inc.

Data Qualifiers and Abbreviations

A - Due to a high sample concentration, the amount spiked is insufficient for meaningful MS/MSD recovery data.

B - The analyte indicated was also found in the blank sample.

C - The duplicate RPD is outside control limits due to high result variability when analyte concentrations are within five times the quantitation limit.

E - The value reported exceeds the quantitation range and is an estimate.

F - Surrogate recovery data is not available due to the high concentration of coeluting target compounds.

G - Insufficient sample quantity for duplicate analysis.

H - The analyte indicated is a common laboratory solvent and may have been introduced during sample preparation, and be impacting the sample result.

I - Compound recovery is outside of the control limits.

J - The value reported was below the practical quantitation limit. The value is an estimate.

K - Sample duplicate RPD is outside control limits due to sample inhomogeneity. The sample was re-extracted and re-analyzed with similar results.

L - The RPD is outside of the control limits.

M - Hydrocarbons in the gasoline range (toluene-napthalene) are present in the sample.

O - Hydrocarbons indicative of diesel fuel are present in the sample and are impacting the gasoline result.

P - The RPD of the detected concentrations between the two columns is greater than 40.

Q - Surrogate recovery is outside of the control limits.

S - Surrogate recovery data is not available due to the necessary dilution of the sample.

T - The sample chromatogram is not similar to a typical _____.

U - The analyte was analyzed for, but was not detected above the reported sample quantitation limit.

V - Matrix Spike/Matrix Spike Duplicate recoveries are outside control limits due to matrix effects.

W - Matrix Spike/Matrix Spike Duplicate RPD are outside control limits due to matrix effects.

X - Sample extract treated with a silica gel cleanup procedure.

Y - Sample extract treated with an acid/silica gel cleanup procedure.

Z -

ND - Not Detected at PQL
PQL - Practical Quantitation Limit
RPD - Relative Percent Difference

This report pertains to the samples analyzed in accordance with the chain of custody, and is intended only for the use of the individual or company to whom it is addressed.

Chain of Custody

OnSite Environmental Inc.
14648 NE 95th Street • Redmond, WA 98052
Phone: (425) 883-3881 • Fax: (425) 885-4603

Company: Farallon Consulting
Project Number: 663-010
Project Name: Allison's Large Village
Project Manager: C. Brock
Sampled by: F. Reider

Turnaround Request (in working days)

(Check One)

- ☐ Same Day
- ☐ 1 Day
- ☐ 2 Day
- ☐ 3 Day
- ☒ Standard (7 working days) (TPH analysis 5 working days)
- ☐ _____ (other)

Laboratory Number: 04-048

Requested Analysis

Lab ID	Sample Identification	Date Sampled	Time Sampled	Matrix	# of Cont.	NWTPH-HCID	NWTPH-Gx/BTEX	NWTPH-Dx	Volatiles by 8260B	Halogenated Volatiles by 8260B	Semivolatiles by 8270C	PAHs by 8270C / SIM	PCBs by 8082	Pesticides by 8081A	Herbicides by 8151A	Total RCRA Metals (8)	TCLP Metals	HEM by 1664	VPH	EPH	% Moisture
1	Air-3I	4/5/07	1710	A	1					X											
2	Air-7S		1712							X											
3	Air-11S		1715							X											
4	Air-12S		1717							X											
5	Air-16I		1720							X											
6	Air-Carbon		1725							X											

	Signature	Company	Date	Time
Relinquished by		Farallon	4/6/07	0745
Received by		OSE	4.6.07	7:45A
Relinquished by				
Received by				
Relinquished by				
Received by				
Reviewed by/Date		Reviewed by/Date		

Comments/Special Instructions: Chlorinated VOC's

Chromatograms with final report ☐

DISTRIBUTION LEGEND: White - OnSite Copy Yellow - Report Copy Pink - Client Copy

OnSite Environmental Inc.
14648 NE 95th Street, Redmond, WA 98052 • (425) 883-3881

July 19, 2007

Carla Brock
Farallon Consulting, LLC
975 5th Avenue NW
Issaquah, WA 98027

Re: Analytical Data for Project 663-010
Laboratory Reference No. 0707-075

Dear Carla:

Enclosed are the analytical results and associated quality control data for samples submitted on July 11, 2007.

The standard policy of OnSite Environmental Inc. is to store your samples for 30 days from the date of receipt. If you require longer storage, please contact the laboratory.

We appreciate the opportunity to be of service to you on this project. If you have any questions concerning the data, or need additional information, please feel free to call me.

Sincerely,

David Baumeister
Project Manager

Enclosures

This report pertains to the samples analyzed in accordance with the chain of custody, and is intended only for the use of the individual or company to whom it is addressed.

Date of Report: July 19, 2007
Samples Submitted: July 11, 2007
Laboratory Reference: 0707-075
Project: 663-010

Case Narrative

Samples were collected on July 10, 2007 and received by the laboratory on July 11, 2007. They were maintained at the laboratory at a temperature of 2°C to 6°C except as noted below.

General QA/QC issues associated with the analytical data enclosed in this laboratory report will be indicated with a reference to a comment or explanation on the Data Qualifier page. More complex and involved QA/QC issues will be discussed in detail below.

This report pertains to the samples analyzed in accordance with the chain of custody, and is intended only for the use of the individual or company to whom it is addressed.

Date of Report: July 19, 2007
Samples Submitted: July 11, 2007
Laboratory Reference: 0707-075
Project: 663-010

HALOGENATED VOLATILES by EPA 8260B
page 1 of 2

Date Extracted: 7-17-07
Date Analyzed: 7-17-07

Matrix: Water
Units: ug/L (ppb)

Lab ID: 07-075-01
Client ID: MW9-071007

Compound	Results	Flags	PQL
Dichlorodifluoromethane	ND		0.20
Chloromethane	ND		0.20
Vinyl Chloride	ND		0.20
Bromomethane	ND		0.20
Chloroethane	ND		0.20
Trichlorofluoromethane	ND		0.20
1,1-Dichloroethene	ND		0.20
Iodomethane	ND		1.0
Methylene Chloride	ND		1.0
(trans) 1,2-Dichloroethene	ND		0.20
1,1-Dichloroethane	ND		0.20
2,2-Dichloropropane	ND		0.20
(cis) 1,2-Dichloroethene	ND		0.20
Bromochloromethane	ND		0.20
Chloroform	ND		0.20
1,1,1-Trichloroethane	ND		0.20
Carbon Tetrachloride	ND		0.20
1,1-Dichloropropene	ND		0.20
1,2-Dichloroethane	ND		0.20
Trichloroethene	ND		0.20
1,2-Dichloropropane	ND		0.20
Dibromomethane	ND		0.20
Bromodichloromethane	ND		0.20
2-Chloroethyl Vinyl Ether	ND		1.0
(cis) 1,3-Dichloropropene	ND		0.20
(trans) 1,3-Dichloropropene	ND		0.20

This report pertains to the samples analyzed in accordance with the chain of custody,
and is intended only for the use of the individual or company to whom it is addressed.

Date of Report: July 19, 2007
Samples Submitted: July 11, 2007
Laboratory Reference: 0707-075
Project: 663-010

HALOGENATED VOLATILES by EPA 8260B
page 2 of 2

Lab ID: 07-075-01
Client ID: MW9-071007

Compound	Results	Flags	PQL
1,1,2-Trichloroethane	ND		0.20
Tetrachloroethene	0.29		0.20
1,3-Dichloropropane	ND		0.20
Dibromochloromethane	ND		0.20
1,2-Dibromoethane	ND		0.20
Chlorobenzene	ND		0.20
1,1,1,2-Tetrachloroethane	ND		0.20
Bromoform	ND		1.0
Bromobenzene	ND		0.20
1,1,2,2-Tetrachloroethane	ND		0.20
1,2,3-Trichloropropane	ND		0.20
2-Chlorotoluene	ND		0.20
4-Chlorotoluene	ND		0.20
1,3-Dichlorobenzene	ND		0.20
1,4-Dichlorobenzene	ND		0.20
1,2-Dichlorobenzene	ND		0.20
1,2-Dibromo-3-chloropropane	ND		1.0
1,2,4-Trichlorobenzene	ND		0.20
Hexachlorobutadiene	ND		0.20
1,2,3-Trichlorobenzene	ND		0.20

Surrogate	Percent Recovery	Control Limits
Dibromofluoromethane	88	71-126
Toluene, d8	92	76-116
4-Bromofluorobenzene	89	70-123

This report pertains to the samples analyzed in accordance with the chain of custody,
and is intended only for the use of the individual or company to whom it is addressed.

Date of Report: July 19, 2007
Samples Submitted: July 11, 2007
Laboratory Reference: 0707-075
Project: 663-010

HALOGENATED VOLATILES by EPA 8260B
page 1 of 2

Date Extracted: 7-17-07
Date Analyzed: 7-17-07

Matrix: Water
Units: ug/L (ppb)

Lab ID: 07-075-02
Client ID: MW10-071007

Compound	Results	Flags	PQL
Dichlorodifluoromethane	ND		0.20
Chloromethane	ND		0.20
Vinyl Chloride	ND		0.20
Bromomethane	ND		0.20
Chloroethane	ND		0.20
Trichlorofluoromethane	ND		0.20
1,1-Dichloroethene	ND		0.20
Iodomethane	ND		1.0
Methylene Chloride	ND		1.0
(trans) 1,2-Dichloroethene	ND		0.20
1,1-Dichloroethane	ND		0.20
2,2-Dichloropropane	ND		0.20
(cis) 1,2-Dichloroethene	ND		0.20
Bromochloromethane	ND		0.20
Chloroform	ND		0.20
1,1,1-Trichloroethane	ND		0.20
Carbon Tetrachloride	ND		0.20
1,1-Dichloropropene	ND		0.20
1,2-Dichloroethane	ND		0.20
Trichloroethene	ND		0.20
1,2-Dichloropropane	ND		0.20
Dibromomethane	ND		0.20
Bromodichloromethane	ND		0.20
2-Chloroethyl Vinyl Ether	ND		1.0
(cis) 1,3-Dichloropropene	ND		0.20
(trans) 1,3-Dichloropropene	ND		0.20

This report pertains to the samples analyzed in accordance with the chain of custody,
and is intended only for the use of the individual or company to whom it is addressed.

Date of Report: July 19, 2007
Samples Submitted: July 11, 2007
Laboratory Reference: 0707-075
Project: 663-010

HALOGENATED VOLATILES by EPA 8260B
page 2 of 2

Lab ID: 07-075-02
Client ID: MW10-071007

Compound	Results	Flags	PQL
1,1,2-Trichloroethane	ND		0.20
Tetrachloroethene	ND		0.20
1,3-Dichloropropane	ND		0.20
Dibromochloromethane	ND		0.20
1,2-Dibromoethane	ND		0.20
Chlorobenzene	ND		0.20
1,1,1,2-Tetrachloroethane	ND		0.20
Bromoform	ND		1.0
Bromobenzene	ND		0.20
1,1,2,2-Tetrachloroethane	ND		0.20
1,2,3-Trichloropropane	ND		0.20
2-Chlorotoluene	ND		0.20
4-Chlorotoluene	ND		0.20
1,3-Dichlorobenzene	ND		0.20
1,4-Dichlorobenzene	ND		0.20
1,2-Dichlorobenzene	ND		0.20
1,2-Dibromo-3-chloropropane	ND		1.0
1,2,4-Trichlorobenzene	ND		0.20
Hexachlorobutadiene	ND		0.20
1,2,3-Trichlorobenzene	ND		0.20

Surrogate	Percent Recovery	Control Limits
Dibromofluoromethane	89	71-126
Toluene, d8	93	76-116
4-Bromofluorobenzene	92	70-123

This report pertains to the samples analyzed in accordance with the chain of custody,
and is intended only for the use of the individual or company to whom it is addressed.

Date of Report: July 19, 2007
Samples Submitted: July 11, 2007
Laboratory Reference: 0707-075
Project: 663-010

HALOGENATED VOLATILES by EPA 8260B
page 1 of 2

Date Extracted: 7-17-07
Date Analyzed: 7-17-07

Matrix: Water
Units: ug/L (ppb)

Lab ID: 07-075-03
Client ID: MW11-071007

Compound	Results	Flags	PQL
Dichlorodifluoromethane	ND		0.20
Chloromethane	ND		0.20
Vinyl Chloride	ND		0.20
Bromomethane	ND		0.20
Chloroethane	ND		0.20
Trichlorofluoromethane	ND		0.20
1,1-Dichloroethene	ND		0.20
Iodomethane	ND		1.0
Methylene Chloride	ND		1.0
(trans) 1,2-Dichloroethene	ND		0.20
1,1-Dichloroethane	ND		0.20
2,2-Dichloropropane	ND		0.20
(cis) 1,2-Dichloroethene	ND		0.20
Bromochloromethane	ND		0.20
Chloroform	ND		0.20
1,1,1-Trichloroethane	ND		0.20
Carbon Tetrachloride	ND		0.20
1,1-Dichloropropene	ND		0.20
1,2-Dichloroethane	ND		0.20
Trichloroethene	ND		0.20
1,2-Dichloropropane	ND		0.20
Dibromomethane	ND		0.20
Bromodichloromethane	ND		0.20
2-Chloroethyl Vinyl Ether	ND		1.0
(cis) 1,3-Dichloropropene	ND		0.20
(trans) 1,3-Dichloropropene	ND		0.20

This report pertains to the samples analyzed in accordance with the chain of custody,
and is intended only for the use of the individual or company to whom it is addressed.

Date of Report: July 19, 2007
Samples Submitted: July 11, 2007
Laboratory Reference: 0707-075
Project: 663-010

HALOGENATED VOLATILES by EPA 8260B
page 2 of 2

Lab ID: 07-075-03
Client ID: MW11-071007

Compound	Results	Flags	PQL
1,1,2-Trichloroethane	ND		0.20
Tetrachloroethene	9.0		0.20
1,3-Dichloropropane	ND		0.20
Dibromochloromethane	ND		0.20
1,2-Dibromoethane	ND		0.20
Chlorobenzene	ND		0.20
1,1,1,2-Tetrachloroethane	ND		0.20
Bromoform	ND		1.0
Bromobenzene	ND		0.20
1,1,2,2-Tetrachloroethane	ND		0.20
1,2,3-Trichloropropane	ND		0.20
2-Chlorotoluene	ND		0.20
4-Chlorotoluene	ND		0.20
1,3-Dichlorobenzene	ND		0.20
1,4-Dichlorobenzene	ND		0.20
1,2-Dichlorobenzene	ND		0.20
1,2-Dibromo-3-chloropropane	ND		1.0
1,2,4-Trichlorobenzene	ND		0.20
Hexachlorobutadiene	ND		0.20
1,2,3-Trichlorobenzene	ND		0.20

Surrogate	Percent Recovery	Control Limits
Dibromofluoromethane	90	71-126
Toluene, d8	94	76-116
4-Bromofluorobenzene	89	70-123

This report pertains to the samples analyzed in accordance with the chain of custody,
and is intended only for the use of the individual or company to whom it is addressed.

Date of Report: July 19, 2007
Samples Submitted: July 11, 2007
Laboratory Reference: 0707-075
Project: 663-010

HALOGENATED VOLATILES by EPA 8260B
page 1 of 2

Date Extracted: 7-17-07
Date Analyzed: 7-17-07

Matrix: Water
Units: ug/L (ppb)

Lab ID: 07-075-04
Client ID: MW7-071007

Compound	Results	Flags	PQL
Dichlorodifluoromethane	ND		0.20
Chloromethane	ND		0.20
Vinyl Chloride	ND		0.20
Bromomethane	ND		0.20
Chloroethane	ND		0.20
Trichlorofluoromethane	ND		0.20
1,1-Dichloroethene	ND		0.20
Iodomethane	ND		1.0
Methylene Chloride	ND		1.0
(trans) 1,2-Dichloroethene	ND		0.20
1,1-Dichloroethane	ND		0.20
2,2-Dichloropropane	ND		0.20
(cis) 1,2-Dichloroethene	ND		0.20
Bromochloromethane	ND		0.20
Chloroform	ND		0.20
1,1,1-Trichloroethane	ND		0.20
Carbon Tetrachloride	ND		0.20
1,1-Dichloropropene	ND		0.20
1,2-Dichloroethane	ND		0.20
Trichloroethene	ND		0.20
1,2-Dichloropropane	ND		0.20
Dibromomethane	ND		0.20
Bromodichloromethane	ND		0.20
2-Chloroethyl Vinyl Ether	ND		1.0
(cis) 1,3-Dichloropropene	ND		0.20
(trans) 1,3-Dichloropropene	ND		0.20

This report pertains to the samples analyzed in accordance with the chain of custody,
and is intended only for the use of the individual or company to whom it is addressed.

Date of Report: July 19, 2007
Samples Submitted: July 11, 2007
Laboratory Reference: 0707-075
Project: 663-010

HALOGENATED VOLATILES by EPA 8260B
page 2 of 2

Lab ID: 07-075-04
Client ID: MW7-071007

Compound	Results	Flags	PQL
1,1,2-Trichloroethane	ND		0.20
Tetrachloroethene	35		0.20
1,3-Dichloropropane	ND		0.20
Dibromochloromethane	ND		0.20
1,2-Dibromoethane	ND		0.20
Chlorobenzene	ND		0.20
1,1,1,2-Tetrachloroethane	ND		0.20
Bromoform	ND		1.0
Bromobenzene	ND		0.20
1,1,2,2-Tetrachloroethane	ND		0.20
1,2,3-Trichloropropane	ND		0.20
2-Chlorotoluene	ND		0.20
4-Chlorotoluene	ND		0.20
1,3-Dichlorobenzene	ND		0.20
1,4-Dichlorobenzene	ND		0.20
1,2-Dichlorobenzene	ND		0.20
1,2-Dibromo-3-chloropropane	ND		1.0
1,2,4-Trichlorobenzene	ND		0.20
Hexachlorobutadiene	ND		0.20
1,2,3-Trichlorobenzene	ND		0.20

Surrogate	Percent Recovery	Control Limits
Dibromofluoromethane	89	71-126
Toluene, d8	94	76-116
4-Bromofluorobenzene	90	70-123

This report pertains to the samples analyzed in accordance with the chain of custody,
and is intended only for the use of the individual or company to whom it is addressed.

Date of Report: July 19, 2007
Samples Submitted: July 11, 2007
Laboratory Reference: 0707-075
Project: 663-010

HALOGENATED VOLATILES by EPA 8260B
page 1 of 2

Date Extracted: 7-17-07
Date Analyzed: 7-17-07

Matrix: Water
Units: ug/L (ppb)

Lab ID: 07-075-05
Client ID: MW2-071007

Compound	Results	Flags	PQL
Dichlorodifluoromethane	ND		4.0
Chloromethane	ND		4.0
Vinyl Chloride	ND		4.0
Bromomethane	ND		4.0
Chloroethane	ND		4.0
Trichlorofluoromethane	ND		4.0
1,1-Dichloroethene	ND		4.0
Iodomethane	ND		20
Methylene Chloride	ND		20
(trans) 1,2-Dichloroethene	ND		4.0
1,1-Dichloroethane	ND		4.0
2,2-Dichloropropane	ND		4.0
(cis) 1,2-Dichloroethene	ND		4.0
Bromochloromethane	ND		4.0
Chloroform	ND		4.0
1,1,1-Trichloroethane	ND		4.0
Carbon Tetrachloride	ND		4.0
1,1-Dichloropropene	ND		4.0
1,2-Dichloroethane	ND		4.0
Trichloroethene	ND		4.0
1,2-Dichloropropane	ND		4.0
Dibromomethane	ND		4.0
Bromodichloromethane	ND		4.0
2-Chloroethyl Vinyl Ether	ND		20
(cis) 1,3-Dichloropropene	ND		4.0
(trans) 1,3-Dichloropropene	ND		4.0

This report pertains to the samples analyzed in accordance with the chain of custody,
and is intended only for the use of the individual or company to whom it is addressed.

Date of Report: July 19, 2007
Samples Submitted: July 11, 2007
Laboratory Reference: 0707-075
Project: 663-010

HALOGENATED VOLATILES by EPA 8260B
page 2 of 2

Lab ID: 07-075-05
Client ID: MW2-071007

Compound	Results	Flags	PQL
1,1,2-Trichloroethane	ND		4.0
Tetrachloroethene	920		4.0
1,3-Dichloropropane	ND		4.0
Dibromochloromethane	ND		4.0
1,2-Dibromoethane	ND		4.0
Chlorobenzene	ND		4.0
1,1,1,2-Tetrachloroethane	ND		4.0
Bromoform	ND		20
Bromobenzene	ND		4.0
1,1,2,2-Tetrachloroethane	ND		4.0
1,2,3-Trichloropropane	ND		4.0
2-Chlorotoluene	ND		4.0
4-Chlorotoluene	ND		4.0
1,3-Dichlorobenzene	ND		4.0
1,4-Dichlorobenzene	ND		4.0
1,2-Dichlorobenzene	ND		4.0
1,2-Dibromo-3-chloropropane	ND		20
1,2,4-Trichlorobenzene	ND		4.0
Hexachlorobutadiene	ND		4.0
1,2,3-Trichlorobenzene	ND		4.0

Surrogate	Percent Recovery	Control Limits
Dibromofluoromethane	89	71-126
Toluene, d8	93	76-116
4-Bromofluorobenzene	90	70-123

This report pertains to the samples analyzed in accordance with the chain of custody,
and is intended only for the use of the individual or company to whom it is addressed.

Date of Report: July 19, 2007
Samples Submitted: July 11, 2007
Laboratory Reference: 0707-075
Project: 663-010

HALOGENATED VOLATILES by EPA 8260B
page 1 of 2

Date Extracted: 7-17-07
Date Analyzed: 7-17-07

Matrix: Water
Units: ug/L (ppb)

Lab ID: 07-075-06
Client ID: MW5-071007

Compound	Results	Flags	PQL
Dichlorodifluoromethane	ND		0.40
Chloromethane	ND		0.40
Vinyl Chloride	ND		0.40
Bromomethane	ND		0.40
Chloroethane	ND		0.40
Trichlorofluoromethane	ND		0.40
1,1-Dichloroethene	ND		0.40
Iodomethane	ND		2.0
Methylene Chloride	ND		2.0
(trans) 1,2-Dichloroethene	ND		0.40
1,1-Dichloroethane	ND		0.40
2,2-Dichloropropane	ND		0.40
(cis) 1,2-Dichloroethene	ND		0.40
Bromochloromethane	ND		0.40
Chloroform	ND		0.40
1,1,1-Trichloroethane	ND		0.40
Carbon Tetrachloride	ND		0.40
1,1-Dichloropropene	ND		0.40
1,2-Dichloroethane	ND		0.40
Trichloroethene	ND		0.40
1,2-Dichloropropane	ND		0.40
Dibromomethane	ND		0.40
Bromodichloromethane	ND		0.40
2-Chloroethyl Vinyl Ether	ND		2.0
(cis) 1,3-Dichloropropene	ND		0.40
(trans) 1,3-Dichloropropene	ND		0.40

This report pertains to the samples analyzed in accordance with the chain of custody,
and is intended only for the use of the individual or company to whom it is addressed.

Date of Report: July 19, 2007
Samples Submitted: July 11, 2007
Laboratory Reference: 0707-075
Project: 663-010

HALOGENATED VOLATILES by EPA 8260B
page 2 of 2

Lab ID: 07-075-06
Client ID: MW5-071007

Compound	Results	Flags	PQL
1,1,2-Trichloroethane	ND		0.40
Tetrachloroethene	53		0.40
1,3-Dichloropropane	ND		0.40
Dibromochloromethane	ND		0.40
1,2-Dibromoethane	ND		0.40
Chlorobenzene	ND		0.40
1,1,1,2-Tetrachloroethane	ND		0.40
Bromoform	ND		2.0
Bromobenzene	ND		0.40
1,1,2,2-Tetrachloroethane	ND		0.40
1,2,3-Trichloropropane	ND		0.40
2-Chlorotoluene	ND		0.40
4-Chlorotoluene	ND		0.40
1,3-Dichlorobenzene	ND		0.40
1,4-Dichlorobenzene	ND		0.40
1,2-Dichlorobenzene	ND		0.40
1,2-Dibromo-3-chloropropane	ND		2.0
1,2,4-Trichlorobenzene	ND		0.40
Hexachlorobutadiene	ND		0.40
1,2,3-Trichlorobenzene	ND		0.40

Surrogate	Percent Recovery	Control Limits
Dibromofluoromethane	91	71-126
Toluene, d8	93	76-116
4-Bromofluorobenzene	89	70-123

This report pertains to the samples analyzed in accordance with the chain of custody,
and is intended only for the use of the individual or company to whom it is addressed.

Date of Report: July 19, 2007
Samples Submitted: July 11, 2007
Laboratory Reference: 0707-075
Project: 663-010

HALOGENATED VOLATILES by EPA 8260B
METHOD BLANK QUALITY CONTROL
page 1 of 2

Date Extracted: 7-17-07
Date Analyzed: 7-17-07

Matrix: Water
Units: ug/L (ppb)

Lab ID: MB0717W1

Compound	Results	Flags	PQL
Dichlorodifluoromethane	ND		0.20
Chloromethane	ND		0.20
Vinyl Chloride	ND		0.20
Bromomethane	ND		0.20
Chloroethane	ND		0.20
Trichlorofluoromethane	ND		0.20
1,1-Dichloroethene	ND		0.20
Iodomethane	ND		1.0
Methylene Chloride	ND		1.0
(trans) 1,2-Dichloroethene	ND		0.20
1,1-Dichloroethane	ND		0.20
2,2-Dichloropropane	ND		0.20
(cis) 1,2-Dichloroethene	ND		0.20
Bromochloromethane	ND		0.20
Chloroform	ND		0.20
1,1,1-Trichloroethane	ND		0.20
Carbon Tetrachloride	ND		0.20
1,1-Dichloropropene	ND		0.20
1,2-Dichloroethane	ND		0.20
Trichloroethene	ND		0.20
1,2-Dichloropropane	ND		0.20
Dibromomethane	ND		0.20
Bromodichloromethane	ND		0.20
2-Chloroethyl Vinyl Ether	ND		1.0
(cis) 1,3-Dichloropropene	ND		0.20
(trans) 1,3-Dichloropropene	ND		0.20

This report pertains to the samples analyzed in accordance with the chain of custody,
and is intended only for the use of the individual or company to whom it is addressed.

Date of Report: July 19, 2007
Samples Submitted: July 11, 2007
Laboratory Reference: 0707-075
Project: 663-010

HALOGENATED VOLATILES by EPA 8260B
METHOD BLANK QUALITY CONTROL
page 2 of 2

Lab ID: MB0717W1

Compound	Results	Flags	PQL
1,1,2-Trichloroethane	ND		0.20
Tetrachloroethene	ND		0.20
1,3-Dichloropropane	ND		0.20
Dibromochloromethane	ND		0.20
1,2-Dibromoethane	ND		0.20
Chlorobenzene	ND		0.20
1,1,1,2-Tetrachloroethane	ND		0.20
Bromoform	ND		1.0
Bromobenzene	ND		0.20
1,1,2,2-Tetrachloroethane	ND		0.20
1,2,3-Trichloropropane	ND		0.20
2-Chlorotoluene	ND		0.20
4-Chlorotoluene	ND		0.20
1,3-Dichlorobenzene	ND		0.20
1,4-Dichlorobenzene	ND		0.20
1,2-Dichlorobenzene	ND		0.20
1,2-Dibromo-3-chloropropane	ND		1.0
1,2,4-Trichlorobenzene	ND		0.20
Hexachlorobutadiene	ND		0.20
1,2,3-Trichlorobenzene	ND		0.20

Surrogate	Percent Recovery	Control Limits
Dibromofluoromethane	86	71-126
Toluene, d8	93	76-116
4-Bromofluorobenzene	90	70-123

This report pertains to the samples analyzed in accordance with the chain of custody,
and is intended only for the use of the individual or company to whom it is addressed.

Date of Report: July 19, 2007
Samples Submitted: July 11, 2007
Laboratory Reference: 0707-075
Project: 663-010

HALOGENATED VOLATILES by EPA 8260B
MS/MSD QUALITY CONTROL

Date Extracted: 7-17-07
Date Analyzed: 7-17-07

Matrix: Water
Units: ug/L (ppb)

Lab ID: 07-106-01

Compound	Sample Amount	Spike Amount	MS	Percent Recovery	MSD	Percent Recovery	Recovery Limits	Flags
1,1-Dichloroethene	ND	10.0	9.48	95	9.48	95	70-130	
Benzene	ND	10.0	9.45	95	9.49	95	79-125	
Trichloroethene	0.748	10.0	9.43	87	9.49	87	70-117	
Toluene	ND	10.0	9.69	97	9.56	96	80-120	
Chlorobenzene	ND	10.0	9.86	99	9.79	98	80-107	

	RPD	RPD Limit	Flags
1,1-Dichloroethene	0	12	
Benzene	0	10	
Trichloroethene	1	13	
Toluene	1	16	
Chlorobenzene	1	8	

This report pertains to the samples analyzed in accordance with the chain of custody,
and is intended only for the use of the individual or company to whom it is addressed.

OnSite Environmental Inc.

Data Qualifiers and Abbreviations

A - Due to a high sample concentration, the amount spiked is insufficient for meaningful MS/MSD recovery data.

B - The analyte indicated was also found in the blank sample.

C - The duplicate RPD is outside control limits due to high result variability when analyte concentrations are within five times the quantitation limit.

E - The value reported exceeds the quantitation range and is an estimate.

F - Surrogate recovery data is not available due to the high concentration of coeluting target compounds.

H - The analyte indicated is a common laboratory solvent and may have been introduced during sample preparation, and be impacting the sample result.

I - Compound recovery is outside of the control limits.

J - The value reported was below the practical quantitation limit. The value is an estimate.

K - Sample duplicate RPD is outside control limits due to sample inhomogeneity. The sample was re-extracted and re-analyzed with similar results.

L - The RPD is outside of the control limits.

M - Hydrocarbons in the gasoline range are impacting the diesel range result.

M1 - Hydrocarbons in the gasoline range (toluene-napthalene) are present in the sample.

N - Hydrocarbons in the lube oil range are impacting the diesel range result.

O - Hydrocarbons indicative of heavier fuels are present in the sample and are impacting the gasoline result.

P - The RPD of the detected concentrations between the two columns is greater than 40.

Q - Surrogate recovery is outside of the control limits.

S - Surrogate recovery data is not available due to the necessary dilution of the sample.

T - The sample chromatogram is not similar to a typical _____.

U - The analyte was analyzed for, but was not detected above the reported sample quantitation limit.

U1 - The practical quantitation limit is elevated due to interferences present in the sample.

V - Matrix Spike/Matrix Spike Duplicate recoveries are outside control limits due to matrix effects.

W - Matrix Spike/Matrix Spike Duplicate RPD are outside control limits due to matrix effects.

X - Sample extract treated with a mercury cleanup procedure.

Y - Sample extract treated with an acid/silica gel cleanup procedure.

Z -

ND - Not Detected at PQL
PQL - Practical Quantitation Limit
RPD - Relative Percent Difference

This report pertains to the samples analyzed in accordance with the chain of custody, and is intended only for the use of the individual or company to whom it is addressed.

Chain of Custody

Page 1 of 1

OnSite Environmental Inc.
14648 NE 95th Street • Redmond, WA 98052
Phone: (425) 883-3881 • Fax: (425) 885-4603

Company: Farallon Consulting
Project Number: 663-010
Project Name: Allison's Norge Village
Project Manager: C. Brock
Sampled by: F. Reider

Turnaround Request (in working days)

(Check One)

- ☐ Same Day ☐ 1 Day
- ☐ 2 Day ☐ 3 Day
- ☒ Standard (7 working days) (TPH analysis 5 working days)
- ☐ _____ (other)

Laboratory Number: 07-075

Requested Analysis

Lab ID	Sample Identification	Date Sampled	Time Sampled	Matrix	# of Cont.	NWTPH-HCID	NWTPH-Gx/BTEX	NWTPH-Dx	Volatiles by 8260B	Halogenated Volatiles by 8260B	Semivolatiles by 8270C	PAHs by 8270C / SIM	PCBs by 8082	Pesticides by 8081A	Herbicides by 8151A	Total RCRA Metals (8)	TCLP Metals	HEM by 1664	VPH	EPH	% Moisture
1	MW9-071007	7/10/07	1150	W	3					X											
2	MW10-071007		1305							X											
3	MW11-071007		1410							X											
4	MW7-071007		1520							X											
5	MW2-071007		1605							X											
6	MW5-071007		1700							X											

	Signature	Company	Date	Time
Relinquished by		Farallon	7/11/07	1400
Received by		Onsite	7-11-07	1400
Relinquished by				
Received by				
Relinquished by				
Received by				
Reviewed by/Date		Reviewed by/Date		

Comments/Special Instructions:

Chromatograms with final report ☐

DISTRIBUTION LEGEND: White - OnSite Copy Yellow - Report Copy Pink - Client Copy

OnSite Environmental Inc.
14648 NE 95th Street, Redmond, WA 98052 • (425) 883-3881

September 12, 2006

Carla Brock
Farallon Consulting, LLC
320 3rd Avenue NE, Suite 200
Issaquah, WA 98027

Re: Analytical Data for Project 663-010
Laboratory Reference No. 0609-008

Dear Carla:

Enclosed are the analytical results and associated quality control data for samples submitted on September 1, 2006.

The standard policy of OnSite Environmental Inc. is to store your samples for 30 days from the date of receipt. If you require longer storage, please contact the laboratory.

We appreciate the opportunity to be of service to you on this project. If you have any questions concerning the data, or need additional information, please feel free to call me.

Sincerely,

David Baumeister
Project Manager

Enclosures

This report pertains to the samples analyzed in accordance with the chain of custody, and is intended only for the use of the individual or company to whom it is addressed.

Date of Report: September 12, 2006
Samples Submitted: September 1, 2006
Laboratory Reference: 0609-008
Project: 663-010

Case Narrative

Samples were collected on August 31, 2006 and received by the laboratory on September 1, 2006. They were maintained at the laboratory at a temperature of 2°C to 6°C except as noted below.

General QA/QC issues associated with the analytical data enclosed in this laboratory report will be indicated with a reference to a comment or explanation on the Data Qualifier page. More complex and involved QA/QC issues will be discussed in detail below.

Halogenated Volatiles EPA 8260B Analysis

Per EPA Method 5035A, samples were received by the laboratory in pre-weighed 40 mL VOA vials within 48 hours of sample collection. They were stored in a freezer at between -7°C and -20°C until extraction or analysis.

Any other QA/QC issues associated with this extraction and analysis will be indicated with a footnote reference and discussed in detail on the Data Qualifier page.

This report pertains to the samples analyzed in accordance with the chain of custody,
and is intended only for the use of the individual or company to whom it is addressed.

Date of Report: September 12, 2006
Samples Submitted: September 1, 2006
Laboratory Reference: 0609-008
Project: 663-010

HALOGENATED VOLATILES by EPA 8260B

Date Extracted: 9-5-06
Date Analyzed: 9-5-06

Matrix: Soil
Units: mg/kg (ppm)

Lab ID: 09-008-01
Client ID: IDW-SP-01

Compound	Results	Flags	PQL
Dichlorodifluoromethane	ND		0.0010
Chloromethane	ND		0.0010
Vinyl Chloride	ND		0.0010
Bromomethane	ND		0.0010
Chloroethane	ND		0.0037
Trichlorofluoromethane	ND		0.0010
1,1-Dichloroethene	ND		0.0010
Iodomethane	ND		0.0037
Methylene Chloride	0.0070	H	0.0037
(trans) 1,2-Dichloroethene	ND		0.0010
1,1-Dichloroethane	ND		0.0010
2,2-Dichloropropane	ND		0.0010
(cis) 1,2-Dichloroethene	ND		0.0010
Bromochloromethane	ND		0.0010
Chloroform	ND		0.0010
1,1,1-Trichloroethane	ND		0.0010
Carbon Tetrachloride	ND		0.0010
1,1-Dichloropropene	ND		0.0010
1,2-Dichloroethane	ND		0.0010
Trichloroethene	ND		0.0010
1,2-Dichloropropane	ND		0.0010
Dibromomethane	ND		0.0010
Bromodichloromethane	ND		0.0010
2-Chloroethyl Vinyl Ether	ND		0.0037
(cis) 1,3-Dichloropropene	ND		0.0010
(trans) 1,3-Dichloropropene	ND		0.0010

This report pertains to the samples analyzed in accordance with the chain of custody,
and is intended only for the use of the individual or company to whom it is addressed.

Date of Report: September 12, 2006
Samples Submitted: September 1, 2006
Laboratory Reference: 0609-008
Project: 663-010

HALOGENATED VOLATILES by EPA 8260B
page 2 of 2

Lab ID: 09-008-01
Client ID: IDW-SP-01

Compound	Results	Flags	PQL
1,1,2-Trichloroethane	ND		0.0010
Tetrachloroethene	0.013		0.0010
1,3-Dichloropropane	ND		0.0010
Dibromochloromethane	ND		0.0010
1,2-Dibromoethane	ND		0.0010
Chlorobenzene	ND		0.0010
1,1,1,2-Tetrachloroethane	ND		0.0010
Bromoform	ND		0.0010
Bromobenzene	ND		0.0010
1,1,2,2-Tetrachloroethane	ND		0.0010
1,2,3-Trichloropropane	ND		0.0010
2-Chlorotoluene	ND		0.0010
4-Chlorotoluene	ND		0.0010
1,3-Dichlorobenzene	ND		0.0010
1,4-Dichlorobenzene	ND		0.0010
1,2-Dichlorobenzene	ND		0.0010
1,2-Dibromo-3-chloropropane	ND		0.0037
1,2,4-Trichlorobenzene	ND		0.0010
Hexachlorobutadiene	ND		0.0037
1,2,3-Trichlorobenzene	ND		0.0010

Surrogate	Percent Recovery	Control Limits
Dibromofluoromethane	92	71-126
Toluene, d8	89	73-130
4-Bromofluorobenzene	109	70-130

This report pertains to the samples analyzed in accordance with the chain of custody,
and is intended only for the use of the individual or company to whom it is addressed.

Date of Report: September 12, 2006
Samples Submitted: September 1, 2006
Laboratory Reference: 0609-008
Project: 663-010

HALOGENATED VOLATILES by EPA 8260B

Date Extracted: 9-5-06
Date Analyzed: 9-5-06

Matrix: Soil
Units: mg/kg (ppm)

Lab ID: 09-008-02
Client ID: IDW-SP-02

Compound	Results	Flags	PQL
Dichlorodifluoromethane	ND		0.0010
Chloromethane	ND		0.0010
Vinyl Chloride	ND		0.0010
Bromomethane	ND		0.0010
Chloroethane	ND		0.0041
Trichlorofluoromethane	ND		0.0010
1,1-Dichloroethene	ND		0.0010
Iodomethane	ND		0.0041
Methylene Chloride	ND		0.0041
(trans) 1,2-Dichloroethene	ND		0.0010
1,1-Dichloroethane	ND		0.0010
2,2-Dichloropropane	ND		0.0010
(cis) 1,2-Dichloroethene	ND		0.0010
Bromochloromethane	ND		0.0010
Chloroform	ND		0.0010
1,1,1-Trichloroethane	ND		0.0010
Carbon Tetrachloride	ND		0.0010
1,1-Dichloropropene	ND		0.0010
1,2-Dichloroethane	ND		0.0010
Trichloroethene	ND		0.0010
1,2-Dichloropropane	ND		0.0010
Dibromomethane	ND		0.0010
Bromodichloromethane	ND		0.0010
2-Chloroethyl Vinyl Ether	ND		0.0041
(cis) 1,3-Dichloropropene	ND		0.0010
(trans) 1,3-Dichloropropene	ND		0.0010

This report pertains to the samples analyzed in accordance with the chain of custody,
and is intended only for the use of the individual or company to whom it is addressed.

Date of Report: September 12, 2006
Samples Submitted: September 1, 2006
Laboratory Reference: 0609-008
Project: 663-010

HALOGENATED VOLATILES by EPA 8260B
page 2 of 2

Lab ID: 09-008-02
Client ID: IDW-SP-02

Compound	Results	Flags	PQL
1,1,2-Trichloroethane	ND		0.0010
Tetrachloroethene	0.016		0.0010
1,3-Dichloropropane	ND		0.0010
Dibromochloromethane	ND		0.0010
1,2-Dibromoethane	ND		0.0010
Chlorobenzene	ND		0.0010
1,1,1,2-Tetrachloroethane	ND		0.0010
Bromoform	ND		0.0010
Bromobenzene	ND		0.0010
1,1,2,2-Tetrachloroethane	ND		0.0010
1,2,3-Trichloropropane	ND		0.0010
2-Chlorotoluene	ND		0.0010
4-Chlorotoluene	ND		0.0010
1,3-Dichlorobenzene	ND		0.0010
1,4-Dichlorobenzene	ND		0.0010
1,2-Dichlorobenzene	ND		0.0010
1,2-Dibromo-3-chloropropane	ND		0.0041
1,2,4-Trichlorobenzene	ND		0.0010
Hexachlorobutadiene	ND		0.0041
1,2,3-Trichlorobenzene	ND		0.0010

Surrogate	Percent Recovery	Control Limits
Dibromofluoromethane	95	71-126
Toluene, d8	84	73-130
4-Bromofluorobenzene	106	70-130

This report pertains to the samples analyzed in accordance with the chain of custody,
and is intended only for the use of the individual or company to whom it is addressed.

Date of Report: September 12, 2006
Samples Submitted: September 1, 2006
Laboratory Reference: 0609-008
Project: 663-010

HALOGENATED VOLATILES by EPA 8260B

Date Extracted: 9-5-06
Date Analyzed: 9-5-06

Matrix: Soil
Units: mg/kg (ppm)

Lab ID: 09-008-03
Client ID: IDW-SP-03

Compound	Results	Flags	PQL
Dichlorodifluoromethane	ND		0.0010
Chloromethane	ND		0.0010
Vinyl Chloride	ND		0.0010
Bromomethane	ND		0.0010
Chloroethane	ND		0.0038
Trichlorofluoromethane	ND		0.0010
1,1-Dichloroethene	ND		0.0010
Iodomethane	ND		0.0038
Methylene Chloride	ND		0.0038
(trans) 1,2-Dichloroethene	ND		0.0010
1,1-Dichloroethane	ND		0.0010
2,2-Dichloropropane	ND		0.0010
(cis) 1,2-Dichloroethene	ND		0.0010
Bromochloromethane	ND		0.0010
Chloroform	ND		0.0010
1,1,1-Trichloroethane	ND		0.0010
Carbon Tetrachloride	ND		0.0010
1,1-Dichloropropene	ND		0.0010
1,2-Dichloroethane	ND		0.0010
Trichloroethene	ND		0.0010
1,2-Dichloropropane	ND		0.0010
Dibromomethane	ND		0.0010
Bromodichloromethane	ND		0.0010
2-Chloroethyl Vinyl Ether	ND		0.0038
(cis) 1,3-Dichloropropene	ND		0.0010
(trans) 1,3-Dichloropropene	ND		0.0010

This report pertains to the samples analyzed in accordance with the chain of custody,
and is intended only for the use of the individual or company to whom it is addressed.

Date of Report: September 12, 2006
Samples Submitted: September 1, 2006
Laboratory Reference: 0609-008
Project: 663-010

HALOGENATED VOLATILES by EPA 8260B
page 2 of 2

Lab ID: 09-008-03
Client ID: IDW-SP-03

Compound	Results	Flags	PQL
1,1,2-Trichloroethane	ND		0.0010
Tetrachloroethene	ND		0.0010
1,3-Dichloropropane	ND		0.0010
Dibromochloromethane	ND		0.0010
1,2-Dibromoethane	ND		0.0010
Chlorobenzene	ND		0.0010
1,1,1,2-Tetrachloroethane	ND		0.0010
Bromoform	ND		0.0010
Bromobenzene	ND		0.0010
1,1,2,2-Tetrachloroethane	ND		0.0010
1,2,3-Trichloropropane	ND		0.0010
2-Chlorotoluene	ND		0.0010
4-Chlorotoluene	ND		0.0010
1,3-Dichlorobenzene	ND		0.0010
1,4-Dichlorobenzene	ND		0.0010
1,2-Dichlorobenzene	ND		0.0010
1,2-Dibromo-3-chloropropane	ND		0.0038
1,2,4-Trichlorobenzene	ND		0.0010
Hexachlorobutadiene	ND		0.0038
1,2,3-Trichlorobenzene	ND		0.0010

Surrogate	Percent Recovery	Control Limits
Dibromofluoromethane	89	71-126
Toluene, d8	83	73-130
4-Bromofluorobenzene	107	70-130

This report pertains to the samples analyzed in accordance with the chain of custody,
and is intended only for the use of the individual or company to whom it is addressed.

Date of Report: September 12, 2006
Samples Submitted: September 1, 2006
Laboratory Reference: 0609-008
Project: 663-010

HALOGENATED VOLATILES by EPA 8260B
METHOD BLANK QUALITY CONTROL
page 1 of 2

Date Extracted: 9-5-06
Date Analyzed: 9-5-06

Matrix: Soil
Units: mg/kg (ppm)

Lab ID: MB0905S1

Compound	Results	Flags	PQL
Dichlorodifluoromethane	ND		0.0010
Chloromethane	ND		0.0010
Vinyl Chloride	ND		0.0010
Bromomethane	ND		0.0010
Chloroethane	ND		0.0050
Trichlorofluoromethane	ND		0.0010
1,1-Dichloroethene	ND		0.0010
Iodomethane	ND		0.0050
Methylene Chloride	ND		0.0050
(trans) 1,2-Dichloroethene	ND		0.0010
1,1-Dichloroethane	ND		0.0010
2,2-Dichloropropane	ND		0.0010
(cis) 1,2-Dichloroethene	ND		0.0010
Bromochloromethane	ND		0.0010
Chloroform	ND		0.0010
1,1,1-Trichloroethane	ND		0.0010
Carbon Tetrachloride	ND		0.0010
1,1-Dichloropropene	ND		0.0010
1,2-Dichloroethane	ND		0.0010
Trichloroethene	ND		0.0010
1,2-Dichloropropane	ND		0.0010
Dibromomethane	ND		0.0010
Bromodichloromethane	ND		0.0010
2-Chloroethyl Vinyl Ether	ND		0.0050
(cis) 1,3-Dichloropropene	ND		0.0010
(trans) 1,3-Dichloropropene	ND		0.0010

This report pertains to the samples analyzed in accordance with the chain of custody,
and is intended only for the use of the individual or company to whom it is addressed.

Date of Report: September 12, 2006
Samples Submitted: September 1, 2006
Laboratory Reference: 0609-008
Project: 663-010

HALOGENATED VOLATILES by EPA 8260B
METHOD BLANK QUALITY CONTROL
page 2 of 2

Lab ID: MB0905S1

Compound	Results	Flags	PQL
1,1,2-Trichloroethane	ND		0.0010
Tetrachloroethene	ND		0.0010
1,3-Dichloropropane	ND		0.0010
Dibromochloromethane	ND		0.0010
1,2-Dibromoethane	ND		0.0010
Chlorobenzene	ND		0.0010
1,1,1,2-Tetrachloroethane	ND		0.0010
Bromoform	ND		0.0010
Bromobenzene	ND		0.0010
1,1,2,2-Tetrachloroethane	ND		0.0010
1,2,3-Trichloropropane	ND		0.0010
2-Chlorotoluene	ND		0.0010
4-Chlorotoluene	ND		0.0010
1,3-Dichlorobenzene	ND		0.0010
1,4-Dichlorobenzene	ND		0.0010
1,2-Dichlorobenzene	ND		0.0010
1,2-Dibromo-3-chloropropane	ND		0.0050
1,2,4-Trichlorobenzene	ND		0.0010
Hexachlorobutadiene	ND		0.0050
1,2,3-Trichlorobenzene	ND		0.0010

Surrogate	Percent Recovery	Control Limits
Dibromofluoromethane	96	71-126
Toluene, d8	92	73-130
4-Bromofluorobenzene	108	70-130

This report pertains to the samples analyzed in accordance with the chain of custody,
and is intended only for the use of the individual or company to whom it is addressed.

Date of Report: September 12, 2006
Samples Submitted: September 1, 2006
Laboratory Reference: 0609-008
Project: 663-010

HALOGENATED VOLATILES by EPA 8260B
SB/SBD QUALITY CONTROL

Date Extracted: 9-5-06
Date Analyzed: 9-5-06

Matrix: Soil
Units: mg/kg (ppm)

Lab ID: SB0905S1

Compound	Spike Amount	SB	Percent Recovery	SBD	Percent Recovery	Recovery Limits	Flags
1,1-Dichloroethene	0.0500	0.0557	111	0.0537	107	70-130	
Benzene	0.0500	0.0467	93	0.0465	93	70-130	
Trichloroethene	0.0500	0.0452	90	0.0477	95	70-130	
Toluene	0.0500	0.0445	89	0.0498	100	70-130	
Chlorobenzene	0.0500	0.0504	101	0.0493	99	70-130	

	RPD	RPD Limit	Flags
1,1-Dichloroethene	4	11	
Benzene	1	11	
Trichloroethene	5	13	
Toluene	11	11	
Chlorobenzene	2	12	

This report pertains to the samples analyzed in accordance with the chain of custody,
and is intended only for the use of the individual or company to whom it is addressed.

Date of Report: September 12, 2006
Samples Submitted: September 1, 2006
Laboratory Reference: 0609-008
Project: 663-010

HALOGENATED VOLATILES by EPA 8260B

Date Extracted: 9-5-06
Date Analyzed: 9-5-06

Matrix: Water
Units: ug/L (ppb)

Lab ID: 09-008-04
Client ID: IDW-DEV-01

Compound	Results	Flags	PQL
Dichlorodifluoromethane	ND		0.20
Chloromethane	ND		1.0
Vinyl Chloride	ND		0.20
Bromomethane	ND		0.20
Chloroethane	ND		1.0
Trichlorofluoromethane	ND		0.20
1,1-Dichloroethene	ND		0.20
Iodomethane	ND		1.0
Methylene Chloride	ND		1.0
(trans) 1,2-Dichloroethene	ND		0.20
1,1-Dichloroethane	ND		0.20
2,2-Dichloropropane	ND		0.20
(cis) 1,2-Dichloroethene	ND		0.20
Bromochloromethane	ND		0.20
Chloroform	ND		0.20
1,1,1-Trichloroethane	ND		0.20
Carbon Tetrachloride	ND		0.20
1,1-Dichloropropene	ND		0.20
1,2-Dichloroethane	ND		0.20
Trichloroethene	ND		0.20
1,2-Dichloropropane	ND		0.20
Dibromomethane	ND		0.20
Bromodichloromethane	ND		0.20
2-Chloroethyl Vinyl Ether	ND		1.0
(cis) 1,3-Dichloropropene	ND		0.20
(trans) 1,3-Dichloropropene	ND		0.20

This report pertains to the samples analyzed in accordance with the chain of custody,
and is intended only for the use of the individual or company to whom it is addressed.

Date of Report: September 12, 2006
Samples Submitted: September 1, 2006
Laboratory Reference: 0609-008
Project: 663-010

HALOGENATED VOLATILES by EPA 8260B
page 2 of 2

Lab ID: 09-008-04
Client ID: IDW-DEV-01

Compound	**Results**	**Flags**	**PQL**
1,1,2-Trichloroethane	ND		0.20
Tetrachloroethene	0.49		0.20
1,3-Dichloropropane	ND		0.20
Dibromochloromethane	ND		0.20
1,2-Dibromoethane	ND		0.20
Chlorobenzene	ND		0.20
1,1,1,2-Tetrachloroethane	ND		0.20
Bromoform	ND		1.0
Bromobenzene	ND		0.20
1,1,2,2-Tetrachloroethane	ND		0.20
1,2,3-Trichloropropane	ND		0.20
2-Chlorotoluene	ND		0.20
4-Chlorotoluene	ND		0.20
1,3-Dichlorobenzene	ND		0.20
1,4-Dichlorobenzene	ND		0.20
1,2-Dichlorobenzene	ND		0.20
1,2-Dibromo-3-chloropropane	ND		1.0
1,2,4-Trichlorobenzene	ND		0.20
Hexachlorobutadiene	ND		0.20
1,2,3-Trichlorobenzene	ND		0.20

Surrogate	**Percent Recovery**	**Control Limits**
Dibromofluoromethane	95	70-123
Toluene, d8	89	70-119
4-Bromofluorobenzene	90	70-119

This report pertains to the samples analyzed in accordance with the chain of custody,
and is intended only for the use of the individual or company to whom it is addressed.

Date of Report: September 12, 2006
Samples Submitted: September 1, 2006
Laboratory Reference: 0609-008
Project: 663-010

HALOGENATED VOLATILES by EPA 8260B

Date Extracted: 9-5-06
Date Analyzed: 9-5-06

Matrix: Water
Units: ug/L (ppb)

Lab ID: 09-008-05
Client ID: IDW-DEC-01

Compound	Results	Flags	PQL
Dichlorodifluoromethane	ND		0.20
Chloromethane	ND		1.0
Vinyl Chloride	ND		0.20
Bromomethane	ND		0.20
Chloroethane	ND		1.0
Trichlorofluoromethane	ND		0.20
1,1-Dichloroethene	ND		0.20
Iodomethane	ND		1.0
Methylene Chloride	ND		1.0
(trans) 1,2-Dichloroethene	ND		0.20
1,1-Dichloroethane	ND		0.20
2,2-Dichloropropane	ND		0.20
(cis) 1,2-Dichloroethene	ND		0.20
Bromochloromethane	ND		0.20
Chloroform	6.8		0.20
1,1,1-Trichloroethane	ND		0.20
Carbon Tetrachloride	ND		0.20
1,1-Dichloropropene	ND		0.20
1,2-Dichloroethane	ND		0.20
Trichloroethene	ND		0.20
1,2-Dichloropropane	ND		0.20
Dibromomethane	ND		0.20
Bromodichloromethane	0.21		0.20
2-Chloroethyl Vinyl Ether	ND		1.0
(cis) 1,3-Dichloropropene	ND		0.20
(trans) 1,3-Dichloropropene	ND		0.20

This report pertains to the samples analyzed in accordance with the chain of custody,
and is intended only for the use of the individual or company to whom it is addressed.

Date of Report: September 12, 2006
Samples Submitted: September 1, 2006
Laboratory Reference: 0609-008
Project: 663-010

HALOGENATED VOLATILES by EPA 8260B
page 2 of 2

Lab ID: 09-008-05
Client ID: IDW-DEC-01

Compound	**Results**	**Flags**	**PQL**
1,1,2-Trichloroethane	ND		0.20
Tetrachloroethene	0.41		0.20
1,3-Dichloropropane	ND		0.20
Dibromochloromethane	ND		0.20
1,2-Dibromoethane	ND		0.20
Chlorobenzene	ND		0.20
1,1,1,2-Tetrachloroethane	ND		0.20
Bromoform	ND		1.0
Bromobenzene	ND		0.20
1,1,2,2-Tetrachloroethane	ND		0.20
1,2,3-Trichloropropane	ND		0.20
2-Chlorotoluene	ND		0.20
4-Chlorotoluene	ND		0.20
1,3-Dichlorobenzene	ND		0.20
1,4-Dichlorobenzene	ND		0.20
1,2-Dichlorobenzene	ND		0.20
1,2-Dibromo-3-chloropropane	ND		1.0
1,2,4-Trichlorobenzene	ND		0.20
Hexachlorobutadiene	ND		0.20
1,2,3-Trichlorobenzene	ND		0.20

Surrogate	**Percent Recovery**	**Control Limits**
Dibromofluoromethane	98	70-123
Toluene, d8	91	70-119
4-Bromofluorobenzene	90	70-119

This report pertains to the samples analyzed in accordance with the chain of custody,
and is intended only for the use of the individual or company to whom it is addressed.

Date of Report: September 12, 2006
Samples Submitted: September 1, 2006
Laboratory Reference: 0609-008
Project: 663-010

HALOGENATED VOLATILES by EPA 8260B

Date Extracted: 9-5-06
Date Analyzed: 9-5-06

Matrix: Water
Units: ug/L (ppb)

Lab ID: 09-008-06
Client ID: IDW-DEC-02

Compound	Results	Flags	PQL
Dichlorodifluoromethane	ND		0.20
Chloromethane	ND		1.0
Vinyl Chloride	ND		0.20
Bromomethane	ND		0.20
Chloroethane	ND		1.0
Trichlorofluoromethane	ND		0.20
1,1-Dichloroethene	ND		0.20
Iodomethane	ND		1.0
Methylene Chloride	ND		1.0
(trans) 1,2-Dichloroethene	ND		0.20
1,1-Dichloroethane	ND		0.20
2,2-Dichloropropane	ND		0.20
(cis) 1,2-Dichloroethene	ND		0.20
Bromochloromethane	ND		0.20
Chloroform	ND		0.20
1,1,1-Trichloroethane	ND		0.20
Carbon Tetrachloride	ND		0.20
1,1-Dichloropropene	ND		0.20
1,2-Dichloroethane	ND		0.20
Trichloroethene	ND		0.20
1,2-Dichloropropane	ND		0.20
Dibromomethane	ND		0.20
Bromodichloromethane	ND		0.20
2-Chloroethyl Vinyl Ether	ND		1.0
(cis) 1,3-Dichloropropene	ND		0.20
(trans) 1,3-Dichloropropene	ND		0.20

This report pertains to the samples analyzed in accordance with the chain of custody,
and is intended only for the use of the individual or company to whom it is addressed.

Date of Report: September 12, 2006
Samples Submitted: September 1, 2006
Laboratory Reference: 0609-008
Project: 663-010

HALOGENATED VOLATILES by EPA 8260B
page 2 of 2

Lab ID: 09-008-06
Client ID: IDW-DEC-02

Compound	**Results**	**Flags**	**PQL**
1,1,2-Trichloroethane	ND		0.20
Tetrachloroethene	2.0		0.20
1,3-Dichloropropane	ND		0.20
Dibromochloromethane	ND		0.20
1,2-Dibromoethane	ND		0.20
Chlorobenzene	ND		0.20
1,1,1,2-Tetrachloroethane	ND		0.20
Bromoform	ND		1.0
Bromobenzene	ND		0.20
1,1,2,2-Tetrachloroethane	ND		0.20
1,2,3-Trichloropropane	ND		0.20
2-Chlorotoluene	ND		0.20
4-Chlorotoluene	ND		0.20
1,3-Dichlorobenzene	ND		0.20
1,4-Dichlorobenzene	ND		0.20
1,2-Dichlorobenzene	ND		0.20
1,2-Dibromo-3-chloropropane	ND		1.0
1,2,4-Trichlorobenzene	ND		0.20
Hexachlorobutadiene	ND		0.20
1,2,3-Trichlorobenzene	ND		0.20

Surrogate	**Percent Recovery**	**Control Limits**
Dibromofluoromethane	98	70-123
Toluene, d8	90	70-119
4-Bromofluorobenzene	88	70-119

This report pertains to the samples analyzed in accordance with the chain of custody,
and is intended only for the use of the individual or company to whom it is addressed.

Date of Report: September 12, 2006
Samples Submitted: September 1, 2006
Laboratory Reference: 0609-008
Project: 663-010

HALOGENATED VOLATILES by EPA 8260B
METHOD BLANK QUALITY CONTROL
page 1 of 2

Date Extracted: 9-5-06
Date Analyzed: 9-5-06

Matrix: Water
Units: ug/L (ppb)

Lab ID: MB0905W1

Compound	Results	Flags	PQL
Dichlorodifluoromethane	ND		0.20
Chloromethane	ND		1.0
Vinyl Chloride	ND		0.20
Bromomethane	ND		0.20
Chloroethane	ND		1.0
Trichlorofluoromethane	ND		0.20
1,1-Dichloroethene	ND		0.20
Iodomethane	ND		1.0
Methylene Chloride	ND		2.0
(trans) 1,2-Dichloroethene	ND		0.20
1,1-Dichloroethane	ND		0.20
2,2-Dichloropropane	ND		0.20
(cis) 1,2-Dichloroethene	ND		0.20
Bromochloromethane	ND		0.20
Chloroform	ND		0.20
1,1,1-Trichloroethane	ND		0.20
Carbon Tetrachloride	ND		0.20
1,1-Dichloropropene	ND		0.20
1,2-Dichloroethane	ND		0.20
Trichloroethene	ND		0.20
1,2-Dichloropropane	ND		0.20
Dibromomethane	ND		0.20
Bromodichloromethane	ND		0.20
2-Chloroethyl Vinyl Ether	ND		1.0
(cis) 1,3-Dichloropropene	ND		0.20
(trans) 1,3-Dichloropropene	ND		0.20

This report pertains to the samples analyzed in accordance with the chain of custody,
and is intended only for the use of the individual or company to whom it is addressed.

Date of Report: September 12, 2006
Samples Submitted: September 1, 2006
Laboratory Reference: 0609-008
Project: 663-010

HALOGENATED VOLATILES by EPA 8260B
METHOD BLANK QUALITY CONTROL
page 2 of 2

Lab ID: MB0905W1

Compound	Results	Flags	PQL
1,1,2-Trichloroethane	ND		0.20
Tetrachloroethene	ND		0.20
1,3-Dichloropropane	ND		0.20
Dibromochloromethane	ND		0.20
1,2-Dibromoethane	ND		0.20
Chlorobenzene	ND		0.20
1,1,1,2-Tetrachloroethane	ND		0.20
Bromoform	ND		1.0
Bromobenzene	ND		0.20
1,1,2,2-Tetrachloroethane	ND		0.20
1,2,3-Trichloropropane	ND		0.20
2-Chlorotoluene	ND		0.20
4-Chlorotoluene	ND		0.20
1,3-Dichlorobenzene	ND		0.20
1,4-Dichlorobenzene	ND		0.20
1,2-Dichlorobenzene	ND		0.20
1,2-Dibromo-3-chloropropane	ND		1.0
1,2,4-Trichlorobenzene	ND		0.20
Hexachlorobutadiene	ND		0.20
1,2,3-Trichlorobenzene	ND		0.20

Surrogate	Percent Recovery	Control Limits
Dibromofluoromethane	93	70-123
Toluene, d8	89	70-119
4-Bromofluorobenzene	87	70-119

This report pertains to the samples analyzed in accordance with the chain of custody,
and is intended only for the use of the individual or company to whom it is addressed.

Date of Report: September 12, 2006
Samples Submitted: September 1, 2006
Laboratory Reference: 0609-008
Project: 663-010

HALOGENATED VOLATILES by EPA 8260B
SB/SBD QUALITY CONTROL

Date Extracted: 9-5-06
Date Analyzed: 9-5-06

Matrix: Water
Units: ug/L (ppb)

Lab ID: SB0905W1

Compound	Spike Amount	SB	Percent Recovery	SBD	Percent Recovery	Recovery Limits	Flags
1,1-Dichloroethene	10.0	8.63	86	9.01	90	70-130	
Benzene	10.0	9.39	94	9.98	100	70-130	
Trichloroethene	10.0	8.60	86	8.70	87	70-130	
Toluene	10.0	9.22	92	9.32	93	70-130	
Chlorobenzene	10.0	9.23	92	9.43	94	70-130	

	RPD	RPD Limit	Flags
1,1-Dichloroethene	4	17	
Benzene	6	13	
Trichloroethene	1	12	
Toluene	1	14	
Chlorobenzene	2	9	

This report pertains to the samples analyzed in accordance with the chain of custody,
and is intended only for the use of the individual or company to whom it is addressed.

Date of Report: September 12, 2006
Samples Submitted: September 1, 2006
Laboratory Reference: 0609-008
Project: 663-010

% MOISTURE

Date Analyzed: 9-5-06

Client ID	Lab ID	% Moisture
IDW-SP-01	09-008-01	11
IDW-SP-02	09-008-02	10
IDW-SP-03	09-008-03	12

This report pertains to the samples analyzed in accordance with the chain of custody,
and is intended only for the use of the individual or company to whom it is addressed.

OnSite Environmental Inc.

Data Qualifiers and Abbreviations

A - Due to a high sample concentration, the amount spiked is insufficient for meaningful MS/MSD recovery data.

B - The analyte indicated was also found in the blank sample.

C - The duplicate RPD is outside control limits due to high result variability when analyte concentrations are within five times the quantitation limit.

E - The value reported exceeds the quantitation range and is an estimate.

F - Surrogate recovery data is not available due to the high concentration of coeluting target compounds.

G - Insufficient sample quantity for duplicate analysis.

H - The analyte indicated is a common laboratory solvent and may have been introduced during sample preparation, and be impacting the sample result.

I - Compound recovery is outside of the control limits.

J - The value reported was below the practical quantitation limit. The value is an estimate.

K - Sample duplicate RPD is outside control limits due to sample inhomogeneity. The sample was re-extracted and re-analyzed with similar results.

L - The RPD is outside of the control limits.

M - Hydrocarbons in the gasoline range (toluene-napthalene) are present in the sample.

O - Hydrocarbons indicative of diesel fuel are present in the sample and are impacting the gasoline result.

P - The RPD of the detected concentrations between the two columns is greater than 40.

Q - Surrogate recovery is outside of the control limits.

S - Surrogate recovery data is not available due to the necessary dilution of the sample.

T - The sample chromatogram is not similar to a typical _____.

U - The analyte was analyzed for, but was not detected above the reported sample quantitation limit.

V - Matrix Spike/Matrix Spike Duplicate recoveries are outside control limits due to matrix effects.

W - Matrix Spike/Matrix Spike Duplicate RPD are outside control limits due to matrix effects.

X - Sample extract treated with a silica gel cleanup procedure.

Y - Sample extract treated with an acid/silica gel cleanup procedure.

Z -

ND - Not Detected at PQL
PQL - Practical Quantitation Limit
RPD - Relative Percent Difference

This report pertains to the samples analyzed in accordance with the chain of custody, and is intended only for the use of the individual or company to whom it is addressed.

Chain of Custody

Page 1 of 1

OnSite Environmental Inc.
14648 NE 95th Street • Redmond, WA 98052
Phone: (425) 883-3881 • Fax: (425) 885-4603

Company: Farallon
Project Number: 663-010
Project Name: Allison's Norge Village
Project Manager: Carla Brock
Sampled by: J Schmitt

Turnaround Request (in working days)

(Check One)

- ☐ Same Day
- ☐ 1 Day
- ☐ 2 Day
- ☐ 3 Day
- ☑ Standard (7 working days) (TPH analysis 5 working days)
- ☐ _____ (other)

Laboratory Number: 09-008

Requested Analysis

Lab ID	Sample Identification	Date Sampled	Time Sampled	Matrix	# of Cont.	NWTPH-HCID	NWTPH-Gx/BTEX	NWTPH-Dx	Volatiles by 8260B	Halogenated Volatiles by 8260B	Semivolatiles by 8270C	PAHs by 8270C / SIM	PCBs by 8082	Pesticides by 8081A	Herbicides by 8151A	Total RCRA Metals (8)	TCLP Metals	HEM by 1664	VPH	EPH	% Moisture
1	IDW-SP-01	8/31/06	1618	S	4					X											X
2	IDW-SP-02	↓	1624	↓	↓					X											↓
3	IDW-SP-03		1630							X											
4	IDW-DEV-01		1650	W	3					X											
5	IDW-DEC-01		1655	↓	↓					X											
6	IDW-DEC-02	↓	1700	↓	↓					X											

	Signature	Company	Date	Time	Comments/Special Instructions:
Relinquished by		Farallon	9/01/06	1435	
Received by			9/1/06	1435	
Relinquished by					
Received by					
Relinquished by					
Received by					
Reviewed by/Date		Reviewed by/Date			Chromatograms with final report ☐

DISTRIBUTION LEGEND: White - OnSite Copy Yellow - Report Copy Pink - Client Copy

OnSite Environmental Inc.
14648 NE 95th Street, Redmond, WA 98052 • (425) 883-3881

September 25, 2006

Carla Brock
Farallon Consulting, LLC
320 3rd Avenue NE, Suite 200
Issaquah, WA 98027

Re: Analytical Data for Project 663-010-008
Laboratory Reference No. 0609-131

Dear Carla:

Enclosed are the analytical results and associated quality control data for samples submitted on September 18, 2006.

The standard policy of OnSite Environmental Inc. is to store your samples for 30 days from the date of receipt. If you require longer storage, please contact the laboratory.

We appreciate the opportunity to be of service to you on this project. If you have any questions concerning the data, or need additional information, please feel free to call me.

Sincerely,

David Baumeister
Project Manager

Enclosures

This report pertains to the samples analyzed in accordance with the chain of custody, and is intended only for the use of the individual or company to whom it is addressed.

Date of Report: September 25, 2006
Samples Submitted: September 18, 2006
Laboratory Reference: 0609-131
Project: 663-010-008

Case Narrative

Samples were collected on September 16 and 17, 2006 and received by the laboratory on September 18, 2006. They were maintained at the laboratory at a temperature of $2^{o}C$ to $6^{o}C$ except as noted below.

General QA/QC issues associated with the analytical data enclosed in this laboratory report will be indicated with a reference to a comment or explanation on the Data Qualifier page. More complex and involved QA/QC issues will be discussed in detail below.

This report pertains to the samples analyzed in accordance with the chain of custody,
and is intended only for the use of the individual or company to whom it is addressed.

Date of Report: September 25, 2006
Samples Submitted: September 18, 2006
Laboratory Reference: 0609-131
Project: 663-010-008

HALOGENATED VOLATILES by EPA 8260B

Date Extracted: 9-20-06
Date Analyzed: 9-20-06

Matrix: Water
Units: ug/L (ppb)

Lab ID: 09-131-01
Client ID: MW-10-091606

Compound	Results	Flags	PQL
Dichlorodifluoromethane	ND		0.20
Chloromethane	ND		1.0
Vinyl Chloride	ND		0.20
Bromomethane	ND		0.20
Chloroethane	ND		1.0
Trichlorofluoromethane	ND		0.20
1,1-Dichloroethene	ND		0.20
Iodomethane	ND		1.0
Methylene Chloride	ND		1.0
(trans) 1,2-Dichloroethene	ND		0.20
1,1-Dichloroethane	ND		0.20
2,2-Dichloropropane	ND		0.20
(cis) 1,2-Dichloroethene	ND		0.20
Bromochloromethane	ND		0.20
Chloroform	ND		0.20
1,1,1-Trichloroethane	ND		0.20
Carbon Tetrachloride	ND		0.20
1,1-Dichloropropene	ND		0.20
1,2-Dichloroethane	ND		0.20
Trichloroethene	ND		0.20
1,2-Dichloropropane	ND		0.20
Dibromomethane	ND		0.20
Bromodichloromethane	ND		0.20
2-Chloroethyl Vinyl Ether	ND		1.0
(cis) 1,3-Dichloropropene	ND		0.20
(trans) 1,3-Dichloropropene	ND		0.20

This report pertains to the samples analyzed in accordance with the chain of custody,
and is intended only for the use of the individual or company to whom it is addressed.

Date of Report: September 25, 2006
Samples Submitted: September 18, 2006
Laboratory Reference: 0609-131
Project: 663-010-008

HALOGENATED VOLATILES by EPA 8260B
page 2 of 2

Lab ID: 09-131-01
Client ID: MW-10-091606

Compound	Results	Flags	PQL
1,1,2-Trichloroethane	ND		0.20
Tetrachloroethene	ND		0.20
1,3-Dichloropropane	ND		0.20
Dibromochloromethane	ND		0.20
1,2-Dibromoethane	ND		0.20
Chlorobenzene	ND		0.20
1,1,1,2-Tetrachloroethane	ND		0.20
Bromoform	ND		1.0
Bromobenzene	ND		0.20
1,1,2,2-Tetrachloroethane	ND		0.20
1,2,3-Trichloropropane	ND		0.20
2-Chlorotoluene	ND		0.20
4-Chlorotoluene	ND		0.20
1,3-Dichlorobenzene	ND		0.20
1,4-Dichlorobenzene	ND		0.20
1,2-Dichlorobenzene	ND		0.20
1,2-Dibromo-3-chloropropane	ND		1.0
1,2,4-Trichlorobenzene	ND		0.20
Hexachlorobutadiene	ND		0.20
1,2,3-Trichlorobenzene	ND		0.20

Surrogate	Percent Recovery	Control Limits
Dibromofluoromethane	94	70-123
Toluene, d8	96	70-119
4-Bromofluorobenzene	94	70-119

This report pertains to the samples analyzed in accordance with the chain of custody,
and is intended only for the use of the individual or company to whom it is addressed.

Date of Report: September 25, 2006
Samples Submitted: September 18, 2006
Laboratory Reference: 0609-131
Project: 663-010-008

HALOGENATED VOLATILES by EPA 8260B
page 1 of 2

Date Extracted: 9-20-06
Date Analyzed: 9-20-06

Matrix: Water
Units: ug/L (ppb)

Lab ID: 09-131-02
Client ID: MW9-091606

Compound	Results	Flags	PQL
Dichlorodifluoromethane	ND		0.20
Chloromethane	ND		1.0
Vinyl Chloride	ND		0.20
Bromomethane	ND		0.20
Chloroethane	ND		1.0
Trichlorofluoromethane	ND		0.20
1,1-Dichloroethene	ND		0.20
Iodomethane	ND		1.0
Methylene Chloride	ND		1.0
(trans) 1,2-Dichloroethene	ND		0.20
1,1-Dichloroethane	ND		0.20
2,2-Dichloropropane	ND		0.20
(cis) 1,2-Dichloroethene	ND		0.20
Bromochloromethane	ND		0.20
Chloroform	ND		0.20
1,1,1-Trichloroethane	ND		0.20
Carbon Tetrachloride	ND		0.20
1,1-Dichloropropene	ND		0.20
1,2-Dichloroethane	ND		0.20
Trichloroethene	ND		0.20
1,2-Dichloropropane	ND		0.20
Dibromomethane	ND		0.20
Bromodichloromethane	ND		0.20
2-Chloroethyl Vinyl Ether	ND		1.0
(cis) 1,3-Dichloropropene	ND		0.20
(trans) 1,3-Dichloropropene	ND		0.20

This report pertains to the samples analyzed in accordance with the chain of custody,
and is intended only for the use of the individual or company to whom it is addressed.

Date of Report: September 25, 2006
Samples Submitted: September 18, 2006
Laboratory Reference: 0609-131
Project: 663-010-008

HALOGENATED VOLATILES by EPA 8260B
page 2 of 2

Lab ID: 09-131-02
Client ID: MW9-091606

Compound	Results	Flags	PQL
1,1,2-Trichloroethane	ND		0.20
Tetrachloroethene	ND		0.20
1,3-Dichloropropane	ND		0.20
Dibromochloromethane	ND		0.20
1,2-Dibromoethane	ND		0.20
Chlorobenzene	ND		0.20
1,1,1,2-Tetrachloroethane	ND		0.20
Bromoform	ND		1.0
Bromobenzene	ND		0.20
1,1,2,2-Tetrachloroethane	ND		0.20
1,2,3-Trichloropropane	ND		0.20
2-Chlorotoluene	ND		0.20
4-Chlorotoluene	ND		0.20
1,3-Dichlorobenzene	ND		0.20
1,4-Dichlorobenzene	ND		0.20
1,2-Dichlorobenzene	ND		0.20
1,2-Dibromo-3-chloropropane	ND		1.0
1,2,4-Trichlorobenzene	ND		0.20
Hexachlorobutadiene	ND		0.20
1,2,3-Trichlorobenzene	ND		0.20

Surrogate	Percent Recovery	Control Limits
Dibromofluoromethane	93	70-123
Toluene, d8	97	70-119
4-Bromofluorobenzene	93	70-119

This report pertains to the samples analyzed in accordance with the chain of custody,
and is intended only for the use of the individual or company to whom it is addressed.

Date of Report: September 25, 2006
Samples Submitted: September 18, 2006
Laboratory Reference: 0609-131
Project: 663-010-008

HALOGENATED VOLATILES by EPA 8260B

page 1 of 2

Date Extracted: 9-20-06
Date Analyzed: 9-20-06

Matrix: Water
Units: ug/L (ppb)

Lab ID: 09-131-03
Client ID: MW11-091606

Compound	Results	Flags	PQL
Dichlorodifluoromethane	ND		0.20
Chloromethane	ND		1.0
Vinyl Chloride	ND		0.20
Bromomethane	ND		0.20
Chloroethane	ND		1.0
Trichlorofluoromethane	ND		0.20
1,1-Dichloroethene	ND		0.20
Iodomethane	ND		1.0
Methylene Chloride	ND		1.0
(trans) 1,2-Dichloroethene	ND		0.20
1,1-Dichloroethane	ND		0.20
2,2-Dichloropropane	ND		0.20
(cis) 1,2-Dichloroethene	ND		0.20
Bromochloromethane	ND		0.20
Chloroform	ND		0.20
1,1,1-Trichloroethane	ND		0.20
Carbon Tetrachloride	ND		0.20
1,1-Dichloropropene	ND		0.20
1,2-Dichloroethane	ND		0.20
Trichloroethene	ND		0.20
1,2-Dichloropropane	ND		0.20
Dibromomethane	ND		0.20
Bromodichloromethane	ND		0.20
2-Chloroethyl Vinyl Ether	ND		1.0
(cis) 1,3-Dichloropropene	ND		0.20
(trans) 1,3-Dichloropropene	ND		0.20

This report pertains to the samples analyzed in accordance with the chain of custody,
and is intended only for the use of the individual or company to whom it is addressed.

Date of Report: September 25, 2006
Samples Submitted: September 18, 2006
Laboratory Reference: 0609-131
Project: 663-010-008

HALOGENATED VOLATILES by EPA 8260B
page 2 of 2

Lab ID: 09-131-03
Client ID: MW11-091606

Compound	**Results**	**Flags**	**PQL**
1,1,2-Trichloroethane	ND		0.20
Tetrachloroethene	0.42		0.20
1,3-Dichloropropane	ND		0.20
Dibromochloromethane	ND		0.20
1,2-Dibromoethane	ND		0.20
Chlorobenzene	ND		0.20
1,1,1,2-Tetrachloroethane	ND		0.20
Bromoform	ND		1.0
Bromobenzene	ND		0.20
1,1,2,2-Tetrachloroethane	ND		0.20
1,2,3-Trichloropropane	ND		0.20
2-Chlorotoluene	ND		0.20
4-Chlorotoluene	ND		0.20
1,3-Dichlorobenzene	ND		0.20
1,4-Dichlorobenzene	ND		0.20
1,2-Dichlorobenzene	ND		0.20
1,2-Dibromo-3-chloropropane	ND		1.0
1,2,4-Trichlorobenzene	ND		0.20
Hexachlorobutadiene	ND		0.20
1,2,3-Trichlorobenzene	ND		0.20

Surrogate	**Percent Recovery**	**Control Limits**
Dibromofluoromethane	93	70-123
Toluene, d8	96	70-119
4-Bromofluorobenzene	94	70-119

This report pertains to the samples analyzed in accordance with the chain of custody,
and is intended only for the use of the individual or company to whom it is addressed.

Date of Report: September 25, 2006
Samples Submitted: September 18, 2006
Laboratory Reference: 0609-131
Project: 663-010-008

HALOGENATED VOLATILES by EPA 8260B

Date Extracted: 9-20-06
Date Analyzed: 9-20-06

Matrix: Water
Units: ug/L (ppb)

Lab ID: 09-131-04
Client ID: MW7-091706

Compound	Results	Flags	PQL
Dichlorodifluoromethane	ND		0.20
Chloromethane	ND		1.0
Vinyl Chloride	ND		0.20
Bromomethane	ND		0.20
Chloroethane	ND		1.0
Trichlorofluoromethane	ND		0.20
1,1-Dichloroethene	ND		0.20
Iodomethane	ND		1.0
Methylene Chloride	ND		1.0
(trans) 1,2-Dichloroethene	ND		0.20
1,1-Dichloroethane	ND		0.20
2,2-Dichloropropane	ND		0.20
(cis) 1,2-Dichloroethene	ND		0.20
Bromochloromethane	ND		0.20
Chloroform	ND		0.20
1,1,1-Trichloroethane	ND		0.20
Carbon Tetrachloride	ND		0.20
1,1-Dichloropropene	ND		0.20
1,2-Dichloroethane	ND		0.20
Trichloroethene	ND		0.20
1,2-Dichloropropane	ND		0.20
Dibromomethane	ND		0.20
Bromodichloromethane	ND		0.20
2-Chloroethyl Vinyl Ether	ND		1.0
(cis) 1,3-Dichloropropene	ND		0.20
(trans) 1,3-Dichloropropene	ND		0.20

This report pertains to the samples analyzed in accordance with the chain of custody,
and is intended only for the use of the individual or company to whom it is addressed.

Date of Report: September 25, 2006
Samples Submitted: September 18, 2006
Laboratory Reference: 0609-131
Project: 663-010-008

HALOGENATED VOLATILES by EPA 8260B
page 2 of 2

Lab ID: 09-131-04
Client ID: MW7-091706

Compound	Results	Flags	PQL
1,1,2-Trichloroethane	ND		0.20
Tetrachloroethene	7.3		0.20
1,3-Dichloropropane	ND		0.20
Dibromochloromethane	ND		0.20
1,2-Dibromoethane	ND		0.20
Chlorobenzene	ND		0.20
1,1,1,2-Tetrachloroethane	ND		0.20
Bromoform	ND		1.0
Bromobenzene	ND		0.20
1,1,2,2-Tetrachloroethane	ND		0.20
1,2,3-Trichloropropane	ND		0.20
2-Chlorotoluene	ND		0.20
4-Chlorotoluene	ND		0.20
1,3-Dichlorobenzene	ND		0.20
1,4-Dichlorobenzene	ND		0.20
1,2-Dichlorobenzene	ND		0.20
1,2-Dibromo-3-chloropropane	ND		1.0
1,2,4-Trichlorobenzene	ND		0.20
Hexachlorobutadiene	ND		0.20
1,2,3-Trichlorobenzene	ND		0.20

Surrogate	Percent Recovery	Control Limits
Dibromofluoromethane	96	70-123
Toluene, d8	96	70-119
4-Bromofluorobenzene	94	70-119

This report pertains to the samples analyzed in accordance with the chain of custody,
and is intended only for the use of the individual or company to whom it is addressed.

Date of Report: September 25, 2006
Samples Submitted: September 18, 2006
Laboratory Reference: 0609-131
Project: 663-010-008

HALOGENATED VOLATILES by EPA 8260B

Date Extracted: 9-20-06
Date Analyzed: 9-20-06

Matrix: Water
Units: ug/L (ppb)

Lab ID: 09-131-05
Client ID: MW2-091706

Compound	Results	Flags	PQL
Dichlorodifluoromethane	ND		2.0
Chloromethane	ND		10
Vinyl Chloride	ND		2.0
Bromomethane	ND		2.0
Chloroethane	ND		10
Trichlorofluoromethane	ND		2.0
1,1-Dichloroethene	ND		2.0
Iodomethane	ND		10
Methylene Chloride	ND		10
(trans) 1,2-Dichloroethene	ND		2.0
1,1-Dichloroethane	ND		2.0
2,2-Dichloropropane	ND		2.0
(cis) 1,2-Dichloroethene	ND		2.0
Bromochloromethane	ND		2.0
Chloroform	ND		2.0
1,1,1-Trichloroethane	ND		2.0
Carbon Tetrachloride	ND		2.0
1,1-Dichloropropene	ND		2.0
1,2-Dichloroethane	ND		2.0
Trichloroethene	ND		2.0
1,2-Dichloropropane	ND		2.0
Dibromomethane	ND		2.0
Bromodichloromethane	ND		2.0
2-Chloroethyl Vinyl Ether	ND		10
(cis) 1,3-Dichloropropene	ND		2.0
(trans) 1,3-Dichloropropene	ND		2.0

This report pertains to the samples analyzed in accordance with the chain of custody,
and is intended only for the use of the individual or company to whom it is addressed.

Date of Report: September 25, 2006
Samples Submitted: September 18, 2006
Laboratory Reference: 0609-131
Project: 663-010-008

HALOGENATED VOLATILES by EPA 8260B
page 2 of 2

Lab ID: 09-131-05
Client ID: MW2-091706

Compound	Results	Flags	PQL
1,1,2-Trichloroethane	ND		2.0
Tetrachloroethene	400		2.0
1,3-Dichloropropane	ND		2.0
Dibromochloromethane	ND		2.0
1,2-Dibromoethane	ND		2.0
Chlorobenzene	ND		2.0
1,1,1,2-Tetrachloroethane	ND		2.0
Bromoform	ND		10
Bromobenzene	ND		2.0
1,1,2,2-Tetrachloroethane	ND		2.0
1,2,3-Trichloropropane	ND		2.0
2-Chlorotoluene	ND		2.0
4-Chlorotoluene	ND		2.0
1,3-Dichlorobenzene	ND		2.0
1,4-Dichlorobenzene	ND		2.0
1,2-Dichlorobenzene	ND		2.0
1,2-Dibromo-3-chloropropane	ND		10
1,2,4-Trichlorobenzene	ND		2.0
Hexachlorobutadiene	ND		2.0
1,2,3-Trichlorobenzene	ND		2.0

Surrogate	Percent Recovery	Control Limits
Dibromofluoromethane	90	70-123
Toluene, d8	96	70-119
4-Bromofluorobenzene	93	70-119

This report pertains to the samples analyzed in accordance with the chain of custody,
and is intended only for the use of the individual or company to whom it is addressed.

Date of Report: September 25, 2006
Samples Submitted: September 18, 2006
Laboratory Reference: 0609-131
Project: 663-010-008

HALOGENATED VOLATILES by EPA 8260B

Date Extracted: 9-20-06
Date Analyzed: 9-20-06

Matrix: Water
Units: ug/L (ppb)

Lab ID: 09-131-06
Client ID: MW5-091706

Compound	Results	Flags	PQL
Dichlorodifluoromethane	ND		0.40
Chloromethane	ND		2.0
Vinyl Chloride	ND		0.40
Bromomethane	ND		0.40
Chloroethane	ND		2.0
Trichlorofluoromethane	ND		0.40
1,1-Dichloroethene	ND		0.40
Iodomethane	ND		2.0
Methylene Chloride	ND		2.0
(trans) 1,2-Dichloroethene	ND		0.40
1,1-Dichloroethane	ND		0.40
2,2-Dichloropropane	ND		0.40
(cis) 1,2-Dichloroethene	ND		0.40
Bromochloromethane	ND		0.40
Chloroform	ND		0.40
1,1,1-Trichloroethane	ND		0.40
Carbon Tetrachloride	ND		0.40
1,1-Dichloropropene	ND		0.40
1,2-Dichloroethane	ND		0.40
Trichloroethene	ND		0.40
1,2-Dichloropropane	ND		0.40
Dibromomethane	ND		0.40
Bromodichloromethane	ND		0.40
2-Chloroethyl Vinyl Ether	ND		2.0
(cis) 1,3-Dichloropropene	ND		0.40
(trans) 1,3-Dichloropropene	ND		0.40

This report pertains to the samples analyzed in accordance with the chain of custody,
and is intended only for the use of the individual or company to whom it is addressed.

Date of Report: September 25, 2006
Samples Submitted: September 18, 2006
Laboratory Reference: 0609-131
Project: 663-010-008

HALOGENATED VOLATILES by EPA 8260B
page 2 of 2

Lab ID: 09-131-06
Client ID: MW5-091706

Compound	Results	Flags	PQL
1,1,2-Trichloroethane	ND		0.40
Tetrachloroethene	74		0.40
1,3-Dichloropropane	ND		0.40
Dibromochloromethane	ND		0.40
1,2-Dibromoethane	ND		0.40
Chlorobenzene	ND		0.40
1,1,1,2-Tetrachloroethane	ND		0.40
Bromoform	ND		2.0
Bromobenzene	ND		0.40
1,1,2,2-Tetrachloroethane	ND		0.40
1,2,3-Trichloropropane	ND		0.40
2-Chlorotoluene	ND		0.40
4-Chlorotoluene	ND		0.40
1,3-Dichlorobenzene	ND		0.40
1,4-Dichlorobenzene	ND		0.40
1,2-Dichlorobenzene	ND		0.40
1,2-Dibromo-3-chloropropane	ND		2.0
1,2,4-Trichlorobenzene	ND		0.40
Hexachlorobutadiene	ND		0.40
1,2,3-Trichlorobenzene	ND		0.40

Surrogate	Percent Recovery	Control Limits
Dibromofluoromethane	98	70-123
Toluene, d8	96	70-119
4-Bromofluorobenzene	94	70-119

This report pertains to the samples analyzed in accordance with the chain of custody,
and is intended only for the use of the individual or company to whom it is addressed.

Date of Report: September 25, 2006
Samples Submitted: September 18, 2006
Laboratory Reference: 0609-131
Project: 663-010-008

HALOGENATED VOLATILES by EPA 8260B
METHOD BLANK QUALITY CONTROL
page 1 of 2

Date Extracted: 9-20-06
Date Analyzed: 9-20-06

Matrix: Water
Units: ug/L (ppb)

Lab ID: MB0920W1

Compound	Results	Flags	PQL
Dichlorodifluoromethane	ND		0.20
Chloromethane	ND		1.0
Vinyl Chloride	ND		0.20
Bromomethane	ND		0.20
Chloroethane	ND		1.0
Trichlorofluoromethane	ND		0.20
1,1-Dichloroethene	ND		0.20
Iodomethane	ND		1.0
Methylene Chloride	ND		1.0
(trans) 1,2-Dichloroethene	ND		0.20
1,1-Dichloroethane	ND		0.20
2,2-Dichloropropane	ND		0.20
(cis) 1,2-Dichloroethene	ND		0.20
Bromochloromethane	ND		0.20
Chloroform	ND		0.20
1,1,1-Trichloroethane	ND		0.20
Carbon Tetrachloride	ND		0.20
1,1-Dichloropropene	ND		0.20
1,2-Dichloroethane	ND		0.20
Trichloroethene	ND		0.20
1,2-Dichloropropane	ND		0.20
Dibromomethane	ND		0.20
Bromodichloromethane	ND		0.20
2-Chloroethyl Vinyl Ether	ND		1.0
(cis) 1,3-Dichloropropene	ND		0.20
(trans) 1,3-Dichloropropene	ND		0.20

This report pertains to the samples analyzed in accordance with the chain of custody,
and is intended only for the use of the individual or company to whom it is addressed.

Date of Report: September 25, 2006
Samples Submitted: September 18, 2006
Laboratory Reference: 0609-131
Project: 663-010-008

HALOGENATED VOLATILES by EPA 8260B
METHOD BLANK QUALITY CONTROL
page 2 of 2

Lab ID: MB0920W1

Compound	Results	Flags	PQL
1,1,2-Trichloroethane	ND		0.20
Tetrachloroethene	ND		0.20
1,3-Dichloropropane	ND		0.20
Dibromochloromethane	ND		0.20
1,2-Dibromoethane	ND		0.20
Chlorobenzene	ND		0.20
1,1,1,2-Tetrachloroethane	ND		0.20
Bromoform	ND		1.0
Bromobenzene	ND		0.20
1,1,2,2-Tetrachloroethane	ND		0.20
1,2,3-Trichloropropane	ND		0.20
2-Chlorotoluene	ND		0.20
4-Chlorotoluene	ND		0.20
1,3-Dichlorobenzene	ND		0.20
1,4-Dichlorobenzene	ND		0.20
1,2-Dichlorobenzene	ND		0.20
1,2-Dibromo-3-chloropropane	ND		1.0
1,2,4-Trichlorobenzene	ND		0.20
Hexachlorobutadiene	ND		0.20
1,2,3-Trichlorobenzene	ND		0.20

Surrogate	Percent Recovery	Control Limits
Dibromofluoromethane	93	70-123
Toluene, d8	95	70-119
4-Bromofluorobenzene	95	70-119

This report pertains to the samples analyzed in accordance with the chain of custody,
and is intended only for the use of the individual or company to whom it is addressed.

Date of Report: September 25, 2006
Samples Submitted: September 18, 2006
Laboratory Reference: 0609-131
Project: 663-010-008

HALOGENATED VOLATILES by EPA 8260B
SB/SBD QUALITY CONTROL

Date Extracted: 9-20-06
Date Analyzed: 9-20-06

Matrix: Water
Units: ug/L (ppb)

Lab ID: SB0920W1

Compound	Spike Amount	SB	Percent Recovery	SBD	Percent Recovery	Recovery Limits	Flags
1,1-Dichloroethene	10.0	10.1	101	9.42	94	70-130	
Benzene	10.0	11.6	116	11.1	111	70-130	
Trichloroethene	10.0	10.5	105	10.0	100	70-130	
Toluene	10.0	10.8	108	10.4	104	70-130	
Chlorobenzene	10.0	9.25	93	8.98	90	70-130	

	RPD	RPD Limit	Flags
1,1-Dichloroethene	7	17	
Benzene	5	13	
Trichloroethene	5	12	
Toluene	4	14	
Chlorobenzene	3	9	

This report pertains to the samples analyzed in accordance with the chain of custody,
and is intended only for the use of the individual or company to whom it is addressed.

OnSite Environmental Inc.

Data Qualifiers and Abbreviations

A - Due to a high sample concentration, the amount spiked is insufficient for meaningful MS/MSD recovery data.

B - The analyte indicated was also found in the blank sample.

C - The duplicate RPD is outside control limits due to high result variability when analyte concentrations are within five times the quantitation limit.

E - The value reported exceeds the quantitation range and is an estimate.

F - Surrogate recovery data is not available due to the high concentration of coeluting target compounds.

G - Insufficient sample quantity for duplicate analysis.

H - The analyte indicated is a common laboratory solvent and may have been introduced during sample preparation, and be impacting the sample result.

I - Compound recovery is outside of the control limits.

J - The value reported was below the practical quantitation limit. The value is an estimate.

K - Sample duplicate RPD is outside control limits due to sample inhomogeneity. The sample was re-extracted and re-analyzed with similar results.

L - The RPD is outside of the control limits.

M - Hydrocarbons in the gasoline range (toluene-napthalene) are present in the sample.

O - Hydrocarbons indicative of diesel fuel are present in the sample and are impacting the gasoline result.

P - The RPD of the detected concentrations between the two columns is greater than 40.

Q - Surrogate recovery is outside of the control limits.

S - Surrogate recovery data is not available due to the necessary dilution of the sample.

T - The sample chromatogram is not similar to a typical _____.

U - The analyte was analyzed for, but was not detected above the reported sample quantitation limit.

V - Matrix Spike/Matrix Spike Duplicate recoveries are outside control limits due to matrix effects.

W - Matrix Spike/Matrix Spike Duplicate RPD are outside control limits due to matrix effects.

X - Sample extract treated with a silica gel cleanup procedure.

Y - Sample extract treated with an acid/silica gel cleanup procedure.

Z -

ND - Not Detected at PQL
PQL - Practical Quantitation Limit
RPD - Relative Percent Difference

This report pertains to the samples analyzed in accordance with the chain of custody, and is intended only for the use of the individual or company to whom it is addressed.

Chain of Custody

Page 1 of 1

Kelcite Environmental Inc.
14648 NE 95th Street • Redmond, WA 98052
Phone: (425) 883-3881 • Fax: (425) 885-4603

Company: Farallon Consulting
Project Number: 643-010-008
Project Name: Allison's Norge Village
Project Manager: Carla Brock
Sampled by: BDG

Turnaround Request (in working days)
(Check One)

- ☐ Same Day
- ☐ 1 Day
- ☐ 2 Day
- ☐ 3 Day
- ☒ Standard (7 working days) (TPH analysis 5 working days)
- ☐ _____ (other)

Laboratory Number: 09-131

Requested Analysis

Sample Identification	Date Sampled	Time Sampled	Matrix	# Cont.	NWTPH-HCID	NWTPH-Gx/BTEX	NWTPH-Dx	Volatiles by 8260B	Halogenated Volatiles by 8260B	Semivolatiles by 8270C	PAHs by 8270C / SIM	PCBs by 8082	Pesticides by 8081A	Herbicides by 8151A	Total RCRA Metals (8)	TCLP Metals	HEM by 1664	VPH	EPH	% Moisture
1 MW-10-091606	9/16/06	16:30	H2O	3					X											
2 MW9-091606	↓	14:55	↓	↓					↓											
3 MW 11-091606	↓	18:20	↓	↓					↓											
4 MW 7-091706	9/17/06	09:10	↓	↓					↓											
5 MW 2-091706	↓	10:35	↓	↓					↓											
6 MW 5-091706	↓	11:40	↓	↓					↓											
		BDG																		

	Signature	Company	Date	Time
Relinquished by	(Brian D Gaston)	Farallon	9/16/06	16:45
Received by			9/18/06	1100
Relinquished by				
Received by				
Relinquished by				
Received by				
Reviewed by/Date		Reviewed by/Date		

Comments/Special Instructions:
e-mail results + edds (equis) to cbrock@farallonconsulting.com

☐ Chromatograms with final report

DISTRIBUTION LEGEND: White - Original Copy Yellow - Report Copy Pink - Client Copy

OnSite Environmental Inc.
14648 NE 95th Street, Redmond, WA 98052 • (425) 883-3881

September 15, 2006

Carla Brock
Farallon Consulting, LLC
320 3rd Avenue NE, Suite 200
Issaquah, WA 98027

Re: Analytical Data for Project 663-010
Laboratory Reference No. 0609-007B

Dear Carla:

Enclosed are the analytical results and associated quality control data for samples submitted on September 1, 2006.

The standard policy of OnSite Environmental Inc. is to store your samples for 30 days from the date of receipt. If you require longer storage, please contact the laboratory.

We appreciate the opportunity to be of service to you on this project. If you have any questions concerning the data, or need additional information, please feel free to call me.

Sincerely,

David Baumeister
Project Manager

Enclosures

This report pertains to the samples analyzed in accordance with the chain of custody, and is intended only for the use of the individual or company to whom it is addressed.

Date of Report: September 15, 2006
Samples Submitted: September 1, 2006
Laboratory Reference: 0609-007B
Project: 663-010

Case Narrative

Samples were collected on August 31, 2006 and received by the laboratory on September 1, 2006. They were maintained at the laboratory at a temperature of 2°C to 6°C except as noted below.

General QA/QC issues associated with the analytical data enclosed in this laboratory report will be indicated with a reference to a comment or explanation on the Data Qualifier page. More complex and involved QA/QC issues will be discussed in detail below.

Halogenated Volatiles EPA 8260B Analysis

Per EPA Method 5035A, samples were received by the laboratory in pre-weighed 40 mL VOA vials within 48 hours of sample collection. They were stored in a freezer at between -7°C and -20°C until extraction or analysis.

Any other QA/QC issues associated with this extraction and analysis will be indicated with a footnote reference and discussed in detail on the Data Qualifier page.

This report pertains to the samples analyzed in accordance with the chain of custody,
and is intended only for the use of the individual or company to whom it is addressed.

Date of Report: September 15, 2006
Samples Submitted: September 1, 2006
Laboratory Reference: 0609-007B
Project: 663-010

HALOGENATED VOLATILES by EPA 8260B
page 1 of 2

Date Extracted: 9-14-06
Date Analyzed: 9-14-06

Matrix: Soil
Units: mg/kg (ppm)

Lab ID: 09-007-06
Client ID: EB13-35-35.5

Compound	Results	Flags	PQL
Dichlorodifluoromethane	ND		0.0010
Chloromethane	ND		0.0038
Vinyl Chloride	ND		0.0010
Bromomethane	ND		0.0010
Chloroethane	ND		0.0038
Trichlorofluoromethane	ND		0.0010
1,1-Dichloroethene	ND		0.0010
Iodomethane	ND		0.0038
Methylene Chloride	0.0067	H	0.0038
(trans) 1,2-Dichloroethene	ND		0.0010
1,1-Dichloroethane	ND		0.0010
2,2-Dichloropropane	ND		0.0010
(cis) 1,2-Dichloroethene	ND		0.0010
Bromochloromethane	ND		0.0010
Chloroform	ND		0.0010
1,1,1-Trichloroethane	ND		0.0010
Carbon Tetrachloride	ND		0.0010
1,1-Dichloropropene	ND		0.0010
1,2-Dichloroethane	ND		0.0010
Trichloroethene	ND		0.0010
1,2-Dichloropropane	ND		0.0010
Dibromomethane	ND		0.0010
Bromodichloromethane	ND		0.0010
2-Chloroethyl Vinyl Ether	ND		0.0038
(cis) 1,3-Dichloropropene	ND		0.0010
(trans) 1,3-Dichloropropene	ND		0.0010

This report pertains to the samples analyzed in accordance with the chain of custody,
and is intended only for the use of the individual or company to whom it is addressed.

Date of Report: September 15, 2006
Samples Submitted: September 1, 2006
Laboratory Reference: 0609-007B
Project: 663-010

HALOGENATED VOLATILES by EPA 8260B
page 2 of 2

Lab ID: 09-007-06
Client ID: EB13-35-35.5

Compound	**Results**	**Flags**	**PQL**
1,1,2-Trichloroethane	ND		0.0010
Tetrachloroethene	0.16		0.035
1,3-Dichloropropane	ND		0.0010
Dibromochloromethane	ND		0.0010
1,2-Dibromoethane	ND		0.0010
Chlorobenzene	ND		0.0010
1,1,1,2-Tetrachloroethane	ND		0.0010
Bromoform	ND		0.0010
Bromobenzene	ND		0.0010
1,1,2,2-Tetrachloroethane	ND		0.0010
1,2,3-Trichloropropane	ND		0.0010
2-Chlorotoluene	ND		0.0010
4-Chlorotoluene	ND		0.0010
1,3-Dichlorobenzene	ND		0.0010
1,4-Dichlorobenzene	ND		0.0010
1,2-Dichlorobenzene	ND		0.0010
1,2-Dibromo-3-chloropropane	ND		0.0038
1,2,4-Trichlorobenzene	ND		0.0010
Hexachlorobutadiene	ND		0.0038
1,2,3-Trichlorobenzene	ND		0.0010

Surrogate	**Percent Recovery**	**Control Limits**
Dibromofluoromethane	82	71-126
Toluene, d8	92	73-130
4-Bromofluorobenzene	96	70-130

This report pertains to the samples analyzed in accordance with the chain of custody,
and is intended only for the use of the individual or company to whom it is addressed.

Date of Report: September 15, 2006
Samples Submitted: September 1, 2006
Laboratory Reference: 0609-007B
Project: 663-010

HALOGENATED VOLATILES by EPA 8260B
METHOD BLANK QUALITY CONTROL
page 1 of 2

Date Extracted: 9-14-06
Date Analyzed: 9-14-06

Matrix: Soil
Units: mg/kg (ppm)

Lab ID: MB0914S1

Compound	Results	Flags	PQL
Dichlorodifluoromethane	ND		0.0010
Chloromethane	ND		0.0050
Vinyl Chloride	ND		0.0010
Bromomethane	ND		0.0010
Chloroethane	ND		0.0050
Trichlorofluoromethane	ND		0.0010
1,1-Dichloroethene	ND		0.0010
Iodomethane	ND		0.0050
Methylene Chloride	ND		0.0050
(trans) 1,2-Dichloroethene	ND		0.0010
1,1-Dichloroethane	ND		0.0010
2,2-Dichloropropane	ND		0.0010
(cis) 1,2-Dichloroethene	ND		0.0010
Bromochloromethane	ND		0.0010
Chloroform	ND		0.0010
1,1,1-Trichloroethane	ND		0.0010
Carbon Tetrachloride	ND		0.0010
1,1-Dichloropropene	ND		0.0010
1,2-Dichloroethane	ND		0.0010
Trichloroethene	ND		0.0010
1,2-Dichloropropane	ND		0.0010
Dibromomethane	ND		0.0010
Bromodichloromethane	ND		0.0010
2-Chloroethyl Vinyl Ether	ND		0.0050
(cis) 1,3-Dichloropropene	ND		0.0010
(trans) 1,3-Dichloropropene	ND		0.0010

This report pertains to the samples analyzed in accordance with the chain of custody,
and is intended only for the use of the individual or company to whom it is addressed.

Date of Report: September 15, 2006
Samples Submitted: September 1, 2006
Laboratory Reference: 0609-007B
Project: 663-010

HALOGENATED VOLATILES by EPA 8260B
METHOD BLANK QUALITY CONTROL
page 2 of 2

Lab ID: MB0914S1

Compound	Results	Flags	PQL
1,1,2-Trichloroethane	ND		0.0010
Tetrachloroethene	ND		0.0010
1,3-Dichloropropane	ND		0.0010
Dibromochloromethane	ND		0.0010
1,2-Dibromoethane	ND		0.0010
Chlorobenzene	ND		0.0010
1,1,1,2-Tetrachloroethane	ND		0.0010
Bromoform	ND		0.0010
Bromobenzene	ND		0.0010
1,1,2,2-Tetrachloroethane	ND		0.0010
1,2,3-Trichloropropane	ND		0.0010
2-Chlorotoluene	ND		0.0010
4-Chlorotoluene	ND		0.0010
1,3-Dichlorobenzene	ND		0.0010
1,4-Dichlorobenzene	ND		0.0010
1,2-Dichlorobenzene	ND		0.0010
1,2-Dibromo-3-chloropropane	ND		0.0050
1,2,4-Trichlorobenzene	ND		0.0010
Hexachlorobutadiene	ND		0.0050
1,2,3-Trichlorobenzene	ND		0.0010

Surrogate	Percent Recovery	Control Limits
Dibromofluoromethane	82	71-126
Toluene, d8	98	73-130
4-Bromofluorobenzene	101	70-130

This report pertains to the samples analyzed in accordance with the chain of custody,
and is intended only for the use of the individual or company to whom it is addressed.

Date of Report: September 15, 2006
Samples Submitted: September 1, 2006
Laboratory Reference: 0609-007B
Project: 663-010

HALOGENATED VOLATILES by EPA 8260B
SB/SBD QUALITY CONTROL

Date Extracted: 9-14-06
Date Analyzed: 9-14-06

Matrix: Soil
Units: mg/kg (ppm)

Lab ID: SB0914S1

Compound	Spike Amount	SB	Percent Recovery	SBD	Percent Recovery	Recovery Limits	Flags
1,1-Dichloroethene	0.0500	0.0524	105	0.0559	112	70-130	
Benzene	0.0500	0.0466	93	0.0489	98	70-130	
Trichloroethene	0.0500	0.0459	92	0.0477	95	70-130	
Toluene	0.0500	0.0542	108	0.0523	105	70-130	
Chlorobenzene	0.0500	0.0472	94	0.0473	95	70-130	

	RPD	RPD Limit	Flags
1,1-Dichloroethene	6	11	
Benzene	5	11	
Trichloroethene	4	13	
Toluene	4	11	
Chlorobenzene	0	12	

This report pertains to the samples analyzed in accordance with the chain of custody,
and is intended only for the use of the individual or company to whom it is addressed.

Date of Report: September 15, 2006
Samples Submitted: September 1, 2006
Laboratory Reference: 0609-007B
Project: 663-010

% MOISTURE

Date Analyzed: 9-14-06

Client ID	Lab ID	% Moisture
EB13-35-35.5	09-007-06	14

This report pertains to the samples analyzed in accordance with the chain of custody,
and is intended only for the use of the individual or company to whom it is addressed.

OnSite Environmental Inc.

Data Qualifiers and Abbreviations

A - Due to a high sample concentration, the amount spiked is insufficient for meaningful MS/MSD recovery data.

B - The analyte indicated was also found in the blank sample.

C - The duplicate RPD is outside control limits due to high result variability when analyte concentrations are within five times the quantitation limit.

E - The value reported exceeds the quantitation range and is an estimate.

F - Surrogate recovery data is not available due to the high concentration of coeluting target compounds.

G - Insufficient sample quantity for duplicate analysis.

H - The analyte indicated is a common laboratory solvent and may have been introduced during sample preparation, and be impacting the sample result.

I - Compound recovery is outside of the control limits.

J - The value reported was below the practical quantitation limit. The value is an estimate.

K - Sample duplicate RPD is outside control limits due to sample inhomogeneity. The sample was re-extracted and re-analyzed with similar results.

L - The RPD is outside of the control limits.

M - Hydrocarbons in the gasoline range (toluene-napthalene) are present in the sample.

O - Hydrocarbons indicative of diesel fuel are present in the sample and are impacting the gasoline result.

P - The RPD of the detected concentrations between the two columns is greater than 40.

Q - Surrogate recovery is outside of the control limits.

S - Surrogate recovery data is not available due to the necessary dilution of the sample.

T - The sample chromatogram is not similar to a typical _____.

U - The analyte was analyzed for, but was not detected above the reported sample quantitation limit.

V - Matrix Spike/Matrix Spike Duplicate recoveries are outside control limits due to matrix effects.

W - Matrix Spike/Matrix Spike Duplicate RPD are outside control limits due to matrix effects.

X - Sample extract treated with a silica gel cleanup procedure.

Y - Sample extract treated with an acid/silica gel cleanup procedure.

Z -

ND - Not Detected at PQL
PQL - Practical Quantitation Limit
RPD - Relative Percent Difference

This report pertains to the samples analyzed in accordance with the chain of custody, and is intended only for the use of the individual or company to whom it is addressed.

Chain of Custody

Environmental Inc.
[redacted] NE 95th Street • Redmond, WA 98052
Phone: (425) 883-3881 • Fax: (425) 885-4603

Laboratory Number: 09-007

Company: FARALLON
Project Number: 1663-010
Project Name: JACKSON'S NORDIC VILLAGE
Project Manager: CARLA BROOK
Sampled by: J. SCHMITT

Turnaround Request (in working days)

(Check One)

- ☐ Same Day
- ☐ 1 Day
- ☐ 2 Day
- ☐ 3 Day
- ☒ Standard (7 working days) (TPH analysis 5 working days)
- ☐ _____ (other)

Requested Analysis

Lab ID	Sample Identification	Date Sampled	Time Sampled	Matrix	# of Cont	NWTPH-HCID	NWTPH-Gx/BTEX	NWTPH-Dx	Volatiles by 8260B	Halogenated Volatiles by 8260B	Semivolatiles by 8270C	PAHs by 8270C / SIM	PCBs by 8082	Pesticides by 8081A	Herbicides by 8151A	Total RCRA Metals (8)	TCLP Metals	HEM by 1664	VPH	EPH				% Moisture
1	EB13-5-5.5	8/31/06	0930	S	4					⊗														⊗
2	EB13-10-11.5		0934																					
3	EB13-15-16.5		0936																					⊗
4	EB13-20-21		0940							⊗														
5	EB13-25-26		0950																					
6	EB13-35-35.5		1000							O														O
7	EB13-39-40		1012																					
8	EB12-5-6.5		1105							⊗														⊗
9	EB12-10-11.5		1109																					
10	EB12-15-16		1114							⊗														⊗

	Signature	Company	Date	Time
Relinquished by		FARALLON	9/01/06	1435
Received by				1435
Relinquished by				
Received by				
Relinquished by				
Received by				
Reviewed by/Date		Reviewed by/Date		

Comments/Special Instructions:

⊗ Added 9/5/06. DTB
O Added 9/13/06. DTB.

Chromatograms with final report ☐

DISTRIBUTION LEGEND: White - OnSite Copy, Yellow - Report Copy, Pink - Client Copy

Chain of Custody

Pacific Environmental Inc.
14648 NE 95th Street • Redmond, WA 98052
Phone: (425) 883-3881 • Fax: (425) 885-4603

Company: FARALLON
Project Number: 663-010
Project Name: ANNISO & NORTH VILLAGE
Project Manager: CURTIS BROCK
Sampled by: J. SCHMITT

Turnaround Request (in working days)

(Check One)

- ☐ Same Day
- ☐ 1 Day
- ☐ 2 Day
- ☐ 3 Day
- ☒ Standard (7 working days) (TPH analysis 5 working days)
- ☐ _____ (other)

Laboratory Number: 09-007

Lab No.	Sample Identification	Sample Collection Date	Sample Collection Time	Sample Matrix	Number of Containers	NWTPH-HCID	NWTPH-Gx/BTEX	NWTPH-Dx	Volatiles by 8260B	Halogenated Volatiles by 8260B	Semivolatiles by 8270C	PAHs by 8270C / SIM	PCBs by 8082	Pesticides by 8081A	Herbicides by 8151A	Total RCRA Metals (8)	TCLP Metals	HEM by 1664	VPH	EPH	% Moisture
11	EB12-20-21.5	8/31/06	1120	S	4																
12	EB12-25-25.5		1126																		⊗
13	EB12-30-30.5		1130						⊗												
14	EB12-40-40.5		1158																		⊗
15	EB14-5-6.5		1340						⊗												
16	EB14-10-11		1348																		⊗
17	EB14-15-16.5		1356						⊗												
18	EB14-20-21.5		1406																		⊗
19	EB14-25-25.5		1436																		
20	EB14-RGW-25		1430	W	4					⊗											⊗ NO DB

	Signature	Company	Date	Time
Relinquished by		Farallon	9/1/06	1435
Received by		OSE	9/1/06	1435
Relinquished by				
Received by				
Relinquished by				
Received by				
Reviewed by/Date		Reviewed by/Date		

Comments/Special Instructions:
⊗ Added 9/5/06. DB

Chromatograms with final report ☐

DISTRIBUTION LEGEND: White - OnSite Copy Yellow - Report Copy Pink - Client Copy

OnSite Environmental Inc.
14648 NE 95th Street, Redmond, WA 98052 • (425) 883-3881

September 12, 2006

Carla Brock
Farallon Consulting, LLC
320 3rd Avenue NE, Suite 200
Issaquah, WA 98027

Re: Analytical Data for Project 663-010
Laboratory Reference No. 0609-007

Dear Carla:

Enclosed are the analytical results and associated quality control data for samples submitted on September 1, 2006.

The standard policy of OnSite Environmental Inc. is to store your samples for 30 days from the date of receipt. If you require longer storage, please contact the laboratory.

We appreciate the opportunity to be of service to you on this project. If you have any questions concerning the data, or need additional information, please feel free to call me.

Sincerely,

David Baumeister
Project Manager

Enclosures

This report pertains to the samples analyzed in accordance with the chain of custody, and is intended only for the use of the individual or company to whom it is addressed.

Date of Report: September 12, 2006
Samples Submitted: September 1, 2006
Laboratory Reference: 0609-007
Project: 663-010

Case Narrative

Samples were collected on August 31, 2006 and received by the laboratory on September 1, 2006. They were maintained at the laboratory at a temperature of 2°C to 6°C except as noted below.

General QA/QC issues associated with the analytical data enclosed in this laboratory report will be indicated with a reference to a comment or explanation on the Data Qualifier page. More complex and involved QA/QC issues will be discussed in detail below.

Halogenated Volatiles EPA 8260B Analysis

Per EPA Method 5035A, samples were received by the laboratory in pre-weighed 40 mL VOA vials within 48 hours of sample collection. They were stored in a freezer at between -7°C and -20°C until extraction or analysis.

Any other QA/QC issues associated with this extraction and analysis will be indicated with a footnote reference and discussed in detail on the Data Qualifier page.

This report pertains to the samples analyzed in accordance with the chain of custody,
and is intended only for the use of the individual or company to whom it is addressed.

Date of Report: September 12, 2006
Samples Submitted: September 1, 2006
Laboratory Reference: 0609-007
Project: 663-010

HALOGENATED VOLATILES by EPA 8260B

Date Extracted: 9-5-06
Date Analyzed: 9-5-06

Matrix: Soil
Units: mg/kg (ppm)

Lab ID: 09-007-01
Client ID: EB13-5-5.5

Compound	Results	Flags	PQL
Dichlorodifluoromethane	ND		0.0013
Chloromethane	ND		0.0013
Vinyl Chloride	ND		0.0013
Bromomethane	ND		0.0013
Chloroethane	ND		0.0064
Trichlorofluoromethane	0.0051		0.0013
1,1-Dichloroethene	ND		0.0013
Iodomethane	ND		0.0064
Methylene Chloride	ND		0.0064
(trans) 1,2-Dichloroethene	ND		0.0013
1,1-Dichloroethane	ND		0.0013
2,2-Dichloropropane	ND		0.0013
(cis) 1,2-Dichloroethene	ND		0.0013
Bromochloromethane	ND		0.0013
Chloroform	ND		0.0013
1,1,1-Trichloroethane	ND		0.0013
Carbon Tetrachloride	ND		0.0013
1,1-Dichloropropene	ND		0.0013
1,2-Dichloroethane	ND		0.0013
Trichloroethene	ND		0.0013
1,2-Dichloropropane	ND		0.0013
Dibromomethane	ND		0.0013
Bromodichloromethane	ND		0.0013
2-Chloroethyl Vinyl Ether	ND		0.0064
(cis) 1,3-Dichloropropene	ND		0.0013
(trans) 1,3-Dichloropropene	ND		0.0013

This report pertains to the samples analyzed in accordance with the chain of custody,
and is intended only for the use of the individual or company to whom it is addressed.

Date of Report: September 12, 2006
Samples Submitted: September 1, 2006
Laboratory Reference: 0609-007
Project: 663-010

HALOGENATED VOLATILES by EPA 8260B
page 2 of 2

Lab ID: 09-007-01
Client ID: EB13-5-5.5

Compound	**Results**	**Flags**	**PQL**
1,1,2-Trichloroethane	ND		0.0013
Tetrachloroethene	0.087		0.0013
1,3-Dichloropropane	ND		0.0013
Dibromochloromethane	ND		0.0013
1,2-Dibromoethane	ND		0.0013
Chlorobenzene	ND		0.0013
1,1,1,2-Tetrachloroethane	ND		0.0013
Bromoform	ND		0.0013
Bromobenzene	ND		0.0013
1,1,2,2-Tetrachloroethane	ND		0.0013
1,2,3-Trichloropropane	ND		0.0013
2-Chlorotoluene	ND		0.0013
4-Chlorotoluene	ND		0.0013
1,3-Dichlorobenzene	ND		0.0013
1,4-Dichlorobenzene	ND		0.0013
1,2-Dichlorobenzene	ND		0.0013
1,2-Dibromo-3-chloropropane	ND		0.0064
1,2,4-Trichlorobenzene	ND		0.0013
Hexachlorobutadiene	ND		0.0064
1,2,3-Trichlorobenzene	ND		0.0013

Surrogate	**Percent Recovery**	**Control Limits**
Dibromofluoromethane	105	71-126
Toluene, d8	98	73-130
4-Bromofluorobenzene	100	70-130

This report pertains to the samples analyzed in accordance with the chain of custody,
and is intended only for the use of the individual or company to whom it is addressed.

Date of Report: September 12, 2006
Samples Submitted: September 1, 2006
Laboratory Reference: 0609-007
Project: 663-010

HALOGENATED VOLATILES by EPA 8260B

Date Extracted: 9-6-06
Date Analyzed: 9-6-06

Matrix: Soil
Units: mg/kg (ppm)

Lab ID: 09-007-04
Client ID: EB13-20-21

Compound	Results	Flags	PQL
Dichlorodifluoromethane	ND		0.0010
Chloromethane	ND		0.0010
Vinyl Chloride	ND		0.0010
Bromomethane	ND		0.0010
Chloroethane	ND		0.0039
Trichlorofluoromethane	ND		0.0010
1,1-Dichloroethene	ND		0.0010
Iodomethane	ND		0.0039
Methylene Chloride	ND		0.0039
(trans) 1,2-Dichloroethene	ND		0.0010
1,1-Dichloroethane	ND		0.0010
2,2-Dichloropropane	ND		0.0010
(cis) 1,2-Dichloroethene	ND		0.0010
Bromochloromethane	ND		0.0010
Chloroform	ND		0.0010
1,1,1-Trichloroethane	ND		0.0010
Carbon Tetrachloride	ND		0.0010
1,1-Dichloropropene	ND		0.0010
1,2-Dichloroethane	ND		0.0010
Trichloroethene	ND		0.0010
1,2-Dichloropropane	ND		0.0010
Dibromomethane	ND		0.0010
Bromodichloromethane	ND		0.0010
2-Chloroethyl Vinyl Ether	ND		0.0039
(cis) 1,3-Dichloropropene	ND		0.0010
(trans) 1,3-Dichloropropene	ND		0.0010

This report pertains to the samples analyzed in accordance with the chain of custody,
and is intended only for the use of the individual or company to whom it is addressed.

Date of Report: September 12, 2006
Samples Submitted: September 1, 2006
Laboratory Reference: 0609-007
Project: 663-010

HALOGENATED VOLATILES by EPA 8260B
page 2 of 2

Lab ID: 09-007-04
Client ID: EB13-20-21

Compound	Results	Flags	PQL
1,1,2-Trichloroethane	ND		0.0010
Tetrachloroethene	0.15		0.0010
1,3-Dichloropropane	ND		0.0010
Dibromochloromethane	ND		0.0010
1,2-Dibromoethane	ND		0.0010
Chlorobenzene	ND		0.0010
1,1,1,2-Tetrachloroethane	ND		0.0010
Bromoform	ND		0.0010
Bromobenzene	ND		0.0010
1,1,2,2-Tetrachloroethane	ND		0.0010
1,2,3-Trichloropropane	ND		0.0010
2-Chlorotoluene	ND		0.0010
4-Chlorotoluene	ND		0.0010
1,3-Dichlorobenzene	ND		0.0010
1,4-Dichlorobenzene	ND		0.0010
1,2-Dichlorobenzene	ND		0.0010
1,2-Dibromo-3-chloropropane	ND		0.0039
1,2,4-Trichlorobenzene	ND		0.0010
Hexachlorobutadiene	ND		0.0039
1,2,3-Trichlorobenzene	ND		0.0010

Surrogate	Percent Recovery	Control Limits
Dibromofluoromethane	103	71-126
Toluene, d8	96	73-130
4-Bromofluorobenzene	113	70-130

This report pertains to the samples analyzed in accordance with the chain of custody,
and is intended only for the use of the individual or company to whom it is addressed.

Date of Report: September 12, 2006
Samples Submitted: September 1, 2006
Laboratory Reference: 0609-007
Project: 663-010

HALOGENATED VOLATILES by EPA 8260B
page 1 of 2

Date Extracted: 9-5-06
Date Analyzed: 9-5-06

Matrix: Soil
Units: mg/kg (ppm)

Lab ID: 09-007-08
Client ID: EB12-5-6.5

Compound	Results	Flags	PQL
Dichlorodifluoromethane	ND		0.0010
Chloromethane	ND		0.0010
Vinyl Chloride	ND		0.0010
Bromomethane	ND		0.0010
Chloroethane	ND		0.0044
Trichlorofluoromethane	0.0028		0.0010
1,1-Dichloroethene	ND		0.0010
Iodomethane	ND		0.0044
Methylene Chloride	ND		0.0044
(trans) 1,2-Dichloroethene	ND		0.0010
1,1-Dichloroethane	ND		0.0010
2,2-Dichloropropane	ND		0.0010
(cis) 1,2-Dichloroethene	ND		0.0010
Bromochloromethane	ND		0.0010
Chloroform	ND		0.0010
1,1,1-Trichloroethane	ND		0.0010
Carbon Tetrachloride	ND		0.0010
1,1-Dichloropropene	ND		0.0010
1,2-Dichloroethane	ND		0.0010
Trichloroethene	ND		0.0010
1,2-Dichloropropane	ND		0.0010
Dibromomethane	ND		0.0010
Bromodichloromethane	ND		0.0010
2-Chloroethyl Vinyl Ether	ND		0.0044
(cis) 1,3-Dichloropropene	ND		0.0010
(trans) 1,3-Dichloropropene	ND		0.0010

This report pertains to the samples analyzed in accordance with the chain of custody,
and is intended only for the use of the individual or company to whom it is addressed.

Date of Report: September 12, 2006
Samples Submitted: September 1, 2006
Laboratory Reference: 0609-007
Project: 663-010

HALOGENATED VOLATILES by EPA 8260B
page 2 of 2

Lab ID: 09-007-08
Client ID: EB12-5-6.5

Compound	**Results**	**Flags**	**PQL**
1,1,2-Trichloroethane	ND		0.0010
Tetrachloroethene	0.014		0.0010
1,3-Dichloropropane	ND		0.0010
Dibromochloromethane	ND		0.0010
1,2-Dibromoethane	ND		0.0010
Chlorobenzene	ND		0.0010
1,1,1,2-Tetrachloroethane	ND		0.0010
Bromoform	ND		0.0010
Bromobenzene	ND		0.0010
1,1,2,2-Tetrachloroethane	ND		0.0010
1,2,3-Trichloropropane	ND		0.0010
2-Chlorotoluene	ND		0.0010
4-Chlorotoluene	ND		0.0010
1,3-Dichlorobenzene	ND		0.0010
1,4-Dichlorobenzene	ND		0.0010
1,2-Dichlorobenzene	ND		0.0010
1,2-Dibromo-3-chloropropane	ND		0.0044
1,2,4-Trichlorobenzene	ND		0.0010
Hexachlorobutadiene	ND		0.0044
1,2,3-Trichlorobenzene	ND		0.0010

Surrogate	**Percent Recovery**	**Control Limits**
Dibromofluoromethane	96	71-126
Toluene, d8	96	73-130
4-Bromofluorobenzene	99	70-130

This report pertains to the samples analyzed in accordance with the chain of custody,
and is intended only for the use of the individual or company to whom it is addressed.

Date of Report: September 12, 2006
Samples Submitted: September 1, 2006
Laboratory Reference: 0609-007
Project: 663-010

HALOGENATED VOLATILES by EPA 8260B

Date Extracted: 9-5&6-06
Date Analyzed: 9-5&6-06

Matrix: Soil
Units: mg/kg (ppm)

Lab ID: 09-007-10
Client ID: EB12-15-16

Compound	Results	Flags	PQL
Dichlorodifluoromethane	ND		0.0010
Chloromethane	ND		0.0010
Vinyl Chloride	ND		0.0010
Bromomethane	ND		0.0010
Chloroethane	ND		0.0040
Trichlorofluoromethane	ND		0.0010
1,1-Dichloroethene	ND		0.0010
Iodomethane	ND		0.0040
Methylene Chloride	ND		0.0040
(trans) 1,2-Dichloroethene	ND		0.0010
1,1-Dichloroethane	ND		0.0010
2,2-Dichloropropane	ND		0.0010
(cis) 1,2-Dichloroethene	ND		0.0010
Bromochloromethane	ND		0.0010
Chloroform	ND		0.0010
1,1,1-Trichloroethane	ND		0.0010
Carbon Tetrachloride	ND		0.0010
1,1-Dichloropropene	ND		0.0010
1,2-Dichloroethane	ND		0.0010
Trichloroethene	ND		0.0010
1,2-Dichloropropane	ND		0.0010
Dibromomethane	ND		0.0010
Bromodichloromethane	ND		0.0010
2-Chloroethyl Vinyl Ether	ND		0.0040
(cis) 1,3-Dichloropropene	ND		0.0010
(trans) 1,3-Dichloropropene	ND		0.0010

This report pertains to the samples analyzed in accordance with the chain of custody,
and is intended only for the use of the individual or company to whom it is addressed.

Date of Report: September 12, 2006
Samples Submitted: September 1, 2006
Laboratory Reference: 0609-007
Project: 663-010

HALOGENATED VOLATILES by EPA 8260B
page 2 of 2

Lab ID: 09-007-10
Client ID: EB12-15-16

Compound	Results	Flags	PQL
1,1,2-Trichloroethane	ND		0.0010
Tetrachloroethene	0.12		0.041
1,3-Dichloropropane	ND		0.0010
Dibromochloromethane	ND		0.0010
1,2-Dibromoethane	ND		0.0010
Chlorobenzene	ND		0.0010
1,1,1,2-Tetrachloroethane	ND		0.0010
Bromoform	ND		0.0010
Bromobenzene	ND		0.0010
1,1,2,2-Tetrachloroethane	ND		0.0010
1,2,3-Trichloropropane	ND		0.0010
2-Chlorotoluene	ND		0.0010
4-Chlorotoluene	ND		0.0010
1,3-Dichlorobenzene	ND		0.0010
1,4-Dichlorobenzene	ND		0.0010
1,2-Dichlorobenzene	ND		0.0010
1,2-Dibromo-3-chloropropane	ND		0.0040
1,2,4-Trichlorobenzene	ND		0.0010
Hexachlorobutadiene	ND		0.0040
1,2,3-Trichlorobenzene	ND		0.0010

Surrogate	Percent Recovery	Control Limits
Dibromofluoromethane	106	71-126
Toluene, d8	113	73-130
4-Bromofluorobenzene	106	70-130

This report pertains to the samples analyzed in accordance with the chain of custody,
and is intended only for the use of the individual or company to whom it is addressed.

Date of Report: September 12, 2006
Samples Submitted: September 1, 2006
Laboratory Reference: 0609-007
Project: 663-010

HALOGENATED VOLATILES by EPA 8260B

Date Extracted: 9-5-06
Date Analyzed: 9-5-06

Matrix: Soil
Units: mg/kg (ppm)

Lab ID: 09-007-13
Client ID: EB12-30-30.5

Compound	Results	Flags	PQL
Dichlorodifluoromethane	ND		0.0010
Chloromethane	ND		0.0010
Vinyl Chloride	ND		0.0010
Bromomethane	ND		0.0010
Chloroethane	ND		0.0038
Trichlorofluoromethane	0.0023		0.0010
1,1-Dichloroethene	ND		0.0010
Iodomethane	ND		0.0038
Methylene Chloride	ND		0.0038
(trans) 1,2-Dichloroethene	ND		0.0010
1,1-Dichloroethane	ND		0.0010
2,2-Dichloropropane	ND		0.0010
(cis) 1,2-Dichloroethene	ND		0.0010
Bromochloromethane	ND		0.0010
Chloroform	ND		0.0010
1,1,1-Trichloroethane	ND		0.0010
Carbon Tetrachloride	ND		0.0010
1,1-Dichloropropene	ND		0.0010
1,2-Dichloroethane	ND		0.0010
Trichloroethene	ND		0.0010
1,2-Dichloropropane	ND		0.0010
Dibromomethane	ND		0.0010
Bromodichloromethane	ND		0.0010
2-Chloroethyl Vinyl Ether	ND		0.0038
(cis) 1,3-Dichloropropene	ND		0.0010
(trans) 1,3-Dichloropropene	ND		0.0010

This report pertains to the samples analyzed in accordance with the chain of custody,
and is intended only for the use of the individual or company to whom it is addressed.

Date of Report: September 12, 2006
Samples Submitted: September 1, 2006
Laboratory Reference: 0609-007
Project: 663-010

HALOGENATED VOLATILES by EPA 8260B
page 2 of 2

Lab ID: 09-007-13
Client ID: EB12-30-30.5

Compound	Results	Flags	PQL
1,1,2-Trichloroethane	ND		0.0010
Tetrachloroethene	0.047		0.0010
1,3-Dichloropropane	ND		0.0010
Dibromochloromethane	ND		0.0010
1,2-Dibromoethane	ND		0.0010
Chlorobenzene	ND		0.0010
1,1,1,2-Tetrachloroethane	ND		0.0010
Bromoform	ND		0.0010
Bromobenzene	ND		0.0010
1,1,2,2-Tetrachloroethane	ND		0.0010
1,2,3-Trichloropropane	ND		0.0010
2-Chlorotoluene	ND		0.0010
4-Chlorotoluene	ND		0.0010
1,3-Dichlorobenzene	ND		0.0010
1,4-Dichlorobenzene	ND		0.0010
1,2-Dichlorobenzene	ND		0.0010
1,2-Dibromo-3-chloropropane	ND		0.0038
1,2,4-Trichlorobenzene	ND		0.0010
Hexachlorobutadiene	ND		0.0038
1,2,3-Trichlorobenzene	ND		0.0010

Surrogate	Percent Recovery	Control Limits
Dibromofluoromethane	96	71-126
Toluene, d8	94	73-130
4-Bromofluorobenzene	101	70-130

This report pertains to the samples analyzed in accordance with the chain of custody,
and is intended only for the use of the individual or company to whom it is addressed.

Date of Report: September 12, 2006
Samples Submitted: September 1, 2006
Laboratory Reference: 0609-007
Project: 663-010

HALOGENATED VOLATILES by EPA 8260B

Date Extracted: 9-5-06
Date Analyzed: 9-5-06

Matrix: Soil
Units: mg/kg (ppm)

Lab ID: 09-007-15
Client ID: EB14-5-6.5

Compound	Results	Flags	PQL
Dichlorodifluoromethane	ND		0.0010
Chloromethane	ND		0.0010
Vinyl Chloride	ND		0.0010
Bromomethane	ND		0.0010
Chloroethane	ND		0.0037
Trichlorofluoromethane	ND		0.0010
1,1-Dichloroethene	ND		0.0010
Iodomethane	ND		0.0037
Methylene Chloride	ND		0.0037
(trans) 1,2-Dichloroethene	ND		0.0010
1,1-Dichloroethane	ND		0.0010
2,2-Dichloropropane	ND		0.0010
(cis) 1,2-Dichloroethene	ND		0.0010
Bromochloromethane	ND		0.0010
Chloroform	ND		0.0010
1,1,1-Trichloroethane	ND		0.0010
Carbon Tetrachloride	ND		0.0010
1,1-Dichloropropene	ND		0.0010
1,2-Dichloroethane	ND		0.0010
Trichloroethene	ND		0.0010
1,2-Dichloropropane	ND		0.0010
Dibromomethane	ND		0.0010
Bromodichloromethane	ND		0.0010
2-Chloroethyl Vinyl Ether	ND		0.0037
(cis) 1,3-Dichloropropene	ND		0.0010
(trans) 1,3-Dichloropropene	ND		0.0010

This report pertains to the samples analyzed in accordance with the chain of custody,
and is intended only for the use of the individual or company to whom it is addressed.

Date of Report: September 12, 2006
Samples Submitted: September 1, 2006
Laboratory Reference: 0609-007
Project: 663-010

HALOGENATED VOLATILES by EPA 8260B
page 2 of 2

Lab ID: 09-007-15
Client ID: EB14-5-6.5

Compound	Results	Flags	PQL
1,1,2-Trichloroethane	ND		0.0010
Tetrachloroethene	0.0083		0.0010
1,3-Dichloropropane	ND		0.0010
Dibromochloromethane	ND		0.0010
1,2-Dibromoethane	ND		0.0010
Chlorobenzene	ND		0.0010
1,1,1,2-Tetrachloroethane	ND		0.0010
Bromoform	ND		0.0010
Bromobenzene	ND		0.0010
1,1,2,2-Tetrachloroethane	ND		0.0010
1,2,3-Trichloropropane	ND		0.0010
2-Chlorotoluene	ND		0.0010
4-Chlorotoluene	ND		0.0010
1,3-Dichlorobenzene	ND		0.0010
1,4-Dichlorobenzene	ND		0.0010
1,2-Dichlorobenzene	ND		0.0010
1,2-Dibromo-3-chloropropane	ND		0.0037
1,2,4-Trichlorobenzene	ND		0.0010
Hexachlorobutadiene	ND		0.0037
1,2,3-Trichlorobenzene	ND		0.0010

Surrogate	Percent Recovery	Control Limits
Dibromofluoromethane	102	71-126
Toluene, d8	95	73-130
4-Bromofluorobenzene	107	70-130

This report pertains to the samples analyzed in accordance with the chain of custody,
and is intended only for the use of the individual or company to whom it is addressed.

Date of Report: September 12, 2006
Samples Submitted: September 1, 2006
Laboratory Reference: 0609-007
Project: 663-010

HALOGENATED VOLATILES by EPA 8260B
page 1 of 2

Date Extracted: 9-5-06
Date Analyzed: 9-5-06

Matrix: Soil
Units: mg/kg (ppm)

Lab ID: 09-007-17
Client ID: EB14-15-16.5

Compound	Results	Flags	PQL
Dichlorodifluoromethane	ND		0.0010
Chloromethane	ND		0.0010
Vinyl Chloride	ND		0.0010
Bromomethane	ND		0.0010
Chloroethane	ND		0.0045
Trichlorofluoromethane	ND		0.0010
1,1-Dichloroethene	ND		0.0010
Iodomethane	ND		0.0045
Methylene Chloride	0.014	H	0.0045
(trans) 1,2-Dichloroethene	ND		0.0010
1,1-Dichloroethane	ND		0.0010
2,2-Dichloropropane	ND		0.0010
(cis) 1,2-Dichloroethene	ND		0.0010
Bromochloromethane	ND		0.0010
Chloroform	ND		0.0010
1,1,1-Trichloroethane	ND		0.0010
Carbon Tetrachloride	ND		0.0010
1,1-Dichloropropene	ND		0.0010
1,2-Dichloroethane	ND		0.0010
Trichloroethene	ND		0.0010
1,2-Dichloropropane	ND		0.0010
Dibromomethane	ND		0.0010
Bromodichloromethane	ND		0.0010
2-Chloroethyl Vinyl Ether	ND		0.0045
(cis) 1,3-Dichloropropene	ND		0.0010
(trans) 1,3-Dichloropropene	ND		0.0010

This report pertains to the samples analyzed in accordance with the chain of custody,
and is intended only for the use of the individual or company to whom it is addressed.

Date of Report: September 12, 2006
Samples Submitted: September 1, 2006
Laboratory Reference: 0609-007
Project: 663-010

HALOGENATED VOLATILES by EPA 8260B
page 2 of 2

Lab ID: 09-007-17
Client ID: EB14-15-16.5

Compound	Results	Flags	PQL
1,1,2-Trichloroethane	ND		0.0010
Tetrachloroethene	0.022		0.0010
1,3-Dichloropropane	ND		0.0010
Dibromochloromethane	ND		0.0010
1,2-Dibromoethane	ND		0.0010
Chlorobenzene	ND		0.0010
1,1,1,2-Tetrachloroethane	ND		0.0010
Bromoform	ND		0.0010
Bromobenzene	ND		0.0010
1,1,2,2-Tetrachloroethane	ND		0.0010
1,2,3-Trichloropropane	ND		0.0010
2-Chlorotoluene	ND		0.0010
4-Chlorotoluene	ND		0.0010
1,3-Dichlorobenzene	ND		0.0010
1,4-Dichlorobenzene	ND		0.0010
1,2-Dichlorobenzene	ND		0.0010
1,2-Dibromo-3-chloropropane	ND		0.0045
1,2,4-Trichlorobenzene	ND		0.0010
Hexachlorobutadiene	ND		0.0045
1,2,3-Trichlorobenzene	ND		0.0010

Surrogate	Percent Recovery	Control Limits
Dibromofluoromethane	100	71-126
Toluene, d8	101	73-130
4-Bromofluorobenzene	103	70-130

This report pertains to the samples analyzed in accordance with the chain of custody,
and is intended only for the use of the individual or company to whom it is addressed.

Date of Report: September 12, 2006
Samples Submitted: September 1, 2006
Laboratory Reference: 0609-007
Project: 663-010

HALOGENATED VOLATILES by EPA 8260B
METHOD BLANK QUALITY CONTROL
page 1 of 2

Date Extracted: 9-5-06
Date Analyzed: 9-5-06

Matrix: Soil
Units: mg/kg (ppm)

Lab ID: MB0905S1

Compound	Results	Flags	PQL
Dichlorodifluoromethane	ND		0.0010
Chloromethane	ND		0.0010
Vinyl Chloride	ND		0.0010
Bromomethane	ND		0.0010
Chloroethane	ND		0.0050
Trichlorofluoromethane	ND		0.0010
1,1-Dichloroethene	ND		0.0010
Iodomethane	ND		0.0050
Methylene Chloride	ND		0.0050
(trans) 1,2-Dichloroethene	ND		0.0010
1,1-Dichloroethane	ND		0.0010
2,2-Dichloropropane	ND		0.0010
(cis) 1,2-Dichloroethene	ND		0.0010
Bromochloromethane	ND		0.0010
Chloroform	ND		0.0010
1,1,1-Trichloroethane	ND		0.0010
Carbon Tetrachloride	ND		0.0010
1,1-Dichloropropene	ND		0.0010
1,2-Dichloroethane	ND		0.0010
Trichloroethene	ND		0.0010
1,2-Dichloropropane	ND		0.0010
Dibromomethane	ND		0.0010
Bromodichloromethane	ND		0.0010
2-Chloroethyl Vinyl Ether	ND		0.0050
(cis) 1,3-Dichloropropene	ND		0.0010
(trans) 1,3-Dichloropropene	ND		0.0010

This report pertains to the samples analyzed in accordance with the chain of custody,
and is intended only for the use of the individual or company to whom it is addressed.

Date of Report: September 12, 2006
Samples Submitted: September 1, 2006
Laboratory Reference: 0609-007
Project: 663-010

HALOGENATED VOLATILES by EPA 8260B
METHOD BLANK QUALITY CONTROL
page 2 of 2

Lab ID: MB0905S1

Compound	Results	Flags	PQL
1,1,2-Trichloroethane	ND		0.0010
Tetrachloroethene	ND		0.0010
1,3-Dichloropropane	ND		0.0010
Dibromochloromethane	ND		0.0010
1,2-Dibromoethane	ND		0.0010
Chlorobenzene	ND		0.0010
1,1,1,2-Tetrachloroethane	ND		0.0010
Bromoform	ND		0.0010
Bromobenzene	ND		0.0010
1,1,2,2-Tetrachloroethane	ND		0.0010
1,2,3-Trichloropropane	ND		0.0010
2-Chlorotoluene	ND		0.0010
4-Chlorotoluene	ND		0.0010
1,3-Dichlorobenzene	ND		0.0010
1,4-Dichlorobenzene	ND		0.0010
1,2-Dichlorobenzene	ND		0.0010
1,2-Dibromo-3-chloropropane	ND		0.0050
1,2,4-Trichlorobenzene	ND		0.0010
Hexachlorobutadiene	ND		0.0050
1,2,3-Trichlorobenzene	ND		0.0010

Surrogate	Percent Recovery	Control Limits
Dibromofluoromethane	96	71-126
Toluene, d8	92	73-130
4-Bromofluorobenzene	108	70-130

This report pertains to the samples analyzed in accordance with the chain of custody,
and is intended only for the use of the individual or company to whom it is addressed.

Date of Report: September 12, 2006
Samples Submitted: September 1, 2006
Laboratory Reference: 0609-007
Project: 663-010

HALOGENATED VOLATILES by EPA 8260B
METHOD BLANK QUALITY CONTROL
page 1 of 2

Date Extracted: 9-6-06
Date Analyzed: 9-6-06

Matrix: Soil
Units: mg/kg (ppm)

Lab ID: MB0906S1

Compound	Results	Flags	PQL
Dichlorodifluoromethane	ND		0.0010
Chloromethane	ND		0.0010
Vinyl Chloride	ND		0.0010
Bromomethane	ND		0.0010
Chloroethane	ND		0.0050
Trichlorofluoromethane	ND		0.0010
1,1-Dichloroethene	ND		0.0010
Iodomethane	ND		0.0050
Methylene Chloride	ND		0.0050
(trans) 1,2-Dichloroethene	ND		0.0010
1,1-Dichloroethane	ND		0.0010
2,2-Dichloropropane	ND		0.0010
(cis) 1,2-Dichloroethene	ND		0.0010
Bromochloromethane	ND		0.0010
Chloroform	ND		0.0010
1,1,1-Trichloroethane	ND		0.0010
Carbon Tetrachloride	ND		0.0010
1,1-Dichloropropene	ND		0.0010
1,2-Dichloroethane	ND		0.0010
Trichloroethene	ND		0.0010
1,2-Dichloropropane	ND		0.0010
Dibromomethane	ND		0.0010
Bromodichloromethane	ND		0.0010
2-Chloroethyl Vinyl Ether	ND		0.0050
(cis) 1,3-Dichloropropene	ND		0.0010
(trans) 1,3-Dichloropropene	ND		0.0010

This report pertains to the samples analyzed in accordance with the chain of custody,
and is intended only for the use of the individual or company to whom it is addressed.

Date of Report: September 12, 2006
Samples Submitted: September 1, 2006
Laboratory Reference: 0609-007
Project: 663-010

HALOGENATED VOLATILES by EPA 8260B
METHOD BLANK QUALITY CONTROL
page 2 of 2

Lab ID: MB0906S1

Compound	Results	Flags	PQL
1,1,2-Trichloroethane	ND		0.0010
Tetrachloroethene	ND		0.0010
1,3-Dichloropropane	ND		0.0010
Dibromochloromethane	ND		0.0010
1,2-Dibromoethane	ND		0.0010
Chlorobenzene	ND		0.0010
1,1,1,2-Tetrachloroethane	ND		0.0010
Bromoform	ND		0.0010
Bromobenzene	ND		0.0010
1,1,2,2-Tetrachloroethane	ND		0.0010
1,2,3-Trichloropropane	ND		0.0010
2-Chlorotoluene	ND		0.0010
4-Chlorotoluene	ND		0.0010
1,3-Dichlorobenzene	ND		0.0010
1,4-Dichlorobenzene	ND		0.0010
1,2-Dichlorobenzene	ND		0.0010
1,2-Dibromo-3-chloropropane	ND		0.0050
1,2,4-Trichlorobenzene	ND		0.0010
Hexachlorobutadiene	ND		0.0050
1,2,3-Trichlorobenzene	ND		0.0010

Surrogate	Percent Recovery	Control Limits
Dibromofluoromethane	101	71-126
Toluene, d8	106	73-130
4-Bromofluorobenzene	106	70-130

This report pertains to the samples analyzed in accordance with the chain of custody,
and is intended only for the use of the individual or company to whom it is addressed.

Date of Report: September 12, 2006
Samples Submitted: September 1, 2006
Laboratory Reference: 0609-007
Project: 663-010

HALOGENATED VOLATILES by EPA 8260B
SB/SBD QUALITY CONTROL

Date Extracted: 9-5-06
Date Analyzed: 9-5-06

Matrix: Soil
Units: mg/kg (ppm)

Lab ID: SB0905S1

Compound	Spike Amount	SB	Percent Recovery	SBD	Percent Recovery	Recovery Limits	Flags
1,1-Dichloroethene	0.0500	0.0557	111	0.0537	107	70-130	
Benzene	0.0500	0.0467	93	0.0465	93	70-130	
Trichloroethene	0.0500	0.0452	90	0.0477	95	70-130	
Toluene	0.0500	0.0445	89	0.0498	100	70-130	
Chlorobenzene	0.0500	0.0504	101	0.0493	99	70-130	

	RPD	RPD Limit	Flags
1,1-Dichloroethene	4	11	
Benzene	1	11	
Trichloroethene	5	13	
Toluene	11	11	
Chlorobenzene	2	12	

This report pertains to the samples analyzed in accordance with the chain of custody,
and is intended only for the use of the individual or company to whom it is addressed.

Date of Report: September 12, 2006
Samples Submitted: September 1, 2006
Laboratory Reference: 0609-007
Project: 663-010

HALOGENATED VOLATILES by EPA 8260B
SB/SBD QUALITY CONTROL

Date Extracted: 9-6-06
Date Analyzed: 9-6-06

Matrix: Soil
Units: mg/kg (ppm)

Lab ID: SB0906S1

Compound	Spike Amount	MS	Percent Recovery	MSD	Percent Recovery	Recovery Limits	Flags
1,1-Dichloroethene	0.050	0.0561	112	0.0598	120	70-130	
Benzene	0.050	0.0481	96	0.0501	100	70-130	
Trichloroethene	0.050	0.0502	100	0.0476	95	70-130	
Toluene	0.050	0.0495	99	0.0487	97	70-130	
Chlorobenzene	0.050	0.0486	97	0.0495	99	70-130	

	RPD	RPD Limit	Flags
1,1-Dichloroethene	6	11	
Benzene	4	11	
Trichloroethene	5	13	
Toluene	2	11	
Chlorobenzene	2	12	

This report pertains to the samples analyzed in accordance with the chain of custody,
and is intended only for the use of the individual or company to whom it is addressed.

Date of Report: September 12, 2006
Samples Submitted: September 1, 2006
Laboratory Reference: 0609-007
Project: 663-010

HALOGENATED VOLATILES by EPA 8260B
page 1 of 2

Date Extracted: 9-6-06
Date Analyzed: 9-6-06

Matrix: Water
Units: ug/L (ppb)

Lab ID: 09-007-20
Client ID: EB14-RGW-25

Compound	Results	Flags	PQL
Dichlorodifluoromethane	ND		2.0
Chloromethane	ND		10
Vinyl Chloride	ND		2.0
Bromomethane	ND		2.0
Chloroethane	ND		10
Trichlorofluoromethane	ND		2.0
1,1-Dichloroethene	ND		2.0
Iodomethane	ND		10
Methylene Chloride	ND		10
(trans) 1,2-Dichloroethene	ND		2.0
1,1-Dichloroethane	ND		2.0
2,2-Dichloropropane	ND		2.0
(cis) 1,2-Dichloroethene	ND		2.0
Bromochloromethane	ND		2.0
Chloroform	ND		2.0
1,1,1-Trichloroethane	ND		2.0
Carbon Tetrachloride	ND		2.0
1,1-Dichloropropene	ND		2.0
1,2-Dichloroethane	ND		2.0
Trichloroethene	ND		2.0
1,2-Dichloropropane	ND		2.0
Dibromomethane	ND		2.0
Bromodichloromethane	ND		2.0
2-Chloroethyl Vinyl Ether	ND		10
(cis) 1,3-Dichloropropene	ND		2.0
(trans) 1,3-Dichloropropene	ND		2.0

This report pertains to the samples analyzed in accordance with the chain of custody,
and is intended only for the use of the individual or company to whom it is addressed.

Date of Report: September 12, 2006
Samples Submitted: September 1, 2006
Laboratory Reference: 0609-007
Project: 663-010

HALOGENATED VOLATILES by EPA 8260B
page 2 of 2

Lab ID: 09-007-20
Client ID: EB14-RGW-25

Compound	Results	Flags	PQL
1,1,2-Trichloroethane	ND		2.0
Tetrachloroethene	280		2.0
1,3-Dichloropropane	ND		2.0
Dibromochloromethane	ND		2.0
1,2-Dibromoethane	ND		2.0
Chlorobenzene	ND		2.0
1,1,1,2-Tetrachloroethane	ND		2.0
Bromoform	ND		10
Bromobenzene	ND		2.0
1,1,2,2-Tetrachloroethane	ND		2.0
1,2,3-Trichloropropane	ND		2.0
2-Chlorotoluene	ND		2.0
4-Chlorotoluene	ND		2.0
1,3-Dichlorobenzene	ND		2.0
1,4-Dichlorobenzene	ND		2.0
1,2-Dichlorobenzene	ND		2.0
1,2-Dibromo-3-chloropropane	ND		10
1,2,4-Trichlorobenzene	ND		2.0
Hexachlorobutadiene	ND		2.0
1,2,3-Trichlorobenzene	ND		2.0

Surrogate	Percent Recovery	Control Limits
Dibromofluoromethane	95	70-123
Toluene, d8	89	70-119
4-Bromofluorobenzene	88	70-119

This report pertains to the samples analyzed in accordance with the chain of custody,
and is intended only for the use of the individual or company to whom it is addressed.

Date of Report: September 12, 2006
Samples Submitted: September 1, 2006
Laboratory Reference: 0609-007
Project: 663-010

HALOGENATED VOLATILES by EPA 8260B
METHOD BLANK QUALITY CONTROL
page 1 of 2

Date Extracted: 9-6-06
Date Analyzed: 9-6-06

Matrix: Water
Units: ug/L (ppb)

Lab ID: MB0906W1

Compound	Results	Flags	PQL
Dichlorodifluoromethane	ND		0.20
Chloromethane	ND		1.0
Vinyl Chloride	ND		0.20
Bromomethane	ND		0.20
Chloroethane	ND		1.0
Trichlorofluoromethane	ND		0.20
1,1-Dichloroethene	ND		0.20
Iodomethane	ND		1.0
Methylene Chloride	ND		1.0
(trans) 1,2-Dichloroethene	ND		0.20
1,1-Dichloroethane	ND		0.20
2,2-Dichloropropane	ND		0.20
(cis) 1,2-Dichloroethene	ND		0.20
Bromochloromethane	ND		0.20
Chloroform	ND		0.20
1,1,1-Trichloroethane	ND		0.20
Carbon Tetrachloride	ND		0.20
1,1-Dichloropropene	ND		0.20
1,2-Dichloroethane	ND		0.20
Trichloroethene	ND		0.20
1,2-Dichloropropane	ND		0.20
Dibromomethane	ND		0.20
Bromodichloromethane	ND		0.20
2-Chloroethyl Vinyl Ether	ND		1.0
(cis) 1,3-Dichloropropene	ND		0.20
(trans) 1,3-Dichloropropene	ND		0.20

This report pertains to the samples analyzed in accordance with the chain of custody,
and is intended only for the use of the individual or company to whom it is addressed.

Date of Report: September 12, 2006
Samples Submitted: September 1, 2006
Laboratory Reference: 0609-007
Project: 663-010

HALOGENATED VOLATILES by EPA 8260B
METHOD BLANK QUALITY CONTROL
page 2 of 2

Lab ID: MB0906W1

Compound	Results	Flags	PQL
1,1,2-Trichloroethane	ND		0.20
Tetrachloroethene	ND		0.20
1,3-Dichloropropane	ND		0.20
Dibromochloromethane	ND		0.20
1,2-Dibromoethane	ND		0.20
Chlorobenzene	ND		0.20
1,1,1,2-Tetrachloroethane	ND		0.20
Bromoform	ND		1.0
Bromobenzene	ND		0.20
1,1,2,2-Tetrachloroethane	ND		0.20
1,2,3-Trichloropropane	ND		0.20
2-Chlorotoluene	ND		0.20
4-Chlorotoluene	ND		0.20
1,3-Dichlorobenzene	ND		0.20
1,4-Dichlorobenzene	ND		0.20
1,2-Dichlorobenzene	ND		0.20
1,2-Dibromo-3-chloropropane	ND		1.0
1,2,4-Trichlorobenzene	ND		0.20
Hexachlorobutadiene	ND		0.20
1,2,3-Trichlorobenzene	ND		0.20

Surrogate	Percent Recovery	Control Limits
Dibromofluoromethane	91	70-123
Toluene, d8	88	70-119
4-Bromofluorobenzene	88	70-119

This report pertains to the samples analyzed in accordance with the chain of custody,
and is intended only for the use of the individual or company to whom it is addressed.

Date of Report: September 12, 2006
Samples Submitted: September 1, 2006
Laboratory Reference: 0609-007
Project: 663-010

HALOGENATED VOLATILES by EPA 8260B
SB/SBD QUALITY CONTROL

Date Extracted: 9-6-06
Date Analyzed: 9-6-06

Matrix: Water
Units: ug/L (ppb)

Lab ID: SB0906W1

Compound	Spike Amount	SB	Percent Recovery	SBD	Percent Recovery	Recovery Limits	Flags
1,1-Dichloroethene	10.0	8.92	89	8.79	88	70-130	
Benzene	10.0	9.43	94	9.43	94	70-130	
Trichloroethene	10.0	8.86	89	8.75	88	70-130	
Toluene	10.0	9.40	94	9.32	93	70-130	
Chlorobenzene	10.0	9.52	95	9.34	93	70-130	

	RPD	RPD Limit	Flags
1,1-Dichloroethene	1	17	
Benzene	0	13	
Trichloroethene	1	12	
Toluene	1	14	
Chlorobenzene	2	9	

This report pertains to the samples analyzed in accordance with the chain of custody,
and is intended only for the use of the individual or company to whom it is addressed.

Date of Report: September 12, 2006
Samples Submitted: September 1, 2006
Laboratory Reference: 0609-007
Project: 663-010

% MOISTURE

Date Analyzed: 9-5-06

Client ID	Lab ID	% Moisture
EB13-5-5.5	09-007-01	10
EB13-20-21	09-007-04	8
EB12-5-6.5	09-007-08	20
EB12-15-16	09-007-10	11
EB12-30-30.5	09-007-13	11
EB14-5-6.5	09-007-15	17
EB14-15-16.5	09-007-17	4

This report pertains to the samples analyzed in accordance with the chain of custody,
and is intended only for the use of the individual or company to whom it is addressed.

OnSite Environmental Inc.

Data Qualifiers and Abbreviations

A - Due to a high sample concentration, the amount spiked is insufficient for meaningful MS/MSD recovery data.

B - The analyte indicated was also found in the blank sample.

C - The duplicate RPD is outside control limits due to high result variability when analyte concentrations are within five times the quantitation limit.

E - The value reported exceeds the quantitation range and is an estimate.

F - Surrogate recovery data is not available due to the high concentration of coeluting target compounds.

G - Insufficient sample quantity for duplicate analysis.

H - The analyte indicated is a common laboratory solvent and may have been introduced during sample preparation, and be impacting the sample result.

I - Compound recovery is outside of the control limits.

J - The value reported was below the practical quantitation limit. The value is an estimate.

K - Sample duplicate RPD is outside control limits due to sample inhomogeneity. The sample was re-extracted and re-analyzed with similar results.

L - The RPD is outside of the control limits.

M - Hydrocarbons in the gasoline range (toluene-napthalene) are present in the sample.

O - Hydrocarbons indicative of diesel fuel are present in the sample and are impacting the gasoline result.

P - The RPD of the detected concentrations between the two columns is greater than 40.

Q - Surrogate recovery is outside of the control limits.

S - Surrogate recovery data is not available due to the necessary dilution of the sample.

T - The sample chromatogram is not similar to a typical _____.

U - The analyte was analyzed for, but was not detected above the reported sample quantitation limit.

V - Matrix Spike/Matrix Spike Duplicate recoveries are outside control limits due to matrix effects.

W - Matrix Spike/Matrix Spike Duplicate RPD are outside control limits due to matrix effects.

X - Sample extract treated with a silica gel cleanup procedure.

Y - Sample extract treated with an acid/silica gel cleanup procedure.

Z -

ND - Not Detected at PQL
PQL - Practical Quantitation Limit
RPD - Relative Percent Difference

This report pertains to the samples analyzed in accordance with the chain of custody, and is intended only for the use of the individual or company to whom it is addressed.

Chain of Custody

OnSite Environmental Inc.
14648 NE 95th Street • Redmond, WA 98052
Phone: (425) 883-3881 • Fax: (425) 885-4603

Company: FARALLON
Project Number: 6663-010
Project Name: ALLISON'S NORGE VILLAGE
Project Manager: CARLA BROCK
Sampled by: J SCHMITT

Turnaround Request (in working days)

(Check One)

- ☐ Same Day ☐ 1 Day
- ☐ 2 Day ☐ 3 Day
- ☒ Standard (7 working days) (TPH analysis 5 working days)
- ☐ _____ (other)

Laboratory Number: 09-007

Lab ID	Sample Identification	Date Sampled	Time Sampled	Matrix	# of Cont.	NWTPH-HCID	NWTPH-Gx/BTEX	NWTPH-Dx	Volatiles by 8260B	Halogenated Volatiles by 8260B	Semivolatiles by 8270C	PAHs by 8270C / SIM	PCBs by 8082	Pesticides by 8081A	Herbicides by 8151A	Total RCRA Metals (8)	TCLP Metals	HEM by 1664	VPH	EPH				% Moisture
1	EB13-5-5.5	8/31/06	0930	S	4					⊗														⊗
2	EB13-10-11.5		0934																					
3	EB13-15-16.5		0936																					
4	EB13-20-21		0940							⊗														⊗
5	EB13-25-26		0950																					
6	EB13-35-35.5		1000																					
7	EB13-39-40		1012																					
8	EB12-5-6.5		1105							⊗														⊗
9	EB12-10-11.5		1109																					
10	EB12-15-16		1114	↓	↓				⊗															⊗

	Signature	Company	Date	Time
Relinquished by		Farallon	9/01/06	1435
Received by			9/1/06	1435
Relinquished by				
Received by				
Relinquished by				
Received by				

Comments/Special Instructions:

⊗ Added 9/5/06. DB

Reviewed by/Date

Reviewed by/Date

Chromatograms with final report ☐

DISTRIBUTION LEGEND: White - OnSite Copy Yellow - Report Copy Pink - Client Copy

Chain of Custody

OnSite Environmental Inc.
14648 NE 95th Street • Redmond, WA 98052
Phone: (425) 883-3881 • Fax: (425) 885-4603

Company: Farallon
Project Number: 663-010
Project Name: Allison's Norge Village
Project Manager: Carla Brock
Sampled by: J Schmitt

Turnaround Request (in working days)

(Check One)

- ☐ Same Day
- ☐ 1 Day
- ☐ 2 Day
- ☐ 3 Day
- ☒ Standard (7 working days) (TPH analysis 5 working days)
- ☐ _____ (other)

Laboratory Number: 09-007

Requested Analysis

Lab ID	Sample Identification	Date Sampled	Time Sampled	Matrix	# of Cont.	NWTPH-HCID	NWTPH-Gx/BTEX	NWTPH-Dx	Volatiles by 8260B	Halogenated Volatiles by 8260B	Semivolatiles by 8270C	PAHs by 8270C / SIM	PCBs by 8082	Pesticides by 8081A	Herbicides by 8151A	Total RCRA Metals (8)	TCLP Metals	HEM by 1664	VPH	EPH	% Moisture
11	EB12-20-21.5	8/31/06	1120	S	4																
12	EB12-25-25.5		1126																		
13	EB12-30-30.5		1130							⊗											⊗
14	EB12-40-40.5		1158																		
15	EB14-5-6.5		1340							⊗											⊗
16	EB14-10-11		1348																		
17	EB14-15-16.5		1356							⊗											⊗
18	EB14-20-21.5		1406																		
19	EB14-25-25.5		1436																		
20	EB14-RGW-25		1430	W	4					⊗											⊗ NO DB

	Signature	Company	Date	Time
Relinquished by		Farallon	9/1/06	1435
Received by		OSE	9/1/06	1435
Relinquished by				
Received by				
Relinquished by				
Received by				
Reviewed by/Date		Reviewed by/Date		

Comments/Special Instructions:
⊗ Added 9/5/06. DB

Chromatograms with final report ☐

DISTRIBUTION LEGEND: White - OnSite Copy Yellow - Report Copy Pink - Client Copy

OnSite Environmental Inc.
14648 NE 95th Street, Redmond, WA 98052 • (425) 883-3881

December 21, 2006

Carla Brock
Farallon Consulting, LLC
975 5th Avenue NW
Issaquah, WA 98027

Re: Analytical Data for Project 663-010
Laboratory Reference No. 0612-192

Dear Carla:

Enclosed are the analytical results and associated quality control data for samples submitted on December 20, 2006.

The standard policy of OnSite Environmental Inc. is to store your samples for 30 days from the date of receipt. If you require longer storage, please contact the laboratory.

We appreciate the opportunity to be of service to you on this project. If you have any questions concerning the data, or need additional information, please feel free to call me.

Sincerely,

David Baumeister
Project Manager

Enclosures

This report pertains to the samples analyzed in accordance with the chain of custody, and is intended only for the use of the individual or company to whom it is addressed.

Date of Report: December 21, 2006
Samples Submitted: December 20, 2006
Laboratory Reference: 0612-192
Project: 663-010

Case Narrative

Samples were collected on December 19, 2006 and received by the laboratory on December 20, 2006. They were maintained at the laboratory at a temperature of 2°C to 6°C except as noted below.

General QA/QC issues associated with the analytical data enclosed in this laboratory report will be indicated with a reference to a comment or explanation on the Data Qualifier page. More complex and involved QA/QC issues will be discussed in detail below.

Halogenated Volatiles EPA 8260B Analysis

Per EPA Method 5035A, samples were received by the laboratory in pre-weighed 40 mL VOA vials within 48 hours of sample collection. They were stored in a freezer at between -7°C and -20°C until extraction or analysis.

All four internal standards did not meet acceptance criteria for sample Box-910201-1. The sample was re-analyzed with similar results. Leaks in the sealed VOA environment caused by grit between the VOA lip and VOA cap septum has been shown to cause low internal standard recovery. The sample was consequently analyzed by high-level method and reported. Some MTCA cleanup levels are therefore non-achievable.

Any other QA/QC issues associated with this extraction and analysis will be indicated with a footnote reference and discussed in detail on the Data Qualifier page.

This report pertains to the samples analyzed in accordance with the chain of custody, and is intended only for the use of the individual or company to whom it is addressed.

Date of Report: December 21, 2006
Samples Submitted: December 20, 2006
Laboratory Reference: 0612-192
Project: 663-010

HALOGENATED VOLATILES by EPA 8260B
page 1 of 2

Date Extracted: 12-20-06
Date Analyzed: 12-20-06

Matrix: Soil
Units: mg/kg (ppm)

Lab ID: 12-192-01
Client ID: Box-910201-1

Compound	Results	Flags	PQL
Dichlorodifluoromethane	ND		0.050
Chloromethane	ND		0.050
Vinyl Chloride	ND		0.050
Bromomethane	ND		0.050
Chloroethane	ND		0.25
Trichlorofluoromethane	ND		0.050
1,1-Dichloroethene	ND		0.050
Iodomethane	ND		0.25
Methylene Chloride	ND		0.25
(trans) 1,2-Dichloroethene	ND		0.050
1,1-Dichloroethane	ND		0.050
2,2-Dichloropropane	ND		0.050
(cis) 1,2-Dichloroethene	ND		0.050
Bromochloromethane	ND		0.050
Chloroform	ND		0.050
1,1,1-Trichloroethane	ND		0.050
Carbon Tetrachloride	ND		0.050
1,1-Dichloropropene	ND		0.050
1,2-Dichloroethane	ND		0.050
Trichloroethene	ND		0.050
1,2-Dichloropropane	ND		0.050
Dibromomethane	ND		0.050
Bromodichloromethane	ND		0.050
2-Chloroethyl Vinyl Ether	ND		0.25
(cis) 1,3-Dichloropropene	ND		0.050
(trans) 1,3-Dichloropropene	ND		0.050

This report pertains to the samples analyzed in accordance with the chain of custody,
and is intended only for the use of the individual or company to whom it is addressed.

Date of Report: December 21, 2006
Samples Submitted: December 20, 2006
Laboratory Reference: 0612-192
Project: 663-010

HALOGENATED VOLATILES by EPA 8260B
page 2 of 2

Lab ID: 12-192-01
Client ID: Box-910201-1

Compound	Results	Flags	PQL
1,1,2-Trichloroethane	ND		0.050
Tetrachloroethene	0.23		0.050
1,3-Dichloropropane	ND		0.050
Dibromochloromethane	ND		0.050
1,2-Dibromoethane	ND		0.050
Chlorobenzene	ND		0.050
1,1,1,2-Tetrachloroethane	ND		0.050
Bromoform	ND		0.050
Bromobenzene	ND		0.050
1,1,2,2-Tetrachloroethane	ND		0.050
1,2,3-Trichloropropane	ND		0.050
2-Chlorotoluene	ND		0.050
4-Chlorotoluene	ND		0.050
1,3-Dichlorobenzene	ND		0.050
1,4-Dichlorobenzene	ND		0.050
1,2-Dichlorobenzene	ND		0.050
1,2-Dibromo-3-chloropropane	ND		0.25
1,2,4-Trichlorobenzene	ND		0.050
Hexachlorobutadiene	ND		0.25
1,2,3-Trichlorobenzene	ND		0.050

Surrogate	Percent Recovery	Control Limits
Dibromofluoromethane	91	71-126
Toluene, d8	86	73-130
4-Bromofluorobenzene	91	70-130

This report pertains to the samples analyzed in accordance with the chain of custody,
and is intended only for the use of the individual or company to whom it is addressed.

Date of Report: December 21, 2006
Samples Submitted: December 20, 2006
Laboratory Reference: 0612-192
Project: 663-010

HALOGENATED VOLATILES by EPA 8260B
page 1 of 2

Date Extracted: 12-20-06
Date Analyzed: 12-20-06

Matrix: Soil
Units: mg/kg (ppm)

Lab ID: 12-192-02
Client ID: Box-910201-2

Compound	Results	Flags	PQL
Dichlorodifluoromethane	ND		0.0010
Chloromethane	ND		0.0010
Vinyl Chloride	ND		0.0010
Bromomethane	ND		0.0010
Chloroethane	ND		0.0052
Trichlorofluoromethane	ND		0.0010
1,1-Dichloroethene	ND		0.0010
Iodomethane	ND		0.0052
Methylene Chloride	ND		0.0052
(trans) 1,2-Dichloroethene	ND		0.0010
1,1-Dichloroethane	ND		0.0010
2,2-Dichloropropane	ND		0.0010
(cis) 1,2-Dichloroethene	ND		0.0010
Bromochloromethane	ND		0.0010
Chloroform	ND		0.0010
1,1,1-Trichloroethane	ND		0.0010
Carbon Tetrachloride	ND		0.0010
1,1-Dichloropropene	ND		0.0010
1,2-Dichloroethane	ND		0.0010
Trichloroethene	ND		0.0010
1,2-Dichloropropane	ND		0.0010
Dibromomethane	ND		0.0010
Bromodichloromethane	ND		0.0010
2-Chloroethyl Vinyl Ether	ND		0.0052
(cis) 1,3-Dichloropropene	ND		0.0010
(trans) 1,3-Dichloropropene	ND		0.0010

This report pertains to the samples analyzed in accordance with the chain of custody,
and is intended only for the use of the individual or company to whom it is addressed.

Date of Report: December 21, 2006
Samples Submitted: December 20, 2006
Laboratory Reference: 0612-192
Project: 663-010

HALOGENATED VOLATILES by EPA 8260B
page 2 of 2

Lab ID: 12-192-02
Client ID: Box-910201-2

Compound	Results	Flags	PQL
1,1,2-Trichloroethane	ND		0.0010
Tetrachloroethene	0.19		0.0010
1,3-Dichloropropane	ND		0.0010
Dibromochloromethane	ND		0.0010
1,2-Dibromoethane	ND		0.0010
Chlorobenzene	ND		0.0010
1,1,1,2-Tetrachloroethane	ND		0.0010
Bromoform	ND		0.0010
Bromobenzene	ND		0.0010
1,1,2,2-Tetrachloroethane	ND		0.0010
1,2,3-Trichloropropane	ND		0.0010
2-Chlorotoluene	ND		0.0010
4-Chlorotoluene	ND		0.0010
1,3-Dichlorobenzene	ND		0.0010
1,4-Dichlorobenzene	ND		0.0010
1,2-Dichlorobenzene	ND		0.0010
1,2-Dibromo-3-chloropropane	ND		0.0052
1,2,4-Trichlorobenzene	ND		0.0010
Hexachlorobutadiene	ND		0.0052
1,2,3-Trichlorobenzene	ND		0.0010

Surrogate	Percent Recovery	Control Limits
Dibromofluoromethane	90	71-126
Toluene, d8	82	73-130
4-Bromofluorobenzene	105	70-130

This report pertains to the samples analyzed in accordance with the chain of custody,
and is intended only for the use of the individual or company to whom it is addressed.

Date of Report: December 21, 2006
Samples Submitted: December 20, 2006
Laboratory Reference: 0612-192
Project: 663-010

HALOGENATED VOLATILES by EPA 8260B
METHOD BLANK QUALITY CONTROL
page 1 of 2

Date Extracted: 12-20-06
Date Analyzed: 12-20-06

Matrix: Soil
Units: mg/kg (ppm)

Lab ID: MB1220S1

Compound	Results	Flags	PQL
Dichlorodifluoromethane	ND		0.0010
Chloromethane	ND		0.0010
Vinyl Chloride	ND		0.0010
Bromomethane	ND		0.0010
Chloroethane	ND		0.0050
Trichlorofluoromethane	ND		0.0010
1,1-Dichloroethene	ND		0.0010
Iodomethane	ND		0.0050
Methylene Chloride	ND		0.0050
(trans) 1,2-Dichloroethene	ND		0.0010
1,1-Dichloroethane	ND		0.0010
2,2-Dichloropropane	ND		0.0010
(cis) 1,2-Dichloroethene	ND		0.0010
Bromochloromethane	ND		0.0010
Chloroform	ND		0.0010
1,1,1-Trichloroethane	ND		0.0010
Carbon Tetrachloride	ND		0.0010
1,1-Dichloropropene	ND		0.0010
1,2-Dichloroethane	ND		0.0010
Trichloroethene	ND		0.0010
1,2-Dichloropropane	ND		0.0010
Dibromomethane	ND		0.0010
Bromodichloromethane	ND		0.0010
2-Chloroethyl Vinyl Ether	ND		0.0050
(cis) 1,3-Dichloropropene	ND		0.0010
(trans) 1,3-Dichloropropene	ND		0.0010

This report pertains to the samples analyzed in accordance with the chain of custody,
and is intended only for the use of the individual or company to whom it is addressed.

Date of Report: December 21, 2006
Samples Submitted: December 20, 2006
Laboratory Reference: 0612-192
Project: 663-010

HALOGENATED VOLATILES by EPA 8260B
METHOD BLANK QUALITY CONTROL
page 2 of 2

Lab ID: MB1220S1

Compound	Results	Flags	PQL
1,1,2-Trichloroethane	ND		0.0010
Tetrachloroethene	ND		0.0010
1,3-Dichloropropane	ND		0.0010
Dibromochloromethane	ND		0.0010
1,2-Dibromoethane	ND		0.0010
Chlorobenzene	ND		0.0010
1,1,1,2-Tetrachloroethane	ND		0.0010
Bromoform	ND		0.0010
Bromobenzene	ND		0.0010
1,1,2,2-Tetrachloroethane	ND		0.0010
1,2,3-Trichloropropane	ND		0.0010
2-Chlorotoluene	ND		0.0010
4-Chlorotoluene	ND		0.0010
1,3-Dichlorobenzene	ND		0.0010
1,4-Dichlorobenzene	ND		0.0010
1,2-Dichlorobenzene	ND		0.0010
1,2-Dibromo-3-chloropropane	ND		0.0050
1,2,4-Trichlorobenzene	ND		0.0010
Hexachlorobutadiene	ND		0.0050
1,2,3-Trichlorobenzene	ND		0.0010

Surrogate	Percent Recovery	Control Limits
Dibromofluoromethane	87	71-126
Toluene, d8	93	73-130
4-Bromofluorobenzene	105	70-130

This report pertains to the samples analyzed in accordance with the chain of custody,
and is intended only for the use of the individual or company to whom it is addressed.

Date of Report: December 21, 2006
Samples Submitted: December 20, 2006
Laboratory Reference: 0612-192
Project: 663-010

HALOGENATED VOLATILES by EPA 8260B
SB/SBD QUALITY CONTROL

Date Extracted: 12-20-06
Date Analyzed: 12-20-06

Matrix: Soil
Units: mg/kg (ppm)

Lab ID: SB1220S1

Compound	Spike Amount	SB	Percent Recovery	SBD	Percent Recovery	Recovery Limits	Flags
1,1-Dichloroethene	0.0500	0.0429	86	0.0455	91	70-130	
Benzene	0.0500	0.0463	93	0.0492	98	70-130	
Trichloroethene	0.0500	0.0427	85	0.0432	86	70-130	
Toluene	0.0500	0.0473	95	0.0461	92	70-130	
Chlorobenzene	0.0500	0.0492	98	0.0482	96	70-130	

	RPD	RPD Limit	Flags
1,1-Dichloroethene	6	11	
Benzene	6	11	
Trichloroethene	1	13	
Toluene	2	11	
Chlorobenzene	2	12	

This report pertains to the samples analyzed in accordance with the chain of custody,
and is intended only for the use of the individual or company to whom it is addressed.

Date of Report: December 21, 2006
Samples Submitted: December 20, 2006
Laboratory Reference: 0612-192
Project: 663-010

% MOISTURE

Date Analyzed: 12-20-06

Client ID	Lab ID	% Moisture
Box-910201-1	12-192-01	20
Box-910201-2	12-192-02	21

This report pertains to the samples analyzed in accordance with the chain of custody,
and is intended only for the use of the individual or company to whom it is addressed.

OnSite Environmental Inc.

Data Qualifiers and Abbreviations

A - Due to a high sample concentration, the amount spiked is insufficient for meaningful MS/MSD recovery data.

B - The analyte indicated was also found in the blank sample.

C - The duplicate RPD is outside control limits due to high result variability when analyte concentrations are within five times the quantitation limit.

E - The value reported exceeds the quantitation range and is an estimate.

F - Surrogate recovery data is not available due to the high concentration of coeluting target compounds.

G - Insufficient sample quantity for duplicate analysis.

H - The analyte indicated is a common laboratory solvent and may have been introduced during sample preparation, and be impacting the sample result.

I - Compound recovery is outside of the control limits.

J - The value reported was below the practical quantitation limit. The value is an estimate.

K - Sample duplicate RPD is outside control limits due to sample inhomogeneity. The sample was re-extracted and re-analyzed with similar results.

L - The RPD is outside of the control limits.

M - Hydrocarbons in the gasoline range (toluene-napthalene) are present in the sample.

O - Hydrocarbons indicative of diesel fuel are present in the sample and are impacting the gasoline result.

P - The RPD of the detected concentrations between the two columns is greater than 40.

Q - Surrogate recovery is outside of the control limits.

S - Surrogate recovery data is not available due to the necessary dilution of the sample.

T - The sample chromatogram is not similar to a typical _____.

U - The analyte was analyzed for, but was not detected above the reported sample quantitation limit.

V - Matrix Spike/Matrix Spike Duplicate recoveries are outside control limits due to matrix effects.

W - Matrix Spike/Matrix Spike Duplicate RPD are outside control limits due to matrix effects.

X - Sample extract treated with a silica gel cleanup procedure.

Y - Sample extract treated with an acid/silica gel cleanup procedure.

Z -

ND - Not Detected at PQL
PQL - Practical Quantitation Limit
RPD - Relative Percent Difference

This report pertains to the samples analyzed in accordance with the chain of custody, and is intended only for the use of the individual or company to whom it is addressed.

Chain of Custody

Page 1 of 1

OnSite Environmental Inc.
14648 NE 95th Street • Redmond, WA 98052
Phone: (425) 883-3881 • Fax: (425) 885-4603

Company: Farallon Consulting
Project Number: 663-010
Project Name: Allison's Norge Village
Project Manager: C. Brock
Sampled by: F. Reider

Turnaround Request (in working days)

(Check One)

- [X] Same Day
- [ ] 1 Day
- [ ] 2 Day
- [ ] 3 Day
- [ ] Standard (7 working days)
- [ ] _____ (other)

Laboratory Number: 12-192

Requested Analysis

Lab ID	Sample Identification	Date Sampled	Time Sampled	Matrix	# of Cont.	NWTPH-HCID	NWTPH-Gx/BTEX	NWTPH-Dx	Volatiles by 8260B	Halogenated Volatiles by 8260B	Semivolatiles by 8270C	PAHs by 8270C / SIM	PCBs by 8082	Pesticides by 8081A	Herbicides by 8151A	Total RCRA Metals (8)	TCLP Metals	HEM by 1664	VPH	EPH	% Moisture
1	Box-910201-1	12/19/06	1300	S	4					X											X
2	Box-910201-2	12/19/06	1305	S	4					X											X

F/R

	Signature	Company	Date	Time
Relinquished by		Farallon	12/19/06	1330
Received by		Onsite	12-20-06	1130
Relinquished by				
Received by				
Relinquished by				
Received by				

Comments/Special Instructions:

Reviewed by/Date

Reviewed by/Date

Chromatograms with final report ☐

DISTRIBUTION LEGEND: White - OnSite Copy Yellow - Report Copy Pink - Client Copy

OnSite Environmental Inc.
14648 NE 95th Street, Redmond, WA 98052 • (425) 883-3881

December 21, 2006

Carla Brock
Farallon Consulting, LLC
975 5th Avenue NW
Issaquah, WA 98027

Re: Analytical Data for Project 663-010
Laboratory Reference No. 0612-191

Dear Carla:

Enclosed are the analytical results and associated quality control data for samples submitted on December 20, 2006.

The standard policy of OnSite Environmental Inc. is to store your samples for 30 days from the date of receipt. If you require longer storage, please contact the laboratory.

We appreciate the opportunity to be of service to you on this project. If you have any questions concerning the data, or need additional information, please feel free to call me.

Sincerely,

David Baumeister
Project Manager

Enclosures

This report pertains to the samples analyzed in accordance with the chain of custody, and is intended only for the use of the individual or company to whom it is addressed.

Date of Report: December 21, 2006
Samples Submitted: December 20, 2006
Laboratory Reference: 0612-191
Project: 663-010

Case Narrative

Samples were collected on December 19, 2006 and received by the laboratory on December 20, 2006. They were maintained at the laboratory at a temperature of 2°C to 6°C except as noted below.

General QA/QC issues associated with the analytical data enclosed in this laboratory report will be indicated with a reference to a comment or explanation on the Data Qualifier page. More complex and involved QA/QC issues will be discussed in detail below.

Halogenated Volatiles EPA 8260B Analysis

Per EPA Method 5035A, samples were received by the laboratory in pre-weighed 40 mL VOA vials within 48 hours of sample collection. They were stored in a freezer at between -7°C and -20°C until extraction or analysis.

Any other QA/QC issues associated with this extraction and analysis will be indicated with a footnote reference and discussed in detail on the Data Qualifier page.

This report pertains to the samples analyzed in accordance with the chain of custody, and is intended only for the use of the individual or company to whom it is addressed.

Date of Report: December 21, 2006
Samples Submitted: December 20, 2006
Laboratory Reference: 0612-191
Project: 663-010

HALOGENATED VOLATILES by EPA 8260B
page 1 of 2

Date Extracted: 12-20-06
Date Analyzed: 12-20-06

Matrix: Soil
Units: mg/kg (ppm)

Lab ID: 12-191-01
Client ID: Box-910212-1

Compound	Results	Flags	PQL
Dichlorodifluoromethane	ND		0.00097
Chloromethane	ND		0.00097
Vinyl Chloride	ND		0.00097
Bromomethane	ND		0.00097
Chloroethane	ND		0.0048
Trichlorofluoromethane	ND		0.00097
1,1-Dichloroethene	ND		0.00097
Iodomethane	ND		0.0048
Methylene Chloride	ND		0.0048
(trans) 1,2-Dichloroethene	ND		0.00097
1,1-Dichloroethane	ND		0.00097
2,2-Dichloropropane	ND		0.00097
(cis) 1,2-Dichloroethene	ND		0.00097
Bromochloromethane	ND		0.00097
Chloroform	ND		0.00097
1,1,1-Trichloroethane	ND		0.00097
Carbon Tetrachloride	ND		0.00097
1,1-Dichloropropene	ND		0.00097
1,2-Dichloroethane	ND		0.00097
Trichloroethene	ND		0.00097
1,2-Dichloropropane	ND		0.00097
Dibromomethane	ND		0.00097
Bromodichloromethane	ND		0.00097
2-Chloroethyl Vinyl Ether	ND		0.0048
(cis) 1,3-Dichloropropene	ND		0.00097
(trans) 1,3-Dichloropropene	ND		0.00097

This report pertains to the samples analyzed in accordance with the chain of custody,
and is intended only for the use of the individual or company to whom it is addressed.

Date of Report: December 21, 2006
Samples Submitted: December 20, 2006
Laboratory Reference: 0612-191
Project: 663-010

HALOGENATED VOLATILES by EPA 8260B
page 2 of 2

Lab ID: 12-191-01
Client ID: Box-910212-1

Compound	Results	Flags	PQL
1,1,2-Trichloroethane	ND		0.00097
Tetrachloroethene	0.15		0.00097
1,3-Dichloropropane	ND		0.00097
Dibromochloromethane	ND		0.00097
1,2-Dibromoethane	ND		0.00097
Chlorobenzene	ND		0.00097
1,1,1,2-Tetrachloroethane	ND		0.00097
Bromoform	ND		0.00097
Bromobenzene	ND		0.00097
1,1,2,2-Tetrachloroethane	ND		0.00097
1,2,3-Trichloropropane	ND		0.00097
2-Chlorotoluene	ND		0.00097
4-Chlorotoluene	ND		0.00097
1,3-Dichlorobenzene	ND		0.00097
1,4-Dichlorobenzene	ND		0.00097
1,2-Dichlorobenzene	ND		0.00097
1,2-Dibromo-3-chloropropane	ND		0.0048
1,2,4-Trichlorobenzene	ND		0.00097
Hexachlorobutadiene	ND		0.0048
1,2,3-Trichlorobenzene	ND		0.00097

Surrogate	Percent Recovery	Control Limits
Dibromofluoromethane	93	71-126
Toluene, d8	85	73-130
4-Bromofluorobenzene	98	70-130

This report pertains to the samples analyzed in accordance with the chain of custody,
and is intended only for the use of the individual or company to whom it is addressed.

Date of Report: December 21, 2006
Samples Submitted: December 20, 2006
Laboratory Reference: 0612-191
Project: 663-010

HALOGENATED VOLATILES by EPA 8260B
page 1 of 2

Date Extracted: 12-20-06
Date Analyzed: 12-20-06

Matrix: Soil
Units: mg/kg (ppm)

Lab ID: 12-191-02
Client ID: Box-910212-2

Compound	Results	Flags	PQL
Dichlorodifluoromethane	ND		0.0011
Chloromethane	ND		0.0011
Vinyl Chloride	ND		0.0011
Bromomethane	ND		0.0011
Chloroethane	ND		0.0057
Trichlorofluoromethane	ND		0.0011
1,1-Dichloroethene	ND		0.0011
Iodomethane	ND		0.0057
Methylene Chloride	ND		0.0057
(trans) 1,2-Dichloroethene	ND		0.0011
1,1-Dichloroethane	ND		0.0011
2,2-Dichloropropane	ND		0.0011
(cis) 1,2-Dichloroethene	ND		0.0011
Bromochloromethane	ND		0.0011
Chloroform	ND		0.0011
1,1,1-Trichloroethane	ND		0.0011
Carbon Tetrachloride	ND		0.0011
1,1-Dichloropropene	ND		0.0011
1,2-Dichloroethane	ND		0.0011
Trichloroethene	ND		0.0011
1,2-Dichloropropane	ND		0.0011
Dibromomethane	ND		0.0011
Bromodichloromethane	ND		0.0011
2-Chloroethyl Vinyl Ether	ND		0.0057
(cis) 1,3-Dichloropropene	ND		0.0011
(trans) 1,3-Dichloropropene	ND		0.0011

This report pertains to the samples analyzed in accordance with the chain of custody,
and is intended only for the use of the individual or company to whom it is addressed.

Date of Report: December 21, 2006
Samples Submitted: December 20, 2006
Laboratory Reference: 0612-191
Project: 663-010

HALOGENATED VOLATILES by EPA 8260B
page 2 of 2

Lab ID: 12-191-02
Client ID: Box-910212-2

Compound	Results	Flags	PQL
1,1,2-Trichloroethane	ND		0.0011
Tetrachloroethene	0.38		0.057
1,3-Dichloropropane	ND		0.0011
Dibromochloromethane	ND		0.0011
1,2-Dibromoethane	ND		0.0011
Chlorobenzene	ND		0.0011
1,1,1,2-Tetrachloroethane	ND		0.0011
Bromoform	ND		0.0011
Bromobenzene	ND		0.0011
1,1,2,2-Tetrachloroethane	ND		0.0011
1,2,3-Trichloropropane	ND		0.0011
2-Chlorotoluene	ND		0.0011
4-Chlorotoluene	ND		0.0011
1,3-Dichlorobenzene	ND		0.0011
1,4-Dichlorobenzene	ND		0.0011
1,2-Dichlorobenzene	ND		0.0011
1,2-Dibromo-3-chloropropane	ND		0.0057
1,2,4-Trichlorobenzene	ND		0.0011
Hexachlorobutadiene	ND		0.0057
1,2,3-Trichlorobenzene	ND		0.0011

Surrogate	Percent Recovery	Control Limits
Dibromofluoromethane	92	71-126
Toluene, d8	85	73-130
4-Bromofluorobenzene	96	70-130

This report pertains to the samples analyzed in accordance with the chain of custody,
and is intended only for the use of the individual or company to whom it is addressed.

Date of Report: December 21, 2006
Samples Submitted: December 20, 2006
Laboratory Reference: 0612-191
Project: 663-010

HALOGENATED VOLATILES by EPA 8260B
page 1 of 2

Date Extracted: 12-20-06
Date Analyzed: 12-20-06

Matrix: Soil
Units: mg/kg (ppm)

Lab ID: 12-191-03
Client ID: Box-910204-1

Compound	Results	Flags	PQL
Dichlorodifluoromethane	ND		0.0011
Chloromethane	ND		0.0011
Vinyl Chloride	ND		0.0011
Bromomethane	ND		0.0011
Chloroethane	ND		0.0054
Trichlorofluoromethane	ND		0.0011
1,1-Dichloroethene	ND		0.0011
Iodomethane	ND		0.0054
Methylene Chloride	ND		0.0054
(trans) 1,2-Dichloroethene	ND		0.0011
1,1-Dichloroethane	ND		0.0011
2,2-Dichloropropane	ND		0.0011
(cis) 1,2-Dichloroethene	ND		0.0011
Bromochloromethane	ND		0.0011
Chloroform	ND		0.0011
1,1,1-Trichloroethane	ND		0.0011
Carbon Tetrachloride	ND		0.0011
1,1-Dichloropropene	ND		0.0011
1,2-Dichloroethane	ND		0.0011
Trichloroethene	ND		0.0011
1,2-Dichloropropane	ND		0.0011
Dibromomethane	ND		0.0011
Bromodichloromethane	ND		0.0011
2-Chloroethyl Vinyl Ether	ND		0.0054
(cis) 1,3-Dichloropropene	ND		0.0011
(trans) 1,3-Dichloropropene	ND		0.0011

This report pertains to the samples analyzed in accordance with the chain of custody,
and is intended only for the use of the individual or company to whom it is addressed.

Date of Report: December 21, 2006
Samples Submitted: December 20, 2006
Laboratory Reference: 0612-191
Project: 663-010

HALOGENATED VOLATILES by EPA 8260B
page 2 of 2

Lab ID: 12-191-03
Client ID: Box-910204-1

Compound	Results	Flags	PQL
1,1,2-Trichloroethane	ND		0.0011
Tetrachloroethene	0.081		0.0011
1,3-Dichloropropane	ND		0.0011
Dibromochloromethane	ND		0.0011
1,2-Dibromoethane	ND		0.0011
Chlorobenzene	ND		0.0011
1,1,1,2-Tetrachloroethane	ND		0.0011
Bromoform	ND		0.0011
Bromobenzene	ND		0.0011
1,1,2,2-Tetrachloroethane	ND		0.0011
1,2,3-Trichloropropane	ND		0.0011
2-Chlorotoluene	ND		0.0011
4-Chlorotoluene	ND		0.0011
1,3-Dichlorobenzene	ND		0.0011
1,4-Dichlorobenzene	ND		0.0011
1,2-Dichlorobenzene	ND		0.0011
1,2-Dibromo-3-chloropropane	ND		0.0054
1,2,4-Trichlorobenzene	ND		0.0011
Hexachlorobutadiene	ND		0.0054
1,2,3-Trichlorobenzene	ND		0.0011

Surrogate	Percent Recovery	Control Limits
Dibromofluoromethane	94	71-126
Toluene, d8	90	73-130
4-Bromofluorobenzene	101	70-130

This report pertains to the samples analyzed in accordance with the chain of custody,
and is intended only for the use of the individual or company to whom it is addressed.

Date of Report: December 21, 2006
Samples Submitted: December 20, 2006
Laboratory Reference: 0612-191
Project: 663-010

HALOGENATED VOLATILES by EPA 8260B
page 1 of 2

Date Extracted: 12-20-06
Date Analyzed: 12-20-06

Matrix: Soil
Units: mg/kg (ppm)

Lab ID: 12-191-04
Client ID: Box-910204-2

Compound	Results	Flags	PQL
Dichlorodifluoromethane	0.0025		0.0010
Chloromethane	ND		0.0010
Vinyl Chloride	ND		0.0010
Bromomethane	ND		0.0010
Chloroethane	ND		0.0051
Trichlorofluoromethane	ND		0.0010
1,1-Dichloroethene	ND		0.0010
Iodomethane	ND		0.0051
Methylene Chloride	ND		0.0051
(trans) 1,2-Dichloroethene	ND		0.0010
1,1-Dichloroethane	ND		0.0010
2,2-Dichloropropane	ND		0.0010
(cis) 1,2-Dichloroethene	ND		0.0010
Bromochloromethane	ND		0.0010
Chloroform	ND		0.0010
1,1,1-Trichloroethane	ND		0.0010
Carbon Tetrachloride	ND		0.0010
1,1-Dichloropropene	ND		0.0010
1,2-Dichloroethane	ND		0.0010
Trichloroethene	ND		0.0010
1,2-Dichloropropane	ND		0.0010
Dibromomethane	ND		0.0010
Bromodichloromethane	ND		0.0010
2-Chloroethyl Vinyl Ether	ND		0.0051
(cis) 1,3-Dichloropropene	ND		0.0010
(trans) 1,3-Dichloropropene	ND		0.0010

This report pertains to the samples analyzed in accordance with the chain of custody,
and is intended only for the use of the individual or company to whom it is addressed.

Date of Report: December 21, 2006
Samples Submitted: December 20, 2006
Laboratory Reference: 0612-191
Project: 663-010

HALOGENATED VOLATILES by EPA 8260B
page 2 of 2

Lab ID: 12-191-04
Client ID: Box-910204-2

Compound	Results	Flags	PQL
1,1,2-Trichloroethane	ND		0.0010
Tetrachloroethene	0.42		0.051
1,3-Dichloropropane	ND		0.0010
Dibromochloromethane	ND		0.0010
1,2-Dibromoethane	ND		0.0010
Chlorobenzene	ND		0.0010
1,1,1,2-Tetrachloroethane	ND		0.0010
Bromoform	ND		0.0010
Bromobenzene	ND		0.0010
1,1,2,2-Tetrachloroethane	ND		0.0010
1,2,3-Trichloropropane	ND		0.0010
2-Chlorotoluene	ND		0.0010
4-Chlorotoluene	ND		0.0010
1,3-Dichlorobenzene	ND		0.0010
1,4-Dichlorobenzene	ND		0.0010
1,2-Dichlorobenzene	ND		0.0010
1,2-Dibromo-3-chloropropane	ND		0.0051
1,2,4-Trichlorobenzene	ND		0.0010
Hexachlorobutadiene	ND		0.0051
1,2,3-Trichlorobenzene	ND		0.0010

Surrogate	Percent Recovery	Control Limits
Dibromofluoromethane	89	71-126
Toluene, d8	88	73-130
4-Bromofluorobenzene	99	70-130

This report pertains to the samples analyzed in accordance with the chain of custody,
and is intended only for the use of the individual or company to whom it is addressed.

Date of Report: December 21, 2006
Samples Submitted: December 20, 2006
Laboratory Reference: 0612-191
Project: 663-010

HALOGENATED VOLATILES by EPA 8260B
METHOD BLANK QUALITY CONTROL
page 1 of 2

Date Extracted: 12-20-06
Date Analyzed: 12-20-06

Matrix: Soil
Units: mg/kg (ppm)

Lab ID: MB1220S1

Compound	Results	Flags	PQL
Dichlorodifluoromethane	ND		0.0010
Chloromethane	ND		0.0010
Vinyl Chloride	ND		0.0010
Bromomethane	ND		0.0010
Chloroethane	ND		0.0050
Trichlorofluoromethane	ND		0.0010
1,1-Dichloroethene	ND		0.0010
Iodomethane	ND		0.0050
Methylene Chloride	ND		0.0050
(trans) 1,2-Dichloroethene	ND		0.0010
1,1-Dichloroethane	ND		0.0010
2,2-Dichloropropane	ND		0.0010
(cis) 1,2-Dichloroethene	ND		0.0010
Bromochloromethane	ND		0.0010
Chloroform	ND		0.0010
1,1,1-Trichloroethane	ND		0.0010
Carbon Tetrachloride	ND		0.0010
1,1-Dichloropropene	ND		0.0010
1,2-Dichloroethane	ND		0.0010
Trichloroethene	ND		0.0010
1,2-Dichloropropane	ND		0.0010
Dibromomethane	ND		0.0010
Bromodichloromethane	ND		0.0010
2-Chloroethyl Vinyl Ether	ND		0.0050
(cis) 1,3-Dichloropropene	ND		0.0010
(trans) 1,3-Dichloropropene	ND		0.0010

This report pertains to the samples analyzed in accordance with the chain of custody,
and is intended only for the use of the individual or company to whom it is addressed.

Date of Report: December 21, 2006
Samples Submitted: December 20, 2006
Laboratory Reference: 0612-191
Project: 663-010

HALOGENATED VOLATILES by EPA 8260B
METHOD BLANK QUALITY CONTROL
page 2 of 2

Lab ID: MB1220S1

Compound	Results	Flags	PQL
1,1,2-Trichloroethane	ND		0.0010
Tetrachloroethene	ND		0.0010
1,3-Dichloropropane	ND		0.0010
Dibromochloromethane	ND		0.0010
1,2-Dibromoethane	ND		0.0010
Chlorobenzene	ND		0.0010
1,1,1,2-Tetrachloroethane	ND		0.0010
Bromoform	ND		0.0010
Bromobenzene	ND		0.0010
1,1,2,2-Tetrachloroethane	ND		0.0010
1,2,3-Trichloropropane	ND		0.0010
2-Chlorotoluene	ND		0.0010
4-Chlorotoluene	ND		0.0010
1,3-Dichlorobenzene	ND		0.0010
1,4-Dichlorobenzene	ND		0.0010
1,2-Dichlorobenzene	ND		0.0010
1,2-Dibromo-3-chloropropane	ND		0.0050
1,2,4-Trichlorobenzene	ND		0.0010
Hexachlorobutadiene	ND		0.0050
1,2,3-Trichlorobenzene	ND		0.0010

Surrogate	Percent Recovery	Control Limits
Dibromofluoromethane	87	71-126
Toluene, d8	93	73-130
4-Bromofluorobenzene	105	70-130

This report pertains to the samples analyzed in accordance with the chain of custody,
and is intended only for the use of the individual or company to whom it is addressed.

Date of Report: December 21, 2006
Samples Submitted: December 20, 2006
Laboratory Reference: 0612-191
Project: 663-010

HALOGENATED VOLATILES by EPA 8260B
SB/SBD QUALITY CONTROL

Date Extracted: 12-20-06
Date Analyzed: 12-20-06

Matrix: Soil
Units: mg/kg (ppm)

Lab ID: SB1220S1

Compound	Spike Amount	SB	Percent Recovery	SBD	Percent Recovery	Recovery Limits	Flags
1,1-Dichloroethene	0.0500	0.0429	86	0.0455	91	70-130	
Benzene	0.0500	0.0463	93	0.0492	98	70-130	
Trichloroethene	0.0500	0.0427	85	0.0432	86	70-130	
Toluene	0.0500	0.0473	95	0.0461	92	70-130	
Chlorobenzene	0.0500	0.0492	98	0.0482	96	70-130	

	RPD	RPD Limit	Flags
1,1-Dichloroethene	6	11	
Benzene	6	11	
Trichloroethene	1	13	
Toluene	2	11	
Chlorobenzene	2	12	

This report pertains to the samples analyzed in accordance with the chain of custody,
and is intended only for the use of the individual or company to whom it is addressed.

Date of Report: December 21, 2006
Samples Submitted: December 20, 2006
Laboratory Reference: 0612-191
Project: 663-010

% MOISTURE

Date Analyzed: 12-20-06

Client ID	Lab ID	% Moisture
Box-910212-1	12-191-01	15
Box-910212-2	12-191-02	19
Box-910204-1	12-191-03	21
Box-910204-2	12-191-04	17

This report pertains to the samples analyzed in accordance with the chain of custody,
and is intended only for the use of the individual or company to whom it is addressed.

OnSite Environmental Inc.

Data Qualifiers and Abbreviations

A - Due to a high sample concentration, the amount spiked is insufficient for meaningful MS/MSD recovery data.

B - The analyte indicated was also found in the blank sample.

C - The duplicate RPD is outside control limits due to high result variability when analyte concentrations are within five times the quantitation limit.

E - The value reported exceeds the quantitation range and is an estimate.

F - Surrogate recovery data is not available due to the high concentration of coeluting target compounds.

G - Insufficient sample quantity for duplicate analysis.

H - The analyte indicated is a common laboratory solvent and may have been introduced during sample preparation, and be impacting the sample result.

I - Compound recovery is outside of the control limits.

J - The value reported was below the practical quantitation limit. The value is an estimate.

K - Sample duplicate RPD is outside control limits due to sample inhomogeneity. The sample was re-extracted and re-analyzed with similar results.

L - The RPD is outside of the control limits.

M - Hydrocarbons in the gasoline range (toluene-napthalene) are present in the sample.

O - Hydrocarbons indicative of diesel fuel are present in the sample and are impacting the gasoline result.

P - The RPD of the detected concentrations between the two columns is greater than 40.

Q - Surrogate recovery is outside of the control limits.

S - Surrogate recovery data is not available due to the necessary dilution of the sample.

T - The sample chromatogram is not similar to a typical _____.

U - The analyte was analyzed for, but was not detected above the reported sample quantitation limit.

V - Matrix Spike/Matrix Spike Duplicate recoveries are outside control limits due to matrix effects.

W - Matrix Spike/Matrix Spike Duplicate RPD are outside control limits due to matrix effects.

X - Sample extract treated with a silica gel cleanup procedure.

Y - Sample extract treated with an acid/silica gel cleanup procedure.

Z -

ND - Not Detected at PQL
PQL - Practical Quantitation Limit
RPD - Relative Percent Difference

This report pertains to the samples analyzed in accordance with the chain of custody, and is intended only for the use of the individual or company to whom it is addressed.

Chain of Custody

Page 1 of 1

OnSite Environmental Inc.
14648 NE 95th Street • Redmond, WA 98052
Phone: (425) 883-3881 • Fax: (425) 885-4603

Company: Farallon Consulting
Project Number: 663-010
Project Name: Allison's Norge Village
Project Manager: C. Brock
Sampled by: F. Reider

Turnaround Request (in working days)

(Check One)

- ☑ Same Day
- ☐ 1 Day
- ☐ 2 Day
- ☐ 3 Day
- ☐ Standard (7 working days) (TPH analysis 5 working days)
- ☐ _____ (other)

Laboratory Number: 12-191

Requested Analysis

Lab ID	Sample Identification	Date Sampled	Time Sampled	Matrix	# of Cont.	NWTPH-HCID	NWTPH-Gx/BTEX	NWTPH-Dx	Volatiles by 8260B	Halogenated Volatiles by 8260B	Semivolatiles by 8270C	PAHs by 8270C / SIM	PCBs by 8082	Pesticides by 8081A	Herbicides by 8151A	Total RCRA Metals (8)	TCLP Metals	HEM by 1664	VPH	EPH	% Moisture
1	Box-910212-1	12/9/06	0930	S	4					X											X
2	Box-910212-2	12/9/06	0935	S	4					X											↓
3	Box-910204-1	12/9/06	1120	S	4					X											
4	Box-910204-2	12/9/06	1125	S	4					X											

S 1R

	Signature	Company	Date	Time
Relinquished by		Farallon	12/9/06	1155
Received by		OSE	12/10/06	1130
Relinquished by				
Received by				
Relinquished by				
Received by				

Comments/Special Instructions:

Reviewed by/Date

Reviewed by/Date

Chromatograms with final report ☐

DISTRIBUTION LEGEND: White - OnSite Copy Yellow - Report Copy Pink - Client Copy

OnSite Environmental Inc.
14648 NE 95th Street, Redmond, WA 98052 • (425) 883-3881

December 20, 2006

Carla Brock
Farallon Consulting, LLC
975 5th Avenue NW
Issaquah, WA 98027

Re: Analytical Data for Project 663-010
Laboratory Reference No. 0612-170

Dear Carla:

Enclosed are the analytical results and associated quality control data for samples submitted on December 19, 2006.

The standard policy of OnSite Environmental Inc. is to store your samples for 30 days from the date of receipt. If you require longer storage, please contact the laboratory.

We appreciate the opportunity to be of service to you on this project. If you have any questions concerning the data, or need additional information, please feel free to call me.

Sincerely,

David Baumeister
Project Manager

Enclosures

This report pertains to the samples analyzed in accordance with the chain of custody, and is intended only for the use of the individual or company to whom it is addressed.

Date of Report: December 20, 2006
Samples Submitted: December 19, 2006
Laboratory Reference: 0612-170
Project: 663-010

Case Narrative

Samples were collected on December 18, 2006 and received by the laboratory on December 19, 2006. They were maintained at the laboratory at a temperature of 2°C to 6°C except as noted below.

General QA/QC issues associated with the analytical data enclosed in this laboratory report will be indicated with a reference to a comment or explanation on the Data Qualifier page. More complex and involved QA/QC issues will be discussed in detail below.

Halogenated Volatiles EPA 8260B Analysis

Per EPA Method 5035A, samples were received by the laboratory in pre-weighed 40 mL VOA vials within 48 hours of sample collection. They were stored in a freezer at between -7°C and -20°C until extraction or analysis.

All four internal standards did not meet acceptance criteria for samples Box-910213-1 and Box-910213-2. The samples were re-analyzed with similar results. Leaks in the sealed VOA environment caused by grit between the VOA lip and VOA cap septum has been shown to cause low internal standard recovery. The samples were consequently analyzed by high-level method and reported. Some MTCA cleanup levels are therefore non-achievable.

Any other QA/QC issues associated with this extraction and analysis will be indicated with a footnote reference and discussed in detail on the Data Qualifier page.

This report pertains to the samples analyzed in accordance with the chain of custody, and is intended only for the use of the individual or company to whom it is addressed.

Date of Report: December 20, 2006
Samples Submitted: December 19, 2006
Laboratory Reference: 0612-170
Project: 663-010

HALOGENATED VOLATILES by EPA 8260B
page 1 of 2

Date Extracted: 12-19-06
Date Analyzed: 12-19-06

Matrix: Soil
Units: mg/kg (ppm)

Lab ID: 12-170-01
Client ID: Box-910213-1

Compound	Results	Flags	PQL
Dichlorodifluoromethane	ND		0.047
Chloromethane	ND		0.047
Vinyl Chloride	ND		0.047
Bromomethane	ND		0.047
Chloroethane	ND		0.24
Trichlorofluoromethane	ND		0.047
1,1-Dichloroethene	ND		0.047
Iodomethane	ND		0.24
Methylene Chloride	ND		0.24
(trans) 1,2-Dichloroethene	ND		0.047
1,1-Dichloroethane	ND		0.047
2,2-Dichloropropane	ND		0.047
(cis) 1,2-Dichloroethene	ND		0.047
Bromochloromethane	ND		0.047
Chloroform	ND		0.047
1,1,1-Trichloroethane	ND		0.047
Carbon Tetrachloride	ND		0.047
1,1-Dichloropropene	ND		0.047
1,2-Dichloroethane	ND		0.047
Trichloroethene	ND		0.047
1,2-Dichloropropane	ND		0.047
Dibromomethane	ND		0.047
Bromodichloromethane	ND		0.047
2-Chloroethyl Vinyl Ether	ND		0.24
(cis) 1,3-Dichloropropene	ND		0.047
(trans) 1,3-Dichloropropene	ND		0.047

This report pertains to the samples analyzed in accordance with the chain of custody,
and is intended only for the use of the individual or company to whom it is addressed.

Date of Report: December 20, 2006
Samples Submitted: December 19, 2006
Laboratory Reference: 0612-170
Project: 663-010

HALOGENATED VOLATILES by EPA 8260B
page 2 of 2

Lab ID: 12-170-01
Client ID: Box-910213-1

Compound	Results	Flags	PQL
1,1,2-Trichloroethane	ND		0.047
Tetrachloroethene	ND		0.047
1,3-Dichloropropane	ND		0.047
Dibromochloromethane	ND		0.047
1,2-Dibromoethane	ND		0.047
Chlorobenzene	ND		0.047
1,1,1,2-Tetrachloroethane	ND		0.047
Bromoform	ND		0.047
Bromobenzene	ND		0.047
1,1,2,2-Tetrachloroethane	ND		0.047
1,2,3-Trichloropropane	ND		0.047
2-Chlorotoluene	ND		0.047
4-Chlorotoluene	ND		0.047
1,3-Dichlorobenzene	ND		0.047
1,4-Dichlorobenzene	ND		0.047
1,2-Dichlorobenzene	ND		0.047
1,2-Dibromo-3-chloropropane	ND		0.24
1,2,4-Trichlorobenzene	ND		0.047
Hexachlorobutadiene	ND		0.24
1,2,3-Trichlorobenzene	ND		0.047

Surrogate	Percent Recovery	Control Limits
Dibromofluoromethane	87	71-126
Toluene, d8	87	73-130
4-Bromofluorobenzene	93	70-130

This report pertains to the samples analyzed in accordance with the chain of custody,
and is intended only for the use of the individual or company to whom it is addressed.

Date of Report: December 20, 2006
Samples Submitted: December 19, 2006
Laboratory Reference: 0612-170
Project: 663-010

HALOGENATED VOLATILES by EPA 8260B
page 1 of 2

Date Extracted: 12-19-06
Date Analyzed: 12-19-06

Matrix: Soil
Units: mg/kg (ppm)

Lab ID: 12-170-02
Client ID: Box-910213-2

Compound	Results	Flags	PQL
Dichlorodifluoromethane	ND		0.058
Chloromethane	ND		0.058
Vinyl Chloride	ND		0.058
Bromomethane	ND		0.058
Chloroethane	ND		0.29
Trichlorofluoromethane	ND		0.058
1,1-Dichloroethene	ND		0.058
Iodomethane	ND		0.29
Methylene Chloride	ND		0.29
(trans) 1,2-Dichloroethene	ND		0.058
1,1-Dichloroethane	ND		0.058
2,2-Dichloropropane	ND		0.058
(cis) 1,2-Dichloroethene	ND		0.058
Bromochloromethane	ND		0.058
Chloroform	ND		0.058
1,1,1-Trichloroethane	ND		0.058
Carbon Tetrachloride	ND		0.058
1,1-Dichloropropene	ND		0.058
1,2-Dichloroethane	ND		0.058
Trichloroethene	ND		0.058
1,2-Dichloropropane	ND		0.058
Dibromomethane	ND		0.058
Bromodichloromethane	ND		0.058
2-Chloroethyl Vinyl Ether	ND		0.29
(cis) 1,3-Dichloropropene	ND		0.058
(trans) 1,3-Dichloropropene	ND		0.058

This report pertains to the samples analyzed in accordance with the chain of custody,
and is intended only for the use of the individual or company to whom it is addressed.

Date of Report: December 20, 2006
Samples Submitted: December 19, 2006
Laboratory Reference: 0612-170
Project: 663-010

HALOGENATED VOLATILES by EPA 8260B
page 2 of 2

Lab ID: 12-170-02
Client ID: Box-910213-2

Compound	Results	Flags	PQL
1,1,2-Trichloroethane	ND		0.058
Tetrachloroethene	ND		0.058
1,3-Dichloropropane	ND		0.058
Dibromochloromethane	ND		0.058
1,2-Dibromoethane	ND		0.058
Chlorobenzene	ND		0.058
1,1,1,2-Tetrachloroethane	ND		0.058
Bromoform	ND		0.058
Bromobenzene	ND		0.058
1,1,2,2-Tetrachloroethane	ND		0.058
1,2,3-Trichloropropane	ND		0.058
2-Chlorotoluene	ND		0.058
4-Chlorotoluene	ND		0.058
1,3-Dichlorobenzene	ND		0.058
1,4-Dichlorobenzene	ND		0.058
1,2-Dichlorobenzene	ND		0.058
1,2-Dibromo-3-chloropropane	ND		0.29
1,2,4-Trichlorobenzene	ND		0.058
Hexachlorobutadiene	ND		0.29
1,2,3-Trichlorobenzene	ND		0.058

Surrogate	Percent Recovery	Control Limits
Dibromofluoromethane	87	71-126
Toluene, d8	85	73-130
4-Bromofluorobenzene	92	70-130

This report pertains to the samples analyzed in accordance with the chain of custody,
and is intended only for the use of the individual or company to whom it is addressed.

Date of Report: December 20, 2006
Samples Submitted: December 19, 2006
Laboratory Reference: 0612-170
Project: 663-010

HALOGENATED VOLATILES by EPA 8260B
METHOD BLANK QUALITY CONTROL
page 1 of 2

Date Extracted: 12-19-06
Date Analyzed: 12-19-06

Matrix: Soil
Units: mg/kg (ppm)

Lab ID: MB1219S1

Compound	Results	Flags	PQL
Dichlorodifluoromethane	ND		0.0010
Chloromethane	ND		0.0010
Vinyl Chloride	ND		0.0010
Bromomethane	ND		0.0010
Chloroethane	ND		0.0050
Trichlorofluoromethane	ND		0.0010
1,1-Dichloroethene	ND		0.0010
Iodomethane	ND		0.0050
Methylene Chloride	ND		0.0050
(trans) 1,2-Dichloroethene	ND		0.0010
1,1-Dichloroethane	ND		0.0010
2,2-Dichloropropane	ND		0.0010
(cis) 1,2-Dichloroethene	ND		0.0010
Bromochloromethane	ND		0.0010
Chloroform	ND		0.0010
1,1,1-Trichloroethane	ND		0.0010
Carbon Tetrachloride	ND		0.0010
1,1-Dichloropropene	ND		0.0010
1,2-Dichloroethane	ND		0.0010
Trichloroethene	ND		0.0010
1,2-Dichloropropane	ND		0.0010
Dibromomethane	ND		0.0010
Bromodichloromethane	ND		0.0010
2-Chloroethyl Vinyl Ether	ND		0.0050
(cis) 1,3-Dichloropropene	ND		0.0010
(trans) 1,3-Dichloropropene	ND		0.0010

This report pertains to the samples analyzed in accordance with the chain of custody,
and is intended only for the use of the individual or company to whom it is addressed.

Date of Report: December 20, 2006
Samples Submitted: December 19, 2006
Laboratory Reference: 0612-170
Project: 663-010

HALOGENATED VOLATILES by EPA 8260B
METHOD BLANK QUALITY CONTROL
page 2 of 2

Lab ID: MB1219S1

Compound	Results	Flags	PQL
1,1,2-Trichloroethane	ND		0.0010
Tetrachloroethene	ND		0.0010
1,3-Dichloropropane	ND		0.0010
Dibromochloromethane	ND		0.0010
1,2-Dibromoethane	ND		0.0010
Chlorobenzene	ND		0.0010
1,1,1,2-Tetrachloroethane	ND		0.0010
Bromoform	ND		0.0010
Bromobenzene	ND		0.0010
1,1,2,2-Tetrachloroethane	ND		0.0010
1,2,3-Trichloropropane	ND		0.0010
2-Chlorotoluene	ND		0.0010
4-Chlorotoluene	ND		0.0010
1,3-Dichlorobenzene	ND		0.0010
1,4-Dichlorobenzene	ND		0.0010
1,2-Dichlorobenzene	ND		0.0010
1,2-Dibromo-3-chloropropane	ND		0.0050
1,2,4-Trichlorobenzene	ND		0.0010
Hexachlorobutadiene	ND		0.0050
1,2,3-Trichlorobenzene	ND		0.0010

Surrogate	Percent Recovery	Control Limits
Dibromofluoromethane	88	71-126
Toluene, d8	93	73-130
4-Bromofluorobenzene	98	70-130

This report pertains to the samples analyzed in accordance with the chain of custody,
and is intended only for the use of the individual or company to whom it is addressed.

Date of Report: December 20, 2006
Samples Submitted: December 19, 2006
Laboratory Reference: 0612-170
Project: 663-010

HALOGENATED VOLATILES by EPA 8260B
SB/SBD QUALITY CONTROL

Date Extracted: 12-19-06
Date Analyzed: 12-19-06

Matrix: Soil
Units: mg/kg (ppm)

Lab ID: SB1219S1

Compound	Spike Amount	SB	Percent Recovery	SBD	Percent Recovery	Recovery Limits	Flags
1,1-Dichloroethene	0.0500	0.0420	84	0.0435	87	70-130	
Benzene	0.0500	0.0435	87	0.0459	92	70-130	
Trichloroethene	0.0500	0.0444	89	0.0449	90	70-130	
Toluene	0.0500	0.0471	94	0.0489	98	70-130	
Chlorobenzene	0.0500	0.0482	96	0.0494	99	70-130	

	RPD	RPD Limit	Flags
1,1-Dichloroethene	4	11	
Benzene	5	11	
Trichloroethene	1	13	
Toluene	4	11	
Chlorobenzene	3	12	

This report pertains to the samples analyzed in accordance with the chain of custody,
and is intended only for the use of the individual or company to whom it is addressed.

Date of Report: December 20, 2006
Samples Submitted: December 19, 2006
Laboratory Reference: 0612-170
Project: 663-010

% MOISTURE

Date Analyzed: 12-19-06

Client ID	Lab ID	% Moisture
BOX-910213-1	12-170-01	18
BOX-910213-2	12-170-02	18

This report pertains to the samples analyzed in accordance with the chain of custody,
and is intended only for the use of the individual or company to whom it is addressed.

OnSite Environmental Inc.

Data Qualifiers and Abbreviations

A - Due to a high sample concentration, the amount spiked is insufficient for meaningful MS/MSD recovery data.

B - The analyte indicated was also found in the blank sample.

C - The duplicate RPD is outside control limits due to high result variability when analyte concentrations are within five times the quantitation limit.

E - The value reported exceeds the quantitation range and is an estimate.

F - Surrogate recovery data is not available due to the high concentration of coeluting target compounds.

G - Insufficient sample quantity for duplicate analysis.

H - The analyte indicated is a common laboratory solvent and may have been introduced during sample preparation, and be impacting the sample result.

I - Compound recovery is outside of the control limits.

J - The value reported was below the practical quantitation limit. The value is an estimate.

K - Sample duplicate RPD is outside control limits due to sample inhomogeneity. The sample was re-extracted and re-analyzed with similar results.

L - The RPD is outside of the control limits.

M - Hydrocarbons in the gasoline range (toluene-napthalene) are present in the sample.

O - Hydrocarbons indicative of diesel fuel are present in the sample and are impacting the gasoline result.

P - The RPD of the detected concentrations between the two columns is greater than 40.

Q - Surrogate recovery is outside of the control limits.

S - Surrogate recovery data is not available due to the necessary dilution of the sample.

T - The sample chromatogram is not similar to a typical _____.

U - The analyte was analyzed for, but was not detected above the reported sample quantitation limit.

V - Matrix Spike/Matrix Spike Duplicate recoveries are outside control limits due to matrix effects.

W - Matrix Spike/Matrix Spike Duplicate RPD are outside control limits due to matrix effects.

X - Sample extract treated with a silica gel cleanup procedure.

Y - Sample extract treated with an acid/silica gel cleanup procedure.

Z -

ND - Not Detected at PQL
PQL - Practical Quantitation Limit
RPD - Relative Percent Difference

This report pertains to the samples analyzed in accordance with the chain of custody, and is intended only for the use of the individual or company to whom it is addressed.

Chain of Custody

Page 1 of 1

OnSite Environmental Inc.
14648 NE 95th Street • Redmond, WA 98052
Phone: (425) 883-3881 • Fax: (425) 885-4603

Company: Farallon Consulting
Project Number: 663-010
Project Name: Allison's Norge Village
Project Manager: C. Brock
Sampled by: F. Reider

Turnaround Request (in working days)
(Check One)
☒ Same Day ☐ 1 Day
☐ 2 Day ☐ 3 Day
☐ Standard (7 working days)
(TPH analysis 5 working days)
☐ _____ (other)

Laboratory Number: 12-170

Requested Analysis

Lab ID	Sample Identification	Date Sampled	Time Sampled	Matrix	# of Cont.	NWTPH-HCID	NWTPH-Gx/BTEX	NWTPH-Dx	Volatiles by 8260B	Halogenated Volatiles by 8260B	Semivolatiles by 8270C	PAHs by 8270C / SIM	PCBs by 8082	Pesticides by 8081A	Herbicides by 8151A	Total RCRA Metals (8)	TCLP Metals	HEM by 1664	VPH	EPH					% Moisture
1	Box-910213-1	12/18/06	0820	S	4					X															X
2	Box-910213-2	12/18/06	0825	S	4					X															↓

F I R

	Signature	Company	Date	Time	Comments/Special Instructions:
Relinquished by		Farallon	12/18/06	0903	
Received by			12/18/06	1015	
Relinquished by					
Received by					
Relinquished by					
Received by					
Reviewed by/Date		Reviewed by/Date			Chromatograms with final report ☐

DISTRIBUTION LEGEND: White - OnSite Copy Yellow - Report Copy Pink - Client Copy

OnSite Environmental Inc.
14648 NE 95th Street, Redmond, WA 98052 • (425) 883-3881

December 12, 2006

Carla Brock
Farallon Consulting, LLC
975 5th Avenue NW
Issaquah, WA 98027

Re: Analytical Data for Project 663-010
Laboratory Reference No. 0612-090

Dear Carla:

Enclosed are the analytical results and associated quality control data for samples submitted on December 9, 2006.

The standard policy of OnSite Environmental Inc. is to store your samples for 30 days from the date of receipt. If you require longer storage, please contact the laboratory.

We appreciate the opportunity to be of service to you on this project. If you have any questions concerning the data, or need additional information, please feel free to call me.

Sincerely,

David Baumeister
Project Manager

Enclosures

This report pertains to the samples analyzed in accordance with the chain of custody, and is intended only for the use of the individual or company to whom it is addressed.

Date of Report: December 12, 2006
Samples Submitted: December 9, 2006
Laboratory Reference: 0612-090
Project: 663-010

Case Narrative

Samples were collected on December 8, 2006 and received by the laboratory on December 9, 2006. They were maintained at the laboratory at a temperature of 2°C to 6°C except as noted below.

General QA/QC issues associated with the analytical data enclosed in this laboratory report will be indicated with a reference to a comment or explanation on the Data Qualifier page. More complex and involved QA/QC issues will be discussed in detail below.

Halogenated Volatiles EPA 8260B Analysis

Per EPA Method 5035A, samples were received by the laboratory in pre-weighed 40 mL VOA vials within 48 hours of sample collection. They were stored in a freezer at between -7°C and -20°C until extraction or analysis.

Any other QA/QC issues associated with this extraction and analysis will be indicated with a footnote reference and discussed in detail on the Data Qualifier page.

This report pertains to the samples analyzed in accordance with the chain of custody, and is intended only for the use of the individual or company to whom it is addressed.

Date of Report: December 12, 2006
Samples Submitted: December 9, 2006
Laboratory Reference: 0612-090
Project: 663-010

HALOGENATED VOLATILES by EPA 8260B
page 1 of 2

Date Extracted: 12-11-06
Date Analyzed: 12-11-06

Matrix: Soil
Units: mg/kg (ppm)

Lab ID: 12-090-01
Client ID: BOX-8527-1

Compound	Results	Flags	PQL
Dichlorodifluoromethane	ND		0.00096
Chloromethane	ND		0.0048
Vinyl Chloride	ND		0.0048
Bromomethane	ND		0.0048
Chloroethane	ND		0.0048
Trichlorofluoromethane	ND		0.00096
1,1-Dichloroethene	ND		0.00096
Iodomethane	ND		0.0048
Methylene Chloride	ND		0.0048
(trans) 1,2-Dichloroethene	ND		0.00096
1,1-Dichloroethane	ND		0.00096
2,2-Dichloropropane	ND		0.00096
(cis) 1,2-Dichloroethene	ND		0.00096
Bromochloromethane	ND		0.00096
Chloroform	ND		0.00096
1,1,1-Trichloroethane	ND		0.00096
Carbon Tetrachloride	ND		0.00096
1,1-Dichloropropene	ND		0.00096
1,2-Dichloroethane	ND		0.00096
Trichloroethene	ND		0.00096
1,2-Dichloropropane	ND		0.00096
Dibromomethane	ND		0.00096
Bromodichloromethane	ND		0.00096
2-Chloroethyl Vinyl Ether	ND		0.0048
(cis) 1,3-Dichloropropene	ND		0.00096
(trans) 1,3-Dichloropropene	ND		0.00096

This report pertains to the samples analyzed in accordance with the chain of custody,
and is intended only for the use of the individual or company to whom it is addressed.

Date of Report: December 12, 2006
Samples Submitted: December 9, 2006
Laboratory Reference: 0612-090
Project: 663-010

HALOGENATED VOLATILES by EPA 8260B
page 2 of 2

Lab ID: 12-090-01
Client ID: BOX-8527-1

Compound	Results	Flags	PQL
1,1,2-Trichloroethane	ND		0.00096
Tetrachloroethene	0.95		0.051
1,3-Dichloropropane	ND		0.00096
Dibromochloromethane	ND		0.00096
1,2-Dibromoethane	ND		0.00096
Chlorobenzene	ND		0.00096
1,1,1,2-Tetrachloroethane	ND		0.00096
Bromoform	ND		0.00096
Bromobenzene	ND		0.00096
1,1,2,2-Tetrachloroethane	ND		0.00096
1,2,3-Trichloropropane	ND		0.00096
2-Chlorotoluene	ND		0.00096
4-Chlorotoluene	ND		0.00096
1,3-Dichlorobenzene	ND		0.00096
1,4-Dichlorobenzene	ND		0.00096
1,2-Dichlorobenzene	ND		0.00096
1,2-Dibromo-3-chloropropane	ND		0.0048
1,2,4-Trichlorobenzene	ND		0.00096
Hexachlorobutadiene	ND		0.0048
1,2,3-Trichlorobenzene	ND		0.00096

Surrogate	Percent Recovery	Control Limits
Dibromofluoromethane	95	71-126
Toluene, d8	93	73-130
4-Bromofluorobenzene	108	70-130

This report pertains to the samples analyzed in accordance with the chain of custody,
and is intended only for the use of the individual or company to whom it is addressed.

Date of Report: December 12, 2006
Samples Submitted: December 9, 2006
Laboratory Reference: 0612-090
Project: 663-010

HALOGENATED VOLATILES by EPA 8260B
page 1 of 2

Date Extracted: 12-11-06
Date Analyzed: 12-11-06

Matrix: Soil
Units: mg/kg (ppm)

Lab ID: 12-090-02
Client ID: BOX-8527-2

Compound	Results	Flags	PQL
Dichlorodifluoromethane	ND		0.0010
Chloromethane	ND		0.0050
Vinyl Chloride	ND		0.0050
Bromomethane	ND		0.0050
Chloroethane	ND		0.0050
Trichlorofluoromethane	ND		0.0010
1,1-Dichloroethene	ND		0.0010
Iodomethane	ND		0.0050
Methylene Chloride	ND		0.0050
(trans) 1,2-Dichloroethene	ND		0.0010
1,1-Dichloroethane	ND		0.0010
2,2-Dichloropropane	ND		0.0010
(cis) 1,2-Dichloroethene	ND		0.0010
Bromochloromethane	ND		0.0010
Chloroform	ND		0.0010
1,1,1-Trichloroethane	ND		0.0010
Carbon Tetrachloride	ND		0.0010
1,1-Dichloropropene	ND		0.0010
1,2-Dichloroethane	ND		0.0010
Trichloroethene	ND		0.0010
1,2-Dichloropropane	ND		0.0010
Dibromomethane	ND		0.0010
Bromodichloromethane	ND		0.0010
2-Chloroethyl Vinyl Ether	ND		0.0050
(cis) 1,3-Dichloropropene	ND		0.0010
(trans) 1,3-Dichloropropene	ND		0.0010

This report pertains to the samples analyzed in accordance with the chain of custody,
and is intended only for the use of the individual or company to whom it is addressed.

Date of Report: December 12, 2006
Samples Submitted: December 9, 2006
Laboratory Reference: 0612-090
Project: 663-010

HALOGENATED VOLATILES by EPA 8260B
page 2 of 2

Lab ID: 12-090-02
Client ID: BOX-8527-2

Compound	Results	Flags	PQL
1,1,2-Trichloroethane	ND		0.0010
Tetrachloroethene	1.7		0.046
1,3-Dichloropropane	ND		0.0010
Dibromochloromethane	ND		0.0010
1,2-Dibromoethane	ND		0.0010
Chlorobenzene	ND		0.0010
1,1,1,2-Tetrachloroethane	ND		0.0010
Bromoform	ND		0.0010
Bromobenzene	ND		0.0010
1,1,2,2-Tetrachloroethane	ND		0.0010
1,2,3-Trichloropropane	ND		0.0010
2-Chlorotoluene	ND		0.0010
4-Chlorotoluene	ND		0.0010
1,3-Dichlorobenzene	ND		0.0010
1,4-Dichlorobenzene	ND		0.0010
1,2-Dichlorobenzene	ND		0.0010
1,2-Dibromo-3-chloropropane	ND		0.0050
1,2,4-Trichlorobenzene	ND		0.0010
Hexachlorobutadiene	ND		0.0050
1,2,3-Trichlorobenzene	ND		0.0010

Surrogate	Percent Recovery	Control Limits
Dibromofluoromethane	98	71-126
Toluene, d8	99	73-130
4-Bromofluorobenzene	103	70-130

This report pertains to the samples analyzed in accordance with the chain of custody,
and is intended only for the use of the individual or company to whom it is addressed.

Date of Report: December 12, 2006
Samples Submitted: December 9, 2006
Laboratory Reference: 0612-090
Project: 663-010

HALOGENATED VOLATILES by EPA 8260B

Date Extracted: 12-11-06
Date Analyzed: 12-11-06

Matrix: Soil
Units: mg/kg (ppm)

Lab ID: 12-090-03
Client ID: BOX-7180-1

Compound	Results	Flags	PQL
Dichlorodifluoromethane	ND		0.00089
Chloromethane	ND		0.0044
Vinyl Chloride	ND		0.0044
Bromomethane	ND		0.0044
Chloroethane	ND		0.0044
Trichlorofluoromethane	ND		0.00089
1,1-Dichloroethene	ND		0.00089
Iodomethane	ND		0.0044
Methylene Chloride	ND		0.0044
(trans) 1,2-Dichloroethene	ND		0.00089
1,1-Dichloroethane	ND		0.00089
2,2-Dichloropropane	ND		0.00089
(cis) 1,2-Dichloroethene	ND		0.00089
Bromochloromethane	ND		0.00089
Chloroform	ND		0.00089
1,1,1-Trichloroethane	ND		0.00089
Carbon Tetrachloride	ND		0.00089
1,1-Dichloropropene	ND		0.00089
1,2-Dichloroethane	ND		0.00089
Trichloroethene	ND		0.00089
1,2-Dichloropropane	ND		0.00089
Dibromomethane	ND		0.00089
Bromodichloromethane	ND		0.00089
2-Chloroethyl Vinyl Ether	ND		0.0044
(cis) 1,3-Dichloropropene	ND		0.00089
(trans) 1,3-Dichloropropene	ND		0.00089

This report pertains to the samples analyzed in accordance with the chain of custody,
and is intended only for the use of the individual or company to whom it is addressed.

Date of Report: December 12, 2006
Samples Submitted: December 9, 2006
Laboratory Reference: 0612-090
Project: 663-010

HALOGENATED VOLATILES by EPA 8260B
page 2 of 2

Lab ID: 12-090-03
Client ID: BOX-7180-1

Compound	Results	Flags	PQL
1,1,2-Trichloroethane	ND		0.00089
Tetrachloroethene	0.023		0.00089
1,3-Dichloropropane	ND		0.00089
Dibromochloromethane	ND		0.00089
1,2-Dibromoethane	ND		0.00089
Chlorobenzene	ND		0.00089
1,1,1,2-Tetrachloroethane	ND		0.00089
Bromoform	ND		0.00089
Bromobenzene	ND		0.00089
1,1,2,2-Tetrachloroethane	ND		0.00089
1,2,3-Trichloropropane	ND		0.00089
2-Chlorotoluene	ND		0.00089
4-Chlorotoluene	ND		0.00089
1,3-Dichlorobenzene	ND		0.00089
1,4-Dichlorobenzene	ND		0.00089
1,2-Dichlorobenzene	ND		0.00089
1,2-Dibromo-3-chloropropane	ND		0.0044
1,2,4-Trichlorobenzene	ND		0.00089
Hexachlorobutadiene	ND		0.0044
1,2,3-Trichlorobenzene	ND		0.00089

Surrogate	Percent Recovery	Control Limits
Dibromofluoromethane	100	71-126
Toluene, d8	103	73-130
4-Bromofluorobenzene	110	70-130

This report pertains to the samples analyzed in accordance with the chain of custody,
and is intended only for the use of the individual or company to whom it is addressed.

Date of Report: December 12, 2006
Samples Submitted: December 9, 2006
Laboratory Reference: 0612-090
Project: 663-010

HALOGENATED VOLATILES by EPA 8260B
page 1 of 2

Date Extracted: 12-11-06
Date Analyzed: 12-11-06

Matrix: Soil
Units: mg/kg (ppm)

Lab ID: 12-090-04
Client ID: BOX-7180-2

Compound	Results	Flags	PQL
Dichlorodifluoromethane	ND		0.00098
Chloromethane	ND		0.0049
Vinyl Chloride	ND		0.0049
Bromomethane	ND		0.0049
Chloroethane	ND		0.0049
Trichlorofluoromethane	ND		0.00098
1,1-Dichloroethene	ND		0.00098
Iodomethane	ND		0.0049
Methylene Chloride	ND		0.0049
(trans) 1,2-Dichloroethene	ND		0.00098
1,1-Dichloroethane	ND		0.00098
2,2-Dichloropropane	ND		0.00098
(cis) 1,2-Dichloroethene	ND		0.00098
Bromochloromethane	ND		0.00098
Chloroform	ND		0.00098
1,1,1-Trichloroethane	ND		0.00098
Carbon Tetrachloride	ND		0.00098
1,1-Dichloropropene	ND		0.00098
1,2-Dichloroethane	ND		0.00098
Trichloroethene	ND		0.00098
1,2-Dichloropropane	ND		0.00098
Dibromomethane	ND		0.00098
Bromodichloromethane	ND		0.00098
2-Chloroethyl Vinyl Ether	ND		0.0049
(cis) 1,3-Dichloropropene	ND		0.00098
(trans) 1,3-Dichloropropene	ND		0.00098

This report pertains to the samples analyzed in accordance with the chain of custody,
and is intended only for the use of the individual or company to whom it is addressed.

Date of Report: December 12, 2006
Samples Submitted: December 9, 2006
Laboratory Reference: 0612-090
Project: 663-010

HALOGENATED VOLATILES by EPA 8260B
page 2 of 2

Lab ID: 12-090-04
Client ID: BOX-7180-2

Compound	Results	Flags	PQL
1,1,2-Trichloroethane	ND		0.00098
Tetrachloroethene	0.016		0.00098
1,3-Dichloropropane	ND		0.00098
Dibromochloromethane	ND		0.00098
1,2-Dibromoethane	ND		0.00098
Chlorobenzene	ND		0.00098
1,1,1,2-Tetrachloroethane	ND		0.00098
Bromoform	ND		0.00098
Bromobenzene	ND		0.00098
1,1,2,2-Tetrachloroethane	ND		0.00098
1,2,3-Trichloropropane	ND		0.00098
2-Chlorotoluene	ND		0.00098
4-Chlorotoluene	ND		0.00098
1,3-Dichlorobenzene	ND		0.00098
1,4-Dichlorobenzene	ND		0.00098
1,2-Dichlorobenzene	ND		0.00098
1,2-Dibromo-3-chloropropane	ND		0.0049
1,2,4-Trichlorobenzene	ND		0.00098
Hexachlorobutadiene	ND		0.0049
1,2,3-Trichlorobenzene	ND		0.00098

Surrogate	Percent Recovery	Control Limits
Dibromofluoromethane	102	71-126
Toluene, d8	106	73-130
4-Bromofluorobenzene	116	70-130

This report pertains to the samples analyzed in accordance with the chain of custody,
and is intended only for the use of the individual or company to whom it is addressed.

Date of Report: December 12, 2006
Samples Submitted: December 9, 2006
Laboratory Reference: 0612-090
Project: 663-010

HALOGENATED VOLATILES by EPA 8260B
METHOD BLANK QUALITY CONTROL
page 1 of 2

Date Extracted: 12-11-06
Date Analyzed: 12-11-06

Matrix: Soil
Units: mg/kg (ppm)

Lab ID: MB1211S1

Compound	Results	Flags	PQL
Dichlorodifluoromethane	ND		0.0010
Chloromethane	ND		0.0050
Vinyl Chloride	ND		0.0050
Bromomethane	ND		0.0050
Chloroethane	ND		0.0050
Trichlorofluoromethane	ND		0.0010
1,1-Dichloroethene	ND		0.0010
Iodomethane	ND		0.0050
Methylene Chloride	ND		0.0050
(trans) 1,2-Dichloroethene	ND		0.0010
1,1-Dichloroethane	ND		0.0010
2,2-Dichloropropane	ND		0.0010
(cis) 1,2-Dichloroethene	ND		0.0010
Bromochloromethane	ND		0.0010
Chloroform	ND		0.0010
1,1,1-Trichloroethane	ND		0.0010
Carbon Tetrachloride	ND		0.0010
1,1-Dichloropropene	ND		0.0010
1,2-Dichloroethane	ND		0.0010
Trichloroethene	ND		0.0010
1,2-Dichloropropane	ND		0.0010
Dibromomethane	ND		0.0010
Bromodichloromethane	ND		0.0010
2-Chloroethyl Vinyl Ether	ND		0.0050
(cis) 1,3-Dichloropropene	ND		0.0010
(trans) 1,3-Dichloropropene	ND		0.0010

This report pertains to the samples analyzed in accordance with the chain of custody,
and is intended only for the use of the individual or company to whom it is addressed.

Date of Report: December 12, 2006
Samples Submitted: December 9, 2006
Laboratory Reference: 0612-090
Project: 663-010

HALOGENATED VOLATILES by EPA 8260B
METHOD BLANK QUALITY CONTROL
page 2 of 2

Lab ID: MB1211S1

Compound	Results	Flags	PQL
1,1,2-Trichloroethane	ND		0.0010
Tetrachloroethene	ND		0.0010
1,3-Dichloropropane	ND		0.0010
Dibromochloromethane	ND		0.0010
1,2-Dibromoethane	ND		0.0010
Chlorobenzene	ND		0.0010
1,1,1,2-Tetrachloroethane	ND		0.0010
Bromoform	ND		0.0010
Bromobenzene	ND		0.0010
1,1,2,2-Tetrachloroethane	ND		0.0010
1,2,3-Trichloropropane	ND		0.0010
2-Chlorotoluene	ND		0.0010
4-Chlorotoluene	ND		0.0010
1,3-Dichlorobenzene	ND		0.0010
1,4-Dichlorobenzene	ND		0.0010
1,2-Dichlorobenzene	ND		0.0010
1,2-Dibromo-3-chloropropane	ND		0.0050
1,2,4-Trichlorobenzene	ND		0.0010
Hexachlorobutadiene	ND		0.0050
1,2,3-Trichlorobenzene	ND		0.0010

Surrogate	Percent Recovery	Control Limits
Dibromofluoromethane	92	71-126
Toluene, d8	96	73-130
4-Bromofluorobenzene	116	70-130

This report pertains to the samples analyzed in accordance with the chain of custody,
and is intended only for the use of the individual or company to whom it is addressed.

Date of Report: December 12, 2006
Samples Submitted: December 9, 2006
Laboratory Reference: 0612-090
Project: 663-010

HALOGENATED VOLATILES by EPA 8260B
SB/SBD QUALITY CONTROL

Date Extracted: 12-11-06
Date Analyzed: 12-11-06

Matrix: Soil
Units: mg/kg (ppm)

Lab ID: SB1211S1

Compound	Spike Amount	SB	Percent Recovery	SBD	Percent Recovery	Recovery Limits	Flags
1,1-Dichloroethene	0.0500	0.0619	124	0.0572	114	70-130	
Benzene	0.0500	0.0517	103	0.0496	99	70-130	
Trichloroethene	0.0500	0.0473	95	0.0465	93	70-130	
Toluene	0.0500	0.0524	105	0.0531	106	70-130	
Chlorobenzene	0.0500	0.0434	87	0.0441	88	70-130	

	RPD	RPD Limit	Flags
1,1-Dichloroethene	8	11	
Benzene	4	11	
Trichloroethene	2	13	
Toluene	1	11	
Chlorobenzene	2	12	

This report pertains to the samples analyzed in accordance with the chain of custody,
and is intended only for the use of the individual or company to whom it is addressed.

Date of Report: December 12, 2006
Samples Submitted: December 9, 2006
Laboratory Reference: 0612-090
Project: 663-010

% MOISTURE

Date Analyzed: 12-11-06

Client ID	Lab ID	% Moisture
BOX-8527-1	12-090-01	24
BOX-8527-2	12-090-02	15
BOX-7180-1	12-090-03	17
BOX-7180-2	12-090-04	15

This report pertains to the samples analyzed in accordance with the chain of custody,
and is intended only for the use of the individual or company to whom it is addressed.

OnSite Environmental Inc.

Data Qualifiers and Abbreviations

A - Due to a high sample concentration, the amount spiked is insufficient for meaningful MS/MSD recovery data.

B - The analyte indicated was also found in the blank sample.

C - The duplicate RPD is outside control limits due to high result variability when analyte concentrations are within five times the quantitation limit.

E - The value reported exceeds the quantitation range and is an estimate.

F - Surrogate recovery data is not available due to the high concentration of coeluting target compounds.

G - Insufficient sample quantity for duplicate analysis.

H - The analyte indicated is a common laboratory solvent and may have been introduced during sample preparation, and be impacting the sample result.

I - Compound recovery is outside of the control limits.

J - The value reported was below the practical quantitation limit. The value is an estimate.

K - Sample duplicate RPD is outside control limits due to sample inhomogeneity. The sample was re-extracted and re-analyzed with similar results.

L - The RPD is outside of the control limits.

M - Hydrocarbons in the gasoline range (toluene-napthalene) are present in the sample.

O - Hydrocarbons indicative of diesel fuel are present in the sample and are impacting the gasoline result.

P - The RPD of the detected concentrations between the two columns is greater than 40.

Q - Surrogate recovery is outside of the control limits.

S - Surrogate recovery data is not available due to the necessary dilution of the sample.

T - The sample chromatogram is not similar to a typical _____.

U - The analyte was analyzed for, but was not detected above the reported sample quantitation limit.

V - Matrix Spike/Matrix Spike Duplicate recoveries are outside control limits due to matrix effects.

W - Matrix Spike/Matrix Spike Duplicate RPD are outside control limits due to matrix effects.

X - Sample extract treated with a silica gel cleanup procedure.

Y - Sample extract treated with an acid/silica gel cleanup procedure.

Z -

ND - Not Detected at PQL
PQL - Practical Quantitation Limit
RPD - Relative Percent Difference

This report pertains to the samples analyzed in accordance with the chain of custody, and is intended only for the use of the individual or company to whom it is addressed.

Chain of Custody

Page 1 of 1

OnSite Environmental Inc.
14648 NE 95th Street • Redmond, WA 98052
Phone: (425) 883-3881 • Fax: (425) 885-4603

Company: Farallon Consulting
Project Number: 663-010
Project Name: Allison's Norge Village
Project Manager: C. Brock
Sampled by: F. Kelder

Turnaround Request (in working days)

(Check One)

- [X] Same Day
- [ ] 1 Day
- [ ] 2 Day
- [ ] 3 Day
- [ ] Standard (7 working days)
- [ ] _____ (other)

Laboratory Number: 12-090

Requested Analysis

Lab ID	Sample Identification	Date Sampled	Time Sampled	Matrix	# of Cont.	NWTPH-HCID	NWTPH-Gx/BTEX	NWTPH-Dx	Volatiles by 8260B	Halogenated Volatiles by 8260B	Semivolatiles by 8270C	PAHs by 8270C / SIM	PCBs by 8082	Pesticides by 8081A	Herbicides by 8151A	Total RCRA Metals (8)	TCLP Metals	HEM by 1664	VPH	EPH	% Moisture
1	Box-8527-1	12/8/06	1130	S	4					X											X
2	Box-8527-2	12/8/06	1135	S	4					X											X
3	Box-7180-1	12/8/06	1445	S	4					X											X
4	Box-7180-2	12/8/06	1450	S	4					X											X

SIR

	Signature	Company	Date	Time
Relinquished by		Farallon	12/9/06	1135
Received by		OnSite Env.	12/9/06	1135
Relinquished by				
Received by				
Relinquished by				
Received by				
Reviewed by/Date		Reviewed by/Date		

Comments/Special Instructions:

Chromatograms with final report ☐

DISTRIBUTION LEGEND: White - OnSite Copy Yellow - Report Copy Pink - Client Copy

OnSite Environmental Inc.
14648 NE 95th Street, Redmond, WA 98052 • (425) 883-3881

December 8, 2006

Carla Brock
Farallon Consulting, LLC
975 5th Avenue NW
Issaquah, WA 98027

Re: Analytical Data for Project 663-010
Laboratory Reference No. 0612-064

Dear Carla:

Enclosed are the analytical results and associated quality control data for samples submitted on December 7, 2006.

The standard policy of OnSite Environmental Inc. is to store your samples for 30 days from the date of receipt. If you require longer storage, please contact the laboratory.

We appreciate the opportunity to be of service to you on this project. If you have any questions concerning the data, or need additional information, please feel free to call me.

Sincerely,

David Baumeister
Project Manager

Enclosures

This report pertains to the samples analyzed in accordance with the chain of custody, and is intended only for the use of the individual or company to whom it is addressed.

Date of Report: December 8, 2006
Samples Submitted: December 7, 2006
Laboratory Reference: 0612-064
Project: 663-010

Case Narrative

Samples were collected on December 7, 2006 and received by the laboratory on December 7, 2006. They were maintained at the laboratory at a temperature of 2°C to 6°C except as noted below.

General QA/QC issues associated with the analytical data enclosed in this laboratory report will be indicated with a reference to a comment or explanation on the Data Qualifier page. More complex and involved QA/QC issues will be discussed in detail below.

Halogenated Volatiles EPA 8260B Analysis

Per EPA Method 5035A, samples were received by the laboratory in pre-weighed 40 mL VOA vials within 48 hours of sample collection. They were stored in a freezer at between -7°C and -20°C until extraction or analysis.

Internal Standard 1,4-Dichlorobenzene-d4 does not meet acceptance criteria for sample BOX-7065-2 due to sample matrix effects. A dilution of the sample resulted in acceptable internal standard recoveries. All results, including Practical Quantitation Limits, from Bromobenzene onward should be considered estimates.

Any other QA/QC issues associated with this extraction and analysis will be indicated with a footnote reference and discussed in detail on the Data Qualifier page.

This report pertains to the samples analyzed in accordance with the chain of custody, and is intended only for the use of the individual or company to whom it is addressed.

Date of Report: December 8, 2006
Samples Submitted: December 7, 2006
Laboratory Reference: 0612-064
Project: 663-010

HALOGENATED VOLATILES by EPA 8260B
page 1 of 2

Date Extracted: 12-7-06
Date Analyzed: 12-7-06

Matrix: Soil
Units: mg/kg (ppm)

Lab ID: 12-064-01
Client ID: BOX-7065-1

Compound	Results	Flags	PQL
Dichlorodifluoromethane	ND		0.0013
Chloromethane	ND		0.0065
Vinyl Chloride	ND		0.0065
Bromomethane	ND		0.0065
Chloroethane	ND		0.0065
Trichlorofluoromethane	ND		0.0013
1,1-Dichloroethene	ND		0.0013
Iodomethane	ND		0.0065
Methylene Chloride	ND		0.0065
(trans) 1,2-Dichloroethene	ND		0.0013
1,1-Dichloroethane	ND		0.0013
2,2-Dichloropropane	ND		0.0013
(cis) 1,2-Dichloroethene	ND		0.0013
Bromochloromethane	ND		0.0013
Chloroform	ND		0.0013
1,1,1-Trichloroethane	ND		0.0013
Carbon Tetrachloride	ND		0.0013
1,1-Dichloropropene	ND		0.0013
1,2-Dichloroethane	ND		0.0013
Trichloroethene	ND		0.0013
1,2-Dichloropropane	ND		0.0013
Dibromomethane	ND		0.0013
Bromodichloromethane	ND		0.0013
2-Chloroethyl Vinyl Ether	ND		0.0065
(cis) 1,3-Dichloropropene	ND		0.0013
(trans) 1,3-Dichloropropene	ND		0.0013

This report pertains to the samples analyzed in accordance with the chain of custody,
and is intended only for the use of the individual or company to whom it is addressed.

Date of Report: December 8, 2006
Samples Submitted: December 7, 2006
Laboratory Reference: 0612-064
Project: 663-010

HALOGENATED VOLATILES by EPA 8260B
page 2 of 2

Lab ID: 12-064-01
Client ID: BOX-7065-1

Compound	Results	Flags	PQL
1,1,2-Trichloroethane	ND		0.0013
Tetrachloroethene	0.82		0.066
1,3-Dichloropropane	ND		0.0013
Dibromochloromethane	ND		0.0013
1,2-Dibromoethane	ND		0.0013
Chlorobenzene	ND		0.0013
1,1,1,2-Tetrachloroethane	ND		0.0013
Bromoform	ND		0.0013
Bromobenzene	ND		0.0013
1,1,2,2-Tetrachloroethane	ND		0.0013
1,2,3-Trichloropropane	ND		0.0013
2-Chlorotoluene	ND		0.0013
4-Chlorotoluene	ND		0.0013
1,3-Dichlorobenzene	ND		0.0013
1,4-Dichlorobenzene	ND		0.0013
1,2-Dichlorobenzene	ND		0.0013
1,2-Dibromo-3-chloropropane	ND		0.0065
1,2,4-Trichlorobenzene	ND		0.0013
Hexachlorobutadiene	ND		0.0065
1,2,3-Trichlorobenzene	ND		0.0013

Surrogate	Percent Recovery	Control Limits
Dibromofluoromethane	96	71-126
Toluene, d8	87	73-130
4-Bromofluorobenzene	102	70-130

This report pertains to the samples analyzed in accordance with the chain of custody,
and is intended only for the use of the individual or company to whom it is addressed.

Date of Report: December 8, 2006
Samples Submitted: December 7, 2006
Laboratory Reference: 0612-064
Project: 663-010

HALOGENATED VOLATILES by EPA 8260B

Date Extracted: 12-7-06
Date Analyzed: 12-7-06

Matrix: Soil
Units: mg/kg (ppm)

Lab ID: 12-064-02
Client ID: BOX-7065-2

Compound	Results	Flags	PQL
Dichlorodifluoromethane	ND		0.0012
Chloromethane	ND		0.0059
Vinyl Chloride	ND		0.0059
Bromomethane	ND		0.0059
Chloroethane	ND		0.0059
Trichlorofluoromethane	ND		0.0012
1,1-Dichloroethene	ND		0.0012
Iodomethane	ND		0.0059
Methylene Chloride	ND		0.0059
(trans) 1,2-Dichloroethene	ND		0.0012
1,1-Dichloroethane	ND		0.0012
2,2-Dichloropropane	ND		0.0012
(cis) 1,2-Dichloroethene	ND		0.0012
Bromochloromethane	ND		0.0012
Chloroform	ND		0.0012
1,1,1-Trichloroethane	ND		0.0012
Carbon Tetrachloride	ND		0.0012
1,1-Dichloropropene	ND		0.0012
1,2-Dichloroethane	ND		0.0012
Trichloroethene	ND		0.0012
1,2-Dichloropropane	ND		0.0012
Dibromomethane	ND		0.0012
Bromodichloromethane	ND		0.0012
2-Chloroethyl Vinyl Ether	ND		0.0059
(cis) 1,3-Dichloropropene	ND		0.0012
(trans) 1,3-Dichloropropene	ND		0.0012

This report pertains to the samples analyzed in accordance with the chain of custody,
and is intended only for the use of the individual or company to whom it is addressed.

Date of Report: December 8, 2006
Samples Submitted: December 7, 2006
Laboratory Reference: 0612-064
Project: 663-010

HALOGENATED VOLATILES by EPA 8260B
page 2 of 2

Lab ID: 12-064-02
Client ID: BOX-7065-2

Compound	Results	Flags	PQL
1,1,2-Trichloroethane	ND		0.0012
Tetrachloroethene	0.41		0.061
1,3-Dichloropropane	ND		0.0012
Dibromochloromethane	ND		0.0012
1,2-Dibromoethane	ND		0.0012
Chlorobenzene	ND		0.0012
1,1,1,2-Tetrachloroethane	ND		0.0012
Bromoform	ND		0.0012
Bromobenzene	ND		0.0012
1,1,2,2-Tetrachloroethane	ND		0.0012
1,2,3-Trichloropropane	ND		0.0012
2-Chlorotoluene	ND		0.0012
4-Chlorotoluene	ND		0.0012
1,3-Dichlorobenzene	ND		0.0012
1,4-Dichlorobenzene	ND		0.0012
1,2-Dichlorobenzene	ND		0.0012
1,2-Dibromo-3-chloropropane	ND		0.0059
1,2,4-Trichlorobenzene	ND		0.0012
Hexachlorobutadiene	ND		0.0059
1,2,3-Trichlorobenzene	ND		0.0012

Surrogate	Percent Recovery	Control Limits
Dibromofluoromethane	90	71-126
Toluene, d8	90	73-130
4-Bromofluorobenzene	108	70-130

This report pertains to the samples analyzed in accordance with the chain of custody,
and is intended only for the use of the individual or company to whom it is addressed.

Date of Report: December 8, 2006
Samples Submitted: December 7, 2006
Laboratory Reference: 0612-064
Project: 663-010

HALOGENATED VOLATILES by EPA 8260B
METHOD BLANK QUALITY CONTROL
page 1 of 2

Date Extracted: 12-7-06
Date Analyzed: 12-7-06

Matrix: Soil
Units: mg/kg (ppm)

Lab ID: MB1207S1

Compound	Results	Flags	PQL
Dichlorodifluoromethane	ND		0.0010
Chloromethane	ND		0.0050
Vinyl Chloride	ND		0.0050
Bromomethane	ND		0.0050
Chloroethane	ND		0.0050
Trichlorofluoromethane	ND		0.0010
1,1-Dichloroethene	ND		0.0010
Iodomethane	ND		0.0050
Methylene Chloride	ND		0.0050
(trans) 1,2-Dichloroethene	ND		0.0010
1,1-Dichloroethane	ND		0.0010
2,2-Dichloropropane	ND		0.0010
(cis) 1,2-Dichloroethene	ND		0.0010
Bromochloromethane	ND		0.0010
Chloroform	ND		0.0010
1,1,1-Trichloroethane	ND		0.0010
Carbon Tetrachloride	ND		0.0010
1,1-Dichloropropene	ND		0.0010
1,2-Dichloroethane	ND		0.0010
Trichloroethene	ND		0.0010
1,2-Dichloropropane	ND		0.0010
Dibromomethane	ND		0.0010
Bromodichloromethane	ND		0.0010
2-Chloroethyl Vinyl Ether	ND		0.0050
(cis) 1,3-Dichloropropene	ND		0.0010
(trans) 1,3-Dichloropropene	ND		0.0010

This report pertains to the samples analyzed in accordance with the chain of custody,
and is intended only for the use of the individual or company to whom it is addressed.

Date of Report: December 8, 2006
Samples Submitted: December 7, 2006
Laboratory Reference: 0612-064
Project: 663-010

HALOGENATED VOLATILES by EPA 8260B
METHOD BLANK QUALITY CONTROL
page 2 of 2

Lab ID: MB1207S1

Compound	Results	Flags	PQL
1,1,2-Trichloroethane	ND		0.0010
Tetrachloroethene	ND		0.0010
1,3-Dichloropropane	ND		0.0010
Dibromochloromethane	ND		0.0010
1,2-Dibromoethane	ND		0.0010
Chlorobenzene	ND		0.0010
1,1,1,2-Tetrachloroethane	ND		0.0010
Bromoform	ND		0.0010
Bromobenzene	ND		0.0010
1,1,2,2-Tetrachloroethane	ND		0.0010
1,2,3-Trichloropropane	ND		0.0010
2-Chlorotoluene	ND		0.0010
4-Chlorotoluene	ND		0.0010
1,3-Dichlorobenzene	ND		0.0010
1,4-Dichlorobenzene	ND		0.0010
1,2-Dichlorobenzene	ND		0.0010
1,2-Dibromo-3-chloropropane	ND		0.0050
1,2,4-Trichlorobenzene	ND		0.0010
Hexachlorobutadiene	ND		0.0050
1,2,3-Trichlorobenzene	ND		0.0010

Surrogate	Percent Recovery	Control Limits
Dibromofluoromethane	90	71-126
Toluene, d8	93	73-130
4-Bromofluorobenzene	106	70-130

This report pertains to the samples analyzed in accordance with the chain of custody,
and is intended only for the use of the individual or company to whom it is addressed.

Date of Report: December 8, 2006
Samples Submitted: December 7, 2006
Laboratory Reference: 0612-064
Project: 663-010

HALOGENATED VOLATILES by EPA 8260B
SB/SBD QUALITY CONTROL

Date Extracted: 12-7-06
Date Analyzed: 12-7-06

Matrix: Soil
Units: mg/kg (ppm)

Lab ID: SB1207S1

Compound	Spike Amount	SB	Percent Recovery	SBD	Percent Recovery	Recovery Limits	Flags
1,1-Dichloroethene	0.0500	0.0563	113	0.0610	122	70-130	
Benzene	0.0500	0.0462	92	0.0456	91	70-130	
Trichloroethene	0.0500	0.0428	86	0.0452	90	70-130	
Toluene	0.0500	0.0493	99	0.0503	101	70-130	
Chlorobenzene	0.0500	0.0455	91	0.0440	88	70-130	

	RPD	RPD Limit	Flags
1,1-Dichloroethene	8	11	
Benzene	2	11	
Trichloroethene	5	13	
Toluene	2	11	
Chlorobenzene	3	12	

This report pertains to the samples analyzed in accordance with the chain of custody,
and is intended only for the use of the individual or company to whom it is addressed.

Date of Report: December 8, 2006
Samples Submitted: December 7, 2006
Laboratory Reference: 0612-064
Project: 663-010

% MOISTURE

Date Analyzed: 12-7-06

Client ID	Lab ID	% Moisture
BOX-7065-1	12-064-01	13
BOX-7065-2	12-064-02	13

This report pertains to the samples analyzed in accordance with the chain of custody,
and is intended only for the use of the individual or company to whom it is addressed.

OnSite Environmental Inc.

Data Qualifiers and Abbreviations

A - Due to a high sample concentration, the amount spiked is insufficient for meaningful MS/MSD recovery data.

B - The analyte indicated was also found in the blank sample.

C - The duplicate RPD is outside control limits due to high result variability when analyte concentrations are within five times the quantitation limit.

E - The value reported exceeds the quantitation range and is an estimate.

F - Surrogate recovery data is not available due to the high concentration of coeluting target compounds.

G - Insufficient sample quantity for duplicate analysis.

H - The analyte indicated is a common laboratory solvent and may have been introduced during sample preparation, and be impacting the sample result.

I - Compound recovery is outside of the control limits.

J - The value reported was below the practical quantitation limit. The value is an estimate.

K - Sample duplicate RPD is outside control limits due to sample inhomogeneity. The sample was re-extracted and re-analyzed with similar results.

L - The RPD is outside of the control limits.

M - Hydrocarbons in the gasoline range (toluene-napthalene) are present in the sample.

O - Hydrocarbons indicative of diesel fuel are present in the sample and are impacting the gasoline result.

P - The RPD of the detected concentrations between the two columns is greater than 40.

Q - Surrogate recovery is outside of the control limits.

S - Surrogate recovery data is not available due to the necessary dilution of the sample.

T - The sample chromatogram is not similar to a typical _____.

U - The analyte was analyzed for, but was not detected above the reported sample quantitation limit.

V - Matrix Spike/Matrix Spike Duplicate recoveries are outside control limits due to matrix effects.

W - Matrix Spike/Matrix Spike Duplicate RPD are outside control limits due to matrix effects.

X - Sample extract treated with a silica gel cleanup procedure.

Y - Sample extract treated with an acid/silica gel cleanup procedure.

Z -

ND - Not Detected at PQL
PQL - Practical Quantitation Limit
RPD - Relative Percent Difference

This report pertains to the samples analyzed in accordance with the chain of custody, and is intended only for the use of the individual or company to whom it is addressed.

Chain of Custody

OnSite Environmental Inc.
14648 NE 95th Street • Redmond, WA 98052
Phone: (425) 883-3881 • Fax: (425) 885-4603

Company: Farallon Consulting
Project Number: 663-010
Project Name: Allison's Norge Village
Project Manager: C. Brock
Sampled by: F. Reider

Turnaround Request (in working days)

(Check One)

- [x] Same Day
- [ ] 1 Day
- [ ] 2 Day
- [ ] 3 Day
- [ ] Standard (7 working days)
- [ ] _____ (other)

Laboratory Number: 12-064

Requested Analysis

Lab ID	Sample Identification	Date Sampled	Time Sampled	Matrix	# of Cont.	NWTPH-HCID	NWTPH-Gx/BTEX	NWTPH-Dx	Volatiles by 8260B	Halogenated Volatiles by 8260B	Semivolatiles by 8270C	PAHs by 8270C / SIM	PCBs by 8082	Pesticides by 8081A	Herbicides by 8151A	Total RCRA Metals (8)	TCLP Metals	HEM by 1664	VPH	EPH				% Moisture
1	Box-7065-1	12/7/06	0815	S	4					X														X
2	Box-7065-2	12/7/06	0830	S	4					X														X

	Signature	Company	Date	Time
Relinquished by		Farallon	12/7/06	1250
Received by		OnSite Env.	12/7/06	1750
Relinquished by				
Received by				
Relinquished by				
Received by				

Comments/Special Instructions:
results.
Tomorrow afternoon

Reviewed by/Date

Reviewed by/Date

Chromatograms with final report ☐

DISTRIBUTION LEGEND: White - OnSite Copy Yellow - Report Copy Pink - Client Copy

OnSite Environmental Inc.
14648 NE 95th Street, Redmond, WA 98052 • (425) 883-3881

December 7, 2006

Carla Brock
Farallon Consulting, LLC
975 5th Avenue NW
Issaquah, WA 98027

Re: Analytical Data for Project 663-010
Laboratory Reference No. 0612-056

Dear Carla:

Enclosed are the analytical results and associated quality control data for samples submitted on December 6, 2006.

The standard policy of OnSite Environmental Inc. is to store your samples for 30 days from the date of receipt. If you require longer storage, please contact the laboratory.

We appreciate the opportunity to be of service to you on this project. If you have any questions concerning the data, or need additional information, please feel free to call me.

Sincerely,

David Baumeister
Project Manager

Enclosures

This report pertains to the samples analyzed in accordance with the chain of custody, and is intended only for the use of the individual or company to whom it is addressed.

Date of Report: December 7, 2006
Samples Submitted: December 6, 2006
Laboratory Reference: 0612-056
Project: 663-010

Case Narrative

Samples were collected on December 6, 2006 and received by the laboratory on December 6, 2006. They were maintained at the laboratory at a temperature of 2°C to 6°C except as noted below.

General QA/QC issues associated with the analytical data enclosed in this laboratory report will be indicated with a reference to a comment or explanation on the Data Qualifier page. More complex and involved QA/QC issues will be discussed in detail below.

Halogenated Volatiles EPA 8260B Analysis

Per EPA Method 5035A, samples were received by the laboratory in pre-weighed 40 mL VOA vials within 48 hours of sample collection. They were stored in a freezer at between -7°C and -20°C until extraction or analysis.

Any other QA/QC issues associated with this extraction and analysis will be indicated with a footnote reference and discussed in detail on the Data Qualifier page.

This report pertains to the samples analyzed in accordance with the chain of custody, and is intended only for the use of the individual or company to whom it is addressed.

Date of Report: December 7, 2006
Samples Submitted: December 6, 2006
Laboratory Reference: 0612-056
Project: 663-010

HALOGENATED VOLATILES by EPA 8260B

Date Extracted: 12-6&7-06
Date Analyzed: 12-7-06

Matrix: Soil
Units: mg/kg (ppm)

Lab ID: 12-056-01
Client ID: BOX-7116-1

Compound	Results	Flags	PQL
Dichlorodifluoromethane	ND		0.0013
Chloromethane	ND		0.0065
Vinyl Chloride	ND		0.0065
Bromomethane	ND		0.0065
Chloroethane	ND		0.0065
Trichlorofluoromethane	ND		0.0013
1,1-Dichloroethene	ND		0.0013
Iodomethane	ND		0.0065
Methylene Chloride	ND		0.0065
(trans) 1,2-Dichloroethene	ND		0.0013
1,1-Dichloroethane	ND		0.0013
2,2-Dichloropropane	ND		0.0013
(cis) 1,2-Dichloroethene	ND		0.0013
Bromochloromethane	ND		0.0013
Chloroform	ND		0.0013
1,1,1-Trichloroethane	ND		0.0013
Carbon Tetrachloride	ND		0.0013
1,1-Dichloropropene	ND		0.0013
1,2-Dichloroethane	ND		0.0013
Trichloroethene	ND		0.0013
1,2-Dichloropropane	ND		0.0013
Dibromomethane	ND		0.0013
Bromodichloromethane	ND		0.0013
2-Chloroethyl Vinyl Ether	ND		0.0065
(cis) 1,3-Dichloropropene	ND		0.0013
(trans) 1,3-Dichloropropene	ND		0.0013

This report pertains to the samples analyzed in accordance with the chain of custody,
and is intended only for the use of the individual or company to whom it is addressed.

Date of Report: December 7, 2006
Samples Submitted: December 6, 2006
Laboratory Reference: 0612-056
Project: 663-010

HALOGENATED VOLATILES by EPA 8260B
page 2 of 2

Lab ID: 12-056-01
Client ID: BOX-7116-1

Compound	Results	Flags	PQL
1,1,2-Trichloroethane	ND		0.0013
Tetrachloroethene	0.36		0.067
1,3-Dichloropropane	ND		0.0013
Dibromochloromethane	ND		0.0013
1,2-Dibromoethane	ND		0.0013
Chlorobenzene	ND		0.0013
1,1,1,2-Tetrachloroethane	ND		0.0013
Bromoform	ND		0.0013
Bromobenzene	ND		0.0013
1,1,2,2-Tetrachloroethane	ND		0.0013
1,2,3-Trichloropropane	ND		0.0013
2-Chlorotoluene	ND		0.0013
4-Chlorotoluene	ND		0.0013
1,3-Dichlorobenzene	ND		0.0013
1,4-Dichlorobenzene	ND		0.0013
1,2-Dichlorobenzene	ND		0.0013
1,2-Dibromo-3-chloropropane	ND		0.0065
1,2,4-Trichlorobenzene	ND		0.0013
Hexachlorobutadiene	ND		0.0065
1,2,3-Trichlorobenzene	ND		0.0013

Surrogate	Percent Recovery	Control Limits
Dibromofluoromethane	105	71-126
Toluene, d8	100	73-130
4-Bromofluorobenzene	113	70-130

This report pertains to the samples analyzed in accordance with the chain of custody,
and is intended only for the use of the individual or company to whom it is addressed.

Date of Report: December 7, 2006
Samples Submitted: December 6, 2006
Laboratory Reference: 0612-056
Project: 663-010

HALOGENATED VOLATILES by EPA 8260B

Date Extracted: 12-6-06
Date Analyzed: 12-7-06

Matrix: Soil
Units: mg/kg (ppm)

Lab ID: 12-056-02
Client ID: BOX-7116-2

Compound	Results	Flags	PQL
Dichlorodifluoromethane	ND		0.0012
Chloromethane	ND		0.0061
Vinyl Chloride	ND		0.0061
Bromomethane	ND		0.0061
Chloroethane	ND		0.0061
Trichlorofluoromethane	ND		0.0012
1,1-Dichloroethene	ND		0.0012
Iodomethane	ND		0.0061
Methylene Chloride	ND		0.0061
(trans) 1,2-Dichloroethene	ND		0.0012
1,1-Dichloroethane	ND		0.0012
2,2-Dichloropropane	ND		0.0012
(cis) 1,2-Dichloroethene	ND		0.0012
Bromochloromethane	ND		0.0012
Chloroform	ND		0.0012
1,1,1-Trichloroethane	ND		0.0012
Carbon Tetrachloride	ND		0.0012
1,1-Dichloropropene	ND		0.0012
1,2-Dichloroethane	ND		0.0012
Trichloroethene	ND		0.0012
1,2-Dichloropropane	ND		0.0012
Dibromomethane	ND		0.0012
Bromodichloromethane	ND		0.0012
2-Chloroethyl Vinyl Ether	ND		0.0061
(cis) 1,3-Dichloropropene	ND		0.0012
(trans) 1,3-Dichloropropene	ND		0.0012

This report pertains to the samples analyzed in accordance with the chain of custody,
and is intended only for the use of the individual or company to whom it is addressed.

Date of Report: December 7, 2006
Samples Submitted: December 6, 2006
Laboratory Reference: 0612-056
Project: 663-010

HALOGENATED VOLATILES by EPA 8260B
page 2 of 2

Lab ID: 12-056-02
Client ID: BOX-7116-2

Compound	Results	Flags	PQL
1,1,2-Trichloroethane	ND		0.0012
Tetrachloroethene	0.18		0.0012
1,3-Dichloropropane	ND		0.0012
Dibromochloromethane	ND		0.0012
1,2-Dibromoethane	ND		0.0012
Chlorobenzene	ND		0.0012
1,1,1,2-Tetrachloroethane	ND		0.0012
Bromoform	ND		0.0012
Bromobenzene	ND		0.0012
1,1,2,2-Tetrachloroethane	ND		0.0012
1,2,3-Trichloropropane	ND		0.0012
2-Chlorotoluene	ND		0.0012
4-Chlorotoluene	ND		0.0012
1,3-Dichlorobenzene	ND		0.0012
1,4-Dichlorobenzene	ND		0.0012
1,2-Dichlorobenzene	ND		0.0012
1,2-Dibromo-3-chloropropane	ND		0.0061
1,2,4-Trichlorobenzene	ND		0.0012
Hexachlorobutadiene	ND		0.0061
1,2,3-Trichlorobenzene	ND		0.0012

Surrogate	Percent Recovery	Control Limits
Dibromofluoromethane	98	71-126
Toluene, d8	95	73-130
4-Bromofluorobenzene	111	70-130

This report pertains to the samples analyzed in accordance with the chain of custody,
and is intended only for the use of the individual or company to whom it is addressed.

Date of Report: December 7, 2006
Samples Submitted: December 6, 2006
Laboratory Reference: 0612-056
Project: 663-010

HALOGENATED VOLATILES by EPA 8260B

Date Extracted: 12-6&7-06
Date Analyzed: 12-7-06

Matrix: Soil
Units: mg/kg (ppm)

Lab ID: 12-056-03
Client ID: BOX-7079-1

Compound	Results	Flags	PQL
Dichlorodifluoromethane	ND		0.0015
Chloromethane	ND		0.0073
Vinyl Chloride	ND		0.0073
Bromomethane	ND		0.0073
Chloroethane	ND		0.0073
Trichlorofluoromethane	ND		0.0015
1,1-Dichloroethene	ND		0.0015
Iodomethane	ND		0.0073
Methylene Chloride	ND		0.0073
(trans) 1,2-Dichloroethene	ND		0.0015
1,1-Dichloroethane	ND		0.0015
2,2-Dichloropropane	ND		0.0015
(cis) 1,2-Dichloroethene	ND		0.0015
Bromochloromethane	ND		0.0015
Chloroform	ND		0.0015
1,1,1-Trichloroethane	ND		0.0015
Carbon Tetrachloride	ND		0.0015
1,1-Dichloropropene	ND		0.0015
1,2-Dichloroethane	ND		0.0015
Trichloroethene	ND		0.0015
1,2-Dichloropropane	ND		0.0015
Dibromomethane	ND		0.0015
Bromodichloromethane	ND		0.0015
2-Chloroethyl Vinyl Ether	ND		0.0073
(cis) 1,3-Dichloropropene	ND		0.0015
(trans) 1,3-Dichloropropene	ND		0.0015

This report pertains to the samples analyzed in accordance with the chain of custody,
and is intended only for the use of the individual or company to whom it is addressed.

Date of Report: December 7, 2006
Samples Submitted: December 6, 2006
Laboratory Reference: 0612-056
Project: 663-010

HALOGENATED VOLATILES by EPA 8260B
page 2 of 2

Lab ID: 12-056-03
Client ID: BOX-7079-1

Compound	Results	Flags	PQL
1,1,2-Trichloroethane	ND		0.0015
Tetrachloroethene	0.37		0.061
1,3-Dichloropropane	ND		0.0015
Dibromochloromethane	ND		0.0015
1,2-Dibromoethane	ND		0.0015
Chlorobenzene	ND		0.0015
1,1,1,2-Tetrachloroethane	ND		0.0015
Bromoform	ND		0.0015
Bromobenzene	ND		0.0015
1,1,2,2-Tetrachloroethane	ND		0.0015
1,2,3-Trichloropropane	ND		0.0015
2-Chlorotoluene	ND		0.0015
4-Chlorotoluene	ND		0.0015
1,3-Dichlorobenzene	ND		0.0015
1,4-Dichlorobenzene	ND		0.0015
1,2-Dichlorobenzene	ND		0.0015
1,2-Dibromo-3-chloropropane	ND		0.0073
1,2,4-Trichlorobenzene	ND		0.0015
Hexachlorobutadiene	ND		0.0073
1,2,3-Trichlorobenzene	ND		0.0015

Surrogate	Percent Recovery	Control Limits
Dibromofluoromethane	94	71-126
Toluene, d8	95	73-130
4-Bromofluorobenzene	99	70-130

This report pertains to the samples analyzed in accordance with the chain of custody,
and is intended only for the use of the individual or company to whom it is addressed.

Date of Report: December 7, 2006
Samples Submitted: December 6, 2006
Laboratory Reference: 0612-056
Project: 663-010

HALOGENATED VOLATILES by EPA 8260B
page 1 of 2

Date Extracted: 12-6&7-06
Date Analyzed: 12-7-06

Matrix: Soil
Units: mg/kg (ppm)

Lab ID: 12-056-04
Client ID: BOX-7079-2

Compound	Results	Flags	PQL
Dichlorodifluoromethane	ND		0.0012
Chloromethane	ND		0.0060
Vinyl Chloride	ND		0.0060
Bromomethane	ND		0.0060
Chloroethane	ND		0.0060
Trichlorofluoromethane	ND		0.0012
1,1-Dichloroethene	ND		0.0012
Iodomethane	ND		0.0060
Methylene Chloride	ND		0.0060
(trans) 1,2-Dichloroethene	ND		0.0012
1,1-Dichloroethane	ND		0.0012
2,2-Dichloropropane	ND		0.0012
(cis) 1,2-Dichloroethene	ND		0.0012
Bromochloromethane	ND		0.0012
Chloroform	ND		0.0012
1,1,1-Trichloroethane	ND		0.0012
Carbon Tetrachloride	ND		0.0012
1,1-Dichloropropene	ND		0.0012
1,2-Dichloroethane	ND		0.0012
Trichloroethene	ND		0.0012
1,2-Dichloropropane	ND		0.0012
Dibromomethane	ND		0.0012
Bromodichloromethane	ND		0.0012
2-Chloroethyl Vinyl Ether	ND		0.0060
(cis) 1,3-Dichloropropene	ND		0.0012
(trans) 1,3-Dichloropropene	ND		0.0012

This report pertains to the samples analyzed in accordance with the chain of custody,
and is intended only for the use of the individual or company to whom it is addressed.

Date of Report: December 7, 2006
Samples Submitted: December 6, 2006
Laboratory Reference: 0612-056
Project: 663-010

HALOGENATED VOLATILES by EPA 8260B
page 2 of 2

Lab ID: 12-056-04
Client ID: BOX-7079-2

Compound	Results	Flags	PQL
1,1,2-Trichloroethane	ND		0.0012
Tetrachloroethene	0.62		0.057
1,3-Dichloropropane	ND		0.0012
Dibromochloromethane	ND		0.0012
1,2-Dibromoethane	ND		0.0012
Chlorobenzene	ND		0.0012
1,1,1,2-Tetrachloroethane	ND		0.0012
Bromoform	ND		0.0012
Bromobenzene	ND		0.0012
1,1,2,2-Tetrachloroethane	ND		0.0012
1,2,3-Trichloropropane	ND		0.0012
2-Chlorotoluene	ND		0.0012
4-Chlorotoluene	ND		0.0012
1,3-Dichlorobenzene	ND		0.0012
1,4-Dichlorobenzene	ND		0.0012
1,2-Dichlorobenzene	ND		0.0012
1,2-Dibromo-3-chloropropane	ND		0.0060
1,2,4-Trichlorobenzene	ND		0.0012
Hexachlorobutadiene	ND		0.0060
1,2,3-Trichlorobenzene	ND		0.0012

Surrogate	Percent Recovery	Control Limits
Dibromofluoromethane	101	71-126
Toluene, d8	92	73-130
4-Bromofluorobenzene	107	70-130

This report pertains to the samples analyzed in accordance with the chain of custody,
and is intended only for the use of the individual or company to whom it is addressed.

Date of Report: December 7, 2006
Samples Submitted: December 6, 2006
Laboratory Reference: 0612-056
Project: 663-010

HALOGENATED VOLATILES by EPA 8260B
METHOD BLANK QUALITY CONTROL
page 1 of 2

Date Extracted: 12-6-06
Date Analyzed: 12-6-06

Matrix: Soil
Units: mg/kg (ppm)

Lab ID: MB1206S1

Compound	Results	Flags	PQL
Dichlorodifluoromethane	ND		0.0010
Chloromethane	ND		0.0050
Vinyl Chloride	ND		0.0050
Bromomethane	ND		0.0050
Chloroethane	ND		0.0050
Trichlorofluoromethane	ND		0.0010
1,1-Dichloroethene	ND		0.0010
Iodomethane	ND		0.0050
Methylene Chloride	ND		0.0050
(trans) 1,2-Dichloroethene	ND		0.0010
1,1-Dichloroethane	ND		0.0010
2,2-Dichloropropane	ND		0.0010
(cis) 1,2-Dichloroethene	ND		0.0010
Bromochloromethane	ND		0.0010
Chloroform	ND		0.0010
1,1,1-Trichloroethane	ND		0.0010
Carbon Tetrachloride	ND		0.0010
1,1-Dichloropropene	ND		0.0010
1,2-Dichloroethane	ND		0.0010
Trichloroethene	ND		0.0010
1,2-Dichloropropane	ND		0.0010
Dibromomethane	ND		0.0010
Bromodichloromethane	ND		0.0010
2-Chloroethyl Vinyl Ether	ND		0.0050
(cis) 1,3-Dichloropropene	ND		0.0010
(trans) 1,3-Dichloropropene	ND		0.0010

This report pertains to the samples analyzed in accordance with the chain of custody,
and is intended only for the use of the individual or company to whom it is addressed.

Date of Report: December 7, 2006
Samples Submitted: December 6, 2006
Laboratory Reference: 0612-056
Project: 663-010

HALOGENATED VOLATILES by EPA 8260B
METHOD BLANK QUALITY CONTROL
page 2 of 2

Lab ID: MB1206S1

Compound	Results	Flags	PQL
1,1,2-Trichloroethane	ND		0.0010
Tetrachloroethene	ND		0.0010
1,3-Dichloropropane	ND		0.0010
Dibromochloromethane	ND		0.0010
1,2-Dibromoethane	ND		0.0010
Chlorobenzene	ND		0.0010
1,1,1,2-Tetrachloroethane	ND		0.0010
Bromoform	ND		0.0010
Bromobenzene	ND		0.0010
1,1,2,2-Tetrachloroethane	ND		0.0010
1,2,3-Trichloropropane	ND		0.0010
2-Chlorotoluene	ND		0.0010
4-Chlorotoluene	ND		0.0010
1,3-Dichlorobenzene	ND		0.0010
1,4-Dichlorobenzene	ND		0.0010
1,2-Dichlorobenzene	ND		0.0010
1,2-Dibromo-3-chloropropane	ND		0.0050
1,2,4-Trichlorobenzene	ND		0.0010
Hexachlorobutadiene	ND		0.0050
1,2,3-Trichlorobenzene	ND		0.0010

Surrogate	Percent Recovery	Control Limits
Dibromofluoromethane	97	71-126
Toluene, d8	100	73-130
4-Bromofluorobenzene	114	70-130

This report pertains to the samples analyzed in accordance with the chain of custody,
and is intended only for the use of the individual or company to whom it is addressed.

Date of Report: December 7, 2006
Samples Submitted: December 6, 2006
Laboratory Reference: 0612-056
Project: 663-010

HALOGENATED VOLATILES by EPA 8260B
METHOD BLANK QUALITY CONTROL
page 1 of 2

Date Extracted: 12-7-06
Date Analyzed: 12-7-06

Matrix: Soil
Units: mg/kg (ppm)

Lab ID: MB1207S1

Compound	Results	Flags	PQL
Dichlorodifluoromethane	ND		0.0010
Chloromethane	ND		0.0050
Vinyl Chloride	ND		0.0050
Bromomethane	ND		0.0050
Chloroethane	ND		0.0050
Trichlorofluoromethane	ND		0.0010
1,1-Dichloroethene	ND		0.0010
Iodomethane	ND		0.0050
Methylene Chloride	ND		0.0050
(trans) 1,2-Dichloroethene	ND		0.0010
1,1-Dichloroethane	ND		0.0010
2,2-Dichloropropane	ND		0.0010
(cis) 1,2-Dichloroethene	ND		0.0010
Bromochloromethane	ND		0.0010
Chloroform	ND		0.0010
1,1,1-Trichloroethane	ND		0.0010
Carbon Tetrachloride	ND		0.0010
1,1-Dichloropropene	ND		0.0010
1,2-Dichloroethane	ND		0.0010
Trichloroethene	ND		0.0010
1,2-Dichloropropane	ND		0.0010
Dibromomethane	ND		0.0010
Bromodichloromethane	ND		0.0010
2-Chloroethyl Vinyl Ether	ND		0.0050
(cis) 1,3-Dichloropropene	ND		0.0010
(trans) 1,3-Dichloropropene	ND		0.0010

This report pertains to the samples analyzed in accordance with the chain of custody,
and is intended only for the use of the individual or company to whom it is addressed.

Date of Report: December 7, 2006
Samples Submitted: December 6, 2006
Laboratory Reference: 0612-056
Project: 663-010

HALOGENATED VOLATILES by EPA 8260B
METHOD BLANK QUALITY CONTROL
page 2 of 2

Lab ID: MB1207S1

Compound	Results	Flags	PQL
1,1,2-Trichloroethane	ND		0.0010
Tetrachloroethene	ND		0.0010
1,3-Dichloropropane	ND		0.0010
Dibromochloromethane	ND		0.0010
1,2-Dibromoethane	ND		0.0010
Chlorobenzene	ND		0.0010
1,1,1,2-Tetrachloroethane	ND		0.0010
Bromoform	ND		0.0010
Bromobenzene	ND		0.0010
1,1,2,2-Tetrachloroethane	ND		0.0010
1,2,3-Trichloropropane	ND		0.0010
2-Chlorotoluene	ND		0.0010
4-Chlorotoluene	ND		0.0010
1,3-Dichlorobenzene	ND		0.0010
1,4-Dichlorobenzene	ND		0.0010
1,2-Dichlorobenzene	ND		0.0010
1,2-Dibromo-3-chloropropane	ND		0.0050
1,2,4-Trichlorobenzene	ND		0.0010
Hexachlorobutadiene	ND		0.0050
1,2,3-Trichlorobenzene	ND		0.0010

Surrogate	Percent Recovery	Control Limits
Dibromofluoromethane	90	71-126
Toluene, d8	93	73-130
4-Bromofluorobenzene	106	70-130

This report pertains to the samples analyzed in accordance with the chain of custody,
and is intended only for the use of the individual or company to whom it is addressed.

Date of Report: December 7, 2006
Samples Submitted: December 6, 2006
Laboratory Reference: 0612-056
Project: 663-010

HALOGENATED VOLATILES by EPA 8260B
SB/SBD QUALITY CONTROL

Date Extracted: 12-6-06
Date Analyzed: 12-6-06

Matrix: Soil
Units: mg/kg (ppm)

Lab ID: SB1206S1

Compound	Spike Amount	SB	Percent Recovery	SBD	Percent Recovery	Recovery Limits	Flags
1,1-Dichloroethene	0.0500	0.0568	114	0.0560	112	70-130	
Benzene	0.0500	0.0457	91	0.0441	88	70-130	
Trichloroethene	0.0500	0.0432	86	0.0435	87	70-130	
Toluene	0.0500	0.0462	92	0.0461	92	70-130	
Chlorobenzene	0.0500	0.0425	85	0.0440	88	70-130	

	RPD	RPD Limit	Flags
1,1-Dichloroethene	1	11	
Benzene	3	11	
Trichloroethene	1	13	
Toluene	0	11	
Chlorobenzene	4	12	

This report pertains to the samples analyzed in accordance with the chain of custody,
and is intended only for the use of the individual or company to whom it is addressed.

Date of Report: December 7, 2006
Samples Submitted: December 6, 2006
Laboratory Reference: 0612-056
Project: 663-010

HALOGENATED VOLATILES by EPA 8260B
SB/SBD QUALITY CONTROL

Date Extracted: 12-7-06
Date Analyzed: 12-7-06

Matrix: Soil
Units: mg/kg (ppm)

Lab ID: SB1207S1

Compound	Spike Amount	SB	Percent Recovery	SBD	Percent Recovery	Recovery Limits	Flags
1,1-Dichloroethene	0.0500	0.0563	113	0.0610	122	70-130	
Benzene	0.0500	0.0462	92	0.0456	91	70-130	
Trichloroethene	0.0500	0.0428	86	0.0452	90	70-130	
Toluene	0.0500	0.0493	99	0.0503	101	70-130	
Chlorobenzene	0.0500	0.0455	91	0.0440	88	70-130	

	RPD	RPD Limit	Flags
1,1-Dichloroethene	8	11	
Benzene	2	11	
Trichloroethene	5	13	
Toluene	2	11	
Chlorobenzene	3	12	

This report pertains to the samples analyzed in accordance with the chain of custody,
and is intended only for the use of the individual or company to whom it is addressed.

Date of Report: December 7, 2006
Samples Submitted: December 6, 2006
Laboratory Reference: 0612-056
Project: 663-010

% MOISTURE

Date Analyzed: 12-6-06

Client ID	Lab ID	% Moisture
Box-7116-1	12-056-01	12
Box-7116-2	12-056-02	14
Box-7079-1	12-056-03	18
Box-7079-2	12-056-04	17

This report pertains to the samples analyzed in accordance with the chain of custody,
and is intended only for the use of the individual or company to whom it is addressed.

OnSite Environmental Inc.

Data Qualifiers and Abbreviations

A - Due to a high sample concentration, the amount spiked is insufficient for meaningful MS/MSD recovery data.

B - The analyte indicated was also found in the blank sample.

C - The duplicate RPD is outside control limits due to high result variability when analyte concentrations are within five times the quantitation limit.

E - The value reported exceeds the quantitation range and is an estimate.

F - Surrogate recovery data is not available due to the high concentration of coeluting target compounds.

G - Insufficient sample quantity for duplicate analysis.

H - The analyte indicated is a common laboratory solvent and may have been introduced during sample preparation, and be impacting the sample result.

I - Compound recovery is outside of the control limits.

J - The value reported was below the practical quantitation limit. The value is an estimate.

K - Sample duplicate RPD is outside control limits due to sample inhomogeneity. The sample was re-extracted and re-analyzed with similar results.

L - The RPD is outside of the control limits.

M - Hydrocarbons in the gasoline range (toluene-napthalene) are present in the sample.

O - Hydrocarbons indicative of diesel fuel are present in the sample and are impacting the gasoline result.

P - The RPD of the detected concentrations between the two columns is greater than 40.

Q - Surrogate recovery is outside of the control limits.

S - Surrogate recovery data is not available due to the necessary dilution of the sample.

T - The sample chromatogram is not similar to a typical _____.

U - The analyte was analyzed for, but was not detected above the reported sample quantitation limit.

V - Matrix Spike/Matrix Spike Duplicate recoveries are outside control limits due to matrix effects.

W - Matrix Spike/Matrix Spike Duplicate RPD are outside control limits due to matrix effects.

X - Sample extract treated with a silica gel cleanup procedure.

Y - Sample extract treated with an acid/silica gel cleanup procedure.

Z -

ND - Not Detected at PQL
PQL - Practical Quantitation Limit
RPD - Relative Percent Difference

This report pertains to the samples analyzed in accordance with the chain of custody, and is intended only for the use of the individual or company to whom it is addressed.

Chain of Custody

OnSite Environmental Inc.
14648 NE 95th Street • Redmond, WA 98052
Phone: (425) 883-3881 • Fax: (425) 885-4603

Company: Farallon Consulting
Project Number: 663-010
Project Name: Allison's Norge Village
Project Manager: C. Brock
Sampled by: F. Reider

Turnaround Request (in working days)

(Check One)

- ☒ Same Day
- ☐ 1 Day
- ☐ 2 Day
- ☐ 3 Day
- ☐ Standard (7 working days)
- ☐ _____ (other)

Laboratory Number: 12-056

Requested Analysis

Lab ID	Sample Identification	Date Sampled	Time Sampled	Matrix	# of Cont.	NWTPH-HCID	NWTPH-Gx/BTEX	NWTPH-Dx	Volatiles by 8260B	Halogenated Volatiles by 8260B	Semivolatiles by 8270C	PAHs by 8270C / SIM	PCBs by 8082	Pesticides by 8081A	Herbicides by 8151A	Total RCRA Metals (8)	TCLP Metals	HEM by 1664	VPH	EPH	% Moisture
1	Box-7116-1	12/6/06	0915	S	4					X											X
2	Box-7116-2	12/6/06	0918	S	4					X											X
3	Box-7079-1	12/6/06	1230	S	4					X											X
4	Box-7079-2	12/6/06	1233	S	4					X											X

	Signature	Company	Date	Time
Relinquished by		Farallon	12/6/06	1238
Received by		OnSite Env.	12/6/06	1700
Relinquished by				
Received by				
Relinquished by				
Received by				
Reviewed by/Date		Reviewed by/Date		

Comments/Special Instructions:

Chromatograms with final report ☐

DISTRIBUTION LEGEND: White - OnSite Copy Yellow - Report Copy Pink - Client Copy

OnSite Environmental Inc.
14648 NE 95th Street, Redmond, WA 98052 • (425) 883-3881

December 7, 2006

Carla Brock
Farallon Consulting, LLC
975 5th Avenue NW
Issaquah, WA 98027

Re: Analytical Data for Project 663-010
Laboratory Reference No. 0612-047

Dear Carla:

Enclosed are the analytical results and associated quality control data for samples submitted on December 6, 2006.

The standard policy of OnSite Environmental Inc. is to store your samples for 30 days from the date of receipt. If you require longer storage, please contact the laboratory.

We appreciate the opportunity to be of service to you on this project. If you have any questions concerning the data, or need additional information, please feel free to call me.

Sincerely,

David Baumeister
Project Manager

Enclosures

This report pertains to the samples analyzed in accordance with the chain of custody, and is intended only for the use of the individual or company to whom it is addressed.

Date of Report: December 7, 2006
Samples Submitted: December 6, 2006
Laboratory Reference: 0612-047
Project: 663-010

Case Narrative

Samples were collected on December 5, 2006 and received by the laboratory on December 6, 2006. They were maintained at the laboratory at a temperature of 2°C to 6°C except as noted below.

General QA/QC issues associated with the analytical data enclosed in this laboratory report will be indicated with a reference to a comment or explanation on the Data Qualifier page. More complex and involved QA/QC issues will be discussed in detail below.

Halogenated Volatiles EPA 8260B Analysis

Per EPA Method 5035A, samples were received by the laboratory in pre-weighed 40 mL VOA vials within 48 hours of sample collection. They were stored in a freezer at between -7°C and -20°C until extraction or analysis.

Any other QA/QC issues associated with this extraction and analysis will be indicated with a footnote reference and discussed in detail on the Data Qualifier page.

This report pertains to the samples analyzed in accordance with the chain of custody, and is intended only for the use of the individual or company to whom it is addressed.

Date of Report: December 7, 2006
Samples Submitted: December 6, 2006
Laboratory Reference: 0612-047
Project: 663-010

HALOGENATED VOLATILES by EPA 8260B
page 1 of 2

Date Extracted: 12-6-06
Date Analyzed: 12-6-06

Matrix: Soil
Units: mg/kg (ppm)

Lab ID: 12-047-01
Client ID: Box-7224-1

Compound	Results	Flags	PQL
Dichlorodifluoromethane	ND		0.0016
Chloromethane	ND		0.0078
Vinyl Chloride	ND		0.0078
Bromomethane	ND		0.0078
Chloroethane	ND		0.0078
Trichlorofluoromethane	ND		0.0016
1,1-Dichloroethene	ND		0.0016
Iodomethane	ND		0.0078
Methylene Chloride	ND		0.0078
(trans) 1,2-Dichloroethene	ND		0.0016
1,1-Dichloroethane	ND		0.0016
2,2-Dichloropropane	ND		0.0016
(cis) 1,2-Dichloroethene	ND		0.0016
Bromochloromethane	ND		0.0016
Chloroform	ND		0.0016
1,1,1-Trichloroethane	ND		0.0016
Carbon Tetrachloride	ND		0.0016
1,1-Dichloropropene	ND		0.0016
1,2-Dichloroethane	ND		0.0016
Trichloroethene	ND		0.0016
1,2-Dichloropropane	ND		0.0016
Dibromomethane	ND		0.0016
Bromodichloromethane	ND		0.0016
2-Chloroethyl Vinyl Ether	ND		0.0078
(cis) 1,3-Dichloropropene	ND		0.0016
(trans) 1,3-Dichloropropene	ND		0.0016

This report pertains to the samples analyzed in accordance with the chain of custody,
and is intended only for the use of the individual or company to whom it is addressed.

Date of Report: December 7, 2006
Samples Submitted: December 6, 2006
Laboratory Reference: 0612-047
Project: 663-010

HALOGENATED VOLATILES by EPA 8260B
page 2 of 2

Lab ID: 12-047-01
Client ID: Box-7224-1

Compound	Results	Flags	PQL
1,1,2-Trichloroethane	ND		0.0016
Tetrachloroethene	0.070		0.0016
1,3-Dichloropropane	ND		0.0016
Dibromochloromethane	ND		0.0016
1,2-Dibromoethane	ND		0.0016
Chlorobenzene	ND		0.0016
1,1,1,2-Tetrachloroethane	ND		0.0016
Bromoform	ND		0.0016
Bromobenzene	ND		0.0016
1,1,2,2-Tetrachloroethane	ND		0.0016
1,2,3-Trichloropropane	ND		0.0016
2-Chlorotoluene	ND		0.0016
4-Chlorotoluene	ND		0.0016
1,3-Dichlorobenzene	ND		0.0016
1,4-Dichlorobenzene	ND		0.0016
1,2-Dichlorobenzene	ND		0.0016
1,2-Dibromo-3-chloropropane	ND		0.0078
1,2,4-Trichlorobenzene	ND		0.0016
Hexachlorobutadiene	ND		0.0078
1,2,3-Trichlorobenzene	ND		0.0016

Surrogate	Percent Recovery	Control Limits
Dibromofluoromethane	94	71-126
Toluene, d8	100	73-130
4-Bromofluorobenzene	107	70-130

This report pertains to the samples analyzed in accordance with the chain of custody,
and is intended only for the use of the individual or company to whom it is addressed.

Date of Report: December 7, 2006
Samples Submitted: December 6, 2006
Laboratory Reference: 0612-047
Project: 663-010

HALOGENATED VOLATILES by EPA 8260B
page 1 of 2

Date Extracted: 12-6-06
Date Analyzed: 12-6-06

Matrix: Soil
Units: mg/kg (ppm)

Lab ID: 12-047-02
Client ID: Box-7224-2

Compound	Results	Flags	PQL
Dichlorodifluoromethane	ND		0.0014
Chloromethane	ND		0.0071
Vinyl Chloride	ND		0.0071
Bromomethane	ND		0.0071
Chloroethane	ND		0.0071
Trichlorofluoromethane	ND		0.0014
1,1-Dichloroethene	ND		0.0014
Iodomethane	ND		0.0071
Methylene Chloride	ND		0.0071
(trans) 1,2-Dichloroethene	ND		0.0014
1,1-Dichloroethane	ND		0.0014
2,2-Dichloropropane	ND		0.0014
(cis) 1,2-Dichloroethene	ND		0.0014
Bromochloromethane	ND		0.0014
Chloroform	ND		0.0014
1,1,1-Trichloroethane	ND		0.0014
Carbon Tetrachloride	ND		0.0014
1,1-Dichloropropene	ND		0.0014
1,2-Dichloroethane	ND		0.0014
Trichloroethene	ND		0.0014
1,2-Dichloropropane	ND		0.0014
Dibromomethane	ND		0.0014
Bromodichloromethane	ND		0.0014
2-Chloroethyl Vinyl Ether	ND		0.0071
(cis) 1,3-Dichloropropene	ND		0.0014
(trans) 1,3-Dichloropropene	ND		0.0014

This report pertains to the samples analyzed in accordance with the chain of custody,
and is intended only for the use of the individual or company to whom it is addressed.

Date of Report: December 7, 2006
Samples Submitted: December 6, 2006
Laboratory Reference: 0612-047
Project: 663-010

HALOGENATED VOLATILES by EPA 8260B
page 2 of 2

Lab ID: 12-047-02
Client ID: Box-7224-2

Compound	Results	Flags	PQL
1,1,2-Trichloroethane	ND		0.0014
Tetrachloroethene	0.077		0.0014
1,3-Dichloropropane	ND		0.0014
Dibromochloromethane	ND		0.0014
1,2-Dibromoethane	ND		0.0014
Chlorobenzene	ND		0.0014
1,1,1,2-Tetrachloroethane	ND		0.0014
Bromoform	ND		0.0014
Bromobenzene	ND		0.0014
1,1,2,2-Tetrachloroethane	ND		0.0014
1,2,3-Trichloropropane	ND		0.0014
2-Chlorotoluene	ND		0.0014
4-Chlorotoluene	ND		0.0014
1,3-Dichlorobenzene	ND		0.0014
1,4-Dichlorobenzene	ND		0.0014
1,2-Dichlorobenzene	ND		0.0014
1,2-Dibromo-3-chloropropane	ND		0.0071
1,2,4-Trichlorobenzene	ND		0.0014
Hexachlorobutadiene	ND		0.0071
1,2,3-Trichlorobenzene	ND		0.0014

Surrogate	Percent Recovery	Control Limits
Dibromofluoromethane	99	71-126
Toluene, d8	96	73-130
4-Bromofluorobenzene	110	70-130

This report pertains to the samples analyzed in accordance with the chain of custody,
and is intended only for the use of the individual or company to whom it is addressed.

Date of Report: December 7, 2006
Samples Submitted: December 6, 2006
Laboratory Reference: 0612-047
Project: 663-010

HALOGENATED VOLATILES by EPA 8260B
METHOD BLANK QUALITY CONTROL
page 1 of 2

Date Extracted: 12-6-06
Date Analyzed: 12-6-06

Matrix: Soil
Units: mg/kg (ppm)

Lab ID: MB1206S1

Compound	Results	Flags	PQL
Dichlorodifluoromethane	ND		0.0010
Chloromethane	ND		0.0050
Vinyl Chloride	ND		0.0050
Bromomethane	ND		0.0050
Chloroethane	ND		0.0050
Trichlorofluoromethane	ND		0.0010
1,1-Dichloroethene	ND		0.0010
Iodomethane	ND		0.0050
Methylene Chloride	ND		0.0050
(trans) 1,2-Dichloroethene	ND		0.0010
1,1-Dichloroethane	ND		0.0010
2,2-Dichloropropane	ND		0.0010
(cis) 1,2-Dichloroethene	ND		0.0010
Bromochloromethane	ND		0.0010
Chloroform	ND		0.0010
1,1,1-Trichloroethane	ND		0.0010
Carbon Tetrachloride	ND		0.0010
1,1-Dichloropropene	ND		0.0010
1,2-Dichloroethane	ND		0.0010
Trichloroethene	ND		0.0010
1,2-Dichloropropane	ND		0.0010
Dibromomethane	ND		0.0010
Bromodichloromethane	ND		0.0010
2-Chloroethyl Vinyl Ether	ND		0.0050
(cis) 1,3-Dichloropropene	ND		0.0010
(trans) 1,3-Dichloropropene	ND		0.0010

This report pertains to the samples analyzed in accordance with the chain of custody,
and is intended only for the use of the individual or company to whom it is addressed.

Date of Report: December 7, 2006
Samples Submitted: December 6, 2006
Laboratory Reference: 0612-047
Project: 663-010

HALOGENATED VOLATILES by EPA 8260B
METHOD BLANK QUALITY CONTROL
page 2 of 2

Lab ID: MB1206S1

Compound	Results	Flags	PQL
1,1,2-Trichloroethane	ND		0.0010
Tetrachloroethene	ND		0.0010
1,3-Dichloropropane	ND		0.0010
Dibromochloromethane	ND		0.0010
1,2-Dibromoethane	ND		0.0010
Chlorobenzene	ND		0.0010
1,1,1,2-Tetrachloroethane	ND		0.0010
Bromoform	ND		0.0010
Bromobenzene	ND		0.0010
1,1,2,2-Tetrachloroethane	ND		0.0010
1,2,3-Trichloropropane	ND		0.0010
2-Chlorotoluene	ND		0.0010
4-Chlorotoluene	ND		0.0010
1,3-Dichlorobenzene	ND		0.0010
1,4-Dichlorobenzene	ND		0.0010
1,2-Dichlorobenzene	ND		0.0010
1,2-Dibromo-3-chloropropane	ND		0.0050
1,2,4-Trichlorobenzene	ND		0.0010
Hexachlorobutadiene	ND		0.0050
1,2,3-Trichlorobenzene	ND		0.0010

Surrogate	Percent Recovery	Control Limits
Dibromofluoromethane	97	71-126
Toluene, d8	100	73-130
4-Bromofluorobenzene	114	70-130

This report pertains to the samples analyzed in accordance with the chain of custody,
and is intended only for the use of the individual or company to whom it is addressed.

Date of Report: December 7, 2006
Samples Submitted: December 6, 2006
Laboratory Reference: 0612-047
Project: 663-010

HALOGENATED VOLATILES by EPA 8260B
SB/SBD QUALITY CONTROL

Date Extracted: 12-6-06
Date Analyzed: 12-6-06

Matrix: Soil
Units: mg/kg (ppm)

Lab ID: SB1206S1

Compound	Spike Amount	SB	Percent Recovery	SBD	Percent Recovery	Recovery Limits	Flags
1,1-Dichloroethene	0.0500	0.0568	114	0.0560	112	70-130	
Benzene	0.0500	0.0457	91	0.0441	88	70-130	
Trichloroethene	0.0500	0.0432	86	0.0435	87	70-130	
Toluene	0.0500	0.0462	92	0.0461	92	70-130	
Chlorobenzene	0.0500	0.0425	85	0.0440	88	70-130	

	RPD	RPD Limit	Flags
1,1-Dichloroethene	1	11	
Benzene	3	11	
Trichloroethene	1	13	
Toluene	0	11	
Chlorobenzene	4	12	

This report pertains to the samples analyzed in accordance with the chain of custody,
and is intended only for the use of the individual or company to whom it is addressed.

Date of Report: December 7, 2006
Samples Submitted: December 6, 2006
Laboratory Reference: 0612-047
Project: 663-010

% MOISTURE

Date Analyzed: 12-6-06

Client ID	Lab ID	% Moisture
Box-7224-1	12-047-01	16
Box-7224-2	12-047-02	16

This report pertains to the samples analyzed in accordance with the chain of custody,
and is intended only for the use of the individual or company to whom it is addressed.

OnSite Environmental Inc.

Data Qualifiers and Abbreviations

A - Due to a high sample concentration, the amount spiked is insufficient for meaningful MS/MSD recovery data.

B - The analyte indicated was also found in the blank sample.

C - The duplicate RPD is outside control limits due to high result variability when analyte concentrations are within five times the quantitation limit.

E - The value reported exceeds the quantitation range and is an estimate.

F - Surrogate recovery data is not available due to the high concentration of coeluting target compounds.

G - Insufficient sample quantity for duplicate analysis.

H - The analyte indicated is a common laboratory solvent and may have been introduced during sample preparation, and be impacting the sample result.

I - Compound recovery is outside of the control limits.

J - The value reported was below the practical quantitation limit. The value is an estimate.

K - Sample duplicate RPD is outside control limits due to sample inhomogeneity. The sample was re-extracted and re-analyzed with similar results.

L - The RPD is outside of the control limits.

M - Hydrocarbons in the gasoline range (toluene-napthalene) are present in the sample.

O - Hydrocarbons indicative of diesel fuel are present in the sample and are impacting the gasoline result.

P - The RPD of the detected concentrations between the two columns is greater than 40.

Q - Surrogate recovery is outside of the control limits.

S - Surrogate recovery data is not available due to the necessary dilution of the sample.

T - The sample chromatogram is not similar to a typical _____.

U - The analyte was analyzed for, but was not detected above the reported sample quantitation limit.

V - Matrix Spike/Matrix Spike Duplicate recoveries are outside control limits due to matrix effects.

W - Matrix Spike/Matrix Spike Duplicate RPD are outside control limits due to matrix effects.

X - Sample extract treated with a silica gel cleanup procedure.

Y - Sample extract treated with an acid/silica gel cleanup procedure.

Z -

ND - Not Detected at PQL
PQL - Practical Quantitation Limit
RPD - Relative Percent Difference

This report pertains to the samples analyzed in accordance with the chain of custody, and is intended only for the use of the individual or company to whom it is addressed.

Chain of Custody

Page 1 of 1

OnSite Environmental Inc.
14648 NE 95th Street • Redmond, WA 98052
Phone: (425) 883-3881 • Fax: (425) 885-4603

Company: Farallon Consulting
Project Number: 663-010
Project Name: Allison's Norge Village
Project Manager: C. Block
Sampled by:

Turnaround Request (in working days)

(Check One)

- ☒ Same Day
- ☐ 1 Day
- ☐ 2 Day
- ☐ 3 Day
- ☐ Standard (7 working days)
- ☐ _____ (other)

Laboratory Number: 12-047

Requested Analysis

Lab ID	Sample Identification	Date Sampled	Time Sampled	Matrix	# of Cont	NWTPH-HCID	NWTPH-Gx/BTEX	NWTPH-Dx	Volatiles by 8260B	Halogenated Volatiles by 8260B	Semivolatiles by 8270C	PAHs by 8270C / SIM	PCBs by 8082	Pesticides by 8081A	Herbicides by 8151A	Total RCRA Metals (8)	TCLP Metals	HEM by 1664	VPH	EPH	% Moisture
1	Box-7224-1	12/5/06	1500	S	4					X											X
2	Box-7224-2	↓	1503	S	4					X											↓
3	Box-7224-3	↓	1505	S	4																

F I R

	Signature	Company	Date	Time
Relinquished by		Farallon	12/5/06	1545
Received by			12/6/06	1000
Relinquished by				
Received by				
Relinquished by				
Received by				

Comments/Special Instructions:

Reviewed by/Date

Reviewed by/Date

Chromatograms with final report ☐

DISTRIBUTION LEGEND: White - OnSite Copy Yellow - Report Copy Pink - Client Copy

OnSite Environmental Inc.
14648 NE 95th Street, Redmond, WA 98052 • (425) 883-3881

October 3, 2006

Carla Brock
Farallon Consulting, LLC
975 5th Avenue NW
Issaquah, WA 98027

Re: Analytical Data for Project 663-010-010
Laboratory Reference No. 0609-154

Dear Carla:

Enclosed are the analytical results and associated quality control data for samples submitted on September 21, 2006.

The standard policy of OnSite Environmental Inc. is to store your samples for 30 days from the date of receipt. If you require longer storage, please contact the laboratory.

We appreciate the opportunity to be of service to you on this project. If you have any questions concerning the data, or need additional information, please feel free to call me.

Sincerely,

David Baumeister
Project Manager

Enclosures

This report pertains to the samples analyzed in accordance with the chain of custody, and is intended only for the use of the individual or company to whom it is addressed.

Date of Report: October 3, 2006
Samples Submitted: September 21, 2006
Laboratory Reference: 0609-154
Project: 663-010-010

Case Narrative

Samples were collected on September 20, 2006 and received by the laboratory on September 21, 2006. They were maintained at the laboratory at a temperature of 2°C to 6°C except as noted below.

General QA/QC issues associated with the analytical data enclosed in this laboratory report will be indicated with a reference to a comment or explanation on the Data Qualifier page. More complex and involved QA/QC issues will be discussed in detail below.

Halogenated Volatiles EPA 8260B Analysis

Per EPA Method 5035A, samples beginning with SVE 13S were received by the laboratory in pre-weighed 40 mL VOA vials within 48 hours of sample collection. They were stored in a freezer at between -7°C and -20°C until extraction or analysis.

Please note the samples beginning with IDW-SP were not submitted in compliance with the EPA 5035A method.

Any other QA/QC issues associated with this extraction and analysis will be indicated with a footnote reference and discussed in detail on the Data Qualifier page.

This report pertains to the samples analyzed in accordance with the chain of custody, and is intended only for the use of the individual or company to whom it is addressed.

Date of Report: October 3, 2006
Samples Submitted: September 21, 2006
Laboratory Reference: 0609-154
Project: 663-010-010

HALOGENATED VOLATILES by EPA 8260B
page 1 of 2

Date Extracted: 9-28-06
Date Analyzed: 9-28-06

Matrix: Soil
Units: mg/kg (ppm)

Lab ID: 09-154-05
Client ID: IDW-SP-05

Compound	Results	Flags	PQL
Dichlorodifluoromethane	ND		0.0011
Chloromethane	ND		0.0056
Vinyl Chloride	ND		0.0056
Bromomethane	ND		0.0011
Chloroethane	ND		0.0056
Trichlorofluoromethane	ND		0.0011
1,1-Dichloroethene	ND		0.0011
Iodomethane	ND		0.0056
Methylene Chloride	ND		0.0056
(trans) 1,2-Dichloroethene	ND		0.0011
1,1-Dichloroethane	ND		0.0011
2,2-Dichloropropane	ND		0.0011
(cis) 1,2-Dichloroethene	ND		0.0011
Bromochloromethane	ND		0.0011
Chloroform	ND		0.0011
1,1,1-Trichloroethane	ND		0.0011
Carbon Tetrachloride	ND		0.0011
1,1-Dichloropropene	ND		0.0011
1,2-Dichloroethane	ND		0.0011
Trichloroethene	ND		0.0011
1,2-Dichloropropane	ND		0.0011
Dibromomethane	ND		0.0011
Bromodichloromethane	ND		0.0011
2-Chloroethyl Vinyl Ether	ND		0.0056
(cis) 1,3-Dichloropropene	ND		0.0011
(trans) 1,3-Dichloropropene	ND		0.0011

This report pertains to the samples analyzed in accordance with the chain of custody,
and is intended only for the use of the individual or company to whom it is addressed.

Date of Report: October 3, 2006
Samples Submitted: September 21, 2006
Laboratory Reference: 0609-154
Project: 663-010-010

HALOGENATED VOLATILES by EPA 8260B
page 2 of 2

Lab ID: 09-154-05
Client ID: IDW-SP-05

Compound	Results	Flags	PQL
1,1,2-Trichloroethane	ND		0.0011
Tetrachloroethene	0.035		0.0011
1,3-Dichloropropane	ND		0.0011
Dibromochloromethane	ND		0.0011
1,2-Dibromoethane	ND		0.0011
Chlorobenzene	ND		0.0011
1,1,1,2-Tetrachloroethane	ND		0.0011
Bromoform	ND		0.0011
Bromobenzene	ND		0.0011
1,1,2,2-Tetrachloroethane	ND		0.0011
1,2,3-Trichloropropane	ND		0.0011
2-Chlorotoluene	ND		0.0011
4-Chlorotoluene	ND		0.0011
1,3-Dichlorobenzene	ND		0.0011
1,4-Dichlorobenzene	ND		0.0011
1,2-Dichlorobenzene	ND		0.0011
1,2-Dibromo-3-chloropropane	ND		0.0056
1,2,4-Trichlorobenzene	ND		0.0011
Hexachlorobutadiene	ND		0.0056
1,2,3-Trichlorobenzene	ND		0.0011

Surrogate	Percent Recovery	Control Limits
Dibromofluoromethane	81	71-126
Toluene, d8	81	73-130
4-Bromofluorobenzene	85	70-130

This report pertains to the samples analyzed in accordance with the chain of custody,
and is intended only for the use of the individual or company to whom it is addressed.

Date of Report: October 3, 2006
Samples Submitted: September 21, 2006
Laboratory Reference: 0609-154
Project: 663-010-010

HALOGENATED VOLATILES by EPA 8260B

Date Extracted: 9-28-06
Date Analyzed: 9-28-06

Matrix: Soil
Units: mg/kg (ppm)

Lab ID: 09-154-06
Client ID: IDW-SP-06

Compound	Results	Flags	PQL
Dichlorodifluoromethane	ND		0.0011
Chloromethane	ND		0.0054
Vinyl Chloride	ND		0.0054
Bromomethane	ND		0.0011
Chloroethane	ND		0.0054
Trichlorofluoromethane	ND		0.0011
1,1-Dichloroethene	ND		0.0011
Iodomethane	ND		0.0054
Methylene Chloride	ND		0.0054
(trans) 1,2-Dichloroethene	ND		0.0011
1,1-Dichloroethane	ND		0.0011
2,2-Dichloropropane	ND		0.0011
(cis) 1,2-Dichloroethene	ND		0.0011
Bromochloromethane	ND		0.0011
Chloroform	ND		0.0011
1,1,1-Trichloroethane	ND		0.0011
Carbon Tetrachloride	ND		0.0011
1,1-Dichloropropene	ND		0.0011
1,2-Dichloroethane	ND		0.0011
Trichloroethene	ND		0.0011
1,2-Dichloropropane	ND		0.0011
Dibromomethane	ND		0.0011
Bromodichloromethane	ND		0.0011
2-Chloroethyl Vinyl Ether	ND		0.0054
(cis) 1,3-Dichloropropene	ND		0.0011
(trans) 1,3-Dichloropropene	ND		0.0011

This report pertains to the samples analyzed in accordance with the chain of custody,
and is intended only for the use of the individual or company to whom it is addressed.

Date of Report: October 3, 2006
Samples Submitted: September 21, 2006
Laboratory Reference: 0609-154
Project: 663-010-010

HALOGENATED VOLATILES by EPA 8260B
page 2 of 2

Lab ID: 09-154-06
Client ID: IDW-SP-06

Compound	Results	Flags	PQL
1,1,2-Trichloroethane	ND		0.0011
Tetrachloroethene	0.056		0.0011
1,3-Dichloropropane	ND		0.0011
Dibromochloromethane	ND		0.0011
1,2-Dibromoethane	ND		0.0011
Chlorobenzene	ND		0.0011
1,1,1,2-Tetrachloroethane	ND		0.0011
Bromoform	ND		0.0011
Bromobenzene	ND		0.0011
1,1,2,2-Tetrachloroethane	ND		0.0011
1,2,3-Trichloropropane	ND		0.0011
2-Chlorotoluene	ND		0.0011
4-Chlorotoluene	ND		0.0011
1,3-Dichlorobenzene	ND		0.0011
1,4-Dichlorobenzene	ND		0.0011
1,2-Dichlorobenzene	ND		0.0011
1,2-Dibromo-3-chloropropane	ND		0.0054
1,2,4-Trichlorobenzene	ND		0.0011
Hexachlorobutadiene	ND		0.0054
1,2,3-Trichlorobenzene	ND		0.0011

Surrogate	Percent Recovery	Control Limits
Dibromofluoromethane	76	71-126
Toluene, d8	84	73-130
4-Bromofluorobenzene	86	70-130

This report pertains to the samples analyzed in accordance with the chain of custody,
and is intended only for the use of the individual or company to whom it is addressed.

Date of Report: October 3, 2006
Samples Submitted: September 21, 2006
Laboratory Reference: 0609-154
Project: 663-010-010

HALOGENATED VOLATILES by EPA 8260B
page 1 of 2

Date Extracted: 9-28-06
Date Analyzed: 9-28-06

Matrix: Soil
Units: mg/kg (ppm)

Lab ID: 09-154-07
Client ID: IDW-SP-07

Compound	Results	Flags	PQL
Dichlorodifluoromethane	ND		0.0011
Chloromethane	ND		0.0056
Vinyl Chloride	ND		0.0056
Bromomethane	ND		0.0011
Chloroethane	ND		0.0056
Trichlorofluoromethane	ND		0.0011
1,1-Dichloroethene	ND		0.0011
Iodomethane	ND		0.0056
Methylene Chloride	0.0058	H	0.0056
(trans) 1,2-Dichloroethene	ND		0.0011
1,1-Dichloroethane	ND		0.0011
2,2-Dichloropropane	ND		0.0011
(cis) 1,2-Dichloroethene	ND		0.0011
Bromochloromethane	ND		0.0011
Chloroform	ND		0.0011
1,1,1-Trichloroethane	ND		0.0011
Carbon Tetrachloride	ND		0.0011
1,1-Dichloropropene	ND		0.0011
1,2-Dichloroethane	ND		0.0011
Trichloroethene	ND		0.0011
1,2-Dichloropropane	ND		0.0011
Dibromomethane	ND		0.0011
Bromodichloromethane	ND		0.0011
2-Chloroethyl Vinyl Ether	ND		0.0056
(cis) 1,3-Dichloropropene	ND		0.0011
(trans) 1,3-Dichloropropene	ND		0.0011

This report pertains to the samples analyzed in accordance with the chain of custody,
and is intended only for the use of the individual or company to whom it is addressed.

Date of Report: October 3, 2006
Samples Submitted: September 21, 2006
Laboratory Reference: 0609-154
Project: 663-010-010

HALOGENATED VOLATILES by EPA 8260B
page 2 of 2

Lab ID: 09-154-07
Client ID: IDW-SP-07

Compound	Results	Flags	PQL
1,1,2-Trichloroethane	ND		0.0011
Tetrachloroethene	0.035		0.0011
1,3-Dichloropropane	ND		0.0011
Dibromochloromethane	ND		0.0011
1,2-Dibromoethane	ND		0.0011
Chlorobenzene	ND		0.0011
1,1,1,2-Tetrachloroethane	ND		0.0011
Bromoform	ND		0.0011
Bromobenzene	ND		0.0011
1,1,2,2-Tetrachloroethane	ND		0.0011
1,2,3-Trichloropropane	ND		0.0011
2-Chlorotoluene	ND		0.0011
4-Chlorotoluene	ND		0.0011
1,3-Dichlorobenzene	ND		0.0011
1,4-Dichlorobenzene	ND		0.0011
1,2-Dichlorobenzene	ND		0.0011
1,2-Dibromo-3-chloropropane	ND		0.0056
1,2,4-Trichlorobenzene	ND		0.0011
Hexachlorobutadiene	ND		0.0056
1,2,3-Trichlorobenzene	ND		0.0011

Surrogate	Percent Recovery	Control Limits
Dibromofluoromethane	75	71-126
Toluene, d8	80	73-130
4-Bromofluorobenzene	86	70-130

This report pertains to the samples analyzed in accordance with the chain of custody,
and is intended only for the use of the individual or company to whom it is addressed.

Date of Report: October 3, 2006
Samples Submitted: September 21, 2006
Laboratory Reference: 0609-154
Project: 663-010-010

HALOGENATED VOLATILES by EPA 8260B
METHOD BLANK QUALITY CONTROL
page 1 of 2

Date Extracted: 9-28-06
Date Analyzed: 9-28-06

Matrix: Soil
Units: mg/kg (ppm)

Lab ID: MB0928S1

Compound	Results	Flags	PQL
Dichlorodifluoromethane	0.0023		0.0010
Chloromethane	ND		0.0050
Vinyl Chloride	ND		0.0050
Bromomethane	ND		0.0010
Chloroethane	ND		0.0050
Trichlorofluoromethane	ND		0.0010
1,1-Dichloroethene	ND		0.0010
Iodomethane	ND		0.0050
Methylene Chloride	ND		0.0050
(trans) 1,2-Dichloroethene	ND		0.0010
1,1-Dichloroethane	ND		0.0010
2,2-Dichloropropane	ND		0.0010
(cis) 1,2-Dichloroethene	ND		0.0010
Bromochloromethane	ND		0.0010
Chloroform	ND		0.0010
1,1,1-Trichloroethane	ND		0.0010
Carbon Tetrachloride	ND		0.0010
1,1-Dichloropropene	ND		0.0010
1,2-Dichloroethane	ND		0.0010
Trichloroethene	ND		0.0010
1,2-Dichloropropane	ND		0.0010
Dibromomethane	ND		0.0010
Bromodichloromethane	ND		0.0010
2-Chloroethyl Vinyl Ether	ND		0.0050
(cis) 1,3-Dichloropropene	ND		0.0010
(trans) 1,3-Dichloropropene	ND		0.0010

This report pertains to the samples analyzed in accordance with the chain of custody,
and is intended only for the use of the individual or company to whom it is addressed.

Date of Report: October 3, 2006
Samples Submitted: September 21, 2006
Laboratory Reference: 0609-154
Project: 663-010-010

HALOGENATED VOLATILES by EPA 8260B
METHOD BLANK QUALITY CONTROL
page 2 of 2

Lab ID: MB0928S1

Compound	Results	Flags	PQL
1,1,2-Trichloroethane	ND		0.0010
Tetrachloroethene	ND		0.0010
1,3-Dichloropropane	ND		0.0010
Dibromochloromethane	ND		0.0010
1,2-Dibromoethane	ND		0.0010
Chlorobenzene	ND		0.0010
1,1,1,2-Tetrachloroethane	ND		0.0010
Bromoform	ND		0.0010
Bromobenzene	ND		0.0010
1,1,2,2-Tetrachloroethane	ND		0.0010
1,2,3-Trichloropropane	ND		0.0010
2-Chlorotoluene	ND		0.0010
4-Chlorotoluene	ND		0.0010
1,3-Dichlorobenzene	ND		0.0010
1,4-Dichlorobenzene	ND		0.0010
1,2-Dichlorobenzene	ND		0.0010
1,2-Dibromo-3-chloropropane	ND		0.0050
1,2,4-Trichlorobenzene	ND		0.0010
Hexachlorobutadiene	ND		0.0050
1,2,3-Trichlorobenzene	ND		0.0010

Surrogate	Percent Recovery	Control Limits
Dibromofluoromethane	75	71-126
Toluene, d8	84	73-130
4-Bromofluorobenzene	90	70-130

This report pertains to the samples analyzed in accordance with the chain of custody,
and is intended only for the use of the individual or company to whom it is addressed.

Date of Report: October 3, 2006
Samples Submitted: September 21, 2006
Laboratory Reference: 0609-154
Project: 663-010-010

HALOGENATED VOLATILES by EPA 8260B
MS/MSD QUALITY CONTROL

Date Extracted: 9-28-06
Date Analyzed: 9-28-06

Matrix: Soil
Units: mg/kg (ppm)

Lab ID: 09-154-05

Compound	Sample Amount	Spike Amount	MS	Percent Recovery	MSD	Percent Recovery	Recovery Limits	Flags
1,1-Dichloroethene	ND	0.0500	0.0705	141	0.0658	132	53-141	
Benzene	ND	0.0500	0.0558	112	0.0551	110	66-135	
Trichloroethene	ND	0.0500	0.0396	79	0.0410	82	69-130	
Toluene	ND	0.0500	0.0517	103	0.0568	114	72-127	
Chlorobenzene	ND	0.0500	0.0458	92	0.0441	88	68-134	

	RPD	RPD Limit	Flags
1,1-Dichloroethene	7	11	
Benzene	1	11	
Trichloroethene	3	13	
Toluene	9	11	
Chlorobenzene	4	12	

This report pertains to the samples analyzed in accordance with the chain of custody,
and is intended only for the use of the individual or company to whom it is addressed.

Date of Report: October 3, 2006
Samples Submitted: September 21, 2006
Laboratory Reference: 0609-154
Project: 663-010-010

% MOISTURE

Date Analyzed: 9-22-06

Client ID	Lab ID	% Moisture
IDW- SP-05	09-154-05	10
IDW- SP-06	09-154-06	8
IDW- SP-07	09-154-07	10

This report pertains to the samples analyzed in accordance with the chain of custody,
and is intended only for the use of the individual or company to whom it is addressed.

OnSite Environmental Inc.

Data Qualifiers and Abbreviations

A - Due to a high sample concentration, the amount spiked is insufficient for meaningful MS/MSD recovery data.

B - The analyte indicated was also found in the blank sample.

C - The duplicate RPD is outside control limits due to high result variability when analyte concentrations are within five times the quantitation limit.

E - The value reported exceeds the quantitation range and is an estimate.

F - Surrogate recovery data is not available due to the high concentration of coeluting target compounds.

G - Insufficient sample quantity for duplicate analysis.

H - The analyte indicated is a common laboratory solvent and may have been introduced during sample preparation, and be impacting the sample result.

I - Compound recovery is outside of the control limits.

J - The value reported was below the practical quantitation limit. The value is an estimate.

K - Sample duplicate RPD is outside control limits due to sample inhomogeneity. The sample was re-extracted and re-analyzed with similar results.

L - The RPD is outside of the control limits.

M - Hydrocarbons in the gasoline range (toluene-napthalene) are present in the sample.

O - Hydrocarbons indicative of diesel fuel are present in the sample and are impacting the gasoline result.

P - The RPD of the detected concentrations between the two columns is greater than 40.

Q - Surrogate recovery is outside of the control limits.

S - Surrogate recovery data is not available due to the necessary dilution of the sample.

T - The sample chromatogram is not similar to a typical _____.

U - The analyte was analyzed for, but was not detected above the reported sample quantitation limit.

V - Matrix Spike/Matrix Spike Duplicate recoveries are outside control limits due to matrix effects.

W - Matrix Spike/Matrix Spike Duplicate RPD are outside control limits due to matrix effects.

X - Sample extract treated with a silica gel cleanup procedure.

Y - Sample extract treated with an acid/silica gel cleanup procedure.

Z -

ND - Not Detected at PQL
PQL - Practical Quantitation Limit
RPD - Relative Percent Difference

This report pertains to the samples analyzed in accordance with the chain of custody, and is intended only for the use of the individual or company to whom it is addressed.

Chain of Custody

OnSite Environmental Inc.
14648 NE 95th Street • Redmond, WA 98052
Phone: (425) 883-3881 • Fax: (425) 885-4603

Company: Farallon Consulting
Project Number: 663-010-010
Project Name: Allison's Nonga Village
Project Manager: Carla Brock
Sampled by: BDG

Turnaround Request (in working days)

(Check One)

- ☐ Same Day
- ☐ 1 Day
- ☐ 2 Day
- ☐ 3 Day
- ☒ Standard (7 working days) (TPH analysis 5 working days)
- ☐ _____ (other)

Laboratory Number: 09-154

Requested Analysis

Lab ID	Sample Identification	Date Sampled	Time Sampled	Matrix	# of Cont.	NWTPH-HCID	NWTPH-Gx/BTEX	NWTPH-Dx	Volatiles by 8260B	Halogenated Volatiles by 8260B	Semivolatiles by 8270C	PAHs by 8270C / SIM	PCBs by 8082	Pesticides by 8081A	Herbicides by 8151A	Total RCRA Metals (8)	TCLP Metals	HEM by 1664	VPH	EPH	% Moisture
1	SVE135-5.0-5.5	9/20/06	08:00	Soil	4																
2	SVE 135-9.5-10.0		08:05																		
3	SVE 135-15.0-15.5		08:10																		
4	SVE 135-20.0		08:14																		
5	IDW-SP-05		10:20		1					⊗											⊗
6	IDW-SP-06		10:22		1				⊗												⊗
7	IDW-SP-07		10:25		1				⊗												⊗

BDG

	Signature	Company	Date	Time
Relinquished by	(Brian Gouvin)	Farallon	9/20/06	14:30
Received by		Centco ETI	9/21/06	1110
Relinquished by				
Received by				
Relinquished by				
Received by				
Reviewed by/Date		Reviewed by/Date		

Comments/Special Instructions:

Hold for analysis as indicated by C. Brock.
Email results to cbrock@farallonconsulting.com
⊗ Added 9/22/06 DB

Chromatograms with final report ☐

DISTRIBUTION LEGEND: White - OnSite Copy Yellow - Report Copy Pink - Client Copy

APPENDIX C
HISTORICAL SOIL ANALYTICAL RESULTS

CLEANUP ACTION PROGRESS REPORT
AUGUST 2006 TO AUGUST 2007
Allison's Norge Village (AKA Eastside Laundry)
120 Northeast Turner Street
Olympia, Washington
VCP # SW 0370

Farallon PN: 663-010

Table C-1
Historical Soil Analytical Results
Allison's Norge Village
Olympia, Washington
Farallon PN: 663-010

Location Identification	Sample Identification	Date Sampled	Sampled By	Depth (feet)[1]	Analytical Results (milligrams per kilogram)				
					PCE[2]	TCE[2]	cis-1,2-Dichloroethene[2]	trans-1,2-Dichloroethene[2]	Vinyl Chloride[2]
B1	B1	3/2/2000	Saltbush	14	**0.51**	ND	ND	ND	ND
B2	B2	3/2/2000	Saltbush	14	**0.27**	ND	ND	ND	ND
B3	B3	3/2/2000	Saltbush	14	**0.17**	ND	ND	ND	ND
B4	B4	3/2/2000	Saltbush	14	**0.54**	ND	ND	ND	ND
B5	B5	3/2/2000	Saltbush	14	**0.44**	ND	ND	ND	ND
EB-1	EB-1-3	4/4/2001	G-Logics	3	**0.22**	ND	ND	ND	ND
	EB-1-9	4/4/2001	G-Logics	9	**0.41**	ND	ND	ND	ND
	EB-1-9	4/4/2001	G-Logics	Duplicate	**0.41**	ND	ND	ND	ND
EB-2	EB-2-8	4/4/2001	G-Logics	8	**0.41**	ND	ND	ND	ND
	EB-2-16	4/4/2001	G-Logics	16	**0.17**	ND	ND	ND	ND
	EB-2-22	4/4/2001	G-Logics	22	**2.7**	ND	ND	ND	ND
	EB-2-32	4/4/2001	G-Logics	32	**0.2**	ND	ND	ND	ND
EB-3	EB-3-4	4/4/2001	G-Logics	4	ND	ND	ND	ND	ND
	EB-3-12	4/4/2001	G-Logics	12	**0.28**	ND	ND	ND	ND
	EB-3-19	4/4/2001	G-Logics	19	**0.7**	ND	ND	ND	ND
	EB-3-31	4/4/2001	G-Logics	31	ND	ND	ND	ND	ND
EB-4	EB-4-12	4/4/2001	G-Logics	12	**0.14**	ND	ND	ND	ND
	EB-4-18	4/4/2001	G-Logics	18	**0.21**	ND	ND	ND	ND
	EB-4-24	4/4/2001	G-Logics	24	**0.08**	ND	ND	ND	ND
	EB-4-24	4/4/2001	G-Logics	Duplicate	**0.08**	ND	ND	ND	ND
	EB-4-28	4/4/2001	G-Logics	28	**0.09**	ND	ND	ND	ND
	EB-4-31	4/4/2001	G-Logics	31	**1.2**	ND	ND	ND	ND
MTCA Cleanup Levels for Soil					**0.05**[3]	**0.03**[3]	**800**[4]	**1,600**[4]	**240**[4]

Table C-1
Historical Soil Analytical Results
Allison's Norge Village
Olympia, Washington
Farallon PN: 663-010

Location Identification	Sample Identification	Date Sampled	Sampled By	Depth (feet)[1]	Analytical Results (milligrams per kilogram)				
					PCE[2]	TCE[2]	cis-1,2-Dichloroethene[2]	trans-1,2-Dichloroethene[2]	Vinyl Chloride[2]
EB-5	EB-5-8	4/4/2001	G-Logics	8	**0.1**	ND	ND	ND	ND
	EB-5-20	4/4/2001	G-Logics	20	**0.16**	ND	ND	ND	ND
	EB-5-22	4/4/2001	G-Logics	22	**0.12**	ND	ND	ND	ND
	EB-5-22	4/4/2001	G-Logics	Duplicate	**0.1**	ND	ND	ND	ND
	EB-5-26	4/4/2001	G-Logics	26	ND	ND	ND	ND	ND
	EB-5-26	4/4/2001	G-Logics	Duplicate	ND	ND	ND	ND	ND
EB-6	EB-6-16	4/4/2001	G-Logics	16	ND	ND	ND	ND	ND
	EB-6-24	4/4/2001	G-Logics	24	ND	ND	ND	ND	ND
EB-7	EB-7-4	4/4/2001	G-Logics	4	**2.23**	ND	ND	ND	ND
	EB-7-12	4/4/2001	G-Logics	12	**0.13**	ND	ND	ND	ND
	EB-7-16	4/4/2001	G-Logics	16	**0.57**	ND	ND	ND	ND
	EB-7-22	4/4/2001	G-Logics	22	**0.41**	ND	ND	ND	ND
	EB-7-28	4/4/2001	G-Logics	28	**0.18**	ND	ND	ND	ND
	EB-7-31	4/4/2001	G-Logics	31	**0.33**	ND	ND	ND	ND
EB-8	EB-8-8	4/4/2001	G-Logics	8	**0.08**	ND	ND	ND	ND
	EB-8-18	4/4/2001	G-Logics	18	**0.35**	ND	ND	ND	ND
	EB-8-28	4/4/2001	G-Logics	28	**0.48**	ND	ND	ND	ND
	EB-8-32	4/4/2001	G-Logics	32	**0.13**	ND	ND	ND	ND
MTCA Cleanup Levels for Soil					**0.05**[3]	**0.03**[3]	**800**[4]	**1,600**[4]	**240**[4]

Table C-1
Historical Soil Analytical Results
Allison's Norge Village
Olympia, Washington
Farallon PN: 663-010

Location Identification	Sample Identification	Date Sampled	Sampled By	Depth (feet)[1]	Analytical Results (milligrams per kilogram)				
					PCE[2]	TCE[2]	cis-1,2-Dichloroethene[2]	trans-1,2-Dichloroethene[2]	Vinyl Chloride[2]
EB-9	EB-9-8	4/4/2001	G-Logics	8	ND	ND	ND	ND	ND
	EB-9-18	4/4/2001	G-Logics	18	ND	ND	ND	ND	ND
	EB-9-20	4/4/2001	G-Logics	20	ND	ND	ND	ND	ND
	EB-9-20	4/4/2001	G-Logics	Duplicate	ND	ND	ND	ND	ND
EB-10	EB10-5	12/6/2004	Farallon	5	**1.1**	< 0.0012	< 0.0012	< 0.0012	< 0.0012
EB-11	EB11-5.5	12/6/2004	Farallon	5.5	**0.11**	< 0.0012	< 0.0012	< 0.0012	< 0.0012
IB-1	IB-1-3	4/4/2001	G-Logics	3	**8.2**	ND	ND	ND	ND
	IB-1-9	4/4/2001	G-Logics	9	**0.16**	ND	ND	ND	ND
	IB-1-15	4/4/2001	G-Logics	15	**0.29**	ND	ND	ND	ND
IB-2	IB-2-5	4/4/2001	G-Logics	5	**39.9**	ND	ND	ND	ND
	IB-2-9	4/4/2001	G-Logics	9	**1.02**	ND	ND	ND	ND
	IB-2-15	4/4/2001	G-Logics	15	**1.6**	ND	ND	ND	ND
IB-3	IB-3-5	4/4/2001	G-Logics	5	**35**	ND	ND	ND	ND
	IB-3-9	4/4/2001	G-Logics	9	**0.16**	ND	ND	ND	ND
	IB-3-15	4/4/2001	G-Logics	15	**0.72**	ND	ND	ND	ND
	IB-3-20	4/4/2001	G-Logics	20	**2.9**	ND	ND	ND	ND
IB-4	IB4-10	12/6/2004	Farallon	10	**0.57**	< 0.0011	< 0.0011	< 0.0011	< 0.0011
	IB4-18	12/6/2004	Farallon	18	**0.57**	< 0.0013	< 0.0013	< 0.0013	< 0.0013
IB-5	IB5-4.5	12/6/2004	Farallon	4.5	**1.6**	< 0.0012	< 0.0012	< 0.0012	< 0.0012
	IB5-18	12/6/2004	Farallon	18	**0.59**	< 0.0013	< 0.0013	< 0.0013	< 0.0013
MTCA Cleanup Levels for Soil					**0.05[3]**	**0.03[3]**	**800[4]**	**1,600[4]**	**240[4]**

Table C-1
Historical Soil Analytical Results
Allison's Norge Village
Olympia, Washington
Farallon PN: 663-010

Location Identification	Sample Identification	Date Sampled	Sampled By	Depth (feet)[1]	Analytical Results (milligrams per kilogram)				
					PCE[2]	TCE[2]	cis-1,2-Dichloroethene[2]	trans-1,2-Dichloroethene[2]	Vinyl Chloride[2]
SB-1	SB-1-10	8/1/2001	G-Logics	10	**0.22**	ND	ND	ND	ND
	SB-1-20	8/1/2001	G-Logics	20	**0.39**	ND	ND	ND	ND
	SB-1-30	8/1/2001	G-Logics	30	**0.15**	ND	ND	ND	ND
	SB-1-35	8/1/2001	G-Logics	35	**0.16**	ND	ND	ND	ND
	SB-1-40	8/1/2001	G-Logics	40	**0.28**	ND	ND	ND	ND
	SB-1-45	8/1/2001	G-Logics	45	**0.19**	ND	ND	ND	ND
	SB-1-50	8/1/2001	G-Logics	50	ND	ND	ND	ND	ND
	SB-1-55	8/1/2001	G-Logics	55	ND	ND	ND	ND	ND
	SB-1-60	8/1/2001	G-Logics	60	ND	ND	ND	ND	ND
	SB-1-70	8/1/2001	G-Logics	70	ND	ND	ND	ND	ND
	SB-1-75	8/1/2001	G-Logics	75	ND	ND	ND	ND	ND
	SB-1-80	8/1/2001	G-Logics	80	ND	ND	ND	ND	ND
	SB-1-80	8/1/2001	G-Logics	Duplicate	ND	ND	ND	ND	ND
MTCA Cleanup Levels for Soil					**0.05[3]**	**0.03[3]**	**800[4]**	**1,600[4]**	**240[4]**

Table C-1
Historical Soil Analytical Results
Allison's Norge Village
Olympia, Washington
Farallon PN: 663-010

Location Identification	Sample Identification	Date Sampled	Sampled By	Depth (feet)[1]	Analytical Results (milligrams per kilogram)				
					PCE[2]	TCE[2]	cis-1,2-Dichloroethene[2]	trans-1,2-Dichloroethene[2]	Vinyl Chloride[2]
SB-2	SB-2-10	8/1/2001	G-Logics	10	**0.82**	ND	ND	ND	ND
	SB-2-20	8/1/2001	G-Logics	20	ND	ND	ND	ND	ND
	SB-2-20	8/1/2001	G-Logics	Duplicate	ND	ND	ND	ND	ND
	SB-2-30	8/1/2001	G-Logics	30	ND	ND	ND	ND	ND
	SB-2-35	8/1/2001	G-Logics	35	**0.17**	ND	ND	ND	ND
	SB-2-40	8/1/2001	G-Logics	40	ND	ND	ND	ND	ND
	SB-2-45	8/1/2001	G-Logics	45	ND	ND	ND	ND	ND
	SB-2-50	8/1/2001	G-Logics	50	**0.1**	ND	ND	ND	ND
	SB-2-55	8/1/2001	G-Logics	55	**0.16**	ND	ND	ND	ND
	SB-2-60	8/1/2001	G-Logics	60	**0.13**	ND	ND	ND	ND
	SB-2-65	8/1/2001	G-Logics	65	**0.26**	ND	ND	ND	ND
	SB-2-70	8/1/2001	G-Logics	70	**0.39**	ND	ND	ND	ND
	SB-2-75	8/1/2001	G-Logics	75	**0.22**	ND	ND	ND	ND
	SB-2-80	8/1/2001	G-Logics	80	**0.77**	ND	ND	ND	ND
MTCA Cleanup Levels for Soil					**0.05**[3]	**0.03**[3]	**800**[4]	**1,600**[4]	**240**[4]

Table C-1
Historical Soil Analytical Results
Allison's Norge Village
Olympia, Washington
Farallon PN: 663-010

Location Identification	Sample Identification	Date Sampled	Sampled By	Depth (feet)[1]	Analytical Results (milligrams per kilogram)				
					PCE[2]	TCE[2]	cis-1,2-Dichloroethene[2]	trans-1,2-Dichloroethene[2]	Vinyl Chloride[2]
MW-1	MW-1-10	8/2/2001	G-Logics	10	ND	ND	ND	ND	ND
	MW-1-10	8/2/2001	G-Logics	Duplicate	ND	ND	ND	ND	ND
	MW-1-20	8/2/2001	G-Logics	20	ND	ND	ND	ND	ND
	MW-1-30	8/2/2001	G-Logics	30	ND	ND	ND	ND	ND
	MW-1-35	8/2/2001	G-Logics	35	ND	ND	ND	ND	ND
	MW-1-40	8/2/2001	G-Logics	40	ND	ND	ND	ND	ND
	MW-1-45	8/2/2001	G-Logics	45	ND	ND	ND	ND	ND
	MW-1-50	8/2/2001	G-Logics	50	ND	ND	ND	ND	ND
	MW-1-55	8/2/2001	G-Logics	55	ND	ND	ND	ND	ND
	MW-1-60	8/2/2001	G-Logics	60	ND	ND	ND	ND	ND
MW-2	MW-2-60	8/22/2001	G-Logics	60	**0.14**	ND	ND	ND	ND
	MW-2-65	8/22/2001	G-Logics	65	**0.13**	ND	ND	ND	ND
	MW-2-70	8/22/2001	G-Logics	70	**0.08**	ND	ND	ND	ND
	MW-2-75	8/22/2001	G-Logics	75	**0.1**	ND	ND	ND	ND
	MW-2-80	8/22/2001	G-Logics	80	**0.27**	ND	ND	ND	ND
	MW-2-85	8/22/2001	G-Logics	85	0.02	ND	ND	ND	ND
	MW-2-90	8/22/2001	G-Logics	90	ND	ND	ND	ND	ND
	MW-2-95	8/22/2001	G-Logics	95	ND	ND	ND	ND	ND
	MW-2-100	8/22/2001	G-Logics	100	ND	ND	ND	ND	ND
	MW-2-105	8/22/2001	G-Logics	105	ND	ND	ND	ND	ND
	MW-2-105	8/22/2001	G-Logics	Duplicate	ND	ND	ND	ND	ND
MTCA Cleanup Levels for Soil					**0.05**[3]	**0.03**[3]	**800**[4]	**1,600**[4]	**240**[4]

Table C-1
Historical Soil Analytical Results
Allison's Norge Village
Olympia, Washington
Farallon PN: 663-010

Location Identification	Sample Identification	Date Sampled	Sampled By	Depth (feet)[1]	Analytical Results (milligrams per kilogram)				
					PCE[2]	TCE[2]	cis-1,2-Dichloroethene[2]	trans-1,2-Dichloroethene[2]	Vinyl Chloride[2]
MW-5	MW5-36	12/9/2004	Farallon	36	**0.11**	< 0.0010	< 0.0010	< 0.0010	< 0.0010
	MW5-46	12/9/2004	Farallon	46	**0.19**	< 0.0010	< 0.0010	< 0.0010	< 0.0010
	MW5-73.5	12/10/2004	Farallon	73.5	**0.51**	< 0.0010	< 0.0010	< 0.0010	< 0.0010
	MW5-99	12/10/2004	Farallon	99	0.0033	< 0.0011	< 0.0011	< 0.0011	< 0.0011
MW-6	MW6-10	12/8/2004	Farallon	10	**18**	< 0.11	< 0.11	< 0.11	< 0.11
	MW6-15	12/8/2004	Farallon	15	**0.50**	< 0.0011	< 0.0011	< 0.0011	< 0.0011
	MW6-34.5	12/8/2004	Farallon	34.5	**0.12**	< 0.0010	< 0.0010	< 0.0010	< 0.0010
MW-7	MW7-5.5	12/13/2004	Farallon	5.5	0.030	< 0.0011	< 0.0011	< 0.0011	< 0.0011
	MW7-38	12/13/2004	Farallon	38	0.0052	< 0.0010	< 0.0010	< 0.0010	< 0.0010
	MW7-88	12/13/2004	Farallon	88	0.0038	< 0.0011	< 0.0011	< 0.0011	< 0.0011
MTCA Cleanup Levels for Soil					**0.05[3]**	**0.03[3]**	**800[4]**	**1,600[4]**	**240[4]**

NOTES:

Results in **BOLD** denote concentrations are above MTCA cleanup levels.

< denotes concentration is less than the laboratory practical quantitation limit (PQL) indicated.

[1]Depth in feet below ground surface.

[2]Analyzed by U.S. Environmental Protection Agency Method 8260B.

[3]Washington State Department of Ecology Model Toxics Control Act Cleanup Regulation (MTCA) Method A Soil Cleanup Level, Chapter 173-340 of the Washington Administrative Code, as amended February 2001.

[4]MTCA Cleanup Levels and Risk Calculations (CLARC) Method B Soil Cleanup Level, Version 3.1, updated November 2001.

Farallon = Farallon Consulting, L.L.C.

HVOCs = halogenated volatile organic compounds

ND= not detected above the laboratory PQL

PCE = tetrachloroethene

TCE = trichloroethene

APPENDIX D
SVE SYSTEM AS-BUILT DRAWINGS

CLEANUP ACTION PROGRESS REPORT
AUGUST 2006 TO AUGUST 2007
Allison's Norge Village (AKA Eastside Laundry)
120 Northeast Turner Street
Olympia, Washington
VCP # SW 0370

Farallon PN: 663-010

SOIL VAPOR EXTRACTION SYSTEM AS-BUILTS

ALLISON'S NORGE VILLAGE
120 NORTH EAST TURNER STREET
OLYMPIA, WASHINGTON

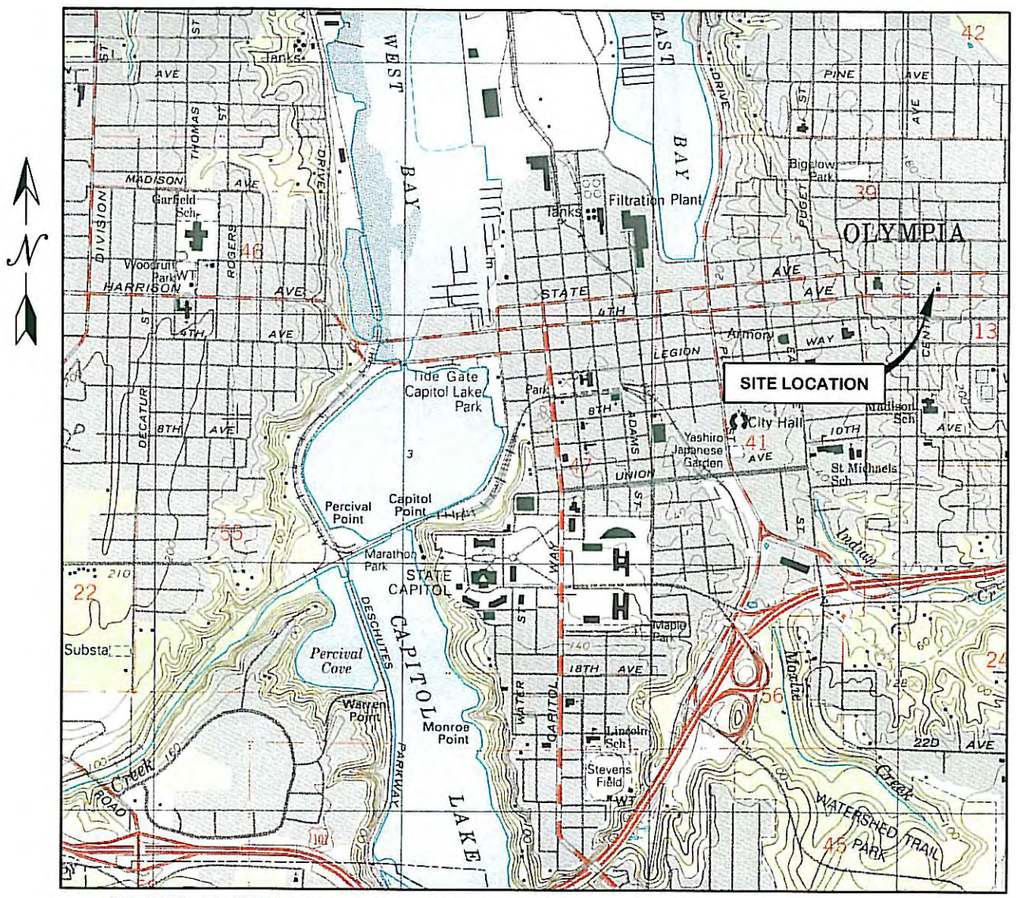

REFERENCE: 7.5 MINUTE USGS QUADRANGLE TUMWATER, WASHINGTON. DATED 1997

SITE LOCATION MAP
(NOT TO SCALE)

DRAWING INDEX

SHEET NO.	DRAWING TITLE
1	TITLE SHEET, SITE LOCATION MAP, AND DRAWING INDEX
2	GENERAL NOTES, LEGEND, SYMBOLS, AND ABBREVIATIONS
3	SITE PLAN WITH SVE SYSTEM AND COMPOUND DETAIL
4	DETAILS
5	DETAILS
6	PROCESS AND INSTRUMENTATION DIAGRAM

TERRY W. MONTOYA
STATE OF WASHINGTON
37827
REGISTERED
PROFESSIONAL ENGINEER
8/15/07

EXPIRES: 06-22-2008

	8/15/07	AS-BUILTS	TM/DEW	TM	RM
	11/02/06	ISSUED FOR CONSTRUCTION	TM/DEW	RC/TM	RM
	DATE	DESCRIPTION	BY	CKD.	APP.

PREPARED BY
FARALLON CONSULTING
975 5th Avenue Northwest
Issaquah, WA 98027

PREPARED FOR
MR. WILBUR ALLISON
C/O MR. DAVID D. CULLEN
WEST HILLS OFFICE PARK, BUILDING 11
1800 COOPER POINT ROAD SOUTHWEST
OLYMPIA, WASHINGTON

ALLISON'S NORGE VILLAGE
SOIL VAPOR EXTRACTION SYSTEM
OLYMPIA, WASHINGTON
TITLE SHEET,
SITE LOCATION MAP, AND
DRAWING INDEX

SCALE	AS SHOWN
PROJECT NO	663-010
FILE NAME	AS-BUILT
SHEET NO	1
OF	6

ELECTRICAL ABBREVIATIONS

A/AMP	AMP
AC	ALTERNATING CURRENT
BD	BUS DUCT
C	CURRENT
CB	CIRCUIT BREAKER
CLG	CEILING
DC	DIRECT CURRENT
DIS	DISCONNECT
DP	DOUBLE POLE
DT	DOUBLE THROW
EG	ENCLOSED AND GASKETED
E(OH)	ELECTRICAL (OVERHEAD)
E(UG)	ELECTRICAL (UNDERGROUND)
EMER	EMERGENCY
EPO	EMERGENCY POWER OFF
EMT	ELECTRICAL METALLIC TUBING
EXP	EXPOSED
FBO	FURNISHED BY OTHERS
FLEX	FLEXIBLE METAL CONDUIT
FRN	DUAL ELEMENT FUSE
GEN	GENERATOR
GFIC	GROUND FAULT INTERRUPTER
GND	GROUND
GRC	GALVANIZED RIGID CONDUIT
HOA	HAND-OFF-AUTO SWITCH
IRD	INFRARED DETECTOR
HP	HORSE POWER
HZ	CYCLES PER SECOND
JB	JUNCTION BOX
LFMC	LIQUID TIGHT FLEXIBLE METAL CONDUIT
M	MOTOR/MOTOR STARTER COIL
MCC	MOTOR CONTROL CENTER
MCP	MOTOR CIRCUIT PROTECTOR
NC	NORMALLY CLOSED
NEC	NATIONAL ELECTRIC CODE
NEMA	NATIONAL ELECTRICAL MANUFACTURERS ASSOCIATION
NF	NON-FUSED
NO	NORMALLY OPEN
OL	OVERLOADS
PBS	PUSHBUTTON
PF	POWER FACTOR
PL	PILOT LIGHT
PLC	PROGRAMMABLE LOGIC CONTROLLER
RC	RIGID CONDUIT
RCPT	RECEPTACLE
SN	SOLID NEUTRAL
SP	SINGLE POLE
ST	SINGLE THROW
SW	SWITCH
TF/TRAN	TRANSFORMER
UF	UNDERFLOOR
UG	UNDERGROUND
V	VOLTS
VFD	VARIABLE FREQUENCY DRIVE
VP	VAPOR PROOF
WHT	WHITE
WP	WEATHER PROOF
XP	EXPLOSION PROOF

STANDARD ABBREVIATIONS

AF	AIR FILTER
AB	AGGREGATE BASE
AC	ASPHALTIC CONCRETE
APPROX	APPROXIMATELY
AF	AIR FILTER
AS	AIR SPARGE
BF	BLIND FLANGE
B.G.S.	BELOW GROUND SURFACE
BLDG	BUILDING
BOP	BOTTOM OF PIPE
BV	BALL VALVE
CONC	CONCRETE
CPLG	COUPLING
℄ /CL	CENTERLINE
CV	CONTROL VALVE/CHECK VALVE
DC	DOUBLE CONTAINED
Ø/DIA	DIAMETER
DWG	DRAWING
DP	DUAL PHASE
DPI	DIFFERENTIAL PRESSURE INDICATOR
EF	EACH FACE
EL/ELEV	ELEVATION
ELEC	ELECTRICAL
ELB	ELBOW
EPDM	ETHYLENE PROPYLENE RUBBER
EXIST/(E)	EXISTING
EXP	EXPANSION
EW	EACH WAY
EA	EACH
FC	FAIL CLOSE
FO	FAIL OPEN
FLXC	FLEXIBLE CONNECTION
FM	FLOW METER
FS	FLOW SWITCH
FT	FOOT
FUT	FUTURE
FIN GR	FINISHED GRADE
FE	FLANGED END
FNPT	FEMALE NATIONAL PIPE THREAD
GA	GAUGE
GAC	GRANULAR ACTIVATED CARBON
GALV	GALVANIZED
GI	GALVANIZED IRON
GPM	GALLONS PER MINUTE
GR	GRADE
GND	GROUND
GSKT	GASKET
GW	GROUNDWATER
GV	GATE VALVE
HDPE	HIGH DENSITY POLYETHYLENE
HORIZ	HORIZONTAL
HP	HORSEPOWER/HIGH PRESSURE
HR	HOUR
HS	HOSE
HYD	HYDRANT
HOA	HAND OFF AUTOMATIC
ID	INSIDE DIAMETER
IN	INCHES
INV	INVERT
IPS	IRON PIPE SIZE
JT	JOINT
JB	JUNCTION BOX
KO	KNOCK OUT
LSH	LEVEL SWITCH HIGH
M	MOTOR
MAX	MAXIMUM
MH	MANHOLE
MJ	MECHANICAL JOINT
MIN	MINUTE/MINIMUM
MISC	MISCELLANEOUS
MNPT	MALE NATIONAL PIPE THREAD
MP	METER PUMP
MON.PORT	MONITORING PORT
MW	MONITORING WELL
NC	NORMALLY CLOSED
NIC	NOT IN CONTRACT
NO	NORMALLY OPEN
NO.	NUMBER
N	NEW
NTS	NOT TO SCALE
OC	ON CENTER
OD	OUTSIDE DIAMETER
OSHA	OCCUPATIONAL SAFETY AND HEALTH ADMINISTRATION
OVHD	OVERHEAD
#/LB	POUND
PB	PULL BOX
PBF	PROVIDED BY FARALLON
PC	PORTLAND CEMENT
PCC	PORTLAND CEMENT CONCRETE
PG	PRESSURE GAS
PL	PROPERTY LINE/PIPE LINE
PO	PUMP OUT
P	PRESSURE
PRV	PRESSURE RELEASE VALVE
PSI	POUNDS PER SQUARE INCH
PSIA	POUNDS PER SQUARE INCH, ABSOLUTE
PSIG	POUNDS PER SQUARE INCH, GAUGE
PT	PRESSURE TRANSDUCER
PTW	PRESSURE TREATMENT
PVC	POLYVINYL CHLORIDE
PV	PROCESS VARIABLE
PR	PAIR
PUE	PUBLIC UTILITY EASEMENT
R	RADIUS/RISER
RC	REINFORCED CONCRETE
REQ	REQUIRED
REF	REFERENCE
SCH	SCHEDULE
SDR	STANDARD DIMENSION RATIO
SECT	SECTION
SHT	SHEET
SPEC	SPECIFICATION
SQ	SQUARE
STA	STATION
STD	STANDARD
STL	STEEL
SBO	SUPPLIED BY OWNER
ST	SAMPLE TAP
STR	STRAINER
SS	STAINLESS STEEL
STL	STEEL
SVE	SOIL VAPOR EXTRACTION
TYP	TYPICAL
TOC	TOP OF CASING/CURB
TOS	TOP OF STEEL
TOW	TOP OF WALL
UBC	UNIFORM BUILDING CODE
UGPS	UNDERGROUND PULL SECTION
UTIL	UTILITY
V	VALVE/VENT/VOLTS
VAC	VACUUM GUAGE
VAR	VARIES/VARIABLE
VERT	VERTICAL
VP	VAPOR
VRV	VACUUM RELIEF VALVE
W/	WITH
W/O	WITHOUT
WS	WATER SURFACE/WATER STOP

INSTRUMENTATION ABBREVIATIONS AND SYMBOLS

INSTRUMENT LEGEND

FIRST LETTER INITIATING VARIABLE		SUCCEEDING LETTERS OUTPUT FUNCTIONS
A	ANALYSIS	ALARM
B	BURNER	
C	CONDUCTIVITY	CONTROL
D	DENSITY	DIFFERENTIAL
E	POTENTIAL (VOLTS)	PRIMARY ELEMENT
F	FLOW RATE	RATIO (FRACTION)
G	FIRE ALARM	GLASS (SIGHT GAUGE)
H	HAND (MANUALLY)	HIGH
I	CURRENT (AMPERES)	INDICATE
J	POWER	
K	TIME	
L	LEVEL	LEAK, LOW
M	MOISTURE/HUMIDITY	LIGHT (PILOT)
N	EQUIPMENT STATUS	
P	PRESSURE/VACUUM	POINT (TEST CONNECTION)
Q	QUANTITY	INTEGRATE (TOTALIZE)
R		RECORD/PRINT
S	SPEED	SWITCH
T	TEMPERATURE	TRANSMIT
U	MULTIVARIABLE	MULTIFUNCTION
V	VIBRATION/VOLUME	VALVE/DAMPER
W	WEIGHT/FORCE/TORQUE	
X	UNCLASSIFIED	UNCLASSIFIED
Y		RELAY/COMPUTE
Z	POSITION	DRIVE/ACTUATE

INSTRUMENT SYMBOLS

SYMBOL	DESCRIPTION
M	MOTOR
HOA	HAND-OFF-AUTO SELECTOR SWITCH
	LOCALLY MOUNTED INSTRUMENT
	CONTROL PANEL MOUNTED INSTRUMENT
I	INTERLOCK
-10	PLC SHUTDOWN ALARM

PIPE CODES

6"Ø - PVC - GW

- PIPE DIAMETER, INCHES
- SERVICE
- PIPE MATERIAL

LINE TYPES & SYMBOLS

- MW-4 — SHALLOW ZONE SVE WELL
- MW-8 — INTERMEDIATE ZONE SVE WELL
- MW-7 — DEEP ZONE GROUNDWATER MONITORING WELL
- DRY CLEANING MACHINE
- 165-GALLON ABOVE-GROUND STORAGE TANK
- CONDENSATE PIPE
- SOIL VAPOR EXTRACTION LINE
- TRENCHING LAYOUT
- PROPERTY BOUNDARY
- D — D — FLOOR DRAIN
- S — SANITARY SEWER MAIN
- SS — SS — SIDE SEWER

STANDARD SYMBOLS

SECTION — DETAIL NUMBER — CURRENT SHEET NO. — REFERENCED SHEET NO.

PIPING, ELECTRICAL AND EQUIPMENT SYMBOLS

- GATE VALVE
- GLOBE VALVE
- BALL VALVE
- BUTTERFLY VALVE
- CHECK VALVE
- DIAPHRAM OPERATED VALVE
- S — SOLENOID VALVE
- M — MOTOR OPERATED VALVE
- PRESSURE REGULATING VALVE
- D — DRAIN
- WELD CAP
- SCREWED CAP
- SCREWED PLUG
- FLANGE
- BLIND FLANGE
- REDUCER/INCREASER
- DIRECTION OF FLOW
- UNION
- FLEXIBLE PIPE COUPLING
- BLOWER OR FAN
- CENTRIFUGAL PUMP
- PITOT TUBE
- STRAINER
- TRAP
- AF — FILTER
- Ø — DIAMETER
- FEMALE ADAPTER
- S — SILENCER
- NEEDLE VALVE
- FLOW METER
- HOSE BIB
- SAMPLE TAP/MONITORING PORT
- HEAT EXCHANGER
- PRESSURE RELIEF OR AIR RELIEF
- VACUUM RELIEF
- NO — NORMALLY OPEN
- NC — NORMALLY CLOSED
- MAGNETIC STARTER
- DUPLEX RECEPTICAL, 15A; WP-WEATHER PROOF
- ETM — ELAPSED TIME METER
- FUSE
- FUSED DISCONNECT
- CAMLOCK CONNECTION
- VERTICAL PIPERUN
- GROUND
- GROUND ROD (3/4" COPPER WELD)
- HEATER STRIP
- J — JUNCTION BOX, PB-PULLBOX
- KWH — KILOWATT HOUR METER
- M — MOTOR
- MOTOR OVERLOAD
- NON-FUSABLE DISCONNECT SWITCH
- PILOT LIGHT, R=RED, W=WHITE, G=GREEN
- SELECTOR SWITCH AO=AUTO OFF, HOA=HAND OFF AUTO
- S2 — SWITCH, 120-277V, 2-2POLE, 20A
- T — THERMOSTAT
- TD — TIME DELAY RELAY, CR=CONTROL RELAY
- TRANSFORMER
- UNDERGROUND PULLBOX
- W.P. — WEATHER PROTECTED
- 120/208V PANEL
- 277/480V PANEL
- *HIGH LIGHT STANDARD
- X — REVISION TO PLANS

GENERAL NOTES

TERRY W. MONTOYA — STATE OF WASHINGTON — 37827 — REGISTERED PROFESSIONAL ENGINEER — 8/15/07

EXPIRES: 06-22-2008

	8/15/07	AS-BUILTS	TM/DEW	TM	RM
	11/02/06	ISSUED FOR CONSTRUCTION	TM/DEW	RC/TM	RM
	DATE	DESCRIPTION	BY	CKD.	APP.

PREPARED BY

FARALLON CONSULTING
975 5th Avenue Northwest
Issaquah, WA 98027

PREPARED FOR

MR. WILBUR ALLISON
C/O MR. DAVID D. CULLEN
WEST HILLS OFFICE PARK, BUILDING 11
1800 COOPER POINT ROAD SOUTHWEST
OLYMPIA, WASHINGTON

ALLISON'S NORGE VILLAGE
SOIL VAPOR EXTRACTION SYSTEM
OLYMPIA, WASHINGTON

GENERAL NOTES, LEGEND, SYMBOLS, AND ABBREVIATIONS

SCALE	AS SHOWN
PROJECT NO.	663-010
FILE NAME	AS-BUILT
SHEET NO.	2
OF	6

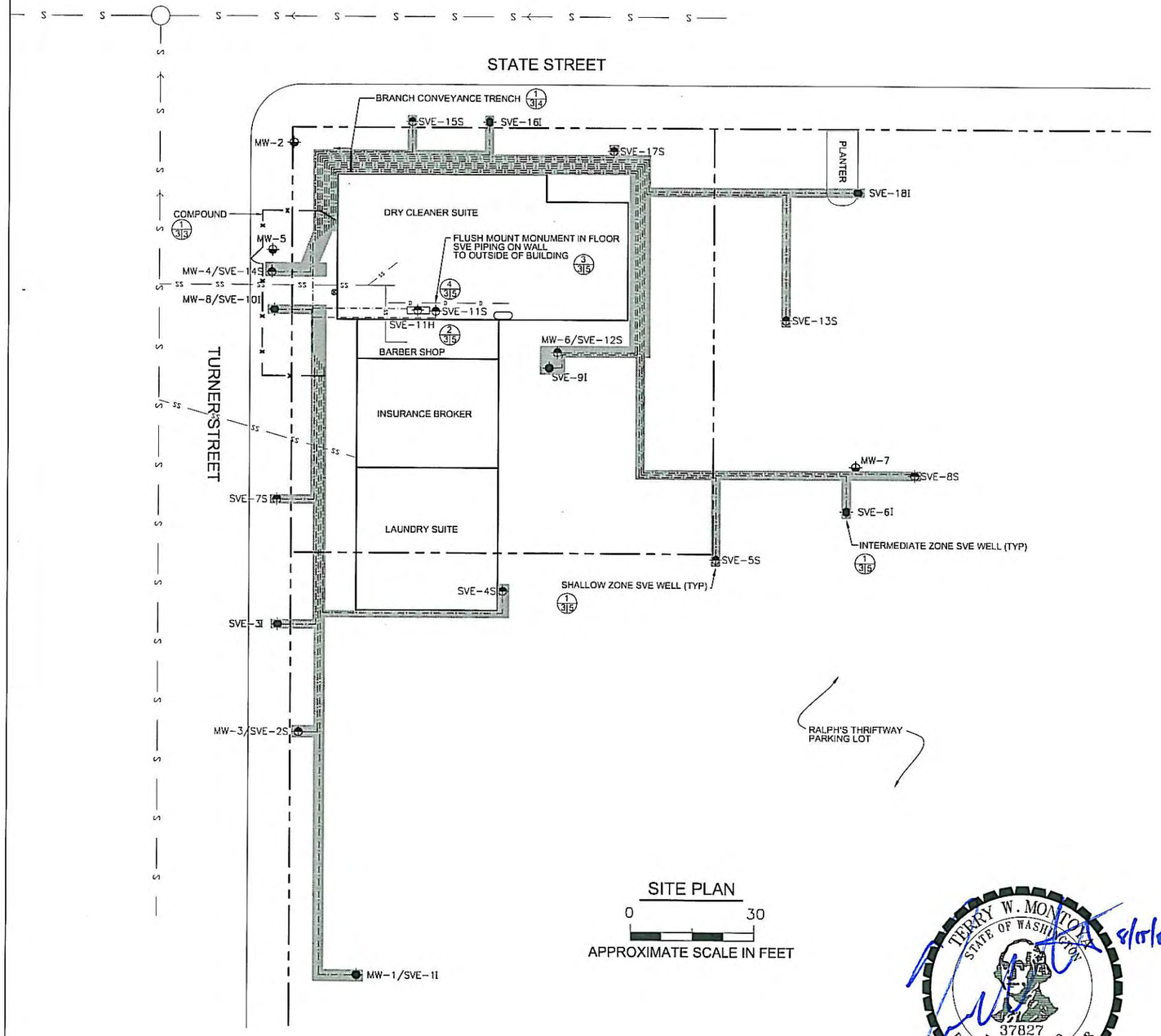

SITE PLAN

0 30

APPROXIMATE SCALE IN FEET

TERRY W. MONTON
STATE OF WASHINGTON
37827
REGISTERED
PROFESSIONAL ENGINEER

8/15/07

EXPIRES: 06-22-2008

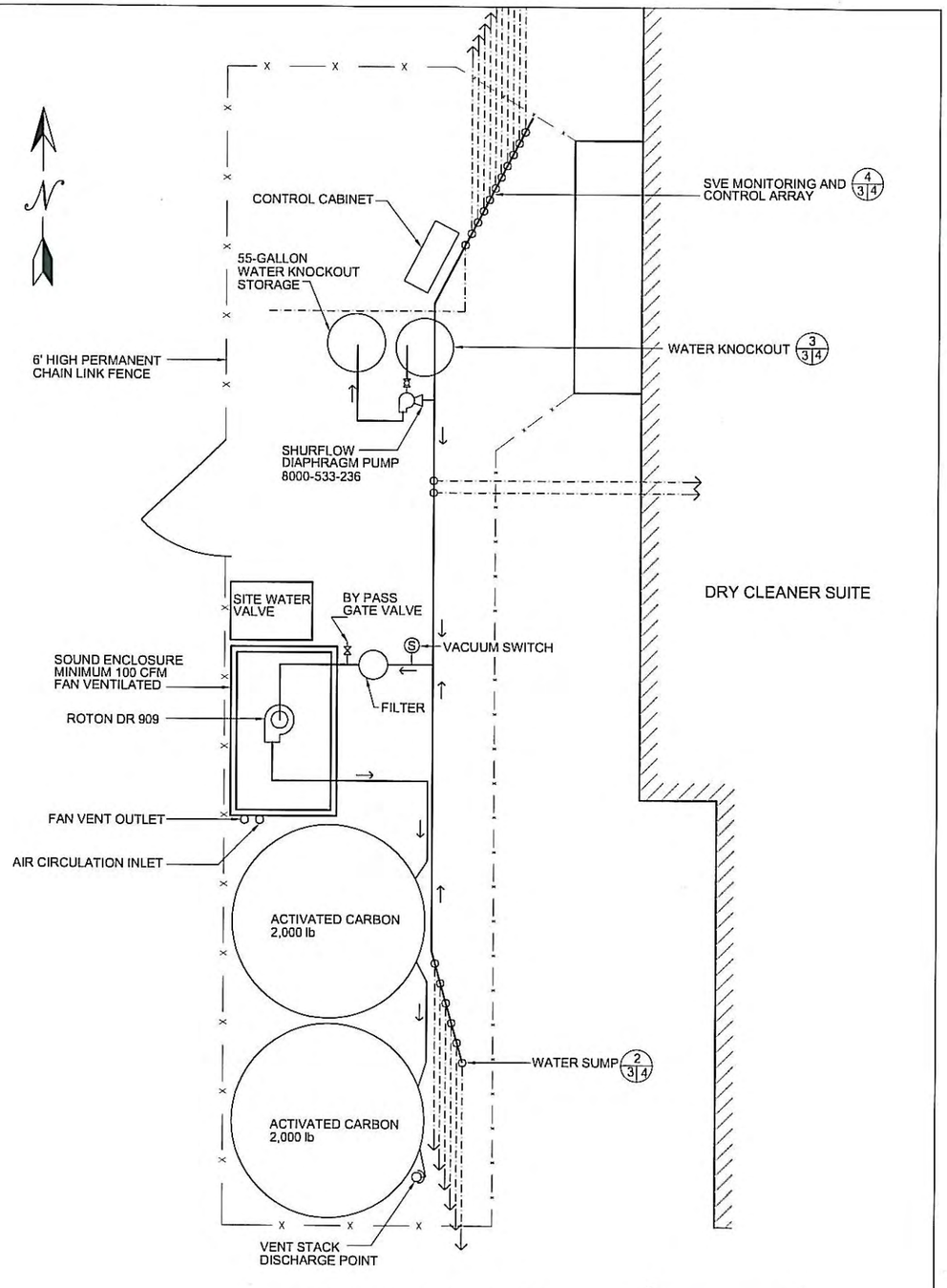

1/3|3 COMPOUND DETAIL

0 5

APPROXIMATE SCALE IN FEET

	8/15/07	AS-BUILTS	TM/DEW	TM	RM
	11/02/06	ISSUED FOR CONSTRUCTION	TM/DEW	RC/TM	RM
	DATE	DESCRIPTION	BY	CKD.	APP.

PREPARED BY

FARALLON CONSULTING
975 5th Avenue Northwest
Issaquah, WA 98027

PREPARED FOR

MR. WILBUR ALLISON
C/O MR. DAVID D. CULLEN
WEST HILLS OFFICE PARK, BUILDING 11
1800 COOPER POINT ROAD SOUTHWEST
OLYMPIA, WASHINGTON

ALLISON'S NORGE VILLAGE
SOIL VAPOR EXTRACTION SYSTEM
OLYMPIA, WASHINGTON

SITE PLAN WITH SVE SYSTEM AND COMPOUND DETAIL

SCALE	AS SHOWN
PROJECT NO.	663-010
FILE NAME	AS-BUILT
SHEET NO.	3
OF	6

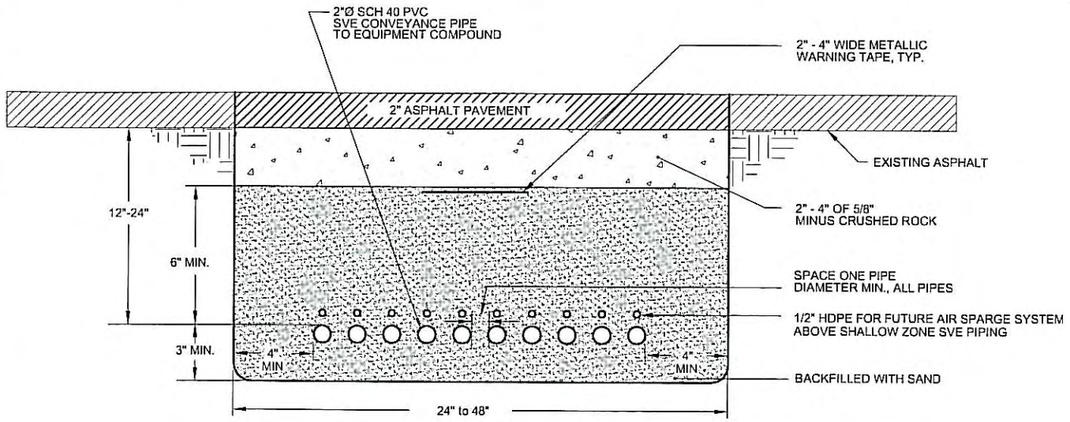

1 / 4 | 3 BRANCH CONVEYANCE TRENCH
NOT TO SCALE

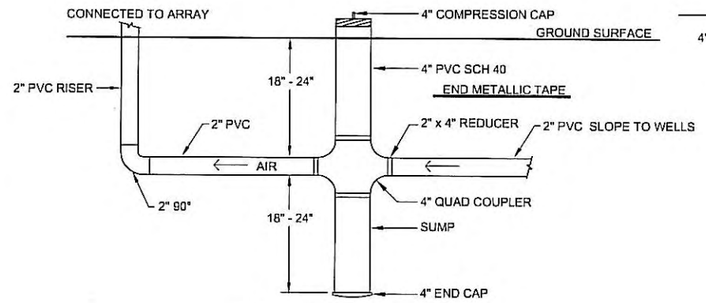

2 / 4 | 3 WATER SUMP
NOT TO SCALE

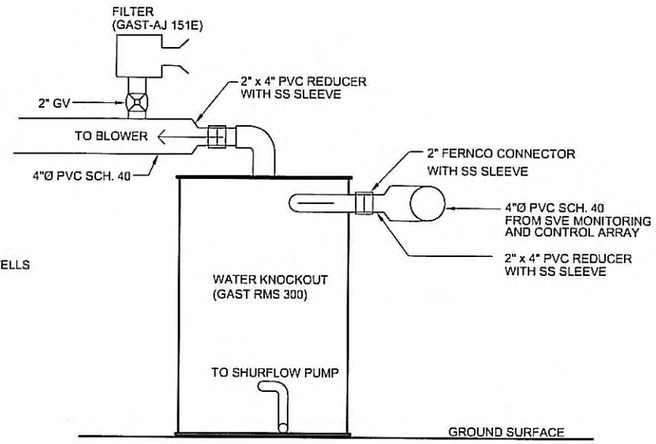

3 / 4 | 3 WATER KNOCKOUT DETAIL
NOT TO SCALE

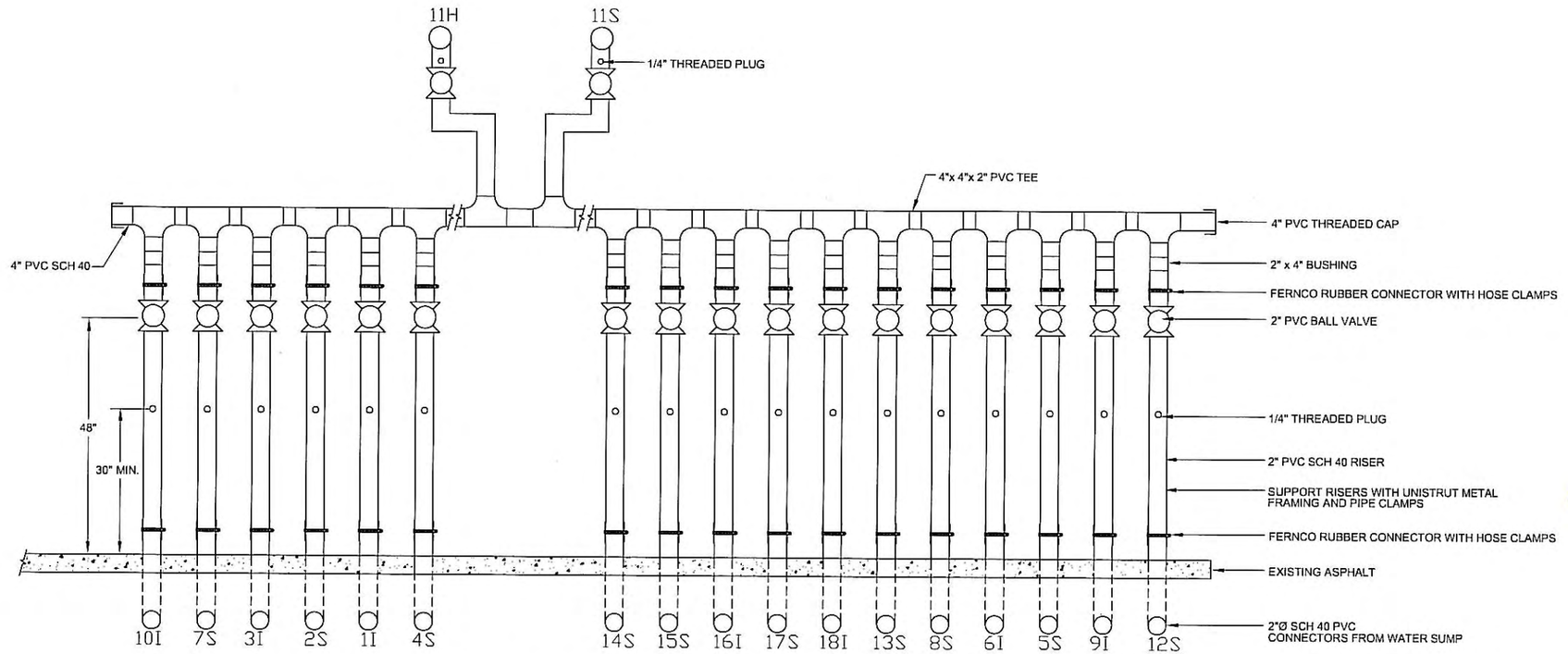

4 / 4 | 3 SVE MONITORING & CONTROL ARRAY
NOT TO SCALE

TERRY W. MONTOYA
STATE OF WASHINGTON
37827
REGISTERED
PROFESSIONAL ENGINEER
8/15/07

EXPIRES: 06-22-2008

	8/15/07	AS-BUILTS	TM/DEW	TM	RM
	11/02/06	ISSUED FOR CONSTRUCTION	TM/DEW	RC/TM	RM
	DATE	DESCRIPTION	BY	CKD.	APP.

PREPARED BY
FARALLON CONSULTING
975 5th Avenue Northwest
Issaquah, WA 98027

PREPARED FOR
MR. WILBUR ALLISON
C/O MR. DAVID D. CULLEN
WEST HILLS OFFICE PARK, BUILDING 11
1800 COOPER POINT ROAD SOUTHWEST
OLYMPIA, WASHINGTON

ALLISON'S NORGE VILLAGE
SOIL VAPOR EXTRACTION SYSTEM
OLYMPIA, WASHINGTON

DETAILS

SCALE: AS SHOWN
PROJECT NO.: 663010
FILE NAME: AS-BUILT
SHEET NO.: 4 OF: 6

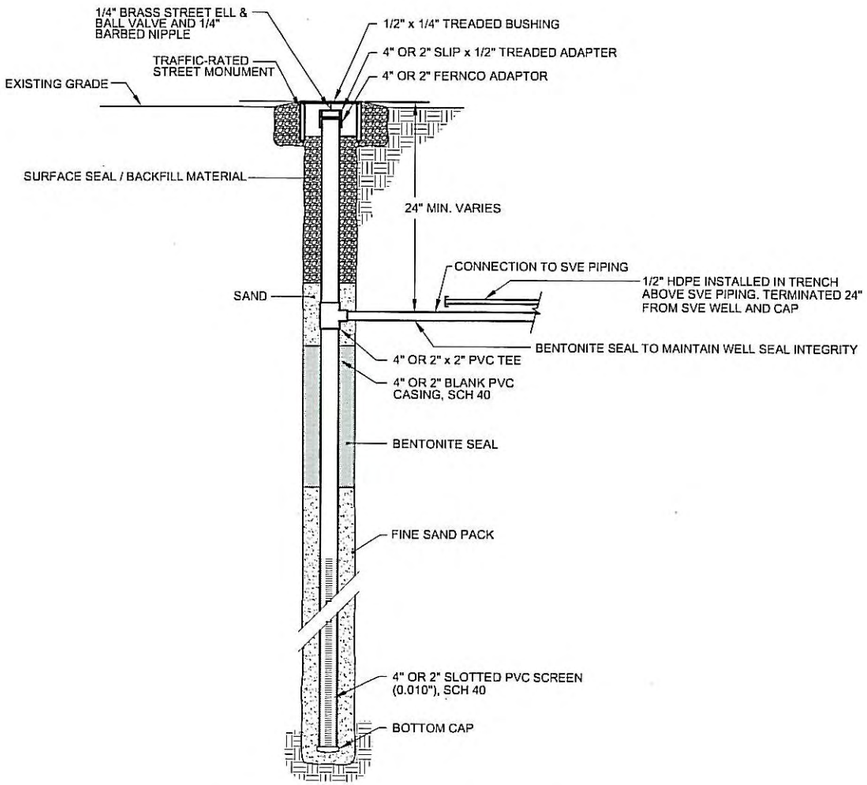

1 / 5 3 SVE WELL CONSTRUCTION DETAIL
NOT TO SCALE

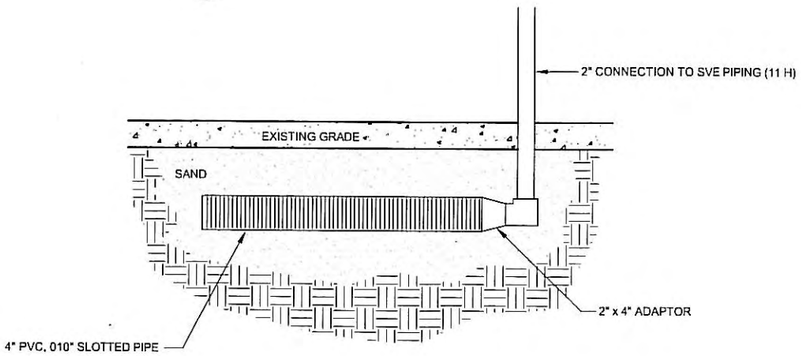

2 / 5 3 SVE WELL 11 H CONSTRUCTION DETAIL
NOT TO SCALE



EXPIRES: 06-22-2008

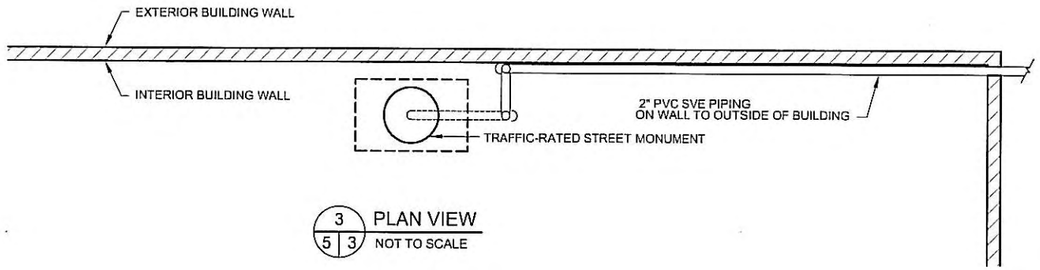

3 / 5 3 PLAN VIEW
NOT TO SCALE

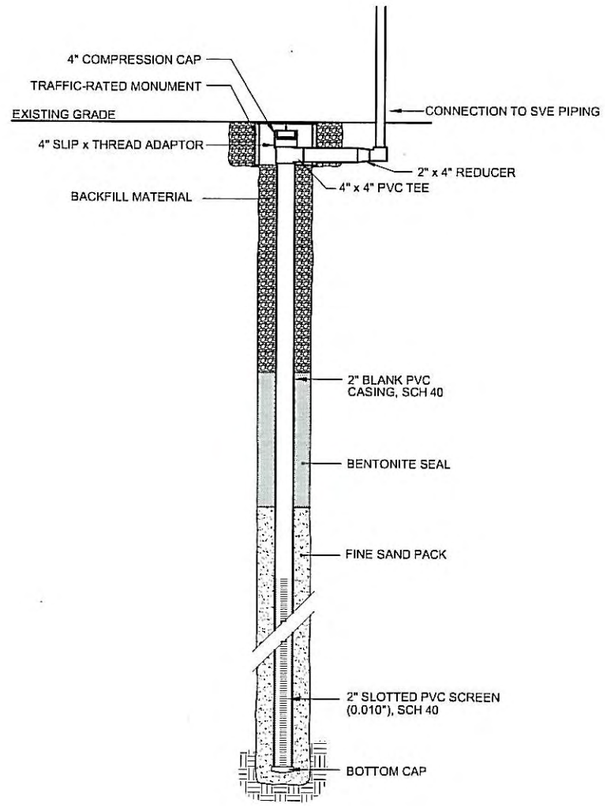

PROFILE VIEW
NOT TO SCALE

4 / 5 3 WELL SVE-11S DETAIL
NOT TO SCALE

	8/15/07	AS-BUILTS	TM/DEW	TM	RM
	11/02/06	ISSUED FOR CONSTRUCTION	TM/DEW	RC/TM	RM
	DATE	DESCRIPTION	BY	CKD.	APP.

PREPARED BY
FARALLON CONSULTING
975 5th Avenue Northwest
Issaquah, WA 98027

PREPARED FOR
MR. WILBUR ALLISON
C/O MR. DAVID D. CULLEN
WEST HILLS OFFICE PARK, BUILDING 11
1800 COOPER POINT ROAD SOUTHWEST
OLYMPIA, WASHINGTON

ALLISON'S NORGE VILLAGE
SOIL VAPOR EXTRACTION SYSTEM
OLYMPIA, WASHINGTON

DETAILS

SCALE: AS SHOWN
PROJECT NO.: 663010
FILE NAME: AS-BUILT
SHEET NO.: 5 OF: 6

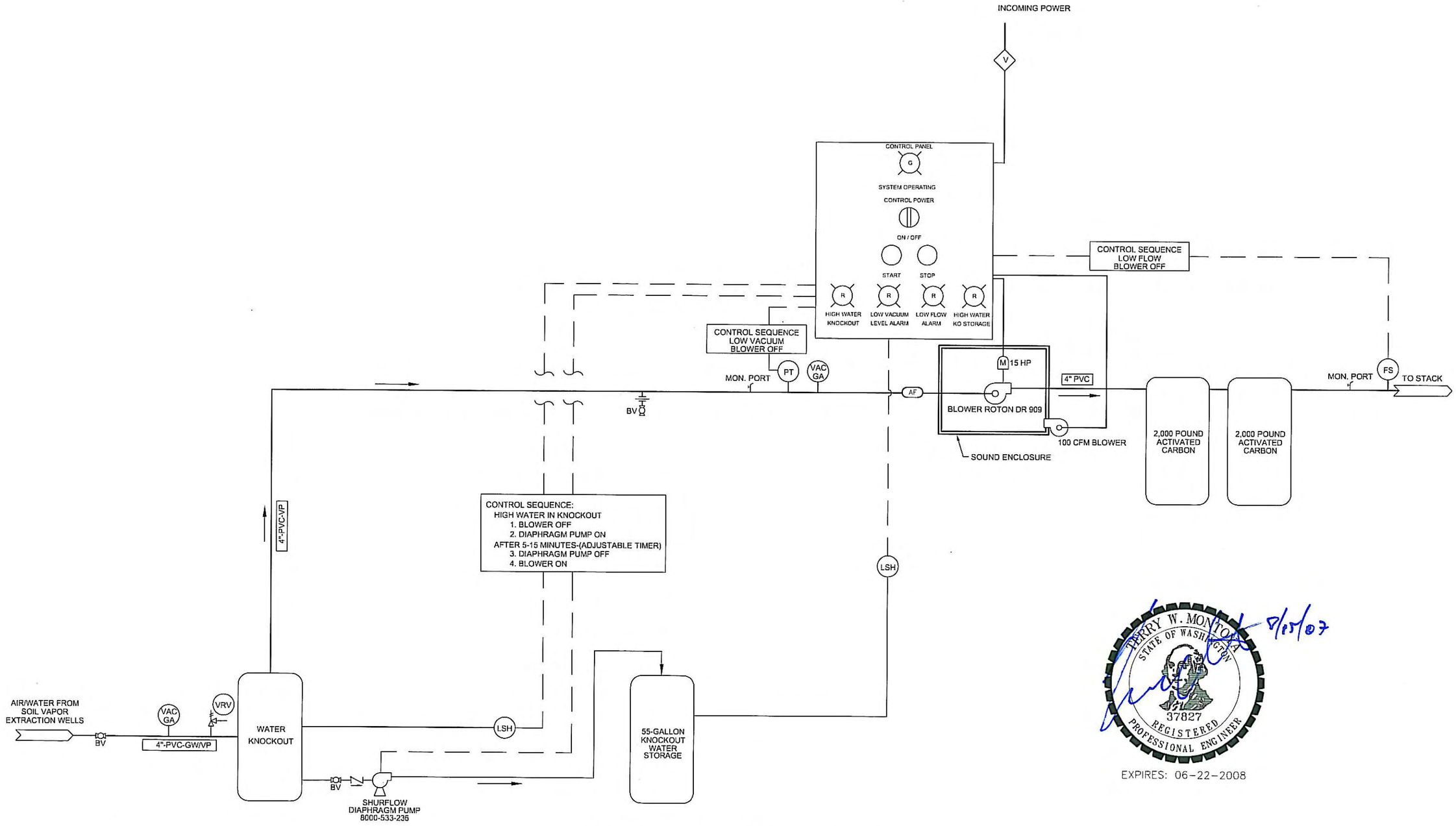

PROCESS AND INSTRUMENTATION DIAGRAM

NOT TO SCALE

TERRY W. MONTOUR
STATE OF WASHINGTON
37827
REGISTERED
PROFESSIONAL ENGINEER
8/15/07

EXPIRES: 06-22-2008

	6/11/07	AS-BUILTS	TM/DEW	TM	RM
	11/02/06	ISSUED FOR CONSTRUCTION	TM/DEW	RC/TM	RM
	DATE	DESCRIPTION	BY	CKD.	APP.

PREPARED BY

FARALLON CONSULTING
975 5th Avenue Northwest
Issaquah, WA 98027

PREPARED FOR

MR. WILBUR ALLISON
C/O MR. DAVID D. CULLEN
WEST HILLS OFFICE PARK, BUILDING 11
1800 COOPER POINT ROAD SOUTHWEST
OLYMPIA, WASHINGTON

ALLISON'S NORGE VILLAGE
SOIL VAPOR EXTRACTION SYSTEM
OLYMPIA, WASHINGTON

PROCESS AND INSTRUMENTATION DIAGRAM

SCALE	AS SHOWN
PROJECT NO.	663010
FILE NAME	AS-BUILT
SHEET NO.	6
OF	6

APPENDIX E
SVE SYSTEM OPERATIONS AND MAINTENANCE MANUAL

CLEANUP ACTION PROGRESS REPORT
AUGUST 2006 TO AUGUST 2007
Allison's Norge Village (AKA Eastside Laundry)
120 Northeast Turner Street
Olympia, Washington
VCP # SW 0370

Farallon PN: 663-010

FARALLON consulting

975 5th Avenue Northwest, Issaquah, Washington 98027
Tel: (425) 295-0800 Fax: (425) 295-0850
www.farallonconsulting.com

Operations and Maintenance Manual
SOIL VAPOR EXTRACTION SYSTEM

ALLISON'S NORGE VILLAGE
120 NORTHEAST TURNER STREET
OLYMPIA, WASHINGTON

Submitted by:
Farallon Consulting, L.L.C.
975 5th Avenue Northwest
Issaquah, Washington 98027
Farallon PN: 663-010

For:
Mr. Wilbur Allison dba Allison's Norge Village Dry Cleaners
c/o Mr. David D. Cullen
West Hills Office Park
Building 11, 1800 Cooper Point Road Southwest
Olympia, Washington 98502

April 3, 2007

Prepared by:

Carla E. Brock, L.G.
Associate Geologist

Reviewed by:

Perry Montoya, P.E.
Senior Project Engineer

TABLE OF CONTENTS

1.0 INTRODUCTION 1-1

2.0 PROJECT CONTACT INFORMATION 2-1

3.0 SYSTEM DESCRIPTION 3-1
3.1 REMEDIATION SYSTEM CONSTRUCTION 3-1
3.1.1 Equipment 3-1
3.1.2 Water Knockout 3-2
3.1.3 Electrical 3-2
3.1.4 Granulated Activated Carbon 3-2

4.0 STARTUP AND SHUTDOWN PROCEDURES 4-1
4.1 STARTUP PROCEDURE 4-1
4.2 SHUTDOWN PROCEDURES 4-1

5.0 TROUBLESHOOTING PROCEDURES 5-1
5.1 Low Vacuum Level Alarm Shutdown 5-1
5.2 High Water Knockokut Shutdown 5-1
5.3 Low Flow Alarm 5-2
5.4 High Water KO Storage Alarm 5-2
5.5 Motor Overload Shutdown 5-3

6.0 ROUTINE MONITORING PROCEDURES 6-1
6.1 SVE SYSTEM EMISSIONS MONITORING 6-1
6.2 SVE SYSTEM OPERATING PARAMETERS 6-2

7.0 ROUTINE MAINTENANCE 7-1

8.0 SITE SAFETY 8-1

APPENDICES

Appendix A Soil Vapor Extraction System As-Builts

Appendix B Equipment Specifications

Appendix C SVE Flow Conversion Charts

Appendix D ORCAA Order of Approval, Notice of Construction

Appendix E Field Forms

Appendix F Site-Specific Health and Safety Plan

1.0 INTRODUCTION

This operation and maintenance (O&M) manual has been prepared for the soil vapor extraction (SVE) remediation system at Allison's Norge Village located at 120 Northeast Turner Street, in Olympia, Washington (herein referred to as the Site). The SVE system has been constructed to remediate concentrations of tetrachloroethene (PCE) in soil and groundwater at the Site. A concrete pad lined with cyclone fencing on the west side of the building houses the mechanical equipment and controls for operating the SVE system.

The cleanup is being conducted under the Washington State Department of Ecology (Ecology) Voluntary Cleanup Program in accordance with the Model Toxics Control Act Cleanup Regulation (MTCA), Chapter 173-340 of the Washington Administrative Code. The selected cleanup at the Site was designed by Farallon Consulting, L.L.C. for Mr. Wilbur Allison dba Allison's Norge Village Dry Cleaners and described in detail in the *Draft Cleanup Action Plan*, dated December 14, 2005.

The purpose of this O&M manual is to describe normal operating procedures for the SVE system, and to assist in troubleshooting problems that may arise during typical operation. This O&M manual presents the operation, as-builts, material components, inspection, safety protocols and maintenance of the SVE system.

2.0 PROJECT CONTACT INFORMATION

The contacts for this project are listed below:

Project Contacts:

Carla Brock, L.G., Project Manager
Farallon Consulting, L.L.C.
(425) 295-0806
Email: cbrock@farallonconsulting.com

J. Riley Conkin, L.G., Principal Geologist
Farallon Consulting, L.L.C.
Phone: (425) 295-0804
Email: rconkin@farallonconsulting.com

Technical Contacts:

Richard McManus, P.E., Principal Engineer
Farallon Consulting, L.L.C.
Email: rmcmanus@farallonconsulting.com

Terry Montoya, P.E., Senior Engineer
Farallon Consulting, L.L.C.
Email: tmontoya@farallonconsulting.com

Forest Reider, Staff Geologist
Farallon Consulting, L.L.C.
Email: freider@farallonconsulting.com

Client Contact:

Mr. David D. Cullen
West Hills Office Park
1800 Cooper Point Road Southwest, Building 11
Olympia, Washington 98502
Phone: (360) 786-6500

Property Contact:

Mr. Kevin Stormans
Stormans, Inc.
1932 East 4th Avenue
Olympia, Washington 98506
Phone: (360) 754-2203

3.0 SYSTEM DESCRIPTION

The SVE system consists of 18 SVE wells located outside the building, including 11 SVE wells constructed in the Shallow Zone and 7 SVE wells constructed in the Intermediate Zone, and 2 SVE wells beneath the concrete slab inside the building. The SVE wells are connected via 2-inch underground piping to a vacuum blower located in the remediation compound. The SVE well locations, and SVE system underground piping locations are shown on the SVE System As-Builts, which are included as Appendix A.

The following system components are located within the remediation compound:

- The SVE system blower;
- A water knockout drum to collect water that is drawn into the SVE system;
- An array of flow meters and gate valves to control the vacuum to the SVE wells; and
- Two granulated activated carbon (GAC) filter canisters.

Appendix B of this document includes the specifications of the SVE system blower (Rotron DR-909).

The SVE System As-Built Drawings are attached as Appendix A and include the following:

- Sheet 1 – Title Sheet, Site Location map, and Drawing Index
- Sheet 2 – General Notes, Legend, Symbols, and Abbreviations
- Sheet 3 – Site Plan with SVE System and Compound Detail
- Sheet 4 – Details
- Sheet 5 – Details
- Sheet 6 – Process and Instrumentation Diagram

The construction of the SVE system is described in the following sections and includes a summary of the mechanical equipment, the water knockout, the electrical components and the GAC canisters and monitoring points.

3.1 REMEDIATION SYSTEM CONSTRUCTION

3.1.1 Equipment

The SVE system is installed on the concrete pad on the west side of the building. The equipment specifications are provided in Appendix B. The following components comprise the system:

1. SVE System Blower

   - Rotron Model Number DR-909
   - 20 horsepower, 230 volt, three phase motor at 60 Hz

- 120 inch H_20 Max. Pressure, 85 inch H_20 vacuum, 620 cfm open flow at 60 Hz
- Full Load Amps of 54

2. Water Knockout System

   - Gast RMS 200
   - 55-gallon Storage Tank

3. Granulated Activated Carbon Canisters

   - 3,000-pound

3.1.2 Water Knockout

Incoming SVE air passes through an elevated water knockout tank. The 55-gallon knockout tank traps free moisture that accumulates within the tank. A high-level shut-off within the tank is interlocked with the SVE system blower to temporarily shut off system operation when the tank is full. With the SVE blower off the knock out transfer pump, pumps the water to a 55-gallon storage tank. After 5-10 minutes the knockout transfer pump stops and the SVE blower re-starts. Coupled with the 55-gallon storage tank high-level shut off switch is a low-vacuum switch that shuts the system down if a certain loss of vacuum occurs to the SVE system.

3.1.3 Electrical

The remediation compound building is powered by a **three-phase, 240-volt 200-amp, 60-Hz service.** The panel is equipped with ON/OFF/AUTO motor controls, motor overload protection, and high liquid level and low vacuum warning lights. In addition the 20 hp SVE blower has an electrical soft start motor controller to minimize the power draw during the motor startup.

3.1.4 Granulated Activated Carbon

The SVE system emissions are treated by filtering through the GAC canisters prior to discharge to the atmosphere. Two 3,000-pound GAC canisters are located between the SVE system blower and the discharge stack. The GAC canisters are filled with activated carbon. Monitoring ports located upstream of the GAC canisters, in between the two GAC canisters and downstream of the second GAC canister are used to monitor concentrations of PCE.

4.0 STARTUP AND SHUTDOWN PROCEDURES

This section describes standard SVE system startup and shutdown procedures.

WARNING: VOLTAGE. Contact with live wires or electric components can lead to serious injury or death. Motor control and electric service panels should be opened ONLY by electricians or other personnel with the specific training and knowledge to service this equipment safely.

4.1 STARTUP PROCEDURE

The following procedure applies to start-up of the remediation system:

1. **Power ON** – Check main breaker to confirm power to Motor Control Panel is ON.

2. **Check Warning Lights** – The "High Water Knockout", "Low Vacuum Level Alarm", "Low Flow Alarm" and the "High Water KO Storage" warning lights should be OFF. If the lights are on, follow the Troubleshooting Procedures provided in Section 5.

3. **Turn SVE System ON** – Switch the SVE motor control switch to the AUTO position.

4. **Adjusting SVE System Vacuum** – Set the SVE system operating vacuum to the desired vacuum by adjusting the SVE system bleed valve located immediately upstream of the blower.

5. **Adjust SVE Well Airflow** – Adjust the gate valve below the flow meters to either allow more or less airflow, until the desired flow rate is obtained. Turning the valve clockwise will decrease flow, and turning the valve counterclockwise will increase the flow.

4.2 SHUTDOWN PROCEDURES

The following procedure applies to normal system shutdown.

1. **Turn OFF the SVE System** – Turn the SVE motor control switch to the OFF position.

5.0 TROUBLESHOOTING PROCEDURES

The following sections provide detailed troubleshooting procedures following automatic shutdown of the remediation system for low vacuum, high liquid levels and motor overload.

5.1 Low Vacuum Level Alarm Shutdown

A vacuum sensor on the SVE system blower inlet pipe is linked to a timer and automatic shut-off in the motor control panel for the SVE blower. A low vacuum level alarm shutdown will be activated under the following circumstances:

- If a vacuum of 16.5 to 18 IOW is not attained in approximately 30 seconds after turning the SVE system blower motor control to AUTO, the SVE system blower will automatically shut off, and the low vacuum warning light will illuminate.
- If the SVE system operating vacuum at the inlet to the SVE blower falls below 16.5 to 18 IOW, the SVE system blower will automatically shut off, and the "Low Vacuum" warning light will illuminate.

Following a low vacuum shutdown, a manual restart is required, using the following reset procedures:

1. Check all inlet and outlet piping to the SVE blower for damage. A blockage in the outlet or breakage in the inlet piping can lead to a low vacuum shutdown.

2. Turn the SVE system blower control switch on the motor control panel to the OFF position.

3. Press the "RESET" button on the motor control panel.

4. The "Low Vacuum" warning light should be off. If it remains illuminated, repeat steps 1 and 2.

5. Start the SVE system using the standard SVE system startup procedure described in Section 4. If problems continue, the low vacuum shut-off limit can be adjusted with a screwdriver by turning the adjustment spring in the small control box that is located just upstream of the knockout tank on the incoming PVC pipe.

5.2 High Water Knockokut Shutdown

A high-water float switch is located in the knockout tank to prevent overfilling. When the water level in the knockout tank reaches approximately two-thirds full, the float switch will cause the SVE system blower to temporarily shut down. The "High Water Knockout" warning light will illuminate. The system should start back up in 5 to 10 minutes after the knockout pump has transferred the water to the storage tank.

5.3 Low Flow Alarm

A low flow sail switch is located at the end of outlet pipe from the second activated carbon canister to ensure at least 50 scfm is flowing through the system when the SVE blower is running. In the event of a blockage on the inlet side of the SVE blower, or piping failure on the outlet side of the SVE blower, the sail switch will break contact and the system will be shut down.

Following a low vacuum shutdown, a manual restart is required, using the following reset procedures:

1. Check all inlet and outlet piping to the SVE blower for damage. A blockage in the inlet or breakage in the outlet piping can lead to a low flow shutdown.

2. Turn the SVE system blower control switch on the motor control panel to the OFF position.

3. Press the "RESET" button on the motor control panel.

4. The "Low Flow Alarm" warning light should be off. If it remains illuminated, repeat steps 2 and 3.

5. Start the SVE system using the standard SVE system startup procedure described in Section 4. If problems continue, the low flow alarm sail switch can be adjusted with a screwdriver by turning the adjustment spring in the small control box that is located just down stream of the second activated carbon canister.

5.4 High Water KO Storage Alarm

A high-water float switch is located in the storage tank to prevent overfilling. When the water level in the storage tank reaches approximately seven-eighths full, the float switch will cause the SVE system blower to shut down. The "High Water KO Alarm" warning light will illuminate. The water from the 55-gallon storage tank will need to be transferred into a 55-gallon DOT approved drum for temporary storage inside of the treatment system compound. A hazardous waste transporter will need to be notified in order to have the drum removed from the site.

Following a high liquid shutdown, a manual restart is required, using the following procedures:

1. Turn the SVE system blower control switch on the motor control panel to the OFF position.

2. Press the RESET button on the motor control panel.

3. The "High Liquid" warning light should be off. If the light remains illuminated, repeat steps 1 through 3.

4. Start the SVE system using the standard startup procedure described in Section 4.

5.5 Motor Overload Shutdown

Motor overload is defined as drawing more amperage to sustain the motor's set parameters than the motor is designed for. A motor overload switch senses this excessive amperage draw, and shuts the motor down prior to it overheating and potential damage to the motor. Motor overload will result in automatic full or partial system shutdown. Motor overload will occur in the following circumstances:

- **SVE System Blower** – The SVE system blower motor will overload if the vacuum exceeds approximately 100 IOW for extended periods of time.
- **Excessive Operating Temperatures** – The motors may shut down at lower operating loads when exposed to high operating temperature environments.

If motor overload occurs, allow the motors to cool until they are cool to the touch and restart the system using the following procedures:

1. Turn the SVE system blower control switch on the motor control panel to the OFF position.
2. Press the "RESET" button on the motor control panel.
3. Start the SVE system using the standard system startup procedure described in Section 4.
4. Check SVE motor operating amps.

There are motor overload setting controls in the motor instrument panel that can be adjusted. These setting controls should be adjusted only by qualified personnel only.

6.0 ROUTINE MONITORING PROCEDURES

This section presents the routine monitoring procedures for the SVE system, including emissions monitoring and operating parameters.

6.1 SVE SYSTEM EMISSIONS MONITORING

The SVE system is operated under an Order of Approval, Notice of Construction (Order) from the Olympic Region Clean Air Agency (ORCAA), issued December 28, 2006 (NOC #: 06NOC511). A copy of the order is included as Appendix D.

Prior to start-up of the SVE system, soil vapor samples will be collected from each SVE well to establish a baseline for performance monitoring, and from the SVE system outflow to document the concentrations of PCE emitted from the SVE system. The soil vapor samples will be collected from a sampling port installed in each SVE pipe, and from the total SVE system outflow in the remediation compound using a Tedlar bag. The soil vapor samples will be submitted for laboratory analysis of PCE by U.S. Environmental Protection Agency (EPA) Method 8260B.

The Order requires that all air emissions from the SVE system be vented through two GAC canisters in series. Concentrations of PCE in air emissions from the SVE system will be monitored upstream of the first GAC canister, between the two canisters, and immediately after the second canister. The monitoring program for SVE system emissions is slightly more stringent than required by ORCAA and includes the following:

- On the first day of SVE system operation;
- Weekly for the first two weeks of SVE system operation;
- Monthly for the first three months of SVE system operation:
- Quarterly thereafter (or less frequently, with approval from ORCAA); and
- Immediately after replacement of a GAC canister.

During the first two weeks of SVE system operation, samples of the air emissions will be collected in Tedlar bags and submitted to OnSite Environmental, Inc. for laboratory analysis by EPA Method 8260B and sampled in the field using a GasTec pump and colorimetric tubes specific to PCE with a detection limit of 1.0 parts per million volume (ppmv). Soil vapor samples will be collected from each SVE well, and from the total SVE system emissions during the first two weeks of SVE system operation.

After the first two weeks of operation, samples of the SVE system emissions will be sampled in the field using a GasTec pump and PCE-specific colorimetric detection tube. The samples will be collected of the total SVE system emissions and select SVE wells. After the first 3 months of operation, soil vapor samples will be collected quarterly through the end of the first year of operation. After 1 year of operation of the SVE system, soil vapor from each SVE well will be

collected and submitted for laboratory analysis of PCE to evaluate the progress of the cleanup action by direct comparison to the baseline monitoring results.

Soil vapor sampling will continue on a regular basis throughout the duration of SVE system operation. Trends noted in the concentrations of PCE removed from the vadose zone over time will be used to evaluate the completeness of the cleanup action. The SVE system will operate continuously until the trends of PCE in soil vapor are asymptotic or non-detectable for at least four consecutive quarterly monitoring events, and rebound in the concentrations of PCE in any SVE well after a shutdown period of 3 months is less than 5 percent.

6.2 SVE SYSTEM OPERATING PARAMETERS

During Site visits, the following system operating parameters will be recorded onto the field forms shown in Appendix E of this document:

- The date of every O&M Site visit;
- The vacuum upstream of the water knockout tank, by reading the gage on the 3-inch PVC pipe;
- Flow readings from each SVE well prior to adjusting the flows;
- The volume of water in the knockout drum;
- The concentration of PCE detected at each monitoring location; and
- The flow rates from each SVE well after adjusting the flows.

7.0 ROUTINE MAINTENANCE

The following routine maintenance items will be performed monthly. In addition to the items below, unusual operating conditions will be documented on the field forms provided in Appendix E, and will be addressed on site.

Summary of Routine Maintenance

Item No.	Description	Frequency	Performed By	Remarks
1	Knockout Drum	Monthly	Service Technician	Check water level in knockout drum. Inspect drains for any plugs.
2	SVE Blower	Monthly	Service Technician	Record voltage and amperage readings in instrument panel.
3	SVE Blower Filter	Monthly	Service Technician	Inspect and clean filter as necessary.

8.0 SITE SAFETY

A Health and Safety Plan (HASP) has been developed for the Site (Appendix F), and will be maintained on the Site at all times. Any individual performing work at this Site should read and be familiar with the HASP. At a minimum, personal protective equipment, including earplugs, a hard hat, eye protection, and steel-toed boots should be worn at all times when work is performed in the remediation compound.

Directions to the nearest hospital and emergency contact numbers are included in the HASP. Workers should be familiar with the location of the nearest hospital prior to conducting field operations at this Site

APPENDIX A
SOIL VAPOR EXTRACTION SYSTEM AS-BUILTS

OPERATIONS AND MAINTENANCE MANUAL
Soil Vapor Extraction System
Allison's Norge Village
120 Northeast Turner Street
Olympia, Washington

Farallon PN: 663-010

APPENDIX B
EQUIPMENT SPECIFICATIONS

OPERATIONS AND MAINTENANCE MANUAL
Soil Vapor Extraction System
Allison's Norge Village
120 Northeast Turner Street
Olympia, Washington

Farallon PN: 663-010

SERVICE AND PARTS MANUAL FOR BLOWER MODEL

DR909RDNT, DR14RDNT, DR14RDM, DR623RD, DR823RD, DR1223RD

REMOTE DRIVE REGENERATIVE BLOWER

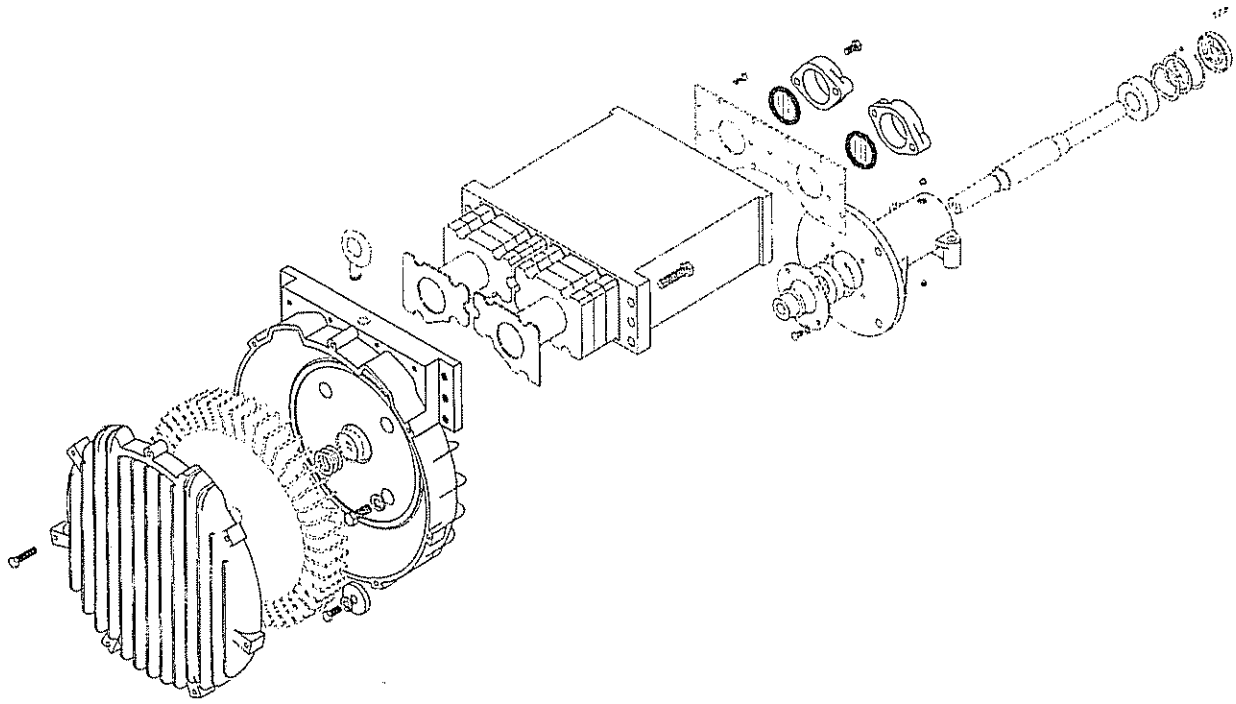

Technical & Industrial Products
627 Lake Street, Kent. Ohio 44240 U.S.A.
Telephone: 330-673-3452 Fax: 330-677-3306
e-mail: rotronindustrial@ametek.com
internet: www.ametektip.com

Your Choice. Our Commitment.™

WARRANTY, INSTALLATION, MAINTENANCE AND TROUBLESHOOTING INSTRUCTIONS

TECHNICAL AND INDUSTRIAL PRODUCTS
627 Lake Street, Kent, Ohio 44240 USA
Telephone: 330-673-3452 Fax: 330-677-3306
e-mail: rotronindustrial@ametek.com web site: www.ametektip.com

1. AMETEK Rotron DR, EN and HiE regenerative direct drive blowers are guaranteed for one full year from the date of installation (limited to 18 months from the date of shipment) to the original purchaser only. Should the blower fail we will evaluate the failure If failure is determined to be workmanship or material defect related, we will at our option repair or replace the blower.

2. AMETEK Rotron Minispiral, Revaflow, Multiflow, Nautilair, remote drive blowers, moisture separators, packaged units, CP blowers, Nasty Gas™ models and special built (EO) products are guaranteed for one full year from date of shipment for workmanship and material defect to the original purchaser only. Should the blower fail, If failure is determined to be workmanship or material defect related, we will at our option repair or replace the blower.

3. **Parts Policy** - AMETEK Rotron spare parts and accessories are guaranteed for three months from date of shipment for workmanship and material defect to the original purchaser only. If failure is determined to be workmanship or material defect related we will at our option repair or replace the part.

Corrective Action - A written report will be provided indicating reason(s) for failure, with suggestions for corrective action. Subsequent customer failures due to abuse, misuse, misapplication or repeat offense will not be covered. AMETEK Rotron will then notify you of your options. Any failed unit that is tampered with by attempting repair or diagnosis will void the warranty, unless authorized by the factory.

Terms and Conditions - Our warranty covers repairs or replacement of regenerative blowers only, and will not cover labor for installation, outbound and inbound shipping costs, accessories or other items not considered integral blower parts. Charges may be incurred on products returned for reasons other than failures covered by their appropriate warranty. Out-of-warranty product and in warranty product returned for failures determined to be caused by abuse, misuse, or repeat offense will be subject to an evaluation charge. Maximum liability will in no case exceed the value of the product purchased. Damage resulting from mishandling during shipment is not covered by this warranty. It is the responsibility of the purchaser to file claims with the carrier. Other terms and conditions of sale are stated on the back of the order acknowledgement.

Installation Instructions for SL, DR, EN, CP, and HiE Series Blowers

1. **Bolt It Down** - Any blower must be secured against movement prior to starting or testing to prevent injury or damage. The blower does not vibrate much more than a standard electric motor.

2. **Filtration** - All blowers should be filtered prior to starting. Care must be taken so that no foreign material enters the blower. If foreign material does enter the blower, it could cause internal damage or may exit at extremely high velocity.

   Should excessive amounts of material pass through the blower, it is suggested that the cover(s) and impeller(s) be removed periodically and cleaned to avoid impeller imbalance. Impeller

imbalance greatly speeds bearing wear, thus reducing blower life. Disassembling the blower will void warranty, so contact the factory for cleaning authorization.

3. **Support the Piping** - The blower flanges and nozzles are designed as connection points only and are not designed to be support members.

   Caution: Plastic piping should not be used on blowers larger than 1 HP that are operating near their maximum pressure or suction point. Blower housing and nearby piping temperatures can exceed 200°F. Access by personnel to the blower or nearby piping should be limited, guarded, or marked, to prevent danger of burns.

4. **Wiring** - Blowers must be wired and protected/fused in accordance with local and national electrical codes. All blowers must be grounded to prevent electrical shock. Slo-Blo or time delay fuses should be used to bypass the first second of start-up amperage.

5. **Pressure/Suction Maximums** - The maximum pressure and/or suction listed on the model label should not be exceeded. This can be monitored by means of a pressure or suction gage (available from Rotron), installed in the piping at the blower outlet or inlet. Also, if problems do arise, the Rotron Field representative will need to know the operating pressure/suction to properly diagnose the problem.

6. **Excess Air** - Bleed excess air off. DO NOT throttle to reduce flow. When bleeding off excess air, the blower draws less power and runs cooler.

   Note: Remote Drive (Motorless) Blowers - Properly designed and installed guards should be used on all belts, pulleys, couplings, etc. Observe maximum remote drive speed allowable. Due to the range of uses, drive guards are the responsibility of the customer or user. Belts should be tensioned using belt gauge.

Maintenance Procedure

When properly piped, filtered, and applied, little or no routine maintenance is required. Keep the filter clean. Also, all standard models in the DR, EN, CP, and HiE series have sealed bearings that require no maintenance. Bearing should be changed after 15,000 to 20,000 hours, on average. Replacement bearing information is specified on the chart below.

Bearing Part Number	Size	Seal Material	Grease	Heat Stabilized
510217 510218 510219	205 206 207	Polyacrylic	Nye Rheotemp 500 30% +/- 5% Fill	Yes – 325 F
510449 516440 516648	203 202 307	Buna N	Exxon Polyrex Grease	NO
516840 516841 516842 516843 516844 516845 516846 516847	206 207 208 210 309 310 311 313	Buna N	Exxon Polyrex Grease	NO

Troubleshooting

		POSSIBLE CAUSE	OUT OF WARRANTY REMEDY ***
IMPELLER DOES NOT TURN	Humming Sound	1. * One phase of power line not connected 2. * One phase of stator winding open 3. Bearings defective 4. Impeller jammed by foreign material 5. Impeller jammed against housing or cover 6. ** Capacitor open	1. Connect 2. Rewind or buy new motor 3. Change bearings 4. Clean and add filter 5. Adjust 6. Change capacitor
	No Sound	1. * Two phases of power line not connected 2. * Two phases of stator winding open	1. Connect 2. Rewind or buy new motor
IMPELLER TURNS	Blown Fuse	1. Insufficient fuse capacity 2. Short circuit	1. Use time delay fuse of proper rating 2. Repair
	Motor Overheated Or Protector Trips	1. High or low voltage 2. * Operating in single phase condition 3. Bearings defective 4. Impeller rubbing against housing or cover 5. Impeller or air passage clogged by foreign material 6. Unit operating beyond performance range 7. Capacitor shorted 8. * One phase of stator winding short circuited	1. Check input voltage 2. Check connections 3. Check bearings 4. Adjust 5. Clean and add filter 6. Reduce system pressure/vacuum 7. Change capacitor 8. Rewind or buy new motor
	Abnormal Sound	1. Impeller rubbing against housing or cover 2. Impeller or air passages clogged by foreign material 3. Bearings defective	1. Adjust 2. Clean and add filter 3. Change bearings
	Performance Below Standard	1. Leak in piping 2. Piping and air passages clogged 3. Impeller rotation reversed 4. Leak in blower 5. Low voltage	1. Tighten 2. Clean 3. Check wiring 4. Tighten cover, flange 5. Check input voltage

* 3 phase units

** 1 phase units

*** Disassembly and repair of new blowers or motors will void the Rotron warranty. Factory should be contacted prior to any attempt to field repair an in-warranty unit.

Blower Disassembly:

WARNING: Attempting to repair or diagnose a blower may void Rotron's warranty. It may also be difficult to successfully disassemble and reassemble the unit.

1) Disconnect the power leads. **CAUTION:** Be sure the power is disconnected before doing any work whatsoever on the unit.

2) Remove or separate piping and/or mufflers and filters from the unit.

3) Remove the cover bolts and then the cover. **NOTE:** Some units are equipped with seals. It is mandatory that these seals be replaced once the unit has been opened.

4) Remove the impeller bolt and washers and then remove the impeller. **NOTE:** Never pry on the edges of the impeller. Use a puller as necessary.

5) Carefully note the number and location of the shims. Remove and set them aside. NOTE: If the disassembly was for inspection and cleaning the unit may now be reassembled by reversing the above steps. If motor servicing or replacement and/or impeller replacement is required the same shims may not be used. It will be necessary to re-shim the impeller according to the procedure explained under assembly.

6) Remove the housing bolts and remove the motor assembly (arbor/.housing on remote drive models).

7) Arbor disassembly (Applicable on remote drive models only):
   a) Slide the bearing retraining sleeve off the shaft at the blower end.
   b) Remove the four (4) screws and the bearing retaining plate from the blower end.
   c) Lift the shaft assembly far enough out of the arbor to allow removal of the blower end snap ring.
   d) Remove the shaft assembly from the arbor.
   e) If necessary, remove the shaft dust seal from the pulley end of the arbor.

Muffler Material Replacement:

1) Remove the manifold cover bolts and them manifold cover.

2) The muffler material can now be removed and replaced if necessary. On blowers with fiberglass acoustical wrap the tubular retaining screens with the fiberglass matting before sliding the muffler pads over the screens.

3) Reassemble by reversing the procedure.

NOTE: On DR068 models with tubular mufflers it is necessary to remove the cover and impeller accessing the muffler material from the housing cavity.

Blower Reassembly:

1) Place the assembled motor (assembled arbor assembly for remote drive models) against the rear of the housing and fasten with the bolts and washer.

2) To ensure the impeller is centered within the housing cavity re-shim the impeller according to the procedure outlined below.

3) If blower had a seal replace the seal with a new one.

4) Place the impeller onto the shaft making sure the shaft key is in place and fasten with the bolt, washer and spacer as applicable. Torque the impeller bolt per the table below. Once fastened carefully rotate the impeller to be sure it turns freely.

5) Replace the cover and fasten with bolts.

6) Reconnect the power leads to the motor per the motor nameplate.

Bolt Size	Torque Pound-Force-Foot
1/4-20	6.25 +/- 0.25
5/16-18	11.5 +/- 0.25
3/8-16	20.0 +/- 0.5
½-13	49.0 +/- 1
5/8 –11	90.0 +/- 2

Impeller Shimming Procedure:

WARNING: This unit may be difficult to shim. Extreme care may be exercised.

Tools Needed: Machinist's Parallel Bar
Vernier Caliper with depth measuring capability
Feeler gauges or depth gauge

Measure the Following:

Distance from the flange face to the housing (A)
Distance from the flange face to the motor shaft shoulder (B)
Impeller Thickness (C)

Measurements (A) and (B) are made by laying the parallel bar across the housing flange face and measuring to the proper points. Each measurement should be made at three points, and the average of the readings should be used.

Shim Thickness = B – (A+C)/2

After the impeller installation (step #4 above) the impeller/cover clearance can be checked with feeler gauges, laying the parallel bar across the housing flange face. This clearance should nominally be (A-C)/2.

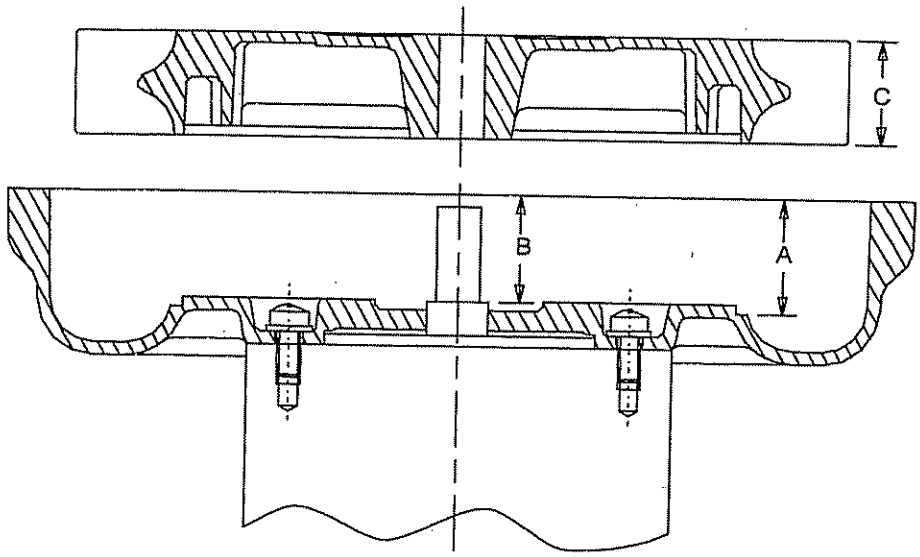

ASSEMBLY DIAGRAM
REMOTE DRIVE BLOWERS

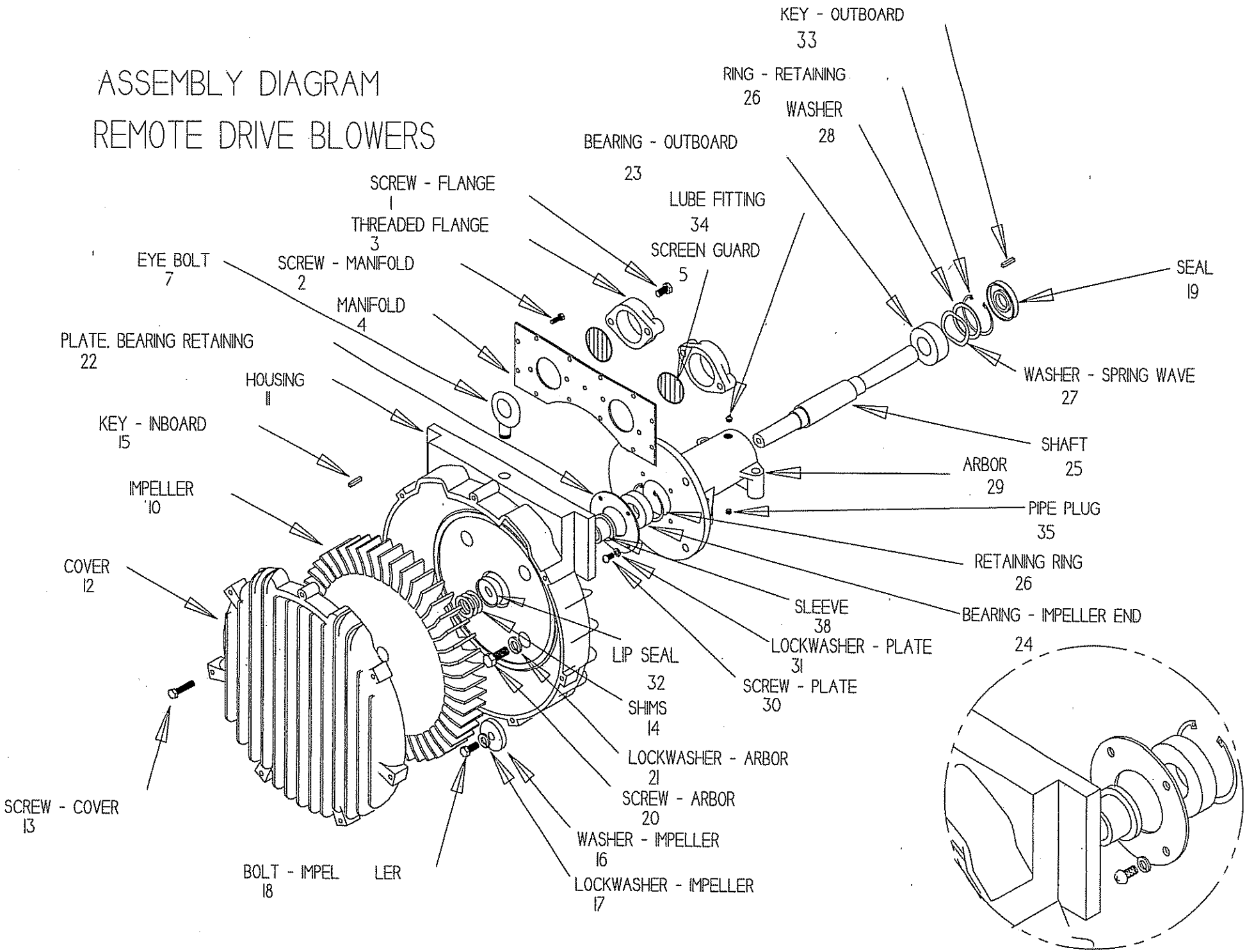

Remote Drive DR909RDNT/14RDNT/14RDM/623RD/823RD/1223RD
Service and Parts Manual

Parts Breakdown

Model:	DR909RDNT	DR14RDNT	DR14RDM	DR623RD***	DR823RD***	DR1223RD***
Part No.:	036921	036963	***038755***	038377	038378	038379
			OBSOLETE			

Item No.	Qty. Req'd	Description				
1	6	Screw, Flange	(4) 155025	(4 pcs) 155025	140016	NON FIELD REPAIRABLE
2	18	Screw, Manifold	120325	120325	Not Used	NON FIELD REPAIRABLE
3	2	Flange	511516	515985	529912	NON FIELD REPAIRABLE
3B	2	O-Ring Flange	Not Used	Not Used	155377	NON FIELD REPAIRABLE
4	1	Manifold	511565	523438	Not Used	NON FIELD REPAIRABLE
4B	1	Manifold Sheet Steel	523435	515987	Not Used	NON FIELD REPAIRABLE
5		Screen Guard	Not Used	Not Used	Not Used	NON FIELD REPAIRABLE
6	54	Muffler Material	Not Used	Not Used	550073	NON FIELD REPAIRABLE
	1	Screen, Muffler Retaining,	Not Used	Not Used	550040	NON FIELD REPAIRABLE
	1	Screen, Muffler Retaining,	Not Used	Not Used	550042	NON FIELD REPAIRABLE
	2	Muffler Wrap	Not Used	Not Used	550116	NON FIELD REPAIRABLE
7	1	Eyebolt	140019	140019	140019	NON FIELD REPAIRABLE
8	4	Screw, Muffler Hsg/Hsg	Not Used	Not Used	120214	NON FIELD REPAIRABLE
8A	6	Screw, Muffler Hsg/Hsg	Not Used	Not Used	155067	NON FIELD REPAIRABLE
10	1	Impeller	515270	515509	515509	NON FIELD REPAIRABLE
11	1	Housing	515276	515973	515975	NON FIELD REPAIRABLE
11B	1	Muffler Housing	Not Used	Not Used	550039	NON FIELD REPAIRABLE
12	1	Cover	515359	515910	515910	NON FIELD REPAIRABLE
13	8	Screw, Cover	140016	155069	155069	NON FIELD REPAIRABLE
14	*	Shim .002"	511547	515991	515991	NON FIELD REPAIRABLE
	*	Shim .005"	511548	515992	515992	NON FIELD REPAIRABLE
	*	Shim .010"	511549	515993	515993	NON FIELD REPAIRABLE
	*	Shim .020"	511550	515994	515994	NON FIELD REPAIRABLE
	*	Shim .030"	Not Used	Not Used	Not Used	NON FIELD REPAIRABLE
15	1	Key, Shaft Inboard	511532	155066	155066	NON FIELD REPAIRABLE
16	1	Washer Flat Impeller	511529	515990	515990	NON FIELD REPAIRABLE

*As needed **Viewed looking at inlet/outlet ports

Parts Breakdown

Item No.	Qty. Req'd	Description	DR909RDNT	DR14RDNT	DR14RDM	DR623RD***	DR823RD***	DR1223RD***
		Model:			*038755*			
		Part No.:	036921	036963	*OBSOLETE*	038377	038378	038379
17	1	Lockwasher Impeller	251788	251788	251788	NON FIELD REPAIRABLE		
18	1	Bolt, Impeller	120210	120210	120210	NON FIELD REPAIRABLE		
		Spacer, Shaft/Impeller	Not Used	Not Used	Not Used	NON FIELD REPAIRABLE		
19	1	Seal, Shaft/Arbor	516306	516306	516306	NON FIELD REPAIRABLE		
		Retainer Seal	Not Used	Not Used	Not Used	NON FIELD REPAIRABLE		
20	4	Screw, Hsg/Arbor	155034	140014	120205	NON FIELD REPAIRABLE		
21		Lockwasher, Hsg/Arbor	Not Used	Not Used	Not Used	NON FIELD REPAIRABLE		
22	1	Plate, Bearing Retainer	516313	516313	516313	NON FIELD REPAIRABLE		
23	1	Bearing Outboard	516303	529194	529194	NON FIELD REPAIRABLE		
24	1	Bearing, Impeller End	516301	516843	516843	NON FIELD REPAIRABLE		
25	1	Shaft	516335	516311	516311	NON FIELD REPAIRABLE		
26	2	Ring Retainer	155086	155086	155086	NON FIELD REPAIRABLE		
27	1	Washer, Wave Spring	155087	155087	155087	NON FIELD REPAIRABLE		
28	1	Washer	516305	(2 pcs)155507	516305	NON FIELD REPAIRABLE		
29	1	Arbor	516309	516310	516310	NON FIELD REPAIRABLE		
30	4	Screw, Plate	120204	120204	120204	NON FIELD REPAIRABLE		
31	4	Lockwasher, Plate	120203	120203	120203	NON FIELD REPAIRABLE		
32		Lip Seal, Shaft/Hsg	Not Used	Not Used	Not Used	NON FIELD REPAIRABLE		
33	1	Key, Shaft Outboard	155089	155089	155089	NON FIELD REPAIRABLE		
34	2	Lube Fitting	516307	Not Used	Not Used	NON FIELD REPAIRABLE		
35	2	Pipe Plug	155131	Not Used	Not Used	NON FIELD REPAIRABLE		
36		Heat Slinger Assembly	Not Used	Not Used	Not Used	NON FIELD REPAIRABLE		
38	1	Sleeve, Bearing Retainer	516334	516312	516312	NON FIELD REPAIRABLE		
						Filter 515254 included	Filter 515255 included	Filter 515256 included

*As needed **Viewed looking at inlet/outlet ports

GENERAL INSTALLATION INSTRUCTIONS

AMETEK
ROTRON
ROTRON INDUSTRIAL PRODUCTS
75 North Street, Saugerties NY 12477 U.S.A.
Telephone: 845-246-3401 Fax: 845-246-3832
e-mail: rotronsales@rotron.com website: www.rotronindustrial.com

Rotron Regenerative Blowers

Installation Instructions for SL, DR, EN, CP, and HIE Series Blowers

1. **Bolt It Down** - Any blower must be secured against movement prior to starting or testing to prevent injury or damage The blower does not vibrate much more than a standard electric motor

2. **Filtration** - All blowers should be filtered prior to starting Care must be taken so that no foreign material enters the blower. If foreign material does enter the blower, it could cause internal damage or may exit at extremely high velocity

   Should excessive amounts of material pass through the blower, it is suggested that the cover(s) and impeller(s) be removed periodically and cleaned to avoid impeller imbalance. Impeller imbalance greatly speeds bearing wear, thus reducing blower life. Disassembling the blower will void warranty, so contact the factory for cleaning authorization

3 **Support the Piping** - The blower flanges and nozzles are designed as connection points only and are not designed to be support members

   Caution: Plastic piping should not be used on blowers larger than 1 HP that are operating near their maximum pressure or suction point Blower housing and nearby piping temperatures can exceed 200°F. Access by personnel to the blower or nearby piping should be limited, guarded, or marked to prevent danger of burns

4 **Wiring** - Blowers must be wired and protected/fused in accordance with local and national electrical codes. All blowers must be grounded to prevent electrical shock Slo-Blo or time delay fuses should be used to bypass the first second of start-up amperage

5 **Pressure/Suction Maximums** - The maximum pressure and/or suction listed on the model label should not be exceeded This can be monitored by means of a pressure or suction gage (available from Rotron), installed in the piping at the blower outlet or inlet. Also if problems do arise, the Rotron Field representative will need to know the operating pressure/suction to properly diagnose the problem.

6 **Excess Air** - Bleed excess air off DO NOT throttle to reduce flow When bleeding off excess air, the blower draws less power and runs cooler

   Note: Remote Drive (Motorless) Blowers - Properly designed and installed guards should be used on all belts, pulleys, couplings, etc Observe maximum remote drive speed allowable. Due to the range of uses, drive guards are the responsibility of the customer or user Belts should be tensioned using belt gauge

For further information regarding Rotron regenerative blowers (including service & parts manuals), please contact your local field sales engineer.

Maintenance Procedure

When properly piped, filtered, and applied, little or no routine maintenance is required Keep the filter clean. Also, all standard models in the DR, EN, CP, and HIE series have sealed bearings that require no maintenance Bearing should be changed after 15,000 to 20,000 hours, on average. Replacement bearing information is specified on the chart below

Bearing Part Number	Size	Seal Material	Grease	Heat Stabilized
510217 510218 510219	205 206 207	Polyacrylic	Nye Rheolemp 500 30% +/- 5% Fill	Yes – 325 F
510449 516440 516648	203 202 307	Buna N	Shell Dolium "R" 26-40% Fill	NO
516840 516841 516842 516843 516844 516845 516846 516847	206 207 208 210 309 310 311 313	Buna N	Shell Dolium "R" 30%+/- 5% Fill	NO

Troubleshooting

		POSSIBLE CAUSE	OUT OF WARRANTY REMEDY ***
IMPELLER DOES NOT TURN	Humming Sound	1 * One phase of power line not connected	1. Connect
		2 * One phase of stator winding open	2 Rewind or buy new motor
		3 Bearings defective	3. Change bearings
		4 Impeller jammed by foreign material	4 Clean and add filter
		5 Impeller jammed against housing or cover	5 Adjust
		6. ** Capacitor open	6 Change capacitor
	No Sound	1 * Two phases of power line not connected	1 Connect
		2. * Two phases of stator winding open	2. Rewind or buy new motor
IMPELLER TURNS	Blown Fuse	1 Insufficient fuse capacity	1 Use time delay fuse of proper rating
		2. Short circuit	2. Repair
	Motor Overheated Or Protector Trips	1 High or low voltage	1 Check input voltage
		2 * Operating in single phase condition	2 Check connections
		3 Bearings defective	3 Check bearings
		4 Impeller rubbing against housing or cover	4 Adjust
		5 Impeller or air passage clogged by foreign material	5. Clean and add filter
		6. Unit operating beyond performance range	6. Reduce system pressure/vacuum
		7 Capacitor shorted	7 Change capacitor
		8 * One phase of stator winding short circuited	8. Rewind or buy new motor
	Abnormal Sound	1 Impeller rubbing against housing or cover	1 Adjust
		2 Impeller or air passages clogged by foreign material	2 Clean and add filter
		3. Bearings defective	3. Change bearings
	Performance Below Standard	1 Leak in piping	1 Tighten
		2 Piping and air passages clogged	2 Clean
		3 Impeller rotation reversed	3 Check wiring
		4 Leak in blower	4 Tighten cover, flange
		5. Low voltage	5. Check input voltage

* 3 phase units
** 1 phase units
*** Disassembly and repair of new blowers or motors will void the Rotron warranty Factory should be contacted prior to any attempt to field repair an in-warranty unit

Series 1800 Low Differential Pressure Switches for General Industrial Service

Specifications — Installation and Operating Instructions

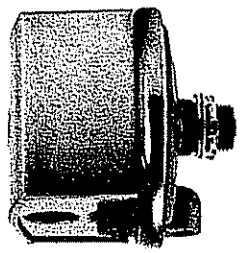

Model 1823 pressure switch. UL and CSA Listed, FM and CENELEC approved.

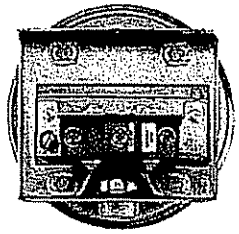

Series 1823 pressure switch. Conduit enclosure removed to show electric switch.

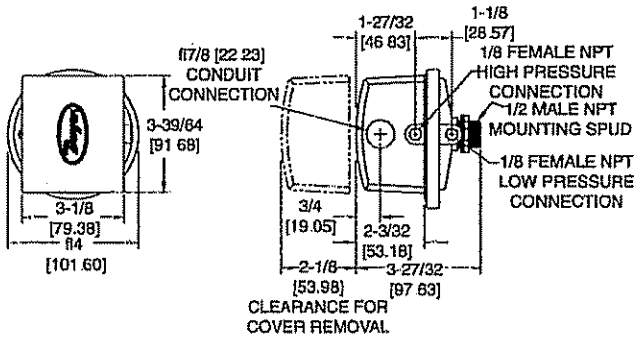

Construction and dimensions. Series 1823 pressure switches

One of our most popular pressure switches. Combines small size and low price with 2% repeatability for enough accuracy for all but the most demanding applications. Set point adjustment inside the mounting switch on one side of a wall or panel with adjustment easily accessible on the opposite side.

***Model 1823 shown; (1823 replaces 1820, 1821 and 1822 which are similar).**

Environmental (MIL) Switch

Unlisted Model 1820 can be furnished with special snap switch sealed against the environment for high humidity and/or for government applications. Similar to standard Model 1823 except dead band is slightly greater. Specify Model 1820 (Range No.) "MIL" in ordering.

SERIES 1823 SWITCHES — OPERATING RANGES & DEADBANDS

Model Number	Operating Range, Inches W.C.	Approximate Dead Band	
		At Min. Set Point	At Max. Set Point
1823-00	0.07 to 0.22	0.05	0.05
1823-0	0.15 to 0.5	0.06	0.06
1823-1	0.3 to 1.0	0.08	0.08
1823-2	0.5 to 2.0	0.10	0.12
1823-5	1.5 to 5.0	0.14	0.28
1823-10	2.0 to10	0.18	0.45
1823-20	3 to 22	0.35	0.70
1823-40	5 to 44	0.56	1.10
1823-80	9 to 85	1.30	3.0

SPECIFICATIONS

Service: Air and non-combustible, compatible gases

Wetted Materials: Consult Factory.

Temperature Limits: -30 to 180°F (-34 to 82.2°C) 1823-00, -20 to 180°F (-28.9 to 82.2°C)

Pressure Limits: 10 psig (68.95 kPa) continuous, 25 psig (172.4 kPa) surge

Switch Type: Single-pole double-throw (SPDT)

Repeatability: ±2%

Electrical Rating: 15 A @ 120-480 VAC, 60 Hz. Resistive 1/8 HP @125 VAC, 1/4 HP @ 250 VAC, 60 Hz. De-rate to 10 A for operation at high cycle rates

Electrical Connections: 3 screw type, common, normally open and normally closed

Process Connections: 1/8" female NPT.

Mounting Orientation: Diaphragm in vertical position. Consult factory for other position orientations.

Set Point Adjustment: Screw type inside mounting spud

Weight: 1 lb, 5 oz (595 g)

Agency Approvals: CE, UL, CSA, FM

DWYER INSTRUMENTS, INC.
P.O. BOX 373 • MICHIGAN CITY, INDIANA 46361, U.S.A.
Phone: 219/879-8000 www.dwyer-inst.com
Fax: 219/872-9057 e-mail: info@dwyer-inst.com

INSTALLATION

1 Select a location free form excessive vibration and where oil or water will not drip upon the switch See special housings for unusual conditions

2 **While not required, positioning the pressure connections down is recommended.** Mount the switch with the diaphragm in a vertical plane Switch with the diaphragm in a vertical plane Switch must be recalibrated for each change in operating position

3 Connect switch to source of pressure differential Metal tubing with 1/4" O D is recommended but any tubing system which will not restrict the air flow is satisfactory Note that the low pressure connection may be made to the 1/2" spud at the back of the switch if desired. If so connected, drill 1/16" diameter holes in the Spring Retainer flange and the head of Adjustment Screw to provide opening to the switch interior and plug the other low pressure connection

4 Electrical connections to the standard single pole, double throw snap switch are provided by means of screw terminals marked "common", "norm open", and "norm closed" The normally open contacts close and the normally closed contact open when pressure increases beyond the set point

5 Switch loads should not exceed the maximum specified current rating of 15 amps resistive Switch capabilities decrease with high load inductance or rapid cycle rates whenever and application involves one or more of these factors, the user may find it desirable to limit the switched current to 10 amps or less in the interest of prolonged switch life

ADJUSTMENT

1 If the switch has been factory preset, check the set-point before placing in service to assure it has not shifted in transit

2 If switching has not been preset or it is desired to change the point, observe the following procedure:

a To adjust the set point turn the slotted Adjustment Screw clockwise to increase the set point and counterclockwise to decrease the set point.

b The following is a recommended procedure for calibrating or checking calibration: Use a "T" assembly with three rubber tubing leads, all as short as possible and the entire assembly offering minimum flow restriction Run one lead to the pressure switch, another to a manometer of known accuracy and appropriate range, and apply pressure through the third tube Make final approach to the set point slowly Note the manometer and pressure switch will have different response characteristics due to different internal volumes, lengths of tubing, oil drainage, etc Be certain switch is checked in position it will assume in use, i e vertical, horizontal, etc

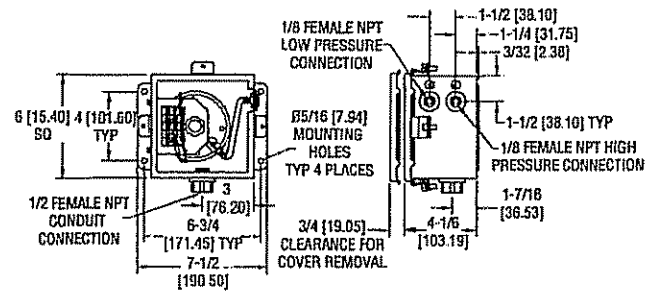

Weatherproof Enclosure

16 ga. steel enclosure for unusually wet or oily conditions. Withstands 200 hour salt spray test Gasketed cover. Weight 5-1/2 lb (2.5 kg) Switch must be installed at factory Specify "WP" in addition to switch catalog number.

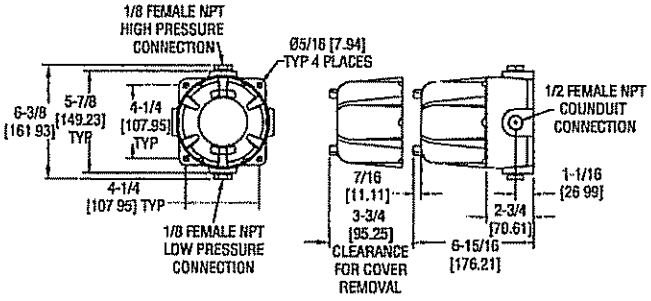

Explosion-Proof Housing

Cast iron base and aluminum dome cover. Approximate weight 7-1/2 lb (3.4 kg) Specify "EXPL" in addition to switch catalog number.

DWYER INSTRUMENTS, INC.
P.O. BOX 373 • MICHIGAN CITY, INDIANA 46361, U.S.A.
Phone: 219/879-8000 www.dwyer-inst.com
Fax: 219/872-9057 e-mail: info@dwyer-inst.com

FLOTECT MODEL L-6 FLOAT SWITCH

Installation and Operating Instructions

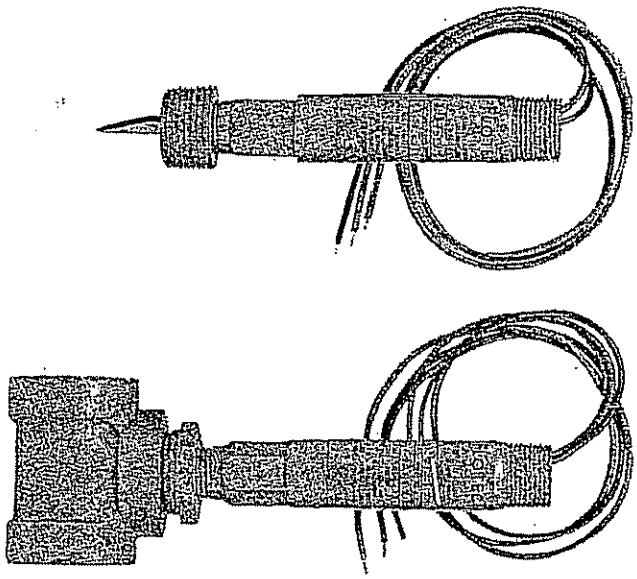

Explosion-Proof; U.L. and C.S.A. Listed -
Class I, Groups *A, B, C & D
Class II, Groups E, F & G
CENELEC: EExd IIC T6 (T amb=75°C)
*(Group A, stainless steel body only)

PHYSICAL DATA

Temperature Limit: 220°F (105°C) maximum
Maximum Pressure: See chart below
Switches: One or two SPDT snap switches
Electrical Rating: U.L.: 5A @ 125/250 VAC
C.S.A. and CENELEC: 5A @ 125/250 VAC, 5A resistive, 3A inductive @ 30 VDC
Optional ratings: MV option—Gold contacts for dry circuits Rated 0.1A @ 125 VAC MT option: 400°F (205°C) 5A @ 125/250 VAC (not listed)
Wiring Connections: 3-18" (460mm) wire leads, 18 ga.
CENELEC models only: push-in type terminal blocks Black = common, blue = N.O., red = N.C.
Minimum Specific Gravity:
Polypropylene float - 0.9
Round SS float - 0.7
Cylindrical SS float - 0.5
Switch Body: Brass 3/4" NPT conduit connection.
For SS switch body, change model no. to L6EPS
Piping/Mounting Connection: 1" NPT
Installation: Horizontal, index arrow pointing down.
Weight: 1 lb. (.5 KG); w/external chamber 1-3/4 lb. (.8 KG)

WETTED MATERIALS CHART

Model	Brass	Bronze	Ceramic	Polypropylene	301SS	303SS	304SS
B-S-3-A	X		X		X		X
B-S-3-B	X	X	X	X	X		
B-S-3-C	X		X		X		X
B-S-3-H	X	X	X		X		X
B-S-3-O	X		X	X	X		
S-S-3-A			X	X	X		X
S-S-3-C			X		X	X	X
S-S-3-L			X		X	X	X
S-S-3-O			X	X	X	X	
S-S-3-S			X	X	X	X	

MAXIMUM PRESSURE CHART

Model Number	Float	Pressure Rating PSIG (KG/CM²)
L6EPB-B-S-3-A	Cylindrical SS	200 (14)
L6EPB-B-S-3-B	Polypropylene	250 (18)
L6EPB-B-S-3-C	Round SS	350 (25)
L6EPB-B-S-3-H	Round SS	250 (18)
L6EPB-B-S-3-O	Polypropylene	1000 (70)
L6EPB-S-S-3-A	Cylindrical SS	200 (14)
L6EPB-S-S-3-C	Round SS	350 (25)
L6EPB S-S-3-L	Round SS	350 (25)
L6EPB-S-S-3-O	Polypropylene	2000 (140)
L6EPB-S-S-3-S	Polypropylene	2000 (140)

INSTALLATION:

Unpack switch and remove any packing material found inside lower housing or float chamber.

Switch must be installed with body in a horizontal plane and arrow on side pointing down

If switch has an external float chamber (tee), connect it to vertical sections of 1" NPT pipe installed outside vessel walls at appropriate levels. If unit has no external float chamber, it must be mounted in a 1" NPT half coupling welded to the vessel wall. The coupling must extend through the wall

Inspect and clean wetted parts at regular intervals

ELECTRICAL CONNECTIONS:

Connect wire leads in accordance with local electrical codes and switch action required. N.O. contacts will close and N.C. contacts will open when liquid level causes float to rise. They will return to "normal" condition on decreasing liquid level. Black = common, Blue = N.O. and Red = N.C.

For units supplied with both internal and external grounds, the ground screw inside the housing must be used to ground the control. The external ground screw is for supplementary bonding when allowed or required by local code. Some CSA listed models are furnished with a separate green ground wire. Such units must be equipped with a junction box, not supplied but available on special order.

CENELEC certified models include a junction box. Cable should enter enclosure through an approved EX cable gland, not supplied. Push stripped and tinned leads into appropriate openings in terminal block(s). To connect fine stranded leads or to remove any wire, depress spring release with small screwdriver first.

All wiring, conduit and enclosures must meet applicable codes for hazardous areas. Conduits and enclosures must be properly sealed. For outdoor or other locations where temperatures vary widely, precautions should be taken to prevent condensation inside switch or enclosure. Electrical components must be kept dry at all times. **CAUTION:** To prevent ignition of hazardous atmospheres, disconnect the device from the supply circuit before opening. Keep assembly tightly closed when in use.

Dimensions on reverse

W.E. ANDERSON DIV. DWYER INSTRUMENTS, INC.
P.O. BOX 358 • MICHIGAN CITY, INDIANA 46360 U.S.A.
Telephone 219/879-8000
Fax 219/872-9057

FLOTECT™ MODEL L-6 FLOAT SWITCH — DIMENSION DRAWINGS

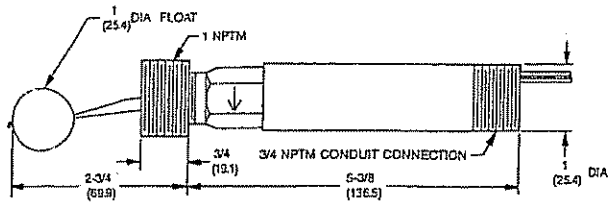

Polypropylene Float

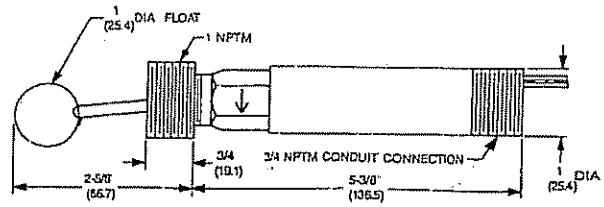

Round Stainless Steel Float

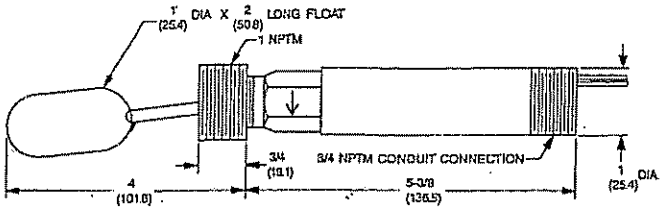

Cylindrical Stainless Steel Float

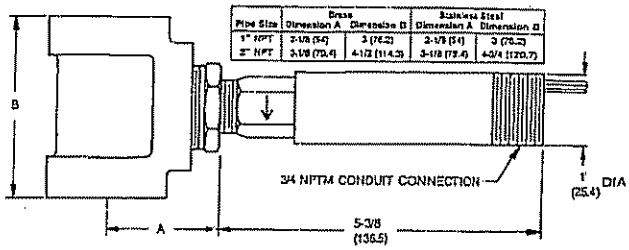

With External Float Chamber (Tee)

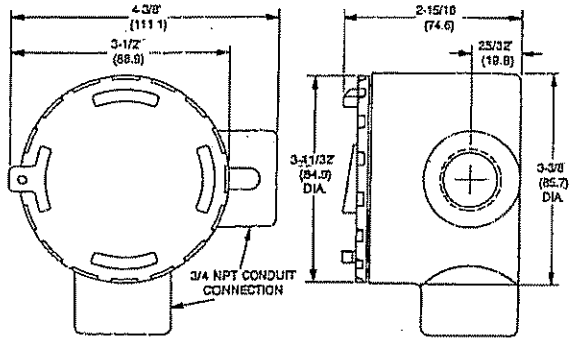

CSA, CENELEC Conduit Enclosure

Limited Warranty: The Seller warrants all Dwyer Instruments and equipment to be free from defects in workmanship or material under normal use and service for a period of one year from date of shipment. Liability under this warranty is limited to repair or replacement F.O.B. factory of any parts which prove to be defective within that time or repayment of the purchase price at the Seller's opinion provided the instruments have been returned, transportation prepaid, within one year from the date of purchase. All technical advice, recommendations and services are based on technical data and information which the Seller believes to be reliable and are intended for use by persons having skill and knowledge of the business, at their own discretion. In no case is Seller liable beyond replacement of equipment F.O.B. factory or the full purchase price. This warranty does not apply if the maximum ratings label is removed or if the instrument or equipment is abused, altered, used at ratings above the maximum specified or otherwise misused in any way.

THIS EXPRESS LIMITED WARRANTY IS IN LIEU OF AND EXCLUDES ALL OTHER REPRESENTATIONS MADE BY ADVERTISEMENTS OR BY AGENTS AND ALL OTHER WARRANTIES, BOTH EXPRESS AND IMPLIED. THERE ARE NO IMPLIED WARRANTIES OF MERCHANTABILITY OR OF FITNESS FOR A PARTICULAR PURPOSE FOR GOODS COVERED HEREUNDER.

Buyers Remedies: THE BUYER'S EXCLUSIVE AND SOLE REMEDY ON ACCOUNT OF OR IN RESPECT TO THE FURNISHING OF NONCONFORMING OR DEFECTIVE MATERIAL SHALL BE TO SECURE REPLACEMENT THEREOF AS AFORESAID. THE SELLER SHALL NOT IN ANY EVENT BE LIABLE FOR THE COST OF ANY LABOR EXPENDED ON ANY SUCH MATERIAL OR FOR ANY SPECIAL, DIRECT, INDIRECT OR CONSEQUENTIAL DAMAGES TO ANYONE BY REASON OF THE FACT THAT IT SHALL HAVE BEEN NON-CONFORMING OR DEFECTIVE.

W.E. ANDERSON DIV. DWYER INSTRUMENTS, INC.
P.O. Box 358
Michigan City, IN 46360
Phone: 219/879-8000
Fax: 219/872-9057

Copyright © 1998 Dwyer Instruments, Inc.

FR 12-1072-00
Printed in U.S.A. 10/98

Note: A moisture separator is not a substitute for an inline air filter. A Rotron inline filter should be used to remove particles that pass through the separator.

Typical Vapor Extraction System

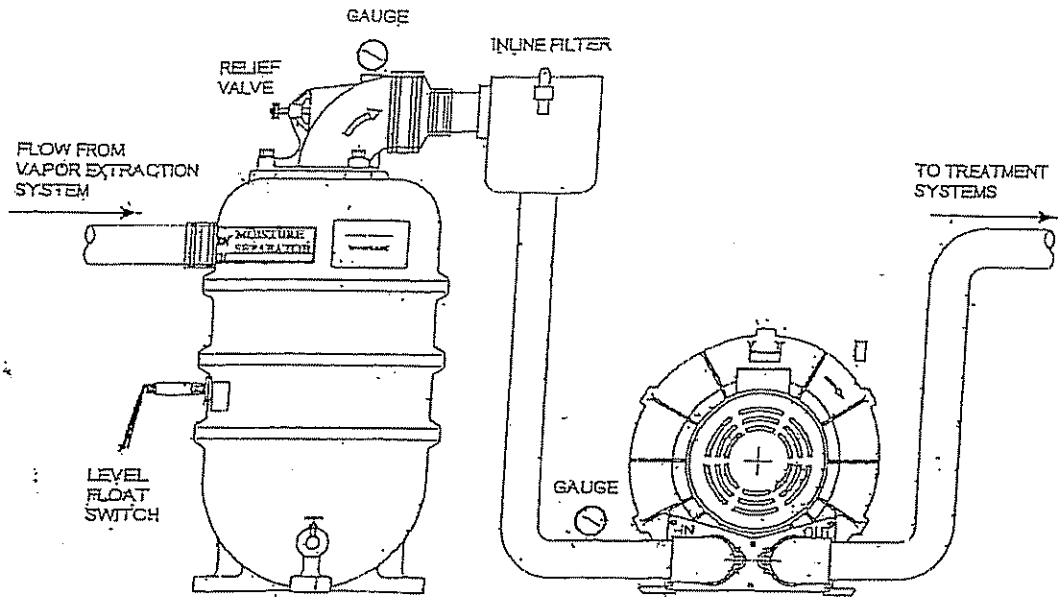

Operation

Moisture-laden air enters the separator through the tangential inlet. Cyclonic action removes free moisture from the air stream and allows the air to discharge through the top of the separator. When the separator is full, the float valve shuts off the air flow through the separator, and the relief valve opens to limit the vacuum of the blower.

To drain the separator, turn off the blower and open the drain valve at the bottom of the separator. Caution: The liquid contained in the separator should be analyzed before it is released back into the environment. It may be considered hazardous waste in certain geographical areas and require special treatment/disposal. Once the liquid is drained, the unit can be reset by turning the blower back on.

Automatic draining options are at the discretion of the customer.

Maintenance

This MS series moisture separator has been designed to require minimal maintenance. During normal operation a layer of sludge may build up on the bottom of the separator. As necessary, the top assembly of the moisture separator should be removed and the inside cleaned out with water. Keeping the inside clean will prevent the alve from becoming clogged with sediment. The relief valve should be inspected upon emptying the separator d readjusted (per installation instruction 5) upon restart.

have any questions regarding this product, contact your local sales representative or our Application ering Department at the factory.

APPENDIX C
SVE FLOW CONVERSION CHARTS

OPERATIONS AND MAINTENANCE MANUAL
Soil Vapor Extraction System
Allison's Norge Village
120 Northeast Turner Street
Olympia, Washington

Farallon PN: 663-010

AIR FLOW SCFM IN **2-INCH DIAMETER** (NOMINAL) **SCHED. 40 PVC PIPE** (D=2.067")

Q (SCFM)=128.8xKxDxD(PxdP/(T+460)xSs)E-2 **Using DWYER DS-300 FLOW SENSOR**

K, 2"dia.= 0.64 P, psig= 14.7 Flows Not Recommended By Dwyer Inst.

D, in.= 2.067 T, deg. F 60

dP in INCHES OF WATER COLUMN Ss = SPECIFIC GRAVITY AT 60 DEGREES F (AIR = 1.00)

dP	Q	dP	Q	dP	Q	dP	Q	dP	Q
0.01	5.92	0.51	42.3	1.01	59.5	1.51	72.8	2.01	84.0
0.02	8.37	0.52	42.7	1.02	59.8	1.52	73.0	2.02	84.2
0.03	10.26	0.53	43.1	1.03	60.1	1.53	73.2	2.03	84.4
0.04	11.84	0.54	43.5	1.04	60.4	1.54	73.5	2.04	84.6
0.05	13.24	0.55	43.9	1.05	60.7	1.55	73.7	2.05	84.8
0.06	14.50	0.56	44.3	1.06	61.0	1.56	74.0	2.06	85.0
0.07	15.67	0.57	44.7	1.07	61.3	1.57	74.2	2.07	85.2
0.08	16.75	0.58	45.1	1.08	61.5	1.58	74.4	2.08	85.4
0.09	17.76	0.59	45.5	1.09	61.8	1.59	74.7	2.09	85.6
0.1	18.73	0.6	45.9	1.1	62.1	1.6	74.9	2.1	85.8
0.11	19.64	0.61	46.2	1.11	62.4	1.61	75.1	2.11	86.0
0.12	20.51	0.62	46.6	1.12	62.7	1.62	75.4	2.12	86.2
0.13	21.35	0.63	47.0	1.13	62.9	1.63	75.6	2.13	86.4
0.14	22.16	0.64	47.4	1.14	63.2	1.64	75.8	2.14	86.6
0.15	22.93	0.65	47.7	1.15	63.5	1.65	76.1	2.15	86.8
0.16	23.69	0.66	48.1	1.16	63.8	1.66	76.3	2.16	87.0
0.17	24.42	0.67	48.5	1.17	64.1	1.67	76.5	2.17	87.2
0.18	25.12	0.68	48.8	1.18	64.3	1.68	76.8	2.18	87.4
0.19	25.81	0.69	49.2	1.19	64.6	1.69	77.0	2.19	87.6
0.2	26.48	0.7	49.5	1.2	64.9	1.7	77.2	2.2	87.8
0.21	27.14	0.71	49.9	1.21	65.1	1.71	77.4	2.21	88.0
0.22	27.77	0.72	50.2	1.22	65.4	1.72	77.7	2.22	88.2
0.23	28.40	0.73	50.6	1.23	65.7	1.73	77.9	2.23	88.4
0.24	29.01	0.74	50.9	1.24	65.9	1.74	78.1	2.24	88.6
0.25	29.61	0.75	51.3	1.25	66.2	1.75	78.3	2.25	88.8
0.26	30.19	0.76	51.6	1.26	66.5	1.76	78.6	2.26	89.0
0.27	30.77	0.77	52.0	1.27	66.7	1.77	78.8	2.27	89.2
0.28	31.33	0.78	52.3	1.28	67.0	1.78	79.0	2.28	89.4
0.29	31.89	0.79	52.6	1.29	67.3	1.79	79.2	2.29	89.6
0.3	32.43	0.8	53.0	1.3	67.5	1.8	79.4	2.3	89.8
0.31	32.97	0.81	53.3	1.31	67.8	1.81	79.7	2.31	90.0
0.32	33.50	0.82	53.6	1.32	68.0	1.82	79.9	2.32	90.2
0.33	34.02	0.83	53.9	1.33	68.3	1.83	80.1	2.33	90.4
0.34	34.53	0.84	54.3	1.34	68.5	1.84	80.3	2.34	90.6
0.35	35.03	0.85	54.6	1.35	68.8	1.85	80.5	2.35	90.8
0.36	35.53	0.86	54.9	1.36	69.1	1.86	80.8	2.36	91.0
0.37	36.02	0.87	55.2	1.37	69.3	1.87	81.0	2.37	91.2
0.38	36.50	0.88	55.5	1.38	69.6	1.88	81.2	2.38	91.4
0.39	36.98	0.89	55.9	1.39	69.8	1.89	81.4	2.39	91.5
0.4	37.45	0.9	56.2	1.4	70.1	1.9	81.6	2.4	91.7
0.41	37.92	0.91	56.5	1.41	70.3	1.91	81.8	2.41	91.9
0.42	38.38	0.92	56.8	1.42	70.6	1.92	82.1	2.42	92.1
0.43	38.83	0.93	57.1	1.43	70.8	1.93	82.3	2.43	92.3
0.44	39.28	0.94	57.4	1.44	71.1	1.94	82.5	2.44	92.5
0.45	39.72	0.95	57.7	1.45	71.3	1.95	82.7	2.45	92.7
0.46	40.16	0.96	58.0	1.46	71.6	1.96	82.9	2.46	92.9
0.47	40.60	0.97	58.3	1.47	71.8	1.97	83.1	2.47	93.1
0.48	41.03	0.98	58.6	1.48	72.0	1.98	83.3	2.48	93.3
0.49	41.45	0.99	58.9	1.49	72.3	1.99	83.5	2.49	93.4
0.5	41.87	1	59.2	1.5	72.5	2	83.7	2.5	93.6

AIR FLOW SCFM IN **2-INCH DIAMETER** (NOMINAL) **SCHED. 40 PVC PIPE** (D=2.067")

Q (SCFM)=128.8xKxDxD(PxdP/(T+460)xSs)E-2 **Using DWYER DS-300 FLOW SENSOR**

K, 2"dia.= 0.64 P, psig= 14.7

D, in.= 2.07 T, deg. F 60

dP in INCHES OF WATER COLUMN Ss = SPECIFIC GRAVITY AT 60 DEGREES F (AIR = 1.00)

dP	Q	dP	Q	dP	Q	dP	Q	dP	Q
2.51	93.8	3.01	102.7	3.51	110.9	4.01	118.6	4.51	125.8
2.52	94.00	3.02	102.9	3.52	111.1	4.02	118.7	4.52	125.9
2.53	94.19	3.03	103.1	3.53	111.3	4.03	118.9	4.53	126.0
2.54	94.37	3.04	103.2	3.54	111.4	4.04	119.0	4.54	126.2
2.55	94.56	3.05	103.4	3.55	111.6	4.05	119.2	4.55	126.3
2.56	94.74	3.06	103.6	3.56	111.7	4.06	119.3	4.56	126.4
2.57	94.93	3.07	103.8	3.57	111.9	4.07	119.5	4.57	126.6
2.58	95.11	3.08	103.9	3.58	112.0	4.08	119.6	4.58	126.7
2.59	95.30	3.09	104.1	3.59	112.2	4.09	119.8	4.59	126.9
2.6	95.48	3.1	104.3	3.6	112.4	4.1	119.9	4.6	127.0
2.61	95.67	3.11	104.4	3.61	112.5	4.11	120.0	4.61	127.1
2.62	95.85	3.12	104.6	3.62	112.7	4.12	120.2	4.62	127.3
2.63	96.03	3.13	104.8	3.63	112.8	4.13	120.3	4.63	127.4
2.64	96.21	3.14	104.9	3.64	113.0	4.14	120.5	4.64	127.6
2.65	96.40	3.15	105.1	3.65	113.1	4.15	120.6	4.65	127.7
2.66	96.58	3.16	105.3	3.66	113.3	4.16	120.8	4.66	127.8
2.67	96.76	3.17	105.4	3.67	113.4	4.17	120.9	4.67	128.0
2.68	96.94	3.18	105.6	3.68	113.6	4.18	121.1	4.68	128.1
2.69	97.12	3.19	105.8	3.69	113.7	4.19	121.2	4.69	128.2
2.7	97.30	3.2	105.9	3.7	113.9	4.2	121.4	4.7	128.4
2.71	97.48	3.21	106.1	3.71	114.1	4.21	121.5	4.71	128.5
2.72	97.66	3.22	106.3	3.72	114.2	4.22	121.6	4.72	128.6
2.73	97.84	3.23	106.4	3.73	114.4	4.23	121.8	4.73	128.8
2.74	98.02	3.24	106.6	3.74	114.5	4.24	121.9	4.74	128.9
2.75	98.20	3.25	106.8	3.75	114.7	4.25	122.1	4.75	129.1
2.76	98.38	3.26	106.9	3.76	114.8	4.26	122.2	4.76	129.2
2.77	98.55	3.27	107.1	3.77	115.0	4.27	122.4	4.77	129.3
2.78	98.73	3.28	107.2	3.78	115.1	4.28	122.5	4.78	129.5
2.79	98.91	3.29	107.4	3.79	115.3	4.29	122.6	4.79	129.6
2.8	99.09	3.3	107.6	3.8	115.4	4.3	122.8	4.8	129.7
2.81	99.26	3.31	107.7	3.81	115.6	4.31	122.9	4.81	129.9
2.82	99.44	3.32	107.9	3.82	115.7	4.32	123.1	4.82	130.0
2.83	99.62	3.33	108.1	3.83	115.9	4.33	123.2	4.83	130.1
2.84	99.79	3.34	108.2	3.84	116.0	4.34	123.4	4.84	130.3
2.85	99.97	3.35	108.4	3.85	116.2	4.35	123.5	4.85	130.4
2.86	100.14	3.36	108.5	3.86	116.3	4.36	123.6	4.86	130.5
2.87	100.32	3.37	108.7	3.87	116.5	4.37	123.8	4.87	130.7
2.88	100.49	3.38	108.9	3.88	116.6	4.38	123.9	4.88	130.8
2.89	100.67	3.39	109.0	3.89	116.8	4.39	124.1	4.89	130.9
2.9	100.84	3.4	109.2	3.9	116.9	4.4	124.2	4.9	131.1
2.91	101.01	3.41	109.3	3.91	117.1	4.41	124.4	4.91	131.2
2.92	101.19	3.42	109.5	3.92	117.2	4.42	124.5	4.92	131.3
2.93	101.36	3.43	109.7	3.93	117.4	4.43	124.6	4.93	131.5
2.94	101.53	3.44	109.8	3.94	117.5	4.44	124.8	4.94	131.6
2.95	101.71	3.45	110.0	3.95	117.7	4.45	124.9	4.95	131.7
2.96	101.88	3.46	110.1	3.96	117.8	4.46	125.1	4.96	131.9
2.97	102.05	3.47	110.3	3.97	118.0	4.47	125.2	4.97	132.0
2.98	102.22	3.48	110.5	3.98	118.1	4.48	125.3	4.98	132.1
2.99	102.39	3.49	110.6	3.99	118.3	4.49	125.5	4.99	132.3
3	102.56	3.5	110.8	4	118.4	4.5	125.6	5	132.4

AIR FLOW SCFM IN **2-INCH DIAMETER** (NOMINAL) **SCHED. 40 PVC PIPE** (D=2.067")

Q (SCFM)=128.8xKxDxD(PxdP/(T+460)xSs)E-2 **Using DWYER DS-300 FLOW SENSOR**

K, 2"dia.= 0.6 P, psig= 14.7

D, in.= 2.1 T, deg F 60

dP in INCHES OF WATER COLUMN Ss = SPECIFIC GRAVITY AT 60 DEGREES F (AIR = 1.00)

dP	Q	dP	Q	dP	Q	dP	Q	dP	Q
5.01	132.5	5.51	139.0	6.01	145.2	6.51	151.1	7.01	156.8
5.02	132.67	5.52	139.1	6.02	145.3	6.52	151.2	7.02	156.9
5.03	132.81	5.53	139.3	6.03	145.4	6.53	151.3	7.03	157.0
5.04	132.94	5.54	139.4	6.04	145.5	6.54	151.4	7.04	157.1
5.05	133.07	5.55	139.5	6.05	145.7	6.55	151.5	7.05	157.2
5.06	133.20	5.56	139.6	6.06	145.8	6.56	151.7	7.06	157.3
5.07	133.33	5.57	139.8	6.07	145.9	6.57	151.8	7.07	157.5
5.08	133.46	5.58	139.9	6.08	146.0	6.58	151.9	7.08	157.6
5.09	133.60	5.59	140.0	6.09	146.1	6.59	152.0	7.09	157.7
5.1	133.73	5.6	140.1	6.1	146.3	6.6	152.1	7.1	157.8
5.11	133.86	5.61	140.3	6.11	146.4	6.61	152.2	7.11	157.9
5.12	133.99	5.62	140.4	6.12	146.5	6.62	152.4	7.12	158.0
5.13	134.12	5.63	140.5	6.13	146.6	6.63	152.5	7.13	158.1
5.14	134.25	5.64	140.6	6.14	146.7	6.64	152.6	7.14	158.2
5.15	134.38	5.65	140.8	6.15	146.8	6.65	152.7	7.15	158.3
5.16	134.51	5.66	140.9	6.16	147.0	6.66	152.8	7.16	158.4
5.17	134.64	5.67	141.0	6.17	147.1	6.67	152.9	7.17	158.6
5.18	134.77	5.68	141.1	6.18	147.2	6.68	153.0	7.18	158.7
5.19	134.90	5.69	141.3	6.19	147.3	6.69	153.2	7.19	158.8
5.2	135.03	5.7	141.4	6.2	147.4	6.7	153.3	7.2	158.9
5.21	135.16	5.71	141.5	6.21	147.6	6.71	153.4	7.21	159.0
5.22	135.29	5.72	141.6	6.22	147.7	6.72	153.5	7.22	159.1
5.23	135.42	5.73	141.7	6.23	147.8	6.73	153.6	7.23	159.2
5.24	135.55	5.74	141.9	6.24	147.9	6.74	153.7	7.24	159.3
5.25	135.68	5.75	142.0	6.25	148.0	6.75	153.8	7.25	159.4
5.26	135.81	5.76	142.1	6.26	148.2	6.76	154.0	7.26	159.6
5.27	135.94	5.77	142.2	6.27	148.3	6.77	154.1	7.27	159.7
5.28	136.07	5.78	142.4	6.28	148.4	6.78	154.2	7.28	159.8
5.29	136.20	5.79	142.5	6.29	148.5	6.79	154.3	7.29	159.9
5.3	136.32	5.8	142.6	6.3	148.6	6.8	154.4	7.3	160.0
5.31	136.45	5.81	142.7	6.31	148.7	6.81	154.5	7.31	160.1
5.32	136.58	5.82	142.9	6.32	148.9	6.82	154.6	7.32	160.2
5.33	136.71	5.83	143.0	6.33	149.0	6.83	154.8	7.33	160.3
5.34	136.84	5.84	143.1	6.34	149.1	6.84	154.9	7.34	160.4
5.35	136.97	5.85	143.2	6.35	149.2	6.85	155.0	7.35	160.5
5.36	137.09	5.86	143.3	6.36	149.3	6.86	155.1	7.36	160.6
5.37	137.22	5.87	143.5	6.37	149.5	6.87	155.2	7.37	160.8
5.38	137.35	5.88	143.6	6.38	149.6	6.88	155.3	7.38	160.9
5.39	137.48	5.89	143.7	6.39	149.7	6.89	155.4	7.39	161.0
5.4	137.60	5.9	143.8	6.4	149.8	6.9	155.5	7.4	161.1
5.41	137.73	5.91	144.0	6.41	149.9	6.91	155.7	7.41	161.2
5.42	137.86	5.92	144.1	6.42	150.0	6.92	155.8	7.42	161.3
5.43	137.99	5.93	144.2	6.43	150.2	6.93	155.9	7.43	161.4
5.44	138.11	5.94	144.3	6.44	150.3	6.94	156.0	7.44	161.5
5.45	138.24	5.95	144.4	6.45	150.4	6.95	156.1	7.45	161.6
5.46	138.37	5.96	144.6	6.46	150.5	6.96	156.2	7.46	161.7
5.47	138.49	5.97	144.7	6.47	150.6	6.97	156.3	7.47	161.8
5.48	138.62	5.98	144.8	6.48	150.7	6.98	156.4	7.48	162.0
5.49	138.75	5.99	144.9	6.49	150.9	6.99	156.6	7.49	162.1
5.5	138.87	6	145.0	6.5	151.0	7	156.7	7.5	162.2

AIR FLOW SCFM IN **2-INCH DIAMETER** (NOMINAL) **SCHED. 40 PVC PIPE** (D=2.067")

Q (SCFM)=128.8xKxDxD(PxdP/(T+460)xSs)E-2 **Using DWYER DS-300 FLOW SENSOR**

K, 2"dia = 0.6 P, psig= 14.7

D, in = 2.1 T, deg. F 60

dP in INCHES OF WATER COLUMN Ss = SPECIFIC GRAVITY AT 60 DEGREES F (AIR = 1.00)

dP	Q	dP	Q	dP	Q	dP	Q	dP	Q
7.51	162.3	8.01	167.6	8.51	172.7	9.01	177.7	9.51	182.6
7.52	162.38	8.02	167.7	8.52	172.8	9.02	177.8	9.52	182.7
7.53	162.49	8.03	167.8	8.53	172.9	9.03	177.9	9.53	182.8
7.54	162.60	8.04	167.9	8.54	173.0	9.04	178.0	9.54	182.9
7.55	162.71	8.05	168.0	8.55	173.1	9.05	178.1	9.55	183.0
7.56	162.82	8.06	168.1	8.56	173.2	9.06	178.2	9.56	183.1
7.57	162.92	8.07	168.2	8.57	173.4	9.07	178.3	9.57	183.2
7.58	163.03	8.08	168.3	8.58	173.5	9.08	178.4	9.58	183.3
7.59	163.14	8.09	168.4	8.59	173.6	9.09	178.5	9.59	183.4
7.6	163.25	8.1	168.5	8.6	173.7	9.1	178.6	9.6	183.5
7.61	163.35	8.11	168.6	8.61	173.8	9.11	178.7	9.61	183.6
7.62	163.46	8.12	168.7	8.62	173.9	9.12	178.8	9.62	183.7
7.63	163.57	8.13	168.8	8.63	174.0	9.13	178.9	9.63	183.8
7.64	163.67	8.14	168.9	8.64	174.1	9.14	179.0	9.64	183.9
7.65	163.78	8.15	169.0	8.65	174.2	9.15	179.1	9.65	183.9
7.66	163.89	8.16	169.2	8.66	174.3	9.16	179.2	9.66	184.0
7.67	164.00	8.17	169.3	8.67	174.4	9.17	179.3	9.67	184.1
7.68	164.10	8.18	169.4	8.68	174.5	9.18	179.4	9.68	184.2
7.69	164.21	8.19	169.5	8.69	174.6	9.19	179.5	9.69	184.3
7.7	164.32	8.2	169.6	8.7	174.7	9.2	179.6	9.7	184.4
7.71	164.42	8.21	169.7	8.71	174.8	9.21	179.7	9.71	184.5
7.72	164.53	8.22	169.8	8.72	174.9	9.22	179.8	9.72	184.6
7.73	164.64	8.23	169.9	8.73	175.0	9.23	179.9	9.73	184.7
7.74	164.74	8.24	170.0	8.74	175.1	9.24	180.0	9.74	184.8
7.75	164.85	8.25	170.1	8.75	175.2	9.25	180.1	9.75	184.9
7.76	164.95	8.26	170.2	8.76	175.3	9.26	180.2	9.76	185.0
7.77	165.06	8.27	170.3	8.77	175.4	9.27	180.3	9.77	185.1
7.78	165.17	8.28	170.4	8.78	175.5	9.28	180.4	9.78	185.2
7.79	165.27	8.29	170.5	8.79	175.6	9.29	180.5	9.79	185.3
7.8	165.38	8.3	170.6	8.8	175.7	9.3	180.6	9.8	185.4
7.81	165.49	8.31	170.7	8.81	175.8	9.31	180.7	9.81	185.5
7.82	165.59	8.32	170.8	8.82	175.9	9.32	180.8	9.82	185.6
7.83	165.70	8.33	170.9	8.83	176.0	9.33	180.9	9.83	185.7
7.84	165.80	8.34	171.0	8.84	176.1	9.34	181.0	9.84	185.8
7.85	165.91	8.35	171.1	8.85	176.2	9.35	181.1	9.85	185.8
7.86	166.01	8.36	171.2	8.86	176.3	9.36	181.2	9.86	185.9
7.87	166.12	8.37	171.3	8.87	176.4	9.37	181.3	9.87	186.0
7.88	166.23	8.38	171.4	8.88	176.5	9.38	181.4	9.88	186.1
7.89	166.33	8.39	171.5	8.89	176.6	9.39	181.5	9.89	186.2
7.9	166.44	8.4	171.6	8.9	176.7	9.4	181.6	9.9	186.3
7.91	166.54	8.41	171.7	8.91	176.8	9.41	181.6	9.91	186.4
7.92	166.65	8.42	171.8	8.92	176.9	9.42	181.7	9.92	186.5
7.93	166.75	8.43	171.9	8.93	177.0	9.43	181.8	9.93	186.6
7.94	166.86	8.44	172.0	8.94	177.1	9.44	181.9	9.94	186.7
7.95	166.96	8.45	172.1	8.95	177.2	9.45	182.0	9.95	186.8
7.96	167.07	8.46	172.2	8.96	177.3	9.46	182.1	9.96	186.9
7.97	167.17	8.47	172.3	8.97	177.3	9.47	182.2	9.97	187.0
7.98	167.28	8.48	172.4	8.98	177.4	9.48	182.3	9.98	187.1
7.99	167.38	8.49	172.5	8.99	177.5	9.49	182.4	9.99	187.2
8	167.49	8.5	172.6	9	177.6	9.5	182.5	10	187.3

AIR FLOW SCFM IN **2-INCH DIAMETER** (NOMINAL) **SCHED. 40 PVC PIPE** (D=2.067")

Q (SCFM)=128.8xKxDxD(PxdP/(T+460)xSs)E-2 **Using DWYER DS-300 FLOW SENSOR**

K, 2"dia.= 0.6 P, psig= 14.7 Flows Not Recommended By Dwyer Inst.

D, in.= 2.1 T, deg. F 60

dP in INCHES OF WATER COLUMN Ss = SPECIFIC GRAVITY AT 60 DEGREES F (AIR = 1.00)

dP	Q	dP	Q	dP	Q	dP	Q	dP	Q
10.1	188.2	15.1	230.1	20.1	265.5	25.1	296.7	30.1	324.9
10.2	189.1	15.2	230.9	20.2	266.1	25.2	297.3	30.2	325.4
10.3	190.0	15.3	231.6	20.3	266.8	25.3	297.8	30.3	326.0
10.4	191.0	15.4	232.4	20.4	267.5	25.4	298.4	30.4	326.5
10.5	191.9	15.5	233.1	20.5	268.1	25.5	299.0	30.5	327.0
10.6	192.8	15.6	233.9	20.6	268.8	25.6	299.6	30.6	327.6
10.7	193.7	15.7	234.6	20.7	269.4	25.7	300.2	30.7	328.1
10.8	194.6	15.8	235.4	20.8	270.1	25.8	300.8	30.8	328.6
10.9	195.5	15.9	236.1	20.9	270.7	25.9	301.4	30.9	329.2
11	196.4	16	236.9	21	271.4	26	301.9	31	329.7
11.1	197.3	16.1	237.6	21.1	272.0	26.1	302.5	31.1	330.2
11.2	198.2	16.2	238.3	21.2	272.6	26.2	303.1	31.2	330.8
11.3	199.1	16.3	239.1	21.3	273.3	26.3	303.7	31.3	331.3
11.4	199.9	16.4	239.8	21.4	273.9	26.4	304.3	31.4	331.8
11.5	200.8	16.5	240.5	21.5	274.6	26.5	304.8	31.5	332.3
11.6	201.7	16.6	241.3	21.6	275.2	26.6	305.4	31.6	332.9
11.7	202.5	16.7	242.0	21.7	275.8	26.7	306.0	31.7	333.4
11.8	203.4	16.8	242.7	21.8	276.5	26.8	306.5	31.8	333.9
11.9	204.3	16.9	243.4	21.9	277.1	26.9	307.1	31.9	334.4
12	205.1	17	244.2	22	277.7	27	307.7	32	335.0
12.1	206.0	17.1	244.9	22.1	278.4	27.1	308.3	32.1	335.5
12.2	206.8	17.2	245.6	22.2	279.0	27.2	308.8	32.2	336.0
12.3	207.7	17.3	246.3	22.3	279.6	27.3	309.4	32.3	336.5
12.4	208.5	17.4	247.0	22.4	280.3	27.4	310.0	32.4	337.1
12.5	209.4	17.5	247.7	22.5	280.9	27.5	310.5	32.5	337.6
12.6	210.2	17.6	248.4	22.6	281.5	27.6	311.1	32.6	338.1
12.7	211.0	17.7	249.1	22.7	282.1	27.7	311.7	32.7	338.6
12.8	211.9	17.8	249.8	22.8	282.7	27.8	312.2	32.8	339.1
12.9	212.7	17.9	250.5	22.9	283.4	27.9	312.8	32.9	339.7
13	213.5	18	251.2	23	284.0	28	313.3	33	340.2
13.1	214.3	18.1	251.9	23.1	284.6	28.1	313.9	33.1	340.7
13.2	215.1	18.2	252.6	23.2	285.2	28.2	314.5	33.2	341.2
13.3	216.0	18.3	253.3	23.3	285.8	28.3	315.0	33.3	341.7
13.4	216.8	18.4	254.0	23.4	286.4	28.4	315.6	33.4	342.2
13.5	217.6	18.5	254.7	23.5	287.1	28.5	316.1	33.5	342.7
13.6	218.4	18.6	255.4	23.6	287.7	28.6	316.7	33.6	343.2
13.7	219.2	18.7	256.1	23.7	288.3	28.7	317.2	33.7	343.8
13.8	220.0	18.8	256.8	23.8	288.9	28.8	317.8	33.8	344.3
13.9	220.8	18.9	257.4	23.9	289.5	28.9	318.3	33.9	344.8
14	221.6	19	258.1	24	290.1	29	318.9	34	345.3
14.1	222.4	19.1	258.8	24.1	290.7	29.1	319.4	34.1	345.8
14.2	223.1	19.2	259.5	24.2	291.3	29.2	320.0	34.2	346.3
14.3	223.9	19.3	260.1	24.3	291.9	29.3	320.5	34.3	346.8
14.4	224.7	19.4	260.8	24.4	292.5	29.4	321.1	34.4	347.3
14.5	225.5	19.5	261.5	24.5	293.1	29.5	321.6	34.5	347.8
14.6	226.3	19.6	262.2	24.6	293.7	29.6	322.2	34.6	348.3
14.7	227.0	19.7	262.8	24.7	294.3	29.7	322.7	34.7	348.8
14.8	227.8	19.8	263.5	24.8	294.9	29.8	323.3	34.8	349.3
14.9	228.6	19.9	264.2	24.9	295.5	29.9	323.8	34.9	349.8
15	229.3	20	264.8	25	296.1	30	324.3	35	350.3

AIR FLOW SCFM IN **2-INCH DIAMETER** (NOMINAL) **SCHED. 40 PVC PIPE** (D=2.067")

Q (SCFM)=128.8xKxDxD(PxdP/(T+460)xSs)E-2 **Using DWYER DS-300 FLOW SENSOR**

K, 2"dia.= 0.6 P, psig= 14.7 Flows Not Recommended By Dwyer Inst.

D, in.= 2.1 T, deg. F 60

dP in INCHES OF WATER COLUMN Ss = SPECIFIC GRAVITY AT 60 DEGREES F (AIR = 1.00)

dP	Q	dP	Q	dP	Q	dP	Q	dP	Q
35.1	350.8	40.1	375.0	45.1	397.7	50.1	419.1	55.1	439.6
35.2	351.3	40.2	375.4	45.2	398.1	50.2	419.6	55.2	440.0
35.3	351.8	40.3	375.9	45.3	398.6	50.3	420.0	55.3	440.3
35.4	352.3	40.4	376.4	45.4	399.0	50.4	420.4	55.4	440.7
35.5	352.8	40.5	376.8	45.5	399.4	50.5	420.8	55.5	441.1
35.6	353.3	40.6	377.3	45.6	399.9	50.6	421.2	55.6	441.5
35.7	353.8	40.7	377.8	45.7	400.3	50.7	421.6	55.7	441.9
35.8	354.3	40.8	378.2	45.8	400.7	50.8	422.1	55.8	442.3
35.9	354.8	40.9	378.7	45.9	401.2	50.9	422.5	55.9	442.7
36	355.3	41	379.2	46	401.6	51	422.9	56	443.1
36.1	355.8	41.1	379.6	46.1	402.1	51.1	423.3	56.1	443.5
36.2	356.3	41.2	380.1	46.2	402.5	51.2	423.7	56.2	443.9
36.3	356.8	41.3	380.5	46.3	402.9	51.3	424.1	56.3	444.3
36.4	357.3	41.4	381.0	46.4	403.4	51.4	424.5	56.4	444.7
36.5	357.8	41.5	381.5	46.5	403.8	51.5	424.9	56.5	445.1
36.6	358.2	41.6	381.9	46.6	404.2	51.6	425.4	56.6	445.5
36.7	358.7	41.7	382.4	46.7	404.7	51.7	425.8	56.7	445.9
36.8	359.2	41.8	382.8	46.8	405.1	51.8	426.2	56.8	446.3
36.9	359.7	41.9	383.3	46.9	405.5	51.9	426.6	56.9	446.7
37	360.2	42	383.8	47	406.0	52	427.0	57	447.1
37.1	360.7	42.1	384.2	47.1	406.4	52.1	427.4	57.1	447.5
37.2	361.2	42.2	384.7	47.2	406.8	52.2	427.8	57.2	447.8
37.3	361.6	42.3	385.1	47.3	407.3	52.3	428.2	57.3	448.2
37.4	362.1	42.4	385.6	47.4	407.7	52.4	428.6	57.4	448.6
37.5	362.6	42.5	386.0	47.5	408.1	52.5	429.1	57.5	449.0
37.6	363.1	42.6	386.5	47.6	408.5	52.6	429.5	57.6	449.4
37.7	363.6	42.7	386.9	47.7	409.0	52.7	429.9	57.7	449.8
37.8	364.1	42.8	387.4	47.8	409.4	52.8	430.3	57.8	450.2
37.9	364.5	42.9	387.8	47.9	409.8	52.9	430.7	57.9	450.6
38	365.0	43	388.3	48	410.3	53	431.1	58	451.0
38.1	365.5	43.1	388.8	48.1	410.7	53.1	431.5	58.1	451.4
38.2	366.0	43.2	389.2	48.2	411.1	53.2	431.9	58.2	451.7
38.3	366.5	43.3	389.7	48.3	411.5	53.3	432.3	58.3	452.1
38.4	366.9	43.4	390.1	48.4	412.0	53.4	432.7	58.4	452.5
38.5	367.4	43.5	390.6	48.5	412.4	53.5	433.1	58.5	452.9
38.6	367.9	43.6	391.0	48.6	412.8	53.6	433.5	58.6	453.3
38.7	368.4	43.7	391.4	48.7	413.2	53.7	433.9	58.7	453.7
38.8	368.8	43.8	391.9	48.8	413.7	53.8	434.3	58.8	454.1
38.9	369.3	43.9	392.3	48.9	414.1	53.9	434.7	58.9	454.5
39	369.8	44	392.8	49	414.5	54	435.1	59	454.8
39.1	370.3	44.1	393.2	49.1	414.9	54.1	435.5	59.1	455.2
39.2	370.7	44.2	393.7	49.2	415.4	54.2	435.9	59.2	455.6
39.3	371.2	44.3	394.1	49.3	415.8	54.3	436.3	59.3	456.0
39.4	371.7	44.4	394.6	49.4	416.2	54.4	436.8	59.4	456.4
39.5	372.2	44.5	395.0	49.5	416.6	54.5	437.2	59.5	456.8
39.6	372.6	44.6	395.5	49.6	417.0	54.6	437.6	59.6	457.1
39.7	373.1	44.7	395.9	49.7	417.5	54.7	438.0	59.7	457.5
39.8	373.6	44.8	396.3	49.8	417.9	54.8	438.4	59.8	457.9
39.9	374.0	44.9	396.8	49.9	418.3	54.9	438.8	59.9	458.3
40	374.5	45	397.2	50	418.7	55	439.2	60	458.7

AIR FLOW SCFM IN **2-INCH DIAMETER** (NOMINAL) **SCHED. 40 PVC PIPE** (D=2 067")

Q (SCFM)=128.8xKxDxD(PxdP/(T+460)xSs)E-2 **Using DWYER DS-300 FLOW SENSOR**

K, 2"dia = 0 6 P, psig= 14.7

D, in = 2 1 T, deg. F 60

dP in INCHES OF WATER COLUMN Ss = SPECIFIC GRAVITY AT 60 DEGREES F (AIR = 1.00)

dP	Q	dP	Q	dP	Q	dP	Q	dP	Q
60.1	459.1	65.1	477 8	70.1	495.8	75.1	513.2	80.1	530.0
60.2	459.4	65.2	478.1	70.2	496.1	75.2	513.5	80.2	530.3
60.3	459.8	65.3	478.5	70.3	496.5	75.3	513.8	80.3	530.6
60.4	460.2	65.4	478.9	70.4	496.8	75.4	514.2	80.4	531.0
60.5	460.6	65.5	479.2	70.5	497.2	75.5	514.5	80.5	531.3
60.6	461.0	65.6	479.6	70.6	497.5	75.6	514.9	80.6	531.6
60.7	461.3	65.7	480.0	70.7	497.9	75.7	515.2	80.7	531.9
60.8	461.7	65.8	480.3	70.8	498.3	75.8	515 5	80 8	532.3
60.9	462.1	65.9	480.7	70.9	498.6	75.9	515.9	80 9	532.6
61	462.5	66	481.1	71	499 0	76	516.2	81	532.9
61.1	462.9	66.1	481.4	71.1	499.3	76.1	516 6	81.1	533.3
61.2	463.2	66.2	481.8	71.2	499.7	76.2	516.9	81.2	533.6
61.3	463.6	66.3	482.2	71.3	500.0	76.3	517.2	81.3	533.9
61.4	464.0	66.4	482.5	71.4	500.4	76.4	517.6	81.4	534.3
61.5	464.4	66.5	482.9	71.5	500.7	76.5	517.9	81.5	534.6
61.6	464.8	66.6	483.2	71.6	501.1	76.6	518.3	81.6	534.9
61.7	465.1	66.7	483.6	71.7	501.4	76.7	518.6	81.7	535.2
61.8	465.5	66.8	484.0	71.8	501.8	76.8	518.9	81.8	535.6
61.9	465.9	66.9	484.3	71.9	502.1	76.9	519.3	81.9	535.9
62	466.3	67	484.7	72	502.5	77	519.6	82	536.2
62.1	466.6	67.1	485.1	72.1	502.8	77.1	519.9	82.1	536.5
62.2	467.0	67.2	485.4	72.2	503.2	77.2	520.3	82.2	536.9
62.3	467.4	67.3	485.8	72.3	503.5	77.3	520.6	82.3	537.2
62.4	467.8	67.4	486.1	72.4	503.9	77.4	521.0	82.4	537.5
62.5	468.1	67.5	486.5	72.5	504.2	77.5	521.3	82.5	537.8
62.6	468.5	67.6	486.9	72.6	504.5	77.6	521.6	82.6	538.2
62.7	468.9	67.7	487.2	72.7	504.9	77.7	522.0	82.7	538.5
62.8	469.3	67.8	487.6	72.8	505.2	77.8	522.3	82.8	538.8
62.9	469.6	67 9	487.9	72.9	505.6	77.9	522.6	82 9	539.2
63	470.0	68	488.3	73	505.9	78	523.0	83	539.5
63.1	470.4	68.1	488.7	73.1	506.3	78.1	523.3	83.1	539.8
63.2	470.8	68.2	489.0	73.2	506.6	78.2	523.6	83.2	540.1
63.3	471.1	68.3	489.4	73.3	507.0	78.3	524.0	83.3	540.5
63.4	471.5	68.4	489.7	73.4	507.3	78.4	524.3	83.4	540.8
63.5	471.9	68.5	490.1	73.5	507.7	78.5	524.6	83.5	541.1
63.6	472.2	68.6	490.5	73.6	508.0	78.6	525.0	83.6	541.4
63.7	472.6	68.7	490.8	73.7	508.4	78.7	525.3	83.7	541.7
63.8	473.0	68.8	491.2	73.8	508.7	78.8	525.7	83.8	542.1
63.9	473.4	68.9	491.5	73.9	509.0	78.9	526.0	83.9	542.4
64	473.7	69	491.9	74	509.4	79	526.3	84	542.7
64.1	474.1	69.1	492.2	74.1	509.7	79.1	526.6	84.1	543.0
64.2	474.5	69.2	492.6	74.2	510.1	79.2	527.0	84.2	543.4
64.3	474.8	69.3	492.9	74.3	510.4	79.3	527.3	84.3	543.7
64.4	475.2	69.4	493.3	74.4	510.8	79.4	527.6	84.4	544.0
64.5	475.6	69.5	493.7	74.5	511.1	79.5	528.0	84.5	544.3
64.6	475.9	69.6	494.0	74.6	511.5	79.6	528.3	84.6	544.7
64.7	476.3	69.7	494.4	74.7	511.8	79.7	528.6	84.7	545.0
64.8	476.7	69.8	494.7	74.8	512.1	79.8	529.0	84.8	545.3
64.9	477.0	69.9	495.1	74.9	512.5	79.9	529.3	84.9	545.6
65	477.4	70	495.4	75	512.8	80	529.6	85	545.9

AIR FLOW SCFM IN **4-INCH DIAMETER** (NOMINAL) SCHED. 40 PVC PIPE (D=4.026")

Q (SCFM)=128.8xKxDxD(PxdP/(T+460)xSs)E-2 **Using DWYER DS-300 FLOW SENSOR**

K, 4"dia.= 0.67 P, psig= 14.7

D, in.= 4.026 T, deg. F 60

dP in INCHES OF WATER COLUMN Ss = SPECIFIC GRAVITY AT 60 DEGREES F (AIR = 1.00)

dP	Q	dP	Q	dP	Q	dP	Q	dP	Q
0.01	23.52	0.51	168.0	1.01	236.4	1.51	289.0	2.01	333.4
0.02	33.26	0.52	169.6	1.02	237.5	1.52	289.9	2.02	334.2
0.03	40.73	0.53	171.2	1.03	238.7	1.53	290.9	2.03	335.1
0.04	47.04	0.54	172.8	1.04	239.8	1.54	291.8	2.04	335.9
0.05	52.59	0.55	174.4	1.05	241.0	1.55	292.8	2.05	336.7
0.06	57.61	0.56	176.0	1.06	242.1	1.56	293.7	2.06	337.5
0.07	62.22	0.57	177.6	1.07	243.3	1.57	294.7	2.07	338.4
0.08	66.52	0.58	179.1	1.08	244.4	1.58	295.6	2.08	339.2
0.09	70.55	0.59	180.6	1.09	245.5	1.59	296.5	2.09	340.0
0.1	74.37	0.6	182.2	1.1	246.7	1.6	297.5	2.1	340.8
0.11	78.00	0.61	183.7	1.11	247.8	1.61	298.4	2.11	341.6
0.12	81.47	0.62	185.2	1.12	248.9	1.62	299.3	2.12	342.4
0.13	84.79	0.63	186.7	1.13	250.0	1.63	300.3	2.13	343.2
0.14	88.00	0.64	188.1	1.14	251.1	1.64	301.2	2.14	344.0
0.15	91.08	0.65	189.6	1.15	252.2	1.65	302.1	2.15	344.8
0.16	94.07	0.66	191.1	1.16	253.3	1.66	303.0	2.16	345.6
0.17	96.97	0.67	192.5	1.17	254.4	1.67	303.9	2.17	346.4
0.18	99.78	0.68	193.9	1.18	255.5	1.68	304.8	2.18	347.2
0.19	102.51	0.69	195.4	1.19	256.5	1.69	305.7	2.19	348.0
0.2	105.17	0.7	196.8	1.2	257.6	1.7	306.6	2.2	348.8
0.21	107.77	0.71	198.2	1.21	258.7	1.71	307.5	2.21	349.6
0.22	110.31	0.72	199.6	1.22	259.8	1.72	308.4	2.22	350.4
0.23	112.79	0.73	200.9	1.23	260.8	1.73	309.3	2.23	351.2
0.24	115.21	0.74	202.3	1.24	261.9	1.74	310.2	2.24	352.0
0.25	117.59	0.75	203.7	1.25	262.9	1.75	311.1	2.25	352.8
0.26	119.92	0.76	205.0	1.26	264.0	1.76	312.0	2.26	353.5
0.27	122.20	0.77	206.4	1.27	265.0	1.77	312.9	2.27	354.3
0.28	124.44	0.78	207.7	1.28	266.1	1.78	313.8	2.28	355.1
0.29	126.65	0.79	209.0	1.29	267.1	1.79	314.6	2.29	355.9
0.3	128.81	0.8	210.3	1.3	268.1	1.8	315.5	2.3	356.7
0.31	130.94	0.81	211.7	1.31	269.2	1.81	316.4	2.31	357.4
0.32	133.04	0.82	213.0	1.32	270.2	1.82	317.3	2.32	358.2
0.33	135.10	0.83	214.3	1.33	271.2	1.83	318.1	2.33	359.0
0.34	137.13	0.84	215.5	1.34	272.2	1.84	319.0	2.34	359.8
0.35	139.13	0.85	216.8	1.35	273.3	1.85	319.9	2.35	360.5
0.36	141.11	0.86	218.1	1.36	274.3	1.86	320.7	2.36	361.3
0.37	143.05	0.87	219.4	1.37	275.3	1.87	321.6	2.37	362.1
0.38	144.97	0.88	220.6	1.38	276.3	1.88	322.5	2.38	362.8
0.39	146.87	0.89	221.9	1.39	277.3	1.89	323.3	2.39	363.6
0.4	148.74	0.9	223.1	1.4	278.3	1.9	324.2	2.4	364.3
0.41	150.59	0.91	224.3	1.41	279.3	1.91	325.0	2.41	365.1
0.42	152.41	0.92	225.6	1.42	280.2	1.92	325.9	2.42	365.8
0.43	154.22	0.93	226.8	1.43	281.2	1.93	326.7	2.43	366.6
0.44	156.00	0.94	228.0	1.44	282.2	1.94	327.6	2.44	367.4
0.45	157.76	0.95	229.2	1.45	283.2	1.95	328.4	2.45	368.1
0.46	159.50	0.96	230.4	1.46	284.2	1.96	329.2	2.46	368.9
0.47	161.23	0.97	231.6	1.47	285.1	1.97	330.1	2.47	369.6
0.48	162.94	0.98	232.8	1.48	286.1	1.98	330.9	2.48	370.4
0.49	164.62	0.99	234.0	1.49	287.1	1.99	331.8	2.49	371.1
0.5	166.30	1	235.2	1.5	288.0	2	332.6	2.5	371.8

AIR FLOW SCFM IN 4-INCH DIAMETER (NOMINAL) SCHED. 40 PVC PIPE (D=4.026")

Q (SCFM)=128.8xKxDxD(PxdP/(T+460)xSs)E-2 **Using DWYER DS-300 FLOW SENSOR**

K, 4"dia.= 0.67 P, psig= 14.7

D, in.= 4.026 T, deg. F 60

dP in INCHES OF WATER COLUMN Ss = SPECIFIC GRAVITY AT 60 DEGREES F (AIR = 1.00)

dP	Q	dP	Q	dP	Q	dP	Q	dP	Q
2.51	372.6	3.01	408.0	3.51	440.6	4.01	470.9	4.51	499.4
2.52	373.3	3.02	408.7	3.52	441.2	4.02	471.5	4.52	500.0
2.53	374.1	3.03	409.4	3.53	441.9	4.03	472.1	4.53	500.5
2.54	374.8	3.04	410.0	3.54	442.5	4.04	472.7	4.54	501.1
2.55	375.5	3.05	410.7	3.55	443.1	4.05	473.3	4.55	501.7
2.56	376.3	3.06	411.4	3.56	443.7	4.06	473.9	4.56	502.2
2.57	377.0	3.07	412.1	3.57	444.4	4.07	474.5	4.57	502.8
2.58	377.8	3.08	412.7	3.58	445.0	4.08	475.0	4.58	503.3
2.59	378.5	3.09	413.4	3.59	445.6	4.09	475.6	4.59	503.9
2.6	379.2	3.1	414.1	3.6	446.2	4.1	476.2	4.6	504.4
2.61	379.9	3.11	414.7	3.61	446.8	4.11	476.8	4.61	504.9
2.62	380.7	3.12	415.4	3.62	447.5	4.12	477.4	4.62	505.5
2.63	381.4	3.13	416.1	3.63	448.1	4.13	477.9	4.63	506.0
2.64	382.1	3.14	416.7	3.64	448.7	4.14	478.5	4.64	506.6
2.65	382.8	3.15	417.4	3.65	449.3	4.15	479.1	4.65	507.1
2.66	383.6	3.16	418.1	3.66	449.9	4.16	479.7	4.66	507.7
2.67	384.3	3.17	418.7	3.67	450.5	4.17	480.2	4.67	508.2
2.68	385.0	3.18	419.4	3.68	451.1	4.18	480.8	4.68	508.8
2.69	385.7	3.19	420.0	3.69	451.8	4.19	481.4	4.69	509.3
2.7	386.4	3.2	420.7	3.7	452.4	4.2	482.0	4.7	509.9
2.71	387.2	3.21	421.4	3.71	453.0	4.21	482.5	4.71	510.4
2.72	387.9	3.22	422.0	3.72	453.6	4.22	483.1	4.72	510.9
2.73	388.6	3.23	422.7	3.73	454.2	4.23	483.7	4.73	511.5
2.74	389.3	3.24	423.3	3.74	454.8	4.24	484.3	4.74	512.0
2.75	390.0	3.25	424.0	3.75	455.4	4.25	484.8	4.75	512.6
2.76	390.7	3.26	424.6	3.76	456.0	4.26	485.4	4.76	513.1
2.77	391.4	3.27	425.3	3.77	456.6	4.27	486.0	4.77	513.6
2.78	392.1	3.28	425.9	3.78	457.2	4.28	486.5	4.78	514.2
2.79	392.8	3.29	426.6	3.79	457.8	4.29	487.1	4.79	514.7
2.8	393.5	3.3	427.2	3.8	458.4	4.3	487.7	4.8	515.2
2.81	394.2	3.31	427.9	3.81	459.0	4.31	488.2	4.81	515.8
2.82	394.9	3.32	428.5	3.82	459.6	4.32	488.8	4.82	516.3
2.83	395.6	3.33	429.2	3.83	460.3	4.33	489.4	4.83	516.9
2.84	396.3	3.34	429.8	3.84	460.9	4.34	489.9	4.84	517.4
2.85	397.0	3.35	430.4	3.85	461.5	4.35	490.5	4.85	517.9
2.86	397.7	3.36	431.1	3.86	462.0	4.36	491.1	4.86	518.5
2.87	398.4	3.37	431.7	3.87	462.6	4.37	491.6	4.87	519.0
2.88	399.1	3.38	432.4	3.88	463.2	4.38	492.2	4.88	519.5
2.89	399.8	3.39	433.0	3.89	463.8	4.39	492.8	4.89	520.1
2.9	400.5	3.4	433.6	3.9	464.4	4.4	493.3	4.9	520.6
2.91	401.2	3.41	434.3	3.91	465.0	4.41	493.9	4.91	521.1
2.92	401.9	3.42	434.9	3.92	465.6	4.42	494.4	4.92	521.6
2.93	402.6	3.43	435.6	3.93	466.2	4.43	495.0	4.93	522.2
2.94	403.2	3.44	436.2	3.94	466.8	4.44	495.5	4.94	522.7
2.95	403.9	3.45	436.8	3.95	467.4	4.45	496.1	4.95	523.2
2.96	404.6	3.46	437.5	3.96	468.0	4.46	496.7	4.96	523.8
2.97	405.3	3.47	438.1	3.97	468.6	4.47	497.2	4.97	524.3
2.98	406.0	3.48	438.7	3.98	469.2	4.48	497.8	4.98	524.8
2.99	406.7	3.49	439.3	3.99	469.8	4.49	498.3	4.99	525.3
3	407.3	3.5	440.0	4	470.4	4.5	498.9	5	525.9

AIR FLOW SCFM IN 4-INCH DIAMETER (NOMINAL) SCHED. 40 PVC PIPE (D=4.026")

Q (SCFM)=128.8xKxDxD(PxdP/(T+460)xSs)E-2 **Using DWYER DS-300 FLOW SENSOR**

K, 4"dia.= 0.67 P, psig= 14.7

D, in.= 4.026 T, deg. F 60

dP in INCHES OF WATER COLUMN Ss = SPECIFIC GRAVITY AT 60 DEGREES F (AIR = 1.00)

dP	Q	dP	Q	dP	Q	dP	Q	dP	Q
5.01	526.4	5.51	552.0	6.01	576.5	6.51	600.0	7.01	622.7
5.02	526.9	5.52	552.5	6.02	577.0	6.52	600.5	7.02	623.1
5.03	527.4	5.53	553.0	6.03	577.5	6.53	601.0	7.03	623.6
5.04	528.0	5.54	553.5	6.04	578.0	6.54	601.4	7.04	624.0
5.05	528.5	5.55	554.0	6.05	578.5	6.55	601.9	7.05	624.4
5.06	529.0	5.56	554.5	6.06	578.9	6.56	602.3	7.06	624.9
5.07	529.5	5.57	555.0	6.07	579.4	6.57	602.8	7.07	625.3
5.08	530.1	5.58	555.5	6.08	579.9	6.58	603.3	7.08	625.8
5.09	530.6	5.59	556.0	6.09	580.4	6.59	603.7	7.09	626.2
5.1	531.1	5.6	556.5	6.1	580.8	6.6	604.2	7.1	626.6
5.11	531.6	5.61	557.0	6.11	581.3	6.61	604.6	7.11	627.1
5.12	532.1	5.62	557.5	6.12	581.8	6.62	605.1	7.12	627.5
5.13	532.7	5.63	558.0	6.13	582.3	6.63	605.6	7.13	628.0
5.14	533.2	5.64	558.5	6.14	582.7	6.64	606.0	7.14	628.4
5.15	533.7	5.65	559.0	6.15	583.2	6.65	606.5	7.15	628.9
5.16	534.2	5.66	559.5	6.16	583.7	6.66	606.9	7.16	629.3
5.17	534.7	5.67	560.0	6.17	584.2	6.67	607.4	7.17	629.7
5.18	535.3	5.68	560.5	6.18	584.6	6.68	607.8	7.18	630.2
5.19	535.8	5.69	561.0	6.19	585.1	6.69	608.3	7.19	630.6
5.2	536.3	5.7	561.5	6.2	585.6	6.7	608.7	7.2	631.0
5.21	536.8	5.71	562.0	6.21	586.1	6.71	609.2	7.21	631.5
5.22	537.3	5.72	562.5	6.22	586.5	6.72	609.6	7.22	631.9
5.23	537.8	5.73	563.0	6.23	587.0	6.73	610.1	7.23	632.4
5.24	538.3	5.74	563.4	6.24	587.5	6.74	610.6	7.24	632.8
5.25	538.9	5.75	563.9	6.25	587.9	6.75	611.0	7.25	633.2
5.26	539.4	5.76	564.4	6.26	588.4	6.76	611.5	7.26	633.7
5.27	539.9	5.77	564.9	6.27	588.9	6.77	611.9	7.27	634.1
5.28	540.4	5.78	565.4	6.28	589.4	6.78	612.4	7.28	634.5
5.29	540.9	5.79	565.9	6.29	589.8	6.79	612.8	7.29	635.0
5.3	541.4	5.8	566.4	6.3	590.3	6.8	613.3	7.3	635.4
5.31	541.9	5.81	566.9	6.31	590.8	6.81	613.7	7.31	635.8
5.32	542.4	5.82	567.4	6.32	591.2	6.82	614.2	7.32	636.3
5.33	542.9	5.83	567.8	6.33	591.7	6.83	614.6	7.33	636.7
5.34	543.5	5.84	568.3	6.34	592.2	6.84	615.1	7.34	637.2
5.35	544.0	5.85	568.8	6.35	592.6	6.85	615.5	7.35	637.6
5.36	544.5	5.86	569.3	6.36	593.1	6.86	616.0	7.36	638.0
5.37	545.0	5.87	569.8	6.37	593.6	6.87	616.4	7.37	638.5
5.38	545.5	5.88	570.3	6.38	594.0	6.88	616.9	7.38	638.9
5.39	546.0	5.89	570.8	6.39	594.5	6.89	617.3	7.39	639.3
5.4	546.5	5.9	571.2	6.4	595.0	6.9	617.8	7.4	639.8
5.41	547.0	5.91	571.7	6.41	595.4	6.91	618.2	7.41	640.2
5.42	547.5	5.92	572.2	6.42	595.9	6.92	618.7	7.42	640.6
5.43	548.0	5.93	572.7	6.43	596.3	6.93	619.1	7.43	641.0
5.44	548.5	5.94	573.2	6.44	596.8	6.94	619.5	7.44	641.5
5.45	549.0	5.95	573.7	6.45	597.3	6.95	620.0	7.45	641.9
5.46	549.5	5.96	574.1	6.46	597.7	6.96	620.4	7.46	642.3
5.47	550.0	5.97	574.6	6.47	598.2	6.97	620.9	7.47	642.8
5.48	550.5	5.98	575.1	6.48	598.7	6.98	621.3	7.48	643.2
5.49	551.0	5.99	575.6	6.49	599.1	6.99	621.8	7.49	643.6
5.5	551.5	6	576.1	6.5	599.6	7	622.2	7.5	644.1

AIR FLOW SCFM IN 4-INCH DIAMETER (NOMINAL) SCHED. 40 PVC PIPE (D=4.026")

Q (SCFM)=128.8xKxDxD(PxdP/(T+460)xSs)E-2 **Using DWYER DS-300 FLOW SENSOR**

K, 4"dia.= 0.67 P, psig= 14.7

D, in.= 4.026 T, deg. F 60

dP in INCHES OF WATER COLUMN Ss = SPECIFIC GRAVITY AT 60 DEGREES F (AIR = 1.00)

dP	Q	dP	Q	dP	Q	dP	Q	dP	Q
7.51	644.5	8.01	665.6	8.51	686.1	9.01	705.9	9.51	725.2
7.52	644.9	8.02	666.0	8.52	686.5	9.02	706.3	9.52	725.6
7.53	645.3	8.03	666.4	8.53	686.9	9.03	706.7	9.53	726.0
7.54	645.8	8.04	666.8	8.54	687.3	9.04	707.1	9.54	726.4
7.55	646.2	8.05	667.3	8.55	687.7	9.05	707.5	9.55	726.8
7.56	646.6	8.06	667.7	8.56	688.1	9.06	707.9	9.56	727.2
7.57	647.1	8.07	668.1	8.57	688.5	9.07	708.3	9.57	727.5
7.58	647.5	8.08	668.5	8.58	688.9	9.08	708.7	9.58	727.9
7.59	647.9	8.09	668.9	8.59	689.3	9.09	709.1	9.59	728.3
7.6	648.3	8.1	669.3	8.6	689.7	9.1	709.4	9.6	728.7
7.61	648.8	8.11	669.7	8.61	690.1	9.11	709.8	9.61	729.0
7.62	649.2	8.12	670.2	8.62	690.5	9.12	710.2	9.62	729.4
7.63	649.6	8.13	670.6	8.63	690.9	9.13	710.6	9.63	729.8
7.64	650.0	8.14	671.0	8.64	691.3	9.14	711.0	9.64	730.2
7.65	650.5	8.15	671.4	8.65	691.7	9.15	711.4	9.65	730.6
7.66	650.9	8.16	671.8	8.66	692.1	9.16	711.8	9.66	730.9
7.67	651.3	8.17	672.2	8.67	692.5	9.17	712.2	9.67	731.3
7.68	651.7	8.18	672.6	8.68	692.9	9.18	712.6	9.68	731.7
7.69	652.2	8.19	673.0	8.69	693.3	9.19	712.9	9.69	732.1
7.7	652.6	8.2	673.4	8.7	693.7	9.2	713.3	9.7	732.5
7.71	653.0	8.21	673.9	8.71	694.1	9.21	713.7	9.71	732.8
7.72	653.4	8.22	674.3	8.72	694.5	9.22	714.1	9.72	733.2
7.73	653.9	8.23	674.7	8.73	694.9	9.23	714.5	9.73	733.6
7.74	654.3	8.24	675.1	8.74	695.3	9.24	714.9	9.74	734.0
7.75	654.7	8.25	675.5	8.75	695.7	9.25	715.3	9.75	734.3
7.76	655.1	8.26	675.9	8.76	696.1	9.26	715.7	9.76	734.7
7.77	655.5	8.27	676.3	8.77	696.5	9.27	716.0	9.77	735.1
7.78	656.0	8.28	676.7	8.78	696.9	9.28	716.4	9.78	735.5
7.79	656.4	8.29	677.1	8.79	697.3	9.29	716.8	9.79	735.8
7.8	656.8	8.3	677.5	8.8	697.6	9.3	717.2	9.8	736.2
7.81	657.2	8.31	677.9	8.81	698.0	9.31	717.6	9.81	736.6
7.82	657.7	8.32	678.4	8.82	698.4	9.32	718.0	9.82	737.0
7.83	658.1	8.33	678.8	8.83	698.8	9.33	718.3	9.83	737.3
7.84	658.5	8.34	679.2	8.84	699.2	9.34	718.7	9.84	737.7
7.85	658.9	8.35	679.6	8.85	699.6	9.35	719.1	9.85	738.1
7.86	659.3	8.36	680.0	8.86	700.0	9.36	719.5	9.86	738.5
7.87	659.8	8.37	680.4	8.87	700.4	9.37	719.9	9.87	738.8
7.88	660.2	8.38	680.8	8.88	700.8	9.38	720.3	9.88	739.2
7.89	660.6	8.39	681.2	8.89	701.2	9.39	720.7	9.89	739.6
7.9	661.0	8.4	681.6	8.9	701.6	9.4	721.0	9.9	740.0
7.91	661.4	8.41	682.0	8.91	702.0	9.41	721.4	9.91	740.3
7.92	661.8	8.42	682.4	8.92	702.4	9.42	721.8	9.92	740.7
7.93	662.3	8.43	682.8	8.93	702.8	9.43	722.2	9.93	741.1
7.94	662.7	8.44	683.2	8.94	703.2	9.44	722.6	9.94	741.5
7.95	663.1	8.45	683.6	8.95	703.6	9.45	723.0	9.95	741.8
7.96	663.5	8.46	684.0	8.96	704.0	9.46	723.3	9.96	742.2
7.97	663.9	8.47	684.4	8.97	704.4	9.47	723.7	9.97	742.6
7.98	664.3	8.48	684.8	8.98	704.7	9.48	724.1	9.98	743.0
7.99	664.8	8.49	685.3	8.99	705.1	9.49	724.5	9.99	743.3
8	665.2	8.5	685.7	9	705.5	9.5	724.9	10	743.7

AIR FLOW SCFM IN 4-INCH DIAMETER (NOMINAL) SCHED. 40 PVC PIPE (D=4.026")

Q (SCFM)=128.8xKxDxD(PxdP/(T+460)xSs)E-2 **Using DWYER DS-300 FLOW SENSOR**

K, 4"dia.= 0.67 P, psig= 14.7

D, in.= 4.026 T, deg. F 60

dP in INCHES OF WATER COLUMN Ss = SPECIFIC GRAVITY AT 60 DEGREES F (AIR = 1.00)

dP	Q	dP	Q	dP	Q	dP	Q	dP	Q
10.1	747.4	15.1	913.9	20.1	1054.4	25.1	1178.2	30.1	1290.3
10.2	751.1	15.2	916.9	20.2	1057.0	25.2	1180.6	30.2	1292.4
10.3	754.8	15.3	919.9	20.3	1059.6	25.3	1182.9	30.3	1294.5
10.4	758.4	15.4	922.9	20.4	1062.2	25.4	1185.3	30.4	1296.7
10.5	762.1	15.5	925.9	20.5	1064.8	25.5	1187.6	30.5	1298.8
10.6	765.7	15.6	928.9	20.6	1067.4	25.6	1189.9	30.6	1300.9
10.7	769.3	15.7	931.8	20.7	1070.0	25.7	1192.2	30.7	1303.1
10.8	772.9	15.8	934.8	20.8	1072.6	25.8	1194.6	30.8	1305.2
10.9	776.4	15.9	937.8	20.9	1075.1	25.9	1196.9	30.9	1307.3
11	780.0	16	940.7	21	1077.7	26	1199.2	31	1309.4
11.1	783.5	16.1	943.6	21.1	1080.3	26.1	1201.5	31.1	1311.5
11.2	787.1	16.2	946.6	21.2	1082.8	26.2	1203.8	31.2	1313.6
11.3	790.6	16.3	949.5	21.3	1085.4	26.3	1206.1	31.3	1315.7
11.4	794.0	16.4	952.4	21.4	1087.9	26.4	1208.4	31.4	1317.8
11.5	797.5	16.5	955.3	21.5	1090.5	26.5	1210.6	31.5	1319.9
11.6	801.0	16.6	958.2	21.6	1093.0	26.6	1212.9	31.6	1322.0
11.7	804.4	16.7	961.1	21.7	1095.5	26.7	1215.2	31.7	1324.1
11.8	807.9	16.8	963.9	21.8	1098.1	26.8	1217.5	31.8	1326.2
11.9	811.3	16.9	966.8	21.9	1100.6	26.9	1219.8	31.9	1328.3
12	814.7	17	969.7	22	1103.1	27	1222.0	32	1330.4
12.1	818.1	17.1	972.5	22.1	1105.6	27.1	1224.3	32.1	1332.4
12.2	821.4	17.2	975.3	22.2	1108.1	27.2	1226.5	32.2	1334.5
12.3	824.8	17.3	978.2	22.3	1110.6	27.3	1228.8	32.3	1336.6
12.4	828.1	17.4	981.0	22.4	1113.1	27.4	1231.0	32.4	1338.7
12.5	831.5	17.5	983.8	22.5	1115.5	27.5	1233.3	32.5	1340.7
12.6	834.8	17.6	986.6	22.6	1118.0	27.6	1235.5	32.6	1342.8
12.7	838.1	17.7	989.4	22.7	1120.5	27.7	1237.8	32.7	1344.8
12.8	841.4	17.8	992.2	22.8	1123.0	27.8	1240.0	32.8	1346.9
12.9	844.7	17.9	995.0	22.9	1125.4	27.9	1242.2	32.9	1348.9
13	847.9	18	997.8	23	1127.9	28	1244.4	33	1351.0
13.1	851.2	18.1	1000.5	23.1	1130.3	28.1	1246.7	33.1	1353.0
13.2	854.4	18.2	1003.3	23.2	1132.8	28.2	1248.9	33.2	1355.1
13.3	857.7	18.3	1006.1	23.3	1135.2	28.3	1251.1	33.3	1357.1
13.4	860.9	18.4	1008.8	23.4	1137.6	28.4	1253.3	33.4	1359.2
13.5	864.1	18.5	1011.5	23.5	1140.1	28.5	1255.5	33.5	1361.2
13.6	867.3	18.6	1014.3	23.6	1142.5	28.6	1257.7	33.6	1363.2
13.7	870.5	18.7	1017.0	23.7	1144.9	28.7	1259.9	33.7	1365.2
13.8	873.6	18.8	1019.7	23.8	1147.3	28.8	1262.1	33.8	1367.3
13.9	876.8	18.9	1022.4	23.9	1149.7	28.9	1264.3	33.9	1369.3
14	880.0	19	1025.1	24	1152.1	29	1266.5	34	1371.3
14.1	883.1	19.1	1027.8	24.1	1154.5	29.1	1268.6	34.1	1373.3
14.2	886.2	19.2	1030.5	24.2	1156.9	29.2	1270.8	34.2	1375.3
14.3	889.3	19.3	1033.2	24.3	1159.3	29.3	1273.0	34.3	1377.3
14.4	892.4	19.4	1035.8	24.4	1161.7	29.4	1275.2	34.4	1379.3
14.5	895.5	19.5	1038.5	24.5	1164.1	29.5	1277.3	34.5	1381.4
14.6	898.6	19.6	1041.2	24.6	1166.4	29.6	1279.5	34.6	1383.4
14.7	901.7	19.7	1043.8	24.7	1168.8	29.7	1281.7	34.7	1385.4
14.8	904.7	19.8	1046.5	24.8	1171.2	29.8	1283.8	34.8	1387.3
14.9	907.8	19.9	1049.1	24.9	1173.5	29.9	1286.0	34.9	1389.3
15	910.8	20	1051.7	25	1175.9	30	1288.1	35	1391.3

VELOCITY F/M IN **4-INCH DIAMETER** (NOMINAL) SCHED. 40 PVC PIPE (D=4.026")

Q (SCFM)=128.8xKxDxD(PxdP/(T+460)xSs)E-2 **Using DWYER DS-300 FLOW SENSOR**

K, 4"dia.= 0.67 P, psig= 14.7 V (ft/min)= Q/(DxDx3.14159/4)

D, in.= 4.026 T, deg. F 60

dP in INCHES OF WATER COLUMN Ss = SPECIFIC GRAVITY AT 60 DEGREES F (AIR = 1.00)

dP	V	dP	V	dP	V	dP	V	dP	V
0.01	266.02	0.51	1899.79	1.01	2673.51	1.51	3268.96	2.01	3771.54
0.02	376.21	0.52	1918.33	1.02	2686.71	1.52	3279.76	2.02	3780.91
0.03	460.77	0.53	1936.68	1.03	2699.85	1.53	3290.53	2.03	3790.26
0.04	532.05	0.54	1954.87	1.04	2712.92	1.54	3301.27	2.04	3799.58
0.05	594.85	0.55	1972.89	1.05	2725.93	1.55	3311.97	2.05	3808.88
0.06	651.62	0.56	1990.74	1.06	2738.88	1.56	3322.64	2.06	3818.16
0.07	703.83	0.57	2008.44	1.07	2751.77	1.57	3333.27	2.07	3827.42
0.08	752.43	0.58	2025.98	1.08	2764.60	1.58	3343.87	2.08	3836.65
0.09	798.07	0.59	2043.37	1.09	2777.37	1.59	3354.43	2.09	3845.86
0.1	841.24	0.6	2060.61	1.1	2790.08	1.6	3364.97	2.1	3855.05
0.11	882.30	0.61	2077.71	1.11	2802.74	1.61	3375.46	2.11	3864.22
0.12	921.53	0.62	2094.67	1.12	2815.33	1.62	3385.93	2.12	3873.37
0.13	959.16	0.63	2111.50	1.13	2827.87	1.63	3396.37	2.13	3882.49
0.14	995.37	0.64	2128.19	1.14	2840.36	1.64	3406.77	2.14	3891.59
0.15	1030.31	0.65	2144.75	1.15	2852.79	1.65	3417.14	2.15	3900.68
0.16	1064.10	0.66	2161.19	1.16	2865.16	1.66	3427.48	2.16	3909.74
0.17	1096.84	0.67	2177.50	1.17	2877.49	1.67	3437.79	2.17	3918.78
0.18	1128.64	0.68	2193.69	1.18	2889.76	1.68	3448.06	2.18	3927.80
0.19	1159.57	0.69	2209.76	1.19	2901.98	1.69	3458.31	2.19	3936.79
0.2	1189.70	0.7	2225.72	1.2	2914.15	1.7	3468.53	2.2	3945.77
0.21	1219.07	0.71	2241.56	1.21	2926.26	1.71	3478.71	2.21	3954.73
0.22	1247.76	0.72	2257.29	1.22	2938.33	1.72	3488.87	2.22	3963.67
0.23	1275.81	0.73	2272.91	1.23	2950.35	1.73	3499.00	2.23	3972.58
0.24	1303.25	0.74	2288.42	1.24	2962.32	1.74	3509.10	2.24	3981.48
0.25	1330.12	0.75	2303.83	1.25	2974.24	1.75	3519.17	2.25	3990.36
0.26	1356.46	0.76	2319.14	1.26	2986.11	1.76	3529.21	2.26	3999.22
0.27	1382.30	0.77	2334.35	1.27	2997.94	1.77	3539.22	2.27	4008.05
0.28	1407.67	0.78	2349.46	1.28	3009.72	1.78	3549.20	2.28	4016.87
0.29	1432.58	0.79	2364.47	1.29	3021.45	1.79	3559.16	2.29	4025.67
0.3	1457.07	0.8	2379.39	1.3	3033.14	1.8	3569.09	2.3	4034.45
0.31	1481.16	0.81	2394.22	1.31	3044.78	1.81	3578.99	2.31	4043.21
0.32	1504.86	0.82	2408.95	1.32	3056.38	1.82	3588.86	2.32	4051.96
0.33	1528.19	0.83	2423.59	1.33	3067.94	1.83	3598.70	2.33	4060.68
0.34	1551.17	0.84	2438.15	1.34	3079.45	1.84	3608.52	2.34	4069.38
0.35	1573.82	0.85	2452.62	1.35	3090.92	1.85	3618.32	2.35	4078.07
0.36	1596.14	0.86	2467.00	1.36	3102.35	1.86	3628.08	2.36	4086.74
0.37	1618.16	0.87	2481.31	1.37	3113.73	1.87	3637.82	2.37	4095.39
0.38	1639.88	0.88	2495.53	1.38	3125.07	1.88	3647.54	2.38	4104.02
0.39	1661.32	0.89	2509.66	1.39	3136.38	1.89	3657.22	2.39	4112.63
0.4	1682.48	0.9	2523.72	1.4	3147.64	1.9	3666.89	2.4	4121.22
0.41	1703.38	0.91	2537.71	1.41	3158.86	1.91	3676.52	2.41	4129.80
0.42	1724.03	0.92	2551.61	1.42	3170.04	1.92	3686.14	2.42	4138.36
0.43	1744.44	0.93	2565.44	1.43	3181.18	1.93	3695.72	2.43	4146.90
0.44	1764.60	0.94	2579.20	1.44	3192.29	1.94	3705.28	2.44	4155.43
0.45	1784.54	0.95	2592.88	1.45	3203.35	1.95	3714.82	2.45	4163.93
0.46	1804.26	0.96	2606.49	1.46	3214.38	1.96	3724.33	2.46	4172.42
0.47	1823.77	0.97	2620.03	1.47	3225.37	1.97	3733.82	2.47	4180.89
0.48	1843.07	0.98	2633.50	1.48	3236.32	1.98	3743.29	2.48	4189.35
0.49	1862.17	0.99	2646.90	1.49	3247.24	1.99	3752.73	2.49	4197.79
0.5	1881.07	1	2660.24	1.5	3258.11	2	3762.15	2.5	4206.21

VELOCITY F/M IN 4-INCH DIAMETER (NOMINAL) SCHED. 40 PVC PIPE (D=4.026")

Q (SCFM)=128.8xKxDxD(PxdP/(T+460)xSs)E-2 **Using DWYER DS-300 FLOW SENSOR**

K, 4"dia.= 0.67 P, psig= 14.7 V (ft/min)= Q/(DxDx3.14159/4)

D, in.= 4.026 T, deg. F 60

dP in INCHES OF WATER COLUMN Ss = SPECIFIC GRAVITY AT 60 DEGREES F (AIR = 1.00)

dP	V	dP	V	dP	V	dP	V	dP	V
2.51	4214.61	3.01	4615.34	3.51	4983.96	4.01	5327.12	4.51	5649.49
2.52	4223.00	3.02	4623.00	3.52	4991.05	4.02	5333.76	4.52	5655.75
2.53	4231.37	3.03	4630.65	3.53	4998.14	4.03	5340.39	4.53	5662.00
2.54	4239.72	3.04	4638.29	3.54	5005.21	4.04	5347.01	4.54	5668.24
2.55	4248.06	3.05	4645.91	3.55	5012.27	4.05	5353.63	4.55	5674.48
2.56	4256.38	3.06	4653.52	3.56	5019.33	4.06	5360.23	4.56	5680.72
2.57	4264.69	3.07	4661.12	3.57	5026.37	4.07	5366.83	4.57	5686.94
2.58	4272.98	3.08	4668.70	3.58	5033.41	4.08	5373.42	4.58	5693.16
2.59	4281.25	3.09	4676.27	3.59	5040.43	4.09	5380.00	4.59	5699.37
2.6	4289.51	3.1	4683.83	3.6	5047.45	4.1	5386.57	4.6	5705.58
2.61	4297.75	3.11	4691.38	3.61	5054.45	4.11	5393.14	4.61	5711.78
2.62	4305.97	3.12	4698.92	3.62	5061.45	4.12	5399.70	4.62	5717.97
2.63	4314.18	3.13	4706.44	3.63	5068.44	4.13	5406.24	4.63	5724.15
2.64	4322.38	3.14	4713.96	3.64	5075.41	4.14	5412.79	4.64	5730.33
2.65	4330.56	3.15	4721.46	3.65	5082.38	4.15	5419.32	4.65	5736.50
2.66	4338.72	3.16	4728.94	3.66	5089.34	4.16	5425.84	4.66	5742.67
2.67	4346.87	3.17	4736.42	3.67	5096.28	4.17	5432.36	4.67	5748.82
2.68	4355.00	3.18	4743.89	3.68	5103.22	4.18	5438.87	4.68	5754.98
2.69	4363.12	3.19	4751.34	3.69	5110.15	4.19	5445.37	4.69	5761.12
2.7	4371.22	3.2	4758.78	3.7	5117.07	4.2	5451.87	4.7	5767.26
2.71	4379.31	3.21	4766.21	3.71	5123.98	4.21	5458.35	4.71	5773.39
2.72	4387.38	3.22	4773.63	3.72	5130.88	4.22	5464.83	4.72	5779.52
2.73	4395.44	3.23	4781.03	3.73	5137.77	4.23	5471.30	4.73	5785.64
2.74	4403.48	3.24	4788.43	3.74	5144.66	4.24	5477.77	4.74	5791.75
2.75	4411.51	3.25	4795.81	3.75	5151.53	4.25	5484.22	4.75	5797.86
2.76	4419.52	3.26	4803.19	3.76	5158.39	4.26	5490.67	4.76	5803.96
2.77	4427.52	3.27	4810.55	3.77	5165.25	4.27	5497.11	4.77	5810.05
2.78	4435.50	3.28	4817.90	3.78	5172.10	4.28	5503.55	4.78	5816.14
2.79	4443.47	3.29	4825.24	3.79	5178.93	4.29	5509.97	4.79	5822.22
2.8	4451.43	3.3	4832.56	3.8	5185.76	4.3	5516.39	4.8	5828.29
2.81	4459.37	3.31	4839.88	3.81	5192.58	4.31	5522.80	4.81	5834.36
2.82	4467.30	3.32	4847.19	3.82	5199.39	4.32	5529.20	4.82	5840.42
2.83	4475.21	3.33	4854.48	3.83	5206.19	4.33	5535.60	4.83	5846.48
2.84	4483.11	3.34	4861.76	3.84	5212.98	4.34	5541.99	4.84	5852.53
2.85	4491.00	3.35	4869.04	3.85	5219.77	4.35	5548.37	4.85	5858.57
2.86	4498.87	3.36	4876.30	3.86	5226.54	4.36	5554.74	4.86	5864.61
2.87	4506.73	3.37	4883.55	3.87	5233.31	4.37	5561.11	4.87	5870.64
2.88	4514.58	3.38	4890.79	3.88	5240.06	4.38	5567.47	4.88	5876.66
2.89	4522.41	3.39	4898.02	3.89	5246.81	4.39	5573.82	4.89	5882.68
2.9	4530.22	3.4	4905.24	3.9	5253.55	4.4	5580.16	4.9	5888.69
2.91	4538.03	3.41	4912.45	3.91	5260.28	4.41	5586.50	4.91	5894.70
2.92	4545.82	3.42	4919.64	3.92	5267.00	4.42	5592.83	4.92	5900.70
2.93	4553.60	3.43	4926.83	3.93	5273.72	4.43	5599.16	4.93	5906.69
2.94	4561.36	3.44	4934.01	3.94	5280.42	4.44	5605.47	4.94	5912.68
2.95	4569.11	3.45	4941.17	3.95	5287.12	4.45	5611.78	4.95	5918.66
2.96	4576.85	3.46	4948.33	3.96	5293.81	4.46	5618.08	4.96	5924.63
2.97	4584.57	3.47	4955.48	3.97	5300.49	4.47	5624.38	4.97	5930.60
2.98	4592.28	3.48	4962.61	3.98	5307.16	4.48	5630.66	4.98	5936.57
2.99	4599.98	3.49	4969.74	3.99	5313.82	4.49	5636.95	4.99	5942.52
3	4607.67	3.5	4976.85	4	5320.48	4.5	5643.22	5	5948.48

VELOCITY F/M IN 4-INCH DIAMETER (NOMINAL) SCHED. 40 PVC PIPE (D=4.026")

Q (SCFM)=128.8xKxDxD(PxdP/(T+460)xSs)E-2 **Using DWYER DS-300 FLOW SENSOR**

K, 4"dia.= 0.67 P, psig= 14.7 V (ft/min)= Q/(DxDx3.14159/4)

D, in.= 4.026 T, deg. F 60

dP in INCHES OF WATER COLUMN Ss = SPECIFIC GRAVITY AT 60 DEGREES F (AIR = 1.00)

dP	V	dP	V	dP	V	dP	V	dP	V
5.01	5954.42	5.51	6244.48	6.01	6521.66	6.51	6787.52	7.01	7043.36
5.02	5960.36	5.52	6250.15	6.02	6527.08	6.52	6792.73	7.02	7048.38
5.03	5966.29	5.53	6255.81	6.03	6532.50	6.53	6797.94	7.03	7053.40
5.04	5972.22	5.54	6261.46	6.04	6537.91	6.54	6803.14	7.04	7058.41
5.05	5978.14	5.55	6267.11	6.05	6543.32	6.55	6808.34	7.05	7063.42
5.06	5984.06	5.56	6272.75	6.06	6548.73	6.56	6813.54	7.06	7068.43
5.07	5989.97	5.57	6278.39	6.07	6554.13	6.57	6818.73	7.07	7073.43
5.08	5995.87	5.58	6284.02	6.08	6559.53	6.58	6823.91	7.08	7078.44
5.09	6001.77	5.59	6289.65	6.09	6564.92	6.59	6829.10	7.09	7083.43
5.1	6007.67	5.6	6295.27	6.1	6570.31	6.6	6834.28	7.1	7088.43
5.11	6013.55	5.61	6300.89	6.11	6575.69	6.61	6839.45	7.11	7093.42
5.12	6019.43	5.62	6306.51	6.12	6581.07	6.62	6844.62	7.12	7098.40
5.13	6025.31	5.63	6312.11	6.13	6586.44	6.63	6849.79	7.13	7103.39
5.14	6031.18	5.64	6317.72	6.14	6591.81	6.64	6854.96	7.14	7108.37
5.15	6037.04	5.65	6323.32	6.15	6597.18	6.65	6860.12	7.15	7113.34
5.16	6042.90	5.66	6328.91	6.16	6602.54	6.66	6865.27	7.16	7118.31
5.17	6048.75	5.67	6334.50	6.17	6607.90	6.67	6870.42	7.17	7123.28
5.18	6054.60	5.68	6340.08	6.18	6613.25	6.68	6875.57	7.18	7128.25
5.19	6060.44	5.69	6345.66	6.19	6618.60	6.69	6880.72	7.19	7133.21
5.2	6066.28	5.7	6351.23	6.2	6623.94	6.7	6885.86	7.2	7138.17
5.21	6072.11	5.71	6356.80	6.21	6629.28	6.71	6890.99	7.21	7143.13
5.22	6077.93	5.72	6362.37	6.22	6634.62	6.72	6896.13	7.22	7148.08
5.23	6083.75	5.73	6367.93	6.23	6639.95	6.73	6901.26	7.23	7153.03
5.24	6089.57	5.74	6373.48	6.24	6645.27	6.74	6906.38	7.24	7157.97
5.25	6095.37	5.75	6379.03	6.25	6650.60	6.75	6911.50	7.25	7162.91
5.26	6101.18	5.76	6384.57	6.26	6655.92	6.76	6916.62	7.26	7167.85
5.27	6106.97	5.77	6390.11	6.27	6661.23	6.77	6921.74	7.27	7172.79
5.28	6112.76	5.78	6395.65	6.28	6666.54	6.78	6926.85	7.28	7177.72
5.29	6118.55	5.79	6401.18	6.29	6671.85	6.79	6931.95	7.29	7182.65
5.3	6124.33	5.8	6406.70	6.3	6677.15	6.8	6937.05	7.3	7187.57
5.31	6130.10	5.81	6412.22	6.31	6682.44	6.81	6942.15	7.31	7192.49
5.32	6135.87	5.82	6417.74	6.32	6687.74	6.82	6947.25	7.32	7197.41
5.33	6141.64	5.83	6423.25	6.33	6693.03	6.83	6952.34	7.33	7202.32
5.34	6147.40	5.84	6428.76	6.34	6698.31	6.84	6957.43	7.34	7207.23
5.35	6153.15	5.85	6434.26	6.35	6703.59	6.85	6962.51	7.35	7212.14
5.36	6158.90	5.86	6439.76	6.36	6708.87	6.86	6967.59	7.36	7217.05
5.37	6164.64	5.87	6445.25	6.37	6714.14	6.87	6972.67	7.37	7221.95
5.38	6170.38	5.88	6450.74	6.38	6719.41	6.88	6977.74	7.38	7226.85
5.39	6176.11	5.89	6456.22	6.39	6724.67	6.89	6982.81	7.39	7231.74
5.4	6181.84	5.9	6461.70	6.4	6729.93	6.9	6987.88	7.4	7236.63
5.41	6187.56	5.91	6467.17	6.41	6735.19	6.91	6992.94	7.41	7241.52
5.42	6193.27	5.92	6472.64	6.42	6740.44	6.92	6998.00	7.42	7246.40
5.43	6198.98	5.93	6478.11	6.43	6745.69	6.93	7003.05	7.43	7251.29
5.44	6204.69	5.94	6483.56	6.44	6750.93	6.94	7008.10	7.44	7256.16
5.45	6210.39	5.95	6489.02	6.45	6756.17	6.95	7013.15	7.45	7261.04
5.46	6216.09	5.96	6494.47	6.46	6761.40	6.96	7018.19	7.46	7265.91
5.47	6221.78	5.97	6499.92	6.47	6766.64	6.97	7023.23	7.47	7270.78
5.48	6227.46	5.98	6505.36	6.48	6771.86	6.98	7028.27	7.48	7275.64
5.49	6233.14	5.99	6510.80	6.49	6777.09	6.99	7033.30	7.49	7280.51
5.5	6238.81	6	6516.23	6.5	6782.31	7	7038.33	7.5	7285.36

VELOCITY F/M IN 4-INCH DIAMETER (NOMINAL) SCHED. 40 PVC PIPE (D=4.026")

Q (SCFM)=128.8xKxDxD(PxdP/(T+460)xSs)E-2 **Using DWYER DS-300 FLOW SENSOR**

K, 4"dia.= 0.67 P, psig= 14.7 V (ft/min)= Q/(DxDx3.14159/4)

D, in.= 4.026 T, deg. F 60

dP in INCHES OF WATER COLUMN Ss = SPECIFIC GRAVITY AT 60 DEGREES F (AIR = 1.00)

dP	V	dP	V	dP	V	dP	V	dP	V
7.51	7290.22	8.01	7528.99	8.51	7760.42	9.01	7985.15	9.51	8203.72
7.52	7295.07	8.02	7533.69	8.52	7764.98	9.02	7989.58	9.52	8208.03
7.53	7299.92	8.03	7538.39	8.53	7769.54	9.03	7994.01	9.53	8212.34
7.54	7304.77	8.04	7543.08	8.54	7774.09	9.04	7998.43	9.54	8216.65
7.55	7309.61	8.05	7547.77	8.55	7778.64	9.05	8002.85	9.55	8220.96
7.56	7314.45	8.06	7552.46	8.56	7783.19	9.06	8007.27	9.56	8225.26
7.57	7319.28	8.07	7557.14	8.57	7787.73	9.07	8011.69	9.57	8229.56
7.58	7324.12	8.08	7561.82	8.58	7792.28	9.08	8016.11	9.58	8233.86
7.59	7328.95	8.09	7566.50	8.59	7796.81	9.09	8020.52	9.59	8238.15
7.6	7333.77	8.1	7571.17	8.6	7801.35	9.1	8024.93	9.6	8242.45
7.61	7338.60	8.11	7575.84	8.61	7805.89	9.11	8029.34	9.61	8246.74
7.62	7343.42	8.12	7580.51	8.62	7810.42	9.12	8033.75	9.62	8251.03
7.63	7348.23	8.13	7585.18	8.63	7814.95	9.13	8038.15	9.63	8255.32
7.64	7353.05	8.14	7589.84	8.64	7819.47	9.14	8042.55	9.64	8259.60
7.65	7357.86	8.15	7594.50	8.65	7824.00	9.15	8046.95	9.65	8263.89
7.66	7362.66	8.16	7599.16	8.66	7828.52	9.16	8051.34	9.66	8268.17
7.67	7367.47	8.17	7603.82	8.67	7833.04	9.17	8055.74	9.67	8272.44
7.68	7372.27	8.18	7608.47	8.68	7837.55	9.18	8060.13	9.68	8276.72
7.69	7377.07	8.19	7613.12	8.69	7842.07	9.19	8064.52	9.69	8281.00
7.7	7381.86	8.2	7617.76	8.7	7846.58	9.2	8068.90	9.7	8285.27
7.71	7386.66	8.21	7622.41	8.71	7851.09	9.21	8073.29	9.71	8289.54
7.72	7391.44	8.22	7627.05	8.72	7855.59	9.22	8077.67	9.72	8293.80
7.73	7396.23	8.23	7631.69	8.73	7860.09	9.23	8082.05	9.73	8298.07
7.74	7401.01	8.24	7636.32	8.74	7864.59	9.24	8086.43	9.74	8302.33
7.75	7405.79	8.25	7640.95	8.75	7869.09	9.25	8090.80	9.75	8306.59
7.76	7410.57	8.26	7645.58	8.76	7873.59	9.26	8095.17	9.76	8310.85
7.77	7415.34	8.27	7650.21	8.77	7878.08	9.27	8099.54	9.77	8315.11
7.78	7420.11	8.28	7654.83	8.78	7882.57	9.28	8103.91	9.78	8319.36
7.79	7424.88	8.29	7659.46	8.79	7887.06	9.29	8108.28	9.79	8323.62
7.8	7429.64	8.3	7664.07	8.8	7891.54	9.3	8112.64	9.8	8327.87
7.81	7434.40	8.31	7668.69	8.81	7896.03	9.31	8117.00	9.81	8332.11
7.82	7439.16	8.32	7673.30	8.82	7900.51	9.32	8121.36	9.82	8336.36
7.83	7443.92	8.33	7677.91	8.83	7904.98	9.33	8125.71	9.83	8340.60
7.84	7448.67	8.34	7682.52	8.84	7909.46	9.34	8130.07	9.84	8344.84
7.85	7453.42	8.35	7687.12	8.85	7913.93	9.35	8134.42	9.85	8349.08
7.86	7458.16	8.36	7691.73	8.86	7918.40	9.36	8138.77	9.86	8353.32
7.87	7462.91	8.37	7696.32	8.87	7922.87	9.37	8143.11	9.87	8357.55
7.88	7467.65	8.38	7700.92	8.88	7927.33	9.38	8147.46	9.88	8361.79
7.89	7472.38	8.39	7705.51	8.89	7931.80	9.39	8151.80	9.89	8366.02
7.9	7477.12	8.4	7710.10	8.9	7936.26	9.4	8156.14	9.9	8370.25
7.91	7481.85	8.41	7714.69	8.91	7940.71	9.41	8160.48	9.91	8374.47
7.92	7486.58	8.42	7719.28	8.92	7945.17	9.42	8164.81	9.92	8378.70
7.93	7491.30	8.43	7723.86	8.93	7949.62	9.43	8169.14	9.93	8382.92
7.94	7496.02	8.44	7728.44	8.94	7954.07	9.44	8173.47	9.94	8387.14
7.95	7500.74	8.45	7733.02	8.95	7958.52	9.45	8177.80	9.95	8391.36
7.96	7505.46	8.46	7737.59	8.96	7962.96	9.46	8182.13	9.96	8395.57
7.97	7510.17	8.47	7742.16	8.97	7967.40	9.47	8186.45	9.97	8399.79
7.98	7514.88	8.48	7746.73	8.98	7971.84	9.48	8190.77	9.98	8404.00
7.99	7519.59	8.49	7751.30	8.99	7976.28	9.49	8195.09	9.99	8408.21
8	7524.29	8.5	7755.86	9	7980.72	9.5	8199.41	10	8412.41

VELOCITY F/M IN 4-INCH DIAMETER (NOMINAL) SCHED. 40 PVC PIPE (D=4.026")

Q (SCFM)=128.8xKxDxD(PxdP/(T+460)xSs)E-2 **Using DWYER DS-300 FLOW SENSOR**

K, 4"dia.= 0.67 P, psig= 14.7 V (ft/min)= Q/(DxDx3.14159/4)

D, in.= 4.026 T, deg. F 60

dP in INCHES OF WATER COLUMN Ss = SPECIFIC GRAVITY AT 60 DEGREES F (AIR = 1.00)

dP	V	dP	V	dP	V	dP	V	dP	V
10.1	8454.37	15.1	10337.35	20.1	11926.66	25.1	13327.77	30.1	14594.99
10.2	8496.12	15.2	10371.52	20.2	11956.29	25.2	13354.29	30.2	14619.22
10.3	8537.67	15.3	10405.58	20.3	11985.85	25.3	13380.76	30.3	14643.40
10.4	8579.01	15.4	10439.53	20.4	12015.33	25.4	13407.18	30.4	14667.55
10.5	8620.16	15.5	10473.37	20.5	12044.74	25.5	13433.55	30.5	14691.65
10.6	8661.11	15.6	10507.10	20.6	12074.09	25.6	13459.86	30.6	14715.71
10.7	8701.87	15.7	10540.72	20.7	12103.36	25.7	13486.13	30.7	14739.74
10.8	8742.44	15.8	10574.24	20.8	12132.56	25.8	13512.34	30.8	14763.73
10.9	8782.82	15.9	10607.65	20.9	12161.69	25.9	13538.50	30.9	14787.67
11	8823.01	16	10640.96	21	12190.75	26	13564.61	31	14811.58
11.1	8863.03	16.1	10674.16	21.1	12219.74	26.1	13590.67	31.1	14835.45
11.2	8902.86	16.2	10707.26	21.2	12248.66	26.2	13616.68	31.2	14859.29
11.3	8942.52	16.3	10740.25	21.3	12277.51	26.3	13642.64	31.3	14883.08
11.4	8982.00	16.4	10773.15	21.4	12306.30	26.4	13668.55	31.4	14906.84
11.5	9021.31	16.5	10805.94	21.5	12335.02	26.5	13694.42	31.5	14930.55
11.6	9060.45	16.6	10838.64	21.6	12363.67	26.6	13720.23	31.6	14954.23
11.7	9099.42	16.7	10871.23	21.7	12392.26	26.7	13746.00	31.7	14977.88
11.8	9138.22	16.8	10903.73	21.8	12420.78	26.8	13771.72	31.8	15001.48
11.9	9176.86	16.9	10936.14	21.9	12449.24	26.9	13797.38	31.9	15025.05
12	9215.34	17	10968.45	22	12477.63	27	13823.01	32	15048.58
12.1	9253.66	17.1	11000.66	22.1	12505.95	27.1	13848.58	32.1	15072.08
12.2	9291.81	17.2	11032.78	22.2	12534.21	27.2	13874.11	32.2	15095.54
12.3	9329.82	17.3	11064.80	22.3	12562.41	27.3	13899.59	32.3	15118.96
12.4	9367.67	17.4	11096.74	22.4	12590.55	27.4	13925.02	32.4	15142.35
12.5	9405.36	17.5	11128.58	22.5	12618.62	27.5	13950.41	32.5	15165.70
12.6	9442.91	17.6	11160.33	22.6	12646.63	27.6	13975.75	32.6	15189.01
12.7	9480.31	17.7	11191.99	22.7	12674.58	27.7	14001.05	32.7	15212.29
12.8	9517.56	17.8	11223.56	22.8	12702.47	27.8	14026.30	32.8	15235.53
12.9	9554.67	17.9	11255.04	22.9	12730.29	27.9	14051.50	32.9	15258.74
13	9591.63	18	11286.44	23	12758.06	28	14076.66	33	15281.91
13.1	9628.45	18.1	11317.75	23.1	12785.76	28.1	14101.78	33.1	15305.05
13.2	9665.13	18.2	11348.97	23.2	12813.41	28.2	14126.85	33.2	15328.15
13.3	9701.67	18.3	11380.10	23.3	12840.99	28.3	14151.87	33.3	15351.22
13.4	9738.07	18.4	11411.15	23.4	12868.52	28.4	14176.85	33.4	15374.25
13.5	9774.34	18.5	11442.12	23.5	12895.99	28.5	14201.79	33.5	15397.25
13.6	9810.48	18.6	11473.00	23.6	12923.40	28.6	14226.68	33.6	15420.21
13.7	9846.48	18.7	11503.80	23.7	12950.75	28.7	14251.53	33.7	15443.14
13.8	9882.35	18.8	11534.52	23.8	12978.04	28.8	14276.34	33.8	15466.04
13.9	9918.09	18.9	11565.16	23.9	13005.28	28.9	14301.10	33.9	15488.90
14	9953.70	19	11595.71	24	13032.46	29	14325.82	34	15511.73
14.1	9989.19	19.1	11626.19	24.1	13059.58	29.1	14350.50	34.1	15534.52
14.2	10024.55	19.2	11656.58	24.2	13086.65	29.2	14375.14	34.2	15557.28
14.3	10059.78	19.3	11686.90	24.3	13113.66	29.3	14399.73	34.3	15580.01
14.4	10094.90	19.4	11717.14	24.4	13140.61	29.4	14424.29	34.4	15602.70
14.5	10129.89	19.5	11747.30	24.5	13167.51	29.5	14448.80	34.5	15625.37
14.6	10164.76	19.6	11777.38	24.6	13194.36	29.6	14473.26	34.6	15647.99
14.7	10199.51	19.7	11807.39	24.7	13221.15	29.7	14497.69	34.7	15670.59
14.8	10234.14	19.8	11837.32	24.8	13247.88	29.8	14522.08	34.8	15693.15
14.9	10268.66	19.9	11867.17	24.9	13274.57	29.9	14546.42	34.9	15715.69
15	10303.06	20	11896.95	25	13301.19	30	14570.73	35	15738.19

APPENDIX D
ORCAA ORDER OF APPROVAL, NOTICE OF CONSTRUCTION

OPERATIONS AND MAINTENANCE MANUAL
Soil Vapor Extraction System
Allison's Norge Village
120 Northeast Turner Street
Olympia, Washington

Farallon PN: 663-010

Olympic Region Clean Air Agency
2940-B Limited Lane NW
Olympia, WA 98502

1-800-422-5623 or
(360) 586-1044
Fax: (360) 491-6308
www.ORCAA.org

Executive Director
Richard A. Stedman

Clean Air is Everyone's Business

RECEIVED
JAN 10 2007
BY:

January 3, 2007

Ms. Carla E. Brock, L.G.
Farallon Consulting, Inc.
320 3rd Ave. Northeast
Issaquah, WA 98027

SUBJECT: FINAL DETERMINATION FOR NOC #06NOC511

Dear Ms. Brock:

Olympic Region Clean Air Agency (ORCAA) has approved the Notice of Construction (NOC) application (06NOC511) submitted by Farallon Consulting, Inc. to install a soil vapor extraction remediation system at the former site of the Allison's Norge Village Dry Cleaners at 120 NE Turner Street in Olympia, Washington.

A Final Determination report and an Approval Order are attached. Please read and retain these documents for future reference as they describe the air regulations and special conditions of approval. Applicable regulations are identified in the Attachments to the Final Determination. The Approval Order establishes special conditions of approval. Both applicable regulations and special conditions of approval are enforceable by ORCAA. A penalty may be assessed for non-compliance with either applicable regulations or conditions in the Approval Order.

Within thirty (30) days from notice of ORCAA's final decision, you may appeal the Approval Order to the Pollution Control Hearings Board (PCHB) by filing the appeal in writing with the PCHB and serving a copy upon ORCAA.

Please call me if you have any questions at 360-586-1044 Extension 109.

Sincerely,

John T. Kelly
Engineer I

Serving Clallam, Grays Harbor, Jefferson, Mason, Pacific and Thurston counties.

ORDER OF APPROVAL
NOTICE OF CONSTRUCTION
Former Allison's Norge Village Dry Cleaners
NOC #: 06NOC511
December 28, 2006

This Order of Approval (Order) is issued in accordance with Olympic Region Clean Air Agency's (ORCAA) Regulations and Chapter 173-400 of the Washington Administrative Code. Conditional approval is hereby granted to Farallon Consulting to construct a soil vapor extraction (SVE) system at the former site of the Allison's Norge Village Dry Cleaners at 120 Northeast Turner Street in Olympia, Washington, as described in the associated NOC application (06NOC511). The special conditions established in this Order are enforceable requirements and are in addition to applicable state, local and federal regulations and standards. Compliance with the conditions of this Order does not relieve the owner or operator from compliance with ORCAA Regulations, RCW 70.94, or any other emissions control requirements, nor from the resulting liabilities and/or legal remedies for failure to comply. The owner or applicant may appeal this Order to the Pollution Control Hearings Board (PCHB) by filing a written appeal with the PCHB and serving a copy upon ORCAA within thirty (30) days from receipt of the Order.

THIS ORDER OF APPROVAL IS ISSUED SUBJECT TO THE FOLLOWING CONDITIONS:

1. **Technical Specifications:** Air pollution generating processes and equipment and air pollution control devices at the facility shall be in accordance with the information and specifications as described in the associated NOC application unless otherwise specified by condition in this Approval Order. Deviations from the equipment types, materials, and specifications described in the NOC application may constitute a violation of this Approval Order and Regulation 1, unless prior approval is given by ORCAA.
   [Regulatory Basis: ORCAA 6.1.2(l)]

2. **Controls:** Unless permission has been granted under condition #4, all air emissions from the soil vapor extraction system shall be vented through two canisters of granulated activated carbon operated in series. When breakthrough has been detected for the first canister, it shall be removed and replaced with the second canister and a new canister shall be placed in the second position. [Regulatory Basis: ORCAA 8.6(a); WAC 173-460-060]

3. **Monitoring and Record Keeping:** Concentrations of PCE shall be monitored immediately before entering the first canister, between the two canisters, and immediately after the second canister according to the following schedule:
   a. On the first, seventh, and fourteenth days of operation,
   b. Quarterly thereafter (or less frequently, with ORCAA's approval), and
   c. Immediately after replacement of a canister.

   Sample analysis shall be performed using EPA Method 8260B or equivalent method if approved by ORCAA in advance. A colorimetric tube or portable detector may be used if it

can be guaranteed to detect PCE at concentrations as low as 0.1 ppm. Records shall be kept of all monitoring and equipment replacement and made available to ORCAA upon request. [Regulatory Basis: ORCAA 8.11(a)]

4. **Removal of Controls:** The owner or operator may request ORCAA's approval to remove the activated carbon system when the uncontrolled PCE concentration can be maintained below the detection limit for two consecutive scheduled tests. [Regulatory Basis: WAC 173-460-060]

5. **Operation and Maintenance Plan:** The owner or operator shall develop and implement an operation and maintenance plan that shall include procedures for inspecting and maintaining the system and procedures for monitoring PCE concentrations. The plan shall be in writing and made available to ORCAA upon request. [Regulatory Basis: ORCAA 4.3(g); WAC 173-460-040(9)]

6. **Reporting of Termination:** The owner or operator shall report to ORCAA within thirty days after the completion of the soil vapor extraction project. [Regulatory Basis: ORCAA 8.11(b)]

John T. Kelly 12/28/06

PREPARED BY: John T. Kelly, Engineer 1 **Date**

Mark V. Goodin 12/28/06

REVIEWED BY: Mark V. Goodin, PE **Date**

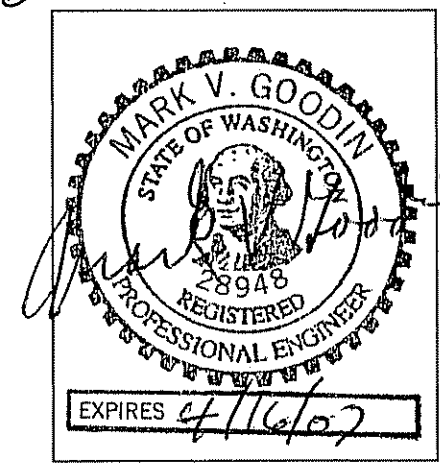

NOTICE OF CONSTRUCTION
FINAL DETERMINATION TO APPROVE

Olympic Region Clean Air Agency

Issued to:	**Farallon Consulting**	**Cnty: 67**
Location:	**Former Allison's Norge Village Dry Cleaners** **120 NE Turner Street** **Olympia, Washington**	**Srce: 2378** **RC: RC15** **File: 1259**
Application #:	**06NOC511**	
Prepared on:	**December 28, 2006**	

1. Project Description & Emissions

Proposal

Farallon Consulting (Farallon) is proposing to install and operate a soil vapor extraction (SVE) system to remediate soil contaminated with perchloroethylene (PCE) at 120 NE Turner Street in Olympia, Washington. The contaminated soils underlie a paved parking lot and a single-story brick building in a mixed commercial-residential area. The current commercial dry cleaning operation, a barbershop and an insurance broker occupy the building. Mechanical and control equipment for the system will be located in a fenced compound to be constructed along the west side of the building.

Emissions

PCE is a federally regulated hazardous air pollutant (HAP) and is also regulated under WAC 173-460 as a toxic air pollutant (TAP). Farallon submitted estimates of the potential to emit (PTE) for PCE for the lifetime of the project.

Control Devices and Monitoring

Emissions of PCE from the SVE system will be controlled by two canisters of activated carbon in series, vented to a four-inch inner-diameter PVC stack. The stack will be fastened to the exterior west wall of the building and protrude six feet above the roofline. Periodic monitoring of the inlet and exhaust of each carbon canister will be required to determine when breakthrough of the initial carbon canister has occurred. Upon determination of breakthrough, canisters will be relocated or replaced in accordance with procedures established under the approval order associated with this determination. ORCAA concludes that the proposed SVE system, taking into consideration controls, will comply with all applicable air regulations.

2. Facility History

History of the facility

Soils at the site became contaminated with PCE from Allison's Norge Village Dry Cleaning, a coin–operated dry cleaning establishment that operated from 1960 until 1990. At that time Eastside

Cleaners acquired the property and replaced the coin-operated machines with a new dry-to-dry commercial dry cleaning machine.

Air permitting history

Eastside Cleaners has operated a commercial dry cleaning operation under registration with ORCAA at the site since 1990. The SVE system to be installed by Farallon under this NOC will operate under a separate registration, independent from Eastside Cleaners.

3. Administrative Requirements

☒Fees paid.

☒Application complete. Application determined complete on 08/02/06.

4. SEPA Review

☐The project is exempt from SEPA requirements per WAC 197-11-800(3) since it involves only repair, remodeling, maintenance or minor alteration of existing structures, equipment or facilities and will involve no material expansions or changes in use (describe basis):

☐SEPA is applicable and ORCAA is the lead agency. A copy of ORCAA's SEPA threshold determination and a list of any environmental documents used to support the determination are included in the attachments.

- ☐Existing environmental documents were either adopted, incorporated by reference by ORCAA, or an addendum to an existing environmental document was issued by ORCAA pursuant to WAC 197-11-600.
- ☐No existing environmental documents were used to support ORCAA's SEPA threshold determination.

☒SEPA is applicable and another agency is the lead agency. A copy of that agency's SEPA Threshold Determination and list of any support documents are included in the attachments.

Lead Agency	**City of Olympia**
Determination	Determination of Non-Significance
Date of Issuance	December 13, 2006

5. Applicability and Compliance Evaluations

☒The proposed new stationary source or modification will likely comply with all applicable state, federal and local air regulations and standards. The following table lists those air regulations and standards that required an applicability and/or compliance evaluation. A comprehensive list of applicable air regulations and standards is attached.

Regulation/Standard	**Description**	**Applicable?**	**Compliance Likely?**	**Evaluation Attached?**
General ORCAA and State Air Requirements	General regulations and standards found in Article 9 of ORCAA Regulation 1, and WAC 173-400-040.	Yes	Yes	No

6. BACT

The proposed new stationary source or modification will employ BACT for all pollutants not previously emitted or whose emissions would increase as a result of the new stationary source or modification.

Pollutant	BACT Applicable?	Description: Describe BACT limits, and control technology or methods to meet BACT limits.
PCE	Yes	Use of two 55-gallon activated carbon canisters in series and monitoring for breakthrough.

7. Ambient Impact Analysis (Criteria Pollutants)

Allowable emissions from the proposed new stationary source or modification will not delay the attainment date for an area not in attainment nor cause or contribute to a violation of any ambient air quality standard:

☒No criteria pollutant emissions increases expected.

☐Expected increases in criteria pollutant emission rates are below significant emission rate thresholds for all criteria pollutants (see Attachments).

☐Air Quality Impacts Analysis completed by ORCAA (see Attachments).

☐Air Quality Impacts Analysis provided by applicant (see NOC Application).

8. Ambient Impact Analysis (Toxic Air Pollutants)

The requirements for approval of new sources of Toxic Air Pollutants (TAPs) in Chapter 173-460 WAC have been met.

☐No TAP emissions increases expected (see Attachments).

☒Maximum TAP emission rate increases do not exceed the "small quantity emission rates" specified in WAC 173-460-080(2)(e) (see Attachments).

☐Analysis of TAP emission increases with respect to Acceptable Source Impact Levels (ASIL) in accordance with WAC 173-460-080 completed by ORCAA (see Attachments).

☐Analysis of TAP emission increases with respect to Acceptable Source Impact Levels (ASIL) in accordance with WAC 173-460-080 completed by Applicant (see NOC Application).

9. Title V Air Operating Permit (AOP)

☒**Minor Source.** AOP not required since facility-wide potential to emit is minor for all pollutants (see Attachments).

☐**Synthetic Minor Source.** AOP not required since applicant requested voluntary limit on emissions (Describe voluntary limit and associated conditions):

☐**New Major Source.** AOP required since proposed new stationary source or modification results in a new major source under Title V.

☐**Existing Major/Revision Not Required.** New stationary source or modification proposed at an existing major source with an AOP. However, revision to the AOP **not** required as the proposed new stationary source or modification qualifies as a "change not requiring permit revisions" in accordance with WAC 173-401-722.

☐**Existing Major/Off-Permit Change.** New stationary source or modification proposed at an existing major source with an AOP. However, revision to the AOP **not** required as the proposed new stationary source or modification qualifies as an "off-permit change" according to WAC 173-401-724.

☐**Existing Major/AOP Revision Required.** New stationary source or modification proposed at an existing major source with an AOP. Revision to the AOP required in accordance with:

- ☐Administrative permit amendment procedures under WAC 173-401-720.
- ☐Minor permit modification procedures under WAC 173-401-725(2).
- ☐Procedures for group processing of minor permit modifications under WAC 173-401-725(3).

☐Permit modification procedures under WAC 173-401-725(4).

10. Prevention of Significant Deterioration (PSD) Permitting

☒PSD permit not required since the proposed new stationary source or modification will result in a minor source with respect to the State's PSD program in WAC 173-400-141 (emission calculations attached).

☐The existing source is a PSD major source. However, a PSD permit is not required since the proposed modification is not a major modification with respect to the State's PSD program in WAC 173-400-141 (emission calculations attached).

☐PSD permit issued by Ecology (PSD Permit Conditions Attached):

11. Public Involvement

☐Public notice was not triggered as the application does not trigger a mandatory public comment period and the application was received prior to the October 6, 2003 effective date of the new public noticing provisions.

☒Public notice of ORCAA's receipt of the NOC application, pursuant to ORCAA 1.7.04(a), was issued 9/29/2006. No comments were received during the comment period.

☐Public notice of ORCAA's Preliminary Determination, pursuant to ORCAA 1.704(c), was issued . No comments were received during the comment period.

☐Public notice of ORCAA's Preliminary Determination, pursuant to ORCAA 1.7.04(c), was issued . Comments were received during public comment period and will be considered in making a Final Determination.

☐Public Hearing will be held pursuant to ORCAA 1.7.04(e) on May 3, 2005 (see public notice . Comments received during public comment period and public hearing will be considered in making a Final Determination.

12. Conditions of Approval

1. **Technical Specifications:** Air pollution generating processes and equipment and air pollution control devices at the facility shall be in accordance with the information and specifications as described in the associated NOC application unless otherwise specified by condition in this Approval Order. Deviations from the equipment types, materials, and specifications described in the NOC application may constitute a violation of this Approval Order and Regulation 1, unless prior approval is given by ORCAA.
   [Regulatory Basis: ORCAA 6.1.2(l)]

2. **Controls:** Unless permission has been granted under condition #4, all air emissions from the soil vapor extraction system shall be vented through two canisters of granulated activated carbon operated in series. When breakthrough has been detected for the first canister, it shall be removed and replaced with the second canister and a new canister shall be placed in the second position. [Regulatory Basis: ORCAA 8.6(a); WAC 173-460-060]

3. **Monitoring and Record Keeping:** Concentrations of PCE shall be monitored immediately before entering the first canister, between the two canisters, and immediately after the second canister according to the following schedule:
   a. On the first, seventh, and fourteenth days of operation,
   b. Quarterly thereafter (or less frequently, with ORCAA's approval), and

c. Immediately after replacement of a canister.

Sample analysis shall be performed using EPA Method 8260B or equivalent method if approved by ORCAA in advance. A colorimetric tube or portable detector may be used if it can be guaranteed to detect PCE at concentrations as low as 0.1 ppm. Records shall be kept of all monitoring and equipment replacement and made available to ORCAA upon request.
[Regulatory Basis: ORCAA 8.11(a)]

4. **Removal of Controls:** The owner or operator may request ORCAA's approval to remove the activated carbon system when the uncontrolled PCE concentration can be maintained below the detection limit for two consecutive scheduled tests.
[Regulatory Basis: WAC 173-460-060]

5. **Operation and Maintenance Plan:** The owner or operator shall develop and implement an operation and maintenance plan that shall include procedures for inspecting and maintaining the system and procedures for monitoring PCE concentrations. The plan shall be in writing and made available to ORCAA upon request.
[Regulatory Basis: ORCAA 4.3(g); WAC 173-460-040(9)]

6. **Reporting of Termination:** The owner or operator shall report to ORCAA within thirty days after the completion of the soil vapor extraction project.
[Regulatory Basis: ORCAA 8.11(b)]

John T. Kelly 12/28/06

PREPARED BY: John T. Kelly, Engineer 1 **Date**

12/28/06

INSPECTOR REVIEW: Steve Rybolt, Air Quality Specialist 1 **Date**

Mark V Goodin 12/28/06

REVIEWED BY: Mark V. Goodin, PE **Date**

ATTACHMENTS

☒ ATTACHMENT 1: AIR REGULATIONS AND STANDARDS

☒ ATTACHMENT 2: LIST OF ABBREVIATIONS AND ACRONYMS

☒ ATTACHMENT 3: SEPA DOCUMENTS

☒ ATTACHMENT 4: EMISSIONS CALCULATIONS

Attachment 1

Applicable Regulations and Standards

TABLE 1: Summary of Applicable Regulations and standards

TITLE	CITATION	BRIEF DESCRIPTION
Generally Applicable Requirements and Performance Standards:		
Annual Registration	WAC 173-400-101 ORCAA Reg. 1, Sect. 5.01	Requires annual registration and reporting of annual emissions Registration Category: RC15
Annual Registration Fees	WAC 173-400-104 ORCAA Reg. 1, Sect. 5.05	Provides local air pollution agencies the authority to assess an annual fee to registered air pollutant sources.
New Source Review (NSR) Requirements	ORCAA Reg. 1 Article 7; WAC 173-400-110; WAC 173-400-114	Approval by ORCAA through a NOC application is required prior to establishing or constructing any new source of emissions, or modifying an existing source. This includes removal of a control device or substantial modification of an existing control device.
Concealment and Masking	WAC 173-400-040(7) ORCAA Reg. 1, Sect. 9.12	Prohibits the installation or use of any means that conceals or masks an emission of an air contaminant that would otherwise violate any provisions of this chapter.
Control Equipment Maintenance and Repair	ORCAA Reg. 1, Sect. 9.16	Requires air contaminant sources to keep any process and/or air pollution control equipment in good operation and repair.
Emission Inventory	WAC 173-400-105(1) ORCAA Reg. 1, Sect 5.03	Requires maintenance of records relating to air pollutant emissions and submittal of an annual emissions inventory if required.
Emissions Detrimental to Persons or Property	WAC 173-400-040(5) ORCAA Reg. 1, Sect. 9.23	Prohibits emissions of any air contaminant from any source that are detrimental to persons or property.
Fallout Prohibition	WAC 173-400-040(2), ORCAA 1.9.05(e)	Prohibits particulate emissions from any source to be deposited, beyond the property under direct control of the owner or operator of the source, in sufficient quantity to interfere unreasonably with the use and enjoyment of the property upon which the material was deposited.
Fugitive Dust Sources	WAC 173-400-040(8) ORCAA Reg. 1, Sect 9.05(c)	Requires reasonable precautions be taken to prevent fugitive dust from becoming airborne
Fugitive Emissions	WAC 173-400-040(3),	Requires that reasonable precautions be taken for controlling fugitive emissions.
Odors State Regulation	WAC 173-400-040 (4)	Requires use of "recognized good practices and procedures" for control of any odor which may unreasonably interfere with the use or enjoyment of another person's property.
Odors ORCAA Regulation	ORCAA Reg. 1, Sect. 9.11	Requires that reasonably available control techniques and measures be used to control odor-bearing gases. Prohibits emissions of any odor that unreasonably interferes with another person's use and enjoyment of their property.
Record Keeping and Reporting	ORCAA Reg. 1, Article 13	Requires the following: 1. Maintenance of records on the nature and amounts of emissions and other related information as deemed necessary by ORCAA; 2. Reporting of emissions to ORCAA upon request.
Equipment-Specific Applicable Requirements and Performance Standards:		
Particulate Standards for Process units	WAC 173-400-060 ORCAA Reg. 1, Sect 9.05(a)	Prohibits emissions from any process unit in excess of 0.1 grain/dscf. EPA test methods from 40 CFR Appendix A shall be used should demonstration of compliance be required.

Attachment 2

Abbreviations and Acronyms

ABBREVIATIONS AND ACRONYMS

AOP	Air Operating Permit
AP-42	Compilation of Emission Factors, AP-42, Fifth Edition, Volume I, Stationary Point and Area Sources – Published by EPA
ASIL	Acceptable Source Impact Level pursuant to Chapter 173-460 WAC
BACT	Best Available Control Technology
FCAA	Federal Clean Air Act
CAM	Compliance assurance monitoring (40 CFR 64)
CFR	Code of Federal Regulations
CO	Carbon monoxide
EPA	United States Environmental Protection Agency
HAP	Hazardous air pollutant listed pursuant to Section 112 FCAA
MACT	Maximum Achievable Control Technology
NESHAPs	National Emission Standards for Hazardous Air Pollutants
NAAQS	National Ambient Air Quality Standard
NO_X	Nitrogen oxides
NOC	Notice of Construction application
NSPS	New Source Performance Standards
NSR	New Source Review
PM	Total particulate matter (filterable + condensable particulate matter)
PM_{10}	Particulate matter with an aerodynamic diameter less than or equal to 10 micrometers (filterable + condensable particulate matter)
PM_{25}	Particulate matter with an aerodynamic diameter less than or equal to 2.5 micrometers (filterable + condensable particulate)
PSD	Prevention of Significant Deterioration
RACT	Reasonably Available Control Technology
RBLC	RACT/BACT/LEAR Clearinghouse
RCW	Revised Code of Washington
SO_2	Sulfur Dioxide
SQER	Small Quantity Emission Rate listed in Chapter 173-460 WAC
ORCAA	Olympic Region Clean Air Agency
TAP	Toxic Air Pollutant pursuant to Chapter 173-460 WAC
T-BACT	Best Available Control Technology for toxic air pollutants
VOC	Volatile Organic Compound
WAC	Washington Administrative Code

UNITS OF MEASUREMENT

'	minute (measurement of angle)
"	second (measurement of angle)
°	degree
acfm	actual cubic feet per minute
atm	atmosphere
Bhp	Brake horse power
Btu	British thermal units
cfm	cubic feet per minute
dscfm	dry standard cubic feet per minute
°F	degree Fahrenheit
ft	feet
g	grams
g/s	grams per second
gal	gallon
gr	grain
hr	hour
hp	horsepower
in	inches
K	degree Kelvin
kg	kilograms
km	kilometers
kW	kilowatt
L	liter
lb	pounds
m	meters
M	thousand
min	minute
Mbf	thousand board feet
MMbf	million board feet
MM	million
ug	micrograms
MMBtu	million British thermal units
ppm	parts per million
ppmvd	parts per million, dry volume
ppb	parts per billion
psi	pounds per square inch
s	second
scfm	standard cubic feet per minute
tpy	tons per year

Attachment 3

SEPA Documents

City of
OLYMPIA

Community Planning & Development, 837 7th Avenue, SE, P.O. Box 1967, Olympia, WA 98507-1967
Telephone (360) 753-8314 - Fax (360) 753-8087

RECEIVED
DEC 14 2006
ORCAA

STATE ENVIRONMENTAL POLICY ACT
DETERMINATION OF NONSIGNIFICANCE

Project Name:	**Allison's Norge Village Dry Cleaner Soil Remediation (aka Storman's site)**
Description of Proposal:	Removal of tetrachloroethane (PCE) from soil by soil-vapor extraction method together with groundwater monitoring and other associated activity. (File 06-1734)
Location of Proposal:	120 Turner SE, Olympia WA; Section 13, Township 18 N., Range 1 W.W.M.; Tax Parcel No. 80800500102
Applicant:	Farallon Consulting, LLC, 320 3rd Avenue NE, Issaquah, WA 98027
Representative:	Carla Brock, L.G. of Farallon Consulting
Lead Agency:	City of Olympia
SEPA Official:	Todd Stamm, Planning Manager
Date of Issue:	December 13, 2006

Threshold Determination: The lead agency for this proposal has determined that it probably will **not** have a significant adverse impact upon the environment. Therefore an Environmental Impact Statement **is not** required under RCW 43.21C.030(2)(C). This decision was made after review by the City of Olympia of an Environmental Checklist and other information on file with the City. This information is available to the public on request. The environmental review and SEPA threshold determination of this proposed action are based upon an environmental checklist and that project description dated Septmeber 21, 2006.

Comments regarding this DNS should be directed to the SEPA Official at the address above. This DNS is **not** a permit. If conditions are added during or following the 14-day comment period, a mitigated DNS may be issued.

Attachment 4

Emissions Calculations

COMMENT DEADLINE: 5:00 p.m., December 27, 2006

APPEAL PROCEDURE: Pursuant to RCW 43.21C.075(3) and Olympia City Code 14.04.160(A), the lack of conditions (mitigating measures) of a DNS may be appealed by any agency or aggrieved person. Appeals must be filed with the Community Planning and Development Department at the address above within twenty-one (21) calendar days of the date of issue. Any appeal must be accompanied by a $200 administrative appeal fee.

APPEAL DEADLINE: 5:00 p.m., January 3, 2007

Issued by:

TODD STAMM
Planning Manager

cc: Department of Ecology (Barbara Ritchie) (w/checklist)
Jeff Fant, CP&D, Development Engineering Section (w/checklist)
Squaxin Island Tribe (Jeff Dickison) w/ checklist
Olympic Region Clean Air Agency (John Kelly) w/ checklist
George Ziesemer, Olympia Fire Department
Joe Roush, CP&D, Development Engineering Section
Olympia Public Works (Victoria DeCillo)
Olympia Police Dept. (Field Op Commander)
Thurston County Environmental Health Dept. (Jim Goode)
Department of Ecology - Toxic Clean-Up Program (Dave Jansen)
Department of Ecology – Soils Contamination (Bob Warren)
Department of Health - Water Quality (Karen Klocke)
Thurston County Assessor's Office (Steve Cummings)
Puget Sound Energy (Amy Tousley)
Bigelow Hts. Neighborhood Association
Upper Eastside Neighborhood Association
Eastside Neighborhood Association
Adjacent Property Owners on List
Cathie Butler, Communications Manager
Applicant's Representative

Table 1
Discharge Calculation for Tetrachloroethene
Three Hours After Startup of Soil Vapor Extraction System
Allison's Norge Village,
Olympia, Washington
Farallon PN: 663-010

CALCULATION OF TETRACHLOROETHYLENE (PERCHLOROETHYLENE, PCE, PERC) DISCHARGE								
Source[1]	PCE (ppm vol)[2]	Accuracy Factor	Flow (cfm)[3]	Air Density (lb/cf)[4]	min/day	PCE Molecular Weight	Air Molecular Weight	lb/day[5]
Blower Discharge	100.00	1.1	800	0.0748	1440	165.8	28.96	54.27

CALCULATION FORMULA:
ppmv x accuracy factor x flow (cfm) x air density (lb/cf) x1440 (min/day) x Hydrocarbon molecular weight
/ 28.96 (air molecular weight) x 1,000,000 =
=discharge rate (lb. per day)

Table 2
Discharge Calculation for Tetrachloroethene
Two to Four Weeks After Startup of Soil Vapor Extraction System
Allison's Norge Village
Olympia, Washington
Farallon PN: 663-010

CALCULATION OF TETRACHLOROETHYLENE (PERCHLOROETHYLENE, PCE, PERC) DISCHARGE								
Source[1]	PCE (ppm vol)[2]	Accuracy Factor	Flow (cfm)[3]	Air Density (lb/cf)[4]	min/day	PCE Molecular Weight	Air Molecular Weight	lb/day[5]
Blower Discharge	10.0000	1	800	0.0748	1440	102	28.96	3.03

CALCULATION FORMULA:
ppm-vol x accuracy factor x flow (cfm) x air density (lb/cf) x1440 (min/day) x Hydrocarbon molecular weight
28.96 (air molecular weight) x 1,000,000
= discharge (lb/day)

Table 3
Discharge Calculation for Tetrachloroethene
Five to Seven Months After Startup of Soil Vapor Extraction System
Allison's Norge Village,
Olympia, Washington
Farallon PN: 663-010

CALCULATION OF TETRACHLOROETHYLENE (PERCHLOROETHYLENE, PCE, PERC) DISCHARGE								
Source[1]	PCE (ppm vol)[2]	Accuracy Factor	Flow (cfm)[3]	Air Density (lb/cf)[4]	min/day	PCE Molecular Weight	Air Molecular Weight	lb/day[5]
Blower Discharge	5.0000	1	800	0.0748	1440	102	28.96	1.52

CALCULATION F
ppm-vol x accuracy factor x flow (cfm) x air density (lb/cf) x1440 (min/day) x Hydrocarbon molecular weight
28.96 (air molecular weight) x 1,000,000
= discharge (lb/day)

1- Source located at manifold pipe downstream of all SVE collector pipe connections.
2- ppm vol = parts per million by volume based on laboratory analysis.
3- cfm = cubic feet per minute
4- lb/cf = pounds per cubic foot
5- lb/day = pounds per day
6- lb/yr = pounds per year

APPENDIX E
FIELD FORMS

OPERATIONS AND MAINTENANCE MANUAL
Soil Vapor Extraction System
Allison's Norge Village
120 Northeast Turner Street
Olympia, Washington

Farallon PN: 663-010

Table 1
Soil Vapor Extraction Well Data Sheet
Allison's Norge Village
Olympia, Washington
Farallon PN: 663-010

Well ID	Date / Time	System Vacuum (IOW)	Well Vacuum (IOW)	Valve Setting (turns open from close)	Flow Rate	PCE - Tube Concentration (ppmv)	Comments
SVE-1I							
SVE-2S							
SVE-3I							
SVE-5S							
SVE-6I							
SVE-7S							
SVE-8S							
SVE-9I							
SVE-10I							
SVE-11S							
SVE-11H							
SVE-12S							
SVE-13S							
SVE-14S							
SVE-15S							
SVE-16I							
SVE-17S							
SVE-18I							

S - Shallow zone well
I - Intermediate zone well
H - Horizotal shallow zone well

APPENDIX F
SITE-SPECIFIC HEALTH AND SAFETY PLAN

OPERATIONS AND MAINTENANCE MANUAL
Soil Vapor Extraction System
Allison's Norge Village
120 Northeast Turner Street
Olympia, Washington

Farallon PN: 663-010

FARALLON consulting

975 5th Avenue Northwest, Issaquah, Washington 98027
Tel: (425) 295-0800 Fax: (425) 295-0850
www.farallonconsulting.com

HEALTH AND SAFETY PLAN

SOIL VAPOR EXTRACTION SYSTEM INSTALLATION, WELL INSTALLATION, SYSTEM OPERATION AND MAINTENANCE, AND SOIL, GROUNDWATER, AND AIR SAMPLING
Former Allison's Norge Village
120 Northeast Turner Street
Olympia, Washington

Submitted by:
Farallon Consulting, L.L.C.
975 5th Avenue Northwest
Issaquah, Washington 98027

Farallon PN: 663-010

For:
Mr. Wilbur Allison dba Allison's Norge Village Dry Cleaners
c/o Mr. David D. Cullen
West Hills Office Park
Building 11, 1800 Cooper Point Road Southwest
Olympia, Washington 98502

April 3, 2007

HEALTH AND SAFETY PLAN
REVIEW AND APPROVAL

Client: Mr. Wilbur Allison **Facility Name:** Former Allison's Norge Village
Project Name: Cleanup Action **Project Number:** 663-010
Start Date: December 4, 2006 **End Date:** December 31, 2007

Plan Expiration Date: May 1, 2007 (*Last day of expected fieldwork or no longer than 6 months*).

APPROVED BY:

Carla E. Brock
Project Manager _____ _____
Signature *Date*

Richard McManus
Office Health and Safety Coordinator _____ _____
Signature *Date*

Forest Reider
Site Health and Safety Officer _____ _____
Signature *Date*

John A. Schmitt
Site Health and Safety Officer _____ _____
Signature *Date*

J. Riley Conkin
Principal-in-Charge _____ _____
Signature *Date*

This Health and Safety Plan (HASP) was written for the use of Farallon Consulting, L.L.C. (Farallon) and its employees. It may be used also by trained and experienced Farallon subcontractors as a guidance document. However, Farallon does not guarantee the health or safety of any person entering this Site.

Due to the potentially hazardous nature of the site and the activities occurring thereon, it is not possible to discover, evaluate, or provide protection for all possible hazards that may be encountered. Strict adherence to the health and safety guidelines set forth herein will reduce, but does not eliminate, the potential for injury. The health and safety guidelines in this HASP were prepared specifically for this site, its conditions, purposes, dates of field work, and personnel, and must be amended if conditions change.

Farallon claims no responsibility for the use of this HASP by others. This HASP will provide useful information to subcontractors and will assist them in developing their own HASP, but it should not be construed as a substitute for their own HASP. Subcontractors should sign this HASP (see *Health and Safety Plan Acknowledgment and Agreement Form*, Attachment 1) as an acknowledgement of hazard information and as notice that this HASP does not satisfy their requirement to develop their own HASP.

CONTENTS

1.0 SCOPE OF WORK 1-1

2.0 BACKGROUND INFORMATION 2-1

3.0 DRUG AND ALCOHOL POLICY 3-1

4.0 WEAPONS POLICY 4-1

5.0 INCIDENT PREPAREDNESS AND RESPONSE 5-1

5.1 Health and Safety Preparedness 5-1

5.2 Injury or Illness 5-1

5.3 Reporting Procedures for Minor Cuts, Scratches, Bruises, etc. 5-2

5.4 Near Misses 5-2

5.5 Medical Incidents Not Requiring Ambulance Service 5-2

5.6 Emergency Cases Requiring Ambulance Service 5-3

5.7 Employee Death, or Hospitalization of Three or More employees 5-4

5.8 Response to Spills or Utility Breaches 5-4

5.9 Notifications 5-5

5.10 Shutoff Valves and/or Switches for Utilities and Products 5-5

6.0 EMERGENCY RESPONSE AND EVACUATION PLAN 6-1

7.0 LOCAL EMERGENCY CONTACT NAMES AND TELEPHONE NUMBERS 7-1

8.0 PROJECT PERSONNEL AND RELEVANT INFORMATION 8-1

9.0 POTENTIAL AIRBORNE CONTAMINANTS 9-1

10.0 POTENTIAL SITE HAZARDS AND APPROPRIATE PRECAUTIONS 10-1

10.1 Environmental Drilling 10-1

10.2 Monitoring Well Sampling/Gauging 10-7

10.3 Soil Vapor Extraction System Installation 10-9

10.4 Soil Vapor Extraction System Operation and Maintenance 10-12

11.0 WASTE CHARACTERISTICS 11-1

12.0 TRAFFIC CONTROL 12-1

ATTACHMENTS

Attachment 1 Health and Safety Plan Acknowledgement and Agreement Form

Attachment 2 Directions to Hospital

Attachment 3 Potential Topics for Daily Health and Safety Meeting

Attachment 4 Daily Health and Safety Briefing Log

Attachment 5 Incident Report Form

Attachment 6 Near Miss Report Form

Attachment 7 Utility Clearance Logs

Attachment 8 Air Monitoring Table and Forms

1.0 SCOPE OF WORK

This HASP was prepared for the use of Farallon personnel while performing the following tasks in accordance with the Draft Cleanup Action Plan, dated December 14, 2005 (CAP) and the Proposal to Implement the Cleanup Action Plan, dated April 11, 2006 (Proposal):

- Task 1: Environmental Drilling
- Task 2: Monitoring Well Sampling/Gauging
- Task 3: Soil Vapor Extraction System Installation
- Task 4: Soil Vapor Extraction System Operation and Maintenance

The tasks will be conducted in a manner consistent with the methods and assumptions outlined in the CAP and Proposal

2.0 BACKGROUND INFORMATION

The Site is located at 120 Northeast Turner Street in Olympia, Washington and covers an area of 0.37 acre. The property dimensions are approximately 150 feet from north to south by 100 feet from east to west. The Site currently is developed with a single-story brick masonry building located on the northwestern portion of the Site that was constructed in the early 1960s. The remaining Site areas are covered with asphalt. The building is developed with four separate suites that currently are occupied by Eastside Laundry, a barbershop, and an insurance broker. Eastside Laundry occupies the northern and southern suites. Dry cleaning operations commenced at the Site in the early 1960s, and continue to the present. Both historic and current dry cleaning operations have been located in the northern suite. According to Eastside Laundry, the southern suite is used only for laundry pick-up and drop-off.

Subsurface investigations conducted at the Site by Farallon and others have documented concentrations of tetrachloroethene (PCE) in soil and groundwater exceeding the Ecology Model Toxics Control Act Cleanup Regulation (MTCA), Chapter 173-340 of the Washington Administrative Code (WAC 173-340) Method A cleanup level due to dry cleaning operations at the Site. The results of the subsurface investigations were summarized in the CAP.

The data collected by Farallon were used to evaluate technically feasible remedial alternatives to clean up concentrations of PCE present in soil and groundwater at the Site in accordance with WAC 173-340-353. The selected cleanup action includes remediation of soil using soil vapor extraction (SVE) technologies combined with monitored natural attenuation for groundwater. Additional details pertaining to the evaluation of remedial alternatives are provided in the CAP.

3.0 DRUG AND ALCOHOL POLICY

It is Farallon's policy to maintain a drug-free workplace. Farallon has a responsibility to all of its staff members to provide a safe and inoffensive work environment, and a responsibility to its clients to provide accurate and consistent service. For these reasons, Farallon prohibits the following behavior by staff members in the field:

- Use of tobacco in any form by any person at any time in sensitive or hazardous areas that may pose a health and safety or environmental risk. The Site Health and Safety Officer (SHSO) may designate an area away from hazards that is safe for tobacco use;
- Possession or consumption of alcohol, or being under the influence of alcohol during field activities;
- Abuse of prescription and/or over-the-counter drugs in such a manner as to negatively impact performance or field safety; and
- Possession, use, sale, or being under the influence of illicit drugs while in the field or during any work hours.

Violation of any of the above codes of conduct is grounds for immediate removal from the project site and discipline in accordance with Farallon company policy. If an incident occurs as a result of an employee's actions, drug and alcohol testing will be performed in accordance with Farallon company policy.

4.0 WEAPONS POLICY

Farallon employees, contractors, subcontractors, and their employees working at the site are to ensure that they do not bring weapons onto the work site. Weapons include but are not limited to guns, knives, and explosives. Tools that are used during the course of field events, including but not limited to box knives, are exempt from this weapons policy. All vehicles and persons can be subjected to search while working at the property.

Failure to comply with the weapons policy can result in disciplinary action for the individual(s) involved in accordance with Farallon company policy.

5.0 INCIDENT PREPAREDNESS AND RESPONSE

Farallon employees and subcontractors working on site must be prepared to appropriately respond to an incident involving injury, illness, death, spills, or utility breaches. This section outlines the degree of preparedness required for employees at a work site, and describes the actions to be taken in the event of a health and safety incident.

5.1 HEALTH AND SAFETY PREPAREDNESS

All individuals working at the site are required to be familiar with the contents of this HASP. Additionally, the items on the following health and safety preparedness list should be reviewed prior to the commencement of work and during daily health and safety meetings:

- The directions to the hospital (provided in Attachment 2);
- The locations of first aid kits, personal eye washes, and fire extinguishers;
- The locations of the keys to site vehicles; and
- Hand sign language providing for the immediate stoppage of work (such as a horizontal hand movement in front of the neck).

Additional topics for daily health and safety meetings are included in Attachment 3, Potential Topics for Daily Health and Safety Meeting. Participation in daily health and safety meetings should be documented in the Daily Health and Safety Briefing Log (Attachment 4).

5.2 INJURY OR ILLNESS

If an injury or illness occurs, the following actions should be taken, regardless of the severity of the injury or illness:

- Stop work.
- Determine whether emergency response staff (e.g., fire, ambulance) are necessary. If so, dial 911 on a cell phone or the closest available telephone. Describe the location of the injured person and provide other details as requested. If an individual requires non-emergency medical care at a hospital, follow the directions to the nearest hospital, which are provided in Attachment 2. IF EMERGENCY MEDICAL CARE IS NEEDED CALL 911.
- Administer first aid to the individual immediately, using the first aid kit provided in the site vehicle. Use the bloodborne pathogens kit and personal eyewash, as needed.

- Notify the SHSO immediately. The SHSO is responsible for preparing and submitting an Incident Report form to Farallon's HSC within 24 hours of the incident, and for notifying the employee's supervisor and the Principal in Charge. The Incident Report form is provided in Attachment 5.

- ***All incidents must be reported to the HSC within 24 hours; however, the actual investigation need not be completed within 24 hours.*** **A telephone message that includes the date, time, and general incident circumstances should be left at one of the following numbers if the HSC cannot be reached directly:**
    - HSC work phone: (425) 295-0800
    - HSC cell phone: (425) 466-1032
    - If the HSC cannot be located contact the Principal-in-Charge.

- The SHSO will assume responsibility during a medical emergency until emergency response personnel arrive at the site.

5.3 REPORTING PROCEDURES FOR MINOR CUTS, SCRATCHES, BRUISES, ETC.

Every occupational illness or injury is to be reported immediately by the employee to the SHSO. The SHSO is to complete the Incident Report form provided in Attachment 5, and report the incident to the HSC.

5.4 NEAR MISSES

A near miss is defined as an incident in which no personal injury is sustained and no property damage is incurred, but where injury and/or property damage could have occurred under slightly different timing or location.

In the event of a near miss, the following actions are to be taken:

- Stop work.
- Report the near miss to an SHSO immediately.
- The SHSO is to report the near miss to the HSC and complete the Near Miss Report form in Attachment 6.
- Resume work upon satisfactory resolution of the near-miss condition and documentation of the corrective action(s) taken by the SHSO.

5.5 MEDICAL INCIDENTS NOT REQUIRING AMBULANCE SERVICE

Medical incidents not requiring ambulance services include injuries and conditions such as minor lacerations, and sprains. In the event of an injury, an illness, or a condition that does not require ambulance service, the following actions are to be taken:

- Stop work.

- Administer first aid as necessary to stabilize the individual for transport to the hospital.
- The SHSO is to facilitate prompt transportation of the individual to the hospital. Directions to the nearest hospital are provided in Attachment 2.
- A representative of Farallon or the subcontractor is to drive the individual to the medical facility and remain at the facility until the individual is able to return to the jobsite, or arrangements for further care have been established.
- If the driver is not familiar with the route to the hospital, a second person who is familiar with the route is to accompany the driver and the injured employee to the hospital.
- If it is necessary for the SHSO to accompany the injured employee to a medical facility, provisions must be made for another employee who is trained and certified in first aid to act as the temporary SHSO before work at the jobsite can resume.
- If the injured employee is able to return to the jobsite the same day, he/she is to bring a statement from the doctor that provides the following information:
  - Date of incident
  - Employee's name
  - Diagnosis
  - Date he/she is able to return to work, and whether regular or light duty
  - Date he/she is to return to the doctor for a follow-up appointment, if necessary
  - Signature and address of doctor
- The SHSO is to complete the Incident Report form provided in Attachment 5, and report the incident to the HSC.
- If the injured employee is unable to return to the jobsite the same day, the employee who transported him/her should bring the statement from the doctor back to the jobsite. The information on this statement should be reported to the HSC immediately.

5.6 EMERGENCY CASES REQUIRING AMBULANCE SERVICE

In the event of an injury or illness that requires emergency response and transport to a hospital by ambulance the following actions should be taken:

- **Dial 911** to request ambulance service.
- Notify the SHSO.
- Administer first aid until the ambulance service arrives.
- One designated company representative should accompany the injured employee to the medical facility and remain there until final diagnosis, treatment plan, and other relevant information has been obtained.
- The SHSO is to complete the Incident Report form provided in Attachment 5, and report the incident to the HSC immediately.

5.7 EMPLOYEE DEATH, OR HOSPITALIZATION OF THREE OR MORE EMPLOYEES

The procedures outlined in Section 6.2 should be followed in the event of an employee injury or illness. If an employee fatality occurs, the HSC, local emergency personnel and the coroner must be notified **immediately**. **The HSC will initiate the required State of Washington Deportment of Labor and Industries and Occupational Safety and Health Administration (OSHA) notifications within 8 hours of a fatality or the hospitalization of three or more employees.**

5.8 RESPONSE TO SPILLS OR UTILITY BREACHES

The location of underground utilities (e.g., product, sewer, telephone, fiber optic) and facilities (e.g., USTs, septic tanks, utility vaults) is to be noted prior to commencement of intrusive subsurface work activities. Use the public and private locate services as required and complete the Utility Clearance Log (Attachment 7). If a utility line or tank is breached or a spill or release occurs, the event is to be documented on the Incident Report form provided in Attachment 5 as soon as possible. The date, time, name of the person(s) involved, actions taken, and discussions with other affected parties are to be included. The SHSO, Project Manager (PM) and client are to be notified immediately. The PM is to notify the regulatory authority and/or utility company, as necessary.

In the event of a spill or release, the following actions should be taken:

1. Stay upwind of the spill or release.
2. Don appropriate personal protective equipment (PPE).
3. Turn off equipment and other sources of ignition.
4. Turn off pumps and shut valves to stop the flow or leak.
5. Plug the leak or collect drippings, when possible.
6. Use sorbent pads to collect the product and impede its flow, if possible.
7. Dial 911 or telephone the local fire department immediately if a fire or another emergency situation develops.
8. Inform the Farallon PM of the situation.
9. Determine whether the client would like Farallon to repair the damage or would rather use an emergency repair contractor.
10. Advise the client of spill discharge notification requirements, and establish who will complete and submit the required forms. ***Do not report or submit information to an agency without the client's consent.*** Document each interaction with the client and regulators, and note in writing names, titles, authorizations, refusals, decisions, and commitments to any action.

11. Do not transport or approve transportation of contaminated soils or product until proper manifests have been completed and approved. Be aware that soil and/or product may meet criteria for hazardous waste.

12. Do not sign manifests as a generator of wastes. Contact the PM to discuss waste transportation.

5.9 NOTIFICATIONS

A spill or release requires completion of an Incident Report form (provided in Attachment 5) per Farallon's Health and Safety program. **The PM must involve the client and/or generator in the incident reporting process. The client and/or generator is under obligation to report the incident to the appropriate government agency(ies). If the spill extends into waterways, the Coast Guard and the National Response Center must be notified immediately by the client or with his permission (800 424-8802).**

5.10 SHUTOFF VALVES AND/OR SWITCHES FOR UTILITIES AND PRODUCTS

Before starting work locate and list below the location of utility and product line shutoff valves and switches on the project site. Review the location of shutoff valves and switches with field personnel before beginning work.

The shutoff valves and/or switches for electrical, natural gas, gasoline, water lines, etc. are located:

_____

_____

_____

_____

6.0 EMERGENCY RESPONSE AND EVACUATION PLAN

Farallon personnel and subcontractors working on site are to be aware of site-specific emergency and evacuation procedures, including alarm systems and evacuation plans and routes. If an incident occurs that requires emergency response, such as a fire or spill, **CALL 911 and request assistance**. Farallon staff, subcontractors, and/or others working in an area where an emergency occurs are to evacuate to a safe location away from the incident area, preferably upwind, and take attendance.

For this project the emergency evacuation gathering location is:

- **Outside the Jiffy Lube, located across State Street to the north of the Site.**

If the emergency causes the route to be obstructed, Farallon personnel and subcontractors are to move to an open area upwind of the hazard area, and remain there until instructed by emergency response personnel (e.g., police, fire, ambulance personnel, paramedics) to do otherwise.

Subcontractors have the responsibility to account for their own employees and provide requested information to emergency response personnel immediately upon request. Farallon staff, subcontractors, and/or contractors may not reenter the scene of the emergency without specific approval from emergency response personnel.

7.0 LOCAL EMERGENCY CONTACT NAMES AND TELEPHONE NUMBERS

Local emergency response personnel can be contacted at the following numbers. Directions and a map to the hospital are included in Attachment 2.

Emergency Contact	Name and Location	Telephone No.
Hospital	Providence St. Peter Hospital 413 Lilly Road NE Olympia, Washington	**911** or (360) 491-9480
Police	City of Olympia Police Department 900 Plum Street SE Olympia, Washington	**911** or (360) 753-8300
Fire	Olympia Fire Department 100 Eastside Street NE Olympia, Washington	**911** or (360) 753-8348
National Response Center		**1-800-424-8802**
Washington State Department of Ecology		**(360) 407-6300**
Poison Control		**1-800-424-5555**

8.0 PROJECT PERSONNEL AND RELEVANT INFORMATION

Questions about this project that are posed by neighbors, the press, or other interested parties should be directed to the Principal in Charge at Farallon: (425) 295-0800.

Former Allison's Norge Village 663-010	General Project Responsibilities	Field Personnel Training Dates			Medical Surveillance Date
		40-Hour HAZWOPER	8-Hour Refresher	CPR/ First Aid	
Site Health and Safety Officer Forest Reider Cell: (425) 765-9988	Implement this HASP. Has authority to stop work. Perform air quality tasks. Take charge of all incidents. Review subcontractor's HASP.	5/2006	NA	10/2006	5/2006
Site Health and Safety Officer John Schmitt Cell: (425) 765-4655	Be familiar with HASP requirements and the Farallon Accident Prevention Program and Hazardous Waste Operations Program	5/2001	1/2006	10/2006	4/2006
Subcontractor-Project Manager, Saybr Contractors, Amanda Grindle Office: (253) 531-2144	Oversee work of own staff. Ensure that their own HASP is site-specific.	NA	NA	NA	NA
Subcontractor Personnel	Be familiar with HASP requirements				
Principal-in-Charge J. Riley Conkin Office: (425) 295-0800 Cell: (425) 417-4076	Provide immediate support upon notice of any incident.	NA	NA	NA	NA
Health and Safety Coordinator Richard McManus Office: (425) 295-0800 Cell: (425) 466-1032	Provide support in implementing HASP. Provide immediate support upon notice of any incident.	NA	NA	NA	NA
Client Contact David D. Cullen Office: (360) 786-6500	Provide known analytical data from work performed by others. Provide notice of site hazards. Provide access to site. Provide information regarding available emergency supplies at the site.	NA	NA	NA	NA

9.0 POTENTIAL AIRBORNE CONTAMINANTS

The potential airborne contaminants of concern in the immediate vicinity at the site are listed in the table on the following page. The table should be reviewed, and any questions directed to the SHSO.

POTENTIAL AIRBORNE CHEMICALS ON SITE FOR THIS PROJECT REVIEW THIS TABLE AND CONTACT THE SHSO WITH ANY QUESTION						
Chemical (or Class)	**OSHA PEL ACGIH TLV**	**Other Pertinent Limits**	**Properties**	**Routes of Exposure or Irritation**	**Acute Health Effects**	**Chronic Health Effects/ Target Organs**
Tetrachloroethene (Perchloroethylene)	PEL - 100 ppm TLV - 25 ppm	PEL Ceiling - 200 ppm TLV STEL – 100 ppm IDLH - 150 ppm NIOSH considers this compound to be a carcinogen	Colorless liquid with a mild, chloroform-like odor	Inhalation; skin absorption; ingestion; eye contact	Irritation to eyes, skin, nose, throat, respiratory system; nausea; flush face, neck; vertigo (an illusion of movement); dizziness; lack of coordination; headache; skin erythema (redness)	Somnolence (sleepiness, unnatural drowsiness); liver damage; potential occupational liver carcinogen. **Target Organs:** Eyes, skin, respiratory system, liver, kidneys, CNS

NOTES:
ACGIH = American Conference of Governmental Industrial Hygienists
AIHA = American Industrial Hygiene Association
AIHA WEEL = AIHA-set workplace environmental exposure limits
C = ceiling limit
CNS = central nervous system
CVS = cardiovascular system
IDLH = immediately dangerous to life or health
mg/m^3 = milligrams per cubic meter
NIOSH = National Institute for Occupation Safety and Health
OSHA = Occupation Safety and Health Administration
PEL = permissible exposure limit
ppm = parts per million
RBC = red blood cells
REL = recommended exposure limit set by National Institute for Occupational Safety and Health (NIOSH)
Skin = skin absorption
STEL = short-term exposure limit
TLV = threshold limit value set by ACGIH
TWA = time-weighted average

10.0 POTENTIAL SITE HAZARDS AND APPROPRIATE PRECAUTIONS

The following tables list potential hazards and appropriate precautions associated with planned field work:

10.1 ENVIRONMENTAL DRILLING

Job Steps	Personal Protective Equipment (PPE)	Potential Hazards	Critical Actions
Clear drilling locations	Reflective vest, steel-toed and -shank shoes, hard hat, safety glasses with side shields, and work gloves.	Traffic hazards Overhead or underground installations Product releases Property damage Occupant inconvenience	• Refer to Utility Clearance Log (**Attachment 7**). • Coordinate with Site Manger (or designee) to minimize potential conflicts. • Review proposed locations against available construction drawings and known utilities, tanks, product lines, etc. • Mark out the proposed borehole locations. • Call underground utility locating service for public line location clearance and obtain a list of utilities being contacted. If necessary, coordinate private line locator for private property. • Develop a traffic control plan with the client and local agencies, as applicable, which may include use of cones, barrier tape, jersey barriers, etc.
Mobilize with equipment/supplies suitable for drilling	Reflective vest, steel-toed and -shank shoes, hard hat, safety glasses with side shields, and work gloves.	Vehicle accident Lifting hazards Delay or improper performance of work due to improper equipment on site	• Begin each work day with tailgate safety meeting. • Follow safe driving procedures. • Employ safe lifting procedures. • Verify that subcontractors are aware of their responsibilities for labor, equipment, and supplies. • Review permit conditions.
Visually clear proposed drilling locations	Reflective vest, steel-toed and -shank shoes, hard hat, safety glasses with side shields, and work gloves.	Underground or overhead installations	• Complete Utilities and Structures checklist on the Utility Clearance Log (provided in **Attachment 7**) and adjust drilling locations as necessary.
Set up necessary traffic control	Reflective vest, steel-toed and -shank shoes, hard hat, safety glasses with side shields, and work gloves.	Struck by vehicle during placement Vehicle accident resulting from improper placement of traffic control equipment	• Use buddy system for implementing traffic control plan, such as setting out cones and tape to define the safety area.

Job Steps	Personal Protective Equipment (PPE)	Potential Hazards	Critical Actions
Assist with set up of rig	Reflective vest, steel-toed and -shank shoes, hard hat, safety glasses with side shields, and work gloves.	Vehicle accident during rig movement Damage caused by rig while accessing set-up location Contact with overhead installations Soft terrain Unexpected rig movement	• All staff should know the location of the kill switch for the drilling rig. • Verify a clear pathway to the drilling location, and clearance for raising mast. • Provide hand signals and guidance to the driver, as needed, to place rig. • Visually inspect rig (fire extinguisher on board, no oil or other fluid leaks, cabling and associated equipment in good condition, pressurized hoses secured with whip-checks or adequate substitute, jacks in good condition). • Use wooden blocks under jacks to spread load, if necessary. Chock wheels.
Set up exclusion zone(s) and work stations (drilling and logging and/or sample collection)	Reflective vest, steel-toed and -shank shoes, hard hat, safety glasses with side shields, and work gloves.	Struck by vehicle during setup Slip or fall hazards	• Implement exclusion zone set-up. Set up work stations with clear walking paths to and from rig. Use safety tape and cone(s).
Clear upper 5 feet of drilling location using post-hole digger or hand auger	Reflective vest, steel-toed and -shank shoes, hard hat, safety glasses with side shields, ear plugs or ear muffs, work gloves. Respirator with organic vapor cartridges, chemical-resistant gloves, chemical-resistant apron as required.	Back strain Exposure to chemical hazards Hitting an underground utility Repetitive motion	• Keep full-face respirator with organic vapor cartridges readily accessible. • Initiate air quality monitoring in accordance with the air monitoring protocol presented in **Attachment 8**. • Stand upwind to avoid exposure whenever possible. • Use the organic vapor monitor aggressively to track the airborne concentration of contaminants close to potential sources, such as the core when it is being raised from the hole, the core is opened, etc. • Evaluate any soil samples inside a resealable plastic bag at arm's length. DO NOT EVALUATE THE SAMPLE IN THE OPEN, IN ORDER TO AVOID UNNECESSARY EXPOSURE. • Use correct lifting techniques and tools. • Complete the Pre-Drilling section of the Borehole Clearance Review form.

Job Steps	Personal Protective Equipment (PPE)	Potential Hazards	Critical Actions
Drilling	Reflective vest, steel-toed and -shank shoes, hard hat, safety glasses with side shields, ear plugs or ear muffs, work gloves. Respirator with organic vapor cartridges, chemical resistant gloves, chemical resistant apron as required.	Back strain Heat or cold Eye injury Noise Exposure to chemical hazards Breaching an underground utility Trip or fall Equipment failure	• Stand clear of operating equipment. • Use correct lifting techniques. Monitor air quality in accordance with the air monitoring protocol presented in **Attachment 8**. Monitor drilling progress. • Keep work area clear of tripping or slipping hazards. • Perform periodic visual inspections of drill rig.
Collect samples in accordance with sampling plan	Reflective vest, steel-toed and -shank shoes, hard hat, safety glasses with side shields, ear plugs or ear muffs, work gloves. Respirator with organic vapor cartridges, chemical resistant gloves, chemical resistant apron as required.	Back strain Heat or cold Eye injury Noise Exposure to chemical hazards Breaching an underground utility Trip or fall Equipment failure	• Stand clear of operating equipment. • Use correct lifting techniques. Monitor air quality in accordance with the air monitoring protocol presented in **Attachment 8**. Monitor drilling progress. • Keep work area clear of tripping or slipping hazards. • Perform periodic visual inspections of drill rig.

Job Steps	Personal Protective Equipment (PPE)	Potential Hazards	Critical Actions
Manage cuttings	Reflective vest, steel-toed and -shank shoes, hard hat, safety glasses with side shields, ear plugs or ear muffs, work gloves. Respirator with organic vapor cartridges, chemical resistant gloves, chemical resistant apron as required	Back strain Heat or cold Eye injury Noise Exposure to chemical hazards Breaching an underground utility Trip or fall Equipment failure	• Stand clear of operating equipment. • Use correct lifting techniques. Monitor air quality in accordance with the air monitoring protocol presented in **Attachment 8.** Monitor drilling progress. • Keep work area clear of tripping or slipping hazards. • Perform periodic visual inspections of drill rig.
Backfill borehole	Reflective vest, steel-toed and -shank shoes, hard hat, safety glasses with side shields, ear plugs or ear muffs, work gloves. Respirator with organic vapor cartridges, chemical resistant gloves, chemical resistant apron as required	Back strain Trip hazards Eye injury from splashing or release of pressurized grout.	• Mix grout to specification and completely fill the hole. • Use proper lifting techniques. • Keep work area clear of tripping hazards. • Verify presence of and/or authorization by required grouting inspectors.
Develop well	Reflective vest, steel-toed and -shank shoes, hard hat, safety glasses with side shields, ear plugs or ear muffs, work gloves. Respirator with organic vapor cartridges, chemical resistant gloves, chemical resistant apron as required	Physical injury from mechanical failure, drill rig, or air compressor. Trip hazards. Exposure to contaminants. Electric shock.	• Verify that equipment is in good working order and that pressurized hoses are whip-checked. • Keep full-face respirator with organic cartridges readily accessible. • Keep work area orderly. • Any generators must be equipped with GFCI circuit.
Gauge water levels and product thickness in wells, where applicable	Reflective vest, steel-toed and -shank shoes, hard hat, safety glasses with side shields, ear plugs or ear muffs, work gloves. Respirator with organic vapor cartridges, chemical resistant gloves, chemical resistant apron as required	Back strain. Inhalation or dermal exposure to chemical hazards. Repetitive motion.	• Have full-face respirator with organic cartridges readily accessible. • Conduct air quality monitoring in accordance with the protocol presented in **Attachment 8.** • Maintain a safe distance from the well head. • Bend at knees rather than at the waist.

Job Steps	Personal Protective Equipment (PPE)	Potential Hazards	Critical Actions
Purge well(s) and collect purge water	Reflective vest, steel-toed and -shank shoes, hard hat, safety glasses with side shields, ear plugs or ear muffs, work gloves. Respirator with organic vapor cartridges, chemical resistant gloves, chemical resistant apron as required	Back strain. Inhalation or dermal exposure to chemical hazards. Slip or fall. Contaminated water spill.	• Use proper lifting techniques. • Use PPE, and adhere to air monitoring guidelines as presented in **Attachment 8.** • Keep work area clear of tripping or slipping hazards. • Store purge water in appropriate containers.
Collect groundwater samples in accordance with sampling plan	Reflective vest, steel-toed and -shank shoes, hard hat, safety glasses with side shields, ear plugs or ear muffs, work gloves. Respirator with organic vapor cartridges, chemical resistant gloves, chemical resistant apron as required	Cross-contamination. Back strain. Inhalation or dermal exposure to chemical hazards. Slip or fall. Improper labeling or storage of samples , Injury from broken sample bottle (cuts or acid burns).	• Decontaminate sampling equipment between each well (unless disposable). • Use proper lifting techniques. • Have full-face respirator with organic cartridges within 3-5 feet of working location, and readily accessible. • Label samples in accordance with sampling plan. • Keep samples stored in appropriate containers, at correct temperature, and away from work area. Handle bottles carefully.
Dispose of or store any purge water on site	Reflective vest, steel-toed and -shank shoes, hard hat, safety glasses with side shields, ear plugs or ear muffs, work gloves. Respirator with organic vapor cartridges, chemical resistant gloves, chemical resistant apron as required	Back strain. Exposure to contaminants.	• Use suitable equipment to transport water (e.g., pumps, drum dollies). • Have full-face respirator with organic cartridges within 3-5 feet of working location, and readily accessible. • Label storage containers properly, and locate in an isolated area away from traffic and other site functions. • Coordinate offsite disposal (where applicable).
Clean site; demobilize	Reflective vest, steel-toed and -shank shoes, hard hat, safety glasses with side shields, ear plugs or ear muffs, work gloves. Respirator with organic vapor cartridges, chemical resistant gloves, chemical resistant apron as required	Traffic. Lifting hazards.	• Use buddy system to remove traffic control, as necessary. Leave site clear of refuse and debris. Clearly mark or barricade any borings that need topping off or curing at a later time. Notify site personnel of departure, final well locations, and any cuttings and/or purge water left onsite. Use proper lifting techniques.
Package and deliver samples to laboratory		Back strain. Traffic accidents	• Handle and pack bottles carefully (e.g., bubble wrap bags). Use proper lifting techniques. • Apply safe driving practices.

Job Steps	Personal Protective Equipment (PPE)	Potential Hazards	Critical Actions
Typical work	Steel-toed and -shank shoes, hard hat, safety glasses with side shields, hearing protection, reflective safety vest, leather gloves for non-chemical aspects of work Chemical-resistant gloves and apron if chemical exposure is suspected	Weather-related incidents: automobile accidents, slips or falls.	• Check weather reports daily. Project visits are not to be performed during inclement weather. Sampling may be performed during light rain mist. Wear raincoats. • Drive at speed limit or less, as needed, to keep a safe distance from vehicle in front. Avoid short stops.
Typical work		Cold Stress.	• For temperatures below 40°F, adequate insulating clothing must be worn. If the temperature is below 20°F, workers will be allowed to enter a heated shelter at regular intervals. Warm, sweet drinks should be available. Coffee intake should be limited. • No one should begin work or return to work from a heated shelter with wet clothes. Workers should be aware of signs of cold stress, such as heavy shivering, pain in fingers or toes, drowsiness, or irritability. Onset of any of these signs is an indication that immediate return to a heated shelter is needed. • Refer to ACGIH TLV Booklet for section on Cold Stress.
Typical work		Heat Stress.	• Discuss health effects and symptoms during daily health and safety meetings. • Drink water regularly(at least one cup every 20-30 minutes, depending upon level of effort and the PPE worn). • Refer to ACGIH TLV booklet for heat stress guidance, especially regarding PPE, type of work and frequency of breaks. • Breaks should be taken in an area cooler than the work area. • Monitor temperature and relative humidity using WBGT meter.
No eating, drinking, or smoking on site No contact lenses to be worn on site No facial hair that would interfere with respirator fit			
A safety meeting is to be held every day, even if only one person is working on the project on a given day			• Topics are to always include the work scheduled for the day and restatement of hazards and the means to avoid them. Other topics may include sampling in general, and advances in technology and how they may be applied to the project. Use the *Daily Health and Safety Briefing Log* in **Attachment 4** to log the topics discussed.

10.2 MONITORING WELL SAMPLING/GAUGING

Job Steps	Personal Protective Equipment	Potential Hazard	Critical Actions
Mobilize with equipment/supplies suitable for sampling.	Reflective vest, steel-toed and -shank shoes, hard hat, safety glasses with side shields, ear plugs or ear muffs, work gloves.	Vehicle accident. Lifting hazards. Delay or unsafe performance of work due to lack of necessary equipment on site. Cross-contamination of wells.	Follow safe driving procedures. Use proper lifting techniques. Review work plan to determine equipment/supply needs. Verity that all sampling/gauging equipment has been decontaminated. Bring ice for sample storage. Review the HASP. Gather the necessary PPE.
Set up necessary traffic control.	Reflective vest, steel-toed and -shank shoes, hard hat, safety glasses with side shields, ear plugs or ear muffs, work gloves.	Struck by vehicle during placement. Vehicle accident as a result of improper traffic-control equipment placement.	Use buddy system for placing traffic control. Refer to the traffic control plan section of the HASP (which may include specific requirements based on encroachment permit).
Set up exclusion zone(s).	Reflective vest, steel-toed and -shank shoes, hard hat, safety glasses with side shields, ear plugs or ear muffs, work gloves.	Struck by vehicle. Slip or fall hazards to workers.	Face incoming traffic. Implement exclusion zone setup instructions of the HASP (e.g., barricades, caution tape, cones). Set up work area free of trip hazards.
Gauge water levels and product thickness (where applicable) in wells.	Reflective vest, steel-toed and -shank shoes, hard hat, safety glasses with side shields, ear plugs or ear muffs, work gloves. Respirator with organic vapor cartridges, chemical resistant gloves, chemical resistant apron as required	Back strain. Inhalation of, or dermal exposure to, chemical hazards. Repetitive motion.	Wear required PPE. Initiate air quality monitoring in accordance with the HASP. Maintain a safe distance from wellhead. Bend at knees rather than at waist.
Purge well(s) and collect purge water.	Reflective vest, steel-toed and -shank shoes, hard hat, safety glasses with side shields, ear plugs or ear muffs, work gloves. Respirator with organic vapor cartridges, chemical resistant gloves, chemical resistant apron as required	Cross-contamination. Back strain. Inhalation of, or dermal exposure to, chemical hazards. Slip or fall. Contaminated water spill.	Decontaminate purging equipment between each sampling location. Use proper lifting techniques. Use PPE and conduct monitoring in accordance with the HASP. Keep work area clear of tripping or slipping hazards. Store purge water in appropriate containers.

Job Steps	Personal Protective Equipment	Potential Hazard	Critical Actions
Collect samples in accordance with sampling plan.	Reflective vest, steel-toed and -shank shoes, hard hat, safety glasses with side shields, ear plugs or ear muffs, work gloves. Respirator with organic vapor cartridges, chemical resistant gloves, chemical resistant apron as required	Cross-contamination. Back strain. Inhalation of, or dermal exposure to, chemical hazards. Slip or fall. Improper labeling or storage. Injury from broken sample bottle (e.g., cut, or acid burn).	Decontaminate sampling equipment between each well (unless disposable equipment). Use proper lifting techniques. Use PPE in accordance with the HASP. Label samples in accordance with sampling plan. Keep samples stored in suitable containers, at correct temperature, and away from work area. Handle bottles carefully.
Dispose of or store purge water on site.	Reflective vest, steel-toed and -shank shoes, hard hat, safety glasses with side shields, ear plugs or ear muffs, work gloves. Respirator with organic vapor cartridges, chemical resistant gloves, chemical resistant apron as required	Back strain. Exposure to contaminants. Damage or injury from improper use of on-site treatment system equipment. Improper storage or disposal.	Use suitable equipment to transport water (e.g., pumps, drum dollies). Wear PPE in accordance with the HASP. Review any necessary instructions for use of on-site treatment systems. Label storage containers properly and locate in an isolated area away from traffic and other site functions. Coordinate off-site disposal, where applicable.
Clean site/demobilize	Reflective vest, steel-toed and -shank shoes, hard hat, safety glasses with side shields, ear plugs or ear muffs, work gloves.	Traffic. Safety hazard left on site. Lifting hazard.	Use buddy system to remove traffic control, as necessary. Leave site clear of refuse and debris. Notify business personnel of departure, and of any purge water left on site. Use proper lifting techniques.
Package and deliver samples to laboratory.		Bottle breakage. Back strain.	Handle and pack bottles carefully (e.g., bubble wrap bags). Use proper lifting techniques.

10.3 SOIL VAPOR EXTRACTION SYSTEM INSTALLATION

Job Steps	Personal Protective Equipment	Potential Hazard	Critical Actions
Mark out the proposed trenching and aboveground structure locations. Call utility service clearance. Coordinate private line locator for private property.	Reflective vest, steel-toed and -shank shoes, hard hat, safety glasses with side shields, ear plugs or ear muffs, work gloves.	Traffic hazards. Overhead and underground lines and installations. Electrocution. Explosion. Product release. Property damage. Interruption of utility services.	Review proposed location map before arriving on site. Refer to Borehole Clearance Review form and coordinate with Site Manager (or designee) to minimize potential conflicts. Contact utility service at least two full working days before drilling and/or digging. Identify utilities to be contacted. Review proposed locations against available construction drawings and known utilities, tanks, product lines, etc. Perform preliminary site visit, where possible.
Cut pavement.	Reflective vest, steel-toed and -shank shoes, hard hat, safety glasses with side shields, ear plugs or ear muffs, work gloves.	Traffic hazard. Contact with utilities. Eye injury from flying debris. Back strain when moving equipment. Noise. Underground lines.	Identify and barricade work area. Avoid underground installations. Wear eye and hearing protection. Use proper lifting techniques and assistance when moving equipment (lift gate on truck may be necessary). Watch traffic.
Excavate trench and equipment pad footprint, as necessary.	Reflective vest, steel-toed and -shank shoes, hard hat, safety glasses with side shields, ear plugs or ear muffs, work gloves.	Injury or accident from heavy equipment. Injury from damaging underground lines. Back strain. Collapse of trench onto workers. Vehicle or foot traffic hazards. Falling into open trench. Tripping hazards. Being struck by equipment. Noise. Potential chemical hazards.	Maintain a line of sight with vehicle operator. Use agreed-upon hand signals and work paths with operators. Hand-excavate and protect underground lines that are in immediate path of trench. Use proper lifting techniques, and back support when hand digging. Use shoring/benching/sloping of trench walls if workers will have head and shoulders below top of trench (always for >5 ft deep, but may be required for <5 feet also). Maintain adequate access/egress locations for workers in trench. Keep trench covered in non-active work areas and between work shifts. Heed vehicle backup alarm and establish eye contact with operator. Keep work area tidy.
Install GWE and/or SVE hose and piping.	Reflective vest, steel-toed and -shank shoes, hard hat, safety glasses with side shields, ear plugs or ear muffs, work gloves.	Collapse of trench onto workers. Vehicle or foot traffic hazards. Falling into open trench. Tripping hazards. Lifting hazards. Power tool hazards.	Use shoring/benching/sloping of trench walls if workers will have head and shoulders below top of trench (always for >5 feet deep, but may be required for <5 feet also). Maintain adequate access/egress locations for workers in trench. Keep trench covered in non-active work areas and between work shifts. Use proper lifting techniques. Keep work area tidy. Watch for traffic.

Job Steps	Personal Protective Equipment	Potential Hazard	Critical Actions
Pressure test piping (primary and secondary conduit, as required).	Reflective vest, steel-toed and -shank shoes, hard hat, safety glasses with side shields, ear plugs or ear muffs, work gloves.	Eye injury. Flying and loose debris. Noise.	Don't over pressurize piping (usually <10 psi). Verify security of end caps. Watch for traffic.
Install electrical line and conduit to well heads.	Reflective vest, steel-toed and -shank shoes, hard hat, safety glasses with side shields, ear plugs or ear muffs, work gloves.	Collapse of trench onto workers. Vehicle or foot traffic. Falling into open trench. Trip hazards. Lifting hazards. Power tool hazards.	Use shoring/benching/sloping of trench walls if workers will have head and shoulders below top of trench (always for >5 feet deep, but may be required for <5 feet also). Maintain adequate access/egress locations for workers in trench. Keep trench covered in non-active work areas and between work shifts. Use proper lifting techniques. Keep work area tidy. Watch for traffic.
Backfill and pave trench.	Reflective vest, steel-toed and -shank shoes, hard hat, safety glasses with side shields, ear plugs or ear muffs, work gloves.	Injury from heavy equipment. Leg or foot injury from compaction equipment. Accident or damage resulting from future subsidence. Traffic hazards. Noise.	Maintain a line of sight with equipment operators. Use agreed-upon hand signals. Wear suitable PPE during compaction. Perform compaction of backfill according to specifications. Watch for traffic.
Construct treatment equipment pad.	Reflective vest, steel-toed and -shank shoes, hard hat, safety glasses with side shields, ear plugs or ear muffs, work gloves.	Damage from heavy equipment. Trip hazards. Body position/lifting hazards. Traffic hazards. Noise.	Use agreed-upon hand signals with truck operator. Keep work area free of debris. Keep supplies orderly. Watch for traffic.
Place and attach major equipment components.	Reflective vest, steel-toed and -shank shoes, hard hat, safety glasses with side shields, ear plugs or ear muffs, work gloves.	Injury from transport equipment. Back strain when moving equipment. Injury from power tool use. Traffic.	Keep clear of equipment when large components are being set in place. Use mechanical assistance as needed to position equipment. Wear suitable PPE when bolting equipment to pad. Watch for traffic.
Connect GWE and/or SVE hose and piping and associated valves, sampling ports, and gauges.	Reflective vest, steel-toed and -shank shoes, hard hat, safety glasses with side shields, ear plugs or ear muffs, work gloves.	Eye or other injury from hand tool use. Body position/lifting hazards. Injury from power tool use. Traffic.	Wear standard PPE. Use proper lifting techniques. Watch for traffic.

Job Steps	Personal Protective Equipment	Potential Hazard	Critical Actions
Install electrical control panel, equipment wiring and conduit, and system controls.	Reflective vest, steel-toed and -shank shoes, hard hat, safety glasses with side shields, ear plugs or ear muffs, work gloves.	Electrical shock/electrocution. Fire from faulty wiring. Back strain when lifting panel into place. Injury from power tool use. Traffic.	Use lock-out/tag-out procedures to isolate main power supply. Do not perform electrical work in rain. Keep work surfaces dry, especially in standing locations. Use proper lifting techniques. Wear standard PPE. Watch for traffic.
Install fencing or other system enclosure.	Reflective vest, steel-toed and -shank shoes, hard hat, safety glasses with side shields, ear plugs or ear muffs, work gloves.	Back strain. Injury from power tool use. Tripping hazards. Traffic.	Use proper lifting techniques. Obtain assistance, as needed. Wear standard PPE. Keep fencing and other materials neatly stacked until ready for installation. Watch for traffic.
Place required labeling and signage.	Reflective vest, steel-toed and -shank shoes, hard hat, safety glasses with side shields, ear plugs or ear muffs, work gloves.	Emergencies from fire, or from rupture of piping or other containment structures. Traffic.	Indicate emergency contact and telephone Number. Clearly label emergency shut-off switch(es). Properly label any hazardous materials (e.g., H_2O_2, petroleum-collection containers) Watch for traffic.
Clean site. Demobilize. Secure system.	Reflective vest, steel-toed and -shank shoes, hard hat, safety glasses with side shields, ear plugs or ear muffs, work gloves.	Traffic hazards. Nuisance or safety hazard left on site. Lifting hazards.	Use proper lifting techniques. Watch for traffic. Leave site clean of refuse and debris. Notify business personnel of departure.

10.4 SOIL VAPOR EXTRACTION SYSTEM OPERATION AND MAINTENANCE

Job Steps	Personal Protective Equipment	Potential Hazard	Critical Actions
Mobilize with proper equipment/supplies for O&M.	Safety glasses or goggles, hard hat, steel-toed and -shank boots, hearing protection, gloves	Vehicle accident. Lifting hazards. Delay or improper performance of work due to improper equipment on site.	Follow safe driving procedures. Employ safe lifting procedures. Make sure subcontractors are aware of their responsibilities for labor, equipment, and supplies. Review HASP and permit conditions and gather necessary PPE.
Set up necessary traffic control.	Safety glasses or goggles, hard hat, steel-toed and -shank boots, hearing protection, gloves	Struck by vehicle during placement. Vehicle accident as a result of improper traffic control equipment placement.	Use buddy system for placing traffic control, if necessary. Reference traffic control plan section of HASP (may include specific requirements based on permits).
Unload and set up test equipment.	Safety glasses or goggles, hard hat, steel-toed and -shank boots, hearing protection, gloves	Struck by vehicle. Trip hazards. Accident when maneuvering equipment. Lifting hazard. Electrical hazard. Adverse impacts to station sales.	Place equipment away from pump islands or other high traffic areas. Store hoses and electrical cords neatly and protect with traffic control equipment (e.g., cones, barricades). Provide hand signals and guidance to driver, as needed, when placing testing equipment trailers or other large equipment. Visually inspect equipment (e.g., fire extinguisher on board/available on site, no damaged hoses or electrical lines, pressurized hoses secured with whip-checks or adequate substitute, all vapor and/or water hoses firmly connected, equipment grounded). Use proper lifting techniques. Use GFIC on generators or other electrical equipment; inspect cords.
Set up exclusion zone(s) and work station.	Safety glasses or goggles, hard hat, steel-toed and -shank boots, hearing protection, gloves	Struck by vehicle during setup. Slip/fall hazards.	Implement exclusion zone setup instructions of HASP. Set up work station with clear walking paths to all testing locations. Face oncoming traffic.
Gauge water levels and product thickness (where applicable).	Safety glasses or goggles, hard hat, steel-toed and -shank boots, hearing protection, gloves	Back strain, inhalation, or dermal exposure to chemical hazards. Repetitive motion. Eye injury from back pressure in wells. Traffic hazards.	Wear any additional PPE and initiate air quality monitoring in accordance with HASP. Maintain safe distance from wellheads. Bend at knees, rather than waist. Decontaminate equipment between measurements. Face oncoming traffic.

Job Steps	Personal Protective Equipment	Potential Hazard	Critical Actions
Commence performing O&M.	Safety glasses or goggles, hard hat, steel-toed and -shank boots, hearing protection, gloves	Explosion or fire. Trip hazards. Unauthorized release of contaminants. Eye injury from pressurized air or shrapnel from burst piping. Burn from heated piping or motors. Clothing caught on turning vanes on compressor and shaft. Exposure to contaminants (e.g., inhalation, dermal contact). Noise. Electrical hazards.	Follow equipment-specific operation instructions. Ensure that connections with barbed fittings on pressure gauges are secure. Be conscious of amount of torque placed on PVC connections to avoid breaking. Monitor pressure conditions; do not exceed pressure ratings for any component involved. Watch proximity to heated piping and contact with mufflers, motors, manifolds. Monitor influent vapor and oxygen concentrations, if applicable. Keep work area tidy and free of loose equipment. Monitor treatment system and collect data to ensure discharge is within permit parameters and capacity of any storage containers (e.g., concentrations, flow rates). Wear PPE in accordance with HASP (including ear protection, as necessary). Ensure lockout/tagout of all electrical equipment that may be handled. Use GIFC; inspect cords.
Shut down system (if necessary).	Safety glasses or goggles, hard hat, steel-toed and -shank boots, hearing protection, gloves	Unauthorized release of contaminants from back pressure. Eye injury from pressurized air or shrapnel from burst piping. Burn from heated piping or motors. Exposure to contaminants (e.g., inhalation, dermal contact).	
Collect samples in accordance with sampling plan.	Safety glasses or goggles, hard hat, steel-toed and -shank boots, hearing protection, gloves	Cross-contamination, improper sample labeling or storage, exposure to site contaminants. Repetitive motion. Cuts from colorimetric tubes. Body position.	Label samples in accordance with sampling plan. Keep samples stored in proper containers, at correct temperature, and away from work area. Perform air monitoring and wear proper PPE.
Store waste (e.g., water, carbon canisters) in accordance with site-specific requirements.	Safety glasses or goggles, hard hat, steel-toed and -shank boots, hearing protection, gloves	Back strain. Traffic hazard. Improper storage or disposal. If disposing through on-site treatment system, damage or injury from improper use of equipment.	Use proper equipment to transport waste containers (e.g., pumps, drum dollies). Have proper storage containment and labeling available on site. Place materials in isolated location away from traffic and other site functions. Label waste. Coordinate proper disposal off site (where applicable). Review instructions for use of on-site treatment systems.

Job Steps	Personal Protective Equipment	Potential Hazard	Critical Actions
Clean site/demobilize.	Safety glasses or goggles, hard hat, steel-toed and -shank boots, hearing protection, gloves	Traffic hazard. Lifting hazards. Safety hazard left on site.	Use buddy system, as necessary, to remove traffic control. Use proper lifting techniques. Leave site clean of refuse and debris. Notify station personnel of departure and location of any stored waste.

11.0 WASTE CHARACTERISTICS

Waste anticipated to be generated on the project site:

Type(s): ☒ Liquid ☒ Solid ☐ Sludge ☐ Other_____

The approximate volume for each anticipated waste stream:

Waste: Soil Approximate Volume: 200 tons

Waste: Groundwater Approximate Volume: 25 gallons/quarter

Characteristics:

☐ Corrosive ☐ Flammable/Ignitable ☐ Radioactive ☒ Toxic (F002; listed)

☐ Reactive ☐ Unknown ☐ Other *(specify)*

12.0 TRAFFIC CONTROL

Work on this project site will be performed in areas of uncontrolled traffic access. Traffic control/warning devices will be placed around the work area to prevent undesirable interface between pedestrian and automotive traffic and project workers and equipment. These devices may include:

- Cones
- Tubular markers
- Barricades
- Temporary fencing
- Barricade tape

The traffic control/warning devices will be placed around the work in such a way that traffic access is inhibited (i.e. place cones less than 8-feet apart so cars cannot easily drive through work area without moving a cone). Barricade tape or temporary fencing will be used to inhibit access to the work area in locations where pedestrians will be encountered.

ATTACHMENT 1
HEALTH AND SAFETY PLAN ACKNOWLEDGEMENT AND AGREEMENT FORM

HEALTH AND SAFETY PLAN
Former Allison's Norge Village
120 Northeast Turner Street
Olympia, Washington

Farallon PN: 663-010

HEALTH AND SAFETY PLAN ACKNOWLEDGMENT AND AGREEMENT FORM

(All Farallon and subcontractor personnel must sign)

This Health and Safety Plan (HASP) has been developed for the purpose of informing Farallon employees of the hazards they are likely to encounter on the project site, and the precautions they should take to avoid those hazards. Subcontractors and other parties at the site must develop their own HASP to address the hazards faced by their own employees. Farallon will make a copy of this HASP available to subcontractors and other interested parties to fully disclose hazards we may be aware of, and to satisfy Farallon's responsibilities under the Occupational Safety and Health Administration (OSHA) Hazard Communication standard. Similarly, subcontractors and others on site are required to inform Farallon of any hazards they are aware of or that their work on site might possibly pose to Farallon employees, including but not limited to Material Safety Data Sheets for chemicals brought on site. This plan should NOT be understood by contractors to provide information pertaining to all of the hazards that a contractor's employees may be exposed to as a result of their work.

All parties conducting site activities are required to coordinate their activities and practices with the project Site Health and Safety Officer (SHSO). Your signature below affirms that you have read and understand the hazards discussed in this HASP, and that you understand that subcontractors and other parties working on site must develop their own HASP for their employees. Your signature also affirms that you understand that you could be prohibited by the SHSO or other Farallon personnel from working on this project for not complying with any aspect of this HASP.

Name	Title	Signature	Company	Date

ATTACHMENT 2
DIRECTIONS TO HOSPITAL

HEALTH AND SAFETY PLAN
Former Allison's Norge Village
120 Northeast Turner Street
Olympia, Washington

Farallon PN: 663-010

Starting from: A Former Allison's Norge Village, 120 Turner St NE, Olympia, WA 98506-4657

Arriving at: B PROVIDENCE ST PETER HOSPITAL 413 Lilly Rd Ne, Olympia, WA

Distance: 1.9 miles **Approximate Travel Time:** 4 mins

Your Directions

1. Start at **120 TURNER ST NE, OLYMPIA** - go **< 0.1** mi
2. Turn L on **4TH AVE E** - go **0.6** mi
3. **4TH AVE E** becomes **MARTIN WAY E** - go **0.9** mi
4. Turn L on **LILLY RD NE** - go **0.4** mi
5. Arrive at **PROVIDENCE ST PETER HOSPITAL**



ATTACHMENT 3
POTENTIAL TOPICS FOR DAILY HEALTH AND SAFETY MEETING

HEALTH AND SAFETY PLAN
Former Allison's Norge Village
120 Northeast Turner Street
Olympia, Washington

Farallon PN: 663-010

POTENTIAL TOPICS FOR DAILY HEALTH AND SAFETY MEETING

- ☐ Emergency response plan, emergency vehicle (full of fuel) and muster point
- ☐ Route to medical aid (hospital or other facility)
- ☐ Work hours. Is night work planned?
- ☐ Hand signals around heavy equipment
- ☐ Traffic control
- ☐ Pertinent legislation and regulations
- ☐ Above- and below-ground utilities (energized or de-energized)
- ☐ Material Safety Data Sheets
- ☐ Reporting an incident: to whom, what, why, and when to report
- ☐ Fire extinguisher and first aid kit locations
- ☐ Excavations, trenching, sloping, and shoring
- ☐ Personal protective equipment and training
- ☐ Safety equipment and training
- ☐ Emergency telephone location(s) and telephone numbers (in addition to 911)
- ☐ Eye wash stations and washroom locations
- ☐ Energy lock-out/tag-out procedures. Location of "kill switches," etc.
- ☐ Weather restrictions
- ☐ Site security. Site hazards. Is special waste present?
- ☐ Traffic and people movement
- ☐ Working around machinery (both static and mobile)
- ☐ Sources of ignition, static electricity, etc.
- ☐ Stings, bites, large animals, and other nature-related injuries and conditions
- ☐ Working above grade
- ☐ Working at isolated sites
- ☐ Decontamination procedures (for both personnel and equipment)
- ☐ How to prevent falls, trips, sprains, and lifting injuries
- ☐ Right to refuse unsafe work
- ☐ Adjacent property issues (e.g., residence, business, school, daycare center)

ATTACHMENT 4
DAILY HEALTH AND SAFETY BRIEFING LOG

HEALTH AND SAFETY PLAN
Former Allison's Norge Village
120 Northeast Turner Street
Olympia, Washington

Farallon PN: 663-010

DAILY HEALTH AND SAFETY BRIEFING LOG

Date	
Start Time	
Issues Discussed	
1.	
2.	
3.	
4.	
5.	
Attendees	
Print Name	**Signature**
Meeting Conducted by	
Name (Site Health and Safety Coordinator)	**Signature**

ATTACHMENT 5
INCIDENT REPORT FORM

HEALTH AND SAFETY PLAN
Former Allison's Norge Village
120 Northeast Turner Street
Olympia, Washington

Farallon PN: 663-010

INCIDENT REPORT

NEAR MISS, ACCIDENTAL INJURY, OCCUPATIONAL ILLNESS, OR WORK PLACE INCIDENT

INCIDENT TYPE (TO BE COMPLETED BY HEALTH AND SAFETY COORDINATOR)			INCIDENT DATE
☐ FATALITY	☐ INDUSTRIAL NON-RECORDABLE	☐ SPILL/LEAK	☐ GENERAL LIABILITY
☐ LOST WORKDAY (LW)	☐ NON-INDUSTRIAL	☐ PRODUCT INTEGRITY	☐ CRIMINAL ACTIVITY
☐ LW RESTRICTED DUTY	☐ OFF-THE-JOB INJURY	☐ EQUIPMENT	☐ NOTICE OF VIOLATION
☐ OSHA MEDICAL OR ILLNESS WITHOUT LW	☐ MOTOR VEHICLE ACCIDENT	☐ BUSINESS INTERRUPTION	☐ NEAR MISS
☐ FIRST AID	☐ FIRE		

This report must be completed by the employee or Health and Safety Coordinator immediately upon learning of the incident The completed report must be reviewed and signed by a Farallon Principal within 24 hours of the incident, even if employee is not available to review and sign Employee or employee's doctor must submit a copy of the doctor's report, and any subsequent exams, to Richard McManus at Farallon within 24 hours of the initial exam After hours or weekends, telephone Mr McManus via cell phone: (425) 466-1032

EMPLOYEE INFORMATION

LAST NAME	FIRST NAME AND MIDDLE INITIAL	TITLE	DATE OF BIRTH

EMPLOYMENT STATUS ☐ FULL-TIME ☐ PART-TIME ☐ HOURLY-AS-NEEDED	LENGTH OF EMPLOYMENT
DATE OF INJURY OR ONSET OF ILLNESS (MM/DD/YYYY)	TIME OF EVENT OR EXPOSURE ☐ AM ☐ PM

INJURY OR ILLNESS INFORMATION

EXACT LOCATION OF INCIDENT (GEOGRAPHICAL LOCATION, FLOOR, BUILDING, ETC)

COUNTY	ON EMPLOYER'S PREMISES? ☐ YES ☐ NO

COMPLETE DESCRIPTION OF INCIDENT; INCLUDE SPECIFIC ACTIVITY AT TIME OF INCIDENT (e g , Lifting, Pushing, Walking)

DESCRIBE THE EQUIPMENT, MATERIALS, OR CHEMICALS THAT DIRECTLY HARMED THE EMPLOYEE (e g , the machine that the employee struck or that struck the employee; the vapor inhaled; the material swallowed; what the employee was lifting or pulling)

DESCRIBE THE SPECIFIC INJURY OR ILLNESS (e g , cut, strain, fracture, skin rash)

BODY PART(S) AFFECTED (e g , back, left wrist, right eye)

DATE EMPLOYER NOTIFIED	TO WHOM REPORTED

MEDICAL PROVIDER INFORMATION (e.g., hospital, doctor, clinic)

NAME AND ADDRESS OF MEDICAL CARE PROVIDER	TELEPHONE NO

TREATED IN EMERGENCY ROOM? ☐ NO ☐ YES	HOSPITALIZED OVERNIGHT AS INPATIENT? ☐ NO ☐ YES

INCIDENT REPORT, CONTINUED

SEVERITY OF INJURY OR ILLNESS	TIME LOSS (Check all that apply)	PHASE OF WORKDAY
☐ NO TREATMENT REQUIRED	☐ NO TIME LOSS	☐ PERFORMING NORMAL WORK DUTIES
☐ FIRST AID ONLY	☐ RETURN TO WORK THE NEXT DAY	☐ MEAL PERIOD
☐ MEDICAL TREATMENT	☐ RESTRICTED ACTIVITY:	☐ REST PERIOD
☐ FATALITY (ENTER DATE):	BEGIN DATE	☐ ENTERING/LEAVING
	RETURN DATE	☐ CHRONIC EXPOSURE
	☐ LOST WORKDAY, NOT AT WORK:	☐ OTHER (SPECIFY):
	BEGIN DATE	
	RETURN DATE	

MOTOR VEHICLE ACCIDENT			
		PROFESSIONAL DRIVER? ☐ YES ☐ NO	
TOTAL YEARS DRIVING	COMPANY VEHICLE? ☐ YES ☐ NO	VEHICLE TYPE	
NO OF VEHICLES TOWED	NO OF INJURIES	NO OF FATALITIES	

THIRD PARTY INCIDENTS		
NAME OF OWNER	ADDRESS	TELEPHONE NO
DESCRIPTION OF DAMAGE		
INSURANCE INFORMATION		
WITNESS NAME	ADDRESS	PHONE NO
WITNESS NAME	ADDRESS	PHONE NO

REVIEWED BY			
NAME (PRINT)	SIGNATURE	TITLE	DATE

ATTACHMENT 6
NEAR MISS REPORT FORM

HEALTH AND SAFETY PLAN
Former Allison's Norge Village
120 Northeast Turner Street
Olympia, Washington

Farallon PN: 663-010

NEAR MISS REPORT

This report is to be filled out by any employee involved in or witnessing a near miss. A near miss is an incident that did not result in any personal injury, property damage, or work interruption. It is a very important indicator of potentially harmful future accident.

Project No. _____ Project Name _____

Project Address _____

Date of incident: _____ Time: _____ ☐ AM ☐ PM

Exact location of incident _____

_____

Description of incident or potential hazard _____

_____

_____

_____

_____

_____

_____

_____

Corrective action taken _____

_____

_____

_____

_____

_____

_____

Employee Signature _____ Date _____

Printed Name _____

Supervisor Signature _____ Date _____

Printed Name _____

ATTACHMENT 7
UTILITY CLEARANCE LOGS

HEALTH AND SAFETY PLAN
Former Allison's Norge Village
120 Northeast Turner Street
Olympia, Washington

Farallon PN: 663-010

UTILITY CLEARANCE LOG

Project: _____ **Project Number:**_____

Location: _____ **Date:** _____

Instructions. This log must be completed by a Farallon staff member prior to any Farallon-directed excavation (e.g., test pit excavation) or drilling operations.

DRILLING OR EXCAVATION WORK MAY NOT PROCEED UNTIL UTILITY LOCATES HAVE BEEN COMPLETED.

(See One-Call Notification Procedure on Reverse Side of This Form)

Farallon is responsible for having underground utilities and structures located and marked when drilling or directing test pit excavation operations. Any drilling or excavation within two feet of a marked utility must be done with hand tools.

Owners of underground utilities are required by law to mark underground facilities on public and private property. Owners of underground utilities are **not required** to mark existing service laterals or appurtenances. Utility owners in Washington are required to subscribe to the one call service.

Private utility locate services must be hired to locate service laterals and other buried utilities (e.g., on-site electric distribution lines, irrigation pipes) on private property.

Remark after 10 days or maintain as appropriate.

Locate Check List

Map attached showing drilling or excavation sites and known utilities ☐

Attach copy of One-Call Utility Notification Ticket (http://www.searchandstatus.com/) ☐

One-Call Utility Notification Ticket Number:_____

Attach copy of Private Locate Receipt ☐

Photos taken of all excavation/drilling locations (Download to project file) ☐

Facility Contact/Manager Approval: Name_____ Signature_____

Utilities and Structures

Type	Utility Name	Public Utilities Marked	Private Utilities/Laterals Marked	How Marked[1]
Petroleum product lines				
Natural gas line				
Water line				
Sewer line				
Storm drain				
Telephone cable				
Electric power line				
Product tank				
Septic tank/drain field				
Other				

[1]Flags, paint on pavement, wooden stakes, etc

Electric **RED**	*Gas-Oil-Steam* **YELLOW**	*Comm-CATV* **ORANGE**	*Water* **BLUE/PURPLE**	*Sewer* **GREEN**	*Temp Survey* **PINK**

Farallon Consulting, L.L.C.

Field Team Leader_____ Date_____

ONE-CALL UTILITY LOCATE REQUEST PROCEDURE

THE ONE-CALL UTILITY LOCATE CENTER REQUIRES 48 HOURS TO MARK UTILITIES BEFORE YOU CAN DIG OR DRILL

In Washington Call 1-800-424-5555 In Oregon Call 1-800-332-2344

Washington state law requires that "before commencing **any** excavation" that the excavator or driller provide notice to all owners of underground utilities by use of the one-call locator service. Further, the law requires that the excavator/driller shall not dig/drill until all known utilities are marked. To fully comply with the law the following utility locate procedure is required:

1. **Call before you dig or drill** – Notify the One-Call Utility Notification Center (OCUNC) a minimum of two full business days before digging or drilling. Document your notification on a Utility Locate Telecon Form. Provide the following information (Bold indicates required information):
    a. **Your name, phone number, company name, mailing address, Farallon Account Number #25999**
    b. The name and phone number of an alternate contact person
    c. If the work is taking place within 10 feet of any overhead power lines.
    d. What type or work is being done.
    e. Who the work is being done for.
    f. The county and city the work is taking place in.
    g. **The address or the street where the work is taking place.**
    h. The nearest cross street.
    i. The distance and direction of the worksite from the intersection.
    j. **Marking instructions, (specific instructions as to where the work is taking place).**
    k. Township, range, section, and quarter section of the worksite.
2. **Record the utilities that will be notified** – OCUNC will tell you what utilities are on or adjacent to the site based on their database. Record the name of the utility on the reverse side of this form.
3. **Confirm the utilities notified have marked the utilities in the field** – Before digging or drilling walk the site and confirm that the utilities that were notified marked the utilities in the field.
4. **If a locate appears to be missing** – If a utility locate appears to be missing, and the utility has not notified you that there are no utilities in the area, call OCUNC and:
    a. **Provide the OCUNC locate number**
    b. **Clearly state which utility has not been marked. The call is being recorded.**
    c. **Ask for a contact at that utility.**

Electric	*Gas-Oil-Steam*	*Comm-CATV*	*Water*	*Sewer*	*Temp Survey*
RED	**YELLOW**	**ORANGE**	**BLUE/PURPLE**	**GREEN**	**PINK**

5. **Call contact(s) for missing utility(s)** – Call the contacts for missing utility locates and determine why no locate appears in field.
6. **Record reason(s) for missing locate(s)** – There may be reasons that locates do not appear in the field (e.g., no utilities are located on the site, utility has been abandoned). Record the reason given. IF THEY ARE LATE – YOU WAIT TO DRILL OR DIG. If the utility failed to mark within the required two days they are liable for delay costs.
7. **Hand dig within two feet** – When digging or drilling within two feet of any marked utility the utility must be exposed first by using hand tools.

Electric	*Gas-Oil-Steam*	*Comm-CATV*	*Water*	*Sewer*	*Temp Survey*
RED	**YELLOW**	**ORANGE**	**BLUE/PURPLE**	**GREEN**	**PINK**

FARALLON CONSULTING, L.L.C.
320 3rd Avenue NE
Issaquah, Washington
98027-3333

TELEPHONE CONVERSATION
Date:_____ **Time:**_____
Project Name:_____
Job No:_____
Phone No:1-800-424-5555 WA, 1-800-332-2344 OR
Prepared By/Initials: _____
Call: ☐ **Placed** ☐ **Received**

Contact/Title:_____

Agency/Region: One-Call Utility Notification Center

PROJECT:_____

1. Your name and the Farallon Account Number #25999_____

2. What is the type of work being conducted? (Environmental drilling, test pit excavation)

_____

3. Who is the property owner? _____

4. County and city were work is being done?_____

5. Address or street where work is taking place?_____

_____

_____

6. Nearest cross street?_____

7. Distance and direction of the worksite from the intersection?_____

8. Marking Instructions (Generally locate on entire site including rights-of-way and easements):_____

_____

_____

_____

9. What time and date will the locate be completed?_____

10. Utility Locate Request Number?_____

11. Utilities that will be notified?_____

_____

_____

_____

12. Any Overhead Concerns? No

cc: **Page** **of**

Note: Bold indicates required information

ATTACHMENT 8
AIR MONITORING TABLE AND FORMS

HEALTH AND SAFETY PLAN
Former Allison's Norge Village
120 Northeast Turner Street
Olympia, Washington

Farallon PN: 663-010

ACTION LEVEL TABLE FOR AIR MONITORING

The Air Monitoring table (following page) presents protocol for monitoring ambient air for constituents of concern and other parameters that may affect worker safety. Please note the following with respect to use of this table:

- The Level for Respirator Use indicates the concentration at which a respirator must be donned. It does not require that the job stop. The respirator is a piece of equipment that is to be used while determining why a concentration has reached that level. Implement engineering controls such as water mist, spray foam, plastic cover, etc. to reduce the concentration.

- The Level for Work Stoppage indicates the concentration at which work on the job must stop. Determine why a concentration has reached that level, and how it can be decreased. Site evacuation is not necessary at this level. Stopping work does not imply that the concentration level will decrease. Implement engineering controls to reduce the concentration; resume work when it is safe to do so.

- These values can be modified under particular site conditions and with specific knowledge of the contaminant(s). Should such conditions arise, contact Farallon's Health and Safety Officer, Richard McManus at (425) 295-0800.

AIR MONITORING

Chemical (or Class)	Monitoring Equipment	Task	Monitoring Frequency and Location	Level for Respirator Use	Level for Work Stoppage
Volatile Organic Vapors	Flame ionization detector (FID)/ photoionization detector (PID) as appropriate for chemicals of concern. Read manual to determine. Draeger Tube for vinyl chloride (Model 1/a; Part Number 67 28031) Draeger Tube for benzene (Model 0.5/a)	From start of mobilization to completion and demobilization	Sampling should be continuous during the project while disturbing potentially contaminated soil, uncovering and/or removing tanks and piping, or drilling —at least every 15 minutes in the breathing zone. Sample at the exclusion zone boundaries every 30 minutes. Continuously sample during each soil and groundwater sampling interval. If 10 parts per million (ppm) in breathing zone, collect a Draeger Tube for benzene and/or vinyl chloride (depending upon contaminants of concern).	20 ppm above background sustained in breathing zone for 2 minutes, and no benzene and/or vinyl chloride tube discoloration. If a color change appears on the tube for benzene or vinyl chloride at 10 ppm on FID/PID, don respirator. If no Draeger Tube is available, the level for respirator use is to be 5 ppm.	50 ppm above background in breathing zone and no vinyl chloride or benzene tube discoloration. Stop work if tube indicates > 1 ppm for benzene or vinyl chloride. If no Draeger Tube is available, stop work at 25 ppm.

AIR MONITORING EQUIPMENT CALIBRATION/CHECK LOG

Date	Instrument/ Model No.	Serial No.	Battery Check OK?	Zero Adjust OK?	Calibration Gas (ppm)	Reading (ppm)	Leak Check	Performed By	Comments

AIR MONITORING LOG

Date	Time	Location	Source/Area/ Breathing Zone	Instrument	Concentration/Units	Sampled by

APPENDIX F
WASTE DISPOSAL DOCUMENTS

CLEANUP ACTION PROGRESS REPORT
AUGUST 2006 TO AUGUST 2007
Allison's Norge Village (AKA Eastside Laundry)
120 Northeast Turner Street
Olympia, Washington
VCP # SW 0370

Farallon PN: 663-010

WASTE MANAGEMENT
18177 Cedar Springs Lane
Arlington, OR 97812
(541) 454-2030
(541) 454-3312 Fax

March 5, 2007

Farallon Consulting, L.L.C.
975 5th Avenue Northwest
Issaquah, WA. 98027

CERTIFICATE OF DISPOSAL

Waste Management, Inc. dba Columbia Ridge Landfill has received NON HAZARDOUS Waste material from Farallon Consulting, L.L.C.

Date of Disposal:	December 12 and December 14, 2006
Profile #:	16336CV
Total Tons:	27.28
Waste Type:	Contained in PCE Soil

I certify, on behalf of the above listed facility, that the above-described non hazardous waste was managed in compliance with all applicable laws.

Victoria McKinney
Special Waste Billing Dept.

From everyday collection to environmental protection, Think Green® Think Waste Management.

Printed on 100% post-consumer recycled paper.

CUSTOMER INVOICE SUMMARY REPORT

Invoice Date: 03/16/2007

Transactions from 12/01/2006 to 03/02/2007

Account # **0000241**

Customer Name **FARALLON CONSULTING**

Profile Number	PC Scale Ticket #	OWS Ticket #	Load Date	Tip Date	Container Number	Manifest Number	Tons		Ticket Total
16336CV									
	396015	628569	12/8/2006	12/12/2006	CWMU7452		9.25	$	1,309.47
	396336	628991	12/14/2006	12/14/2006	CWMU7164		18.03	$	1,593.64
Profile Total	**Profile Loads: 2**						**27.28**	**$**	**2,903.11**
Customer Total	**Customer Loads: 2**						**27.28**	**$**	**2,903.11**

Send payment and enclosed remittance advice to:

Waste Management
Columbia Ridge Landfill
PO BOX 78251
Phoenix, AZ 85062-8251

We thank you for your Business and Prompt Payment!

087306

WM Columbia Ridge Landfill
18177 Cedar Springs Lane
Arlington, OR 97812
(541)-454-2030

TICKET: 399847
DATE: 12/29/2006
TIME: 11:04 - 11:04
LOAD DATE: 12/15/2006
TIP DATE: 12/28/2006

CUSTOMER: SAYER CONTRACTORS
PROFILE: 16521CV / SAYER CONTRACTOR
TRUCK: 629070 TRAILER: CWMU7065
ORIGIN: OLY / OLYMPIA CONTAINER: CWMU7065
COMMENT:

P.O.: 629070
GROSS: 38260 LBS
TARE: 7780 LBS
NET: 30480 LBS
MANIFEST:

WASTE	NET/TONS	UNIT
TRANSUSPW / TRANS BY UNIT SPW (ST	1.00	U
LOC-U-SPW / LOCAL TRANS BY UNIT SPW	1.00	U
ECMP / ENV CLEAN UP SPW (ECP)	15.24	T
DELSPW / DELIVERY SPECIAL WASTE (ST	1.00	U

Driver: _____
IN: VICKY MCKINNEY B: ORARLI01FC

Weighmaster: _____
OUT: VICKY MCKINNEY B: ORARLI01FC

Oregon Waste Systems
A Waste Management Company
18177 Cedar Springs Lane
Arlington, Oregon 97812
(541) 454-2030

WASTE MANAGEMENT

05 DEC 28 PM 1:22

Nº 629070

DATE/TIME: _____
LOAD DATE: _____
CUSTOMER: Sayer Northwest Columbia
PROFILE NUMBER: 16521CV
TRUCK NUMBER: 629070
TRAILER/CONTAINER NUMBER: CWMU 7065
SEAL NUMBER: _____
CUSTOMER INVOICE NO.: _____

GROSS WEIGHT: 38260
TARE WEIGHT-TRACTOR: _____
TARE WGT.-TRAILER/CONTAINER: 7780
NET WEIGHT: 30480

GATEHOUSE: Ken
DRIVER: Dan
TRAIN ID: Olympia 14 ORIGIN: OLY
WASTE TYPE: "Petroleum Like" Dirt Soil
DISPOSAL: CM DC BU GRID SEGREGATE
REMARKS: _____

HAULER: _____

087307

WM Columbia Ridge Landfill
18177 Cedar Springs Lane
Arlington, OR 97812
(541)-454-2030

TICKET: 399848
DATE: 12/29/2006
TIME: 11:04 - 11:04
LOAD DATE: 12/25/2006
TIP DATE: 12/28/2006

CUSTOMER: SAYBR CONTRACTORS
PROFILE: 16521CV / SAYER CONTRACTOR
TRUCK: 629636 TRAILER: WMHU910204
ORIGIN: OLY / OLYMPIA CONTAINER: WMHU910204
COMMENT:

P.O.: 629636
GROSS: 34380 LBS
TARE: 8140 LBS
NET: 26240 LBS
MANIFEST:

WASTE	NET/TONS	UNIT
TRANSUSPW / TRANS BY UNIT SPW (ST	1.00	U
LOC-U-SPW / LOCAL TRANS BY UNIT SPW	1.00	U
ECMP / ENV CLEAN UP SPW (ECP)	13.12	T
DELSPW / DELIVERY SPECIAL WASTE (ST	1.00	U

Driver:
IN: VICKY MCKINNEY B: ORARLI01PC

Weighmaster:
OUT: VICKY MCKINNEY B: ORARLI01PC

Oregon Waste Systems
A Waste Management Company
18177 Cedar Springs Lane
Arlington, Oregon 97812
(541) 454-2030

WASTE MANAGEMENT

08 DEC 29 AM 10:19

Nº 629636

DATE:/TIME: _____
LOAD DATE: _____
CUSTOMER: Sayer Contractors / Allisons
PROFILE NUMBER: 16521CV
TRUCK NUMBER: 209703
TRAILER/CONTAINER NUMBER: WMHU 910 204
SEAL NUMBER: _____
CUSTOMER INVOICE NO.: _____

GROSS WEIGHT: 34380
TARE WEIGHT-TRACTOR: _____
TARE WGT.-TRAILER/CONTAINER: 8140
NET WEIGHT: 26240

GATEHOUSE: DM
DRIVER: Dan
TRAIN ID: use scale 2 ORIGIN: OX 951
WASTE TYPE: Contaminated Ice Soil
DISPOSAL: CM DC BU GRID SEGREGATE
REMARKS: _____

HAULER: _____

090153

WM Columbia Ridge Landfill
18177 Cedar Springs Lane
Arlington, OR 97812
(541)-454-2030

TICKET: 396683
DATE: 12/19/2006
TIME: 09:33 - 09:33
LOAD DATE: 12/18/2006
TIP DATE: 12/18/2006

CUSTOMER: SAYBR CONTRACTORS
PROFILE: 16521CV / SAYBR CONTRACTOR
TRUCK: 629185 TRAILER: CWMU8527
ORIGIN: OLY / OLYMPIA CONTAINER: CWMU8527
COMMENT:

P.O.: 629185
GROSS: 32240 LBS
TARE: 7780 LBS
NET: 24460 LBS
MANIFEST:

WASTE	NET/TONS	UNIT
TRANSUSPW / TRANS BY UNIT SPW (ST	1.00	U
LOC-U-SPW / LOCAL TRANS BY UNIT SPW	1.00	U
ECMP / ENV CLEAN UP SPW (ECP)	12.23	T
DELSPW / DELIVERY SPECIAL WASTE (ST	1.00	U

Driver: _____
IN: SARAH MASTRIONA B: ORARLI01PC

Weighmaster: _____
OUT: SARAH MASTRIONA B: ORARLI01PC

Oregon Waste Systems
A Waste Management Company
18177 Cedar Springs Lane
Arlington, Oregon 97812
(541) 454-2030

WASTE MANAGEMENT

08 DEC 18 AM 11:19

Nº 629185

DATE/TIME: _____
LOAD DATE: _____
CUSTOMER: Snyder Contractors / Albany
PROFILE NUMBER: 16521CV
TRUCK NUMBER: 629185
TRAILER/CONTAINER NUMBER: CWMU 8527
SEAL NUMBER: _____
CUSTOMER INVOICE NO.: _____

GROSS WEIGHT: 32240
TARE WEIGHT-TRACTOR: 7780
TARE WGT.-TRAILER/CONTAINER: 24460
NET WEIGHT: _____

GATEHOUSE: KL
DRIVER: Ric
TRAIN ID: Wagon 12 ORIGIN: Ex 251
WASTE TYPE: Contaminated in "not soil
DISPOSAL: CM DC BU GRID SEGREGATE
REMARKS: _____

HAULER: TD Veolia IV

090762

WM Columbia Ridge Landfill
18177 Cedar Springs Lane
Arlington, OR 97812
(541)-454-2030

TICKET: 400818
DATE: 01/03/2007
TIME: 10:11 - 10:11
LOAD DATE: 12/15/2006
TIP DATE: 01/02/2007

CUSTOMER: SAYER CONTRACTORS
PROFILE: 16521CV / SAYBR CONTRACTOR
TRUCK: 629072 TRAILER: CWMU7180
ORIGIN: OLY / OLYMPIA CONTAINER: CWMU7180
COMMENT:

P.O.: 629072
GROSS: 19700 LBS
TARE: 7780 LBS
NET: 11920 LBS
MANIFEST:

WASTE	NET/TONS	UNIT
TRANSUSPW / TRANS BY UNIT SPW (ST	1.00	U
LOC-U-SPW / LOCAL TRANS BY UNIT SPW	1.00	U
ECMP / ENV CLEAN UP SPW (ECP)	5.96	T
DELSPW / DELIVERY SPECIAL WASTE (ST	1.00	U

Driver: _____
IN: SARAH MASTRIONA B: ORARLI01PC

Weighmaster: _____
OUT: SARAH MASTRIONA B: ORARLI01PC

Oregon Waste Systems
A Waste Management Company
18177 Cedar Springs Lane
Arlington, Oregon 97812
(541) 454-2030

WASTE MANAGEMENT

OCT 10 2 PM 2:05

Nº 629072

DATE/TIME: _____
LOAD DATE: _____
CUSTOMER: Sayer Contractors
PROFILE NUMBER: 16521 CV
TRUCK NUMBER: 629 203
TRAILER/CONTAINER NUMBER: CWMU 7180
SEAL NUMBER: _____
CUSTOMER INVOICE NO.: _____

GROSS WEIGHT: 19700
TARE WEIGHT-TRACTOR: _____
TARE WGT.-TRAILER/CONTAINER: 7780
NET WEIGHT: 11920

GATEHOUSE: Sayer
DRIVER: _____
TRAIN ID: Legacy 14 ORIGIN: CR 95
WASTE TYPE: "Contaminated Soil"
DISPOSAL: _____ CM DC BU GRID SEGREGATE
REMARKS: _____
HAULER: _____

090763

WM Columbia Ridge Landfill
18177 Cedar Springs Lane
Arlington, OR 97812
(541)-454-2030

TICKET: 400819
DATE: 01/03/2007
TIME: 10:12 - 10:12
LOAD DATE: 12/23/2006
TIP DATE: 01/02/2007

CUSTOMER: SAYBR CONTRACTORS
PROFILE: 16521CV / SAYBR CONTRACTOR
TRUCK: 629540 TRAILER: WMHU910212
ORIGIN: OLY / OLYMPIA CONTAINER: WMHU910212
COMMENT:

P.O.: 629540
GROSS: 38100 LBS
TARE: 7500 LBS
NET: 30600 LBS
MANIFEST:

WASTE	NET/TONS	UNIT
TRANSUSPW / TRANS BY UNIT SPW (ST	1.00	U
LOC-U-SPW / LOCAL TRANS BY UNIT SPW	1.00	U
ECMP / ENV CLEAN UP SPW (ECP)	15.30	T
DELSPW / DELIVERY SPECIAL WASTE (ST	1.00	U

Driver: _____
IN: SARAH MASTRIONA B: ORARLI01PC

Weighmaster: _____
OUT: SARAH MASTRIONA B: ORARLI01PC

Oregon Waste Systems
A Waste Management Company
18177 Cedar Springs Lane
Arlington, Oregon 97812
(541) 454-2030

WASTE MANAGEMENT

Nº 629540

DT JAN 2 PM 5:57

DATE:/TIME: _____
LOAD DATE: _____
CUSTOMER: Sayber Contractors Illinois
PROFILE NUMBER: 16521CV
TRUCK NUMBER: 109 903
TRAILER/CONTAINER NUMBER: WMHU 910212
SEAL NUMBER: _____
CUSTOMER INVOICE NO.: _____

GROSS WEIGHT: 38100
TARE WEIGHT-TRACTOR: _____
TARE WGT.-TRAILER/CONTAINER: 7500
NET WEIGHT: 30600

GATEHOUSE: Lori
DRIVER: Ricar
TRAIN ID: Load 22 ORIGIN: CR 25/
WASTE TYPE: Contaminated Pit Soil
DISPOSAL: _____ (CM) DC BU GRID SEGREGATE
REMARKS: _____
1 hr demurrage
HAULER: _____

090873

WM Columbia Ridge Landfill
18177 Cedar Springs Lane
Arlington, OR 97812
(541)-454-2030

TICKET: 401178
DATE: 01/04/2007
TIME: 08:52 - 08:52
LOAD DATE: 12/15/2006
TIP DATE: 01/03/2007

CUSTOMER: SAYBR CONTRACTORS
PROFILE: 16521CV / SAYBR CONTRACTOR
TRUCK: 629071 TRAILER: CWMU7079
ORIGIN: OLY / OLYMPIA CONTAINER: CWMU7079
COMMENT:

P.O.: 629071
GROSS: 33440 LBS
TARE: 7780 LBS
NET: 25660 LBS
MANIFEST:

WASTE	NET/TONS	UNIT
TRANSUSPW / TRANS BY UNIT SPW (ST	1.00	U
LOC-U-SPW / LOCAL TRANS BY UNIT SPW	1.00	U
ECMP / ENV CLEAN UP SPW (ECP)	12.83	T
DELSPW / DELIVERY SPECIAL WASTE (ST	1.00	U

Driver:
IN: VICKY MCKINNEY B: ORARLI01PC

Weighmaster:
OUT: VICKY MCKINNEY B: ORARLI01PC

Oregon Waste Systems
A Waste Management Company
18177 Cedar Springs Lane
Arlington, Oregon 97812
(541) 454-2030

WASTE MANAGEMENT

Nº 629071

07 JAN 3 AM8:38

DATE/TIME:
LOAD DATE:
CUSTOMER: Sayber Contractors / Wilson
PROFILE NUMBER: 16521CV
TRUCK NUMBER: 629702
TRAILER/CONTAINER NUMBER: CWMU 7079
SEAL NUMBER:
CUSTOMER INVOICE NO.:

GROSS WEIGHT: 33440
TARE WEIGHT-TRACTOR:
TARE WGT.-TRAILER/CONTAINER: 7780
NET WEIGHT: 25660

GATEHOUSE: KK
DRIVER: Dan
TRAIN ID: Wedge 14 ORIGIN: OX 95
WASTE TYPE: Contaminated Soil
DISPOSAL: (CM) DC BU GRID SEGREGATE
REMARKS:

HAULER:

WASTE MANAGEMENT

Oregon Waste Systems

A Waste Management Company

18177 Cedar Springs Lane
Arlington, Oregon 97812
(541) 454-2030

No. 629539

DATE:/TIME: '07 JAN 4 AM 9:00

LOAD DATE:

CUSTOMER: Sayer Contractors/Illinois

PROFILE NUMBER: 16521 CV

TRUCK NUMBER: 707763

TRAILER/CONTAINER NUMBER: WMHU 910201

SEAL NUMBER:

CUSTOMER INVOICE NO.:

GROSS WEIGHT: 28800

TARE WEIGHT-TRACTOR:

TARE WGT.-TRAILER/CONTAINER: 8200

NET WEIGHT: 20600

GATEHOUSE: KR

DRIVER: Dan

TRAIN ID: Usgl 22 ORIGIN: OX 951

WASTE TYPE: "Contaminated" PCE Soil

DISPOSAL: (CM) DC BU GRID SEGREGATE

REMARKS:

HAULER:

WM Columbia Ridge Landfill
18177 Cedar Springs Lane
Arlington, OR 97812
(541)-454-2030

TICKET: 4012273
DATE: 01/05/2007
TIME: 09:04 - 09:04
LOAD DATE: 12/23/2006
TIP DATE: 01/04/2007

CUSTOMER: SAYER CONTRACTORS
PROFILE: 16521CV / SAYER CONTRACTOR
TRUCK: 629539 TRAILER: WMHU910201
ORIGIN: OLY / OLYMPIA CONTAINER: WMHU910201
COMMENT:

P.O.: 629539
GROSS: 28800 LBS
TARE: 8200 LBS
NET: 20600 LBS
MANIFEST:

WASTE	NET/TONS	UNIT
TRANSUSPW / TRANS BY UNIT SPW (ST	1.00	U
LOC-U-SPW / LOCAL TRANS BY UNIT SPW	1.00	U
ECMP / ENV CLEAN UP SPW (ECP)	10.30	T
DELSPW / DELIVERY SPECIAL WASTE (ST	1.00	U

Driver:
IN: SARAH MASTRIONA B: ORARLI01PC

Weighmaster:
OUT: SARAH MASTRIONA B: ORARLI01PC

090927

086929

WM Columbia Ridge Landfill
18177 Cedar Springs Lane
Arlington, OR 97812
(541)-454-2030

TICKET: 396386
DATE: 12/15/2006
TIME: 14:37 - 14:37
LOAD DATE: 12/12/2006
TIP DATE: 12/14/2006

CUSTOMER: SAYER CONTRACTORS
PROFILE: 16521CV / SAYER CONTRACTOR
TRUCK: 628819 TRAILER: CWMU7224
ORIGIN: OLY / OLYMPIA CONTAINER: CWMU7224
COMMENT:

P.O.: 628819
GROSS: 25580 LBS
TARE: 7780 LBS
NET: 17800 LBS
MANIFEST:

WASTE	NET/TONS	UNIT
ECMP / ENV CLEAN UP SPW (ECP)	8.90	T
LOC-U-SPW / LOCAL TRANS BY UNIT SPW	1.00	U
TRANSUSPW / TRANS BY UNIT SPW (ST	1.00	U
DELSPW / DELIVERY SPECIAL WASTE (ST	1.00	U

Driver:
IN: VICKY MCKINNEY B: ORARLI01PC

Weighmaster:
OUT: VICKY MCKINNEY B: ORARLI01PC

Oregon Waste Systems
A Waste Management Company
18177 Cedar Springs Lane
Arlington, Oregon 97812
(541) 454-2030

WASTE MANAGEMENT

'06 DEC 14 PM 1:12

Nº 628819

DATE:/TIME:
LOAD DATE:
CUSTOMER: Sayer Contractors
PROFILE NUMBER: 16521 CV
TRUCK NUMBER: 109 103
TRAILER/CONTAINER NUMBER: Cwmu 7224
SEAL NUMBER:
CUSTOMER INVOICE NO.:

GROSS WEIGHT: 25580
TARE WEIGHT-TRACTOR:
TARE WGT.-TRAILER/CONTAINER: 7780
NET WEIGHT: 17800

GATEHOUSE: Steve
DRIVER: Dan
TRAIN ID: Used Load ORIGIN: Axess
WASTE TYPE: "Regular" POE Sand
DISPOSAL: (CM) DC BU GRID SEGREGATE
REMARKS:

HAULER:

086930

WM Columbia Ridge Landfill
18177 Cedar Springs Lane
Arlington, OR 97812
(541)-454-2030

TICKET: 396388
DATE: 12/15/2006
TIME: 14:37 - 14:38
LOAD DATE: 12/13/2006
TIP DATE: 12/14/2006

CUSTOMER: SAYER CONTRACTORS
PROFILE: 16521CV / SAYER CONTRACTOR
TRUCK: 628896 TRAILER: CWMU7116
ORIGIN: OLY / OLYMPIA CONTAINER: CWMU7116
COMMENT:

P.O.: 628896
GROSS: 29260 LBS
TARE: 7780 LBS
NET: 21480 LBS
MANIFEST:

WASTE	NET/TONS	UNIT
DELSPW / DELIVERY SPECIAL WASTE (ST	1.00	U
TRANSUSPW / TRANS BY UNIT SPW (ST	1.00	U
LOC-U-SPW / LOCAL TRANS BY UNIT SPW	1.00	U
ECMP / ENV CLEAN UP SPW (ECP)	10.74	T

Driver: _____
IN: VICKY MCKINNEY B: ORARLI01PC

Weighmaster: _____
OUT: VICKY MCKINNEY B: ORARLI01PC

Oregon Waste Systems
A Waste Management Company
18177 Cedar Springs Lane
Arlington, Oregon 97812
(541) 454-2030

WASTE MANAGEMENT

Nº 628896

DATE/TIME: _____
LOAD DATE: 06 DEC 14:29
CUSTOMER: Sayer Contractors
PROFILE NUMBER: 16521CV
TRUCK NUMBER: 628896
TRAILER/CONTAINER NUMBER: CWMU
SEAL NUMBER: _____
CUSTOMER INVOICE NO.: _____

GROSS WEIGHT: 29260
TARE WEIGHT-TRACTOR: _____
TARE WGT.-TRAILER/CONTAINER: 7780
NET WEIGHT: 21480

GATEHOUSE: KK
DRIVER: Dan
TRAIN ID: Used to ORIGIN: OLY
WASTE TYPE: Contaminated Soil
DISPOSAL: CM DC BU GRID SEGREGATE
REMARKS: _____

HAULER: _____

090956

WM Columbia Ridge Landfill
18177 Cedar Springs Lane
Arlington, OR 97812
(541)-454-2030

TICKET: 401421
DATE: 01/05/2007
TIME: 14:31 - 14:31
LOAD DATE: 12/23/2006
TIP DATE: 01/04/2007

CUSTOMER: SAYER CONTRACTORS
PROFILE: 16521CV / SAYER CONTRACTOR
TRUCK: 629541 TRAILER: WMHU910213
ORIGIN: OLY / OLYMPIA CONTAINER: WMHU910213
COMMENT: v.401272

P.O.: 629541
GROSS: 36700 LBS
TARE: 7380 LBS
NET: 29320 LBS
MANIFEST:

WASTE	NET/TONS	UNIT
LOC-U-SPW / LOCAL TRANS BY UNIT SPW	1.00	U
ECMP / ENV CLEAN UP SPW (ECP)	14.66	T
DEMSPW / DEMURRAGE SPECIAL WASTE (	1.00	U
TRANSUSPW / TRANS BY UNIT SPW (ST	1.00	U
DELSPW / DELIVERY SPECIAL WASTE (ST	1.00	U

Driver: _____
IN: SARAH MASTRIONA B: ORARLI01PC

Weighmaster: _____
OUT: SARAH MASTRIONA B: ORARLI01PC

Oregon Waste Systems
A Waste Management Company
18177 Cedar Springs Lane
Arlington, Oregon 97812
(541) 454-2030

Nº 629541

DATE/TIME: 12/23/06 1643
LOAD DATE: 12/23/06
CUSTOMER: Sayer Contractors/Williams
PROFILE NUMBER: 16521 CV
TRUCK NUMBER: 629703
TRAILER/CONTAINER NUMBER: WMHU 910213
SEAL NUMBER:
CUSTOMER INVOICE NO.:

GROSS WEIGHT: 36700
TARE WEIGHT-TRACTOR:
TARE WGT.-TRAILER/CONTAINER: 7380
NET WEIGHT: 29320

GATEHOUSE: DW
DRIVER: Dennis
TRAIN ID: Weigh sta ORIGIN: OR 97
WASTE TYPE: Washington pet coke
DISPOSAL: CM DC BU GRID SEGREGATE
REMARKS:

1 hr. demurrage
HAULER: