Y-PAY-MOR CLEANERS IRAP
Federal Way, K. 2210 320th St. S.

December 22 1994
thry Febuary 7, 1994
NFA 10/20/1998

94

rec'd by Ecology
1/6/95

AGRA
Earth & Environmental

AGRA Earth &
Environmental, Inc.
11335 NE 122nd Way
Suite 100
Kirkland, Washington
U.S.A. 98034-6918
Tel (206) 820-4669
Fax (206) 821-3914

22 December 1994
11-07883-11

Mr. John Bickley
Director of Shopping Center Management
Northwest Building Corporation
801 Second Avenue, 1300 Norton Building
Seattle, Washington 98104

Attention: Mr. John Bickley

Subject: Independent Remedial Action Report (IRAP)
Former Y-PAY-MOR Drycleaners
2210 S. 320th Street
Federal Way, Washington

Dear Mr. Bickley:

AGRA Earth & Environmental, Inc. (AGRA) is pleased to submit the attached Independent Remedial Action Report (IRAP) for the former Y-PAY-MOR drycleaners. The report was prepared according to the Guidance on Preparing Independent Remedial Action Reports, Draft March 1, 1994, Under the Model Toxics Control Act (Chapter 70.105D RCW). The report is applicable to the Model Toxics Control Act Cleanup Regulations, Chapter 173-340 Washington State Administrative Code (WAC).

The Independent Remedial Action Program was initiated by Ecology on 1 July 1993. The program provides individuals conducting independent cleanups the option of having Ecology review reports documenting remedial actions. Ecology will provide a determination about the adequacy of the remedial actions conducted. After reviewing the report, Ecology will make a determination in written form which will address whether future remedial actions will be required. If the site receives a satisfactory review from Ecology, then the site could receive a "No Further Action" determination from Ecology and the site would be removed from the Hazardous Sites List. This program , as we have discussed, is appropriate to pursue especially since Northwest Building Corporation needs to lease the property and hence requires an expeditious review of the remedial actions conducted to date.

Ecology has informed us that the review process will take up to approximately 90 days. You will be notified and referenced of all communications with Ecology.

We appreciate the opportunity to offer our remediation and environmental services to Northwest Building Corporation. If you have any questions please do not hesitate to call.

Respectfully submitted,
AGRA Earth & Environmental, Inc.

Dale A. Kramer, M.Sc.
Project Scientist/Environmental Geologist

James S. Dransfield, P.E.
Senior Associate

INDEPENDENT REMEDIAL ACTION REPORT
FORMER Y-PAY-MOR DRY CLEANERS
BEST SHOPPING PLAZA
2210 320TH STREET SOUTH
FEDERAL WAY, WASHINGTON

Prepared For:

Northwest Building Corporation
1300 Norton Building
801 Second Avenue
Seattle, Washington 98104

Prepared By:

AGRA Earth & Environmental, Inc.
11335 NE 122nd Way, Suite 100
Kirkland, Washington 98034-6918

December 1994

File #11-07883-11

AGRA
Earth & Environmental

TABLE OF CONTENTS

11-07883-11

TABLE OF CONTENTS (Continued)
11-07883-11

TABLE OF CONTENTS (Continued)
11-07883-11

INDEPENDENT REMEDIAL ACTION REPORT **11-07883-11**
FORMER Y-PAY-MOR DRY CLEANERS
2210 320TH STREET SOUTH
FEDERAL WAY, WASHINGTON

1.0 PROJECT BACKGROUND/SITE DESCRIPTION

This report documents the results of an independent remedial action conducted at the former Y-PAY-MOR drycleaner. The report summarizes the activities conducted on the site by AGRA Earth & Environmental, Inc. (AGRA). The purpose of this report is to provide pertinent information in accordance with the Guidance On Preparing Independent Remedial Action Reports, Draft March 1994 (Model Toxics Control Act, Chapter 70.105D RCW).

The report contains two main sections. Section one of the report includes the following subsections: Release information/site characterization, previous investigations, selection of cleanup standards, remedial action taken and rationale. Section two of the report contains subsections including the groundwater investigation, regulatory records and permits, and hazardous substance management and handling practices.

A vapor extraction system (VES) was designed and installed at this site to recover tetrachloroethylene (PCE) from the subsurface. Vapor extraction was initiated on June 17, 1993. Samples collected on January 5, 1994 through September 20, 1994 suggest that further vapor extraction will not result in further significant reductions of PCE.

The vapor extraction system has been in operation for approximately one and a half years and as a result of decreasing rebound occurrences of vapor phase PCE the intention of this report is to cease remediation through "no further action."

AGRA is of the opinion that the subject site is eligible for no further remedial action status based upon:

1. Groundwater monitoring indicates that concentrations of PCE have not exceeded MTCA Method A and Method B cleanup levels;

2. Confirmation for remediation of soil PCE contamination indicates that one soil sample, of seven total, exceeded MTCA Method A cleanup for soil by 0.3 ppm PCE; and

3. Vapor extraction remediation of impacted soils has shown a trend towards asymptotic recovery levels ranging between 3.0 ppmv PCE and 13.0 ppmv PCE.

1.1 SITE LOCATION AND GENERAL CONDITIONS

The Site location map (Figure 1) shows the relative site location. The retail space was occupied by the former Y-PAY-MOR drycleaners from approximately November 25, 1985 to June 15, 1992. The retail space occupied by the former Y-PAY-MOR drycleaners is located

at 2210 S. 320th Street in Federal Way, Washington, in the eastern extreme of the Best Shopping Mall.

The retail space occupied by Y-PAY-MOR is bounded on the north, east, and south by parking area and easements. It is bounded to the west by the Living Well Lady, an aerobics facility.

Site catch basins (storm drains) are located at the northern portion of the site just outside the loading dock, and to the northeast and east (in parking lot) of the former drycleaner.
The subject site is currently unoccupied. The site has been unoccupied since approximately March 1992.

1.2 SITE TOPOGRAPHY AND GEOLOGY

Site topography is generally flat lying with topography increasing to the east. Approximately 18 feet of vertical rise occurs east from the former dry cleaner approaching 23rd Avenue South (Figure 1, Figure 6). There is approximately 15 to 18 feet of relief across the site, relative to 23rd Avenue South. The inside area of the former dry cleaner is capped with a concrete slab which averages seven inches in thickness.

The subject site soils consist of fill soils to approximately 5 to 6.5 feet below grade. The native soil horizon at approximately 6.5 foot depth consists of relict top soil of degraded grass and peat-like material underlain by weathered glacial till.

Dry to moist (unsaturated) soils interpreted as fill in the west-central area of the former dry cleaner exhibited, in the areas surveyed, tetrachloroethylene, and lesser amounts of trichloroethylene, and CIS-1,2 dichloroethene. Contamination exceeding MTCA method clean up levels appeared to occur between 2.5 feet and 6.5 feet depth interval. The 6.5 foot depth approximates the interpreted fill/native soil boundary. Concentrations of tetrachloroethylene, in soil, appeared to occur mainly in fill soils to 5 to 6.5 foot depth adjacent to the former equipment drain-line in the drain-line backfill.

2.0 RELEASE INFORMATION/SITE CHARACTERIZATION

2.1 Release Information

Ecology documented the release of PCE at the subject site on October 4, 1991 and August 8, 1991. Total volume of documented release on October 4, 1991 reported by Ecology was estimated to be 6 gallons of PCE. The volume of tetrachloroethylene "waste product" released on August 8, 1991 was not reported. The volume of the October 4, 1991 spill of approximately 99.9% PCE "waste product" was not reported. Estimates for total volume of PCE released in the two spills are approximately 11 gallons. Appendix F contains the release information documented by Ecology.

2.2 Site Characterization

The location of subsurface characterization conducted at the former drycleaners is depicted on Figure 2, the site characterization summary map. Figure 2 shows the location of all subsurface exploration locations including excavation, boring advancement, soil vapor survey, and vapor well/sparging well locations. Characterization and remedial investigation work was conducted in the spring and summer month's of 1992. Outlined below is a summary of those activities.

AGRA conducted initial emergency response subsurface assessment at the subject site on June 9, 1994. Our assessment included soil vapor survey, and soil boring advancement, soil sample collection and soil sample analysis.

AGRA's activities are described in our report entitled Preliminary Remedial Investigation (November 1992). This report is in Ecology files. The remedial investigation and feasibility study (RI/FS) was completed according to the guidance set forth in Washington Administration Code (WAC) 173-340-350.

AGRA conducted additional subsurface characterization at the subject site, on August 25 to 28, 1992 and October 28, 1992.

Soil analytical testing was conducted by EPA Method 8240 for soil sample testing. Analytical test results of all emergency response and remedial investigation soil sampling and associated analyses by EPA Method 8240 are summarized in Tables 1, 2A and 2B. Laboratory Analytical Certificates are located in Appendix B.

2.3 Soil Characteristics and Sampling

All exploration boring logs are included in Appendix A; the exploration logs are based on observations and interpretations in the field. Where pertinent, the exploration boring logs include diagrams depicting boring abandonment, vapor point installation and monitoring well construction.

Figure 3 contains soil cross section profiles keyed to EPA method 8240 analytical test results of soil samples obtained. The general trend illustrated by the soil profiles and characterization as a whole is that soil impacted by PCE and its breakdown products occurred mainly within the fill soils beneath the subject site.

The areas where soil Method A and Method B cleanup levels were exceeded is the area adjacent and south of the former drain line and the men's restroom in the west central portion of the former dry cleaning facility.

During our emergency response phase, four borings were advanced beneath the west-central area of the subject site to depths of approximately 20 feet. The approximate location of the four borings, borings BW-1 through BW-4, is shown on Figure 3. One boring (BW-2) was

completed as a 2 inch (ID) monitoring well identified as monitoring well MW-1. Monitoring well MW-1 was subsequently abandoned to 8 feet on August 28 1992 due to well separation at the stainless steel well screen/pvc interface. A stainless steel, slotted (.010 inch) vapor well was installed in the boring of former monitoring well MW-1 to approximately 8 foot depth.

Borings B-5 through B-12 were advanced into the soils to a depth of 5.5 to 8.0 feet. Fill soils encountered and sampled during drilling beneath the subject site consisted of moist, medium, dark grey silt to approximately 6.5 foot depth. As the 6.5 foot depth is approached, fill soils observed became, in general, increasingly organic-rich. Gravel and sand heterogeneities persist in these fill soils, with gravelly fill occurring in borings B-6 and B-7. Native soils observed ranged from medium dense grey sand and stiff to hard silt with varying amounts of sand and gravel heterogeneities.

The fill/native soil contact generally occurs between 5.0 and 6.5 feet beneath the former drycleaner. The native soils are interpreted to be weathered till grading vertically to non-weathered till. In general, soils consist of fill material and glacial till. The glacial till is a compact mixture of gravel and occasional cobbles in a clayey, silty, sandy matrix.

2.4 Vapor Recovery and Sparging Well Installation

Stainless steel (0.010 inch, slotted) vapor extraction well points were installed in borings BW-2 (former monitoring well MW-1), B-6, B-7, B-8, B-9 and B-10. The well points were installed to approximately 7.5 feet depth (the approximate fill/native soil contact). The 7.5 foot depth was selected as the target depth for the remediation system because the qualitative and quantitative concentrations of volatile organic compounds decreased markedly at the native soil/fill soil boundary. Appendix A contains vapor well completion logs.

2.5 Soil Vapor Survey

AGRA conducted a soil vapor survey on September 25 and 26, 1992 at the subject site. The approximate location of vapor points SVS-1 through SVS-4 which were advanced to approximately 10 feet are shown on Figure 2. A portable (field) gas chromatograph was utilized for this effort and hence no analytical test certificates are available.

A second soil vapor survey was conducted in April 1993, prior to remediation system start up. Tables 3A and 3B summarize soil vapor results. Analytical test certificates for the April 1993 soil vapor samples are located in Appendix B. Figure 2 shows the location of the soil vapor samples collected and analyzed for the September 1992 and April 1993 soil vapor survey.

The results of the soil vapor survey indicated that detectable concentrations of soil vapor PCE were located near the former drain line and the men's restroom in the west central portion of the former dry cleaning facility.

2.6 Ambient Air Monitoring

AGRA performed ambient air sampling within the former dry cleaner and in the adjacent aerobics facility. The aerobics facility and the former dry cleaner share a common wall (western wall). Air monitoring and testing was conducted from April 1993 through May 1993. The purpose of ambient air monitoring was to assess ambient air quality due to the presence of fill soil PCE contamination. Ambient air samples were analyzed for the following compounds:

Vinyl Chloride: Ambient air was monitored for vinyl chloride. Air quality samples were taken at Y-PAY-MOR and at Living Well Lady. Sampling was conducted with a personal sample pump. Air samples were drawn through a coconut shell charcoal tube at a rate of 1.0 L/min for no less than 1 hour. Sampling and analysis was conducted according to NIOSH Method 1007.

Tetrachloroethylene: Ambient air was also monitored for tetrachloroethylene. Monitoring tetrachloroethylene was conducted in both Living Well Lady and Y-PAY-MOR. Sampling for PCE was conducted with the use of passive badges packed with coconut shell charcoal and sampled from 1 to 2 hours. The testing and analysis was conducted per NIOSH Method 1003 and analyzed by Friedman & Bruya, Inc. by gas chromatography (FID). The reported results are ppm.

Appendix C contains ambient air monitoring summaries and ambient air monitoring analytical test results. Results indicated that PCE and vinyl chloride concentrations in ambient air were essentially below method detection limits.

2.7 Summary of Characterization Data

Residual phase and vapor phase components consisting mainly of tetrachloroethylene, with minor amounts of acetone, and trichloroethylene have impacted site soils. Predominant spatial distributions of residual and vapor phase impacted soils appears to occur in vadose zone (fill) soils, which extend 6.5 to 7.5 feet below the surface, in the west central portion of the former dry cleaner.

2.7.1 Soil Boring/Analyses for Confirmation

On 16 November 1994, AGRA returned to the site and drilled seven confirmation borings inside the former Y-PAY-MOR facility. The locations of these borings (CB-1 through CB-7) are depicted on Figure 2. The purpose of these borings was to assess soil remediation efficacy in the vicinity of the suspect source area. Each confirmation boring was advanced to an approximate depth of 5.0 to 6.5 feet below ground surface, and one soil sample was obtained at the terminus of each boring. The soil samples were submitted to AGRA's Portland laboratory for analysis of halogenated volatile compounds by EPA Method 8010. Analytical test results of soils analyzed for confirmation analysis are summarized in Table 5.

Soil samples obtained from confirmational boring B-1, B-2, and B-6 contained no detectable concentrations of halogenated volatiles. Concentrations of 0.11 ppm, 0.33 ppm, 71 ppm, and 0.75 ppm Cis-1,2, Dichloroethene were detected in soil samples obtained from confirmational borings B-3, B-4, B-5 and B-7, respectively. The soil sample from confirmational boring B-4 also contained 1.3 ppm PCE. The sample obtained from confirmational boring B-5 also contained 0.59 ppm T-1,2, dichloroethene.

3.0 PREVIOUS INVESTIGATIONS

To AGRA's knowledge the following are the only environmental reports for the subject property. We believe that Ecology possesses all the reports listed below:

- Preliminary Remedial Investigation
  RZA AGRA, Inc., November 1992

- Remediation System Installation
  RZA AGRA, Inc., October 1993

- Soil Vapor Extraction Remediation System - Performance Monitoring Report
  RZA AGRA, Inc., February 1994

4.0 SELECTION OF CLEANUP STANDARDS

The cleanup standards used for independent remedial actions summarized in this report were selected from the Model Toxics Control Act (MTCA) Method "A" cleanup guidelines. Method "B" MTCA formula values for the PCE degradation product (cis- 1,2 dichloroethylene) were selected from the 31 August 1994 MTCA cleanup levels and risk calculation (CLARC II) update.

The affected media on the subject site has been identified as soil containing concentration of chlorinated solvents common to dry cleaning operations.

5.0 REMEDIAL ACTION TAKEN AND RATIONALE

The following alternatives were investigated for costs, logistics and feasibility:

1. Impacted soils excavation;
2. Thin lift indoor soils remediation; and
3. Vapor extraction remediation.

AGRA selected vapor extraction as the remedial alternative. The Department of Ecology concurred with AGRA's remedial alternative selection incorporating vapor extraction as the remedial alternative of choice for the subject site. Appendix F contains a 21 October 1992 correspondence outlining Ecology's concurrence with the selection of vapor extraction as the remedial technology of choice at the subject site.

5.1 Remediation System Installation

This section describes the remediation system installation for the former dry cleaner. The system was installed during the months May 1993 through June 1993.

5.2 System Description

Figure 4 contains sheets G1, C1, C2 and M1, which detail the remediation system layout, vapor extraction well details, and the remediation compound, respectively. The volatile organic compounds were removed from several soil-vapor extraction wells using a vacuum blower. The air stream is treated by passing it through a steel moisture knockout tank to remove water, and possible liquid phase compounds. The air stream exits the tank and enters the suction of a regenerative vacuum blower and discharges to two activated carbon units of 1000lb capacity, each. The contaminant-free air exits the carbon units via a passive 4-inch diameter vent, measuring approximately 30 feet in height.

The system is also designed to allow for air injection into the subsurface through air sparging well VP-7. Well VP-7 is a combination 4" (ID) vapor extraction and air injection well. All other wells used for remediation system are two-inch stainless steel, 0.010-inch slotted, vapor extraction wells (VP-1, VP-2, VP-3, VP-4, VP-5, VP-6). VP-7 is a four-inch, 0.010-inch slotted, stainless steel well, with a two-inch insert "drop" pipe, placed in the lower section of the well and sealed with an inflatable packer. Air is injected to the subsurface using a high pressure regenerative blower located in the treatment compound, to the lower portion of the well. The air permeates through the vadose zone to enhance vapor partitioning.

5.3 Installation

In May of 1993 Beck Environmental Contracting installed a soil vapor extraction remediation system at the subject site. The system installation procedures were as follows:

- Concrete floor slab was sawcut by Cascade Sawcutting services, including all trenching areas and outside access holes for pipe termination in the treatment compound located on the northern end of building.

- Concrete was removed and stockpiled for testing and subsequent removal to landfill and/or recycling.

- Sand bedding and HPDE piping was placed in the trenches. All piping for air distribution line was thermally fused together at all joints and elbows.

- All vapor wells were manifolded into the piping network and terminated at the northern (outside) portion of the building in the treatment compound.

- Wells VP-2, VP-6, VP-1 were manifolded on one header as circuit VES-3 . Wells VP-3, VP-4, VP-5 were manifolded on one header as circuit VES-2 .

Independent vapor extraction and air injection lines were manifolded to VP-7 as VES-1 and Air, respectively (see Trench Details).

- VP-7 was installed by Beck Environmental Contracting. Piping was connected by RZA AGRA after fabrication of special adapters and fittings.

- The piping was covered with a sand bedding and cover and finished to existing slab grade with concrete.

- A steel platform was designed and built to hold remediation equipment. The platform was designed to place equipment on a level surface in the treatment compound area north of the building and west of the existing loading dock.

- Concrete finishing work was performed to satisfy contract agreements and to facilitate the use of the surface for flooring activities.

- Equipment for the air system was installed in the treatment compound and secured by a fenced enclosure. All wiring and power supply was installed and permitted by a licensed electrical contractor, Megara Electric Contractors.

- A controller with a gas monitoring unit was installed for safety and on-site display of emission levels. Independent motor starters for blowers were installed with all controls in weather-proof enclosures.

The vapor extraction system is designed to operate on a continuous basis. System overload and alarm protection are installed for complete system shut-down and manual reset. All components are weather-proof and designed for outside locations.

The following is a summary of equipment installed at the site:

Quantity	Description
1	Control panels: 230V, 50 amp, 1-phase
1	Steel Moisture Knockout Tank: 77 Gallon Capacity
1	Regenerative Vacuum Blower: 2HP, 230V, 1-phase
2	Activated Carbon Units: 1,000 lbs. carbon capacity
1	MSA Model 5100 Emissions Monitoring System
1	Regenerative High Pressure Blower: 1.5 HP, 230V, 1-phase
1	Power Meter/Distribution Panel
10 X 18	Fenced Enclosure with 2 gates

NOTE: See Figure 4, Sheet M1

5.4 System Startup

On 17 June 1993, after all equipment was placed and installation activities completed, the vapor extraction system was started. Each piping network for air extraction was equipped with vacuum pressure gauges and valves to balance the system flow. Initial system testing included system wiring check, equipment calibration and leak detection for vapors in the equipment compound area.

The system was engaged and readings were taken from influent and effluent sample ports. No air injection was applied to the subsurface at the initial startup. The following is a summary of initial system readings and operating conditions.

Description	Reading
Total System Vacuum	37 inches W.C.
VES-2	25 inches W.C.
VES-3	25 inches W.C.
OVM Readings Influent	170 ppm
OVM Readings Effluent	0 ppm
MSA 5100 Effluent	0 % LEL

The vapor extraction system incorporates a carbon adsorption unit in the process. This unit is for the extraction of chlorinated hydrocarbons in the air stream which may impact the surrounding ambient air environment. This adsorption process was employed to minimize the risk of potential adverse toxic emission impacts, if these emission were to be vented directly into the air.

5.5 Remediation System Monitoring

AGRA has periodically monitored the related efficiency of the remediation system since system startup on June 17, 1993.

5.6 Influent/Effluent Monitoring, Sampling and Results

All emissions from the vapor extraction unit are monitored and sampled at sample ports before (influent) and after (effluent) the carbon units (Figure M1). To date, a total of fifteen influent and effluent vapor samples have been collected and analyzed for PCE concentration by EPA Methods 8010 and 8015 per Washington Department of Ecology Guidelines.

Influent vapor PCE concentrations were approximately 130 μL/L PCE at the time of system startup on June 17, 1993. Vapor PCE concentration levelled to approximately 4.2 μL/L PCE on subsequent monitoring conducted on July 2, 1993, July 15, 1993, and August 26, 1993.

Our July 7, 1993 monitoring and subsequent analytical test results indicated that approximately 3.0 μL/L of PCE was bypassing the remediation systems carbon scrubbers. The bypassing problem was traced to back pressure caused by a 2-inch (ID) piping restriction between the carbon scrubbers and the effluent stack. The back pressure initially was reduced by decreasing total system vacuum pressures and most recently by installing a 4-inch (ID) line between the carbon scrubbers and the effluent stack.

Historical influent vapor monitoring test results are summarized in Table 4. The historical influent vapor monitoring test results are graphed on Figure 5. Historical effluent monitoring (post carbon scrubbing) has remained at or near non-detectable concentrations.

Figure 5 illustrates that rebound concentrations of vapor phase PCE has been minimal. The largest rebound concentration of rebound PCE has been 36 ppmv since initiation of remediation.

Appendix D contains VES influent monitoring laboratory analytical test certificates.

SECTION TWO
6.0 INTRODUCTION

This section of the report summarizes the groundwater investigation, and regulatory records and permits collected during characterization and remedial action at the subject site.

6.1 Groundwater Characteristics and Sampling

The hydrogeolgy of the site is probably controlled by undifferentiated, weathered, glacial till. Hence, conditions typical of perched groundwater probably exist. A perched water table occurs where a shallow low permeability stratum such as weathered till minimizes vertical gradients and causes groundwater to accumulate in a limited area above the confining stratum. This type of situation is typical of sites underlain by glacial till.

Although water resource data for the Federal Way area show some groundwater resource development for municipal use, our review of published geological and groundwater literature, as well as Washington State Department of Ecology (Ecology) water well records, indicates that currently there are no major developed groundwater resources within 1200 feet of the project site. These groundwater resources are within advance outwash sands below several tens of feet of glacial till.

The location of the on site groundwater monitoring wells is provided on Figure 6, the groundwater exploration map. Borings B-5 and B-11 were completed as 2" (ID) monitoring wells (referred to as monitoring wells MW-2 and MW-3, respectively). Monitoring well MW-2 is located approximately 85 feet east-northeast of the northeast corner of the former dry cleaner. Monitoring well MW-3 is located approximately 60 feet south-southwest of the front (south) entrance to the former drycleaner. Monitoring well MW-2 is located in an inferred hydrogeologic upgradient position, while monitoring well MW-3 is located in an inferred hydrogeologic downgradient position.

There is no monitoring well "MW-1"; monitoring well MW-1 was abandoned.

Based on groundwater level measurements obtained from monitoring wells MW-2 and MW-3, groundwater at the site lies approximately at 10.76 feet below the top of the casing in monitoring well MW-2 and 8.32 feet below the top of the well casing in monitoring well MW-3.

Cross sections depicting borings and groundwater monitoring wells MW-2 and MW-3 are shown in Figure 3, with groundwater depths noted at the time of drilling. Historical depth to groundwater measurements (prior to monitoring well purging and sampling) are listed in Table 6.

6.2 Groundwater Analytical Test Results

A groundwater monitoring and sampling program was initiated in September 1992. Groundwater samples obtained from MW-2 and MW-3 between September 1992 and November 1994 were submitted for analysis of volatile organic compounds by either EPA Method 8240 or EPA Method 601. Laboratory analyses indicated that levels of volatile organic compounds that were detected in the samples were below MTCA cleanup standards for all sampling events performed. Groundwater historical laboratory analytical data is presented in Table 6 and Figure 6, respectively. Groundwater laboratory analytical test certificates are presented in Appendix E.

6.3 Special Cased Boring

To obtain a groundwater sample from beneath the vicinity of the spill area, AGRA advanced a special cased boring B-12. The casing was a 13 inch (ID) steel casing which was installed through the site fill soils (vadose zone) to an approximate depth of 6.5 feet. Groundwater samples were collected from boring B-12 at an approximate depth of 12.5 feet below site grade, where groundwater first entered the boring.

Analytical test results of the groundwater collected from special cased boring B-12 detected tetrachloroethylene, CIS-dichloroethene, and acetone concentrations of 780 ppb, 29 ppb, and 19 ppb, respectively. A groundwater sample was collected and for analytical testing. The laboratory reported the sampled contained concentrations of 1700 ppb tetrachloroethylene (Table 4).

Groundwater monitoring of groundwater obtained from monitoring wells MW-1 and MW-2 has not exceeded Method A or Method B cleanup levels for PCE or its breakdown products throughout the four groundwater monitoring events.

7.0 REGULATORY RECORDS AND PERMITS

7.1 Spill Response Documentation

A copy of Washington Department of Ecology's Spill Response Documentation is included in Appendix F.

7.2 Puget Sound Air Pollution Control Agency Permitting

Permitting application requirements for Puget Sound Air Pollution Control Agency (PSAPCA) were completed in May 1993. PSAPCA issued the permit on 21 May 1993.

8.0 HAZARDOUS SUBSTANCE MANAGEMENT AND HANDLING PRACTICES

8.1 Hazardous Substance Identification and Quantities

AGRA and Ecology have requested disposal records from Safety Kleen Auburn for the former dry cleaner. The data has yet to be received. Once received, the data will be added to this report as an addendum.

8.2 On-site Treatment, Storage, and Disposal

Proper disposal profiling required AGRA to obtain representative composite samples of stockpiled soils, drummed soils and drummed purge water which remained from the former dry cleaner's site characterization and remediation activities. Samples were collected on 22

June 1993 and delivered to Northwest EnviroService, Inc. on 23 June 1993 for waste profiling.

Laboratory analysis of the waste materials indicated that, with the exception of the approximately 2 gallons of tetrachloroethylene (PCE) in a bucket, materials were not characteristic of dangerous waste according to Washington Administrative Code 173-303-090.

Stockpiled soils (which remained inside the former dry cleaning facility) were placed into 55-gallon drums and placed at this outside location. Miscellaneous construction debris, such as carpeting, clean sand and clean concrete, was loaded into a truck and disposed of at a local landfill. A six-foot, chain-link fence was placed around the drums and secured with a lock. The inside of the building was swept and all material associated with site characterization activities was removed. These activities were performed on 22 July 1993.

On 18 August 1993 AGRA observed Northwest EnviroService, Inc. remove the drummed materials from the subject property for disposal. The PCE in the 2-gallon bucket was placed in a 30-gallon labpack (overpack) pursuant to WAC 173-303-161. A total of 31 drums, including 30 55-gallon drums and a (1) 30-gallon drum were removed from the site and transported to Northwest EnviroService's facility in Seattle, Washington.

Appendix G of this report contains our report entitled Disposal of Soils and Purge water from the former Y PAY MOR Dry Cleaners.

Table 1: Emergency Response Soils Analytical Test Results; 10 June 1992
Y-Pay-Mor Dry Cleaners
Federal Way, Washington
AGRA Earth & Environmental, Inc Project No. 11-07883-11

Boring I.D.	Sample I.D.	Approximate Depth (ft)	Acetone (ppm)	trans-DCE (ppm)	cis-DCE (ppm)	TCE (ppm)	1,1,2,2-PCA (ppm)	PCE (ppm)	2-Butanone (ppm)	Methylene Chloride (ppm)
BW-1	-2	10	0.015	ND	TI	ND	ND	TI	ND	TI
BW-1	-3	15	TI	ND	ND	ND	ND	ND	ND	ND
BW-1	-4	20	TI	ND	NDF	ND	ND	ND	ND	A/FIB
BW-2	-1	5	A/FIB	5.6	3.9	7.5	3.1	>160	TI	A/FIB
BW-2	-2	10	TI	ND	ND	ND	ND	0.34	ND	A/FIB
BW-2	-3	15	0.017	ND	TI	ND	ND	0.055	ND	A/FIB
BW-2	-4	20	ND	ND	TI	ND	ND	>39	ND	A/FIB
BW-3	-1	5	0.047	ND	0.01	TI	ND	0.028	TI	A/FIB
BW-3	-2	10	0.021	ND	TI	TI	ND	TI	ND	A/FIB
BW-3	-3	15	ND	ND	ND	ND	ND	ND	ND	A/FIB
BW-4	-1	5	0.23	ND	0.066	ND	ND	0.013	0.032	0.011
BW-4	-2	10	0.019	ND	ND	ND	ND	ND	ND	A/FIB
BW-4	-3	15	TI	ND	ND	ND	ND	ND	ND	A/FIB
MTCA Cleanup Level			NA	NA	NA	0.05	NA	0.5	NA	0.5

Notes:

trans-DCE = trans-Dichloroethene.
cis-DCE = cis-1,2-Dichloroethene.
TCE = Trichloroethene.
1,1,2,2-PCA = 1,1,2,2-Tetrachlororethane.
PCE = Tetrachloroethene.
MTCA = Model Toxics Control Act.
ND = Compound was analyzed, but was below laboratory detection limit.
TI = Compound identified, is estimated below laboratory detection limit but not listed in Table 1.
A/FIB = Compound was analyzed and found in the associated blank as well as the sample.
> = Compounds in which concentration exceed the calibration range of the GC instrument.
7.5 = Shaded value indicates concentrations which exceed MTCA Method "A" cleanup level.
All analytes are covered under EPA Method 8240 for volatile organics. This method covers a broad scan of analytes.
Indicated above are the only analytes in the broad scan that were measured above the laboratory detection limit.
Analytes not shown, but covered under Method 8240 were below the laboratory detection for all samples.
All concentrations are expressed in parts per million (ppm).

Table 2A: Remedial Investigation Soils Analytical Test Results; 25 through 28 August 1992
Y-Pay-Mor Dry Cleaners
Federal Way, Washington
AGRA Earth & Environmental, Inc Project No. 11-07883-11

Boring I.D.	Sample I.D.	Approximate Depth (ft)	HNU Reading (ppm)	Acetone (ppm)	trans-DCE (ppm)	cis-DCE (ppm)	PCE (ppm)	2-Butanone (ppm)	Methylene Chloride (ppm)
B-5	S-4	10	3.3	0.018	ND	ND	ND	ND	0.026
B-5	S-8	20	2.2	A/FIB	ND	ND	ND	ND	A/FIB
B-6	S-2	5	5.2	0.012	ND	TI	0.062	ND	0.013
B-6	S-3	7.5	1.8	0.11	ND	TI	TI	A/FIB	0.021
B-7	S-2	5	8.0	0.077	TI	>240	>460	ND	0.008
B-7	S-3	7.5	3.7	0.15	ND	ND	ND	A/FIB	0.006
B-8	S-2	5	4.1	0.098	ND	TI	ND	ND	0.008
B-8	S-3	7.5	2.1	0.077	ND	ND	ND	ND	TI
B-9	S-2	5	2.4	0.12	ND	0.011	0.015	A/FIB	TI
B-9	S-3	7.5	2.4	0.17	ND	ND	ND	TI	TI
B-10	S-1	2.5	131	A/FIB	ND	ND	ND	ND	A/FIB
B-10	S-2	5	130	A/FIB	ND	TI	ND	TI	A/FIB
B-10	S-3	7.5	22	0.15	ND	ND	ND	TI	0.0008
MTCA Cleanup Level				NA	NA	NA	0.5	NA	0.5

Notes:

trans-DCE = trans-Dichloroethene.
cis-DCE = cis-1,2-Dichloroethene.
PCE = Tetrachloroethene.
MTCA = Model Toxics Control Act.
ND = Compound was analyzed, but was below laboratory detection limit.
TI = Compound identified, is estimated below laboratory detection limit but not listed in Table 1.
A/FIB = Compound was analyzed and found in the associated blank as well as the sample.
> = Compounds in which concentration exceed the calibration range of the GC instrument.
>460 = Shaded value indicates concentrations which exceed MTCA Method "A" cleanup level.
All analytes are covered under EPA Method 8240 for volatile organics. This method covers a broad scan of analytes. Indicated above are the only analytes in the broad scan that were measured above the laboratory detection limit. Analytes not shown, but covered under Method 8240 were below the laboratory detection for all samples.
All concentrations are expressed in parts per million (ppm).

Table 2B: Remedial Investigation Soils Analytical Test Results; 27 & 28 October 1992
Y-Pay-Mor Dry Cleaners
Federal Way, Washington
AGRA Earth & Environmental, Inc Project No. 11-07883-11

Boring I.D.	Sample I.D.	Approximate Depth (ft)	HNU Reading (ppm)	Acetone (ppm)	cis-DCE (ppm)	PCE (ppm)	2-Butanone (ppm)	Methylene Chloride (ppm)
B-11	S-3	7.5	3.9	0.053	ND	ND	ND	TI
B-11	S-5	12.5	4.2	ND	ND	ND	ND	ND
B-11	S-6	15	4.2	ND	ND	ND	ND	TI
B-12	S-1	2.5	450	ND	ND	1,700	ND	ND
B-12	S-2	5	250	ND	TI	11	TI	A/FIB
B-12	S-3	7.5	4.0	0.04	ND	0.007	ND	ND
B-12	S-3B*	10	4.0	0.021	ND	>1.2	ND	ND
B-12	S-4	12.5	4.1	ND	ND	ND	ND	ND
B-12	S-5	15	2.3	ND	ND	ND	ND	ND
MTCA Cleanup Level				NA	NA	0.5	NA	0.5

Notes:

cis-DCE = cis-1,2-Dichloroethene.
PCE = Tetrachloroethene.
MTCA = Model Toxics Control Act.
ND = Compound was analyzed, but was below laboratory detection limit.
TI = Compound identified, is estimated below laboratory detection limit but not listed in Table 1.
A/FIB = Compound was analyzed and found in the associated blank as well as the sample.
* = Reported as "S-36" by analytical testing laboratory.
> = Compounds in which concentration exceed the calibration range of the GC instrument.
1,700 = Shaded value indicates concentrations which exceed MTCA Method "A" cleanup level.
All analytes are covered under EPA Method 8240 for volatile organics. This method covers a broad scan of analytes.
Indicated above are the only analytes in the broad scan that were measured above the laboratory detection limit.
Analytes not shown, but covered under Method 8240 were below the laboratory detection for all samples.
All concentrations are expressed in parts per million (ppm).

Table 3A: Remedial Investigation Soil Vapor Survey Analytical Results
Y-Pay-Mor Dry Cleaners
Federal Way, Washington
AGRA Earth & Environmental, Inc. Project No. 11-07883-11

Vapor Survey Sample I.D.	Approximate Depth Vapor Collected (ft)	OVM Reading (ppm)	Calculated Relative Concentration PCE & A/TCE (ppm)
SVS-1A	6	387	1,400(PCE) & 670 (A/TCE)
SVS-1B	10	NM	830(PCE) & 620 (A/TCE)
SVS-2A	5	1,094	3,850(PCE) & 110 (A/TCE)
SVS-2B	8.5	1,000	520(PCE) & 140 (A/TCE)
SVS-3A	5	370	1,100(PCE) & 20 (A/TCE)
SVS-3B	8	38	2,900(PCE) & 0.8 (A/TCE)
SVS-4A	5	22	430(PCE) & 7(A/TCE)
SVS-4B	10	5.5	<0.3(PCE) & <0.1(A/TCE)

Notes:

PCE = Tetrachloroethene.
TCE = Trichloroethylene
A = Acetone
A/TCE = Represents calculated volume concentration of acetone/trichloroethyele components compared to GC standard.
NM = Not measured.
OVM used contained an 11.8 eV ionization potential lamp. OVM vapor reading was taken from soil vapor effluent immediately after withdrawing soil vapor sample.
All concentrations are expressed in parts per million (ppm).

Table 3B: Remedial Investigation Soil Vapor Survey Analytical Results
Y-Pay-Mor Dry Cleaners
Federal Way, Washington
AGRA Earth & Environemtnal, Inc. Project No. 11-07883-11

Soil Vapor Sample	Sample Date	PCE (ppm)	TCE (ppm)	Acetone (ppm)	V.C. (ppm)	PID Reading (ppm)
SVS-5	13-Apr-93	<1.0	<1.0	<1.0	1.0	0.0
SVS-6	13-Apr-93	<1.0	<1.0	<1.0	<1.0	0.0
SVS-7	13-Apr-93	7.0	<1.0	<1.0	<1.0	0.0
SVS-8	13-Apr-93	5.0	<1.0	<1.0	<1.0	0.0
SVS-9	13-Apr-93	<1.0	<1.0	<1.0	<1.0	0.0
SVS-10	16-Apr-93	<1.0	<1.0	<1.0	<1.0	0.0
SVS-11	16-Apr-93	1.0	<1.0	<1.0	<1.0	0.0
SVS-12	16-Apr-93	<1.0	<1.0	<1.0	<1.0	0.0
SVS-13	21-Apr-93	<1.0	<1.0	<1.0	<1.0	0.0
SVS-14	21-Apr-93	<1.0	<1.0	<1.0	<1.0	0.0
SVS-15	21-Apr-93	<1.0	<1.0	<1.0	<1.0	0.0
SVS-16	21-Apr-93	<1.0	<1.0	<1.0	<1.0	0.0

Notes:

PCE = Tetrachloroethylene.
TCE = Trichloroethylene
V.C. = Vinyl Chloride.
PID used contained an 11.8 eV ionization lamp. PID vapor reading was taken from soil vapor effluent immediately after withdrawing soil vapor sample.
All concentrations are expressed in parts per million (ppm).

Table 4: Historical Monitoring Summary: VES System
Y-Pay-Mor Dry Cleaners
Federal Way, Washington
AGRA Earth & Environmental, Inc. Project No. 11-07883-11

Date Recorded	Line/ Valve	PID (ppmv) Before Carbon Scrubbing	PID (ppmv) After Carbon Scrubbing	PCE (uL/L) Before Carbon Scrubbing
17-Jun-93	VES-3/VES-2/VES-1	78.0	0.0	130.0
02-Jul-93	VES-3/VES-2/VES-1	2.0	0.0	3.0
07-Jul-93	VES-3/VES-2/VES-1	2.0	0.0	4.0
26-Jul-93	VES-3/VES-2/VES-1	2.0	0.0	4.0
28-Sep-93	System Turned Off			
18-Oct-93	VES-3/System Turned On	128.0	0.0	100.0
03-Nov-93	VES-3/VES-2/VES-1	25.0	0.0	7.0/<1.0/NT
11-Nov-93	VES-3	75.0	0.0	83.0
30-Nov-93	VES-3	17.0	0.0	2.0
15-Dec-93	VES-3	9.1	0.0	NT
05-Jan-94	VES-3	5.5	0.0	10.0
25-Feb-94	VES-3	7.0	0.0	3.0
22-Apr-94	System Turned Off			
19-May-94	VES-3/System Turned On	14.0	0.0	13.0
01-Jul-94	System Turned Off			
01-Sep-94	VES-3/System Turned On	14.0	0.0	36.0
20-Sep-94	VES-3/System Turned Off	2.9	0.0	2.0

Notes:

PID utilized was equipped with an 11.8 eV lamp: calibrated with 100 ppm isobutylene standard gas.
System turned on; 18-Oct-93, 19-May-93 and 01-Sep-94.
NT = Not tested
Analytical Testing by EPA Method 601.
All concentrations are expressed in parts per million per volume (ppmv) or microliters per liters (uL/L).

Table 5: Summary of Confirmational Boring/Soil Analyses
Y-Pay-Mor Dry Cleaners
Federal Way, Washington
AGRA Earth & Environmental, Inc Project No. 11-07883-11

Sample I.D.	Date Collected	Depth Collected (ft)	OVM Reading (ppm)	cis-1,2-DCE (ppm)	PCE (ppm)	Methylene Chloride (ppm)
B-1/S-1	16-Nov-94	6.5 - 8.0	0.0	<0.1	<0.1	<0.1
B-2/S-1	16-Nov-94	5.0 - 6.5	0.0	<0.1	<0.1	<0.1
B-3/S-1	16-Nov-94	5.0 - 6.5	0.0	0.11	<0.1	<0.1
B-4/S-1	16-Nov-94	5.0 - 6.5	0.0	0.33	1.3	<0.1
B-5/S-1	16-Nov-94	6.5 - 8.0	0.0	71	<0.1	<0.1
B-6/S-1	16-Nov-94	5.0 - 6.5	0.0	<0.1	<0.1	<0.1
B-7/S-1	16-Nov-94	5.0 - 6.5	0.0	0.8	<0.1	<0.1
MTCA Method "A" Cleanup Level				NA	0.5	0.5
MTCA Method "B" Cleanup Level				800	NA	NA

Notes:

gw = 80 ppb
soil = 100 x gw = 100 x 80 = 8000 ppb
= 8 ppm

cis-1,2-DCE = cis-1,2-Dichloroethene
PCE = Tetrachlororethene
MTCA = Model Toxics Control Act.
OVM used contained an 11.8 eV ionization potential lamp. OVM vapor reading was taken from soil vapor effluent immediately after withdrawing soil vapor sample.
All analytes are cover under EPA Method 8010 for volatile organics. This Method covers a broad scan of analytes. Indicated above are the only analytes in the broad scan that were measured above the laboratory detection limit. Analytes not shown, but covered under Method 8010 were below the laboratory detection limit for all samples.
All concentrations are expressed in parts per million (ppm).

Table 6: Summary of Groundwater Analytical Test Results
Y-Pay-Mor Dry Cleaners
Federal Way, Washington
AGRA Earth & Environmental, Inc Project No. 11-07883-11

Sample I.D.	Date Collected	Depth to Water* (ft)	Acetone (ppb)	cis-DCE (ppb)	TCE (ppb)	PCE (ppb)	2-Butanone (ppb)	Methylene Chloride (ppb)
MW-2	23-Sep-92	10.90	ND	ND	ND	ND	ND	ND
	23-Sep-92	10.90	25	ND	ND	ND	ND	TI
	13-Jun-94	10.66	ND	ND	ND	ND	ND	ND
	17-Nov-94	10.59	NT	ND	ND	ND	NT	ND
MW-3	28-Oct-92	8.56	ND	7	TI	TI	ND	ND
	13-Nov-92	8.15	ND	6.6	2.3	ND	ND	ND
	13-Nov-92	8.15	ND	9.0	ND	2.0(J)	ND	TI
	13-Jun-94	8.12	ND	5.4	ND	ND	ND	ND
	17-Nov-94	8.63	NT	2.2	ND	ND	NT	ND
B-12	28-Oct-92	12.50	19	29	TI	>780	TI	TI
	28-Oct-92	12.50	ND	ND	ND	1,700	ND	ND
MTCA Method "A" Cleanup Level			NA	NA	5.0	5.0	NA	5.0
MTCA Method "B" Cleanup Level			NA	80.0	NA	NA	NA	NA

Notes:

cis-DCE = cis-1,2-Dichloroethene
PCE = Tetrachlororethene
TCE = Trichloroethene
MTCA = Model Toxics Control Act.
ND = Compound was analyzed, but was below laboratory detection limit.
TI = Compound identifed, is estimated below laboratory detection limit but not listed in Table 5.
> = Compound in which concentration exceed the calibration range of the GC instrument.
* = Measured from top of mointoring well casing.
1,700 = Shaded value indicates concentrations which exceed MTCA Method "A" cleanup level.
(J) = Estimated value.
All analytes are cover under EPA Method 8240 for volatile organics. This Method covers a broad scan of analytes.
Indicates above are the only analytes in the broad scan that were measured above the laboratory detection limit.
Analytes not shown, but covered under Method 8240 were below the laboratory detection limit for all samples.

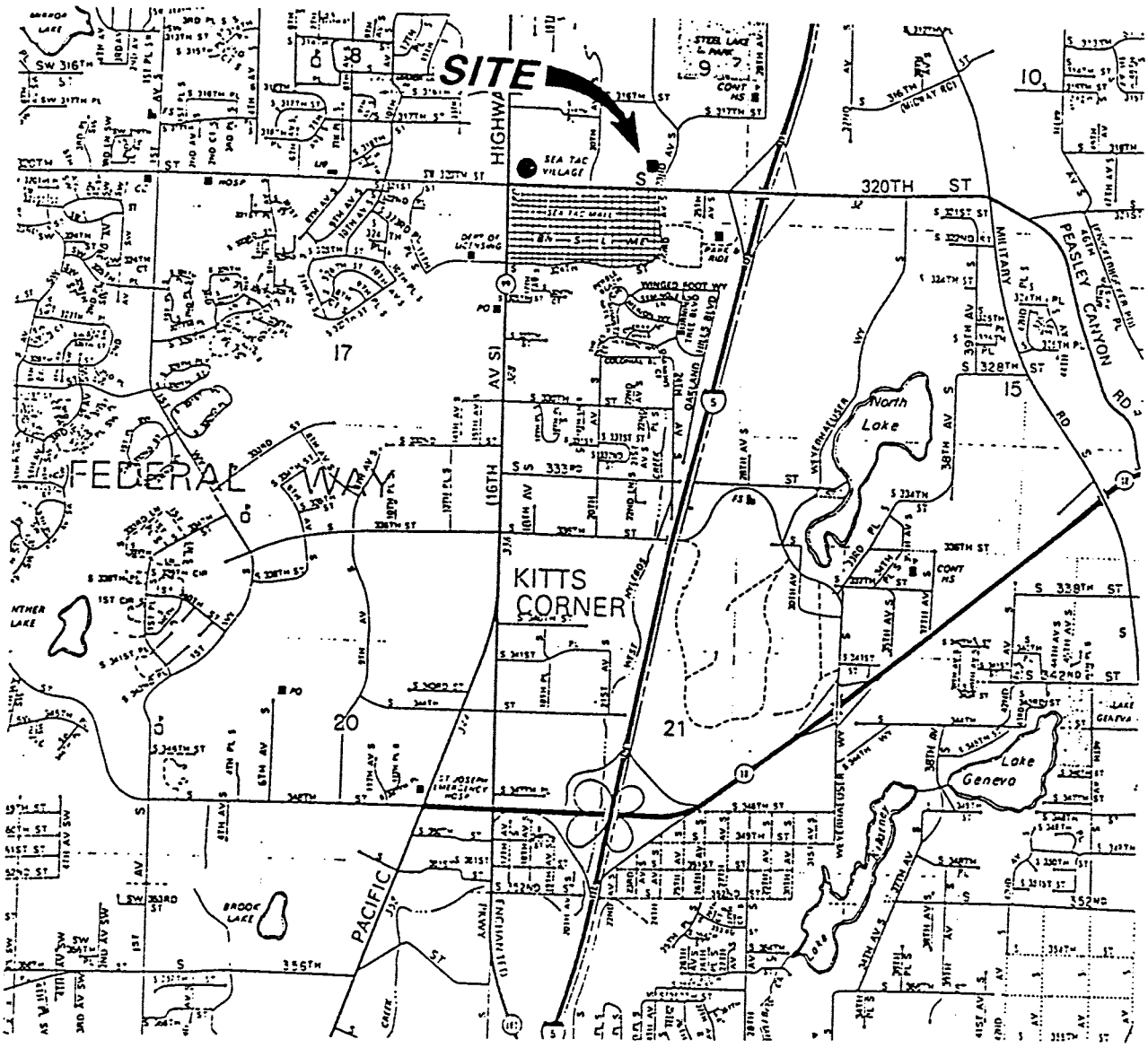

FIGURE 1

AGRA
Earth & Environmental
11335 N.E. 122nd Way, Suite 100
Kirkland, WA, U.S.A. 98034-6918

W.O.	11-07883-11
DESIGN	DAK
DRAWN	JMR
DATE	DEC 1994
SCALE	N.T.S.

Y-PAY-MOR DRY CLEANERS
2210 SW 320TH STREET
FEDERAL WAY, WASHINGTON

LOCATION MAP

AGRA EARTH & ENVIRONMENTAL, INC. DRAWING NO. \11\07883-11\LOCATION.DWG

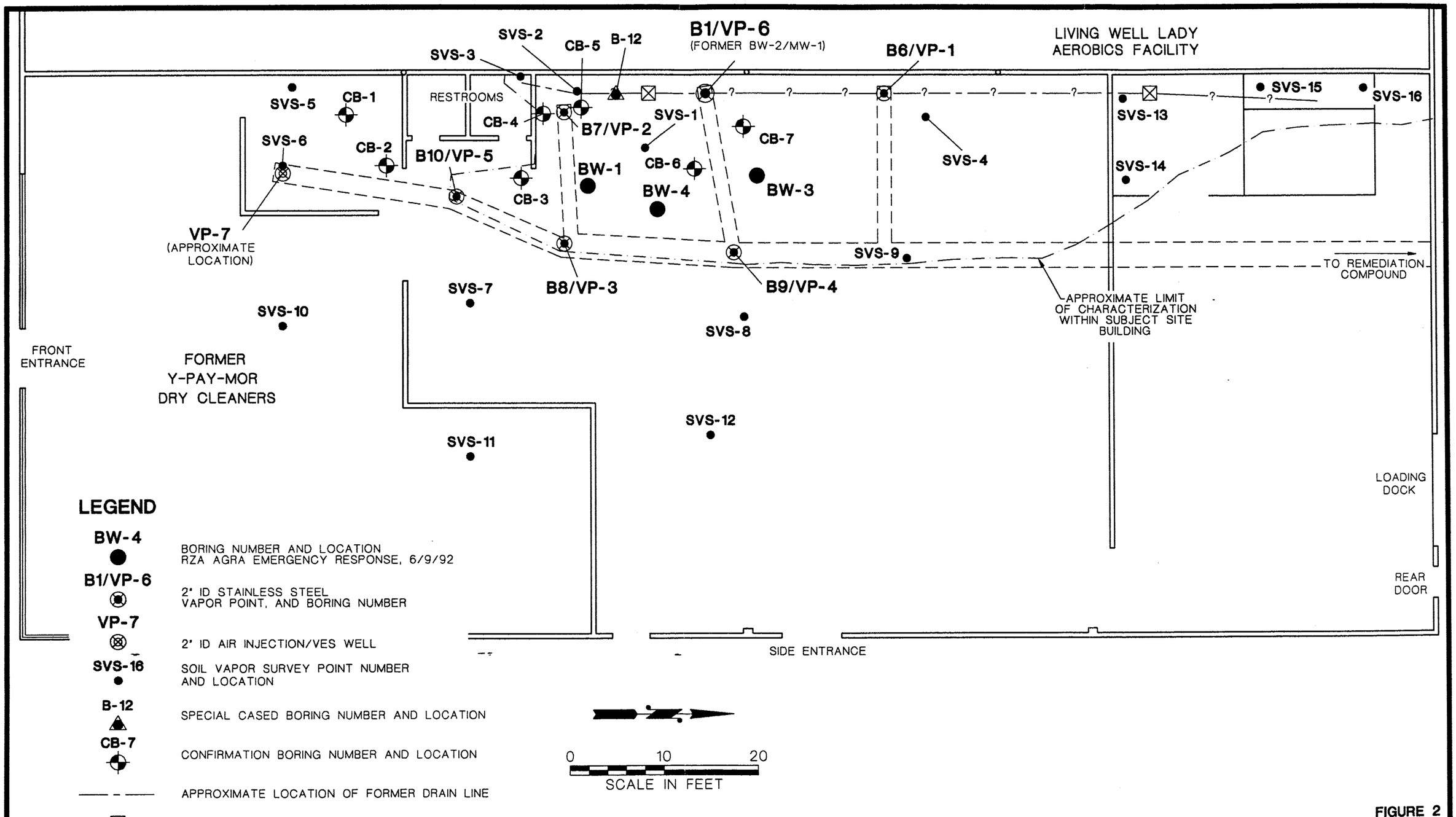

FIGURE 2

AGRA
Earth & Environmental
11335 N.E. 122nd Way, Suite 100
Kirkland, WA, U.S.A. 98034-6918

W.O.	11-07883-08
DESIGN	DAK
DRAWN	JMR
DATE	DEC 1994
SCALE	1"=10'

Y-PAY-MOR DRY CLEANERS
2210 SW 320TH STREET
FEDERAL WAY, WASHINGTON

SITE CHARACTERIZATION SUMMARY MAP

AGRA EARTH & ENVIRONMENTAL, INC. DRAWING NO. \11\07883-11\SOGA-SIT.DWG

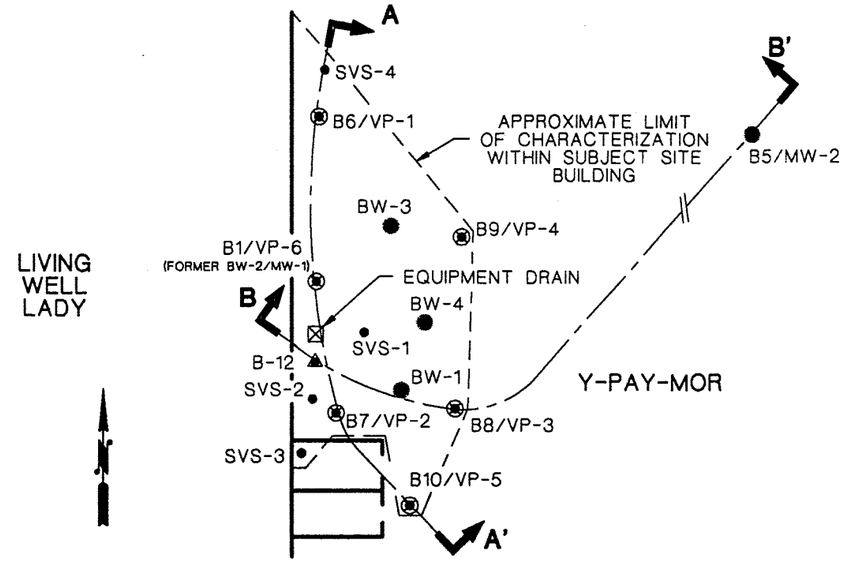

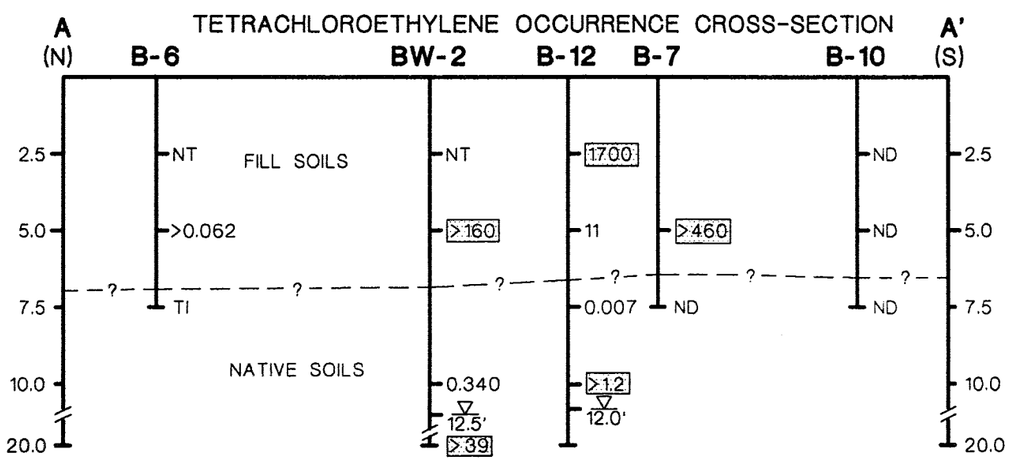

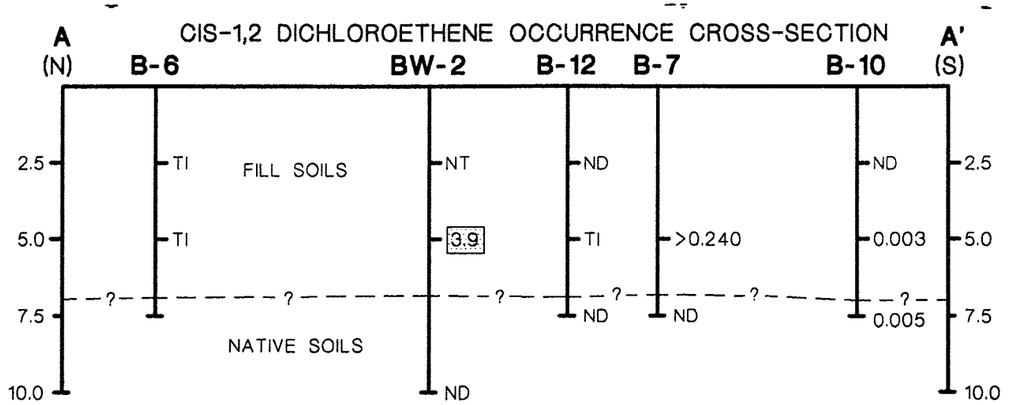

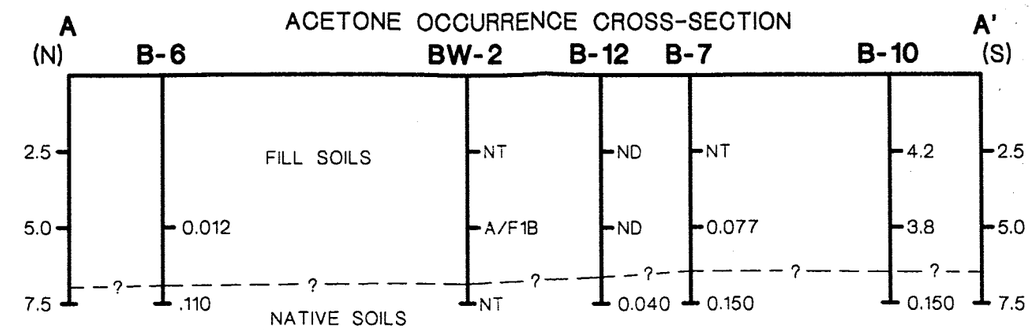

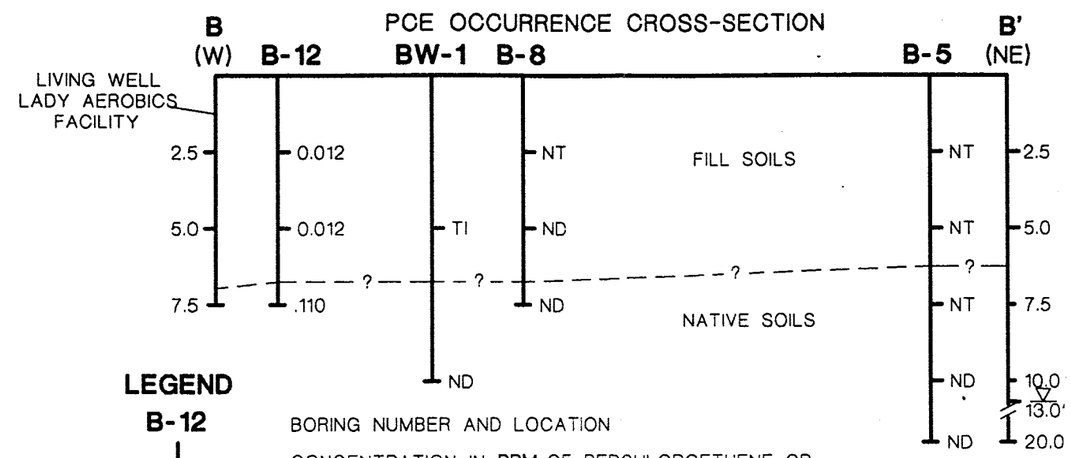

LEGEND

B-12	BORING NUMBER AND LOCATION
1700.0	CONCENTRATION IN **PPM** OF PERCHLOROETHENE OR CIS-DICHLOROETHENE REPORTED BY ANALYTICAL TESTING LAB
TI	COMPOUND IDENTIFIED IS ESTIMATED BELOW LABORATORY DETECTION LIMIT
>240.0	CONCENTRATIONS OF COMPOUNDS WHICH EXCEED CALIBRATED RANGE OF THE GC INSTRUMENT
160	SHADED VALUE DEMARKATES EXCEEDENCE OF MTCA METHOD A CLEANUP LEVEL
A/F1B	COMPOUND ANALYZED AND FOUND IN ASSOCIATED BLANK
NT	NOT SUBMITTED FOR ANALYTICAL TESTING
ND	NOT DETECTED AT LABORATORY DETECTION LIMIT
13.0'	DEPTH TO GROUNDWATER AT TIME OF DRILLING
- - - ? - - -	APPROXIMATE BOUNDARY DELINEATING FILL/NATIVE SOILS CONTACT
D D'	CROSS-SECTION DESIGNATION AND LOCATION

FIGURE 3

AGRA
Earth & Environmental
11335 N.E. 122nd Way, Suite 100
Kirkland, WA, U.S.A. 98034-6918

W.O.	11-07883-11
DESIGN	DAK
DRAWN	JMR
DATE	DEC 1994
SCALE	N.T.S.

Y-PAY-MOR DRY CLEANERS
2210 SW 320TH STREET
FEDERAL WAY, WASHINGTON

SOIL ANALYTICAL TEST RESULTS KEYED TO PROFILES

NOTE: FIGURE 4 CONTAINS SHEETS G-1, C-1, C-2 AND M-1 OUTLINING IN-SITU VAPOR EXTRACTION SYSTEM AS-BUILT DESIGN PLANS

FIGURE 4

AGRA
Earth & Environmental
11335 N.E. 122nd Way, Suite 100
Kirkland, WA, U.S.A. 98034-6918

W.O.	11-07883-11
DESIGN	DAK
DRAWN	JMR
DATE	DEC 1994
SCALE	N.T.S.

Y-PAY-MOR DRY CLEANERS
2210 SW 320TH STREET
FEDERAL WAY, WASHINGTON

SHEET G-1, C-1, C-2, AND M-1

Y-PAY-MOR DRY CLEANERS
2210 320TH STREET SOUTH
FEDERAL WAY, WASHINGTON

IN-SITU VAPOR EXTRACTION SYSTEM
AS-BUILT DESIGN PLANS

INDEX OF DRAWINGS

OWNER

NORTHWEST BUILDING CORPORATION
1300 NORTON BUILDING
801 SECOND AVENUE
SEATTLE, WASHINGTON 98104
ATTN: JOHN BICKLEY

ENVIRONMENTAL SUPERVISOR

RZA AGRA, INC. (CONSULTANT)
11335 N.E. 122ND WAY, SUITE 100
KIRKLAND, WASHINGTON 98034
(206) 820-4669
ATTN: DALE KRAMER

LOCATION MAP

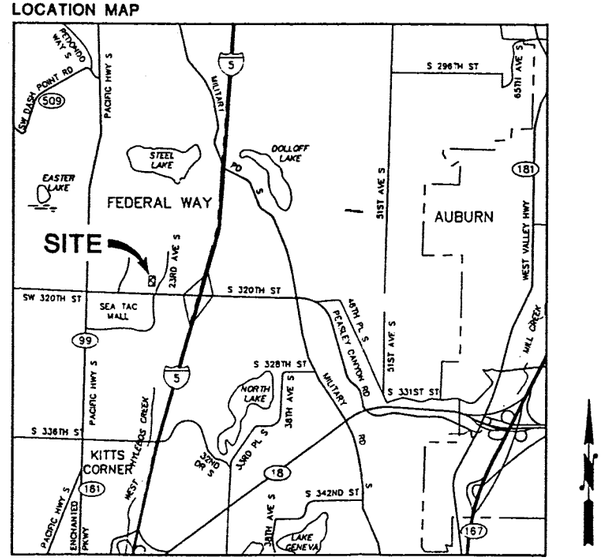

NO.	DESCRIPTION	INITIALS/DATE
3		
2		
1	ADDED SHT M1, TITLE	MJF/7-29-93

REVISIONS

Y-PAY-MOR DRY CLEANERS
2210 320TH STREET SOUTH
FEDERAL WAY, WASHINGTON

RZA AGRA, INC.
Engineering & Environmental Services
11335 N.E. 122nd Way, Suite 100
Kirkland, Washington 98034-5918
(206) 820-4669 FAX (206) 821-3914

SCALE	NONE	JOB NO.	11-07883-08
DESIGNED	CSS	DATE	4/6/93
DRAWN	MJF	DATE	4/6/93
CHECKED	--	SIGNED	
APPROVED	--	SIGNED	

LOCATION MAP AND INDEX OF DRAWINGS

SHEET G1

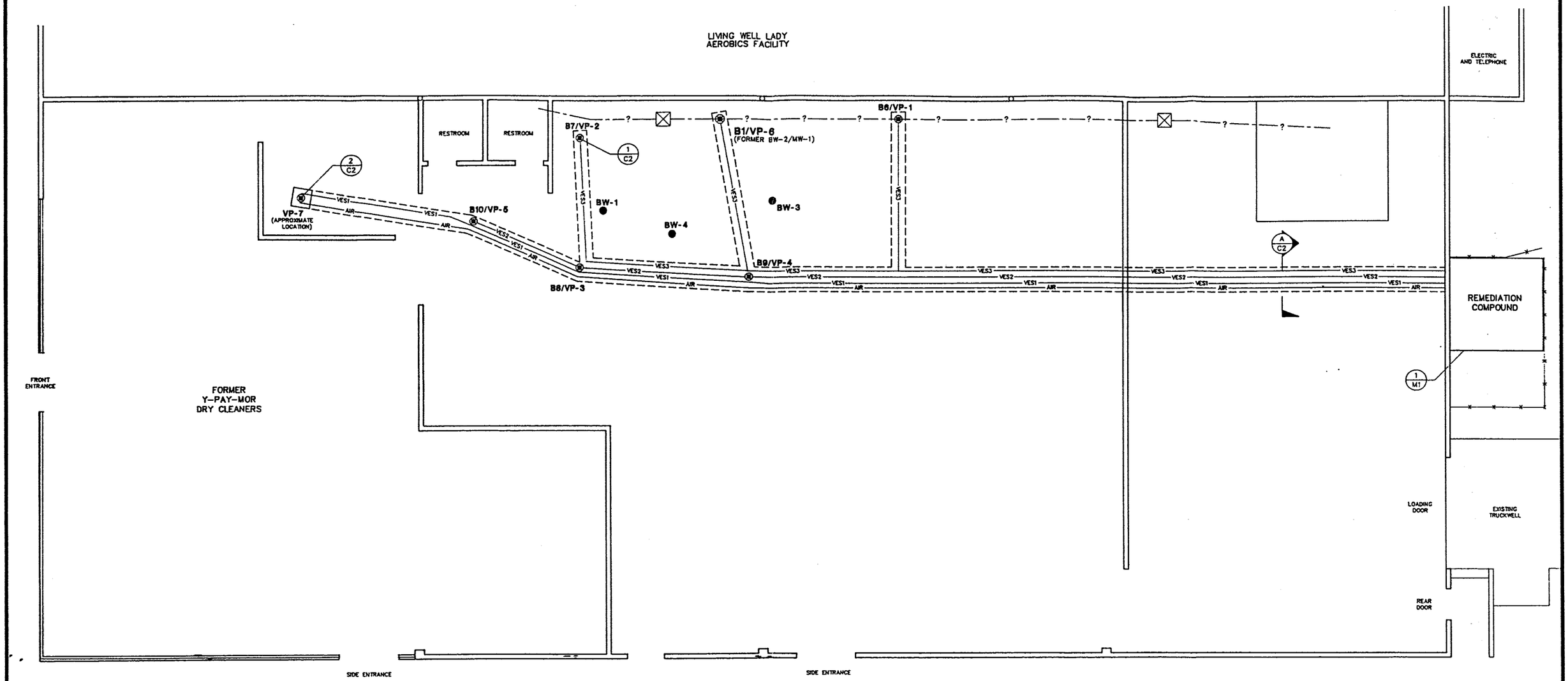

LEGEND

BW-4 ●	BORING NUMBER AND LOCATION RZA AGRA EMERGENCY RESPONSE, 6/9/92
B1/VP-6 ⊗	2" ID STAINLESS STEEL VAPOR POINT, AND BORING NUMBER
VP-7 ⊗	2" ID AIR INJECTION/VES WELL
— - —	APPROXIMATE LOCATION OF FORMER DRAIN LINE
⊠	EQUIPMENT DRAIN (FORMER)
[- - -]	LOCATION OF PROPOSED CONCRETE CUTTING
— VES —	VAPOR EXTRACTION HEADERS: 2" DIA. HDPE PIPE
— AIR —	AIR INJECTION HEADER: 2" DIA. HDPE PIPE

0 5 10
SCALE IN FEET

NO.	DESCRIPTION	INITIALS/DATE
3		
2		
1	VES WELL HEADERS	BDT 7/22/93

REVISIONS

Y-PAY-MOR DRY CLEANERS
2210 320TH STREET SOUTH
FEDERAL WAY, WASHINGTON

RZA AGRA, INC.
Engineering & Environmental Services
11335 N.E. 122nd Way, Suite 100
Kirkland, Washington 98034-6918
(206) 820-4669 FAX (206) 821-3914

SCALE	1"=5'	JOB NO.	11-07883-08
DESIGNED	CSS	DATE	4/5/93
DRAWN	MJF	DATE	4/5/93
CHECKED	--	SIGNED	
APPROVED	--	SIGNED	

SITE PLAN WITH SYSTEM LAYOUT

SHEET C1

DRAWING NO. 11-07883-08-C1.DWG

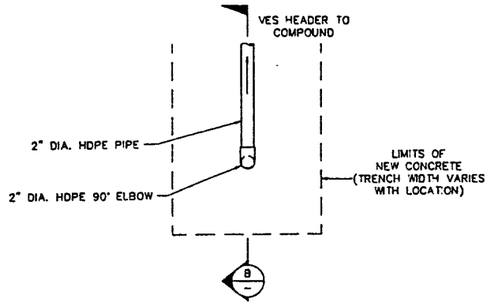

1 / C2 EXISTING 2" DIA. VAPOR POINT

NOT TO SCALE

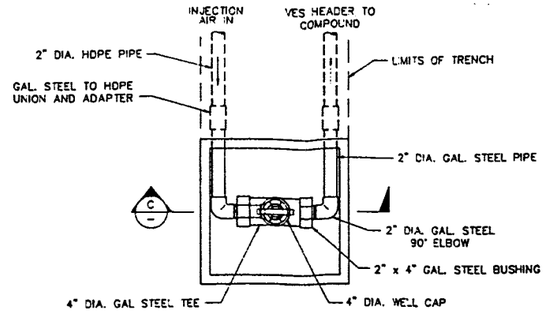

2 / C2 4" DIA. AIR INJECTION/VES WELL

NOT TO SCALE

EQUIPMENT SCHEDULE	
QTY.	VES WELLS AND PIPING
1	4" DIA. STAINLESS STEEL SLOTTED WELL CASING
1	4" DIA. STAINLESS STEEL END CAP
1	2" DIA. STAINLESS STEEL WELL CASING
1	2" DIA. STAINLESS STEEL END CAP
1	WELL PACKER
2	WELL CENTRALIZER
1	4" DIA. UNION COUPLER
1	4" DIA. HDPE TEE
2	4" x 2" HDPE BUSHINGS
550'	2" DIA. HDPE BLANK PIPE
7	2" DIA. UNION COUPLER
7	2" DIA. HDPE 90° ELBOW
4	2" DIA. HDPE TEE

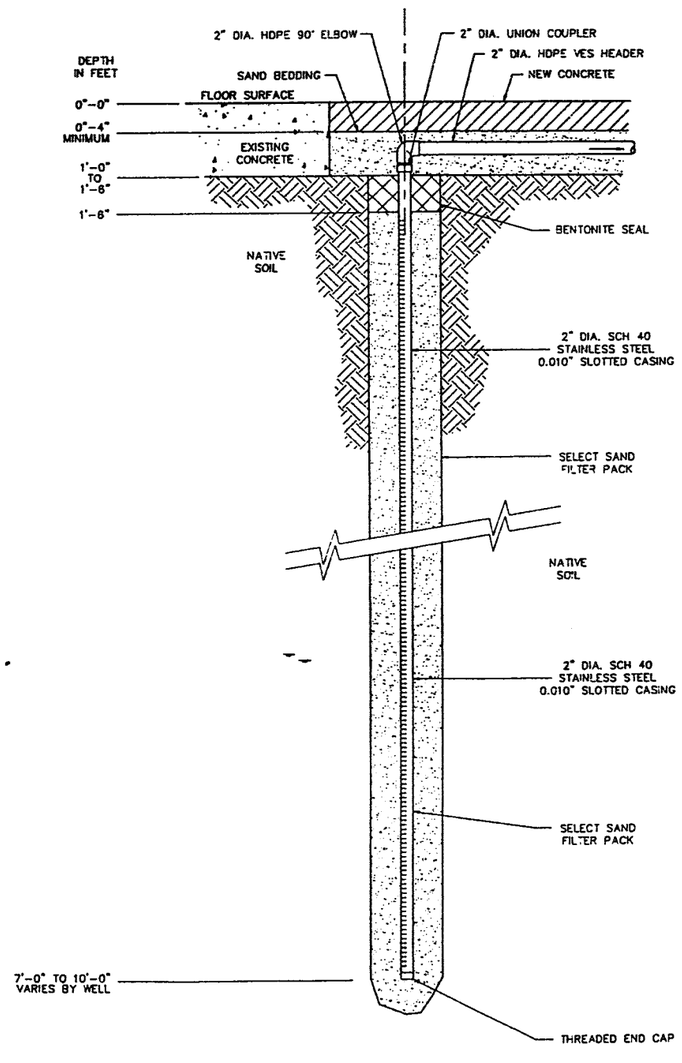

B / – EXISTING 2" DIA. VAPOR POINT SECTION

NOT TO SCALE

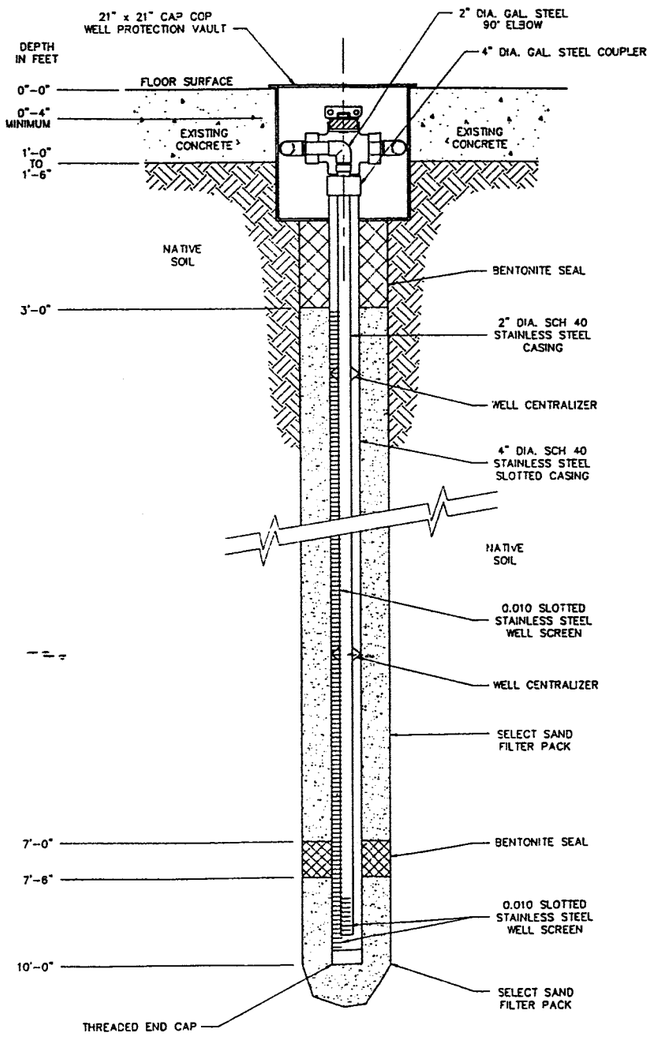

C / – 4" DIA. RECIRCULATING WELL SECTION

NOT TO SCALE

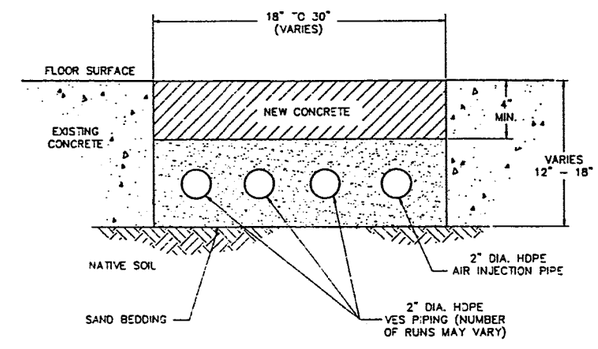

A / C2 TYPICAL TRENCH CROSS SECTION

NOT TO SCALE

NO.	DESCRIPTION	INITIALS/DATE
3		
2		
1	RECONFIGURED VP-7 WELLHEAD	BDT 7/23/93

REVISIONS

Y-PAY-MOR DRY CLEANERS
2210 320TH STREET SOUTH
FEDERAL WAY, WASHINGTON

RZA AGRA, INC.
Engineering & Environmental Services
11335 N.E. 122nd Way, Suite 100
Kirkland, Washington 98034-5918
(206) 820-4669 FAX (206) 821-3914

SCALE	--	JOB NO.	11-07883-08
DESIGNED	CSS	DATE	4/5/93
DRAWN	MJF	DATE	4/5/93
CHECKED	--	SIGNED	
APPROVED	--	SIGNED	

DETAILS AND SECTIONS

SHEET C2

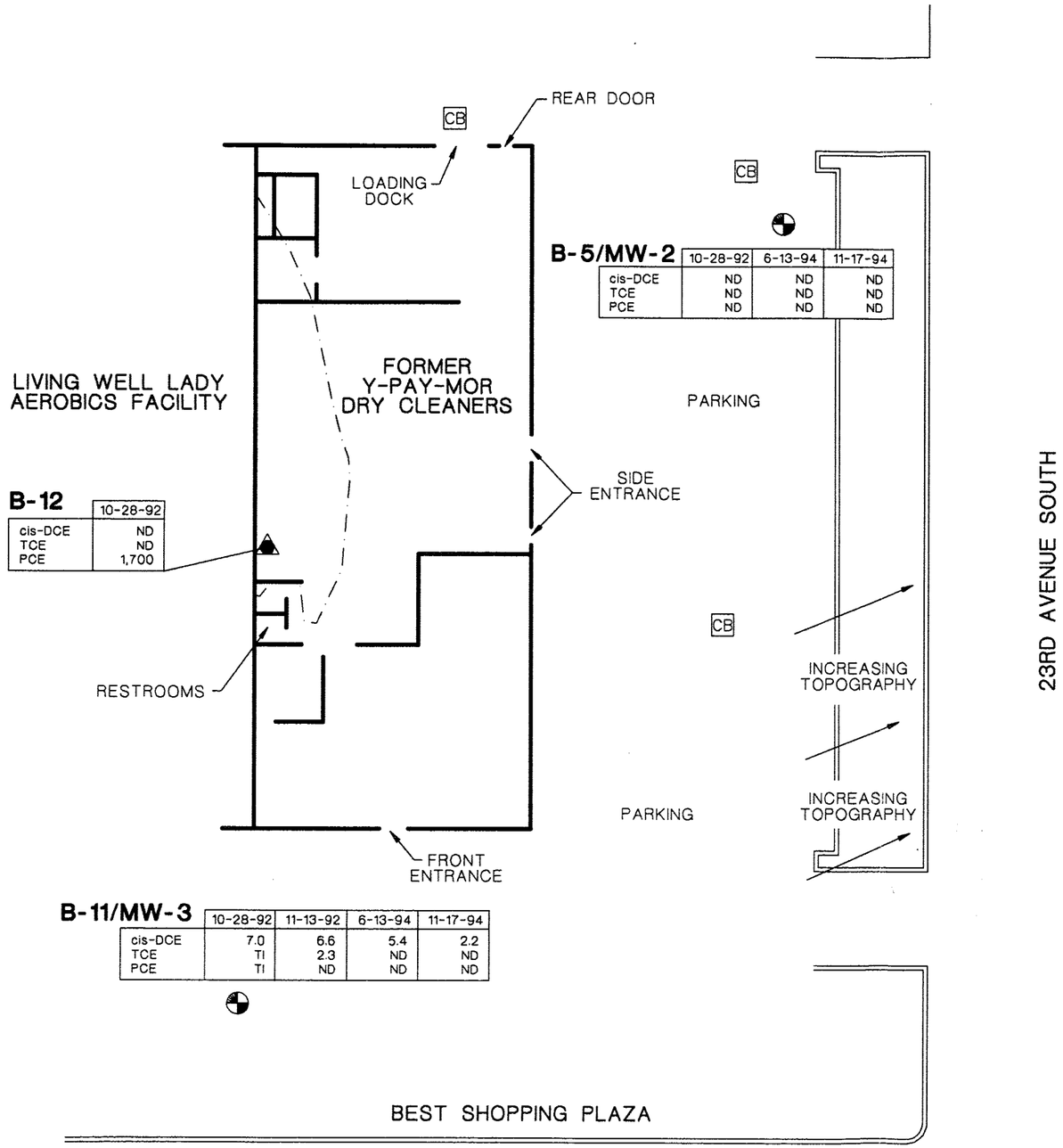

B-5/MW-2	10-28-92	6-13-94	11-17-94
cis-DCE	ND	ND	ND
TCE	ND	ND	ND
PCE	ND	ND	ND

B-12	10-28-92
cis-DCE	ND
TCE	ND
PCE	1,700

B-11/MW-3	10-28-92	11-13-92	6-13-94	11-17-94
cis-DCE	7.0	6.6	5.4	2.2
TCE	TI	2.3	ND	ND
PCE	TI	ND	ND	ND

LEGEND

B-11/MW-3 — 2" ID MONITORING WELL NUMBER AND LOCATION

B-12 — SPECIAL CASED BORING NUMBER AND LOCATION

CB — STORM DRAIN

— — — APPROXIMATE LIMIT OF CHARACTERIZATION WITHIN SUBJECT SITE BUILDING

GROUND WATER TEST RESULTS

CONCENTRATIONS IN PARTS PER BILLION (PPB)

ND — NOT DETECTED, BELOW METHOD DETECTION LIMIT
TI — COMPOUND IDENTIFIED, BELOW LABORATORY DETECTION LIMIT

cis-DCE — cis-1,2-DICHLOROETHENE
TCE — TRICHLOROETHENE
PCE — TETRACHLOROETHENE

	10-28-92
cis-DCE	ND
TCE	ND
PCE	ND

DATE COLLECTED

CONCENTRATIONS IN PPB

COMPOUNDS

0 30 60

SCALE IN FEET

FIGURE 6

AGRA
Earth & Environmental
11335 N.E. 122nd Way, Suite 100
Kirkland, WA, U.S.A. 98034-6918

W.O.	11-07883-08
DEISNG	DAK
DRAWN	JMR
DATE	DEC 1994
SCALE	1"=10'

Y-PAY-MOR DRY CLEANERS
2210 SW 320TH STREET
FEDERAL WAY, WASHINGTON

GROUNDWATER EXPLORATION MAP

AGRA EARTH & ENVIRONMENTAL, INC. DRAWING NO. \11\07883-11\SITE.DWG

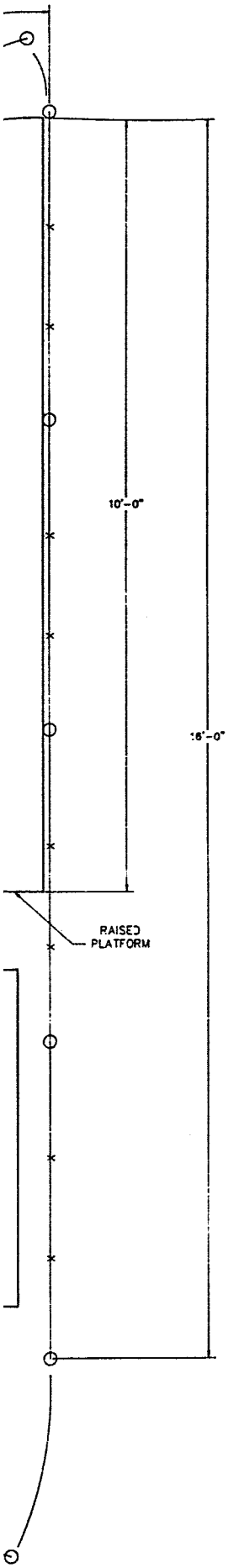

1/M1 **REMEDIATION COMPOUND LAYOUT**

SCALE: 1"=1'

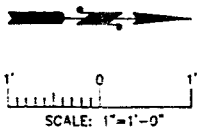

NO.	DESCRIPTION	INITIALS/DATE
3		
2		
1		

REVISIONS

Y-PAY-MOR DRY CLEANERS
2210 320TH STREET SOUTH
FEDERAL WAY, WASHINGTON

RZA AGRA, INC.
Engineering & Environmental Services
11335 N.E. 122nd Way, Suite 100
Kirkland, Washington 98034-6918
(206) 820-4669 FAX (206) 821-3914

SCALE	1"=1'	JOB NO.	11-07883-08
DESIGNED	CSS	DATE	4/5/93
DRAWN	MJF	DATE	4/5/93
CHECKED	--	SIGNED	
APPROVED	--	SIGNED	

COMPOUND LAYOUT SHEET M1

Figure 5: Graph of PCE Recovery Concentrations
Former Y-Pay-Mor Drycleaners
AGRA Earth & Environmental, Inc. Project No. 11-07883-10-11

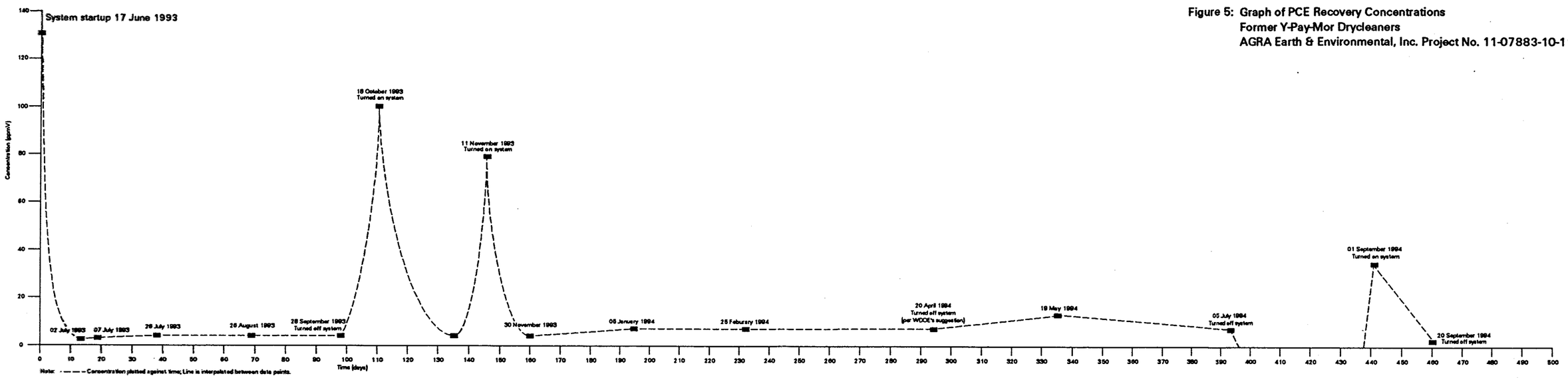

APPENDIX A
SUBSURFACE EXPLORATION BORING LOGS

PROJECT: *Y-PAY-MOR* W.O. *W-7883* BORING NO. *BW-1**

Elevation reference: Well completed:
Ground surface elevation: Casing elevation:

AS-BUILT DESIGN

DEPTH (feet)	SOIL DESCRIPTION	SAMPLE TYPE	SAMPLE NUMBER	BLOW COUNTS	OVM READING	GROUND WATER	TESTING
0							
5	*Medium, moist, dark gray SILT, some sand and gravel*		S-1	42	338		
10	*Very dense, wet to saturated, gray SAND, some silt, trace gravel*		S-2	76			8240
15	*Very dense, wet to saturated, gray SAND, some silt, trace gravel*		S-3	51			8240
20	*Very dense, saturated, gray SAND, some silt*		S-4	50/2"			8240
	Bottom of boring at 20 feet.						
25							
30							

LEGEND

2-inch O.D. split-spoon sample

Observed groundwater level ATD = at time of drilling

8240 EPA Method 8240 Analysis

** Note: Soil log classification based on correlations with nearby borings*

RZA AGRA, Inc.
Geotechnical & Environmental Group

11335 NE 122nd Way, Suite 100
Kirkland, Washington 98034-6918

Drilling started: *9 June 1992* Drilling completed: *10 June 1992* Logged by: *MLR*

PROJECT: *Y-PAY-MOR* W.O. *W-7883* WELL NO. *BW-2,MW-1**

Elevation reference: Well completed:
Ground surface elevation: Casing elevation:

AS-BUILT DESIGN

DEPTH (feet)	SOIL DESCRIPTION	SAMPLE TYPE	SAMPLE NUMBER	BLOW COUNTS	OVM READING	GROUND WATER	TESTING
0							
5	*Medium, damp to moist, dark gray SILT, some sand and gravel with abundant organic material and peat*		S-1	32	251		8240
10	*As above, small sample volume obtained*		S-2	53	750		8240
15	*Medium, wet to saturated, SAND with silt and gravel*		S-3	31	957		8240
20	*Medium, wet to saturated, SAND with silt and gravel*		S-4	38	1721		8240
	Bottom of boring at 20 feet.						
25							
30							

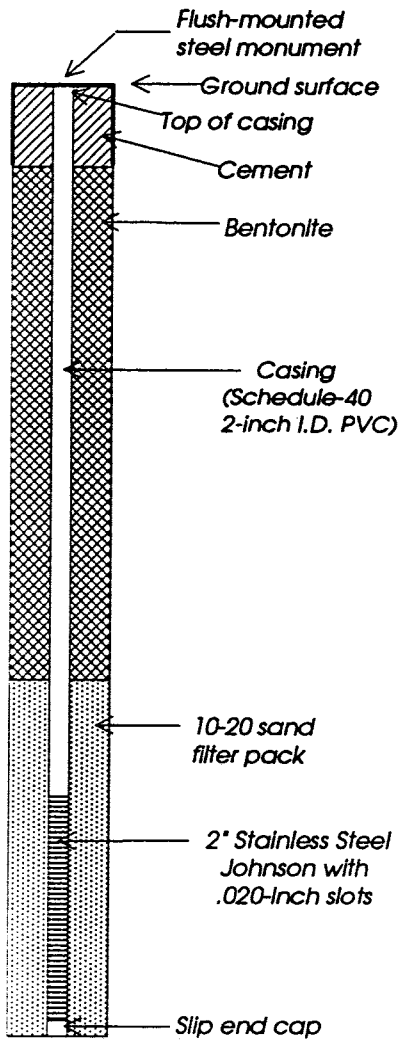

** Note: Monitoring well MW-1 was subsequently abandoned to 8 feet on 8-28-92, due to fact that well was separated at screen/pvc interface*

See log B1,VP-6 for construction details of vapor point which was installed in the former boring to 8 foot depth.

LEGEND

- 2-inch O.D. split-spoon sample
- Observed groundwater level ATD = at time of drilling
- 8240 EPA Method 8240 Analysis

** Note: Soil log classification based on correlations with nearby borings*

RZA AGRA, Inc.
Geotechnical & Environmental Group

11335 NE 122nd Way, Suite 100
Kirkland, Washington 98034-6918

Drilling started: *10 June 1992* Drilling completed: *10 June 1992* Logged by: *MLR*

PROJECT: *Y-PAY-MOR* W.O. *W-7883-4* VAPOR POINT *B-1,VP-6*

Elevation reference:	Well completed:	VAPOR POINT AS-BUILT DESIGN	Page 1 of 1
Ground surface elevation:	Casing elevation:		

DEPTH (feet)	SOIL DESCRIPTION	SAMPLE TYPE	SAMPLE NUMBER	BLOW COUNTS	M-TIP HNU	GROUND WATER	TESTING
0	*See BW-2,MW-1 for soil description*						
5							
10	*Bottom of boring at 8.0 feet.*						
15							
20							
25							
30							

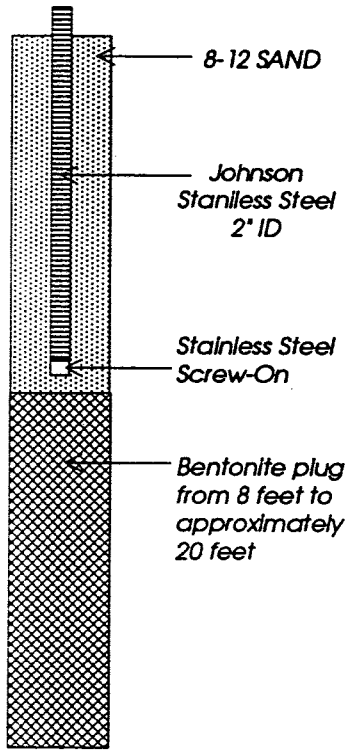

Note: Formerly BW-2,MW-1

LEGEND

RZA AGRA, Inc.
Geotechnical & Environmental Group

11335 NE 122nd Way, Suite 100
Kirkland, Washington 98034-6918

Drilling started: *28 August 1992* Drilling completed: *28 August 1992* Logged by: *DAK*

PROJECT: *Y-PAY-MOR* W.O. *W-7883* BORING NO. *BW-3**

Elevation reference: Well completed:
Ground surface elevation: Casing elevation:

AS-BUILT DESIGN

DEPTH (feet)	SOIL DESCRIPTION	SAMPLE TYPE	SAMPLE NUMBER	BLOW COUNTS	OVM READING	GROUND WATER	TESTING
0							
5	*Very dense, moist, gray SILT, some organic material*		S-1	73			8240
10	*Very dense, moist, gray SILT, with clay*		S-2	98			8240
15	*Very dense, wet to saturated, gray SILT, some sand and gravel*		S-3				8240
	Bottom of boring at 15 feet.						
20							
25							
30							

LEGEND

2-inch O.D. split-spoon sample

Observed groundwater level ATD = at time of drilling

8240 EPA Method 8240 Analysis

** Note: Soil log classification based on correlations with nearby borings*

RZA AGRA, Inc.
Geotechnical & Environmental Group

11335 NE 122nd Way, Suite 100
Kirkland, Washington 98034-6918

Drilling started: *10 June 1992* Drilling completed: *10 June 1992* Logged by: *MLR*

PROJECT: *Y-PAY-MOR* W.O. *W-7883* BORING NO. *BW-4* *

Elevation reference:	Well completed:	AS-BUILT DESIGN	Page 1 of 1
Ground surface elevation:	Casing elevation:		

DEPTH (feet)	SOIL DESCRIPTION	SAMPLE TYPE	SAMPLE NUMBER	BLOW COUNTS	OVM READING	GROUND WATER	TESTING
0							
5	*Medium dense, moist, dark gray SILT, some sand with organics*		S-1	47			8240
10	*Medium dense, moist, dark gray SILT*		S-2	30			8240
15	*Very dense, saturated, dark gray SILT*		S-3	56			8240
	Bottom of boring at 15 feet.						
20							
25							
30							

LEGEND

- 2-inch O.D. split-spoon sample
- Observed groundwater level ATD = at time of drilling
- 8240 EPA Method 8240 Analysis

** Note: Soil log classification based on correlations with nearby borings*

RZA AGRA, Inc.
Geotechnical & Environmental Group

11335 NE 122nd Way, Suite 100
Kirkland, Washington 98034-6918

Drilling started: *10 June 1992* Drilling completed: *10 June 1992* Logged by: *MLR*

PROJECT: *Y-PAY-MOR* W.O. *W-7883-4* WELL NO. *B-5,MW-2*

Elevation reference: Well completed:
Ground surface elevation: Casing elevation:

DEPTH (feet)	SOIL DESCRIPTION	SAMPLE TYPE	SAMPLE NUMBER	BLOW COUNTS	M-TIP HNU	GROUND WATER	TESTING
0							
	Medium, wet, dark gray SILT, some SAND and gravel.		S-1	29	0,2.5		
5	*Medium, damp to moist, dark gray SILT, some sand and gravel.*		S-2	28	0,2.2		
	Medium, damp, dark gray SILT, some sand and gravel		S-3	24	0,1.8		
10	*Loose, wet to saturated, coarse SAND, some silt, trace gravel.*		S-4	7	0,3.3		8240
	Dense, damp, gray SILT, some sand and gravel.		S-5	42	0,2.3	ATD	
15	*Stiff, wet to saturated, gray SILT, some sand and gravel.*		S-6	31	0,2.2		
	Stiff, wet to saturated, brown SILT, some sand.		S-7	15	0,2.2		
20	*Dense, saturated, gray SAND, some gravel.*		S-8	38	0,2.2		8240
	Bottom of boring at 20 feet.						
25							
30							

AS-BUILT DESIGN

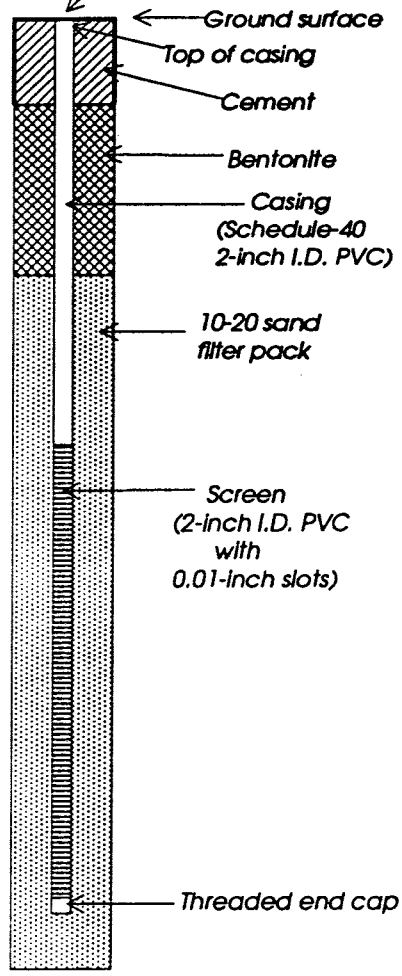

LEGEND

2-inch O.D. split-spoon sample

ATD — Observed groundwater level ATD = at time of drilling

8240 — EPA Method 8240 Analysis

RZA AGRA, Inc.
Geotechnical & Environmental Group

11335 NE 122nd Way, Suite 100
Kirkland, Washington 98034-6918

Drilling started: *25 August 1992* Drilling completed: *25 August 1992* Logged by: *DAK*

PROJECT: *Y-PAY-MOR* W.O. *W-7883-4* VAPOR POINT *B-6,VP-1*

Elevation reference: Well completed:
Ground surface elevation: Casing elevation:

VAPOR POINT AS-BUILT DESIGN

DEPTH (feet)	SOIL DESCRIPTION	SAMPLE TYPE	SAMPLE NUMBER	BLOW COUNTS	M-TIP HNU	GROUND WATER	TESTING
0							
	Medium dense, brown SILT with gravel.	X	S-1	27			
5	*Medium dense, moist, gray SAND, some silt and gravel, peat, wood material 3" thick*		S-2	22	3.6,5.2		8240
	Medium dense, wet to saturated, brown SILT with sand, trace gravel		S-3	30	0.0,1.8		8240
10	*Bottom of boring at 7.5 feet.*						
15							
20							
25							
30							

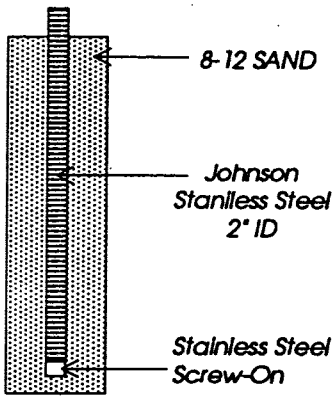

LEGEND

2-inch O.D. split-spoon sample

Sample not recovered

8240 EPA Method 8240 Analysis

RZA AGRA, Inc.
Geotechnical & Environmental Group

11335 NE 122nd Way, Suite 100
Kirkland, Washington 98034-6918

Drilling started: *26 August 1992* Drilling completed: *26 August 1992* Logged by: *DAK*

PROJECT: *Y-PAY-MOR* W.O. *W-7883-4* VAPOR POINT *B-7,VP-2*

Elevation reference: Well completed:
Ground surface elevation: Casing elevation:

VAPOR POINT AS-BUILT DESIGN

DEPTH (feet)	SOIL DESCRIPTION	SAMPLE TYPE	SAMPLE NUMBER	BLOW COUNTS	M-TIP HNU	GROUND WATER	TESTING
0							
	Very dense, moist, gray GRAVEL with sand and silt.		S-1	73	79.0,24.0		
5	*Very dense, moist, gray, SILT, with sand and trace of gravel.*		S-2	50	38.0,8.0		8240
	Very dense, dry, gray, SILT, with sand and gravel.		S-3	50	25,3.7		8240
10	*Bottom of boring at 7.5 feet.*						
15							
20							
25							
30							

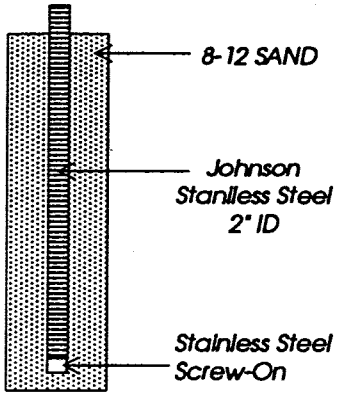

LEGEND

2-inch O.D. split-spoon sample

X Sample not recovered

8240 EPA Method 8240 Analysis

RZA AGRA, Inc.
Geotechnical & Environmental Group

11335 NE 122nd Way, Suite 100
Kirkland, Washington 98034-6918

Drilling started: *26 August 1992* Drilling completed: *26 August 1992* Logged by: *DAK*

PROJECT: *Y-PAY-MOR* W.O. *W-7883-4* VAPOR POINT *B-8,VP-3*

Elevation reference:	Well completed:	VAPOR POINT AS-BUILT DESIGN	Page 1 of 1
Ground surface elevation:	Casing elevation:		

DEPTH (feet)	SOIL DESCRIPTION	SAMPLE TYPE	SAMPLE NUMBER	BLOW COUNTS	M-TIP HNU	GROUND WATER	TESTING
0							
	Very dense, moist to wet, gray SAND some silt and gravel		S-1	58	22,4.1		
5	*Dense, dry, dark gray to black SAND some silt and gravel. Peat and woody fragments abundant*		S-2	31	16.7,4.1		8240
	Stiff, damp, gray, silt.		S-3	47	0,2.1		8240
10	*Bottom of boring at 7.5 feet.*						
15							
20							
25							
30							

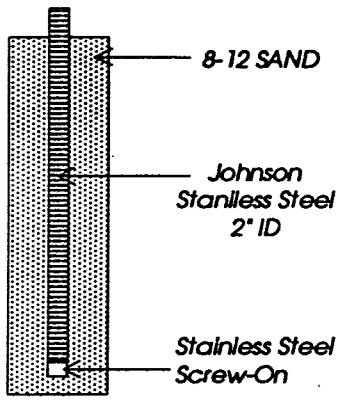

LEGEND

2-inch O.D. split-spoon sample

X Sample not recovered

8240 EPA Method 8240 Analysis

RZA AGRA, Inc.
Geotechnical & Environmental Group

11335 NE 122nd Way, Suite 100
Kirkland, Washington 98034-6918

Drilling started: *27 August 1992* Drilling completed: *27 August 1992* Logged by: *DAK*

PROJECT: *Y-PAY-MOR* W.O. *W-7883-4* VAPOR POINT *B-9,VP-4*

Elevation reference: Well completed:
Ground surface elevation: Casing elevation:

VAPOR POINT AS-BUILT DESIGN

DEPTH (feet)	SOIL DESCRIPTION	SAMPLE TYPE	SAMPLE NUMBER	BLOW COUNTS	M-TIP HNU	GROUND WATER	TESTING
0							
	Dense, damp, bark gray SAND some silt and gravel.		S-1	45	11.0.3.0		
5	*Loose to medium, damp, bark gray SAND, some gravel, abundant wood material.*		S-2	14	4.0.2.4		8240
	Medium, damp, gray SAND, some silt and gravel.		S-3	27	6.8.2.4		8240
10	*Bottom of boring at 8 feet.*						
15							
20							
25							
30							

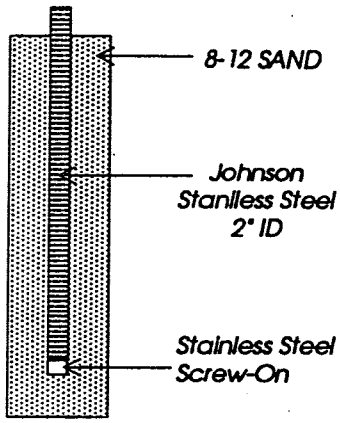

LEGEND

2-inch O.D. split-spoon sample

Sample not recovered

8240 EPA Method 8240 Analysis

RZA AGRA, Inc.
Geotechnical & Environmental Group

11335 NE 122nd Way, Suite 100
Kirkland, Washington 98034-6918

Drilling started: *27 August 1992* Drilling completed: *27 August 1992* Logged by: *DAK*

PROJECT: *Y-PAY-MOR* W.O. *W-7883-4* VAPOR POINT *B-10,VP-5*

Elevation reference: Well completed:
Ground surface elevation: Casing elevation:

VAPOR POINT AS-BUILT DESIGN

DEPTH (feet)	SOIL DESCRIPTION	SAMPLE TYPE	SAMPLE NUMBER	BLOW COUNTS	M-TIP HNU	GROUND WATER	TESTING
0							
	Very dense, moist, gray GRAVEL some silt and sand.		S-1	72	240.131		
5	*Very dense, moist, gray GRAVEL some silt and sand.*		S-2	51	425.130		8240
	Very dense, moist, gray SILT some silt and gravel.		S-3	50	68.22		8240
10	*Bottom of boring at 7.5 feet.*						
15							
20							
25							
30							

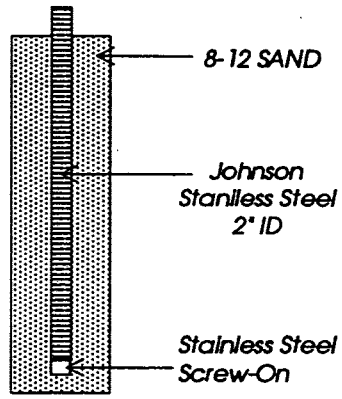

LEGEND

2-inch O.D. split-spoon sample

8240 EPA Method 8240 Analysis

Sample not recovered

RZA AGRA, Inc.
Geotechnical & Environmental Group

11335 NE 122nd Way, Suite 100
Kirkland, Washington 98034-6918

Drilling started: *28 August 1992* Drilling completed: *28 August 1992* Logged by: *DAK*

PROJECT: *Y-PAY-MOR* W.O. *W-7883-6* WELL NO. *B-11,MW-3*

Elevation reference: **Well completed:**
Ground surface elevation: **Casing elevation:**

AS-BUILT DESIGN

DEPTH (feet)	SOIL DESCRIPTION	SAMPLE TYPE	SAMPLE NUMBER	BLOW COUNTS	HNU	GROUND WATER	TESTING
0							
	Medium, wet, gray SAND, some silt and gravel (Fill)		S-1	14	2.8		
5	*Loose, wet, gray, SAND, with gravel and silt (Fill)*		S-2	4	3.0		
	Very dense, wet then dry, gray-black SAND, Abundant organic matter (Weathered Till)		S-3	51	3.9		8240
10	*Stiff, wet, gray, SILT, some gravel (Weathered Till)*		S-4	12	4.0		
	Meldum, saturated, gray-brown SAND, some gravel		S-5	23	4.2	ATD	8240
15	*Medium, saturated, gray-brown SAND with gravel*		S-6	30	4.2		8240
	Bottom of boring at 15 feet.						
20							
25							
30							

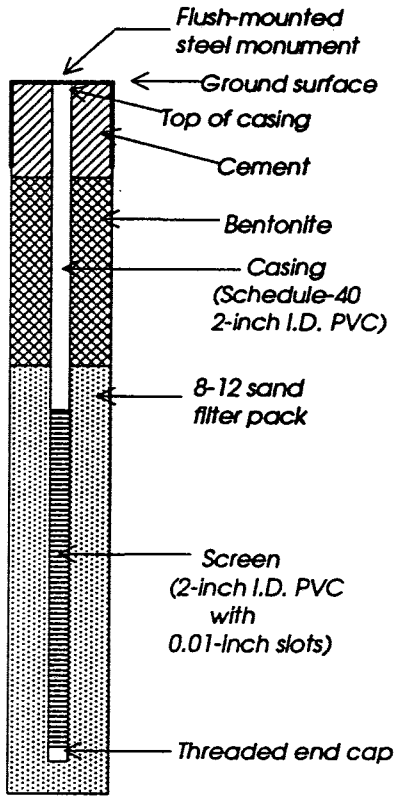

LEGEND

2-inch O.D. split-spoon sample

ATD — Observed groundwater level ATD = at time of drilling

8240 — EPA Method 8240 Analysis

RZA AGRA, Inc.
Geotechnical & Environmental Group

11335 NE 122nd Way, Suite 100
Kirkland, Washington 98034-6918

Drilling started: *27 October 1992* Drilling completed: *27 October 1992* Logged by: *DAK*

PROJECT: *Y-PAY-MOR* W.O. *W-7883-6* BORING *B-12*

Elevation reference: Well completed:
Ground surface elevation: Casing elevation:

AS-BUILT DESIGN SURFACE CASED BORING

DEPTH (feet)	SOIL DESCRIPTION	SAMPLE TYPE	SAMPLE NUMBER	BLOW COUNTS	HNU	GROUND WATER	TESTING
0	*Moist, gray, brown SAND with silt*		S-1	N/A	450.0		8240
5	*Very dense, moist, gray SAND, with silt, some organic matter*		S-2	52	250.0		8240
	Hard, moist to wet, gray SILT, some gravel		S-3	66	4.0		8240
10	*As above*		*S-3b	50	4.0		8240
	Hard, saturated, orange-brown SILT with sand and gravel		S-4	50	4.1	ATD	8240
15			S-5	65	2.3		
	Bottom of boring at 16.5 feet.						
20							
25							
30							

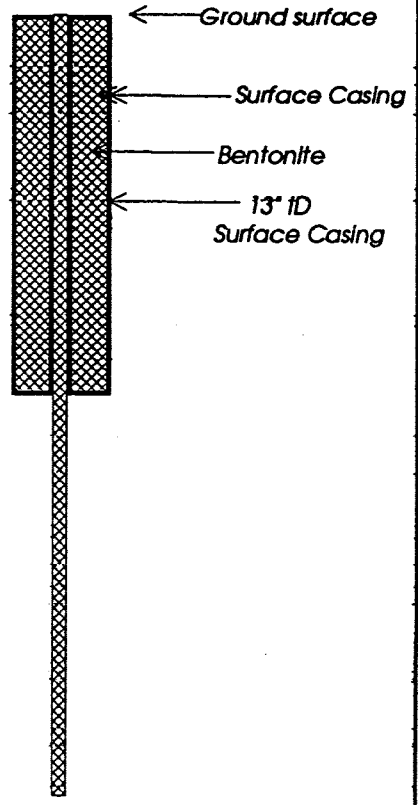

Note: Boring B-12 was advanced to 16.5 feet through a 13:(ID) surface casing which was advanced to approximately 6.5 feet

Boring B-12 was abandoned from 0 feet to 16.5' with bentonite slurry.

LEGEND

- 2-inch O.D. split-spoon sample
- Grab sample
- * Reported as 'S-36' by Analytical Testing Lab
- ATD — Observed groundwater level, ATD = at time of drilling
- 8240 — EPA Method 8240 Analysis

RZA AGRA, Inc.
Geotechnical & Environmental Group

11335 NE 122nd Way, Suite 100
Kirkland, Washington 98034-6918

Drilling started: *27 October 1992* Drilling completed: *28 October 1992* Logged by: *DAK*

PROJECT: *Y-Pay-More Dry Cleaners* W.O. *11-07883-11* CONFIRMATION BORING NO. *B-1*

DEPTH (feet)	SOIL DESCRIPTION Approximate ground surface elevation: *Unknown*	SAMPLE TYPE	SAMPLE NUMBER	OVM READING	STANDARD PENETRATION RESISTANCE (Blows per foot)	TESTING
0	*6" Concrete*					
	Dense, moist, brown, gravelly SAND (Fill)					
5						
	Dense, moist, gray brown, silty SAND		S-1	0.0		8010
	Boring terminated at approximately 8 feet				*Boring abandoned with bentonite chip and concrete plug.*	
10						
15						
20						
25						
30						

Scale: 0, 10, 20, 30, 40, 50

MOISTURE CONTENT: Plastic limit — Natural — Liquid limit

LEGEND

2-inch OD split-spoon sample

8010 Analytical testing

AGRA Earth & Environmental
11335 NE 122nd Way, Suite 100
Kirkland, Washington 98034-6918

Drilling started: *16 November 1994* Drilling completed: *16 November 1994* Logged by: *ELS*

CONFIRMATION

PROJECT: *Y-Pay-More Dry Cleaners* W.O. *11-07883-11* BORING NO. *B-2*

DEPTH (feet)	SOIL DESCRIPTION Approximate ground surface elevation: *Unknown*	SAMPLE TYPE	SAMPLE NUMBER	OVM READING	STANDARD PENETRATION RESISTANCE ▲ Blows per foot 0 10 20 30 40 50	Page 1 of 1 TESTING
0	*8" Concrete*					
	Dense, moist, brown, gravelly SAND (Fill)					
5	*Medium dense, moist, brown, silty SAND*	I	S-1	0.0	▲	8010
	Boring terminated at approximately 6.5 feet				*Boring abandoned with bentonite chip and concrete plug.*	
10						
15						
20						
25						
30						

0 10 20 30 40 50

MOISTURE CONTENT

Plastic limit — Natural — Liquid limit

LEGEND

I 2-inch OD split-spoon sample

8010 Analytical testing

AGRA
Earth & Environmental
11335 NE 122nd Way, Suite 100
Kirkland, Washington 98034-6918

Drilling started: *16 November 1994* Drilling completed: *16 November 1994* Logged by: *ELS*

CONFIRMATION

PROJECT: *Y-Pay-More Dry Cleaners* W.O. *11-07883-11* BORING NO. *B-3*

DEPTH (feet)	SOIL DESCRIPTION Approximate ground surface elevation: *Unknown*	SAMPLE TYPE	SAMPLE NUMBER	OVM READING	STANDARD PENETRATION RESISTANCE (Blows per foot)	TESTING
0	*6" Concrete*					
	Dense, moist, brown, gravelly SAND (Fill)					
5	*Very dense, moist, brown, silty SAND*		S-1	0.0	Blowcount Overstated 50/6"	8010
	Boring terminated at approximately 6.5 feet				*Boring abandoned with bentonite chip and concrete plug.*	
10						
15						
20						
25						
30						

MOISTURE CONTENT: Plastic limit — Natural — Liquid limit

LEGEND

2-inch OD split-spoon sample

8010 Analytical testing

AGRA Earth & Environmental
11335 NE 122nd Way, Suite 100
Kirkland, Washington 98034-6918

Drilling started: *16 November 1994* Drilling completed: *16 November 1994* Logged by: *ELS*

CONFIRMATION

PROJECT: *Y-Pay-More Dry Cleaners* W.O. *11-07883-11* BORING NO. *B-4*

DEPTH (feet)	SOIL DESCRIPTION Approximate ground surface elevation: *Unknown*	SAMPLE TYPE	SAMPLE NUMBER	OVM READING	STANDARD PENETRATION RESISTANCE (Blows per foot)	TESTING
0	*10" Concrete*					
	Dense, moist, brown, gravelly SAND (Fill)					
5	*Dense, moist, brown, silty SAND with some organics*		S-1	1100		8010
	Boring terminated at approximately 6.5 feet				*Boring abandoned with bentonite chip and concrete plug.*	
10						
15						
20						
25						
30						

0 10 20 30 40 50

MOISTURE CONTENT

Plastic limit — Natural — Liquid limit

LEGEND

2-inch OD split-spoon sample

8010 Analytical testing

AGRA Earth & Environmental
11335 NE 122nd Way, Suite 100
Kirkland, Washington 98034-6918

Drilling started: *16 November 1994* Drilling completed: *16 November 1994* Logged by: *ELS*

PROJECT: *Y-Pay-More Dry Cleaners* W.O. *11-07883-11*

CONFIRMATION BORING NO. *B-5*

DEPTH (feet)	SOIL DESCRIPTION Approximate ground surface elevation: *Unknown*	SAMPLE TYPE	SAMPLE NUMBER	OVM READING	STANDARD PENETRATION RESISTANCE (Blows per foot)	TESTING
0	*6" Concrete*					
	Dense, moist, brown, gravelly SAND (Fill)					
5						
	Dense, moist, gray brown, silty SAND with organics	I	S-1	0.0	▲	8010
	Boring terminated at approximately 8 feet				*Boring abandoned with bentonite chip and concrete plug.*	
10						
15						
20						
25						
30						

Blows per foot: 0 10 20 30 40 50

MOISTURE CONTENT: 0 10 20 30 40 50

Plastic limit — Natural — Liquid limit

LEGEND

I 2-inch OD split-spoon sample

8010 Analytical testing

AGRA Earth & Environmental
11335 NE 122nd Way, Suite 100
Kirkland, Washington 98034-6918

Drilling started: *16 November 1994* Drilling completed: *16 November 1994* Logged by: *ELS*

PROJECT: *Y-Pay-More Dry Cleaners* W.O. *11-07883-11* CONFIRMATION BORING NO. *B-6*

DEPTH (feet)	SOIL DESCRIPTION Approximate ground surface elevation: *Unknown*	SAMPLE TYPE	SAMPLE NUMBER	OVM READING	STANDARD PENETRATION RESISTANCE (Blows per foot)	TESTING
0	*4" Concrete*					
	Dense, moist, brown, gravelly SAND (Fill)					
5	*Dense, moist, brown, silty SAND with some organics*		S-1	0.0		8010
	Boring terminated at approximately 6.5 feet				*Boring abandoned with bentonite chip and concrete plug.*	
10						
15						
20						
25						
30						

0 10 20 30 40 50

MOISTURE CONTENT

Plastic limit — Natural — Liquid limit

LEGEND

2-inch OD split-spoon sample

8010 Analytical testing

AGRA Earth & Environmental
11335 NE 122nd Way, Suite 100
Kirkland, Washington 98034-6918

Drilling started: *16 November 1994* Drilling completed: *16 November 1994* Logged by: *ELS*

PROJECT: *Y-Pay-More Dry Cleaners* W.O. *11-07883-11* CONFIRMATION BORING NO. *B-7*

DEPTH (feet)	SOIL DESCRIPTION Approximate ground surface elevation: *Unknown*	SAMPLE TYPE	SAMPLE NUMBER	OVM READING	STANDARD PENETRATION RESISTANCE (Blows per foot)	TESTING
0	*7" Concrete*					
	Dense, moist, brown, gravelly SAND (Fill)					
5	*Dense, moist, brown, silty SAND with some orgaincs*		S-1	0.0	▲	8010
	Boring terminated at approximately 6.5 feet				*Boring abandoned with bentonite chip and concrete plug.*	
10						
15						
20						
25						
30						

0 10 20 30 40 50

MOISTURE CONTENT

Plastic limit — Natural — Liquid limit

LEGEND

2-inch OD split-spoon sample

8010 Analytical testing

AGRA Earth & Environmental
11335 NE 122nd Way, Suite 100
Kirkland, Washington 98034-6918

Drilling started: *16 November 1994* Drilling completed: *16 November 1994* Logged by: *ELS*

Appendix B

APPENDIX B

SOIL ANALYTICAL TEST CERTIFICATES

SOIL VAPOR ANALYTICAL TEST CERTIFICATES

1A
VOLATILE ORGANICS ANALYSIS DATA SHEET

EPA SAMPLE NO.

BW-1-2

Lab Name: PNELI Contract: Y-PAY-MOR

Lab Code: PNELI Case No.: 4121 SAS No.: SDG No.: BW-1-1

Matrix: (soil/water) SOIL Lab Sample ID: 4121-02

Sample wt/vol: 15.0 (g/mL) G Lab File ID: B8241

Level: (low/med) LOW Date Received: 06/11/92

% Moisture: not dec. 11 Date Analyzed: 06/15/92

Column: (pack/cap) CAP Dilution Factor: 1.0

CAS NO.	COMPOUND	CONCENTRATION UNITS: (ug/L or ug/Kg) UG/KG	Q
74-87-3	Chloromethane	11	U
74-83-9	Bromomethane	11	U
75-01-4	Vinyl Chloride	11	U
75-00-3	Chloroethane	11	U
75-09-2	Methylene Chloride	4	J
67-64-1	Acetone	15	
75-15-0	Carbon Disulfide	6	U
75-35-4	1,1-Dichloroethene	6	U
75-34-3	1,1-Dichloroethane	6	U
156-60-5	trans-1,2-Dichloroethene	6	U
156-59-2	cis-1,2-Dichloroethene	2	J
67-66-3	Chloroform	6	U
107-06-2	1,2-Dichloroethane	6	U
78-93-3	2-Butanone	11	U
71-55-6	1,1,1-Trichloroethane	6	U
56-23-5	Carbon Tetrachloride	6	U
108-05-4	Vinyl Acetate	11	U
75-27-4	Bromodichloromethane	6	U
78-87-5	1,2-Dichloropropane	6	U
10061-01-5	cis-1,3-Dichloropropene	6	U
79-01-6	Trichloroethene	6	U
124-48-1	Dibromochloromethane	6	U
79-00-5	1,1,2-Trichloroethane	6	U
71-43-2	Benzene	6	U
10061-02-6	trans-1,3-Dichloropropene	6	U
75-25-2	Bromoform	6	U
108-10-1	4-Methyl-2-Pentanone	11	U
591-78-6	2-Hexanone	11	U
127-18-4	Tetrachloroethene	2	J
79-34-5	1,1,2,2-Tetrachloroethane	6	U
108-88-3	Toluene	6	U
108-90-7	Chlorobenzene	6	U
100-41-4	Ethylbenzene	6	U
100-42-5	Styrene	6	U
1330-20-7	Xylene (total)	6	U

1E

VOLATILE ORGANICS ANALYSIS DATA SHEET
TENTATIVELY IDENTIFIED COMPOUNDS

EPA SAMPLE NO.

BW-1-2

Lab Name: PNELI Contract: Y-PAY-MOR

Lab Code: PNELI Case No.: 4121 SAS No.: SDG No.: BW-1-1

Matrix: (soil/water) SOIL Lab Sample ID: 4121-02

Sample wt/vol: 5.0 (g/mL) G Lab File ID: B8241

Level: (low/med) LOW Date Received: 06/11/92

% Moisture: not dec. 11 Date Analyzed: 06/15/92

Column (pack/cap) CAP Dilution Factor: 1.0

Number TICs found: 3

CONCENTRATION UNITS:
(ug/L or ug/Kg) UG/KG

CAS NUMBER	COMPOUND NAME	RT	EST. CONC.	Q
1.	Unknown	11.98	2.2	J
2.	Unknown alkylcyclohexane	12.87	16	JN
3.	Unknown C4-alkylbenzene	14.15	3.4	JN

1A
VOLATILE ORGANICS ANALYSIS DATA SHEET

EPA SAMPLE NO.

BW-1-3

Lab Name: PNELI Contract: Y-PAY-MOR

Lab Code: PNELI Case No.: 4121 SAS No.: SDG No.: BW-1-1

Matrix: (soil/water) SOIL Lab Sample ID: 4121-03

Sample wt/vol: 5.0 (g/mL) G Lab File ID: B8226

Level: (low/med) LOW Date Received: 06/11/92

% Moisture: not dec. 12 Date Analyzed: 06/12/92

Column: (pack/cap) CAP Dilution Factor: 1.0

CAS NO.	COMPOUND	CONCENTRATION UNITS: (ug/L or ug/Kg) UG/KG	Q
74-87-3	Chloromethane	11	U
74-83-9	Bromomethane	11	U
75-01-4	Vinyl Chloride	11	U
75-00-3	Chloroethane	11	U
75-09-2	Methylene Chloride	6	U
67-64-1	Acetone	11	J
75-15-0	Carbon Disulfide	6	U
75-35-4	1,1-Dichloroethene	6	U
75-34-3	1,1-Dichloroethane	6	U
156-60-5	trans-1,2-Dichloroethene	6	U
156-59-2	cis-1,2-Dichloroethene	6	U
67-66-3	Chloroform	6	U
107-06-2	1,2-Dichloroethane	6	U
78-93-3	2-Butanone	11	U
71-55-6	1,1,1-Trichloroethane	6	U
56-23-5	Carbon Tetrachloride	6	U
108-05-4	Vinyl Acetate	11	U
75-27-4	Bromodichloromethane	6	U
78-87-5	1,2-Dichloropropane	6	U
10061-01-5	cis-1,3-Dichloropropene	6	U
79-01-6	Trichloroethene	6	U
124-48-1	Dibromochloromethane	6	U
79-00-5	1,1,2-Trichloroethane	6	U
71-43-2	Benzene	6	U
10061-02-6	trans-1,3-Dichloropropene	6	U
75-25-2	Bromoform	6	U
108-10-1	4-Methyl-2-Pentanone	11	U
591-78-6	2-Hexanone	11	U
127-18-4	Tetrachloroethene	6	U
79-34-5	1,1,2,2-Tetrachloroethane	6	U
108-88-3	Toluene	6	U
108-90-7	Chlorobenzene	6	U
100-41-4	Ethylbenzene	6	U
100-42-5	Styrene	6	U
1330-20-7	Xylene (total)	6	U

1E

VOLATILE ORGANICS ANALYSIS DATA SHEET
TENTATIVELY IDENTIFIED COMPOUNDS

EPA SAMPLE NO.

BW-1-3

Lab Name: PNELI_____ Contract: Y-PAY-MOR__

Lab Code: PNELI__ Case No.: 4121__ SAS No.: _____ SDG No.: BW-1-1

Matrix: (soil/water) SOIL__ Lab Sample ID: 4121-03_____

Sample wt/vol: __5.0 (g/mL) G___ Lab File ID: B8226_____

Level: (low/med) LOW___ Date Received: 06/11/92

% Moisture: not dec. __12 Date Analyzed: 06/12/92

Column (pack/cap) CAP___ Dilution Factor: 1.0_____

Number TICs found: __0

CONCENTRATION UNITS:
(ug/L or ug/Kg) UG/KG

CAS NUMBER	COMPOUND NAME	RT	EST. CONC.	Q

1A

VOLATILE ORGANICS ANALYSIS DATA SHEET

EPA SAMPLE NO.

BW-1-4

Lab Name: PNELI Contract: Y-PAY-MOR

Lab Code: PNELI Case No.: 4121 SAS No.: _____ SDG No.: BW-1-1

Matrix: (soil/water) SOIL Lab Sample ID: 4121-04

Sample wt/vol: 5.0 (g/mL) G Lab File ID: B8231

Level: (low/med) LOW Date Received: 06/11/92

% Moisture: not dec. 14 Date Analyzed: 06/12/92

Column: (pack/cap) CAP Dilution Factor: 1.0

CAS NO.	COMPOUND	CONCENTRATION UNITS: (ug/L or ug/Kg) UG/KG	Q
74-87-3	Chloromethane	12	U
74-83-9	Bromomethane	12	U
75-01-4	Vinyl Chloride	12	U
75-00-3	Chloroethane	12	U
75-09-2	Methylene Chloride	9	B
67-64-1	Acetone	7	J
75-15-0	Carbon Disulfide	6	U
75-35-4	1,1-Dichloroethene	6	U
75-34-3	1,1-Dichloroethane	6	U
156-60-5	trans-1,2-Dichloroethene	6	U
156-59-2	cis-1,2-Dichloroethene	6	U
67-66-3	Chloroform	6	U
107-06-2	1,2-Dichloroethane	6	U
78-93-3	2-Butanone	12	U
71-55-6	1,1,1-Trichloroethane	6	U
56-23-5	Carbon Tetrachloride	6	U
108-05-4	Vinyl Acetate	12	U
75-27-4	Bromodichloromethane	6	U
78-87-5	1,2-Dichloropropane	6	U
10061-01-5	cis-1,3-Dichloropropene	6	U
79-01-6	Trichloroethene	6	U
124-48-1	Dibromochloromethane	6	U
79-00-5	1,1,2-Trichloroethane	6	U
71-43-2	Benzene	6	U
10061-02-6	trans-1,3-Dichloropropene	6	U
75-25-2	Bromoform	6	U
108-10-1	4-Methyl-2-Pentanone	12	U
591-78-6	2-Hexanone	12	U
127-18-4	Tetrachloroethene	6	U
79-34-5	1,1,2,2-Tetrachloroethane	6	U
108-88-3	Toluene	6	U
108-90-7	Chlorobenzene	6	U
100-41-4	Ethylbenzene	6	U
100-42-5	Styrene	6	U
1330-20-7	Xylene (total)	6	U

1E

VOLATILE ORGANICS ANALYSIS DATA SHEET
TENTATIVELY IDENTIFIED COMPOUNDS

EPA SAMPLE NO.

BW-1-4

Lab Name: PNELI_____ Contract: Y-PAY-MOR__

Lab Code: PNELI__ Case No.: 4121__ SAS No.: _____ SDG No.: BW-1-1

Matrix: (soil/water) SOIL__ Lab Sample ID: 4121-04_____

Sample wt/vol: __5.0 (g/mL) G___ Lab File ID: B8231_____

Level: (low/med) LOW___ Date Received: 06/11/92

% Moisture: not dec. __14 Date Analyzed: 06/12/92

Column (pack/cap) CAP___ Dilution Factor: 1.0_____

Number TICs found: __0

CONCENTRATION UNITS:
(ug/L or ug/Kg) UG/KG

CAS NUMBER	COMPOUND NAME	RT	EST. CONC.	Q

FORM I VOA-TIC 1/87 Rev.

000008

1A

VOLATILE ORGANICS ANALYSIS DATA SHEET

EPA SAMPLE NO.

BW-2-1

Lab Name: PNELI Contract: Y-PAY-MOR

Lab Code: PNELI Case No.: 4121 SAS No.: SDG No.: BW-1-1

Matrix: (soil/water) SOIL Lab Sample ID: 4121-05

Sample wt/vol: 4.0 (g/mL) G Lab File ID: A1129

Level: (low/med) MED Date Received: 06/11/92

% Moisture: not dec. 18 Date Analyzed: 06/11/92

Column: (pack/cap) CAP Dilution Factor: 1.0

CAS NO.	COMPOUND	CONCENTRATION UNITS: (ug/L or ug/Kg) UG/KG	Q
74-87-3	Chloromethane	1500	U
74-83-9	Bromomethane	1500	U
75-01-4	Vinyl Chloride	530	J
75-00-3	Chloroethane	1500	U
75-09-2	Methylene Chloride	880	B
67-64-1	Acetone	1200	BJ
75-15-0	Carbon Disulfide	760	U
75-35-4	1,1-Dichloroethene	760	U
75-34-3	1,1-Dichloroethane	760	U
156-60-5	trans-1,2-Dichloroethene	5600	
156-59-2	cis-1,2-Dichloroethene	3900	
67-66-3	Chloroform	760	U
107-06-2	1,2-Dichloroethane	760	U
78-93-3	2-Butanone	690	J
71-55-6	1,1,1-Trichloroethane	760	U
56-23-5	Carbon Tetrachloride	760	U
108-05-4	Vinyl Acetate	1500	U
75-27-4	Bromodichloromethane	760	U
78-87-5	1,2-Dichloropropane	760	U
10061-01-5	cis-1,3-Dichloropropene	760	U
79-01-6	Trichloroethene	7500	
124-48-1	Dibromochloromethane	760	U
79-00-5	1,1,2-Trichloroethane	760	U
71-43-2	Benzene	760	U
10061-02-6	trans-1,3-Dichloropropene	760	U
75-25-2	Bromoform	760	U
108-10-1	4-Methyl-2-Pentanone	1500	U
591-78-6	2-Hexanone	1500	U
127-18-4	Tetrachloroethene	160000	E
79-34-5	1,1,2,2-Tetrachloroethane	3100	
108-88-3	Toluene	760	U
108-90-7	Chlorobenzene	760	U
100-41-4	Ethylbenzene	760	U
100-42-5	Styrene	760	U
1330-20-7	Xylene (total)	760	U

1A
VOLATILE ORGANICS ANALYSIS DATA SHEET

EPA SAMPLE NO.

BW-2-3

Lab Name: PNELI Contract: Y-PAY-MOR

Lab Code: PNELI Case No.: 4121 SAS No.: _____ SDG No.: BW-1-1

Matrix: (soil/water) SOIL Lab Sample ID: 4121-07

Sample wt/vol: 5.0 (g/mL) G Lab File ID: B8233

Level: (low/med) LOW Date Received: 06/11/92

% Moisture: not dec. 11 Date Analyzed: 06/12/92

Column: (pack/cap) CAP Dilution Factor: 1.0

CAS NO.	COMPOUND	CONCENTRATION UNITS: (ug/L or ug/Kg) UG/KG	Q
74-87-3	Chloromethane	11	U
74-83-9	Bromomethane	11	U
75-01-4	Vinyl Chloride	11	U
75-00-3	Chloroethane	11	U
75-09-2	Methylene Chloride	6	B
67-64-1	Acetone	17	
75-15-0	Carbon Disulfide	6	U
75-35-4	1,1-Dichloroethene	6	U
75-34-3	1,1-Dichloroethane	6	U
156-60-5	trans-1,2-Dichloroethene	6	U
156-59-2	cis-1,2-Dichloroethene	1	J
67-66-3	Chloroform	6	U
107-06-2	1,2-Dichloroethane	6	U
78-93-3	2-Butanone	11	U
71-55-6	1,1,1-Trichloroethane	6	U
56-23-5	Carbon Tetrachloride	6	U
108-05-4	Vinyl Acetate	11	U
75-27-4	Bromodichloromethane	6	U
78-87-5	1,2-Dichloropropane	6	U
10061-01-5	cis-1,3-Dichloropropene	6	U
79-01-6	Trichloroethene	6	U
124-48-1	Dibromochloromethane	6	U
79-00-5	1,1,2-Trichloroethane	6	U
71-43-2	Benzene	6	U
10061-02-6	trans-1,3-Dichloropropene	6	U
75-25-2	Bromoform	6	U
108-10-1	4-Methyl-2-Pentanone	11	U
591-78-6	2-Hexanone	11	U
127-18-4	Tetrachloroethene	55	
79-34-5	1,1,2,2-Tetrachloroethane	6	U
108-88-3	Toluene	6	U
108-90-7	Chlorobenzene	6	U
100-41-4	Ethylbenzene	6	U
100-42-5	Styrene	6	U
1330-20-7	Xylene (total)	6	U

1A
VOLATILE ORGANICS ANALYSIS DATA SHEET

EPA SAMPLE NO.

BW-2-4

Lab Name: PNELI Contract: Y-PAY-MOR

Lab Code: PNELI Case No.: 4121 SAS No.: SDG No.: BW-1-1

Matrix: (soil/water) SOIL Lab Sample ID: 4121-08

Sample wt/vol: 4.0 (g/mL) G Lab File ID: A1132

Level: (low/med) MED Date Received: 06/11/92

% Moisture: not dec. 20 Date Analyzed: 06/11/92

Column: (pack/cap) CAP Dilution Factor: 1.0

CAS NO.	COMPOUND	CONCENTRATION UNITS: (ug/L or ug/Kg) UG/KG	Q
74-87-3	Chloromethane	1600	U
74-83-9	Bromomethane	1600	U
75-01-4	Vinyl Chloride	1600	U
75-00-3	Chloroethane	1600	U
75-09-2	Methylene Chloride	460	BJ
67-64-1	Acetone	1600	U
75-15-0	Carbon Disulfide	780	U
75-35-4	1,1-Dichloroethene	780	U
75-34-3	1,1-Dichloroethane	780	U
156-60-5	trans-1,2-Dichloroethene	780	U
156-59-2	cis-1,2-Dichloroethene	250	J
67-66-3	Chloroform	780	U
107-06-2	1,2-Dichloroethane	780	U
78-93-3	2-Butanone	1600	U
71-55-6	1,1,1-Trichloroethane	780	U
56-23-5	Carbon Tetrachloride	780	U
108-05-4	Vinyl Acetate	1600	U
75-27-4	Bromodichloromethane	780	U
78-87-5	1,2-Dichloropropane	780	U
10061-01-5	cis-1,3-Dichloropropene	780	U
79-01-6	Trichloroethene	780	U
124-48-1	Dibromochloromethane	780	U
79-00-5	1,1,2-Trichloroethane	780	U
71-43-2	Benzene	780	U
10061-02-6	trans-1,3-Dichloropropene	780	U
75-25-2	Bromoform	780	U
108-10-1	4-Methyl-2-Pentanone	1600	U
591-78-6	2-Hexanone	1600	U
127-18-4	Tetrachloroethene	39000	E
79-34-5	1,1,2,2-Tetrachloroethane	780	U
108-88-3	Toluene	780	U
108-90-7	Chlorobenzene	780	U
100-41-4	Ethylbenzene	780	U
100-42-5	Styrene	780	U
1330-20-7	Xylene (total)	780	U

000017

1E

VOLATILE ORGANICS ANALYSIS DATA SHEET
TENTATIVELY IDENTIFIED COMPOUNDS

EPA SAMPLE NO.

BW-2-1

Lab Name: PNELI_____ Contract: Y-PAY-MOR__

Lab Code: PNELI__ Case No.: 4121__ SAS No.: _____ SDG No.: BW-1-1

Matrix: (soil/water) SOIL__ Lab Sample ID: 4121-05_____

Sample wt/vol: __4.0 (g/mL) G___ Lab File ID: A1129_____

Level: (low/med) MED___ Date Received: 06/11/92

% Moisture: not dec. __18 Date Analyzed: 06/11/92

Column (pack/cap) CAP___ Dilution Factor: 1.0_____

Number TICs found: __0

CONCENTRATION UNITS:
(ug/L or ug/Kg) UG/KG

CAS NUMBER	COMPOUND NAME	RT	EST. CONC.	Q

1A
VOLATILE ORGANICS ANALYSIS DATA SHEET

EPA SAMPLE NO.

BW-2-1DL

Lab Name: PNELI Contract: Y-PAY-MOR

Lab Code: PNELI Case No.: 4121 SAS No.: _____ SDG No.: BW-1-1

Matrix: (soil/water) SOIL Lab Sample ID: 4121-05DL

Sample wt/vol: 4.0 (g/mL) G Lab File ID: A1149

Level: (low/med) MED Date Received: 06/11/92

% Moisture: not dec. 18 Date Analyzed: 06/12/92

Column: (pack/cap) CAP Dilution Factor: 10

CAS NO.	COMPOUND	CONCENTRATION UNITS: (ug/L or ug/Kg) UG/KG	Q
74-87-3	Chloromethane	15000	U
74-83-9	Bromomethane	15000	U
75-01-4	Vinyl Chloride	15000	U
75-00-3	Chloroethane	15000	U
75-09-2	Methylene Chloride	7600	U
67-64-1	Acetone	5300	BDJ
75-15-0	Carbon Disulfide	7600	U
75-35-4	1,1-Dichloroethene	7600	U
75-34-3	1,1-Dichloroethane	7600	U
156-60-5	trans-1,2-Dichloroethene	7600	U
156-59-2	cis-1,2-Dichloroethene	4500	DJ
67-66-3	Chloroform	7600	U
107-06-2	1,2-Dichloroethane	7600	U
78-93-3	2-Butanone	15000	U
71-55-6	1,1,1-Trichloroethane	7600	U
56-23-5	Carbon Tetrachloride	7600	U
108-05-4	Vinyl Acetate	15000	U
75-27-4	Bromodichloromethane	7600	U
78-87-5	1,2-Dichloropropane	7600	U
10061-01-5	cis-1,3-Dichloropropene	7600	U
79-01-6	Trichloroethene	7600	U
124-48-1	Dibromochloromethane	7600	U
79-00-5	1,1,2-Trichloroethane	7600	U
71-43-2	Benzene	7600	U
10061-02-6	trans-1,3-Dichloropropene	7600	U
75-25-2	Bromoform	7600	U
108-10-1	4-Methyl-2-Pentanone	15000	U
591-78-6	2-Hexanone	15000	U
127-18-4	Tetrachloroethene	260000	D
79-34-5	1,1,2,2-Tetrachloroethane	7600	U
108-88-3	Toluene	7600	U
108-90-7	Chlorobenzene	7600	U
100-41-4	Ethylbenzene	7600	U
100-42-5	Styrene	7600	U
1330-20-7	Xylene (total)	7600	U

1E

VOLATILE ORGANICS ANALYSIS DATA SHEET
TENTATIVELY IDENTIFIED COMPOUNDS

EPA SAMPLE NO.

BW-2-1DL

Lab Name: PNELI_____ Contract: Y-PAY-MOR__

Lab Code: PNELI__ Case No.: 4121__ SAS No.: _____ SDG No.: BW-1-1

Matrix: (soil/water) SOIL__ Lab Sample ID: 4121-05DL____

Sample wt/vol: __4.0 (g/mL) G___ Lab File ID: A1149_____

Level: (low/med) MED___ Date Received: 06/11/92

% Moisture: not dec. __18 Date Analyzed: 06/12/92

Column (pack/cap) CAP___ Dilution Factor: 10_____

Number TICs found: __0

CONCENTRATION UNITS:
(ug/L or ug/Kg) UG/KG

CAS NUMBER	COMPOUND NAME	RT	EST. CONC.	Q

000012

1A

VOLATILE ORGANICS ANALYSIS DATA SHEET

EPA SAMPLE NO.

BW-2-2

Lab Name: PNELI Contract: Y-PAY-MOR

Lab Code: PNELI Case No.: 4121 SAS No.: SDG No.: BW-1-1

Matrix: (soil/water) SOIL Lab Sample ID: 4121-06

Sample wt/vol: 1.0 (g/mL) G Lab File ID: B8225

Level: (low/med) LOW Date Received: 06/11/92

% Moisture: not dec. 13 Date Analyzed: 06/12/92

Column: (pack/cap) CAP Dilution Factor: 1.0

CAS NO.	COMPOUND	CONCENTRATION UNITS: (ug/L or ug/Kg) UG/KG	Q
74-87-3	Chloromethane	57	U
74-83-9	Bromomethane	57	U
75-01-4	Vinyl Chloride	57	U
75-00-3	Chloroethane	57	U
75-09-2	Methylene Chloride	31	B
67-64-1	Acetone	51	J
75-15-0	Carbon Disulfide	29	U
75-35-4	1,1-Dichloroethene	29	U
75-34-3	1,1-Dichloroethane	29	U
156-60-5	trans-1,2-Dichloroethene	29	U
156-59-2	cis-1,2-Dichloroethene	29	U
67-66-3	Chloroform	29	U
107-06-2	1,2-Dichloroethane	29	U
78-93-3	2-Butanone	57	U
71-55-6	1,1,1-Trichloroethane	29	U
56-23-5	Carbon Tetrachloride	29	U
108-05-4	Vinyl Acetate	57	U
75-27-4	Bromodichloromethane	29	U
78-87-5	1,2-Dichloropropane	29	U
10061-01-5	cis-1,3-Dichloropropene	29	U
79-01-6	Trichloroethene	29	U
124-48-1	Dibromochloromethane	29	U
79-00-5	1,1,2-Trichloroethane	29	U
71-43-2	Benzene	29	U
10061-02-6	trans-1,3-Dichloropropene	29	U
75-25-2	Bromoform	29	U
108-10-1	4-Methyl-2-Pentanone	57	U
591-78-6	2-Hexanone	57	U
127-18-4	Tetrachloroethene	340	
79-34-5	1,1,2,2-Tetrachloroethane	29	U
108-88-3	Toluene	29	U
108-90-7	Chlorobenzene	29	U
100-41-4	Ethylbenzene	29	U
100-42-5	Styrene	29	U
1330-20-7	Xylene (total)	29	U

1E

VOLATILE ORGANICS ANALYSIS DATA SHEET
TENTATIVELY IDENTIFIED COMPOUNDS

EPA SAMPLE NO.

BW-2-2

Lab Name: PNELI_____ Contract: Y-PAY-MOR__

Lab Code: PNELI__ Case No.: 4121__ SAS No.: _____ SDG No.: BW-1-1

Matrix: (soil/water) SOIL__ Lab Sample ID: 4121-06_____

Sample wt/vol: __1.0 (g/mL) G___ Lab File ID: B8225_____

Level: (low/med) LOW___ Date Received: 06/11/92

% Moisture: not dec. __13 Date Analyzed: 06/12/92

Column (pack/cap) CAP___ Dilution Factor: 1.0_____

Number TICs found: __0

CONCENTRATION UNITS:
(ug/L or ug/Kg) UG/KG

CAS NUMBER	COMPOUND NAME	RT	EST. CONC.	Q

000014

1E

VOLATILE ORGANICS ANALYSIS DATA SHEET
TENTATIVELY IDENTIFIED COMPOUNDS

EPA SAMPLE NO.

B7-S3

Lab Name: PNELI_____ Contract: Y-PAY-MOR__

Lab Code: PNELI__ Case No.: 4329__ SAS No.: _____ SDG No.: B5-S4_

Matrix: (soil/water) SOIL__ Lab Sample ID: 4329-06_____

Sample wt/vol: __5.0 (g/mL) G___ Lab File ID: B8814_____

Level: (low/med) LOW___ Date Received: 08/31/92

% Moisture: not dec. __11 Date Analyzed: 09/02/92

Column (pack/cap) CAP___ Dilution Factor: 1.0_____

Number TICs found: __0

CONCENTRATION UNITS:
(ug/L or ug/Kg) UG/KG

CAS NUMBER	COMPOUND NAME	RT	EST. CONC.	Q

1E

VOLATILE ORGANICS ANALYSIS DATA SHEET
TENTATIVELY IDENTIFIED COMPOUNDS

EPA SAMPLE NO.

BW-2-3

Lab Name: PNELI_____ Contract: Y-PAY-MOR__

Lab Code: PNELI__ Case No.: 4121__ SAS No.: _____ SDG No.: BW-1-1

Matrix: (soil/water) SOIL__ Lab Sample ID: 4121-07_____

Sample wt/vol: __5.0 (g/mL) G___ Lab File ID: B8233_____

Level: (low/med) LOW___ Date Received: 06/11/92

% Moisture: not dec. __11 Date Analyzed: 06/12/92

Column (pack/cap) CAP___ Dilution Factor: 1.0_____

Number TICs found: __2

CONCENTRATION UNITS:
(ug/L or ug/Kg) UG/KG

CAS NUMBER	COMPOUND NAME	RT	EST. CONC.	Q
1.	Unknown	16.03	2.2	J
2.	Bicycloheptanone, trimethyl-	17.30	3.4	JN

000016

1E

VOLATILE ORGANICS ANALYSIS DATA SHEET
TENTATIVELY IDENTIFIED COMPOUNDS

EPA SAMPLE NO.

BW-2-4

Lab Name: PNELI Contract: Y-PAY-MOR

Lab Code: PNELI Case No.: 4121 SAS No.: _____ SDG No.: BW-1-1

Matrix: (soil/water) SOIL Lab Sample ID: 4121-08

Sample wt/vol: 4.0 (g/mL) G Lab File ID: A1132

Level: (low/med) MED Date Received: 06/11/92

% Moisture: not dec. 20 Date Analyzed: 06/11/92

Column (pack/cap) CAP Dilution Factor: 1.0

Number TICs found: 0

CONCENTRATION UNITS:
(ug/L or ug/Kg) UG/KG

CAS NUMBER	COMPOUND NAME	RT	EST. CONC.	Q

1A

VOLATILE ORGANICS ANALYSIS DATA SHEET

EPA SAMPLE NO.

BW-2-4DL

Lab Name: PNELI Contract: Y-PAY-MOR

Lab Code: PNELI Case No.: 4121 SAS No.: _____ SDG No.: BW-1-1

Matrix: (soil/water) SOIL Lab Sample ID: 4121-08DL

Sample wt/vol: 4.0 (g/mL) G Lab File ID: A1181

Level: (low/med) MED Date Received: 06/11/92

% Moisture: not dec. 20 Date Analyzed: 06/17/92

Column: (pack/cap) CAP Dilution Factor: 2.0

CAS NO.	COMPOUND	CONCENTRATION UNITS: (ug/L or ug/Kg) UG/KG	Q
74-87-3	Chloromethane	3100	U
74-83-9	Bromomethane	3100	U
75-01-4	Vinyl Chloride	3100	U
75-00-3	Chloroethane	3100	U
75-09-2	Methylene Chloride	1200	BDJ
67-64-1	Acetone	3100	U
75-15-0	Carbon Disulfide	1600	U
75-35-4	1,1-Dichloroethene	1600	U
75-34-3	1,1-Dichloroethane	1600	U
156-60-5	trans-1,2-Dichloroethene	1600	U
156-59-2	cis-1,2-Dichloroethene	1400	DJ
67-66-3	Chloroform	1600	U
107-06-2	1,2-Dichloroethane	1600	U
78-93-3	2-Butanone	3100	U
71-55-6	1,1,1-Trichloroethane	1600	U
56-23-5	Carbon Tetrachloride	1600	U
108-05-4	Vinyl Acetate	3100	U
75-27-4	Bromodichloromethane	1600	U
78-87-5	1,2-Dichloropropane	1600	U
10061-01-5	cis-1,3-Dichloropropene	1600	U
79-01-6	Trichloroethene	1600	U
124-48-1	Dibromochloromethane	1600	U
79-00-5	1,1,2-Trichloroethane	1600	U
71-43-2	Benzene	1600	U
10061-02-6	trans-1,3-Dichloropropene	1600	U
75-25-2	Bromoform	1600	U
108-10-1	4-Methyl-2-Pentanone	3100	U
591-78-6	2-Hexanone	3100	U
127-18-4	Tetrachloroethene	53000	D
79-34-5	1,1,2,2-Tetrachloroethane	1600	U
108-88-3	Toluene	1600	U
108-90-7	Chlorobenzene	1600	U
100-41-4	Ethylbenzene	1600	U
100-42-5	Styrene	1600	U
1330-20-7	Xylene (total)	1600	U

000019

1E

VOLATILE ORGANICS ANALYSIS DATA SHEET
TENTATIVELY IDENTIFIED COMPOUNDS

EPA SAMPLE NO.

BW-2-4DL

Lab Name: PNELI_____ Contract: Y-PAY-MOR__

Lab Code: PNELI__ Case No.: 4121__ SAS No.: _____ SDG No.: BW-1-1

Matrix: (soil/water) SOIL__ Lab Sample ID: 4121-08DL____

Sample wt/vol: __4.0 (g/mL) G___ Lab File ID: A1181_____

Level: (low/med) MED___ Date Received: 06/11/92

% Moisture: not dec. __20 Date Analyzed: 06/17/92

Column (pack/cap) CAP___ Dilution Factor: 2.0_____

CONCENTRATION UNITS:
(ug/L or ug/Kg) UG/KG

Number TICs found: __0

CAS NUMBER	COMPOUND NAME	RT	EST. CONC.	Q

000020

1A

VOLATILE ORGANICS ANALYSIS DATA SHEET

EPA SAMPLE NO.

BW-3-1

Lab Name: PNELI Contract: Y-PAY-MOR

Lab Code: PNELI Case No.: 4121 SAS No.: _____ SDG No.: BW-1-1

Matrix: (soil/water) SOIL Lab Sample ID: 4121-09

Sample wt/vol: 5.0 (g/mL) G Lab File ID: B8234

Level: (low/med) LOW Date Received: 06/11/92

% Moisture: not dec. 25 Date Analyzed: 06/12/92

Column: (pack/cap) CAP Dilution Factor: 1.0

CAS NO.	COMPOUND	CONCENTRATION UNITS: (ug/L or ug/Kg) UG/KG	Q
74-87-3	Chloromethane	13	U
74-83-9	Bromomethane	13	U
75-01-4	Vinyl Chloride	13	U
75-00-3	Chloroethane	13	U
75-09-2	Methylene Chloride	9	B
67-64-1	Acetone	47	
75-15-0	Carbon Disulfide	7	U
75-35-4	1,1-Dichloroethene	7	U
75-34-3	1,1-Dichloroethane	7	U
156-60-5	trans-1,2-Dichloroethene	7	U
156-59-2	cis-1,2-Dichloroethene	10	
67-66-3	Chloroform	7	U
107-06-2	1,2-Dichloroethane	7	U
78-93-3	2-Butanone	12	J
71-55-6	1,1,1-Trichloroethane	7	U
56-23-5	Carbon Tetrachloride	7	U
108-05-4	Vinyl Acetate	13	U
75-27-4	Bromodichloromethane	7	U
78-87-5	1,2-Dichloropropane	7	U
10061-01-5	cis-1,3-Dichloropropene	7	U
79-01-6	Trichloroethene	2	J
124-48-1	Dibromochloromethane	7	U
79-00-5	1,1,2-Trichloroethane	7	U
71-43-2	Benzene	7	U
10061-02-6	trans-1,3-Dichloropropene	7	U
75-25-2	Bromoform	7	U
108-10-1	4-Methyl-2-Pentanone	13	U
591-78-6	2-Hexanone	13	U
127-18-4	Tetrachloroethene	28	
79-34-5	1,1,2,2-Tetrachloroethane	7	U
108-88-3	Toluene	7	U
108-90-7	Chlorobenzene	7	U
100-41-4	Ethylbenzene	7	U
100-42-5	Styrene	7	U
1330-20-7	Xylene (total)	7	U

1E

VOLATILE ORGANICS ANALYSIS DATA SHEET
TENTATIVELY IDENTIFIED COMPOUNDS

EPA SAMPLE NO.

BW-3-1

Lab Name: PNELI Contract: Y-PAY-MOR

Lab Code: PNELI Case No.: 4121 SAS No.: _____ SDG No.: BW-1-1

Matrix: (soil/water) SOIL Lab Sample ID: 4121-09

Sample wt/vol: 5.0 (g/mL) G Lab File ID: B8234

Level: (low/med) LOW Date Received: 06/11/92

% Moisture: not dec. 25 Date Analyzed: 06/12/92

Column (pack/cap) CAP Dilution Factor: 1.0

Number TICs found: 7

CONCENTRATION UNITS:
(ug/L or ug/Kg) UG/KG

CAS NUMBER	COMPOUND NAME	RT	EST. CONC.	Q
1.	Unknown terpene	12.06	21	JN
2.	Unknown terpene	12.48	5.3	JN
3.	Unknown alkylcyclohexane	12.93	44	JN
4.	Bicycloheptane, trimethyl-	13.08	12	JN
5.	Unknown terpene	14.14	8.0	JN
6.	Unknown	16.04	4.0	JN
7.	Bicycloheptanone, trimethyl-	17.32	5.3	JN

1A
VOLATILE ORGANICS ANALYSIS DATA SHEET

EPA SAMPLE NO.

BW-3-2

Lab Name: PNELI Contract: Y-PAY-MOR

Lab Code: PNELI Case No.: 4121 SAS No.: _____ SDG No.: BW-1-1

Matrix: (soil/water) SOIL Lab Sample ID: 4121-10

Sample wt/vol: 5.0 (g/mL) G Lab File ID: B8235

Level: (low/med) LOW Date Received: 06/11/92

% Moisture: not dec. 20 Date Analyzed: 06/12/92

Column: (pack/cap) CAP Dilution Factor: 1.0

CAS NO.	COMPOUND	CONCENTRATION UNITS: (ug/L or ug/Kg) UG/KG	Q
74-87-3	Chloromethane	12	U
74-83-9	Bromomethane	12	U
75-01-4	Vinyl Chloride	12	U
75-00-3	Chloroethane	12	U
75-09-2	Methylene Chloride	6	BJ
67-64-1	Acetone	21	
75-15-0	Carbon Disulfide	6	U
75-35-4	1,1-Dichloroethene	6	U
75-34-3	1,1-Dichloroethane	6	U
156-60-5	trans-1,2-Dichloroethene	6	U
156-59-2	cis-1,2-Dichloroethene	2	J
67-66-3	Chloroform	6	U
107-06-2	1,2-Dichloroethane	6	U
78-93-3	2-Butanone	12	U
71-55-6	1,1,1-Trichloroethane	6	U
56-23-5	Carbon Tetrachloride	6	U
108-05-4	Vinyl Acetate	12	U
75-27-4	Bromodichloromethane	6	U
78-87-5	1,2-Dichloropropane	6	U
10061-01-5	cis-1,3-Dichloropropene	6	U
79-01-6	Trichloroethene	6	J
124-48-1	Dibromochloromethane	6	U
79-00-5	1,1,2-Trichloroethane	6	U
71-43-2	Benzene	6	U
10061-02-6	trans-1,3-Dichloropropene	6	U
75-25-2	Bromoform	6	U
108-10-1	4-Methyl-2-Pentanone	12	U
591-78-6	2-Hexanone	12	U
127-18-4	Tetrachloroethene	2	J
79-34-5	1,1,2,2-Tetrachloroethane	6	U
108-88-3	Toluene	6	U
108-90-7	Chlorobenzene	6	U
100-41-4	Ethylbenzene	6	U
100-42-5	Styrene	6	U
1330-20-7	Xylene (total)	6	U

1E

VOLATILE ORGANICS ANALYSIS DATA SHEET
TENTATIVELY IDENTIFIED COMPOUNDS

EPA SAMPLE NO.

BW-3-2

Lab Name: PNELI_____ Contract: Y-PAY-MOR__

Lab Code: PNELI__ Case No.: 4121__ SAS No.: _____ SDG No.: BW-1-1

Matrix: (soil/water) SOIL__ Lab Sample ID: 4121-10_____

Sample wt/vol: __5.0 (g/mL) G___ Lab File ID: B8235_____

Level: (low/med) LOW___ Date Received: 06/11/92

% Moisture: not dec. __20 Date Analyzed: 06/12/92

Column (pack/cap) CAP___ Dilution Factor: 1.0_____

Number TICs found: __0

CONCENTRATION UNITS:
(ug/L or ug/Kg) UG/KG

CAS NUMBER	COMPOUND NAME	RT	EST. CONC.	Q

FORM I VOA-TIC 1/87 Rev.

000024

1A
VOLATILE ORGANICS ANALYSIS DATA SHEET

EPA SAMPLE NO.

BW-3-3

Lab Name: PNELI Contract: Y-PAY-MDR

Lab Code: PNELI Case No.: 4121 SAS No.: SDG No.: BW-1-1

Matrix: (soil/water) SOIL Lab Sample ID: 4121-11

Sample wt/vol: 5.0 (g/mL) G Lab File ID: B8216

Level: (low/med) LOW Date Received: 06/11/92

% Moisture: not dec. 11 Date Analyzed: 06/11/92

Column: (pack/cap) CAP Dilution Factor: 1.0

CAS NO.	COMPOUND	CONCENTRATION UNITS: (ug/L or ug/Kg) UG/KG	Q
74-87-3	Chloromethane	11	U
74-83-9	Bromomethane	11	U
75-01-4	Vinyl Chloride	11	U
75-00-3	Chloroethane	11	U
75-09-2	Methylene Chloride	5	BJ
67-64-1	Acetone	11	U
75-15-0	Carbon Disulfide	6	U
75-35-4	1,1-Dichloroethene	6	U
75-34-3	1,1-Dichloroethane	6	U
156-60-5	trans-1,2-Dichloroethene	6	U
156-59-2	cis-1,2-Dichloroethene	6	U
67-66-3	Chloroform	6	U
107-06-2	1,2-Dichloroethane	6	U
78-93-3	2-Butanone	11	U
71-55-6	1,1,1-Trichloroethane	6	U
56-23-5	Carbon Tetrachloride	6	U
108-05-4	Vinyl Acetate	11	U
75-27-4	Bromodichloromethane	6	U
78-87-5	1,2-Dichloropropane	6	U
10061-01-5	cis-1,3-Dichloropropene	6	U
79-01-6	Trichloroethene	6	U
124-48-1	Dibromochloromethane	6	U
79-00-5	1,1,2-Trichloroethane	6	U
71-43-2	Benzene	6	U
10061-02-6	trans-1,3-Dichloropropene	6	U
75-25-2	Bromoform	6	U
108-10-1	4-Methyl-2-Pentanone	11	U
591-78-6	2-Hexanone	11	U
127-18-4	Tetrachloroethene	6	U
79-34-5	1,1,2,2-Tetrachloroethane	6	U
108-88-3	Toluene	6	U
108-90-7	Chlorobenzene	6	U
100-41-4	Ethylbenzene	6	U
100-42-5	Styrene	6	U
1330-20-7	Xylene (total)	6	U

1E

VOLATILE ORGANICS ANALYSIS DATA SHEET
TENTATIVELY IDENTIFIED COMPOUNDS

EPA SAMPLE NO.

BW-3-3

Lab Name: PNELI Contract: Y-PAY-MOR

Lab Code: PNELI Case No.: 4121 SAS No.: _____ SDG No.: BW-1-1

Matrix: (soil/water) SOIL Lab Sample ID: 4121-11

Sample wt/vol: 5.0 (g/mL) G Lab File ID: B8216

Level: (low/med) LOW Date Received: 06/11/92

% Moisture: not dec. 11 Date Analyzed: 06/11/92

Column (pack/cap) CAP Dilution Factor: 1.0

Number TICs found: 0

CONCENTRATION UNITS:
(ug/L or ug/Kg) UG/KG

CAS NUMBER	COMPOUND NAME	RT	EST. CONC.	Q

1A
VOLATILE ORGANICS ANALYSIS DATA SHEET

EPA SAMPLE NO.

BW-3-3B

Lab Name: PNELI Contract: Y-PAY-MOR

Lab Code: PNELI Case No.: 4121 SAS No.: SDG No.: BW-1-1

Matrix: (soil/water) WATER Lab Sample ID: 4121-12

Sample wt/vol: 5.0 (g/mL) ML Lab File ID: A1152

Level: (low/med) LOW Date Received: 06/11/92

% Moisture: not dec. Date Analyzed: 06/12/92

Column: (pack/cap) CAP Dilution Factor: 1.0

CAS NO.	COMPOUND	CONCENTRATION UNITS: (ug/L or ug/Kg) UG/L	Q
74-87-3	Chloromethane	10	U
74-83-9	Bromomethane	10	U
75-01-4	Vinyl Chloride	10	U
75-00-3	Chloroethane	10	U
75-09-2	Methylene Chloride	5	U
67-64-1	Acetone	5	BJ
75-15-0	Carbon Disulfide	5	U
75-35-4	1,1-Dichloroethene	5	U
75-34-3	1,1-Dichloroethane	5	U
156-60-5	trans-1,2-Dichloroethene	2	J
156-59-2	cis-1,2-Dichloroethene	48	
67-66-3	Chloroform	5	U
107-06-2	1,2-Dichloroethane	5	U
78-93-3	2-Butanone	10	U
71-55-6	1,1,1-Trichloroethane	5	U
56-23-5	Carbon Tetrachloride	5	U
108-05-4	Vinyl Acetate	10	U
75-27-4	Bromodichloromethane	5	U
78-87-5	1,2-Dichloropropane	5	U
10061-01-5	cis-1,3-Dichloropropene	5	U
79-01-6	Trichloroethene	33	
124-48-1	Dibromochloromethane	5	U
79-00-5	1,1,2-Trichloroethane	5	U
71-43-2	Benzene	5	U
10061-02-6	trans-1,3-Dichloropropene	5	U
75-25-2	Bromoform	5	U
108-10-1	4-Methyl-2-Pentanone	10	U
591-78-6	2-Hexanone	10	U
127-18-4	Tetrachloroethene	20	
79-34-5	1,1,2,2-Tetrachloroethane	5	U
108-88-3	Toluene	5	U
108-90-7	Chlorobenzene	5	U
100-41-4	Ethylbenzene	5	U
100-42-5	Styrene	5	U
1330-20-7	Xylene (total)	5	U

1E

VOLATILE ORGANICS ANALYSIS DATA SHEET
TENTATIVELY IDENTIFIED COMPOUNDS

EPA SAMPLE NO.

BW-3-3B

Lab Name: PNELI_____ Contract: Y-PAY-MOR__

Lab Code: PNELI__ Case No.: 4121__ SAS No.: _____ SDG No.: BW-1-1

Matrix: (soil/water) WATER_ Lab Sample ID: 4121-12_____

Sample wt/vol: __5.0 (g/mL) ML__ Lab File ID: A1152_____

Level: (low/med) LOW___ Date Received: 06/11/92

% Moisture: not dec. ____ Date Analyzed: 06/12/92

Column (pack/cap) CAP___ Dilution Factor: 1.0_____

Number TICs found: __0

CONCENTRATION UNITS:
(ug/L or ug/Kg) UG/L_

CAS NUMBER	COMPOUND NAME	RT	EST. CONC.	Q

000028

1A

VOLATILE ORGANICS ANALYSIS DATA SHEET

EPA SAMPLE NO.

BW-4-1

Lab Name: PNELI Contract: Y-PAY-MOR

Lab Code: PNELI Case No.: 4121 SAS No.: _____ SDG No.: BW-1-1

Matrix: (soil/water) SOIL Lab Sample ID: 4121-13

Sample wt/vol: 5.0 (g/mL) G Lab File ID: B8232

Level: (low/med) LOW Date Received: 06/11/92

% Moisture: not dec. 30 Date Analyzed: 06/12/92

Column: (pack/cap) CAP Dilution Factor: 1.0

CAS NO.	COMPOUND	CONCENTRATION UNITS: (ug/L or ug/Kg) UG/KG	Q
74-87-3	Chloromethane	14	U
74-83-9	Bromomethane	14	U
75-01-4	Vinyl Chloride	14	U
75-00-3	Chloroethane	14	U
75-09-2	Methylene Chloride	13	B
67-64-1	Acetone	190	
75-15-0	Carbon Disulfide	7	U
75-35-4	1,1-Dichloroethene	7	U
75-34-3	1,1-Dichloroethane	7	U
156-60-5	trans-1,2-Dichloroethene	7	U
156-59-2	cis-1,2-Dichloroethene	66	
67-66-3	Chloroform	7	U
107-06-2	1,2-Dichloroethane	7	U
78-93-3	2-Butanone	32	
71-55-6	1,1,1-Trichloroethane	7	U
56-23-5	Carbon Tetrachloride	7	U
108-05-4	Vinyl Acetate	14	U
75-27-4	Bromodichloromethane	7	U
78-87-5	1,2-Dichloropropane	7	U
10061-01-5	cis-1,3-Dichloropropene	7	U
79-01-6	Trichloroethene	7	U
124-48-1	Dibromochloromethane	7	U
79-00-5	1,1,2-Trichloroethane	7	U
71-43-2	Benzene	7	U
10061-02-6	trans-1,3-Dichloropropene	7	U
75-25-2	Bromoform	7	U
108-10-1	4-Methyl-2-Pentanone	14	U
591-78-6	2-Hexanone	14	U
127-18-4	Tetrachloroethene	13	
79-34-5	1,1,2,2-Tetrachloroethane	7	U
108-88-3	Toluene	6	J
108-90-7	Chlorobenzene	7	U
100-41-4	Ethylbenzene	7	U
100-42-5	Styrene	7	U
1330-20-7	Xylene (total)	7	U

1E

VOLATILE ORGANICS ANALYSIS DATA SHEET
TENTATIVELY IDENTIFIED COMPOUNDS

EPA SAMPLE NO.

BW-4-1

Lab Name: PNELI_____ Contract: Y-PAY-MOR__

Lab Code: PNELI__ Case No.: 4121__ SAS No.: _____ SDG No.: BW-1-1

Matrix: (soil/water) SOIL__ Lab Sample ID: 4121-13_____

Sample wt/vol: __5.0 (g/mL) G___ Lab File ID: B8232_____

Level: (low/med) LOW___ Date Received: 06/11/92

% Moisture: not dec. __30 Date Analyzed: 06/12/92

Column (pack/cap) CAP___ Dilution Factor: 1.0_____

Number TICs found: __7

CONCENTRATION UNITS:
(ug/L or ug/Kg) UG/KG

CAS NUMBER	COMPOUND NAME	RT	EST. CONC.	Q
1.	Unknown	12.04	4.3	J
2.	Unknown alkylcyclohexane	12.90	400	JN
3.	Bicycloheptane, trimethyl-	13.05	40	JN
4.	Unknown hydrocarbon	13.23	4.3	JN
5.	Unknown C4-alkylbenzene	14.17	11	JN
6.	Bicycloheptanone, trimethyl-	16.01	74	JN
7.	Bicycloheptanone, trimethyl-	17.28	29	JN

1A

VOLATILE ORGANICS ANALYSIS DATA SHEET

EPA SAMPLE NO.

BW-4-1RE

Lab Name: PNELI Contract: Y-PAY-MOR

Lab Code: PNELI Case No.: 4121 SAS No.: SDG No.: BW-1-1

Matrix: (soil/water) SOIL Lab Sample ID: 4121-13RE

Sample wt/vol: 5.0 (g/mL) G Lab File ID: B8239

Level: (low/med) LOW Date Received: 06/11/92

% Moisture: not dec. 30 Date Analyzed: 06/15/92

Column: (pack/cap) CAP Dilution Factor: 1.0

CAS NO.	COMPOUND	CONCENTRATION UNITS: (ug/L or ug/Kg) UG/KG	Q
74-87-3	Chloromethane	14	U
74-83-9	Bromomethane	14	U
75-01-4	Vinyl Chloride	14	U
75-00-3	Chloroethane	14	U
75-09-2	Methylene Chloride	11	
67-64-1	Acetone	230	
75-15-0	Carbon Disulfide	7	U
75-35-4	1,1-Dichloroethene	7	U
75-34-3	1,1-Dichloroethane	7	U
156-60-5	trans-1,2-Dichloroethene	7	U
156-59-2	cis-1,2-Dichloroethene	56	
67-66-3	Chloroform	7	U
107-06-2	1,2-Dichloroethane	7	U
78-93-3	2-Butanone	32	
71-55-6	1,1,1-Trichloroethane	7	U
56-23-5	Carbon Tetrachloride	7	U
108-05-4	Vinyl Acetate	14	U
75-27-4	Bromodichloromethane	7	U
78-87-5	1,2-Dichloropropane	7	U
10061-01-5	cis-1,3-Dichloropropene	7	U
79-01-6	Trichloroethene	7	U
124-48-1	Dibromochloromethane	7	U
79-00-5	1,1,2-Trichloroethane	7	U
71-43-2	Benzene	7	U
10061-02-6	trans-1,3-Dichloropropene	7	U
75-25-2	Bromoform	7	U
108-10-1	4-Methyl-2-Pentanone	14	U
591-78-6	2-Hexanone	14	U
127-18-4	Tetrachloroethene	11	
79-34-5	1,1,2,2-Tetrachloroethane	7	U
108-88-3	Toluene	6	J
108-90-7	Chlorobenzene	7	U
100-41-4	Ethylbenzene	7	U
100-42-5	Styrene	7	U
1330-20-7	Xylene (total)	7	U

1E

VOLATILE ORGANICS ANALYSIS DATA SHEET
TENTATIVELY IDENTIFIED COMPOUNDS

EPA SAMPLE NO.

BW-4-1RE

Lab Name: PNELI_____ Contract: Y-PAY-MOR__

Lab Code: PNELI__ Case No.: 4121__ SAS No.: _____ SDG No.: BW-1-1

Matrix: (soil/water) SOIL__ Lab Sample ID: 4121-13RE____

Sample wt/vol: __5.0 (g/mL) G___ Lab File ID: B8239_____

Level: (low/med) LOW___ Date Received: 06/11/92

% Moisture: not dec. __30 Date Analyzed: 06/15/92

Column (pack/cap) CAP___ Dilution Factor: 1.0_____

Number TICs found: __5

CONCENTRATION UNITS:
(ug/L or ug/Kg) UG/KG

CAS NUMBER	COMPOUND NAME	RT	EST. CONC.	Q
1.	Unknown alkylcyclohexane	12.85	210	JN
2.	Bicycloheptane, trimethyl-	13.00	23	JN
3.	Unknown C4-alkylbenzene	14.12	10	JN
4.	Bicycloheptanone, trimethyl-	15.96	59	JN
5.	Bicycloheptanone, trimethyl-	17.24	21	JN

000032

1A
VOLATILE ORGANICS ANALYSIS DATA SHEET

EPA SAMPLE NO.

BW-4-2

Lab Name: PNELI Contract: Y-PAY-MOR

Lab Code: PNELI Case No.: 4121 SAS No.: SDG No.: BW-1-1

Matrix: (soil/water) SOIL Lab Sample ID: 4121-14

Sample wt/vol: 5.0 (g/mL) G Lab File ID: B8228

Level: (low/med) LOW Date Received: 06/11/92

% Moisture: not dec. 14 Date Analyzed: 06/12/92

Column: (pack/cap) CAP Dilution Factor: 1.0

CAS NO.	COMPOUND	CONCENTRATION UNITS: (ug/L or ug/Kg) UG/KG	Q
74-87-3	Chloromethane	12	U
74-83-9	Bromomethane	12	U
75-01-4	Vinyl Chloride	12	U
75-00-3	Chloroethane	12	U
75-09-2	Methylene Chloride	7	B
67-64-1	Acetone	19	
75-15-0	Carbon Disulfide	6	U
75-35-4	1,1-Dichloroethene	6	U
75-34-3	1,1-Dichloroethane	6	U
156-60-5	trans-1,2-Dichloroethene	6	U
156-59-2	cis-1,2-Dichloroethene	6	U
67-66-3	Chloroform	6	U
107-06-2	1,2-Dichloroethane	6	U
78-93-3	2-Butanone	12	U
71-55-6	1,1,1-Trichloroethane	6	U
56-23-5	Carbon Tetrachloride	6	U
108-05-4	Vinyl Acetate	12	U
75-27-4	Bromodichloromethane	6	U
78-87-5	1,2-Dichloropropane	6	U
10061-01-5	cis-1,3-Dichloropropene	6	U
79-01-6	Trichloroethene	6	U
124-48-1	Dibromochloromethane	6	U
79-00-5	1,1,2-Trichloroethane	6	U
71-43-2	Benzene	6	U
10061-02-6	trans-1,3-Dichloropropene	6	U
75-25-2	Bromoform	6	U
108-10-1	4-Methyl-2-Pentanone	12	U
591-78-6	2-Hexanone	12	U
127-18-4	Tetrachloroethene	6	U
79-34-5	1,1,2,2-Tetrachloroethane	6	U
108-88-3	Toluene	6	U
108-90-7	Chlorobenzene	6	U
100-41-4	Ethylbenzene	6	U
100-42-5	Styrene	6	U
1330-20-7	Xylene (total)	6	U

1E

VOLATILE ORGANICS ANALYSIS DATA SHEET
TENTATIVELY IDENTIFIED COMPOUNDS

EPA SAMPLE NO.

BW-4-2

Lab Name: PNELI_____ Contract: Y-PAY-MOR__

Lab Code: PNELI__ Case No.: 4121__ SAS No.: _____ SDG No.: BW-1-1

Matrix: (soil/water) SOIL__ Lab Sample ID: 4121-14_____

Sample wt/vol: __5.0 (g/mL) G___ Lab File ID: B8228_____

Level: (low/med) LOW___ Date Received: 06/11/92

% Moisture: not dec. __14 Date Analyzed: 06/12/92

Column (pack/cap) CAP___ Dilution Factor: 1.0_____

Number TICs found: __0

CONCENTRATION UNITS:
(ug/L or ug/Kg) UG/KG

CAS NUMBER	COMPOUND NAME	RT	EST. CONC.	. Q

000034

1A
VOLATILE ORGANICS ANALYSIS DATA SHEET

EPA SAMPLE NO.

BW-4-3

Lab Name: PNELI Contract: Y-PAY-MOR

Lab Code: PNELI Case No.: 4121 SAS No.: SDG No.: BW-1-1

Matrix: (soil/water) SOIL Lab Sample ID: 4121-15

Sample wt/vol: 5.0 (g/mL) G Lab File ID: B8229

Level: (low/med) LOW Date Received: 06/11/92

% Moisture: not dec. 12 Date Analyzed: 06/12/92

Column: (pack/cap) CAP Dilution Factor: 1.0

CAS NO.	COMPOUND	CONCENTRATION UNITS: (ug/L or ug/Kg) UG/KG	Q
74-87-3	Chloromethane	11	U
74-83-9	Bromomethane	11	U
75-01-4	Vinyl Chloride	11	U
75-00-3	Chloroethane	11	U
75-09-2	Methylene Chloride	19	B
67-64-1	Acetone	7	J
75-15-0	Carbon Disulfide	6	U
75-35-4	1,1-Dichloroethene	6	U
75-34-3	1,1-Dichloroethane	6	U
156-60-5	trans-1,2-Dichloroethene	6	U
156-59-2	cis-1,2-Dichloroethene	6	U
67-66-3	Chloroform	6	U
107-06-2	1,2-Dichloroethane	6	U
78-93-3	2-Butanone	11	U
71-55-6	1,1,1-Trichloroethane	6	U
56-23-5	Carbon Tetrachloride	6	U
108-05-4	Vinyl Acetate	11	U
75-27-4	Bromodichloromethane	6	U
78-87-5	1,2-Dichloropropane	6	U
10061-01-5	cis-1,3-Dichloropropene	6	U
79-01-6	Trichloroethene	6	U
124-48-1	Dibromochloromethane	6	U
79-00-5	1,1,2-Trichloroethane	6	U
71-43-2	Benzene	6	U
10061-02-6	trans-1,3-Dichloropropene	6	U
75-25-2	Bromoform	6	U
108-10-1	4-Methyl-2-Pentanone	11	U
591-78-6	2-Hexanone	11	U
127-18-4	Tetrachloroethene	6	U
79-34-5	1,1,2,2-Tetrachloroethane	6	U
108-88-3	Toluene	6	U
108-90-7	Chlorobenzene	6	U
100-41-4	Ethylbenzene	6	U
100-42-5	Styrene	6	U
1330-20-7	Xylene (total)	6	U

1E

VOLATILE ORGANICS ANALYSIS DATA SHEET
TENTATIVELY IDENTIFIED COMPOUNDS

EPA SAMPLE NO.

BW-4-3

Lab Name: PNELI_____ Contract: Y-PAY-MOR__

Lab Code: PNELI__ Case No.: 4121__ SAS No.: _____ SDG No.: BW-1-1

Matrix: (soil/water) SOIL___ Lab Sample ID: 4121-15_____

Sample wt/vol: __5.0 (g/mL) G___ Lab File ID: B8229_____

Level: (low/med) LOW___ Date Received: 06/11/92

% Moisture: not dec. __12 Date Analyzed: 06/12/92

Column (pack/cap) CAP___ Dilution Factor: 1.0_____

Number TICs found: __0

CONCENTRATION UNITS:
(ug/L or ug/Kg) UG/KG

CAS NUMBER	COMPOUND NAME	RT	EST. CONC.	Q

000036

1A

VOLATILE ORGANICS ANALYSIS DATA SHEET

EPA SAMPLE NO.

VBLKBD

Lab Name: PNELI_____ Contract: Y-PAY-MOR__

Lab Code: PNELI__ Case No.: 4121__ SAS No.: _____ SDG No.: BW-1-1

Matrix: (soil/water) SOIL__ Lab Sample ID: VBLKBD_____

Sample wt/vol: __5.0 (g/mL) G___ Lab File ID: B8205_____

Level: (low/med) LOW___ Date Received: _____

% Moisture: not dec. ____ Date Analyzed: 06/11/92

Column: (pack/cap) CAP___ Dilution Factor: 1.0_____

CAS NO.	COMPOUND	CONCENTRATION UNITS: (ug/L or ug/Kg) UG/KG	Q
74-87-3	Chloromethane	10	U
74-83-9	Bromomethane	10	U
75-01-4	Vinyl Chloride	10	U
75-00-3	Chloroethane	10	U
75-09-2	Methylene Chloride	1	J
67-64-1	Acetone	3	J
75-15-0	Carbon Disulfide	5	U
75-35-4	1,1-Dichloroethene	5	U
75-34-3	1,1-Dichloroethane	5	U
156-60-5	trans-1,2-Dichloroethene	5	U
156-59-2	cis-1,2-Dichloroethene	5	U
67-66-3	Chloroform	5	U
107-06-2	1,2-Dichloroethane	5	U
78-93-3	2-Butanone	10	U
71-55-6	1,1,1-Trichloroethane	5	U
56-23-5	Carbon Tetrachloride	5	U
108-05-4	Vinyl Acetate	10	U
75-27-4	Bromodichloromethane	5	U
78-87-5	1,2-Dichloropropane	5	U
10061-01-5	cis-1,3-Dichloropropene	5	U
79-01-6	Trichloroethene	5	U
124-48-1	Dibromochloromethane	5	U
79-00-5	1,1,2-Trichloroethane	5	U
71-43-2	Benzene	5	U
10061-02-6	trans-1,3-Dichloropropene	5	U
75-25-2	Bromoform	5	U
108-10-1	4-Methyl-2-Pentanone	10	U
591-78-6	2-Hexanone	10	U
127-18-4	Tetrachloroethene	5	U
79-34-5	1,1,2,2-Tetrachloroethane	5	U
108-88-3	Toluene	5	U
108-90-7	Chlorobenzene	5	U
100-41-4	Ethylbenzene	5	U
100-42-5	Styrene	5	U
1330-20-7	Xylene (total)	5	U

1E

VOLATILE ORGANICS ANALYSIS DATA SHEET
TENTATIVELY IDENTIFIED COMPOUNDS

EPA SAMPLE NO.

VBLKBD

Lab Name: PNELI_____ Contract: Y-PAY-MOR__

Lab Code: PNELI__ Case No.: 4121__ SAS No.: _____ SDG No.: BW-1-1

Matrix: (soil/water) SOIL__ Lab Sample ID: VBLKBD_____

Sample wt/vol: __5.0 (g/mL) G___ Lab File ID: B8205_____

Level: (low/med) LOW___ Date Received: _____

% Moisture: not dec. ____ Date Analyzed: 06/11/92

Column (pack/cap) CAP___ Dilution Factor: 1.0_____

Number TICs found: __0

CONCENTRATION UNITS:
(ug/L or ug/Kg) UG/KG

CAS NUMBER	COMPOUND NAME	RT	EST. CONC.	Q

1A

VOLATILE ORGANICS ANALYSIS DATA SHEET

EPA SAMPLE NO.

VBLKAW

Lab Name: PNELI Contract: Y-PAY-MOR

Lab Code: PNELI Case No.: 4121 SAS No.: _____ SDG No.: BW-1-1

Matrix: (soil/water) SOIL Lab Sample ID: VBLKAW

Sample wt/vol: 4.0 (g/mL) G Lab File ID: A1125

Level: (low/med) MED Date Received: _____

% Moisture: not dec. ____ Date Analyzed: 06/11/92

Column: (pack/cap) CAP Dilution Factor: 1.0

CAS NO.	COMPOUND	CONCENTRATION UNITS: (ug/L or ug/Kg) UG/KG	Q
74-87-3	Chloromethane	1200	U
74-83-9	Bromomethane	1200	U
75-01-4	Vinyl Chloride	1200	U
75-00-3	Chloroethane	1200	U
75-09-2	Methylene Chloride	350	J
67-64-1	Acetone	1100	J
75-15-0	Carbon Disulfide	620	U
75-35-4	1,1-Dichloroethene	620	U
75-34-3	1,1-Dichloroethane	620	U
156-60-5	trans-1,2-Dichloroethene	620	U
156-59-2	cis-1,2-Dichloroethene	620	U
67-66-3	Chloroform	620	U
107-06-2	1,2-Dichloroethane	620	U
78-93-3	2-Butanone	1200	U
71-55-6	1,1,1-Trichloroethane	620	U
56-23-5	Carbon Tetrachloride	620	U
108-05-4	Vinyl Acetate	1200	U
75-27-4	Bromodichloromethane	620	U
78-87-5	1,2-Dichloropropane	620	U
10061-01-5	cis-1,3-Dichloropropene	620	U
79-01-6	Trichloroethene	620	U
124-48-1	Dibromochloromethane	620	U
79-00-5	1,1,2-Trichloroethane	620	U
71-43-2	Benzene	620	U
10061-02-6	trans-1,3-Dichloropropene	620	U
75-25-2	Bromoform	620	U
108-10-1	4-Methyl-2-Pentanone	1200	U
591-78-6	2-Hexanone	420	J
127-18-4	Tetrachloroethene	620	U
79-34-5	1,1,2,2-Tetrachloroethane	620	U
108-88-3	Toluene	620	U
108-90-7	Chlorobenzene	620	U
100-41-4	Ethylbenzene	620	U
100-42-5	Styrene	620	U
1330-20-7	Xylene (total)	620	U

1E

VOLATILE ORGANICS ANALYSIS DATA SHEET
TENTATIVELY IDENTIFIED COMPOUNDS

EPA SAMPLE NO.

VBLKAW

Lab Name: PNELI_____ Contract: Y-PAY-MDR__

Lab Code: PNELI__ Case No.: 4121__ SAS No.: _____ SDG No.: BW-1-1

Matrix: (soil/water) SOIL__ Lab Sample ID: VBLKAW_____

Sample wt/vol: __4.0 (g/mL) G___ Lab File ID: A1125_____

Level: (low/med) MED___ Date Received: _____

% Moisture: not dec. ____ Date Analyzed: 06/11/92

Column (pack/cap) CAP___ Dilution Factor: 1.0_____

Number TICs found: __0

CONCENTRATION UNITS:
(ug/L or ug/Kg) UG/KG

CAS NUMBER	COMPOUND NAME	RT	EST. CONC.	Q

1A

VOLATILE ORGANICS ANALYSIS DATA SHEET

EPA SAMPLE NO.

VBLKAX

Lab Name: PNELI Contract: Y-PAY-MOR

Lab Code: PNELI Case No.: 4121 SAS No.: SDG No.: BW-1-1

Matrix: (soil/water) SOIL Lab Sample ID: VBLKAX

Sample wt/vol: 4.0 (g/mL) G Lab File ID: A1146

Level: (low/med) MED Date Received:

% Moisture: not dec. Date Analyzed: 06/12/92

Column: (pack/cap) CAP Dilution Factor: 1.0

CAS NO.	COMPOUND	CONCENTRATION UNITS: (ug/L or ug/Kg) UG/KG	Q
74-87-3	Chloromethane	1200	U
74-83-9	Bromomethane	1200	U
75-01-4	Vinyl Chloride	1200	U
75-00-3	Chloroethane	1200	U
75-09-2	Methylene Chloride	510	J
67-64-1	Acetone	710	J
75-15-0	Carbon Disulfide	620	U
75-35-4	1,1-Dichloroethene	620	U
75-34-3	1,1-Dichloroethane	620	U
156-60-5	trans-1,2-Dichloroethene	620	U
156-59-2	cis-1,2-Dichloroethene	620	U
67-66-3	Chloroform	620	U
107-06-2	1,2-Dichloroethane	620	U
78-93-3	2-Butanone	1200	U
71-55-6	1,1,1-Trichloroethane	620	U
56-23-5	Carbon Tetrachloride	620	U
108-05-4	Vinyl Acetate	1200	U
75-27-4	Bromodichloromethane	620	U
78-87-5	1,2-Dichloropropane	620	U
10061-01-5	cis-1,3-Dichloropropene	620	U
79-01-6	Trichloroethene	620	U
124-48-1	Dibromochloromethane	620	U
79-00-5	1,1,2-Trichloroethane	620	U
71-43-2	Benzene	620	U
10061-02-6	trans-1,3-Dichloropropene	620	U
75-25-2	Bromoform	620	U
108-10-1	4-Methyl-2-Pentanone	1200	U
591-78-6	2-Hexanone	1200	U
127-18-4	Tetrachloroethene	620	U
79-34-5	1,1,2,2-Tetrachloroethane	620	U
108-88-3	Toluene	620	U
108-90-7	Chlorobenzene	620	U
100-41-4	Ethylbenzene	620	U
100-42-5	Styrene	620	U
1330-20-7	Xylene (total)	620	U

1E

VOLATILE ORGANICS ANALYSIS DATA SHEET
TENTATIVELY IDENTIFIED COMPOUNDS

EPA SAMPLE NO.

VBLKAX

Lab Name: PNELI_____ Contract: _____

Lab Code: PNELI__ Case No.: BLANK_ SAS No.: _____ SDG No.: _____

Matrix: (soil/water) SOIL___ Lab Sample ID: VBLKAX_____

Sample wt/vol: __4.0 (g/mL) G___ Lab File ID: A1146_____

Level: (low/med) MED___ Date Received: _____

% Moisture: not dec. ____ Date Analyzed: 06/12/92

Column (pack/cap) CAP___ Dilution Factor: 1.0_____

Number TICs found: __0

CONCENTRATION UNITS:
(ug/L or ug/Kg) UG/KG

CAS NUMBER	COMPOUND NAME	RT	EST. CONC.	Q

1A

VOLATILE ORGANICS ANALYSIS DATA SHEET

EPA SAMPLE NO.

VBLKBD

Lab Name: PNELI Contract: Y-PAY-MOR

Lab Code: PNELI Case No.: 4121 SAS No.: SDG No.: BW-1-1

Matrix: (soil/water) SOIL Lab Sample ID: VBLKBD

Sample wt/vol: 5.0 (g/mL) G Lab File ID: B8222

Level: (low/med) LOW Date Received:

% Moisture: not dec. Date Analyzed: 06/12/92

Column: (pack/cap) CAP Dilution Factor: 1.0

CAS NO.	COMPOUND	CONCENTRATION UNITS: (ug/L or ug/Kg) UG/KG	Q
74-87-3	Chloromethane	10	U
74-83-9	Bromomethane	10	U
75-01-4	Vinyl Chloride	10	U
75-00-3	Chloroethane	10	U
75-09-2	Methylene Chloride	1	J
67-64-1	Acetone	10	U
75-15-0	Carbon Disulfide	5	U
75-35-4	1,1-Dichloroethene	5	U
75-34-3	1,1-Dichloroethane	5	U
156-60-5	trans-1,2-Dichloroethene	5	U
156-59-2	cis-1,2-Dichloroethene	5	U
67-66-3	Chloroform	5	U
107-06-2	1,2-Dichloroethane	5	U
78-93-3	2-Butanone	10	U
71-55-6	1,1,1-Trichloroethane	5	U
56-23-5	Carbon Tetrachloride	5	U
108-05-4	Vinyl Acetate	10	U
75-27-4	Bromodichloromethane	5	U
78-87-5	1,2-Dichloropropane	5	U
10061-01-5	cis-1,3-Dichloropropene	5	U
79-01-6	Trichloroethene	5	U
124-48-1	Dibromochloromethane	5	U
79-00-5	1,1,2-Trichloroethane	5	U
71-43-2	Benzene	5	U
10061-02-6	trans-1,3-Dichloropropene	5	U
75-25-2	Bromoform	5	U
108-10-1	4-Methyl-2-Pentanone	10	U
591-78-6	2-Hexanone	10	U
127-18-4	Tetrachloroethene	5	U
79-34-5	1,1,2,2-Tetrachloroethane	5	U
108-88-3	Toluene	5	U
108-90-7	Chlorobenzene	5	U
100-41-4	Ethylbenzene	5	U
100-42-5	Styrene	5	U
1330-20-7	Xylene (total)	5	U

1E

VOLATILE ORGANICS ANALYSIS DATA SHEET
TENTATIVELY IDENTIFIED COMPOUNDS

EPA SAMPLE NO.

VBLKBD

Lab Name: PNELI_____ Contract: Y-PAY-MOR__

Lab Code: PNELI__ Case No.: 4121__ SAS No.: _____ SDG No.: BW-1-1

Matrix: (soil/water) SOIL__ Lab Sample ID: VBLKBD_____

Sample wt/vol: __5.0 (g/mL) G___ Lab File ID: B8222_____

Level: (low/med) LOW___ Date Received: _____

% Moisture: not dec. ____ Date Analyzed: 06/12/92

Column (pack/cap) CAP___ Dilution Factor: 1.0_____

Number TICs found: __0

CONCENTRATION UNITS:
(ug/L or ug/Kg) UG/KG

CAS NUMBER	COMPOUND NAME	RT	EST. CONC.	Q

000044

1A

VOLATILE ORGANICS ANALYSIS DATA SHEET

EPA SAMPLE NO.

VBLKBF

Lab Name: PNELI Contract: Y-PAY-MOR

Lab Code: PNELI Case No.: 4121 SAS No.: _____ SDG No.: BW-1-1

Matrix: (soil/water) SOIL Lab Sample ID: VBLKBF

Sample wt/vol: 5.0 (g/mL) G Lab File ID: B8239

Level: (low/med) LOW Date Received: _____

% Moisture: not dec. ____ Date Analyzed: 06/15/92

Column: (pack/cap) CAP Dilution Factor: 1.0

CAS NO.	COMPOUND	CONCENTRATION UNITS: (ug/L or ug/Kg) UG/KG	Q
74-87-3	Chloromethane	10	U
74-83-9	Bromomethane	10	U
75-01-4	Vinyl Chloride	10	U
75-00-3	Chloroethane	10	U
75-09-2	Methylene Chloride	5	U
67-64-1	Acetone	10	U
75-15-0	Carbon Disulfide	5	U
75-35-4	1,1-Dichloroethene	5	U
75-34-3	1,1-Dichloroethane	5	U
156-60-5	trans-1,2-Dichloroethene	5	U
156-59-2	cis-1,2-Dichloroethene	5	U
67-66-3	Chloroform	5	U
107-06-2	1,2-Dichloroethane	5	U
78-93-3	2-Butanone	10	U
71-55-6	1,1,1-Trichloroethane	5	U
56-23-5	Carbon Tetrachloride	5	U
108-05-4	Vinyl Acetate	10	U
75-27-4	Bromodichloromethane	5	U
78-87-5	1,2-Dichloropropane	5	U
10061-01-5	cis-1,3-Dichloropropene	5	U
79-01-6	Trichloroethene	5	U
124-48-1	Dibromochloromethane	5	U
79-00-5	1,1,2-Trichloroethane	5	U
71-43-2	Benzene	5	U
10061-02-6	trans-1,3-Dichloropropene	5	U
75-25-2	Bromoform	5	U
108-10-1	4-Methyl-2-Pentanone	10	U
591-78-6	2-Hexanone	10	U
127-18-4	Tetrachloroethene	5	U
79-34-5	1,1,2,2-Tetrachloroethane	5	U
108-88-3	Toluene	5	U
108-90-7	Chlorobenzene	5	U
100-41-4	Ethylbenzene	5	U
100-42-5	Styrene	5	U
1330-20-7	Xylene (total)	5	U

1E

VOLATILE ORGANICS ANALYSIS DATA SHEET
TENTATIVELY IDENTIFIED COMPOUNDS

EPA SAMPLE NO.

VBLKBF

Lab Name: PNELI_____ Contract: Y-PAY-MOR__

Lab Code: PNELI__ Case No.: 4121__ SAS No.: _____ SDG No.: BW-1-1

Matrix: (soil/water) SOIL___ Lab Sample ID: VBLKBF_____

Sample wt/vol: __5.0 (g/mL) G___ Lab File ID: B8238_____

Level: (low/med) LOW___ Date Received: _____

% Moisture: not dec. ____ Date Analyzed: 06/15/92

Column (pack/cap) CAP___ Dilution Factor: 1.0_____

Number TICs found: __0

CONCENTRATION UNITS:
(ug/L or ug/Kg) UG/KG

CAS NUMBER	COMPOUND NAME	RT	EST. CONC.	Q

FORM I VOA-TIC 1/87 Rev.

000046

1A
VOLATILE ORGANICS ANALYSIS DATA SHEET

EPA SAMPLE NO.

VBLKAZ

Lab Name: PNELI Contract: Y-PAY-MOR

Lab Code: PNELI Case No.: 4121 SAS No.: _____ SDG No.: BW-1-1

Matrix: (soil/water) SOIL Lab Sample ID: VBLKAZ

Sample wt/vol: 4.0 (g/mL) G Lab File ID: A1179

Level: (low/med) MED Date Received: _____

% Moisture: not dec. ____ Date Analyzed: 06/17/92

Column: (pack/cap) CAP Dilution Factor: 1.0

CAS NO.	COMPOUND	CONCENTRATION UNITS: (ug/L or ug/Kg) UG/KG	Q
74-87-3	Chloromethane	1200	U
74-83-9	Bromomethane	1200	U
75-01-4	Vinyl Chloride	1200	U
75-00-3	Chloroethane	1200	U
75-09-2	Methylene Chloride	180	J
67-64-1	Acetone	200	J
75-15-0	Carbon Disulfide	620	U
75-35-4	1,1-Dichloroethene	620	U
75-34-3	1,1-Dichloroethane	620	U
156-60-5	trans-1,2-Dichloroethene	620	U
156-59-2	cis-1,2-Dichloroethene	620	U
67-66-3	Chloroform	620	U
107-06-2	1,2-Dichloroethane	620	U
78-93-3	2-Butanone	540	J
71-55-6	1,1,1-Trichloroethane	620	U
56-23-5	Carbon Tetrachloride	620	U
108-05-4	Vinyl Acetate	1200	U
75-27-4	Bromodichloromethane	620	U
78-87-5	1,2-Dichloropropane	620	U
10061-01-5	cis-1,3-Dichloropropene	620	U
79-01-6	Trichloroethene	620	U
124-48-1	Dibromochloromethane	620	U
79-00-5	1,1,2-Trichloroethane	620	U
71-43-2	Benzene	620	U
10061-02-6	trans-1,3-Dichloropropene	620	U
75-25-2	Bromoform	620	U
108-10-1	4-Methyl-2-Pentanone	1200	U
591-78-6	2-Hexanone	1200	U
127-18-4	Tetrachloroethene	620	U
79-34-5	1,1,2,2-Tetrachloroethane	620	U
108-88-3	Toluene	620	U
108-90-7	Chlorobenzene	620	U
100-41-4	Ethylbenzene	620	U
100-42-5	Styrene	620	U
1330-20-7	Xylene (total)	620	U

1E

VOLATILE ORGANICS ANALYSIS DATA SHEET
TENTATIVELY IDENTIFIED COMPOUNDS

EPA SAMPLE NO.

VBLKAZ

Lab Name: PNELI_____ Contract: Y-PAY-MOR__

Lab Code: PNELI__ Case No.: 4121__ SAS No.: _____ SDG No.: BW-1-1

Matrix: (soil/water) SOIL__ Lab Sample ID: VBLKAZ_____

Sample wt/vol: __4.0 (g/mL) G___ Lab File ID: A1179_____

Level: (low/med) MED___ Date Received: _____

% Moisture: not dec. ____ Date Analyzed: 06/17/92

Column (pack/cap) CAP___ Dilution Factor: 1.0_____

Number TICs found: __0

CONCENTRATION UNITS:
(ug/L or ug/Kg) UG/KG

CAS NUMBER	COMPOUND NAME	RT	EST. CONC.	Q

FORM I VOA-TIC 1/87 Rev.

000048

1A
VOLATILE ORGANICS ANALYSIS DATA SHEET

EPA SAMPLE NO.

B10-S1

Lab Name: PNELI Contract: Y-PAY-MOR

Lab Code: PNELI Case No.: 4329 SAS No.: SDG No.: B5-S4

Matrix: (soil/water) SOIL Lab Sample ID: 4329-22

Sample wt/vol: 5.0 (g/mL) G Lab File ID: B8854

Level: (low/med) LOW Date Received: 08/31/92

% Moisture: not dec. 9 Date Analyzed: 09/09/92

Column: (pack/cap) CAP Dilution Factor: 1.0

CAS NO.	COMPOUND	CONCENTRATION UNITS: (ug/L or ug/Kg) UG/KG	Q
74-87-3	Chloromethane	11	U
74-83-9	Bromomethane	11	U
75-01-4	Vinyl Chloride	11	U
75-00-3	Chloroethane	11	U
75-09-2	Methylene Chloride	1	BJ
67-64-1	Acetone	4200	BE
75-15-0	Carbon Disulfide	5	U
75-35-4	1,1-Dichloroethene	5	U
75-34-3	1,1-Dichloroethane	5	U
156-60-5	trans-1,2-Dichloroethene	5	U
156-59-2	cis-1,2-Dichloroethene	5	U
67-66-3	Chloroform	5	U
107-06-2	1,2-Dichloroethane	5	U
78-93-3	2-Butanone	11	U
71-55-6	1,1,1-Trichloroethane	5	U
56-23-5	Carbon Tetrachloride	5	U
108-05-4	Vinyl Acetate	11	U
75-27-4	Bromodichloromethane	5	U
78-87-5	1,2-Dichloropropane	5	U
10061-01-5	cis-1,3-Dichloropropene	5	U
79-01-6	Trichloroethene	5	U
124-48-1	Dibromochloromethane	5	U
79-00-5	1,1,2-Trichloroethane	5	U
71-43-2	Benzene	5	U
10061-02-6	trans-1,3-Dichloropropene	5	U
75-25-2	Bromoform	5	U
108-10-1	4-Methyl-2-Pentanone	11	U
591-78-6	2-Hexanone	11	U
127-18-4	Tetrachloroethene	5	U
79-34-5	1,1,2,2-Tetrachloroethane	5	U
108-88-3	Toluene	5	U
108-90-7	Chlorobenzene	5	U
100-41-4	Ethylbenzene	5	U
100-42-5	Styrene	5	U
1330-20-7	Xylene (total)	5	U

1E

VOLATILE ORGANICS ANALYSIS DATA SHEET
TENTATIVELY IDENTIFIED COMPOUNDS

EPA SAMPLE NO.

B10-S1

Lab Name: PNELI_____ Contract: Y-PAY-MOR__

Lab Code: PNELI__ Case No.: 4329__ SAS No.: _____ SDG No.: B5-S4_

Matrix: (soil/water) SOIL__ Lab Sample ID: 4329-22_____

Sample wt/vol: __5.0 (g/mL) G___ Lab File ID: B8854_____

Level: (low/med) LOW___ Date Received: 08/31/92

% Moisture: not dec. ___9 Date Analyzed: 09/09/92

Column (pack/cap) CAP___ Dilution Factor: 1.0_____

Number TICs found: __1

CONCENTRATION UNITS:
(ug/L or ug/Kg) UG/KG

CAS NUMBER	COMPOUND NAME	RT	EST. CONC.	Q
1. 67630	2-Propanol	4.07	7000	JN

1A
VOLATILE ORGANICS ANALYSIS DATA SHEET

EPA SAMPLE NO.

B10-S1DL

Lab Name: PNELI Contract: Y-PAY-MOR

Lab Code: PNELI Case No.: 4329 SAS No.: SDG No.: B5-S4

Matrix: (soil/water) SOIL Lab Sample ID: 4329-22DL

Sample wt/vol: 4.0 (g/mL) G Lab File ID: A1940

Level: (low/med) MED Date Received: 08/31/92

% Moisture: not dec. 9 Date Analyzed: 09/03/92

Column: (pack/cap) CAP Dilution Factor: 1.0

CAS NO.	COMPOUND	CONCENTRATION UNITS: (ug/L or ug/Kg) UG/KG	Q
74-87-3	Chloromethane	1400	U
74-83-9	Bromomethane	1400	U
75-01-4	Vinyl Chloride	1400	U
75-00-3	Chloroethane	1400	U
75-09-2	Methylene Chloride	1200	BD
67-64-1	Acetone	4400	BD
75-15-0	Carbon Disulfide	690	U
75-35-4	1,1-Dichloroethene	690	U
75-34-3	1,1-Dichloroethane	690	U
156-60-5	trans-1,2-Dichloroethene	690	U
156-59-2	cis-1,2-Dichloroethene	690	U
67-66-3	Chloroform	690	U
107-06-2	1,2-Dichloroethane	690	U
78-93-3	2-Butanone	1100	BDJ
71-55-6	1,1,1-Trichloroethane	690	U
56-23-5	Carbon Tetrachloride	690	U
108-05-4	Vinyl Acetate	1400	U
75-27-4	Bromodichloromethane	690	U
78-87-5	1,2-Dichloropropane	690	U
10061-01-5	cis-1,3-Dichloropropene	690	U
79-01-6	Trichloroethene	690	U
124-48-1	Dibromochloromethane	690	U
79-00-5	1,1,2-Trichloroethane	690	U
71-43-2	Benzene	690	U
10061-02-6	trans-1,3-Dichloropropene	690	U
75-25-2	Bromoform	690	U
108-10-1	4-Methyl-2-Pentanone	1400	U
591-78-6	2-Hexanone	1400	U
127-18-4	Tetrachloroethene	690	U
79-34-5	1,1,2,2-Tetrachloroethane	690	U
108-88-3	Toluene	690	U
108-90-7	Chlorobenzene	690	U
100-41-4	Ethylbenzene	690	U
100-42-5	Styrene	690	U
1330-20-7	Xylene (total)	690	U

1E

VOLATILE ORGANICS ANALYSIS DATA SHEET
TENTATIVELY IDENTIFIED COMPOUNDS

EPA SAMPLE NO.

B10-S1DL

Lab Name: PNELI_____ Contract: Y-PAY-MOR__

Lab Code: PNELI__ Case No.: 4329__ SAS No.: _____ SDG No.: B5-S4_

Matrix: (soil/water) SOIL__ Lab Sample ID: 4329-22DL____

Sample wt/vol: __4.0 (g/mL) G___ Lab File ID: A1940_____

Level: (low/med) MED___ Date Received: 08/31/92

% Moisture: not dec. ___9 Date Analyzed: 09/03/92

Column (pack/cap) CAP___ Dilution Factor: 1.0_____

Number TICs found: __1

CONCENTRATION UNITS:
(ug/L or ug/Kg) UG/KG

CAS NUMBER	COMPOUND NAME	RT	EST. CONC.	Q
1. 735428	2-Propanol (ACN) (9CI)	1.89	11000	JN

1A
VOLATILE ORGANICS ANALYSIS DATA SHEET

EPA SAMPLE NO.

B10-S2

Lab Name: PNELI Contract: Y-PAY-MOR

Lab Code: PNELI Case No.: 4329 SAS No.: SDG No.: B5-S4

Matrix: (soil/water) SOIL Lab Sample ID: 4329-11

Sample wt/vol: 5.0 (g/mL) G Lab File ID: B8853

Level: (low/med) LOW Date Received: 08/31/92

% Moisture: not dec. 8 Date Analyzed: 09/09/92

Column: (pack/cap) CAP Dilution Factor: 1.0

CAS NO.	COMPOUND	CONCENTRATION UNITS: (ug/L or ug/Kg) UG/KG	Q
74-87-3	Chloromethane	11	U
74-83-9	Bromomethane	11	U
75-01-4	Vinyl Chloride	11	U
75-00-3	Chloroethane	11	U
75-09-2	Methylene Chloride	3	BJ
67-64-1	Acetone	3800	BE
75-15-0	Carbon Disulfide	5	U
75-35-4	1,1-Dichloroethene	5	U
75-34-3	1,1-Dichloroethane	5	U
156-60-5	trans-1,2-Dichloroethene	5	U
156-59-2	cis-1,2-Dichloroethene	3	J
67-66-3	Chloroform	5	U
107-06-2	1,2-Dichloroethane	5	U
78-93-3	2-Butanone	6	J
71-55-6	1,1,1-Trichloroethane	5	U
56-23-5	Carbon Tetrachloride	5	U
108-05-4	Vinyl Acetate	11	U
75-27-4	Bromodichloromethane	5	U
78-87-5	1,2-Dichloropropane	5	U
10061-01-5	cis-1,3-Dichloropropene	5	U
79-01-6	Trichloroethene	5	U
124-48-1	Dibromochloromethane	5	U
79-00-5	1,1,2-Trichloroethane	5	U
71-43-2	Benzene	5	U
10061-02-6	trans-1,3-Dichloropropene	5	U
75-25-2	Bromoform	5	U
108-10-1	4-Methyl-2-Pentanone	11	U
591-78-6	2-Hexanone	11	U
127-18-4	Tetrachloroethene	5	U
79-34-5	1,1,2,2-Tetrachloroethane	5	U
108-88-3	Toluene	5	U
108-90-7	Chlorobenzene	5	U
100-41-4	Ethylbenzene	5	U
100-42-5	Styrene	5	U
1330-20-7	Xylene (total)	5	U

1E

VOLATILE ORGANICS ANALYSIS DATA SHEET
TENTATIVELY IDENTIFIED COMPOUNDS

EPA SAMPLE NO.

B10-S2

Lab Name: PNELI_____ Contract: Y-PAY-MOR__

Lab Code: PNELI__ Case No.: 4329__ SAS No.: _____ SDG No.: B5-S4_

Matrix: (soil/water) SOIL__ Lab Sample ID: 4329-11_____

Sample wt/vol: __5.0 (g/mL) G___ Lab File ID: B8853_____

Level: (low/med) LOW___ Date Received: 08/31/92

% Moisture: not dec. ___8 Date Analyzed: 09/09/92

Column (pack/cap) CAP___ Dilution Factor: 1.0_____

Number TICs found: __1

CONCENTRATION UNITS:
(ug/L or ug/Kg) UG/KG

CAS NUMBER	COMPOUND NAME	RT	EST. CONC.	Q
1. 67630	2-Propanol	3.55	4100	JN

1A
VOLATILE ORGANICS ANALYSIS DATA SHEET

EPA SAMPLE NO.

B10-S2MS

Lab Name: PNELI Contract: Y-PAY-MOR

Lab Code: PNELI Case No.: 4329 SAS No.: SDG No.: B5-S4

Matrix: (soil/water) SOIL Lab Sample ID: 4329-11MS

Sample wt/vol: 4.0 (g/mL) G Lab File ID: A1942

Level: (low/med) MED Date Received: 08/31/92

% Moisture: not dec. 8 Date Analyzed: 09/03/92

Column: (pack/cap) CAP Dilution Factor: 1.0

CAS NO.	COMPOUND	CONCENTRATION UNITS: (ug/L or ug/Kg) UG/KG	Q
74-87-3	Chloromethane	1400	U
74-83-9	Bromomethane	1400	U
75-01-4	Vinyl Chloride	1400	U
75-00-3	Chloroethane	1400	U
75-09-2	Methylene Chloride	310	BJ
67-64-1	Acetone	11000	B
75-15-0	Carbon Disulfide	680	U
75-35-4	1,1-Dichloroethene	680	U
75-34-3	1,1-Dichloroethane	680	U
156-60-5	trans-1,2-Dichloroethene	680	U
156-59-2	cis-1,2-Dichloroethene	270	J
67-66-3	Chloroform	680	U
107-06-2	1,2-Dichloroethane	680	U
78-93-3	2-Butanone	1200	BJ
71-55-6	1,1,1-Trichloroethane	680	U
56-23-5	Carbon Tetrachloride	680	U
108-05-4	Vinyl Acetate	1400	U
75-27-4	Bromodichloromethane	680	U
78-87-5	1,2-Dichloropropane	680	U
10061-01-5	cis-1,3-Dichloropropene	680	U
79-01-6	Trichloroethene	680	U
124-48-1	Dibromochloromethane	680	U
79-00-5	1,1,2-Trichloroethane	680	U
71-43-2	Benzene	680	U
10061-02-6	trans-1,3-Dichloropropene	680	U
75-25-2	Bromoform	680	U
108-10-1	4-Methyl-2-Pentanone	1400	U
591-78-6	2-Hexanone	1400	U
127-18-4	Tetrachloroethene	680	U
79-34-5	1,1,2,2-Tetrachloroethane	680	U
108-88-3	Toluene	680	U
108-90-7	Chlorobenzene	680	U
100-41-4	Ethylbenzene	680	U
100-42-5	Styrene	680	U
1330-20-7	Xylene (total)	680	U

1A
VOLATILE ORGANICS ANALYSIS DATA SHEET

EPA SAMPLE NO.

B10-S2MSD

Lab Name: PNELI Contract: Y-PAY-MOR

Lab Code: PNELI Case No.: 4329 SAS No.: SDG No.: B5-S4

Matrix: (soil/water) SOIL Lab Sample ID: 4329-11MSD

Sample wt/vol: 4.0 (g/mL) G Lab File ID: A1943

Level: (low/med) MED Date Received: 08/31/92

% Moisture: not dec. 8 Date Analyzed: 09/03/92

Column: (pack/cap) CAP Dilution Factor: 1.0

CAS NO.	COMPOUND	CONCENTRATION UNITS: (ug/L or ug/Kg) UG/KG	Q
74-87-3	Chloromethane	1400	U
74-83-9	Bromomethane	1400	U
75-01-4	Vinyl Chloride	1400	U
75-00-3	Chloroethane	1400	U
75-09-2	Methylene Chloride	390	BJ
67-64-1	Acetone	12000	B
75-15-0	Carbon Disulfide	680	U
75-35-4	1,1-Dichloroethene	680	U
75-34-3	1,1-Dichloroethane	680	U
156-60-5	trans-1,2-Dichloroethene	680	U
156-59-2	cis-1,2-Dichloroethene	290	J
67-66-3	Chloroform	680	U
107-06-2	1,2-Dichloroethane	680	U
78-93-3	2-Butanone	1600	B
71-55-6	1,1,1-Trichloroethane	680	U
56-23-5	Carbon Tetrachloride	680	U
108-05-4	Vinyl Acetate	1400	U
75-27-4	Bromodichloromethane	680	U
78-87-5	1,2-Dichloropropane	680	U
10061-01-5	cis-1,3-Dichloropropene	680	U
79-01-6	Trichloroethene	680	U
124-48-1	Dibromochloromethane	680	U
79-00-5	1,1,2-Trichloroethane	680	U
71-43-2	Benzene	680	U
10061-02-6	trans-1,3-Dichloropropene	680	U
75-25-2	Bromoform	680	U
108-10-1	4-Methyl-2-Pentanone	1400	U
591-78-6	2-Hexanone	1400	U
127-18-4	Tetrachloroethene	680	U
79-34-5	1,1,2,2-Tetrachloroethane	680	U
108-88-3	Toluene	680	U
108-90-7	Chlorobenzene	680	U
100-41-4	Ethylbenzene	680	U
100-42-5	Styrene	680	U
1330-20-7	Xylene (total)	680	U

1A
VOLATILE ORGANICS ANALYSIS DATA SHEET

EPA SAMPLE NO.

B10-S2DL

Lab Name: PNELI Contract: Y-PAY-MOR

Lab Code: PNELI Case No.: 4329 SAS No.: SDG No.: B5-S4

Matrix: (soil/water) SOIL Lab Sample ID: 4329-11DL

Sample wt/vol: 4.0 (g/mL) G Lab File ID: A1941

Level: (low/med) MED Date Received: 08/31/92

% Moisture: not dec. 8 Date Analyzed: 09/03/92

Column: (pack/cap) CAP Dilution Factor: 1.0

CAS NO.	COMPOUND	CONCENTRATION UNITS: (ug/L or ug/Kg) UG/KG	Q
74-87-3	Chloromethane	1400	U
74-83-9	Bromomethane	1400	U
75-01-4	Vinyl Chloride	1400	U
75-00-3	Chloroethane	1400	U
75-09-2	Methylene Chloride	470	BDJ
67-64-1	Acetone	12000	BD
75-15-0	Carbon Disulfide	680	U
75-35-4	1,1-Dichloroethene	680	U
75-34-3	1,1-Dichloroethane	680	U
156-60-5	trans-1,2-Dichloroethene	680	U
156-59-2	cis-1,2-Dichloroethene	340	DJ
67-66-3	Chloroform	680	U
107-06-2	1,2-Dichloroethane	680	U
78-93-3	2-Butanone	1700	BD
71-55-6	1,1,1-Trichloroetnane	680	U
56-23-5	Carbon Tetrachloride	680	U
108-05-4	Vinyl Acetate	1400	U
75-27-4	Bromodichloromethane	680	U
78-87-5	1,2-Dichloropropane	680	U
10061-01-5	cis-1,3-Dichloropropene	680	U
79-01-6	Trichloroethene	680	U
124-48-1	Dibromochloromethane	680	U
79-00-5	1,1,2-Trichloroethane	680	U
71-43-2	Benzene	680	U
10061-02-6	trans-1,3-Dichloropropene	680	U
75-25-2	Bromoform	680	U
108-10-1	4-Methyl-2-Pentanone	1400	U
591-78-6	2-Hexanone	1400	U
127-18-4	Tetrachloroethene	680	U
79-34-5	1,1,2,2-Tetrachloroethane	680	U
108-88-3	Toluene	680	U
108-90-7	Chlorobenzene	680	U
100-41-4	Ethylbenzene	680	U
100-42-5	Styrene	680	U
1330-20-7	Xylene (total)	680	U

1E

VOLATILE ORGANICS ANALYSIS DATA SHEET
TENTATIVELY IDENTIFIED COMPOUNDS

EPA SAMPLE NO.

B10-S2DL

Lab Name: PNELI_____ Contract: Y-PAY-MOR__

Lab Code: PNELI__ Case No.: 4329__ SAS No.: _____ SDG No.: B5-S4_

Matrix: (soil/water) SOIL__ Lab Sample ID: 4329-11DL____

Sample wt/vol: __4.0 (g/mL) G___ Lab File ID: A1941_____

Level: (low/med) MED___ Date Received: 08/31/92

% Moisture: not dec. ___8 Date Analyzed: 09/03/92

Column (pack/cap) CAP___ Dilution Factor: 1.0_____

Number TICs found: __1

CONCENTRATION UNITS:
(ug/L or ug/Kg) UG/KG

CAS NUMBER	COMPOUND NAME	RT	EST. CONC.	Q
1. 1001050	ISOPROPANOL	1.89	16000	JN

1A
VOLATILE ORGANICS ANALYSIS DATA SHEET

EPA SAMPLE NO.

B10-S3

Lab Name: PNELI Contract: Y-PAY-MOR

Lab Code: PNELI Case No.: 4329 SAS No.: SDG No.: B5-S4

Matrix: (soil/water) SOIL Lab Sample ID: 4329-12

Sample wt/vol: 5.0 (g/mL) G Lab File ID: B8825

Level: (low/med) LOW Date Received: 08/31/92

% Moisture: not dec. 9 Date Analyzed: 09/03/92

Column: (pack/cap) CAP Dilution Factor: 1.0

CAS NO.	COMPOUND	CONCENTRATION UNITS: (ug/L or ug/Kg) UG/KG	Q
74-87-3	Chloromethane	11	U
74-83-9	Bromomethane	11	U
75-01-4	Vinyl Chloride	11	U
75-00-3	Chloroethane	11	U
75-09-2	Methylene Chloride	8	
67-64-1	Acetone	150	
75-15-0	Carbon Disulfide	5	U
75-35-4	1,1-Dichloroethene	5	U
75-34-3	1,1-Dichloroethane	5	U
156-60-5	trans-1,2-Dichloroethene	5	U
156-59-2	cis-1,2-Dichloroethene	5	U
67-66-3	Chloroform	5	U
107-06-2	1,2-Dichloroethane	5	U
78-93-3	2-Butanone	3	J
71-55-6	1,1,1-Trichloroethane	5	U
56-23-5	Carbon Tetrachloride	5	U
108-05-4	Vinyl Acetate	11	U
75-27-4	Bromodichloromethane	5	U
78-87-5	1,2-Dichloropropane	5	U
10061-01-5	cis-1,3-Dichloropropene	5	U
79-01-6	Trichloroethene	5	U
124-48-1	Dibromochloromethane	5	U
79-00-5	1,1,2-Trichloroethane	5	U
71-43-2	Benzene	5	U
10061-02-6	trans-1,3-Dichloropropene	5	U
75-25-2	Bromoform	5	U
108-10-1	4-Methyl-2-Pentanone	11	U
591-78-6	2-Hexanone	11	U
127-18-4	Tetrachloroethene	5	U
79-34-5	1,1,2,2-Tetrachloroethane	5	U
108-88-3	Toluene	5	U
108-90-7	Chlorobenzene	5	U
100-41-4	Ethylbenzene	5	U
100-42-5	Styrene	5	U
1330-20-7	Xylene (total)	5	U

1E

VOLATILE ORGANICS ANALYSIS DATA SHEET
TENTATIVELY IDENTIFIED COMPOUNDS

EPA SAMPLE NO.

B10-S3

Lab Name: PNELI_____ Contract: Y-PAY-MOR__

Lab Code: PNELI__ Case No.: 4329__ SAS No.: _____ SDG No.: B5-S4_

Matrix: (soil/water) SOIL__ Lab Sample ID: 4329-12_____

Sample wt/vol: __5.0 (g/mL) G___ Lab File ID: B8825_____

Level: (low/med) LOW___ Date Received: 08/31/92

% Moisture: not dec. ___9 Date Analyzed: 09/03/92

Column (pack/cap) CAP___ Dilution Factor: 1.0_____

Number TICs found: __1

CONCENTRATION UNITS:
(ug/L or ug/Kg) UG/KG

CAS NUMBER	COMPOUND NAME	RT	EST. CONC.	Q
1. 67630	isopropanol	3.43	6.6	JN

1A
VOLATILE ORGANICS ANALYSIS DATA SHEET

EPA SAMPLE NO.

B5-S4

Lab Name: PNELI Contract: Y-PAY-MOR

Lab Code: PNELI Case No.: 4329 SAS No.: SDG No.: B5-S4

Matrix: (soil/water) SOIL Lab Sample ID: 4329-02

Sample wt/vol: 5.0 (g/mL) G Lab File ID: B8810

Level: (low/med) LOW Date Received: 08/31/92

% Moisture: not dec. 16 Date Analyzed: 09/02/92

Column: (pack/cap) CAP Dilution Factor: 1.0

CAS NO.	COMPOUND	CONCENTRATION UNITS: (ug/L or ug/Kg) UG/KG	Q
74-87-3	Chloromethane	12	U
74-83-9	Bromomethane	12	U
75-01-4	Vinyl Chloride	12	U
75-00-3	Chloroethane	12	U
75-09-2	Methylene Chloride	26	
67-64-1	Acetone	18	
75-15-0	Carbon Disulfide	6	U
75-35-4	1,1-Dichloroethene	6	U
75-34-3	1,1-Dichloroethane	6	U
156-60-5	trans-1,2-Dichloroethene	6	U
156-59-2	cis-1,2-Dichloroethene	6	U
67-66-3	Chloroform	6	U
107-06-2	1,2-Dichloroethane	6	U
78-93-3	2-Butanone	12	U
71-55-6	1,1,1-Trichloroethane	6	U
56-23-5	Carbon Tetrachloride	6	U
108-05-4	Vinyl Acetate	12	U
75-27-4	Bromodichloromethane	6	U
78-87-5	1,2-Dichloropropane	6	U
10061-01-5	cis-1,3-Dichloropropene	6	U
79-01-6	Trichloroethene	6	U
124-48-1	Dibromochloromethane	6	U
79-00-5	1,1,2-Trichloroethane	6	U
71-43-2	Benzene	6	U
10061-02-6	trans-1,3-Dichloropropene	6	U
75-25-2	Bromoform	6	U
108-10-1	4-Methyl-2-Pentanone	12	U
591-78-6	2-Hexanone	12	U
127-18-4	Tetrachloroethene	6	U
79-34-5	1,1,2,2-Tetrachloroethane	6	U
108-88-3	Toluene	6	U
108-90-7	Chlorobenzene	6	U
100-41-4	Ethylbenzene	6	U
100-42-5	Styrene	6	U
1330-20-7	Xylene (total)	6	U

1E

VOLATILE ORGANICS ANALYSIS DATA SHEET
TENTATIVELY IDENTIFIED COMPOUNDS

EPA SAMPLE NO.

B5-S4

Lab Name: PNELI_____ Contract: Y-PAY-MOR__

Lab Code: PNELI__ Case No.: 4329__ SAS No.: _____ SDG No.: B5-S4_

Matrix: (soil/water) SOIL__ Lab Sample ID: 4329-02_____

Sample wt/vol: __5.0 (g/mL) G___ Lab File ID: B8810_____

Level: (low/med) LOW___ Date Received: 08/31/92

% Moisture: not dec. __16 Date Analyzed: 09/02/92

Column (pack/cap) CAP___ Dilution Factor: 1.0_____

Number TICs found: __0

CONCENTRATION UNITS:
(ug/L or ug/Kg) UG/KG

CAS NUMBER	COMPOUND NAME	RT	EST. CONC.	Q

1A
VOLATILE ORGANICS ANALYSIS DATA SHEET

EPA SAMPLE NO.

B5-S8

Lab Name: PNELI Contract: Y-PAY-MOR

Lab Code: PNELI Case No.: 4329 SAS No.: SDG No.: B5-S4

Matrix: (soil/water) SOIL Lab Sample ID: 4329-01

Sample wt/vol: 5.0 (g/mL) G Lab File ID: B8841

Level: (low/med) LOW Date Received: 08/31/92

% Moisture: not dec. 13 Date Analyzed: 09/04/92

Column: (pack/cap) CAP Dilution Factor: 1.0

CAS NO.	COMPOUND	CONCENTRATION UNITS: (ug/L or ug/Kg) UG/KG	Q
74-87-3	Chloromethane	11	U
74-83-9	Bromomethane	11	U
75-01-4	Vinyl Chloride	11	U
75-00-3	Chloroethane	11	U
75-09-2	Methylene Chloride	16	B
67-64-1	Acetone	13	B
75-15-0	Carbon Disulfide	6	U
75-35-4	1,1-Dichloroethene	6	U
75-34-3	1,1-Dichloroethane	6	U
156-60-5	trans-1,2-Dichloroethene	6	U
156-59-2	cis-1,2-Dichloroethene	6	U
67-66-3	Chloroform	6	U
107-06-2	1,2-Dichloroethane	6	U
78-93-3	2-Butanone	11	U
71-55-6	1,1,1-Trichloroethane	6	U
56-23-5	Carbon Tetrachloride	6	U
108-05-4	Vinyl Acetate	11	U
75-27-4	Bromodichloromethane	6	U
78-87-5	1,2-Dichloropropane	6	U
10061-01-5	cis-1,3-Dichloropropene	6	U
79-01-6	Trichloroethene	6	U
124-48-1	Dibromochloromethane	6	U
79-00-5	1,1,2-Trichloroethane	6	U
71-43-2	Benzene	6	U
10061-02-6	trans-1,3-Dichloropropene	6	U
75-25-2	Bromoform	6	U
108-10-1	4-Methyl-2-Pentanone	11	U
591-78-6	2-Hexanone	11	U
127-18-4	Tetrachloroethene	6	U
79-34-5	1,1,2,2-Tetrachloroethane	6	U
108-88-3	Toluene	6	U
108-90-7	Chlorobenzene	6	U
100-41-4	Ethylbenzene	6	U
100-42-5	Styrene	6	U
1330-20-7	Xylene (total)	6	U

1E

VOLATILE ORGANICS ANALYSIS DATA SHEET
TENTATIVELY IDENTIFIED COMPOUNDS

EPA SAMPLE NO.

B5-S8

Lab Name: PNELI_____ Contract: Y-PAY-MOR__

Lab Code: PNELI__ Case No.: 4329__ SAS No.: _____ SDG No.: B5-S4_

Matrix: (soil/water) SOIL__ Lab Sample ID: 4329-01_____

Sample wt/vol: __5.0 (g/mL) G___ Lab File ID: B8841_____

Level: (low/med) LOW___ Date Received: 08/31/92

% Moisture: not dec. __13 Date Analyzed: 09/04/92

Column (pack/cap) CAP___ Dilution Factor: 1.0_____

Number TICs found: __0

CONCENTRATION UNITS:
(ug/L or ug/Kg) UG/KG

CAS NUMBER	COMPOUND NAME	RT	EST. CONC.	Q

1A
VOLATILE ORGANICS ANALYSIS DATA SHEET

EPA SAMPLE NO.

B5-S8MS

Lab Name: PNELI Contract: Y-PAY-MOR

Lab Code: PNELI Case No.: 4329 SAS No.: SDG No.: B5-S4

Matrix: (soil/water) SOIL Lab Sample ID: 4329-01MS

Sample wt/vol: 5.0 (g/mL) G Lab File ID: B8831

Level: (low/med) LOW Date Received: 08/31/92

% Moisture: not dec. 13 Date Analyzed: 09/03/92

Column: (pack/cap) CAP Dilution Factor: 1.0

CAS NO.	COMPOUND	CONCENTRATION UNITS: (ug/L or ug/Kg) UG/KG	Q
74-87-3	Chloromethane	11	U
74-83-9	Bromomethane	11	U
75-01-4	Vinyl Chloride	11	U
75-00-3	Chloroethane	11	U
75-09-2	Methylene Chloride	8	
67-64-1	Acetone	14	
75-15-0	Carbon Disulfide	6	U
75-35-4	1,1-Dichloroethene	6	U
75-34-3	1,1-Dichloroethane	6	U
156-60-5	trans-1,2-Dichloroethene	6	U
156-59-2	cis-1,2-Dichloroethene	6	U
67-66-3	Chloroform	6	U
107-06-2	1,2-Dichloroethane	6	U
78-93-3	2-Butanone	3	J
71-55-6	1,1,1-Trichloroethane	6	U
56-23-5	Carbon Tetrachloride	6	U
108-05-4	Vinyl Acetate	11	U
75-27-4	Bromodichloromethane	6	U
78-87-5	1,2-Dichloropropane	6	U
10061-01-5	cis-1,3-Dichloropropene	6	U
79-01-6	Trichloroethene	6	U
124-48-1	Dibromochloromethane	6	U
79-00-5	1,1,2-Trichloroethane	6	U
71-43-2	Benzene	6	U
10061-02-6	trans-1,3-Dichloropropene	6	U
75-25-2	Bromoform	6	U
108-10-1	4-Methyl-2-Pentanone	11	U
591-78-6	2-Hexanone	11	U
127-18-4	Tetrachloroethene	6	U
79-34-5	1,1,2,2-Tetrachloroethane	6	U
108-88-3	Toluene	6	U
108-90-7	Chlorobenzene	6	U
100-41-4	Ethylbenzene	6	U
100-42-5	Styrene	6	U
1330-20-7	Xylene (total)	6	U

1A
VOLATILE ORGANICS ANALYSIS DATA SHEET

EPA SAMPLE NO.

B5-S8MSD

Lab Name: PNELI Contract: Y-PAY-MOR

Lab Code: PNELI Case No.: 4329 SAS No.: SDG No.: B5-S4

Matrix: (soil/water) SOIL Lab Sample ID: 4329-01MSD

Sample wt/vol: 5.0 (g/mL) G Lab File ID: B8833

Level: (low/med) LOW Date Received: 08/31/92

% Moisture: not dec. 13 Date Analyzed: 09/03/92

Column: (pack/cap) CAP Dilution Factor: 1.0

CAS NO.	COMPOUND	CONCENTRATION UNITS: (ug/L or ug/Kg) UG/KG	Q
74-87-3	Chloromethane	11	U
74-83-9	Bromomethane	11	U
75-01-4	Vinyl Chloride	11	U
75-00-3	Chloroethane	11	U
75-09-2	Methylene Chloride	12	
67-64-1	Acetone	15	
75-15-0	Carbon Disulfide	6	U
75-35-4	1,1-Dichloroethene	6	U
75-34-3	1,1-Dichloroethane	6	U
156-60-5	trans-1,2-Dichloroethene	6	U
156-59-2	cis-1,2-Dichloroethene	6	U
67-66-3	Chloroform	6	U
107-06-2	1,2-Dichloroethane	6	U
78-93-3	2-Butanone	11	U
71-55-6	1,1,1-Trichloroethane	6	U
56-23-5	Carbon Tetrachloride	6	U
108-05-4	Vinyl Acetate	11	U
75-27-4	Bromodichloromethane	6	U
78-87-5	1,2-Dichloropropane	6	U
10061-01-5	cis-1,3-Dichloropropene	6	U
79-01-6	Trichloroethene	6	U
124-48-1	Dibromochloromethane	6	U
79-00-5	1,1,2-Trichloroethane	6	U
71-43-2	Benzene	6	U
10061-02-6	trans-1,3-Dichloropropene	6	U
75-25-2	Bromoform	6	U
108-10-1	4-Methyl-2-Pentanone	11	U
591-78-6	2-Hexanone	11	U
127-18-4	Tetrachloroethene	6	U
79-34-5	1,1,2,2-Tetrachloroethane	6	U
108-88-3	Toluene	6	U
108-90-7	Chlorobenzene	6	U
100-41-4	Ethylbenzene	6	U
100-42-5	Styrene	6	U
1330-20-7	Xylene (total)	6	U

1A
VOLATILE ORGANICS ANALYSIS DATA SHEET

EPA SAMPLE NO.

B6-S2

Lab Name: PNELI Contract: Y-PAY-MOR

Lab Code: PNELI Case No.: 4329 SAS No.: _____ SDG No.: B5-S4

Matrix: (soil/water) SOIL Lab Sample ID: 4329-03

Sample wt/vol: 5.0 (g/mL) G Lab File ID: B8811

Level: (low/med) LOW Date Received: 08/31/92

% Moisture: not dec. 13 Date Analyzed: 09/02/92

Column: (pack/cap) CAP Dilution Factor: 1.0

CAS NO.	COMPOUND	CONCENTRATION UNITS: (ug/L or ug/Kg) UG/KG	Q
74-87-3	Chloromethane	11	U
74-83-9	Bromomethane	11	U
75-01-4	Vinyl Chloride	11	U
75-00-3	Chloroethane	11	U
75-09-2	Methylene Chloride	13	
67-64-1	Acetone	12	
75-15-0	Carbon Disulfide	6	U
75-35-4	1,1-Dichloroethene	6	U
75-34-3	1,1-Dichloroethane	6	U
156-60-5	trans-1,2-Dichloroethene	6	U
156-59-2	cis-1,2-Dichloroethene	3	J
67-66-3	Chloroform	6	U
107-06-2	1,2-Dichloroethane	6	U
78-93-3	2-Butanone	11	U
71-55-6	1,1,1-Trichloroethane	6	U
56-23-5	Carbon Tetrachloride	6	U
108-05-4	Vinyl Acetate	11	U
75-27-4	Bromodichloromethane	6	U
78-87-5	1,2-Dichloropropane	6	U
10061-01-5	cis-1,3-Dichloropropene	6	U
79-01-6	Trichloroethene	6	U
124-48-1	Dibromochloromethane	6	U
79-00-5	1,1,2-Trichloroethane	6	U
71-43-2	Benzene	6	U
10061-02-6	trans-1,3-Dichloropropene	6	U
75-25-2	Bromoform	6	U
108-10-1	4-Methyl-2-Pentanone	11	U
591-78-6	2-Hexanone	11	U
127-18-4	Tetrachloroethene	62	
79-34-5	1,1,2,2-Tetrachloroethane	6	U
108-88-3	Toluene	6	U
108-90-7	Chlorobenzene	6	U
100-41-4	Ethylbenzene	6	U
100-42-5	Styrene	6	U
1330-20-7	Xylene (total)	6	U

1E

VOLATILE ORGANICS ANALYSIS DATA SHEET
TENTATIVELY IDENTIFIED COMPOUNDS

EPA SAMPLE NO.

B6-S2

Lab Name: PNELI_____ Contract: Y-PAY-MOR__

Lab Code: PNELI__ Case No.: 4329__ SAS No.: _____ SDG No.: B5-S4_

Matrix: (soil/water) SOIL__ Lab Sample ID: 4329-03_____

Sample wt/vol: __5.0 (g/mL) G___ Lab File ID: B8811_____

Level: (low/med) LOW___ Date Received: 08/31/92

% Moisture: not dec. __13 Date Analyzed: 09/02/92

Column (pack/cap) CAP___ Dilution Factor: 1.0_____

Number TICs found: __0

CONCENTRATION UNITS:
(ug/L or ug/Kg) UG/KG

CAS NUMBER	COMPOUND NAME	RT	EST. CONC.	Q

1A
VOLATILE ORGANICS ANALYSIS DATA SHEET

EPA SAMPLE NO.

B6-S3

Lab Name: PNELI Contract: Y-PAY-MOR

Lab Code: PNELI Case No.: 4329 SAS No.: SDG No.: B5-S4

Matrix: (soil/water) SOIL Lab Sample ID: 4329-04

Sample wt/vol: 5.0 (g/mL) G Lab File ID: B8812

Level: (low/med) LOW Date Received: 08/31/92

% Moisture: not dec. 31 Date Analyzed: 09/02/92

Column: (pack/cap) CAP Dilution Factor: 1.0

CAS NO.	COMPOUND	CONCENTRATION UNITS: (ug/L or ug/Kg) UG/KG	Q
74-87-3	Chloromethane	14	U
74-83-9	Bromomethane	14	U
75-01-4	Vinyl Chloride	14	U
75-00-3	Chloroethane	14	U
75-09-2	Methylene Chloride	21	
67-64-1	Acetone	110	
75-15-0	Carbon Disulfide	7	U
75-35-4	1,1-Dichloroethene	7	U
75-34-3	1,1-Dichloroethane	7	U
156-60-5	trans-1,2-Dichloroethene	7	U
156-59-2	cis-1,2-Dichloroethene	3	J
67-66-3	Chloroform	7	U
107-06-2	1,2-Dichloroethane	7	U
78-93-3	2-Butanone	10	BJ
71-55-6	1,1,1-Trichloroethane	7	U
56-23-5	Carbon Tetrachloride	7	U
108-05-4	Vinyl Acetate	14	U
75-27-4	Bromodichloromethane	7	U
78-87-5	1,2-Dichloropropane	7	U
10061-01-5	cis-1,3-Dichloropropene	7	U
79-01-6	Trichloroethene	7	U
124-48-1	Dibromochloromethane	7	U
79-00-5	1,1,2-Trichloroethane	7	U
71-43-2	Benzene	7	U
10061-02-6	trans-1,3-Dichloropropene	7	U
75-25-2	Bromoform	7	U
108-10-1	4-Methyl-2-Pentanone	14	U
591-78-6	2-Hexanone	14	U
127-18-4	Tetrachloroethene	4	J
79-34-5	1,1,2,2-Tetrachloroethane	7	U
108-88-3	Toluene	7	U
108-90-7	Chlorobenzene	7	U
100-41-4	Ethylbenzene	7	U
100-42-5	Styrene	7	U
1330-20-7	Xylene (total)	7	U

1E

VOLATILE ORGANICS ANALYSIS DATA SHEET
TENTATIVELY IDENTIFIED COMPOUNDS

EPA SAMPLE NO.

B6-S3

Lab Name: PNELI_____ Contract: Y-PAY-MOR__

Lab Code: PNELI__ Case No.: 4329__ SAS No.: _____ SDG No.: B5-S4_

Matrix: (soil/water) SOIL__ Lab Sample ID: 4329-04_____

Sample wt/vol: __5.0 (g/mL) G___ Lab File ID: B8812_____

Level: (low/med) LOW___ Date Received: 08/31/92

% Moisture: not dec. __31 Date Analyzed: 09/02/92

Column (pack/cap) CAP___ Dilution Factor: 1.0_____

Number TICs found: __4

CONCENTRATION UNITS:
(ug/L or ug/Kg) UG/KG

CAS NUMBER	COMPOUND NAME	RT	EST. CONC.	Q
1.	UNKNOWN HYDROCARBON	12.12	5.8	JN
2.	UNKNOWN ALKYLCYCLOALKANE	12.99	36	JN
3.	Bicycloheptane, trimethyl-	13.14	4.3	JN
4.	UNKNOWN C4 ALKYLBENZENE	14.26	14	JN

1A
VOLATILE ORGANICS ANALYSIS DATA SHEET

EPA SAMPLE NO.

B7-S2

Lab Name: PNELI Contract: Y-PAY-MOR

Lab Code: PNELI Case No.: 4329 SAS No.: SDG No.: B5-S4

Matrix: (soil/water) SOIL Lab Sample ID: 4329-05

Sample wt/vol: 5.0 (g/mL) G Lab File ID: B8813

Level: (low/med) LOW Date Received: 08/31/92

% Moisture: not dec. 13 Date Analyzed: 09/02/92

Column: (pack/cap) CAP Dilution Factor: 1.0

CAS NO.	COMPOUND	CONCENTRATION UNITS: (ug/L or ug/Kg) UG/KG	Q
74-87-3	Chloromethane	11	U
74-83-9	Bromomethane	11	U
75-01-4	Vinyl Chloride	11	U
75-00-3	Chloroethane	11	U
75-09-2	Methylene Chloride	8	
67-64-1	Acetone	77	
75-15-0	Carbon Disulfide	6	U
75-35-4	1,1-Dichloroethene	6	U
75-34-3	1,1-Dichloroethane	6	U
156-60-5	trans-1,2-Dichloroethene	3	J
156-59-2	cis-1,2-Dichloroethene	240	E
67-66-3	Chloroform	6	U
107-06-2	1,2-Dichloroethane	6	U
78-93-3	2-Butanone	11	U
71-55-6	1,1,1-Trichloroethane	6	U
56-23-5	Carbon Tetrachloride	6	U
108-05-4	Vinyl Acetate	11	U
75-27-4	Bromodichloromethane	6	U
78-87-5	1,2-Dichloropropane	6	U
10061-01-5	cis-1,3-Dichloropropene	6	U
79-01-6	Trichloroethene	6	U
124-48-1	Dibromochloromethane	6	U
79-00-5	1,1,2-Trichloroethane	6	U
71-43-2	Benzene	6	U
10061-02-6	trans-1,3-Dichloropropene	6	U
75-25-2	Bromoform	6	U
108-10-1	4-Methyl-2-Pentanone	11	U
591-78-6	2-Hexanone	11	U
127-18-4	Tetrachloroethene	460	E
79-34-5	1,1,2,2-Tetrachloroethane	6	U
108-88-3	Toluene	1	J
108-90-7	Chlorobenzene	6	U
100-41-4	Ethylbenzene	6	U
100-42-5	Styrene	6	U
1330-20-7	Xylene (total)	6	U

1E

VOLATILE ORGANICS ANALYSIS DATA SHEET
TENTATIVELY IDENTIFIED COMPOUNDS

EPA SAMPLE NO.

B7-S2

Lab Name: PNELI_____ Contract: Y-PAY-MOR__

Lab Code: PNELI__ Case No.: 4329__ SAS No.: _____ SDG No.: B5-S4_

Matrix: (soil/water) SOIL__ Lab Sample ID: 4329-05_____

Sample wt/vol: __5.0 (g/mL) G___ Lab File ID: B8813_____

Level: (low/med) LOW___ Date Received: 08/31/92

% Moisture: not dec. __13 Date Analyzed: 09/02/92

Column (pack/cap) CAP___ Dilution Factor: 1.0_____

Number TICs found: __3

CONCENTRATION UNITS:
(ug/L or ug/Kg) UG/KG

CAS NUMBER	COMPOUND NAME	RT	EST. CONC.	Q
1.	UNKNOWN ALKYLCYCLOALKANE	13.02	62	JN
2.	Bicycloheptanone, trimethyl-	16.14	3.4	JN
3.	Bicycloheptanone, trimethyl-	17.40	3.4	JN

1A
VOLATILE ORGANICS ANALYSIS DATA SHEET

EPA SAMPLE NO.

B7-S2DL

Lab Name: PNELI Contract: Y-PAY-MOR

Lab Code: PNELI Case No.: 4329 SAS No.: SDG No.: B5-S4

Matrix: (soil/water) SOIL Lab Sample ID: 4329-05DL

Sample wt/vol: 1.0 (g/mL) G Lab File ID: B8834

Level: (low/med) LOW Date Received: 08/31/92

% Moisture: not dec. 13 Date Analyzed: 09/03/92

Column: (pack/cap) CAP Dilution Factor: 1.0

CAS NO.	COMPOUND	CONCENTRATION UNITS: (ug/L or ug/Kg) UG/KG	Q
74-87-3	Chloromethane	57	U
74-83-9	Bromomethane	57	U
75-01-4	Vinyl Chloride	57	U
75-00-3	Chloroethane	57	U
75-09-2	Methylene Chloride	90	D
67-64-1	Acetone	120	D
75-15-0	Carbon Disulfide	29	U
75-35-4	1,1-Dichloroethene	29	U
75-34-3	1,1-Dichloroethane	29	U
156-60-5	trans-1,2-Dichloroethene	29	U
156-59-2	cis-1,2-Dichloroethene	420	D
67-66-3	Chloroform	29	U
107-06-2	1,2-Dichloroethane	29	U
78-93-3	2-Butanone	57	U
71-55-6	1,1,1-Trichloroethane	29	U
56-23-5	Carbon Tetrachloride	29	U
108-05-4	Vinyl Acetate	57	U
75-27-4	Bromodichloromethane	29	U
78-87-5	1,2-Dichloropropane	29	U
10061-01-5	cis-1,3-Dichloropropene	29	U
79-01-6	Trichloroethene	29	U
124-48-1	Dibromochloromethane	29	U
79-00-5	1,1,2-Trichloroethane	29	U
71-43-2	Benzene	29	U
10061-02-6	trans-1,3-Dichloropropene	29	U
75-25-2	Bromoform	29	U
108-10-1	4-Methyl-2-Pentanone	57	U
591-78-6	2-Hexanone	57	U
127-18-4	Tetrachloroethene	570	D
79-34-5	1,1,2,2-Tetrachloroethane	29	U
108-88-3	Toluene	29	U
108-90-7	Chlorobenzene	29	U
100-41-4	Ethylbenzene	29	U
100-42-5	Styrene	29	U
1330-20-7	Xylene (total)	29	U

1E

VOLATILE ORGANICS ANALYSIS DATA SHEET
TENTATIVELY IDENTIFIED COMPOUNDS

EPA SAMPLE NO.

B7-S2DL

Lab Name: PNELI_____ Contract: Y-PAY-MOR__

Lab Code: PNELI__ Case No.: 4329__ SAS No.: _____ SDG No.: B5-S4_

Matrix: (soil/water) SOIL__ Lab Sample ID: 4329-05DL____

Sample wt/vol: __1.0 (g/mL) G___ Lab File ID: B8834_____

Level: (low/med) LOW___ Date Received: 08/31/92

% Moisture: not dec. __13 Date Analyzed: 09/03/92

Column (pack/cap) CAP___ Dilution Factor: 1.0_____

Number TICs found: __2

CONCENTRATION UNITS:
(ug/L or ug/Kg) UG/KG

CAS NUMBER	COMPOUND NAME	RT	EST. CONC.	Q
1. 67630	ISOPROPANOL	3.47	46	J
2.	UNKNOWN ALKYLCYCLOHEXANE	13.02	140	JN

1A
VOLATILE ORGANICS ANALYSIS DATA SHEET

EPA SAMPLE NO.

B7-S3

Lab Name: PNELI Contract: Y-PAY-MOR

Lab Code: PNELI Case No.: 4329 SAS No.: SDG No.: B5-S4

Matrix: (soil/water) SOIL Lab Sample ID: 4329-06

Sample wt/vol: 5.0 (g/mL) G Lab File ID: B8814

Level: (low/med) LOW Date Received: 08/31/92

% Moisture: not dec. 11 Date Analyzed: 09/02/92

Column: (pack/cap) CAP Dilution Factor: 1.0

CAS NO.	COMPOUND	CONCENTRATION UNITS: (ug/L or ug/Kg) UG/KG	Q
74-87-3	Chloromethane	11	U
74-83-9	Bromomethane	11	U
75-01-4	Vinyl Chloride	11	U
75-00-3	Chloroethane	11	U
75-09-2	Methylene Chloride	6	
67-64-1	Acetone	150	
75-15-0	Carbon Disulfide	6	U
75-35-4	1,1-Dichloroethene	6	U
75-34-3	1,1-Dichloroethane	6	U
156-60-5	trans-1,2-Dichloroethene	6	U
156-59-2	cis-1,2-Dichloroethene	6	U
67-66-3	Chloroform	6	U
107-06-2	1,2-Dichloroethane	6	U
78-93-3	2-Butanone	4	BJ
71-55-6	1,1,1-Trichloroethane	6	U
56-23-5	Carbon Tetrachloride	6	U
108-05-4	Vinyl Acetate	11	U
75-27-4	Bromodichloromethane	6	U
78-87-5	1,2-Dichloropropane	6	U
10061-01-5	cis-1,3-Dichloropropene	6	U
79-01-6	Trichloroethene	6	U
124-48-1	Dibromochloromethane	6	U
79-00-5	1,1,2-Trichloroethane	6	U
71-43-2	Benzene	6	U
10061-02-6	trans-1,3-Dichloropropene	6	U
75-25-2	Bromoform	6	U
108-10-1	4-Methyl-2-Pentanone	11	U
591-78-6	2-Hexanone	11	U
127-18-4	Tetrachloroethene	6	U
79-34-5	1,1,2,2-Tetrachloroethane	6	U
108-88-3	Toluene	6	U
108-90-7	Chlorobenzene	6	U
100-41-4	Ethylbenzene	6	U
100-42-5	Styrene	6	U
1330-20-7	Xylene (total)	6	U

1A
VOLATILE ORGANICS ANALYSIS DATA SHEET

EPA SAMPLE NO.

B8-S2

Lab Name: PNELI Contract: Y-PAY-MOR

Lab Code: PNELI Case No.: 4329 SAS No.: SDG No.: B5-S4

Matrix: (soil/water) SOIL Lab Sample ID: 4329-07

Sample wt/vol: 5.0 (g/mL) G Lab File ID: B8823

Level: (low/med) LOW Date Received: 08/31/92

% Moisture: not dec. 15 Date Analyzed: 09/03/92

Column: (pack/cap) CAP Dilution Factor: 1.0

CAS NO.	COMPOUND	CONCENTRATION UNITS: (ug/L or ug/Kg) UG/KG	Q
74-87-3	Chloromethane	12	U
74-83-9	Bromomethane	12	U
75-01-4	Vinyl Chloride	12	U
75-00-3	Chloroethane	12	U
75-09-2	Methylene Chloride	8	
67-64-1	Acetone	98	
75-15-0	Carbon Disulfide	6	U
75-35-4	1,1-Dichloroethene	6	U
75-34-3	1,1-Dichloroethane	6	U
156-60-5	trans-1,2-Dichloroethene	6	U
156-59-2	cis-1,2-Dichloroethene	1	J
67-66-3	Chloroform	6	U
107-06-2	1,2-Dichloroethane	6	U
78-93-3	2-Butanone	12	U
71-55-6	1,1,1-Trichloroethane	6	U
56-23-5	Carbon Tetrachloride	6	U
108-05-4	Vinyl Acetate	12	U
75-27-4	Bromodichloromethane	6	U
78-87-5	1,2-Dichloropropane	6	U
10061-01-5	cis-1,3-Dichloropropene	6	U
79-01-6	Trichloroethene	6	U
124-48-1	Dibromochloromethane	6	U
79-00-5	1,1,2-Trichloroethane	6	U
71-43-2	Benzene	6	U
10061-02-6	trans-1,3-Dichloropropene	6	U
75-25-2	Bromoform	6	U
108-10-1	4-Methyl-2-Pentanone	12	U
591-78-6	2-Hexanone	12	U
127-18-4	Tetrachloroethene	6	U
79-34-5	1,1,2,2-Tetrachloroethane	6	U
108-88-3	Toluene	6	U
108-90-7	Chlorobenzene	6	U
100-41-4	Ethylbenzene	6	U
100-42-5	Styrene	6	U
1330-20-7	Xylene (total)	6	U

1E

VOLATILE ORGANICS ANALYSIS DATA SHEET
TENTATIVELY IDENTIFIED COMPOUNDS

EPA SAMPLE NO.

B8-S2

Lab Name: PNELI Contract: Y-PAY-MOR

Lab Code: PNELI Case No.: 4329 SAS No.: SDG No.: B5-S4

Matrix: (soil/water) SOIL Lab Sample ID: 4329-07

Sample wt/vol: 5.0 (g/mL) G Lab File ID: B8823

Level: (low/med) LOW Date Received: 08/31/92

% Moisture: not dec. 15 Date Analyzed: 09/03/92

Column (pack/cap) CAP Dilution Factor: 1.0

Number TICs found: 4

CONCENTRATION UNITS:
(ug/L or ug/Kg) UG/KG

CAS NUMBER	COMPOUND NAME	RT	EST. CONC.	Q
1.	UNKNOWN ALKYLCYCLOHEXANE	12.99	49	JN
2.	Bicycloheptane, trimethyl-	13.15	7.1	JN
3.	Bicycloheptanone, trimethyl-	16.12	4.7	JN
4.	Bicycloheptanone, trimethyl-	17.38	3.5	JN

1A
VOLATILE ORGANICS ANALYSIS DATA SHEET

EPA SAMPLE NO.

B8-S3

Lab Name: PNELI Contract: Y-PAY-MOR

Lab Code: PNELI Case No.: 4329 SAS No.: SDG No.: B5-S4

Matrix: (soil/water) SOIL Lab Sample ID: 4329-08

Sample wt/vol: 5.0 (g/mL) G Lab File ID: B8816

Level: (low/med) LOW Date Received: 08/31/92

% Moisture: not dec. 11 Date Analyzed: 09/02/92

Column: (pack/cap) CAP Dilution Factor: 1.0

CAS NO.	COMPOUND	CONCENTRATION UNITS: (ug/L or ug/Kg) UG/KG	Q
74-87-3	Chloromethane	11	U
74-83-9	Bromomethane	11	U
75-01-4	Vinyl Chloride	11	U
75-00-3	Chloroethane	11	U
75-09-2	Methylene Chloride	4	J
67-64-1	Acetone	77	
75-15-0	Carbon Disulfide	6	U
75-35-4	1,1-Dichloroethene	6	U
75-34-3	1,1-Dichloroethane	6	U
156-60-5	trans-1,2-Dichloroethene	6	U
156-59-2	cis-1,2-Dichloroethene	6	U
67-66-3	Chloroform	6	U
107-06-2	1,2-Dichloroethane	6	U
78-93-3	2-Butanone	11	U
71-55-6	1,1,1-Trichloroethane	6	U
56-23-5	Carbon Tetrachloride	6	U
108-05-4	Vinyl Acetate	11	U
75-27-4	Bromodichloromethane	6	U
78-87-5	1,2-Dichloropropane	6	U
10061-01-5	cis-1,3-Dichloropropene	6	U
79-01-6	Trichloroethene	6	U
124-48-1	Dibromochloromethane	6	U
79-00-5	1,1,2-Trichloroethane	6	U
71-43-2	Benzene	6	U
10061-02-6	trans-1,3-Dichloropropene	6	U
75-25-2	Bromoform	6	U
108-10-1	4-Methyl-2-Pentanone	11	U
591-78-6	2-Hexanone	11	U
127-18-4	Tetrachloroethene	6	U
79-34-5	1,1,2,2-Tetrachloroethane	6	U
108-88-3	Toluene	6	U
108-90-7	Chlorobenzene	6	U
100-41-4	Ethylbenzene	6	U
100-42-5	Styrene	6	U
1330-20-7	Xylene (total)	6	U

1E

VOLATILE ORGANICS ANALYSIS DATA SHEET
TENTATIVELY IDENTIFIED COMPOUNDS

EPA SAMPLE NO.

B8-S3

Lab Name: PNELI_____ Contract: Y-PAY-MOR__

Lab Code: PNELI__ Case No.: 4329__ SAS No.: _____ SDG No.: B5-S4_

Matrix: (soil/water) SOIL__ Lab Sample ID: 4329-08_____

Sample wt/vol: __5.0 (g/mL) G___ Lab File ID: B8816_____

Level: (low/med) LOW___ Date Received: 08/31/92

% Moisture: not dec. __11 Date Analyzed: 09/02/92

Column (pack/cap) CAP___ Dilution Factor: 1.0_____

Number TICs found: __1

CONCENTRATION UNITS:
(ug/L or ug/Kg) UG/KG

CAS NUMBER	COMPOUND NAME	RT	EST. CONC.	Q
1.	UNKNOWN ALKYLCYCLOHEXANE	13.02	3.4	JN

1A
VOLATILE ORGANICS ANALYSIS DATA SHEET

EPA SAMPLE NO.

B9-S2

Lab Name: PNELI Contract: Y-PAY-MOR

Lab Code: PNELI Case No.: 4329 SAS No.: SDG No.: B5-S4

Matrix: (soil/water) SOIL Lab Sample ID: 4329-09

Sample wt/vol: 5.0 (g/mL) G Lab File ID: B8815

Level: (low/med) LOW Date Received: 08/31/92

% Moisture: not dec. 17 Date Analyzed: 09/02/92

Column: (pack/cap) CAP Dilution Factor: 1.0

CAS NO.	COMPOUND	CONCENTRATION UNITS: (ug/L or ug/Kg) UG/KG	Q
74-87-3	Chloromethane	12	U
74-83-9	Bromomethane	12	U
75-01-4	Vinyl Chloride	12	U
75-00-3	Chloroethane	12	U
75-09-2	Methylene Chloride	5	J
67-64-1	Acetone	120	
75-15-0	Carbon Disulfide	6	U
75-35-4	1,1-Dichloroethene	6	U
75-34-3	1,1-Dichloroethane	6	U
156-60-5	trans-1,2-Dichloroethene	6	U
156-59-2	cis-1,2-Dichloroethene	11	
67-66-3	Chloroform	6	U
107-06-2	1,2-Dichloroethane	6	U
78-93-3	2-Butanone	3	BJ
71-55-6	1,1,1-Trichloroethane	6	U
56-23-5	Carbon Tetrachloride	6	U
108-05-4	Vinyl Acetate	12	U
75-27-4	Bromodichloromethane	6	U
78-87-5	1,2-Dichloropropane	6	U
10061-01-5	cis-1,3-Dichloropropene	6	U
79-01-6	Trichloroethene	6	U
124-48-1	Dibromochloromethane	6	U
79-00-5	1,1,2-Trichloroethane	6	U
71-43-2	Benzene	6	U
10061-02-6	trans-1,3-Dichloropropene	6	U
75-25-2	Bromoform	6	U
108-10-1	4-Methyl-2-Pentanone	12	U
591-78-6	2-Hexanone	12	U
127-18-4	Tetrachloroethene	15	
79-34-5	1,1,2,2-Tetrachloroethane	6	U
108-88-3	Toluene	6	U
108-90-7	Chlorobenzene	6	U
100-41-4	Ethylbenzene	6	U
100-42-5	Styrene	6	U
1330-20-7	Xylene (total)	6	U

1E

VOLATILE ORGANICS ANALYSIS DATA SHEET
TENTATIVELY IDENTIFIED COMPOUNDS

EPA SAMPLE NO.

B9-S2

Lab Name: PNELI Contract: Y-PAY-MOR

Lab Code: PNELI Case No.: 4329 SAS No.: SDG No.: B5-S4

Matrix: (soil/water) SOIL Lab Sample ID: 4329-09

Sample wt/vol: 5.0 (g/mL) G Lab File ID: B8815

Level: (low/med) LOW Date Received: 08/31/92

% Moisture: not dec. 17 Date Analyzed: 09/02/92

Column (pack/cap) CAP Dilution Factor: 1.0

Number TICs found: 6

CONCENTRATION UNITS:
(ug/L or ug/Kg) UG/KG

CAS NUMBER	COMPOUND NAME	RT	EST. CONC.	Q
1.	UNKNOWN TERPENE	12.15	29	JN
2.	UNKNOWN TERPENE	12.57	6.0	JN
3.	UNKNOWN ALKYLCYCLOHEXANE	13.02	22	JN
4.	UNKNOWN	13.19	7.2	JN
5.	UNKNOWN TERPENE	14.23	11	JN
6.	Bicycloheptanone, trimethy!-	16.15	6.0	JN

1A
VOLATILE ORGANICS ANALYSIS DATA SHEET

EPA SAMPLE NO.

B9-S3

Lab Name: PNELI Contract: Y-PAY-MOR

Lab Code: PNELI Case No.: 4329 SAS No.: SDG No.: B5-S4

Matrix: (soil/water) SOIL Lab Sample ID: 4329-10

Sample wt/vol: 5.0 (g/mL) G Lab File ID: B8824

Level: (low/med) LOW Date Received: 08/31/92

% Moisture: not dec. 12 Date Analyzed: 09/03/92

Column: (pack/cap) CAP Dilution Factor: 1.0

CAS NO.	COMPOUND	CONCENTRATION UNITS: (ug/L or ug/Kg) UG/KG	Q
74-87-3	Chloromethane	11	U
74-83-9	Bromomethane	11	U
75-01-4	Vinyl Chloride	11	U
75-00-3	Chloroethane	11	U
75-09-2	Methylene Chloride	5	J
67-64-1	Acetone	170	
75-15-0	Carbon Disulfide	6	U
75-35-4	1,1-Dichloroethene	6	U
75-34-3	1,1-Dichloroethane	6	U
156-60-5	trans-1,2-Dichloroethene	6	U
156-59-2	cis-1,2-Dichloroethene	6	U
67-66-3	Chloroform	6	U
107-06-2	1,2-Dichloroethane	6	U
78-93-3	2-Butanone	8	J
71-55-6	1,1,1-Trichloroethane	6	U
56-23-5	Carbon Tetrachloride	6	U
108-05-4	Vinyl Acetate	11	U
75-27-4	Bromodichloromethane	6	U
78-87-5	1,2-Dichloropropane	6	U
10061-01-5	cis-1,3-Dichloropropene	6	U
79-01-6	Trichloroethene	6	U
124-48-1	Dibromochloromethane	6	U
79-00-5	1,1,2-Trichloroethane	6	U
71-43-2	Benzene	6	U
10061-02-6	trans-1,3-Dichloropropene	6	U
75-25-2	Bromoform	6	U
108-10-1	4-Methyl-2-Pentanone	11	U
591-78-6	2-Hexanone	11	U
127-18-4	Tetrachloroethene	6	U
79-34-5	1,1,2,2-Tetrachloroethane	6	U
108-88-3	Toluene	6	U
108-90-7	Chlorobenzene	6	U
100-41-4	Ethylbenzene	6	U
100-42-5	Styrene	6	U
1330-20-7	Xylene (total)	6	U

1E

VOLATILE ORGANICS ANALYSIS DATA SHEET
TENTATIVELY IDENTIFIED COMPOUNDS

EPA SAMPLE NO.

B9-S3

Lab Name: PNELI_____ Contract: Y-PAY-MOR__

Lab Code: PNELI__ Case No.: 4329__ SAS No.: _____ SDG No.: B5-S4_

Matrix: (soil/water) SOIL__ Lab Sample ID: 4329-10_____

Sample wt/vol: __5.0 (g/mL) G___ Lab File ID: B8824_____

Level: (low/med) LOW___ Date Received: 08/31/92

% Moisture: not dec. __12 Date Analyzed: 09/03/92

Column (pack/cap) CAP___ Dilution Factor: 1.0_____

Number TICs found: __0

CONCENTRATION UNITS:
(ug/L or ug/Kg) UG/KG

CAS NUMBER	COMPOUND NAME	RT	EST. CONC.	Q

2B
SOIL VOLATILE SURROGATE RECOVERY

Lab Name: PNELI_____ Contract: Y-PAY-MOR__ _____

Lab Code: PNELI__ Case No.: 4329__ SAS No.: _____ SDG No.: B5-S4_

Level:(low/med) LOW___ ___

	EPA SAMPLE NO.	S1 (TOL) #	S2 (BFB) #	S3 (DCE) #	OTHER	TOT OUT
01	B10-S1	103	98	102	0	0
02	B10-S2	101	92	101	0	0
03	B10-S3	102	97	101	0	0
04	B5-S4	105	95	101	0	0
05	B5-S8	108	101	104	0	0
06	B6-S2	109	101	96	0	0
07	B6-S3	98	100	97	0	0
08	B7-S2	107	77	97	0	0
09	B7-S2DL	101	98	105	0	0
10	B7-S3	101	99	95	0	0
11	B8-S2	106	97	107	0	0
12	B8-S3	100	99	100	0	0
13	B9-S2	110	88	104	0	0
14	B9-S3	104	92	99	0	0
15	B5-S8MS	94	91	95	0	0
16	B5-S8MSD	105	101	111	0	0
17	VBLKBN	101	97	96	0	0
18	VBLKBO	94	93	105	0	0
19	VBLKBP	105	100	105	0	0
20	VBLKBQ	98	96	95	0	0

		QC LIMITS
S1 (TOL)	= Toluene-d8	(81-117)
S2 (BFB)	= Bromofluorobenzene	(74-121)
S3 (DCE)	= 1,2-Dichloroethane-d4	(70-121)

Column to be used to flag recovery values

* Values outside of contract required QC limits

D Surrogates diluted out

2B
SOIL VOLATILE SURROGATE RECOVERY

Lab Name: PNELI_____ Contract: Y-PAY-MOR__ _____

Lab Code: PNELI__ Case No.: 4329__ SAS No.: _____ SDG No.: B5-S4_

Level:(low/med) MED___ ___

	EPA SAMPLE NO.	S1 (TOL) #	S2 (BFB) #	S3 (DCE) #	OTHER	TOT OUT
01	B10-S1DL	96	93	94	0	0
02	B10-S2DL	103	101	98	0	0
03	B10-S2MS	102	103	102	0	0
04	B10-S2MSD	103	102	105	0	0
05	VBLKAR	102	102	97	0	0

		QC LIMITS
S1 (TOL)	= Toluene-d8	(81-117)
S2 (BFB)	= Bromofluorobenzene	(74-121)
S3 (DCE)	= 1,2-Dichloroethane-d4	(70-121)

Column to be used to flag recovery values

* Values outside of contract required QC limits

D Surrogates diluted out

3B

SOIL VOLATILE MATRIX SPIKE/MATRIX SPIKE DUPLICATE RECOVERY

Lab Name: PNELI_____ Contract: Y-PAY-MOR__ _____

Lab Code: PNELI__ Case No.: 4329__ SAS No.: _____ SDG No.: B5-S4_

Matrix Spike - EPA Sample No.: B10-S2DL_____ Level:(low/med) MED___

COMPOUND	SPIKE ADDED (ug/Kg)	SAMPLE CONCENTRATION (ug/Kg)	MS CONCENTRATION (ug/Kg)	MS % REC #	QC LIMITS REC.
1,1-Dichloroethene_____	6790	0	4700	69	59-172
Trichloroethene_____	6790	0	6700	99	62-137
Benzene_____	6790	0	6900	102	66-142
Toluene_____	6790	0	6640	98	59-139
Chlorobenzene_____	6790	0	6880	101	60-133

COMPOUND	SPIKE ADDED (ug/Kg)	MSD CONCENTRATION (ug/Kg)	MSD % REC #	% RPD #	QC LIMITS RPD	QC LIMITS REC.
1,1-Dichloroethene_____	6790	4840	71	-3	22	59-172
Trichloroethene_____	6790	6790	100	-1	24	62-137
Benzene_____	6790	6780	100	2	21	66-142
Toluene_____	6790	6660	98	0	21	59-139
Chlorobenzene_____	6790	6980	103	-2	21	60-133

Column to be used to flag recovery and RPD values with an asterisk

* Values outside of QC limits

RPD: __0 out of __5 outside limits _ _
Spike Recovery: __0 out of _10 outside limits _ __

COMMENTS: 4239-11 B10-S2
INST.ID:HPMSD-A (30M

3B

SOIL VOLATILE MATRIX SPIKE/MATRIX SPIKE DUPLICATE RECOVERY

Lab Name: PNELI_____ Contract: Y-PAY-MOR__ _____

Lab Code: PNELI__ Case No.: 4329__ SAS No.: _____ SDG No.: B5-S4_

Matrix Spike - EPA Sample No.: B5-S8_____ Level:(low/med) LOW___

COMPOUND	SPIKE ADDED (ug/Kg)	SAMPLE CONCENTRATION (ug/Kg)	MS CONCENTRATION (ug/Kg)	MS % REC #	QC LIMITS REC.
1,1-Dichloroethene_____	57.5	0	54.8	95	59-172
Trichloroethene_____	57.5	0	62.0	108	62-137
Benzene_____	57.5	0	61.7	107	66-142
Toluene_____	57.5	0	60.3	105	59-139
Chlorobenzene_____	57.5	0	61.5	107	60-133

COMPOUND	SPIKE ADDED (ug/Kg)	MSD CONCENTRATION (ug/Kg)	MSD % REC #	% RPD #	QC LIMITS RPD	QC LIMITS REC.
1,1-Dichloroethene_____	57.5	60.1	104	-9	22	59-172
Trichloroethene_____	57.5	62.8	109	-1	24	62-137
Benzene_____	57.5	61.4	107	0	21	66-142
Toluene_____	57.5	64.9	113	-7	21	59-139
Chlorobenzene_____	57.5	63.4	110	-3	21	60-133

Column to be used to flag recovery and RPD values with an asterisk

* Values outside of QC limits

RPD: __0 out of __5 outside limits _ _
Spike Recovery: __0 out of _10 outside limits _ __

COMMENTS: 4329-01 B5-S8
INST.ID:HPMSD-B (30M

4A

VOLATILE METHOD BLANK SUMMARY

Lab Name: PNELI_____ Contract: Y-PAY-MOR__ _____

Lab Code: PNELI__ Case No.: 4329__ SAS No.: _____ SDG No.: B5-S4_

Lab File ID: B8808_____ Lab Sample ID: VBLKBN_____

Date Analyzed: 09/02/92 Time Analyzed: 1113____

Matrix: (soil/water) SOIL__ Level:(low/med) LOW___

Instrument ID: HPMSD-B_ _____

THIS METHOD BLANK APPLIES TO THE FOLLOWING SAMPLES, MS AND MSD:

	EPA SAMPLE NO.	LAB SAMPLE ID	LAB FILE ID	TIME ANALYZED
01	B5-S4	4329-02	B8810	1228
02	B6-S2	4329-03	B8811	1300
03	B6-S3	4329-04	B8812	1332
04	B7-S2	4329-05	B8813	1526
05	B7-S3	4329-06	B8814	1607
06	B8-S3	4329-08	B8816	1711
07	B9-S2	4329-09	B8815	1639

COMMENTS: VBLKBN
INST.ID:HPMSD-B (30M

4A

VOLATILE METHOD BLANK SUMMARY

Lab Name: PNELI_____ Contract: Y-PAY-MOR__ _____

Lab Code: PNELI__ Case No.: 4329__ SAS No.: _____ SDG No.: B5-S4_

Lab File ID: B8822_____ Lab Sample ID: VBLKB0_____

Date Analyzed: 09/03/92 Time Analyzed: 0847____

Matrix: (soil/water) SOIL__ Level:(low/med) LOW___

Instrument ID: HPMSD-B_ _____

THIS METHOD BLANK APPLIES TO THE FOLLOWING SAMPLES, MS AND MSD:

	EPA SAMPLE NO.	LAB SAMPLE ID	LAB FILE ID	TIME ANALYZED
01	B10-S3	4329-12	B8825	1027
02	B7-S2DL	4329-05DL	B8834	1720
03	B8-S2	4329-07	B8823	0925
04	B9-S3	4329-10	B8824	0956
05	B5-S8MS	4329-01MS	B8831	1614
06	B5-S8MSD	4329-01MSD	B8833	1645

COMMENTS: VBLKB0
INST.ID:HPMSD-B (30M

4A

VOLATILE METHOD BLANK SUMMARY

Lab Name: PNELI_____ Contract: Y-PAY-MOR__ _____

Lab Code: PNELI__ Case No.: 4329__ SAS No.: _____ SDG No.: B5-S4_

Lab File ID: A1938_____ Lab Sample ID: VBLKAR_____

Date Analyzed: 09/03/92 Time Analyzed: 1336____

Matrix: (soil/water) SOIL__ Level:(low/med) MED___

Instrument ID: HPMSD-A_ _____

THIS METHOD BLANK APPLIES TO THE FOLLOWING SAMPLES, MS AND MSD:

	EPA SAMPLE NO.	LAB SAMPLE ID	LAB FILE ID	TIME ANALYZED
01	B10-S1DL	4329-22DL	A1940	1449
02	B10-S2DL	4329-11DL	A1941	1529
03	B10-S2MS	4329-11MS	A1942	1602
04	B10-S2MSD	4329-11MSD	A1943	1636

COMMENTS: VBLKAR
INST.ID:HPMSD-A (30M

4A

VOLATILE METHOD BLANK SUMMARY

Lab Name: PNELI_____ Contract: Y-PAY-MOR__ _____

Lab Code: PNELI__ Case No.: 4329__ SAS No.: _____ SDG No.: B5-S4_

Lab File ID: B8840_____ Lab Sample ID: VBLKBP_____

Date Analyzed: 09/04/92 Time Analyzed: 0936____

Matrix: (soil/water) SOIL__ Level:(low/med) LOW___

Instrument ID: HPMSD-B_ _____

THIS METHOD BLANK APPLIES TO THE FOLLOWING SAMPLES, MS AND MSD:

	EPA SAMPLE NO.	LAB SAMPLE ID	LAB FILE ID	TIME ANALYZED
01	B5-S8	4329-01	B8841	1015

COMMENTS: VBLKBP
INST.ID:HPMSD-B (30M

4A

VOLATILE METHOD BLANK SUMMARY

Lab Name: PNELI_____ Contract: Y-PAY-MOR__ _____

Lab Code: PNELI__ Case No.: 4329__ SAS No.: _____ SDG No.: B5-S4_

Lab File ID: B8840_____ Lab Sample ID: VBLKBP_____

Date Analyzed: 09/04/92 Time Analyzed: 0936____

Matrix: (soil/water) SOIL__ Level:(low/med) LOW___

Instrument ID: HPMSD-B_ _____

THIS METHOD BLANK APPLIES TO THE FOLLOWING SAMPLES, MS AND MSD:

	EPA SAMPLE NO.	LAB SAMPLE ID	LAB FILE ID	TIME ANALYZED
01	B5-S8	4329-01	B8841	1015

COMMENTS: VBLKBP
INST.ID:HPMSD-B (30M

FORM IV VOA 1/87 Rev.

4A

VOLATILE METHOD BLANK SUMMARY

Lab Name: PNELI_____ Contract: Y-PAY-MOR__ _____

Lab Code: PNELI__ Case No.: 4329__ SAS No.: _____ SDG No.: B5-S4_

Lab File ID: B8852_____ Lab Sample ID: VBLKBQ_____

Date Analyzed: 09/09/92 Time Analyzed: 0935____

Matrix: (soil/water) SOIL__ Level:(low/med) LOW___

Instrument ID: HPMSD-B_ _____

THIS METHOD BLANK APPLIES TO THE FOLLOWING SAMPLES, MS AND MSD:

	EPA SAMPLE NO.	LAB SAMPLE ID	LAB FILE ID	TIME ANALYZED
01	B10-S1	4329-22	B8854	1046
02	B10-S2	4329-11	B8853	1012

COMMENTS: VBLKBQ
INST.ID:HPMSD-B (30M

1A
VOLATILE ORGANICS ANALYSIS DATA SHEET

EPA SAMPLE NO.

VBLKBN

Lab Name: PNELI Contract: Y-PAY-MOR

Lab Code: PNELI Case No.: 4329 SAS No.: SDG No.: B5-S4

Matrix: (soil/water) SOIL Lab Sample ID: VBLKBN

Sample wt/vol: 5.0 (g/mL) G Lab File ID: B8808

Level: (low/med) LOW Date Received:

% Moisture: not dec. Date Analyzed: 09/02/92

Column: (pack/cap) CAP Dilution Factor: 1.0

CAS NO.	COMPOUND	CONCENTRATION UNITS: (ug/L or ug/Kg) UG/KG	Q
74-87-3	Chloromethane	10	U
74-83-9	Bromomethane	10	U
75-01-4	Vinyl Chloride	10	U
75-00-3	Chloroethane	10	U
75-09-2	Methylene Chloride	5	U
67-64-1	Acetone	10	U
75-15-0	Carbon Disulfide	5	U
75-35-4	1,1-Dichloroethene	5	U
75-34-3	1,1-Dichloroethane	5	U
156-60-5	trans-1,2-Dichloroethene	5	U
156-59-2	cis-1,2-Dichloroethene	5	U
67-66-3	Chloroform	5	U
107-06-2	1,2-Dichloroethane	5	U
78-93-3	2-Butanone	2	J
71-55-6	1,1,1-Trichloroethane	5	U
56-23-5	Carbon Tetrachloride	5	U
108-05-4	Vinyl Acetate	10	U
75-27-4	Bromodichloromethane	5	U
78-87-5	1,2-Dichloropropane	5	U
10061-01-5	cis-1,3-Dichloropropene	5	U
79-01-6	Trichloroethene	5	U
124-48-1	Dibromochloromethane	5	U
79-00-5	1,1,2-Trichloroethane	5	U
71-43-2	Benzene	5	U
10061-02-6	trans-1,3-Dichloropropene	5	U
75-25-2	Bromoform	5	U
108-10-1	4-Methyl-2-Pentanone	10	U
591-78-6	2-Hexanone	10	U
127-18-4	Tetrachloroethene	5	U
79-34-5	1,1,2,2-Tetrachloroethane	5	U
108-88-3	Toluene	5	U
108-90-7	Chlorobenzene	5	U
100-41-4	Ethylbenzene	5	U
100-42-5	Styrene	5	U
1330-20-7	Xylene (total)	5	U

1E

VOLATILE ORGANICS ANALYSIS DATA SHEET
TENTATIVELY IDENTIFIED COMPOUNDS

EPA SAMPLE NO.

VBLKBN

Lab Name: PNELI_____ Contract: Y-PAY-MOR__

Lab Code: PNELI__ Case No.: 4329__ SAS No.: _____ SDG No.: B5-S4_

Matrix: (soil/water) SOIL__ Lab Sample ID: VBLKBN_____

Sample wt/vol: __5.0 (g/mL) G___ Lab File ID: B8808_____

Level: (low/med) LOW___ Date Received: _____

% Moisture: not dec. ____ Date Analyzed: 09/02/92

Column (pack/cap) CAP___ Dilution Factor: 1.0_____

Number TICs found: __0

CONCENTRATION UNITS:
(ug/L or ug/Kg) UG/KG

CAS NUMBER	COMPOUND NAME	RT	EST. CONC.	Q

1A
VOLATILE ORGANICS ANALYSIS DATA SHEET

EPA SAMPLE NO.

VBLKBO

Lab Name: PNELI Contract: Y-PAY-MOR

Lab Code: PNELI Case No.: 4329 SAS No.: SDG No.: B5-S4

Matrix: (soil/water) SOIL Lab Sample ID: VBLKBO

Sample wt/vol: 5.0 (g/mL) G Lab File ID: B8822

Level: (low/med) LOW Date Received:

% Moisture: not dec. Date Analyzed: 09/03/92

Column: (pack/cap) CAP Dilution Factor: 1.0

CAS NO.	COMPOUND	CONCENTRATION UNITS: (ug/L or ug/Kg) UG/KG	Q
74-87-3	Chloromethane	10	U
74-83-9	Bromomethane	10	U
75-01-4	Vinyl Chloride	10	U
75-00-3	Chloroethane	10	U
75-09-2	Methylene Chloride	5	U
67-64-1	Acetone	10	U
75-15-0	Carbon Disulfide	5	U
75-35-4	1,1-Dichloroethene	5	U
75-34-3	1,1-Dichloroethane	5	U
156-60-5	trans-1,2-Dichloroethene	5	U
156-59-2	cis-1,2-Dichloroethene	5	U
67-66-3	Chloroform	5	U
107-06-2	1,2-Dichloroethane	5	U
78-93-3	2-Butanone	10	U
71-55-6	1,1,1-Trichloroethane	5	U
56-23-5	Carbon Tetrachloride	5	U
108-05-4	Vinyl Acetate	10	U
75-27-4	Bromodichloromethane	5	U
78-87-5	1,2-Dichloropropane	5	U
10061-01-5	cis-1,3-Dichloropropene	5	U
79-01-6	Trichloroethene	5	U
124-48-1	Dibromochloromethane	5	U
79-00-5	1,1,2-Trichloroethane	5	U
71-43-2	Benzene	5	U
10061-02-6	trans-1,3-Dichloropropene	5	U
75-25-2	Bromoform	5	U
108-10-1	4-Methyl-2-Pentanone	10	U
591-78-6	2-Hexanone	10	U
127-18-4	Tetrachloroethene	5	U
79-34-5	1,1,2,2-Tetrachloroethane	5	U
108-88-3	Toluene	5	U
108-90-7	Chlorobenzene	5	U
100-41-4	Ethylbenzene	5	U
100-42-5	Styrene	5	U
1330-20-7	Xylene (total)	5	U

1E

VOLATILE ORGANICS ANALYSIS DATA SHEET
TENTATIVELY IDENTIFIED COMPOUNDS

EPA SAMPLE NO.

VBLKBO

Lab Name: PNELI_____ Contract: Y-PAY-MOR__

Lab Code: PNELI__ Case No.: 4329__ SAS No.: _____ SDG No.: B5-S4_

Matrix: (soil/water) SOIL__ Lab Sample ID: VBLKBO_____

Sample wt/vol: __5.0 (g/mL) G___ Lab File ID: B8822_____

Level: (low/med) LOW___ Date Received: _____

% Moisture: not dec. ____ Date Analyzed: 09/03/92

Column (pack/cap) CAP___ Dilution Factor: 1.0_____

Number TICs found: __0

CONCENTRATION UNITS:
(ug/L or ug/Kg) UG/KG

CAS NUMBER	COMPOUND NAME	RT	EST. CONC.	Q

1A
VOLATILE ORGANICS ANALYSIS DATA SHEET

EPA SAMPLE NO.

VBLKAR

Lab Name: PNELI Contract: Y-PAY-MOR

Lab Code: PNELI Case No.: 4329 SAS No.: SDG No.: B5-S4

Matrix: (soil/water) SOIL Lab Sample ID: VBLKAR

Sample wt/vol: 4.0 (g/mL) G Lab File ID: A1938

Level: (low/med) MED Date Received:

% Moisture: not dec. Date Analyzed: 09/03/92

Column: (pack/cap) CAP Dilution Factor: 1.0

CAS NO.	COMPOUND	CONCENTRATION UNITS: (ug/L or ug/Kg) UG/KG	Q
74-87-3	Chloromethane	1200	U
74-83-9	Bromomethane	1200	U
75-01-4	Vinyl Chloride	1200	U
75-00-3	Chloroethane	1200	U
75-09-2	Methylene Chloride	360	J
67-64-1	Acetone	520	J
75-15-0	Carbon Disulfide	620	U
75-35-4	1,1-Dichloroethene	620	U
75-34-3	1,1-Dichloroethane	620	U
156-60-5	trans-1,2-Dichloroethene	620	U
156-59-2	cis-1,2-Dichloroethene	620	U
67-66-3	Chloroform	620	U
107-06-2	1,2-Dichloroethane	620	U
78-93-3	2-Butanone	1100	J
71-55-6	1,1,1-Trichloroethane	620	U
56-23-5	Carbon Tetrachloride	620	U
108-05-4	Vinyl Acetate	1200	U
75-27-4	Bromodichloromethane	620	U
78-87-5	1,2-Dichloropropane	620	U
10061-01-5	cis-1,3-Dichloropropene	620	U
79-01-6	Trichloroethene	620	U
124-48-1	Dibromochloromethane	620	U
79-00-5	1,1,2-Trichloroethane	620	U
71-43-2	Benzene	620	U
10061-02-6	trans-1,3-Dichloropropene	620	U
75-25-2	Bromoform	620	U
108-10-1	4-Methyl-2-Pentanone	1200	U
591-78-6	2-Hexanone	1200	U
127-18-4	Tetrachloroethene	620	U
79-34-5	1,1,2,2-Tetrachloroethane	620	U
108-88-3	Toluene	620	U
108-90-7	Chlorobenzene	620	U
100-41-4	Ethylbenzene	620	U
100-42-5	Styrene	620	U
1330-20-7	Xylene (total)	620	U

1E

VOLATILE ORGANICS ANALYSIS DATA SHEET
TENTATIVELY IDENTIFIED COMPOUNDS

EPA SAMPLE NO.

VBLKAR

Lab Name: PNELI_____ Contract: Y-PAY-MOR__

Lab Code: PNELI__ Case No.: 4329__ SAS No.: _____ SDG No.: B5-S4_

Matrix: (soil/water) SOIL__ Lab Sample ID: VBLKAR_____

Sample wt/vol: __4.0 (g/mL) G___ Lab File ID: A1938_____

Level: (low/med) MED___ Date Received: _____

% Moisture: not dec. ____ Date Analyzed: 09/03/92

Column (pack/cap) CAP___ Dilution Factor: 1.0_____

Number TICs found: __0

CONCENTRATION UNITS:
(ug/L or ug/Kg) UG/KG

CAS NUMBER	COMPOUND NAME	RT	EST. CONC.	Q

1A
VOLATILE ORGANICS ANALYSIS DATA SHEET

EPA SAMPLE NO.

VBLKBP

Lab Name: PNELI Contract: Y-PAY-MOR

Lab Code: PNELI Case No.: 4329 SAS No.: SDG No.: B5-S4

Matrix: (soil/water) SOIL Lab Sample ID: VBLKBP

Sample wt/vol: 5.0 (g/mL) G Lab File ID: B8840

Level: (low/med) LOW Date Received:

% Moisture: not dec. Date Analyzed: 09/04/92

Column: (pack/cap) CAP Dilution Factor: 1.0

CAS NO.	COMPOUND	CONCENTRATION UNITS: (ug/L or ug/Kg) UG/KG	Q
74-87-3	Chloromethane	10	U
74-83-9	Bromomethane	10	U
75-01-4	Vinyl Chloride	10	U
75-00-3	Chloroethane	10	U
75-09-2	Methylene Chloride	3	J
67-64-1	Acetone	6	J
75-15-0	Carbon Disulfide	5	U
75-35-4	1,1-Dichloroethene	5	U
75-34-3	1,1-Dichloroethane	5	U
156-60-5	trans-1,2-Dichloroethene	5	U
156-59-2	cis-1,2-Dichloroethene	5	U
67-66-3	Chloroform	5	U
107-06-2	1,2-Dichloroethane	5	U
78-93-3	2-Butanone	10	U
71-55-6	1,1,1-Trichloroethane	5	U
56-23-5	Carbon Tetrachloride	5	U
108-05-4	Vinyl Acetate	10	U
75-27-4	Bromodichloromethane	5	U
78-87-5	1,2-Dichloropropane	5	U
10061-01-5	cis-1,3-Dichloropropene	5	U
79-01-6	Trichloroethene	5	U
124-48-1	Dibromochloromethane	5	U
79-00-5	1,1,2-Trichloroethane	5	U
71-43-2	Benzene	5	U
10061-02-6	trans-1,3-Dichloropropene	5	U
75-25-2	Bromoform	5	U
108-10-1	4-Methyl-2-Pentanone	10	U
591-78-6	2-Hexanone	10	U
127-18-4	Tetrachloroethene	5	U
79-34-5	1,1,2,2-Tetrachloroethane	5	U
108-88-3	Toluene	5	U
108-90-7	Chlorobenzene	5	U
100-41-4	Ethylbenzene	5	U
100-42-5	Styrene	5	U
1330-20-7	Xylene (total)	5	U

1E

VOLATILE ORGANICS ANALYSIS DATA SHEET
TENTATIVELY IDENTIFIED COMPOUNDS

EPA SAMPLE NO.

VBLKBP

Lab Name: PNELI_____ Contract: Y-PAY-MOR__

Lab Code: PNELI__ Case No.: 4329__ SAS No.: _____ SDG No.: B5-S4_

Matrix: (soil/water) SOIL__ Lab Sample ID: VBLKBP_____

Sample wt/vol: __5.0 (g/mL) G___ Lab File ID: B8840_____

Level: (low/med) LOW___ Date Received: _____

% Moisture: not dec. ____ Date Analyzed: 09/04/92

Column (pack/cap) CAP___ Dilution Factor: 1.0_____

Number TICs found: __1

CONCENTRATION UNITS:
(ug/L or ug/Kg) UG/KG

CAS NUMBER	COMPOUND NAME	RT	EST. CONC.	Q
1. 67630	ISOPROPANOL	3.42	4.0	JN

1A
VOLATILE ORGANICS ANALYSIS DATA SHEET

EPA SAMPLE NO.

VBLKBQ

Lab Name: PNELI Contract: Y-PAY-MOR

Lab Code: PNELI Case No.: 4329 SAS No.: SDG No.: B5-S4

Matrix: (soil/water) SOIL Lab Sample ID: VBLKBQ

Sample wt/vol: 5.0 (g/mL) G Lab File ID: B8852

Level: (low/med) LOW Date Received:

% Moisture: not dec. Date Analyzed: 09/09/92

Column: (pack/cap) CAP Dilution Factor: 1.0

CAS NO.	COMPOUND	CONCENTRATION UNITS: (ug/L or ug/Kg) UG/KG	Q
74-87-3	Chloromethane	10	U
74-83-9	Bromomethane	10	U
75-01-4	Vinyl Chloride	10	U
75-00-3	Chloroethane	10	U
75-09-2	Methylene Chloride	1	J
67-64-1	Acetone	3	J
75-15-0	Carbon Disulfide	5	U
75-35-4	1,1-Dichloroethene	5	U
75-34-3	1,1-Dichloroethane	5	U
156-60-5	trans-1,2-Dichloroethene	5	U
156-59-2	cis-1,2-Dichloroethene	5	U
67-66-3	Chloroform	5	U
107-06-2	1,2-Dichloroethane	5	U
78-93-3	2-Butanone	10	U
71-55-6	1,1,1-Trichloroethane	5	U
56-23-5	Carbon Tetrachloride	5	U
108-05-4	Vinyl Acetate	10	U
75-27-4	Bromodichloromethane	5	U
78-87-5	1,2-Dichloropropane	5	U
10061-01-5	cis-1,3-Dichloropropene	5	U
79-01-6	Trichloroethene	5	U
124-48-1	Dibromochloromethane	5	U
79-00-5	1,1,2-Trichloroethane	5	U
71-43-2	Benzene	5	U
10061-02-6	trans-1,3-Dichloropropene	5	U
75-25-2	Bromoform	5	U
108-10-1	4-Methyl-2-Pentanone	10	U
591-78-6	2-Hexanone	10	U
127-18-4	Tetrachloroethene	5	U
79-34-5	1,1,2,2-Tetrachloroethane	5	U
108-88-3	Toluene	5	U
108-90-7	Chlorobenzene	5	U
100-41-4	Ethylbenzene	5	U
100-42-5	Styrene	5	U
1330-20-7	Xylene (total)	5	U

1E

VOLATILE ORGANICS ANALYSIS DATA SHEET
TENTATIVELY IDENTIFIED COMPOUNDS

EPA SAMPLE NO.

VBLKBQ

Lab Name: PNELI_____ Contract: Y-PAY-MOR__

Lab Code: PNELI__ Case No.: 4329__ SAS No.: _____ SDG No.: B5-S4_

Matrix: (soil/water) SOIL__ Lab Sample ID: VBLKBQ_____

Sample wt/vol: __5.0 (g/mL) G___ Lab File ID: B8852_____

Level: (low/med) LOW___ Date Received: _____

% Moisture: not dec. ____ Date Analyzed: 09/09/92

Column (pack/cap) CAP___ Dilution Factor: 1.0_____

Number TICs found: __0

CONCENTRATION UNITS:
(ug/L or ug/Kg) UG/KG

CAS NUMBER	COMPOUND NAME	RT	EST. CONC.	Q

8A

VOLATILE INTERNAL STANDARD AREA SUMMARY

Lab Name: PNELI_____ Contract: Y-PAY-MOR__ _____

Lab Code: PNELI__ Case No.: 4329__ SAS No.: _____ SDG No.: B5-S4_

Lab File ID (Standard): A1937_____ Date Analyzed: 09/03/92

Instrument ID: HPMSD-A_ Time Analyzed: 1244____

Matrix:(soil/water) SOIL__ Level:(low/med) MED___ Column:(pack/cap) CAP___

		IS1(BCM) AREA #	RT	IS2(DFB) AREA #	RT	IS3(CBZ) AREA #	RT
	12 HOUR STD	73324	3.22	329000	4.75	258589	10.04
	UPPER LIMIT	146648		658000		517178	
	LOWER LIMIT	36662		164500		129294	
	EPA SAMPLE NO.						
01	B10-S1DL	65209	3.21	310187	4.73	241936	10.04
02	B10-S2DL	63591	3.21	279897	4.73	226259	10.04
03	B10-S2MS	64195	3.22	291818	4.73	237049	10.04
04	B10-S2MSD	63826	3.21	304013	4.73	240877	10.03
05	VBLKAR	70035	3.23	311869	4.74	246463	10.04

IS1 (BCM) = Bromochloromethane
IS2 (DFB) = 1,4-Difluorobenzene
IS3 (CBZ) = Chlorobenzene-d5

UPPER LIMIT = + 100%
of internal standard area.
LOWER LIMIT = - 50%
of internal standard area.

Column used to flag internal standard area values with an asterisk

FORM VIII VOA 1/87 Rev.

8A
VOLATILE INTERNAL STANDARD AREA SUMMARY

Lab Name: PNELI_____ Contract: Y-PAY-MOR__ _____

Lab Code: PNELI__ Case No.: 4329__ SAS No.: _____ SDG No.: B5-S4_

Lab File ID (Standard): B8807_____ Date Analyzed: 09/02/92

Instrument ID: HPMSD-B_ Time Analyzed: 1024____

Matrix:(soil/water) SOIL__ Level:(low/med) LOW___ Column:(pack/cap) CAP___

		IS1(BCM) AREA #	RT	IS2(DFB) AREA #	RT	IS3(CBZ) AREA #	RT
	12 HOUR STD	87326	5.16	428308	6.41	343590	10.42
	UPPER LIMIT	174652		856616		687180	
	LOWER LIMIT	43663		214154		171795	
	EPA SAMPLE NO.						
01	B5-S4	72367	5.17	373491	6.43	285942	10.45
02	B6-S2	72551	5.19	358951	6.46	263310	10.48
03	B6-S3	68874	5.20	350398	6.45	266079	10.47
04	B7-S2	69316	5.20	336937	6.47	240629	10.50
05	B7-S3	64676	5.19	320843	6.46	252499	10.48
06	B8-S3	59737	5.19	293496	6.47	228322	10.49
07	B9-S2	55790	5.21	269447	6.48	191717	10.50
08	VBLKBN	84055	5.15	417682	6.42	324075	10.44

IS1 (BCM) = Bromochloromethane
IS2 (DFB) = 1,4-Difluorobenzene
IS3 (CBZ) = Chlorobenzene-d5

UPPER LIMIT = + 100%
of internal standard area.
LOWER LIMIT = - 50%
of internal standard area.

Column used to flag internal standard area values with an asterisk

FORM VIII VOA 1/87 Rev.

8A

VOLATILE INTERNAL STANDARD AREA SUMMARY

Lab Name: PNELI_____ Contract: Y-PAY-MOR__ _____

Lab Code: PNELI__ Case No.: 4329__ SAS No.: _____ SDG No.: B5-S4_

Lab File ID (Standard): B8821_____ Date Analyzed: 09/03/92

Instrument ID: HPMSD-B_ Time Analyzed: 0802____

Matrix:(soil/water) SOIL__ Level:(low/med) LOW___ Column:(pack/cap) CAP___

		IS1(BCM) AREA #	RT	IS2(DFB) AREA #	RT	IS3(CBZ) AREA #	RT
	12 HOUR STD	94330	5.19	425068	6.45	341229	10.46
	UPPER LIMIT	188660		850136		682458	
	LOWER LIMIT	47165		212534		170614	
	EPA SAMPLE NO.						
01	B10-S3	69331	5.19	344198	6.45	266762	10.48
02	B7-S2DL	63275	5.24	301346	6.49	229129	10.52
03	B8-S2	72511	5.20	355760	6.45	251654	10.46
04	B9-S3	71577	5.22	361527	6.48	276119	10.49
05	B5-S8MS	69268	5.20	322901	6.46	257201	10.51
06	B5-S8MSD	60269	5.21	306289	6.47	244145	10.49
07	VBLKBO	83690	5.20	410231	6.45	329015	10.45

IS1 (BCM) = Bromochloromethane
IS2 (DFB) = 1,4-Difluorobenzene
IS3 (CBZ) = Chlorobenzene-d5

UPPER LIMIT = + 100%
of internal standard area.
LOWER LIMIT = - 50%
of internal standard area.

Column used to flag internal standard area values with an asterisk

FORM VIII VOA 1/87 Rev.

8A

VOLATILE INTERNAL STANDARD AREA SUMMARY

Lab Name: PNELI_____ Contract: Y-PAY-MOR__ _____

Lab Code: PNELI__ Case No.: 4329__ SAS No.: _____ SDG No.: B5-S4_

Lab File ID (Standard): B8839_____ Date Analyzed: 09/04/92

Instrument ID: HPMSD-B_ Time Analyzed: 0851____

Matrix:(soil/water) SOIL__ Level:(low/med) LOW___ Column:(pack/cap) CAP___

		IS1(BCM) AREA #	RT	IS2(DFB) AREA #	RT	IS3(CBZ) AREA #	RT
	12 HOUR STD	76729	5.20	334899	6.46	281711	10.48
	UPPER LIMIT	153458		669798		563422	
	LOWER LIMIT	38364		167450		140856	
	EPA SAMPLE NO.						
01	B5-S8	72531	5.19	355069	6.44	268838	10.44
02	VBLKBP	71678	5.17	343236	6.43	273110	10.47

IS1 (BCM) = Bromochloromethane
IS2 (DFB) = 1,4-Difluorobenzene
IS3 (CBZ) = Chlorobenzene-d5

UPPER LIMIT = + 100% of internal standard area.
LOWER LIMIT = - 50% of internal standard area.

Column used to flag internal standard area values with an asterisk

FORM VIII VOA 1/87 Rev.

8A

VOLATILE INTERNAL STANDARD AREA SUMMARY

Lab Name: PNELI_____ Contract: Y-PAY-MOR__ _____

Lab Code: PNELI__ Case No.: 4329__ SAS No.: _____ SDG No.: B5-S4_

Lab File ID (Standard): B8851_____ Date Analyzed: 09/09/92

Instrument ID: HPMSD-B_ Time Analyzed: 0852____

Matrix:(soil/water) SOIL__ Level:(low/med) LOW___ Column:(pack/cap) CAP___

		IS1(BCM) AREA #	RT	IS2(DFB) AREA #	RT	IS3(CBZ) AREA #	RT
	12 HOUR STD	87536	5.18	422586	6.44	338024	10.48
	UPPER LIMIT	175072		845172		676048	
	LOWER LIMIT	43768		211293		169012	
	EPA SAMPLE NO.						
01	B10-S1	79415	5.21	438338	6.46	331487	10.45
02	B10-S2	82342	5.21	441777	6.46	326970	10.49
03	VBLKBQ	85406	5.17	407153	6.41	322195	10.44

IS1 (BCM) = Bromochloromethane
IS2 (DFB) = 1,4-Difluorobenzene
IS3 (CBZ) = Chlorobenzene-d5

UPPER LIMIT = + 100%
of internal standard area.
LOWER LIMIT = - 50%
of internal standard area.

Column used to flag internal standard area values with an asterisk

FORM VIII VOA 1/87 Rev.

1A

VOLATILE ORGANICS ANALYSIS DATA SHEET

EPA SAMPLE NO.

B11_S-3

Lab Name: PNELI_____ Contract: Y-PAY-MOR__

Lab Code: PNELI__ Case No.: 4518__ SAS No.: _____ SDG No.: B11_S-

Matrix: (soil/water) SOIL__ Lab Sample ID: 4518-01_____

Sample wt/vol: __5.0 (g/mL) G___ Lab File ID: B9360_____

Level: (low/med) LOW___ Date Received: 10/27/92

% Moisture: not dec. __15 Date Analyzed: 11/02/92

Column: (pack/cap) CAP___ Dilution Factor: 1.0_____

CAS NO.	COMPOUND	CONCENTRATION UNITS: (ug/L or ug/Kg) UG/KG	Q
74-87-3	Chloromethane	12	U
74-83-9	Bromomethane	12	U
75-01-4	Vinyl Chloride	12	U
75-00-3	Chloroethane	12	U
75-09-2	Methylene Chloride	2	J
67-64-1	Acetone	53	
75-15-0	Carbon Disulfide	6	U
75-35-4	1,1-Dichloroethene	6	U
75-34-3	1,1-Dichloroethane	6	U
156-60-5	trans-1,2-Dichloroethene	6	U
156-59-2	cis-1,2-Dichloroethene	6	U
67-66-3	Chloroform	6	U
107-06-2	1,2-Dichloroethane	6	U
78-93-3	2-Butanone	12	U
71-55-6	1,1,1-Trichloroethane	6	U
56-23-5	Carbon Tetrachloride	6	U
108-05-4	Vinyl Acetate	12	U
75-27-4	Bromodichloromethane	6	U
78-87-5	1,2-Dichloropropane	6	U
10061-01-5	cis-1,3-Dichloropropene	6	U
79-01-6	Trichloroethene	6	U
124-48-1	Dibromochloromethane	6	U
79-00-5	1,1,2-Trichloroethane	6	U
71-43-2	Benzene	6	U
10061-02-6	trans-1,3-Dichloropropene	6	U
75-25-2	Bromoform	6	U
108-10-1	4-Methyl-2-Pentanone	12	U
591-78-6	2-Hexanone	12	U
127-18-4	Tetrachloroethene	6	U
79-34-5	1,1,2,2-Tetrachloroethane	6	U
108-88-3	Toluene	6	U
108-90-7	Chlorobenzene	6	U
100-41-4	Ethylbenzene	6	U
100-42-5	Styrene	6	U
1330-20-7	Xylene (total)	6	U

1E

VOLATILE ORGANICS ANALYSIS DATA SHEET
TENTATIVELY IDENTIFIED COMPOUNDS

EPA SAMPLE NO.

B11_S-3

Lab Name: PNELI_____ Contract: Y-PAY-MOR__

Lab Code: PNELI__ Case No.: 4518__ SAS No.: _____ SDG No.: B11_S-

Matrix: (soil/water) SOIL__ Lab Sample ID: 4518-01_____

Sample wt/vol: __5.0 (g/mL) G___ Lab File ID: B9360_____

Level: (low/med) LOW___ Date Received: 10/27/92

% Moisture: not dec. __15 Date Analyzed: 11/02/92

Column (pack/cap) CAP___ Dilution Factor: 1.0_____

Number TICs found: __0

CONCENTRATION UNITS:
(ug/L or ug/Kg) UG/KG

CAS NUMBER	COMPOUND NAME	RT	EST. CONC.	Q

1A

VOLATILE ORGANICS ANALYSIS DATA SHEET

EPA SAMPLE NO.

B11_S-5

Lab Name: PNELI_____ Contract: Y-PAY-MOR__

Lab Code: PNELI__ Case No.: 4518__ SAS No.: _____ SDG No.: B11_S-

Matrix: (soil/water) SOIL__ Lab Sample ID: 4518-02_____

Sample wt/vol: __5.0 (g/mL) G___ Lab File ID: B9342_____

Level: (low/med) LOW___ Date Received: 10/27/92

% Moisture: not dec. __10 Date Analyzed: 10/30/92

Column: (pack/cap) CAP___ Dilution Factor: 1.0_____

CAS NO.	COMPOUND	CONCENTRATION UNITS: (ug/L or ug/Kg) UG/KG	Q
74-87-3	Chloromethane	11	U
74-83-9	Bromomethane	11	U
75-01-4	Vinyl Chloride	11	U
75-00-3	Chloroethane	11	U
75-09-2	Methylene Chloride	6	U
67-64-1	Acetone	11	U
75-15-0	Carbon Disulfide	6	U
75-35-4	1,1-Dichloroethene	6	U
75-34-3	1,1-Dichloroethane	6	U
156-60-5	trans-1,2-Dichloroethene	6	U
156-59-2	cis-1,2-Dichloroethene	6	U
67-66-3	Chloroform	6	U
107-06-2	1,2-Dichloroethane	6	U
78-93-3	2-Butanone	11	U
71-55-6	1,1,1-Trichloroethane	6	U
56-23-5	Carbon Tetrachloride	6	U
108-05-4	Vinyl Acetate	11	U
75-27-4	Bromodichloromethane	6	U
78-87-5	1,2-Dichloropropane	6	U
10061-01-5	cis-1,3-Dichloropropene	6	U
79-01-6	Trichloroethene	6	U
124-48-1	Dibromochloromethane	6	U
79-00-5	1,1,2-Trichloroethane	6	U
71-43-2	Benzene	6	U
10061-02-6	trans-1,3-Dichloropropene	6	U
75-25-2	Bromoform	6	U
108-10-1	4-Methyl-2-Pentanone	11	U
591-78-6	2-Hexanone	11	U
127-18-4	Tetrachloroethene	6	U
79-34-5	1,1,2,2-Tetrachloroethane	6	U
108-88-3	Toluene	6	U
108-90-7	Chlorobenzene	6	U
100-41-4	Ethylbenzene	6	U
100-42-5	Styrene	6	U
1330-20-7	Xylene (total)	6	U

1E

VOLATILE ORGANICS ANALYSIS DATA SHEET
TENTATIVELY IDENTIFIED COMPOUNDS

EPA SAMPLE NO.

B11_S-5

Lab Name: PNELI_____ Contract: Y-PAY-MOR__

Lab Code: PNELI__ Case No.: 4518__ SAS No.: _____ SDG No.: B11_S-

Matrix: (soil/water) SOIL__ Lab Sample ID: 4518-02_____

Sample wt/vol: __5.0 (g/mL) G___ Lab File ID: B9342_____

Level: (low/med) LOW___ Date Received: 10/27/92

% Moisture: not dec. __10 Date Analyzed: 10/30/92

Column (pack/cap) CAP___ Dilution Factor: 1.0_____

Number TICs found: __0

CONCENTRATION UNITS:
(ug/L or ug/Kg) UG/KG

CAS NUMBER	COMPOUND NAME	RT	EST. CONC.	Q

1A

VOLATILE ORGANICS ANALYSIS DATA SHEET

EPA SAMPLE NO.

B11_S-6

Lab Name: PNELI_____ Contract: Y-PAY-MOR__

Lab Code: PNELI__ Case No.: 4518__ SAS No.: _____ SDG No.: B11_S-

Matrix: (soil/water) SOIL__ Lab Sample ID: 4518-06_____

Sample wt/vol: __5.0 (g/mL) G___ Lab File ID: B9343_____

Level: (low/med) LOW___ Date Received: 10/27/92

% Moisture: not dec. __12 Date Analyzed: 10/30/92

Column: (pack/cap) CAP___ Dilution Factor: 1.0_____

CAS NO.	COMPOUND	CONCENTRATION UNITS: (ug/L or ug/Kg) UG/KG	Q
74-87-3	Chloromethane	11	U
74-83-9	Bromomethane	11	U
75-01-4	Vinyl Chloride	11	U
75-00-3	Chloroethane	11	U
75-09-2	Methylene Chloride	5	J
67-64-1	Acetone	11	U
75-15-0	Carbon Disulfide	6	U
75-35-4	1,1-Dichloroethene	6	U
75-34-3	1,1-Dichloroethane	6	U
156-60-5	trans-1,2-Dichloroethene	6	U
156-59-2	cis-1,2-Dichloroethene	6	U
67-66-3	Chloroform	6	U
107-06-2	1,2-Dichloroethane	6	U
78-93-3	2-Butanone	11	U
71-55-6	1,1,1-Trichloroethane	6	U
56-23-5	Carbon Tetrachloride	6	U
108-05-4	Vinyl Acetate	11	U
75-27-4	Bromodichloromethane	6	U
78-87-5	1,2-Dichloropropane	6	U
10061-01-5	cis-1,3-Dichloropropene	6	U
79-01-6	Trichloroethene	6	U
124-48-1	Dibromochloromethane	6	U
79-00-5	1,1,2-Trichloroethane	6	U
71-43-2	Benzene	6	U
10061-02-6	trans-1,3-Dichloropropene	6	U
75-25-2	Bromoform	6	U
108-10-1	4-Methyl-2-Pentanone	11	U
591-78-6	2-Hexanone	11	U
127-18-4	Tetrachloroethene	6	U
79-34-5	1,1,2,2-Tetrachloroethane	6	U
108-88-3	Toluene	6	U
108-90-7	Chlorobenzene	6	U
100-41-4	Ethylbenzene	6	U
100-42-5	Styrene	6	U
1330-20-7	Xylene (total)	6	U

1E

VOLATILE ORGANICS ANALYSIS DATA SHEET
TENTATIVELY IDENTIFIED COMPOUNDS

EPA SAMPLE NO.

B11_S-6

Lab Name: PNELI_____ Contract: Y-PAY-MOR__

Lab Code: PNELI__ Case No.: 4518__ SAS No.: _____ SDG No.: B11_S-

Matrix: (soil/water) SOIL__ Lab Sample ID: 4518-06_____

Sample wt/vol: __5.0 (g/mL) G___ Lab File ID: B9343_____

Level: (low/med) LOW___ Date Received: 10/27/92

% Moisture: not dec. __12 Date Analyzed: 10/30/92

Column (pack/cap) CAP___ Dilution Factor: 1.0_____

Number TICs found: __0

CONCENTRATION UNITS:
(ug/L or ug/Kg) UG/KG

CAS NUMBER	COMPOUND NAME	RT	EST. CONC.	Q

1A

VOLATILE ORGANICS ANALYSIS DATA SHEET

EPA SAMPLE NO.

B12_H2O

Lab Name: PNELI_____ Contract: Y-PAY-MOR__

Lab Code: PNELI__ Case No.: 4518__ SAS No.: _____ SDG No.: B11_S-

Matrix: (soil/water) WATER_ Lab Sample ID: 4518-13_____

Sample wt/vol: __5.0 (g/mL) ML__ Lab File ID: A2513_____

Level: (low/med) LOW___ Date Received: 10/27/92

% Moisture: not dec. ____ Date Analyzed: 10/30/92

Column: (pack/cap) CAP___ Dilution Factor: 1.0_____

CAS NO.	COMPOUND	CONCENTRATION UNITS: (ug/L or ug/Kg) UG/L_	Q
74-87-3	Chloromethane	10	U
74-83-9	Bromomethane	10	U
75-01-4	Vinyl Chloride	10	U
75-00-3	Chloroethane	10	U
75-09-2	Methylene Chloride	2	J
67-64-1	Acetone	19	
75-15-0	Carbon Disulfide	5	U
75-35-4	1,1-Dichloroethene	5	U
75-34-3	1,1-Dichloroethane	5	U
156-60-5	trans-1,2-Dichloroethene	5	U
156-59-2	cis-1,2-Dichloroethene	29	
67-66-3	Chloroform	5	U
107-06-2	1,2-Dichloroethane	5	U
78-93-3	2-Butanone	2	J
71-55-6	1,1,1-Trichloroethane	5	U
56-23-5	Carbon Tetrachloride	5	U
108-05-4	Vinyl Acetate	10	U
75-27-4	Bromodichloromethane	5	U
78-87-5	1,2-Dichloropropane	5	U
10061-01-5	cis-1,3-Dichloropropene	5	U
79-01-6	Trichloroethene	4	J
124-48-1	Dibromochloromethane	5	U
79-00-5	1,1,2-Trichloroethane	5	U
71-43-2	Benzene	5	U
10061-02-6	trans-1,3-Dichloropropene	5	U
75-25-2	Bromoform	5	U
108-10-1	4-Methyl-2-Pentanone	10	U
591-78-6	2-Hexanone	10	U
127-18-4	Tetrachloroethene	780	E
79-34-5	1,1,2,2-Tetrachloroethane	5	U
108-88-3	Toluene	5	U
108-90-7	Chlorobenzene	5	U
100-41-4	Ethylbenzene	5	U
100-42-5	Styrene	5	U
1330-20-7	Xylene (total)	5	U

1E

VOLATILE ORGANICS ANALYSIS DATA SHEET
TENTATIVELY IDENTIFIED COMPOUNDS

EPA SAMPLE NO.

B12_H2O

Lab Name: PNELI_____ Contract: Y-PAY-MOR__

Lab Code: PNELI__ Case No.: 4518__ SAS No.: _____ SDG No.: B11_S-

Matrix: (soil/water) WATER_ Lab Sample ID: 4518-13_____

Sample wt/vol: __5.0 (g/mL) ML__ Lab File ID: A2513_____

Level: (low/med) LOW___ Date Received: 10/27/92

% Moisture: not dec. ____ Date Analyzed: 10/30/92

Column (pack/cap) CAP___ Dilution Factor: 1.0_____

CONCENTRATION UNITS:
(ug/L or ug/Kg) UG/L_

Number TICs found: __1

CAS NUMBER	COMPOUND NAME	RT	EST. CONC.	Q
1.	Unknown C4-alkylbenzene	14.89	6.0	JN

1A

VOLATILE ORGANICS ANALYSIS DATA SHEET

EPA SAMPLE NO.

B12_H2ODL

Lab Name: PNELI_____ Contract: Y-PAY-MOR__

Lab Code: PNELI__ Case No.: 4518__ SAS No.: _____ SDG No.: B11_S-

Matrix: (soil/water) WATER_ Lab Sample ID: 4518-13DL____

Sample wt/vol: __5.0 (g/mL) ML__ Lab File ID: A2526_____

Level: (low/med) LOW___ Date Received: 10/27/92

% Moisture: not dec. ____ Date Analyzed: 11/02/92

Column: (pack/cap) CAP___ Dilution Factor: 50_____

CAS NO.	COMPOUND	CONCENTRATION UNITS: (ug/L or ug/Kg) UG/L_	Q
74-87-3	Chloromethane	500	U
74-83-9	Bromomethane	500	U
75-01-4	Vinyl Chloride	500	U
75-00-3	Chloroethane	500	U
75-09-2	Methylene Chloride	250	U
67-64-1	Acetone	500	U
75-15-0	Carbon Disulfide	250	U
75-35-4	1,1-Dichloroethene	250	U
75-34-3	1,1-Dichloroethane	250	U
156-60-5	trans-1,2-Dichloroethene	250	U
156-59-2	cis-1,2-Dichloroethene	250	U
67-66-3	Chloroform	250	U
107-06-2	1,2-Dichloroethane	250	U
78-93-3	2-Butanone	500	U
71-55-6	1,1,1-Trichloroethane	250	U
56-23-5	Carbon Tetrachloride	250	U
108-05-4	Vinyl Acetate	500	U
75-27-4	Bromodichloromethane	250	U
78-87-5	1,2-Dichloropropane	250	U
10061-01-5	cis-1,3-Dichloropropene	250	U
79-01-6	Trichloroethene	250	U
124-48-1	Dibromochloromethane	250	U
79-00-5	1,1,2-Trichloroethane	250	U
71-43-2	Benzene	250	U
10061-02-6	trans-1,3-Dichloropropene	250	U
75-25-2	Bromoform	250	U
108-10-1	4-Methyl-2-Pentanone	500	U
591-78-6	2-Hexanone	500	U
127-18-4	Tetrachloroethene	1200	D
79-34-5	1,1,2,2-Tetrachloroethane	250	U
108-88-3	Toluene	250	U
108-90-7	Chlorobenzene	250	U
100-41-4	Ethylbenzene	250	U
100-42-5	Styrene	250	U
1330-20-7	Xylene (total)	250	U

1E

VOLATILE ORGANICS ANALYSIS DATA SHEET
TENTATIVELY IDENTIFIED COMPOUNDS

EPA SAMPLE NO.

B12_H2ODL

Lab Name: PNELI_____ Contract: Y-PAY-MOR__

Lab Code: PNELI__ Case No.: 4518__ SAS No.: _____ SDG No.: B11_S-

Matrix: (soil/water) WATER_ Lab Sample ID: 4518-13DL____

Sample wt/vol: __5.0 (g/mL) ML__ Lab File ID: A2526_____

Level: (low/med) LOW___ Date Received: 10/27/92

% Moisture: not dec. ____ Date Analyzed: 11/02/92

Column (pack/cap) CAP___ Dilution Factor: 50_____

CONCENTRATION UNITS:
(ug/L or ug/Kg) UG/L_

Number TICs found: __0

CAS NUMBER	COMPOUND NAME	RT	EST. CONC.	Q

1A

VOLATILE ORGANICS ANALYSIS DATA SHEET

EPA SAMPLE NO.

B12_S-1

Lab Name: PNELI_____ Contract: Y-PAY-MOR__

Lab Code: PNELI__ Case No.: 4518__ SAS No.: _____ SDG No.: B11_S-

Matrix: (soil/water) SOIL__ Lab Sample ID: 4518-07_____

Sample wt/vol: __4.0 (g/mL) G___ Lab File ID: A2520_____

Level: (low/med) MED___ Date Received: 10/27/92

% Moisture: not dec. ___9 Date Analyzed: 11/02/92

Column: (pack/cap) CAP___ Dilution Factor: 10_____

CAS NO.	COMPOUND	CONCENTRATION UNITS: (ug/L or ug/Kg) UG/KG	Q
74-87-3	Chloromethane	14000	U
74-83-9	Bromomethane	14000	U
75-01-4	Vinyl Chloride	14000	U
75-00-3	Chloroethane	14000	U
75-09-2	Methylene Chloride	6900	U
67-64-1	Acetone	14000	U
75-15-0	Carbon Disulfide	6900	U
75-35-4	1,1-Dichloroethene	6900	U
75-34-3	1,1-Dichloroethane	6900	U
156-60-5	trans-1,2-Dichloroethene	6900	U
156-59-2	cis-1,2-Dichloroethene	6900	U
67-66-3	Chloroform	6900	U
107-06-2	1,2-Dichloroethane	6900	U
78-93-3	2-Butanone	14000	U
71-55-6	1,1,1-Trichloroethane	6900	U
56-23-5	Carbon Tetrachloride	6900	U
108-05-4	Vinyl Acetate	14000	U
75-27-4	Bromodichloromethane	6900	U
78-87-5	1,2-Dichloropropane	6900	U
10061-01-5	cis-1,3-Dichloropropene	6900	U
79-01-6	Trichloroethene	6900	U
124-48-1	Dibromochloromethane	6900	U
79-00-5	1,1,2-Trichloroethane	6900	U
71-43-2	Benzene	6900	U
10061-02-6	trans-1,3-Dichloropropene	6900	U
75-25-2	Bromoform	6900	U
108-10-1	4-Methyl-2-Pentanone	14000	U
591-78-6	2-Hexanone	14000	U
127-18-4	Tetrachloroethene	1700000	E
79-34-5	1,1,2,2-Tetrachloroethane	6900	U
108-88-3	Toluene	6900	U
108-90-7	Chlorobenzene	6900	U
100-41-4	Ethylbenzene	6900	U
100-42-5	Styrene	6900	U
1330-20-7	Xylene (total)	6900	U

1E

VOLATILE ORGANICS ANALYSIS DATA SHEET
TENTATIVELY IDENTIFIED COMPOUNDS

EPA SAMPLE NO.

B12_S-1

Lab Name: PNELI_____ Contract: Y-PAY-MOR__

Lab Code: PNELI__ Case No.: 4518__ SAS No.: _____ SDG No.: B11_S-

Matrix: (soil/water) SOIL__ Lab Sample ID: 4518-07_____

Sample wt/vol: __4.0 (g/mL) G___ Lab File ID: A2520_____

Level: (low/med) MED___ Date Received: 10/27/92

% Moisture: not dec. ___9 Date Analyzed: 11/02/92

Column (pack/cap) CAP___ Dilution Factor: 10_____

CONCENTRATION UNITS:
(ug/L or ug/Kg) UG/KG

Number TICs found: __0

CAS NUMBER	COMPOUND NAME	RT	EST. CONC.	Q

1A

VOLATILE ORGANICS ANALYSIS DATA SHEET

EPA SAMPLE NO.

B12_S-1DL

Lab Name: PNELI_____ Contract: Y-PAY-MOR__

Lab Code: PNELI__ Case No.: 4518__ SAS No.: _____ SDG No.: B11_S-

Matrix: (soil/water) SOIL__ Lab Sample ID: 4518-07DL____

Sample wt/vol: __4.0 (g/mL) G___ Lab File ID: A2524_____

Level: (low/med) MED___ Date Received: 10/27/92

% Moisture: not dec. ___9 Date Analyzed: 11/02/92

Column: (pack/cap) CAP___ Dilution Factor: 1000____

CAS NO.	COMPOUND	CONCENTRATION UNITS: (ug/L or ug/Kg) UG/KG	Q
74-87-3	Chloromethane	1400000	U
74-83-9	Bromomethane	1400000	U
75-01-4	Vinyl Chloride	1400000	U
75-00-3	Chloroethane	1400000	U
75-09-2	Methylene Chloride	690000	U
67-64-1	Acetone	1400000	U
75-15-0	Carbon Disulfide	690000	U
75-35-4	1,1-Dichloroethene	690000	U
75-34-3	1,1-Dichloroethane	690000	U
156-60-5	trans-1,2-Dichloroethene	690000	U
156-59-2	cis-1,2-Dichloroethene	690000	U
67-66-3	Chloroform	690000	U
107-06-2	1,2-Dichloroethane	690000	U
78-93-3	2-Butanone	1400000	U
71-55-6	1,1,1-Trichloroethane	690000	U
56-23-5	Carbon Tetrachloride	690000	U
108-05-4	Vinyl Acetate	1400000	U
75-27-4	Bromodichloromethane	690000	U
78-87-5	1,2-Dichloropropane	690000	U
10061-01-5	cis-1,3-Dichloropropene	690000	U
79-01-6	Trichloroethene	690000	U
124-48-1	Dibromochloromethane	690000	U
79-00-5	1,1,2-Trichloroethane	690000	U
71-43-2	Benzene	690000	U
10061-02-6	trans-1,3-Dichloropropene	690000	U
75-25-2	Bromoform	690000	U
108-10-1	4-Methyl-2-Pentanone	1400000	U
591-78-6	2-Hexanone	1400000	U
127-18-4	Tetrachloroethene	7200000	D
79-34-5	1,1,2,2-Tetrachloroethane	690000	U
108-88-3	Toluene	690000	U
108-90-7	Chlorobenzene	690000	U
100-41-4	Ethylbenzene	690000	U
100-42-5	Styrene	690000	U
1330-20-7	Xylene (total)	690000	U

1E

VOLATILE ORGANICS ANALYSIS DATA SHEET
TENTATIVELY IDENTIFIED COMPOUNDS

EPA SAMPLE NO.

B12_S-1DL

Lab Name: PNELI_____ Contract: Y-PAY-MOR__

Lab Code: PNELI__ Case No.: 4518__ SAS No.: _____ SDG No.: B11_S-

Matrix: (soil/water) SOIL__ Lab Sample ID: 4518-07DL____

Sample wt/vol: __4.0 (g/mL) G___ Lab File ID: A2524_____

Level: (low/med) MED___ Date Received: 10/27/92

% Moisture: not dec. ___9 Date Analyzed: 11/02/92

Column (pack/cap) CAP___ Dilution Factor: 1000____

Number TICs found: __0

CONCENTRATION UNITS:
(ug/L or ug/Kg) UG/KG

CAS NUMBER	COMPOUND NAME	RT	EST. CONC.	Q

1A

VOLATILE ORGANICS ANALYSIS DATA SHEET

EPA SAMPLE NO.

B12_S-2

Lab Name: PNELI_____ Contract: Y-PAY-MOR__

Lab Code: PNELI__ Case No.: 4518__ SAS No.: _____ SDG No.: B11_S-

Matrix: (soil/water) SOIL__ Lab Sample ID: 4518-08_____

Sample wt/vol: __4.0 (g/mL) G___ Lab File ID: A2519_____

Level: (low/med) MED___ Date Received: 10/27/92

% Moisture: not dec. __12 Date Analyzed: 11/02/92

Column: (pack/cap) CAP___ Dilution Factor: 1.0_____

CAS NO.	COMPOUND	CONCENTRATION UNITS: (ug/L or ug/Kg) UG/KG	Q
74-87-3	Chloromethane	1400	U
74-83-9	Bromomethane	1400	U
75-01-4	Vinyl Chloride	1400	U
75-00-3	Chloroethane	1400	U
75-09-2	Methylene Chloride	180	BJ
67-64-1	Acetone	1400	U
75-15-0	Carbon Disulfide	710	U
75-35-4	1,1-Dichloroethene	710	U
75-34-3	1,1-Dichloroethane	710	U
156-60-5	trans-1,2-Dichloroethene	710	U
156-59-2	cis-1,2-Dichloroethene	260	J
67-66-3	Chloroform	710	U
107-06-2	1,2-Dichloroethane	710	U
78-93-3	2-Butanone	1200	J
71-55-6	1,1,1-Trichloroethane	710	U
56-23-5	Carbon Tetrachloride	710	U
108-05-4	Vinyl Acetate	1400	U
75-27-4	Bromodichloromethane	710	U
78-87-5	1,2-Dichloropropane	710	U
10061-01-5	cis-1,3-Dichloropropene	710	U
79-01-6	Trichloroethene	710	U
124-48-1	Dibromochloromethane	710	U
79-00-5	1,1,2-Trichloroethane	710	U
71-43-2	Benzene	710	U
10061-02-6	trans-1,3-Dichloropropene	710	U
75-25-2	Bromoform	710	U
108-10-1	4-Methyl-2-Pentanone	1400	U
591-78-6	2-Hexanone	1400	U
127-18-4	Tetrachloroethene	11000	
79-34-5	1,1,2,2-Tetrachloroethane	710	U
108-88-3	Toluene	710	U
108-90-7	Chlorobenzene	710	U
100-41-4	Ethylbenzene	710	U
100-42-5	Styrene	710	U
1330-20-7	Xylene (total)	710	U

1E

VOLATILE ORGANICS ANALYSIS DATA SHEET
TENTATIVELY IDENTIFIED COMPOUNDS

EPA SAMPLE NO.

B12_S-2

Lab Name: PNELI_____ Contract: Y-PAY-MOR__

Lab Code: PNELI__ Case No.: 4518__ SAS No.: _____ SDG No.: B11_S-

Matrix: (soil/water) SOIL__ Lab Sample ID: 4518-08_____

Sample wt/vol: __4.0 (g/mL) G___ Lab File ID: A2519_____

Level: (low/med) MED___ Date Received: 10/27/92

% Moisture: not dec. __12 Date Analyzed: 11/02/92

Column (pack/cap) CAP___ Dilution Factor: 1.0_____

Number TICs found: __0

CONCENTRATION UNITS:
(ug/L or ug/Kg) UG/KG

CAS NUMBER	COMPOUND NAME	RT	EST. CONC.	Q

1A

VOLATILE ORGANICS ANALYSIS DATA SHEET

EPA SAMPLE NO.

B12_S-3

Lab Name: PNELI_____ Contract: Y-PAY-MOR__

Lab Code: PNELI__ Case No.: 4518__ SAS No.: _____ SDG No.: B11_S-

Matrix: (soil/water) SOIL__ Lab Sample ID: 4518-09_____

Sample wt/vol: __5.0 (g/mL) G___ Lab File ID: B9344_____

Level: (low/med) LOW___ Date Received: 10/27/92

% Moisture: not dec. ___9 Date Analyzed: 10/30/92

Column: (pack/cap) CAP___ Dilution Factor: 1.0_____

CAS NO.	COMPOUND	CONCENTRATION UNITS: (ug/L or ug/Kg) UG/KG	Q
74-87-3	Chloromethane	11	U
74-83-9	Bromomethane	11	U
75-01-4	Vinyl Chloride	11	U
75-00-3	Chloroethane	11	U
75-09-2	Methylene Chloride	5	U
67-64-1	Acetone	40	
75-15-0	Carbon Disulfide	5	U
75-35-4	1,1-Dichloroethene	5	U
75-34-3	1,1-Dichloroethane	5	U
156-60-5	trans-1,2-Dichloroethene	5	U
156-59-2	cis-1,2-Dichloroethene	5	U
67-66-3	Chloroform	5	U
107-06-2	1,2-Dichloroethane	5	U
78-93-3	2-Butanone	11	U
71-55-6	1,1,1-Trichloroethane	5	U
56-23-5	Carbon Tetrachloride	5	U
108-05-4	Vinyl Acetate	11	U
75-27-4	Bromodichloromethane	5	U
78-87-5	1,2-Dichloropropane	5	U
10061-01-5	cis-1,3-Dichloropropene	5	U
79-01-6	Trichloroethene	5	U
124-48-1	Dibromochloromethane	5	U
79-00-5	1,1,2-Trichloroethane	5	U
71-43-2	Benzene	5	U
10061-02-6	trans-1,3-Dichloropropene	5	U
75-25-2	Bromoform	5	U
108-10-1	4-Methyl-2-Pentanone	11	U
591-78-6	2-Hexanone	11	U
127-18-4	Tetrachloroethene	7	
79-34-5	1,1,2,2-Tetrachloroethane	5	U
108-88-3	Toluene	5	U
108-90-7	Chlorobenzene	5	U
100-41-4	Ethylbenzene	5	U
100-42-5	Styrene	5	U
1330-20-7	Xylene (total)	5	U

1E

VOLATILE ORGANICS ANALYSIS DATA SHEET
TENTATIVELY IDENTIFIED COMPOUNDS

EPA SAMPLE NO.

B12_S-3

Lab Name: PNELI_____ Contract: Y-PAY-MOR__

Lab Code: PNELI__ Case No.: 4518__ SAS No.: _____ SDG No.: B11_S-

Matrix: (soil/water) SOIL__ Lab Sample ID: 4518-09_____

Sample wt/vol: __5.0 (g/mL) G___ Lab File ID: B9344_____

Level: (low/med) LOW___ Date Received: 10/27/92

% Moisture: not dec. ___9 Date Analyzed: 10/30/92

Column (pack/cap) CAP___ Dilution Factor: 1.0_____

Number TICs found: __0

CONCENTRATION UNITS:
(ug/L or ug/Kg) UG/KG

CAS NUMBER	COMPOUND NAME	RT	EST. CONC.	Q

1A

VOLATILE ORGANICS ANALYSIS DATA SHEET

EPA SAMPLE NO.

B12_S-36

Lab Name: PNELI_____ Contract: Y-PAY-MOR__

Lab Code: PNELI__ Case No.: 4518__ SAS No.: _____ SDG No.: B11_S-

Matrix: (soil/water) SOIL__ Lab Sample ID: 4518-10_____

Sample wt/vol: __5.0 (g/mL) G___ Lab File ID: B9345_____

Level: (low/med) LOW___ Date Received: 10/27/92

% Moisture: not dec. __11 Date Analyzed: 10/30/92

Column: (pack/cap) CAP___ Dilution Factor: 1.0_____

CAS NO.	COMPOUND	CONCENTRATION UNITS: (ug/L or ug/Kg) UG/KG	Q
74-87-3	Chloromethane	11	U
74-83-9	Bromomethane	11	U
75-01-4	Vinyl Chloride	11	U
75-00-3	Chloroethane	11	U
75-09-2	Methylene Chloride	6	U
67-64-1	Acetone	21	
75-15-0	Carbon Disulfide	6	U
75-35-4	1,1-Dichloroethene	6	U
75-34-3	1,1-Dichloroethane	6	U
156-60-5	trans-1,2-Dichloroethene	6	U
156-59-2	cis-1,2-Dichloroethene	6	U
67-66-3	Chloroform	6	U
107-06-2	1,2-Dichloroethane	6	U
78-93-3	2-Butanone	11	U
71-55-6	1,1,1-Trichloroethane	6	U
56-23-5	Carbon Tetrachloride	6	U
108-05-4	Vinyl Acetate	11	U
75-27-4	Bromodichloromethane	6	U
78-87-5	1,2-Dichloropropane	6	U
10061-01-5	cis-1,3-Dichloropropene	6	U
79-01-6	Trichloroethene	6	U
124-48-1	Dibromochloromethane	6	U
79-00-5	1,1,2-Trichloroethane	6	U
71-43-2	Benzene	6	U
10061-02-6	trans-1,3-Dichloropropene	6	U
75-25-2	Bromoform	6	U
108-10-1	4-Methyl-2-Pentanone	11	U
591-78-6	2-Hexanone	11	U
127-18-4	Tetrachloroethene	1200	E
79-34-5	1,1,2,2-Tetrachloroethane	6	U
108-88-3	Toluene	6	U
108-90-7	Chlorobenzene	6	U
100-41-4	Ethylbenzene	6	U
100-42-5	Styrene	6	U
1330-20-7	Xylene (total)	6	U

1E

VOLATILE ORGANICS ANALYSIS DATA SHEET
TENTATIVELY IDENTIFIED COMPOUNDS

EPA SAMPLE NO.

B12_S-36

Lab Name: PNELI_____ Contract: Y-PAY-MOR__

Lab Code: PNELI__ Case No.: 4518__ SAS No.: _____ SDG No.: B11_S-

Matrix: (soil/water) SOIL__ Lab Sample ID: 4518-10_____

Sample wt/vol: __5.0 (g/mL) G___ Lab File ID: B9345_____

Level: (low/med) LOW___ Date Received: 10/27/92

% Moisture: not dec. __11 Date Analyzed: 10/30/92

Column (pack/cap) CAP___ Dilution Factor: 1.0_____

Number TICs found: __1

CONCENTRATION UNITS:
(ug/L or ug/Kg) UG/KG

CAS NUMBER	COMPOUND NAME	RT	EST. CONC.	Q
1.	Unknown	12.21	3.4	J

1A

VOLATILE ORGANICS ANALYSIS DATA SHEET

EPA SAMPLE NO.

B12_S-36DL

Lab Name: PNELI_____ Contract: Y-PAY-MOR__

Lab Code: PNELI__ Case No.: 4518__ SAS No.: _____ SDG No.: B11_S-

Matrix: (soil/water) SOIL__ Lab Sample ID: 4518-10DL____

Sample wt/vol: __4.0 (g/mL) G___ Lab File ID: A2523_____

Level: (low/med) MED___ Date Received: 10/27/92

% Moisture: not dec. __11 Date Analyzed: 11/02/92

Column: (pack/cap) CAP___ Dilution Factor: 1.0_____

CAS NO.	COMPOUND	CONCENTRATION UNITS: (ug/L or ug/Kg) UG/KG	Q
74-87-3	Chloromethane	1400	U
74-83-9	Bromomethane	1400	U
75-01-4	Vinyl Chloride	1400	U
75-00-3	Chloroethane	1400	U
75-09-2	Methylene Chloride	310	BDJ
67-64-1	Acetone	1400	U
75-15-0	Carbon Disulfide	700	U
75-35-4	1,1-Dichloroethene	700	U
75-34-3	1,1-Dichloroethane	700	U
156-60-5	trans-1,2-Dichloroethene	700	U
156-59-2	cis-1,2-Dichloroethene	700	U
67-66-3	Chloroform	700	U
107-06-2	1,2-Dichloroethane	700	U
78-93-3	2-Butanone	1100	DJ
71-55-6	1,1,1-Trichloroethane	700	U
56-23-5	Carbon Tetrachloride	700	U
108-05-4	Vinyl Acetate	1400	U
75-27-4	Bromodichloromethane	700	U
78-87-5	1,2-Dichloropropane	700	U
10061-01-5	cis-1,3-Dichloropropene	700	U
79-01-6	Trichloroethene	700	U
124-48-1	Dibromochloromethane	700	U
79-00-5	1,1,2-Trichloroethane	700	U
71-43-2	Benzene	700	U
10061-02-6	trans-1,3-Dichloropropene	700	U
75-25-2	Bromoform	700	U
108-10-1	4-Methyl-2-Pentanone	1400	U
591-78-6	2-Hexanone	1400	U
127-18-4	Tetrachloroethene	1200	D
79-34-5	1,1,2,2-Tetrachloroethane	700	U
108-88-3	Toluene	700	U
108-90-7	Chlorobenzene	700	U
100-41-4	Ethylbenzene	700	U
100-42-5	Styrene	700	U
1330-20-7	Xylene (total)	700	U

1E

VOLATILE ORGANICS ANALYSIS DATA SHEET
TENTATIVELY IDENTIFIED COMPOUNDS

EPA SAMPLE NO.

B12_S-36DL

Lab Name: PNELI_____ Contract: Y-PAY-MOR__

Lab Code: PNELI__ Case No.: 4518__ SAS No.: _____ SDG No.: B11_S-

Matrix: (soil/water) SOIL__ Lab Sample ID: 4518-10DL____

Sample wt/vol: __4.0 (g/mL) G___ Lab File ID: A2523_____

Level: (low/med) MED___ Date Received: 10/27/92

% Moisture: not dec. __11 Date Analyzed: 11/02/92

Column (pack/cap) CAP___ Dilution Factor: 1.0_____

Number TICs found: __0

CONCENTRATION UNITS:
(ug/L or ug/Kg) UG/KG

CAS NUMBER	COMPOUND NAME	RT	EST. CONC.	Q

1A

VOLATILE ORGANICS ANALYSIS DATA SHEET

EPA SAMPLE NO.

B12_S-4

Lab Name: PNELI_____ Contract: Y-PAY-MOR__

Lab Code: PNELI__ Case No.: 4518__ SAS No.: _____ SDG No.: B11_S-

Matrix: (soil/water) SOIL__ Lab Sample ID: 4518-11_____

Sample wt/vol: __5.0 (g/mL) G___ Lab File ID: B9350_____

Level: (low/med) LOW___ Date Received: 10/27/92

% Moisture: not dec. __11 Date Analyzed: 10/30/92

Column: (pack/cap) CAP___ Dilution Factor: 1.0_____

CAS NO.	COMPOUND	CONCENTRATION UNITS: (ug/L or ug/Kg) UG/KG	Q
74-87-3	Chloromethane	11	U
74-83-9	Bromomethane	11	U
75-01-4	Vinyl Chloride	11	U
75-00-3	Chloroethane	11	U
75-09-2	Methylene Chloride	6	U
67-64-1	Acetone	11	U
75-15-0	Carbon Disulfide	6	U
75-35-4	1,1-Dichloroethene	6	U
75-34-3	1,1-Dichloroethane	6	U
156-60-5	trans-1,2-Dichloroethene	6	U
156-59-2	cis-1,2-Dichloroethene	6	U
67-66-3	Chloroform	6	U
107-06-2	1,2-Dichloroethane	6	U
78-93-3	2-Butanone	11	U
71-55-6	1,1,1-Trichloroethane	6	U
56-23-5	Carbon Tetrachloride	6	U
108-05-4	Vinyl Acetate	11	U
75-27-4	Bromodichloromethane	6	U
78-87-5	1,2-Dichloropropane	6	U
10061-01-5	cis-1,3-Dichloropropene	6	U
79-01-6	Trichloroethene	6	U
124-48-1	Dibromochloromethane	6	U
79-00-5	1,1,2-Trichloroethane	6	U
71-43-2	Benzene	6	U
10061-02-6	trans-1,3-Dichloropropene	6	U
75-25-2	Bromoform	6	U
108-10-1	4-Methyl-2-Pentanone	11	U
591-78-6	2-Hexanone	11	U
127-18-4	Tetrachloroethene	6	U
79-34-5	1,1,2,2-Tetrachloroethane	6	U
108-88-3	Toluene	6	U
108-90-7	Chlorobenzene	6	U
100-41-4	Ethylbenzene	6	U
100-42-5	Styrene	6	U
1330-20-7	Xylene (total)	6	U

1E

VOLATILE ORGANICS ANALYSIS DATA SHEET
TENTATIVELY IDENTIFIED COMPOUNDS

EPA SAMPLE NO.

B12_S-4

Lab Name: PNELI_____ Contract: Y-PAY-MOR__

Lab Code: PNELI__ Case No.: 4518__ SAS No.: _____ SDG No.: B11_S-

Matrix: (soil/water) SOIL__ Lab Sample ID: 4518-11_____

Sample wt/vol: __5.0 (g/mL) G___ Lab File ID: B9350_____

Level: (low/med) LOW___ Date Received: 10/27/92

% Moisture: not dec. __11 Date Analyzed: 10/30/92

Column (pack/cap) CAP___ Dilution Factor: 1.0_____

Number TICs found: __0

CONCENTRATION UNITS:
(ug/L or ug/Kg) UG/KG

CAS NUMBER	COMPOUND NAME	RT	EST. CONC.	Q

1A

VOLATILE ORGANICS ANALYSIS DATA SHEET

EPA SAMPLE NO.

B12_S-5

Lab Name: PNELI_____ Contract: Y-PAY-MOR__

Lab Code: PNELI__ Case No.: 4518__ SAS No.: _____ SDG No.: B11_S-

Matrix: (soil/water) SOIL__ Lab Sample ID: 4518-12_____

Sample wt/vol: __5.0 (g/mL) G___ Lab File ID: B9347_____

Level: (low/med) LOW___ Date Received: 10/27/92

% Moisture: not dec. __10 Date Analyzed: 10/30/92

Column: (pack/cap) CAP___ Dilution Factor: 1.0_____

CAS NO.	COMPOUND	CONCENTRATION UNITS: (ug/L or ug/Kg) UG/KG	Q
74-87-3	Chloromethane	11	U
74-83-9	Bromomethane	11	U
75-01-4	Vinyl Chloride	11	U
75-00-3	Chloroethane	11	U
75-09-2	Methylene Chloride	6	U
67-64-1	Acetone	11	U
75-15-0	Carbon Disulfide	6	U
75-35-4	1,1-Dichloroethene	6	U
75-34-3	1,1-Dichloroethane	6	U
156-60-5	trans-1,2-Dichloroethene	6	U
156-59-2	cis-1,2-Dichloroethene	6	U
67-66-3	Chloroform	6	U
107-06-2	1,2-Dichloroethane	6	U
78-93-3	2-Butanone	11	U
71-55-6	1,1,1-Trichloroethane	6	U
56-23-5	Carbon Tetrachloride	6	U
108-05-4	Vinyl Acetate	11	U
75-27-4	Bromodichloromethane	6	U
78-87-5	1,2-Dichloropropane	6	U
10061-01-5	cis-1,3-Dichloropropene	6	U
79-01-6	Trichloroethene	6	U
124-48-1	Dibromochloromethane	6	U
79-00-5	1,1,2-Trichloroethane	6	U
71-43-2	Benzene	6	U
10061-02-6	trans-1,3-Dichloropropene	6	U
75-25-2	Bromoform	6	U
108-10-1	4-Methyl-2-Pentanone	11	U
591-78-6	2-Hexanone	11	U
127-18-4	Tetrachloroethene	6	U
79-34-5	1,1,2,2-Tetrachloroethane	6	U
108-88-3	Toluene	6	U
108-90-7	Chlorobenzene	6	U
100-41-4	Ethylbenzene	6	U
100-42-5	Styrene	6	U
1330-20-7	Xylene (total)	6	U

1E

VOLATILE ORGANICS ANALYSIS DATA SHEET
TENTATIVELY IDENTIFIED COMPOUNDS

EPA SAMPLE NO.

B12_S-5

Lab Name: PNELI_____ Contract: Y-PAY-MOR__

Lab Code: PNELI__ Case No.: 4518__ SAS No.: _____ SDG No.: B11_S-

Matrix: (soil/water) SOIL__ Lab Sample ID: 4518-12_____

Sample wt/vol: __5.0 (g/mL) G___ Lab File ID: B9347_____

Level: (low/med) LOW___ Date Received: 10/27/92

% Moisture: not dec. __10 Date Analyzed: 10/30/92

Column (pack/cap) CAP___ Dilution Factor: 1.0_____

Number TICs found: __0

CONCENTRATION UNITS:
(ug/L or ug/Kg) UG/KG

CAS NUMBER	COMPOUND NAME	RT	EST. CONC.	Q

NORTH CREEK ANALYTICAL

18939 120th Avenue N.E., Suite 101 • Bothell, WA 98011-2569
Phone (206) 481-9200 • FAX (206) 485-2992

RZA/AGRA	Client Project ID:	Y-PAY-MOR, W-7833-4	Sampled:	Aug 26, 1992
11335 NE 122nd Way, #100	Sample Descript:	Soil, B-7, S-2	Received:	Sep 11, 1992
Kirkland, WA 98034	Analysis Method:	EPA 8240/8260	Analyzed:	Sep 11, 1992
Attention: Dale Kramer	Sample Number:	209-0464	Reported:	Sep 14, 1992

VOLATILE ORGANICS by GC/MS (EPA 8240/8260)

Analyte	Detection Limit mg/kg (ppm)	Sample Results mg/kg (ppm)
Acetone	10	N.D.
Benzene	2.0	N.D.
Bromodichloromethane	2.0	N.D.
Bromoform	2.0	N.D.
Bromomethane	5.0	N.D.
2-Butanone	10	N.D.
Carbon disulfide	5.0	N.D.
Carbon tetrachloride	5.0	N.D.
Chlorobenzene	2.0	N.D.
Chloroethane	2.0	N.D.
2-Chloroethyl vinyl ether	5.0	N.D.
Chloroform	2.0	N.D.
Chloromethane	2.0	N.D.
Dibromochloromethane	5.0	N.D.
1,1-Dichloroethane	2.0	N.D.
1,2-Dichloroethane	2.0	N.D.
1,1-Dichloroethene	2.0	N.D.
cis 1,2-Dichloroethene	2.0	53
trans 1,2-Dichloroethene	2.0	N.D.
1,2-Dichloropropane	2.0	N.D.
cis 1,3-Dichloropropene	2.0	N.D.
trans 1,3-Dichloropropene	2.0	N.D.
Ethylbenzene	2.0	N.D.
2-Hexanone	10	N.D.
Methylene chloride	10	N.D.
4-Methyl-2-pentanone	5.0	N.D.
Styrene	2.0	N.D.
1,1,2,2-Tetrachloroethane	2.0	N.D.
Tetrachloroethene	2.0	74
Toluene	0.1	N.D.
1,1,1-Trichloroethane	2.0	N.D.
1,1,2-Trichloroethane	2.0	N.D.
Trichloroethene	2.0	N.D.
Trichlorofluoromethane	5.0	N.D.
Vinyl chloride	5.0	N.D.
Total Xylenes	2.0	N.D.

Analytes reported as N.D. were not present above the stated limit of detection.

NORTH CREEK ANALYTICAL inc

Steve Mayer
Project Manager

Surrogate Standards Percent Recovery:	
1,2-Dichloroethane-d4	97
Toluene-d8	99
4-Bromofluorobenzene	89

NORTH CREEK ANALYTICAL

18939 120th Avenue N.E., Suite 101 • Bothell, WA 98011-2569
Phone (206) 481-9200 • FAX (206) 485-2992

RZA/AGRA	Client Project ID:	Y-PAY-MOR, W-7833-4	Sampled:	Aug 26, 1992
11335 NE 122nd Way, #100	Sample Descript:	Soil, B-7, S-3	Received:	Sep 11, 1992
Kirkland, WA 98034	Analysis Method:	EPA 8240/8260	Analyzed:	Sep 11, 1992
Attention: Dale Kramer	Sample Number:	209-0465	Reported:	Sep 14, 1992

VOLATILE ORGANICS by GC/MS (EPA 8240/8260)

Analyte	Detection Limit mg/kg (ppm)	Sample Results mg/kg (ppm)
Acetone	10	18
Benzene	2.0	N.D.
Bromodichloromethane	2.0	N.D.
Bromoform	2.0	N.D.
Bromomethane	5.0	N.D.
2-Butanone	10	N.D.
Carbon disulfide	5.0	N.D.
Carbon tetrachloride	5.0	N.D.
Chlorobenzene	2.0	N.D.
Chloroethane	2.0	N.D.
2-Chloroethyl vinyl ether	5.0	N.D.
Chloroform	2.0	N.D.
Chloromethane	2.0	N.D.
Dibromochloromethane	5.0	N.D.
1,1-Dichloroethane	2.0	N.D.
1,2-Dichloroethane	2.0	N.D.
1,1-Dichloroethene	2.0	N.D.
cis 1,2-Dichloroethene	2.0	N.D.
trans 1,2-Dichloroethene	2.0	N.D.
1,2-Dichloropropane	2.0	N.D.
cis 1,3-Dichloropropene	2.0	N.D.
trans 1,3-Dichloropropene	2.0	N.D.
Ethylbenzene	2.0	N.D.
2-Hexanone	10	N.D.
Methylene chloride	10	N.D.
4-Methyl-2-pentanone	5.0	N.D.
Styrene	2.0	N.D.
1,1,2,2-Tetrachloroethane	2.0	N.D.
Tetrachloroethene	2.0	N.D.
Toluene	0.1	N.D.
1,1,1-Trichloroethane	2.0	N.D.
1,1,2-Trichloroethane	2.0	N.D.
Trichloroethene	2.0	N.D.
Trichlorofluoromethane	5.0	N.D.
Vinyl chloride	5.0	N.D.
Total Xylenes	2.0	N.D.

Analytes reported as N.D. were not present above the stated limit of detection.

NORTH CREEK ANALYTICAL inc

Steve Mayer
Project Manager

Surrogate Standards Percent Recovery:	
1,2-Dichloroethane-d4	93
Toluene-d8	99
4-Bromofluorobenzene	92

NORTH CREEK ANALYTICAL

18939 120th Avenue N.E., Suite 101 • Bothell, WA 98011-2569
Phone (206) 481-9200 • FAX (206) 485-2992

RZA/AGRA	Client Project ID:	Y-PAY-MOR, W-7833-4	Sampled:	Aug 26, 1992
11335 NE 122nd Way, #100	Sample Descript:	Soil, B-10, S-2	Received:	Sep 11, 1992
Kirkland, WA 98034	Analysis Method:	EPA 8240/8260	Analyzed:	Sep 11, 1992
Attention: Dale Kramer	Sample Number:	209-0470	Reported:	Sep 14, 1992

VOLATILE ORGANICS by GC/MS (EPA 8240/8260)

Analyte	Detection Limit mg/kg (ppm)	Sample Results mg/kg (ppm)
Acetone	10	N.D.
Benzene	2.0	N.D.
Bromodichloromethane	2.0	N.D.
Bromoform	2.0	N.D.
Bromomethane	5.0	N.D.
2-Butanone	10	N.D.
Carbon disulfide	5.0	N.D.
Carbon tetrachloride	5.0	N.D.
Chlorobenzene	2.0	N.D.
Chloroethane	2.0	N.D.
2-Chloroethyl vinyl ether	5.0	N.D.
Chloroform	2.0	N.D.
Chloromethane	2.0	N.D.
Dibromochloromethane	5.0	N.D.
1,1-Dichloroethane	2.0	N.D.
1,2-Dichloroethane	2.0	N.D.
1,1-Dichloroethene	2.0	N.D.
cis 1,2-Dichloroethene	2.0	11
trans 1,2-Dichloroethene	2.0	N.D.
1,2-Dichloropropane	2.0	N.D.
cis 1,3-Dichloropropene	2.0	N.D.
trans 1,3-Dichloropropene	2.0	N.D.
Ethylbenzene	2.0	N.D.
2-Hexanone	10	N.D.
Methylene chloride	10	N.D.
4-Methyl-2-pentanone	5.0	N.D.
Styrene	2.0	N.D.
1,1,2,2-Tetrachloroethane	2.0	N.D.
Tetrachloroethene	2.0	N.D.
Toluene	0.1	N.D.
1,1,1-Trichloroethane	2.0	N.D.
1,1,2-Trichloroethane	2.0	N.D.
Trichloroethene	2.0	N.D.
Trichlorofluoromethane	5.0	N.D.
Vinyl chloride	5.0	N.D.
Total Xylenes	2.0	N.D.

Analytes reported as N.D. were not present above the stated limit of detection.

NORTH CREEK ANALYTICAL inc

Steve Mayer
Project Manager

Surrogate Standards Percent Recovery:	
1,2-Dichloroethane-d4	71
Toluene-d8	104
4-Bromofluorobenzene	91

NORTH CREEK ANALYTICAL

18939 120th Avenue N.E., Suite 101 • Bothell, WA 98011-2569
Phone (206) 481-9200 • FAX (206) 485-2992

RZA/AGRA	Client Project ID:	Y-PAY-MOR, W-7833-4	Sampled:	Aug 26, 1992
11335 NE 122nd Way, #100	Sample Descript:	Soil, B-10, S-3	Received:	Sep 11, 1992
Kirkland, WA 98034	Analysis Method:	EPA 8240/8260	Analyzed:	Sep 11, 1992
Attention: Dale Kramer	Sample Number:	209-0471	Reported:	Sep 14, 1992

VOLATILE ORGANICS by GC/MS (EPA 8240/8260)

Analyte	Detection Limit mg/kg (ppm)	Sample Results mg/kg (ppm)
Acetone	10	44
Benzene	2.0	N.D.
Bromodichloromethane	2.0	N.D.
Bromoform	2.0	N.D.
Bromomethane	5.0	N.D.
2-Butanone	10	N.D.
Carbon disulfide	5.0	N.D.
Carbon tetrachloride	5.0	N.D.
Chlorobenzene	2.0	N.D.
Chloroethane	2.0	N.D.
2-Chloroethyl vinyl ether	5.0	N.D.
Chloroform	2.0	N.D.
Chloromethane	2.0	N.D.
Dibromochloromethane	5.0	N.D.
1,1-Dichloroethane	2.0	N.D.
1,2-Dichloroethane	2.0	N.D.
1,1-Dichloroethene	2.0	N.D.
cis 1,2-Dichloroethene	2.0	N.D.
trans 1,2-Dichloroethene	2.0	N.D.
1,2-Dichloropropane	2.0	N.D.
cis 1,3-Dichloropropene	2.0	N.D.
trans 1,3-Dichloropropene	2.0	N.D.
Ethylbenzene	2.0	N.D.
2-Hexanone	10	N.D.
Methylene chloride	10	N.D.
4-Methyl-2-pentanone	5.0	N.D.
Styrene	2.0	N.D.
1,1,2,2-Tetrachloroethane	2.0	N.D.
Tetrachloroethene	2.0	N.D.
Toluene	0.1	N.D.
1,1,1-Trichloroethane	2.0	N.D.
1,1,2-Trichloroethane	2.0	N.D.
Trichloroethene	2.0	N.D.
Trichlorofluoromethane	5.0	N.D.
Vinyl chloride	5.0	N.D.
Total Xylenes	2.0	N.D.

Analytes reported as N.D. were not present above the stated limit of detection.

NORTH CREEK ANALYTICAL inc

Steve Mayer
Project Manager

Surrogate Standards Percent Recovery:	
1,2-Dichloroethane-d4	95
Toluene-d8	100
4-Bromofluorobenzene	89

NORTH CREEK ANALYTICAL

18939 120th Avenue N.E., Suite 101 • Bothell, WA 98011-2569
Phone (206) 481-9200 • FAX (206) 485-2992

RZA/AGRA	Client Project ID:	Y-PAY-MOR, W-7833-4		
11335 NE 122nd Way, #100	Sample Descript:	Method Blank		
Kirkland, WA 98034	Analysis Method:	EPA 8240/8260	Analyzed:	Sep 11, 1992
Attention: Dale Kramer	Sample Number:	BLK091192	Reported:	Sep 14, 1992

VOLATILE ORGANICS by GC/MS (EPA 8240/8260)

Analyte	Detection Limit mg/kg (ppm)	Sample Results mg/kg (ppm)
Acetone	10	N.D.
Benzene	2.0	N.D.
Bromodichloromethane	2.0	N.D.
Bromoform	2.0	N.D.
Bromomethane	5.0	N.D.
2-Butanone	10	N.D.
Carbon disulfide	5.0	N.D.
Carbon tetrachloride	5.0	N.D.
Chlorobenzene	2.0	N.D.
Chloroethane	2.0	N.D.
2-Chloroethyl vinyl ether	5.0	N.D.
Chloroform	2.0	N.D.
Chloromethane	2.0	N.D.
Dibromochloromethane	5.0	N.D.
1,1-Dichloroethane	2.0	N.D.
1,2-Dichloroethane	2.0	N.D.
1,1-Dichloroethene	2.0	N.D.
cis 1,2-Dichloroethene	2.0	N.D.
trans 1,2-Dichloroethene	2.0	N.D.
1,2-Dichloropropane	2.0	N.D.
cis 1,3-Dichloropropene	2.0	N.D.
trans 1,3-Dichloropropene	2.0	N.D.
Ethylbenzene	2.0	N.D.
2-Hexanone	10	N.D.
Methylene chloride	10	N.D.
4-Methyl-2-pentanone	5.0	N.D.
Styrene	2.0	N.D.
1,1,2,2-Tetrachloroethane	2.0	N.D.
Tetrachloroethene	2.0	N.D.
Toluene	0.1	N.D.
1,1,1-Trichloroethane	2.0	N.D.
1,1,2-Trichloroethane	2.0	N.D.
Trichloroethene	2.0	N.D.
Trichlorofluoromethane	5.0	N.D.
Vinyl chloride	5.0	N.D.
Total Xylenes	2.0	N.D.

Analytes reported as N.D. were not present above the stated limit of detection.

NORTH CREEK ANALYTICAL inc

Steve Mayer
Project Manager

Surrogate Standards Percent Recovery:	
1,2-Dichloroethane-d4	96
Toluene-d8	98
4-Bromofluorobenzene	91

NORTH CREEK ANALYTICAL

18939 120th Avenue N.E., Suite 101 • Bothell, WA 98011-2569
Phone (206) 481-9200 • FAX (206) 485-2992

RZA/AGRA	Client Project ID: Y-PAY-MOR, W-7833-4	Analyst: J. Kimball
11335 NE 122nd Way, #100	EPA Method: 8240	
Kirkland, WA 98034	Sample Matrix : Soil	
Attention: Dale Kramer	Units: mg/kg (ppm)	Analyzed:
	QC Sample #: BLK	Reported: Sep 14, 1992

QUALITY CONTROL DATA REPORT

ANALYTE	1,1-DCE	Benzene	TCE	Toluene	Chloro-benzene
Sample Conc.:	N.D.	N.D.	N.D.	N.D.	N.D.
Spike Conc. Added:	50	50	50	50	50
Conc. Matrix Spike:	48	51	50	52	53
Matrix Spike % Recovery:	96%	104%	102%	106%	100%
Conc. Matrix Spike Dup.:	47	51	49	49	49
Matrix Spike Duplicate % Recovery:	94%	102%	98%	98%	98%
Relative % Difference:	2.1%	1.9%	4.0%	7.8%	1.9%

NORTH CREEK ANALYTICAL inc

Steve Mayer
Project Manager

% Recovery:	Conc. of M.S. - Conc. of Sample / Spike Conc. Added	x 100
Relative % Difference:	Conc. of M.S. - Conc. of M.S.D. / (Conc. of M.S. + Conc. of M.S.D.) / 2	x 100

FRIEDMAN & BRUYA, INC.

ENVIRONMENTAL CHEMISTS

Date of Report: April 15, 1993
Date Received: April 14, 1993
Project: W-7883-8, Y Pay Mor

RESULTS FROM THE ANALYSIS OF AIR SAMPLES FOR SOIL GASES USING EPA METHODS 8015 (MODIFIED) AND 8010

Results Reported as μg gas/liter volume (ppm)

Sample ID	SVS-5	SVS-6	SVS-7	SVS-8
Analyte:				
Vinyl Chloride	1	<1	<1	<1
cis-Dichloroethylene	1	<1	<1	<1
t-Dichloroethylene	<1	<1	<1	<1
Trichloroethylene	<1	<1	<1	<1
Tetrachloroethylene	<1	<1	7	5
Acetone	<1	<1	<1	<1

FRIEDMAN & BRUYA, INC.

ENVIRONMENTAL CHEMISTS

Date of Report: April 15, 1993
Date Received: April 14, 1993
Project: W-7883-8, Y Pay Mor

RESULTS FROM THE ANALYSIS OF AIR SAMPLES FOR SOIL GASES USING EPA METHODS 8015 (MODIFIED) AND 8010
Results Reported as µg gas/liter volume (ppm)
Quality Assurance

Sample ID	Blank
Analyte:	
Vinyl Chloride	<1
cis-Dichloroethylene	<1
t-Dichloroethylene	<1
Trichloroethylene	<1
Tetrachloroethylene	<1
Acetone	<1

RZA-AGRA
Environmental & Engineering Services
11335 Northeast 122nd Way
Kirkland, Washington 98034-6918
(206) 820-4669/FAX (206) 821-3914

№ 00620

Chain of Custody Record / Analysis Request

Project Name: Y Pay Mor Job No.: ~~W-8773~~ W-7883-8
Project Manager: DAK Phone #: 820-4669
Sampler: SJN / SRO

Analysis Requested: (write preferred method in box)

RZA-AGRA Sample ID	Lab Samp ID	Date Collected	Time Collected	Matrix (S=soil, W=water, A=air)	# Containers/Preservation: 40 ml VOA /	1 L Glass /	8 oz Glass /				CHILL	TPH E, V.L. TRANS LIS ACETONE																	Hold for Further Analysis	RUSH (see below)
SVS-5	39173	4/13/93	1:00	A								X																		
SVS-6	39174	4/13/93	1:15	A								X																		
SVS-7	39175	4/13/93	1:30	A								X																		
SVS-8	39176	4/13/93	1:45	A								X																		
SVS-9	39177	4/13/93	2:00	A								X																		

RELINQUISHED BY SAMPLER:	RELINQUISHED BY:	RELINQUISHED BY:	LABORATORY:	Special Handling
Signature: [signature]	Signature:	Signature:		Turnaround:
Printed Name: Stephen J. Nichols	Printed Name:	Printed Name:	Total # Containers:	☐ 8 hour
Firm: RZA-AGRA	Firm:	Firm:	Condition of Containers?	☐ 24 hour
Date/Time: 4/13/93/5:15	Date/Time:	Date/Time:	Condition of Seals?	☐ 5 business day
RECEIVED BY:	RECEIVED BY:	RECEIVED BY:		☐ 10 business day
Signature: [signature]	Signature:	Signature:	PURPOSE OF SAMPLING / COMMENTS:	☐ other _____ (#)business day
Printed Name: ROBERT C. NIANCARROW	Printed Name:	Printed Name:		
Firm: FRIEDMAN & BRUYA	Firm:	Firm:		
Date/Time: 13-93 5:20pm	Date/Time:	Date/Time:		

DISTRIBUTION: WHITE - return to originator; YELLOW - lab; PINK - retained by originator; GOLDENROD - to lab in advance

PAGE ____ OF ____

FRIEDMAN & BRUYA, INC.

ENVIRONMENTAL CHEMISTS

Date of Report: April 21, 1993
Date Received: April 19, 1993
Project: 11-07883-08, Y-Pay-More

RESULTS FROM THE ANALYSIS OF AIR SAMPLES FOR SOIL GASES USING EPA METHODS 8015 (MODIFIED) AND 8010

Results Reported as µl gas/liter volume (ppm)

Sample ID	SVS-10	SVS-11	SVS-12
Analyte:			
Vinyl Chloride	<1	<1	<1
Acetone	<1	<1	<1
t-Dichloroethylene	<1	<1	<1
cis-Dichloroethylene	<1	<1	<1
Trichloroethylene	<1	<1	<1
Tetrachloroethylene	<1	1	<1

FRIEDMAN & BRUYA, INC.

ENVIRONMENTAL CHEMISTS

Date of Report: April 21, 1993
Date Received: April 19, 1993
Project: 11-07883-08, Y-Pay-More

RESULTS FROM THE ANALYSIS OF AIR SAMPLES FOR SOIL GASES USING EPA METHODS 8015 (MODIFIED) AND 8010

Results Reported as µl gas/liter volume (ppm)
Quality Assurance

Sample #	Blank
Analyte:	
Vinyl Chloride	<1
Acetone	<1
t-Dichloroethylene	<1
cis-Dichloroethylene	<1
Trichloroethylene	<1
Tetrachloroethylene	<1

4.16.93 3.45 pm

RZA-AGRA
Environmental & Engineering Services
11335 Northeast 122nd Way
Kirkland, Washington 98034-6918
(206) 820-4669/FAX (206) 821-3914

№ 01848

Chain of Custody Record / Analysis Request

Project Name: Y-PAY-MOR Job No.: 11-07883-08
Project Manager: D. KRAMER Phone #: 820-4669
Sampler: S. OVERWICK

Analysis Requested: (write preferred method in box)

RZA-AGRA Sample ID	Lab Samp ID	Date Collected	Time Collected	Matrix (S=soil, W=water, A=air)	# Containers/Preservation: 40 ml VOA /	1 L Glass /	8 oz Glass /				CHILL	TCE PCE VC	TRANS CIS	ACETONE															Hold for Further Analysis	RUSH (see below)
SVS-10	39337	4/16/93	14:00	A								X X	X X	X X																
SVS-11	39338	4/16/93	12:25	A																										
SVS-12	39339	4/16/93	12:00	A								X	X	X																

RELINQUISHED BY SAMPLER:	RELINQUISHED BY:	RELINQUISHED BY:	LABORATORY:	Special Handling
Signature: Scott Overwick	Signature:	Signature:		Turnaround:
Printed Name: Scott Overwick	Printed Name:	Printed Name:	Total # Containers:	☐ 8 hour
Firm: RZA-AGRA	Firm:	Firm:	Condition of Containers?	☐ 24 hour
Date/Time: 4-16-93 3:45 pm	Date/Time:	Date/Time:	Condition of Seals?	☐ 5 business day
				☐ 10 business day
				☐ other _____ (#)business day
RECEIVED BY:	RECEIVED BY:	RECEIVED BY:	PURPOSE OF SAMPLING / COMMENTS:	
Signature: A J Friedman	Signature:	Signature:		
Printed Name: AJ Friedman	Printed Name:	Printed Name:		
Firm: Friedman & Bruya	Firm:	Firm:		
Date/Time: 4-16-93 3:45 pm	Date/Time:	Date/Time:		

DISTRIBUTION: WHITE - return to originator; YELLOW - lab; PINK - retained by originator; GOLDENROD - to lab in advance

PAGE ____ OF ____

FRIEDMAN & BRUYA, INC.

ENVIRONMENTAL CHEMISTS

Date of Report: April 26, 1993
Date Received: April 21, 1993
Project: W-7883-8

RESULTS FROM THE ANALYSIS OF AIR SAMPLES FOR SOIL GASES USING EPA METHODS 8015 (MODIFIED) AND 8010 per Washington DOE Guidelines

Results Reported as µl gas/liter volume (ppm)

Sample #	SVS-13	SVS-14	SVS-15	SVS-16
Analyte:				
Vinyl Chloride	<1	<1	<1	<1
t-Dichloroethylene	<1	<1	<1	<1
cis-Dichlorethylene	<1	<1	<1	<1
Trichloroethylene	<1	<1	<1	<1
Tetrachloroethylene	<1	<1	<1	<1
Acetone	<1	<1	<1	<1

FRIEDMAN & BRUYA, INC.

ENVIRONMENTAL CHEMISTS

Date of Report: April 26, 1993
Date Received: April 21, 1993
Project: W-7883-8

RESULTS FROM THE ANALYSIS OF AIR SAMPLES FOR SOIL GASES USING EPA METHODS 8015 (MODIFIED) AND 8010 per Washington DOE Guidelines

Results Reported as µl gas/liter volume (ppm)
Quality Assurance

Sample #	Blank
Analyte:	
Vinyl Chloride	<1
t-Dichloroethylene	<1
cis-Dichlorethylene	<1
Trichloroethylene	<1
Tetrachloroethylene	<1
Acetone	<1

BRUYA, INC.
venue West
98119

4-21-93
4:0

SAMPLE CHAIN OF CUSTODY

Report To:
Company: RZA AURA Inc
Address: 11335 NE 122nd WA Suite 100
City, State, Zip: Kirkland WA
Phone #: 822-4669
Contact:
Date: 4/21/93

SITE NO.:
PROJECT NAME: Y PAY MORE
PURCHASE ORDER #: W-7863-8
SAMPLERS (signature): Steph J. Nichols
PROJECT LOCATION: Federal WA WA
REMARKS:

SAMPLE DISPOSAL INFORM.
- Dispose after 30 days
- Return Samples
- Call for Instructions

SAMPLE #	Date/Time Sampled	Type of Sample	# of Jars	Lab Sample #	Analyses Requested
SVS-13	4/21/93	Air	1L	39430	PCE. TCE. V.C. Trans CIS ACETONE
SVS-14	4/21/93	Air	1L	39431	"
SVS-15	4/21/93	Air	1L	39432	"
SVS-16	4/21/93	Air	1L	39433	"

SIGNATURE	PRINT NAME	COMPANY	Date	Time
Relinquished by: Steph J. Nichols	Steve Nichols	RZA AURA Inc	4/21/93	4:00
Received by: STEVE ZAPPONE	STEVE ZAPPONE	FBT	4/21/93	4:00
Relinquished by:				
Received by:				

Appendix C

APPENDIX C
AMBIENT AIR MONITORING RESULTS AND ANALYTICAL CERTIFICATES

11 August 1993 Job Number: 11-07889-03
Y-Pay-Mor

Attention:Dale Kramer

Regarding:Ambient Testing at Y-Pay-Mor.

RZA-AGRA personnel performed ambient sampling for air health and safety concerns at two site locations. Site 1 was at Y-Pay-Mor. Site 2 was at living Well Lady. The two sites share a common wall near the remediation site. Sampling was performed in conjunction with soil remediation being conducted at Y-Pay-Mor (dry cleaners). Air testing was performed to determine if the remediation activities caused any fugitive air emission from the well sites. Monitoring was conducted on a regular basis (when the remediation unit was operating) to insure personnel safety at the two sites.

VINYL CHLORIDE: The air quality was monitored routinely for vinyl chloride. Air quality samples were taken at Y-Pay-Mor and at Living Well Lady. Sampling was conducted with a personal size sample pump and air samples were drawn though a coconut shell charcoal tube at a rate of 1.0 L/min for no less than 1 hour. Sampling and analysis was conducted according to NIOSH Method 1007. Sample recovery was performed in the field, packed on ice and shipped to Friedman & Bruya, Inc. for analysis by gas chromatography (FID). The reported sample concentration is in ppmv.

TETRACHLOROETHYLENE: Monitoring for tetrachloroethylene (PCE) was conducted on a regular basis in both Living Well Lady and Y-Pay-Mor. Sampling for PCE was conducted with the use of passive badges packed with coconut shell charcoal and sampled from 1 to 2 hours. The testing and analysis was conducted per NIOSH Method 1003 and analyzed by Friedman & Bruya, Inc. by gas chromatography (FID). The reported results are ppm.

FIELD LOGS : All Testing at the two site were documented in a field log. Each field log outlines the activities conducted at the site on that date. All field logs generated on this project are submitted within this report.

11 August 1993
Y-Pay-Mor

DISCUSSION : The remediation activities at Y-Pay-Mor thus far have shown little to no fugitive air emissions detected at Y-Pay-Mor or at Living Well Lady. The remediation unit used at the site is design with the intake vacuum slightly higher than the amount of air pressure being force into the soil. With the presence of this condition, the remediation site is under a constant vacuum. Due to the presence of a vacuum on the area under the concrete slab, ambient air is drawn into the soil from other sources (crack, joints, or cuts) in the concrete preventing the emission of fugitive gases. With the continued monitoring of this current remediation configuration the need to monitor air quality has ceased. However, if the current subsurface pressure changes, air monitoring air quality should be sampled.

SUMMARY OF ANALYTICAL REPORTS : listed below is a summary of the air sampling results. The results are in ppm and listed in weekly order.

SAMPLE DATE	VINYL CHLORIDE (ppm average)	TETRACHLOROETHYLENE (ppm average)
4/26-27/93		
Y-Pay-Mor (YPM)	0.013	< 0.30
Living Well Lady (LWL)	< 0.013	1.66
5/17/93		
YPM	< 0.01	< 0.01
LWL	< 0.01	< 0.01
6/7/93		
YPM	< 0.01	< 0.01
LWL	< 0.01	< 0.01
6/25/93 (a)		
YRM	-	-
LWL	-	-
7/15/93		
YPM	< 0.006	0.05
LWL	< 0.006	< 0.02
7/22/93		
YPM	< 0.006	0.025
LWL	< 0.006	< 0.02
7/29/93		
YPM	< 0.01	< 0.04

(a) Remediation activities were on hold prior to sampling, Samples were taken but not analyzed.

LABORATORY ANALYSIS

Itek Enviro Services, Inc.

Industrial Hygiene and Environmental Laboratory

4/30/93

Mr. Dale Kramer
RZA AGRA, Inc.
11335 Northeast 122 nd Way #100
Kirkland, WA 98034-6918

Client PO#: 6464-12
Project #: 6464-12
Survey #:

LABORATORY RESULTS

Date Sampled: 04/27/93
Analyzed: 04/30/93
Matrix: SKC Badges

Lab Job #: 93376
Date Received: 04/29/93
Reported: 04/30/93

Method: Halogenated Hydrocarbons (NIOSH 1003, DL=0.01 mg)
Vinyl Chloride (NIOSH 1007, DL=0.001 mg)

Lab#	Smpl. ID	Air Vol. (lt)	Found mg	Concentration mg/m3	ppm
376-01	LWC-1	4.32			
TETRACHLOROETHYLENE			0.029	6.710	0.989
376-02	LWC-2	4.26			
TETRACHLOROETHYLENE			0.068	16.000	2.360

Lab#	Smpl. ID	Air Vol. (lt)	Front mg	Back mg	Total mg	Concentration mg/m3	ppm
376-03	VC-2	30.0					
VINYL CHLORIDE			<0.001	<0.001	<0.001	<0.033	<0.013

This report has been reviewed
and approved for release

83 E. Grand Avenue, Suite E
South San Francisco, CA 94080-3606

AIHA Accredited - #432

(415) 952-8501
Fax (415) 952-4359

Itek Enviro Services, Inc.

Industrial Hygiene and Environmental Laboratory

4/29/93

Mr. Kelly David
RZA AGRA, Inc.
11335 Northeast 122 nd Way #100
Kirkland, WA 98034-6918

Client PO#:
Project #: Y-PAY MORE
Survey #:

L A B O R A T O R Y R E S U L T S

Date Sampled: 04/26/93
Analyzed: 04/28/93
Matrix: SKC Badges, anasorb tube

Lab Job #: 93370
Date Received: 04/28/93
Reported: 04/29/93

Method: Halogenated Hydrocarbons (NIOSH 1003, DL=0.01 mg)
Vinyl Chloride (NIOSH 1007, DL=0.001 mg)

Lab#	Smpl. ID	Air Vol. (lt)	Found mg	Concentration mg/m3	Concentration ppm
370-01	PB1	4.9			
TETRACHLOROETHYLENE			<0.010	<2.040	<0.301
370-02	PB2	4.9			
TETRACHLOROETHYLENE			<0.010	<2.040	<0.301
370-03	PB3	4.97			
TETRACHLOROETHYLENE			<0.010	<2.010	<0.296
370-05	KGO1	2.71			
TETRACHLOROETHYLENE			<0.010	<3.690	<0.544

Lab#	Smpl. ID	Air Vol. (lt)	Front mg	Back mg	Total mg	Concentration mg/m3	Concentration ppm
370-04	VC1	30.0					
VINYL CHLORIDE			0.001	<0.001	0.001	0.033	0.013

This report has been reviewed
and approved for release

OK DT

383 E. Grand Avenue, Suite E
South San Francisco, CA 94080-3606
AIHA Accredited #432
(415) 952-8501

FRIEDMAN & BRUYA, INC.

ENVIRONMENTAL CHEMISTS

Date of Report: May 24, 1993
Date Received: May 18, 1993
Project: 6464-12, Y-Pay-More
Date Extracts Analyzed: May 19, 1993

RESULTS FROM THE ANALYSIS OF PASSIVE SAMPLER BADGE SAMPLES FOR TETRACHLOROETHYLENE

Results Reported as uL gas/Liter volume (ppm)

Sample ID	Tetrachloroethylene	Internal Standard (% Recovery)
Y-1	<0.01	99%
L-1	<0.01	103%
L-2	<0.01	98%
KGD-2	<0.01	85%
Quality Assurance		
Blank	<0.01	115%
L-2 (Replicate)	<0.01	104%
Spike Blank % Recovery	91%	95%
Spike Level	0.2	

FRIEDMAN & BRUYA, INC.

ENVIRONMENTAL CHEMISTS

Date of Report: May 24, 1993
Date Received: May 18, 1993
Project: 6464-12, Y-Pay-More
Date Samples Extracted: May 18, 1993
Date Extracts Analyzed: May 19, 1993

RESULTS FROM THE ANALYSIS OF THE CHARCOAL TUBE SAMPLES FOR VINYL CHLORIDE

Results Reported as µL gas/Liter volume (ppm)

Sample ID	Vinyl Chloride	Internal Standard (% Recovery)
L-A	<0.01	114%
Y-A	<0.01	1,500%[a]
KGD-1	<0.01	na
Quality Assurance		
Blank	<0.01	92%
L-A (Replicate)	<0.01	105%
Spike Blank % Recovery	94%	88%
Spike Level	0.1	

[a] The value reported fell outside of the control limits due to the presence of PCE in the sample at a level of roughly 0.7 ppm.
[na] The analyte indicated was not added to the sample.

FRIEDMAN & BRUYA, INC.

ENVIRONMENTAL CHEMISTS

Andrew John Friedman
James E. Bruya, Ph.D.
(206) 285-8282

3008-B 16th Avenue West
Seattle, WA 98119
FAX: (206) 283-5044

July 15, 1993

Dale Kramer, Project Manager
RZA - AGRA
11335 NE 122nd Way, Suite 100
Kirkland, WA 98034

Dear Mr. Kramer:

Enclosed are the results from the testing of material submitted on July 8, 1993 from Project W-7883-8, Y Pay More.

The values reported for both vinyl chloride in the charcoal tubes and tetrachloroethylene in the passive badges were calculated using the following exposure information:

Charcoal tube samples:

6464-1, 1 L/min. for 60 min.
6462-2, 1 L/min. for 60 min.
6463-3, 1 L/min. for 60 min.

Passive badge samples:

6464-4, 2 hours, 30 min.
6464-5, 2 hours, 30 min.
6464-6, 2 hours, 30 min.
6464-7, 2 hours, 30 min.
6464-8, 2 hours, 30 min.

We appreciate this opportunity to be of service to you and hope you will call if you should have any questions.

Sincerely,

Stephen D. Zappone
Chemist

SDZ/dp

Enclosures

FRIEDMAN & BRUYA, INC.

ENVIRONMENTAL CHEMISTS

Date of Report: July 15, 1993
Date Received: July 8, 1993
Project: W-7883-8, Y Pay More
Date Samples Extracted: July 9, 1993
Date Extracts Analyzed: July 9, 1993

RESULTS FROM THE ANALYSIS OF CHARCOAL TUBE SAMPLES FOR VINYL CHLORIDE

per Washington DOE Guidelines

Results Reported as µl gas/liter volume (ppm)

Sample ID	Vinyl Chloride
6464-1	<0.01
6464-2	<0.01
6464-3	<0.01
Quality Assurance	
Blank	<0.01

FRIEDMAN & BRUYA, INC.

ENVIRONMENTAL CHEMISTS

Date of Report: July 15, 1993
Date Received: July 8, 1993
Project: W-7883-8, Y Pay More
Date Samples Extracted: July 9, 1993
Date Extracts Analyzed: July 9, 1993

RESULTS FROM THE ANALYSIS OF PASSIVE BADGE SAMPLES FOR TETRACHLOROETHYLENE
per Washington DOE Guidelines
Results Reported as µl gas/liter volume (ppm)

Sample ID	Tetrachloroethylene	Internal Standard % Recovery
6464-4	<0.02	105%
6464-5	<0.02	88%
6464-6	<0.02	107%
6464-7	<0.02	90%
6464-8	<0.02	93%

Quality Assurance

Blank	<0.02	117%
Spike Blank % Recovery	106%	na
Spike Level	10	

[na] The analyte indicated was not added to the matrix spike sample.

FRIEDMAN & BRUYA, INC.

ENVIRONMENTAL CHEMISTS

Andrew John Friedman
James E. Bruya, Ph.D.
(206) 285-8282

3008-B 16th Avenue West
Seattle, WA 98119
FAX: (206) 283-5044

July 29, 1993

Dale Kramer, Project Manager
RZA - AGRA
11335 NE 122nd Way, Suite 100
Kirkland, WA 98034

Dear Mr. Kramer:

Enclosed are the results from the testing of material submitted on July 16, 1993 from Project 7883-8, Y Pay-More.

The values reported for both Vinyl Chloride in the charcoal tubes and TCE in the passive badges were calculated using the following exposure information.

Charcoal tube samples:	7883-1, 1 L/min. for 60 min.
	7883-4, 1 L/min. for 60 min.
	7883-8, 1 L/min. for 60 min.
Passive badge samples:	7883-2, 2 hours
	7883-3, 2 hours
	7883-5, 2 hours
	7883-6, 2 hours
	7883-7, 2 hours

We appreciate this opportunity to be of service to you and hope you will call if you should have any questions.

Sincerely,

Elaine Zamora

Elaine K. Zamora
Chemist

EKZ/dp

Enclosures

FRIEDMAN & BRUYA, INC.

ENVIRONMENTAL CHEMISTS

Date of Report: July 29, 1993
Date Received: July 16, 1993
Project: 7883-8, Y Pay-More
Date Samples Extracted: July 23, 1993

RESULTS FROM THE ANALYSIS OF CHARCOAL TUBE SAMPLES FOR TRICHLOROETHYLENE AND TETRACHLOROETHYLENE USING EPA METHOD 8010

Results Reported as μL gas/Liter volume (ppm)

Sample #	Trichloroethylene	Tetrachloroethylene
7883-2	<0.02	0.04
7883-3	<0.02	0.06
7883-5	<0.02	<0.02
7883-6	<0.02	<0.02
7883-7	<0.02	<0.02

Quality Assurance

Blank	<0.02[a]	<0.02[a]
10 ppm Continuing Calibration % Recovery	98%	89%

[a] Assuming same volume of gas was extracted.

FRIEDMAN & BRUYA, INC.

ENVIRONMENTAL CHEMISTS

Date of Report: July 29, 1993
Date Received: July 16, 1993
Project: 7883-8, Y Pay-More
Date Samples Extracted: July 23, 1993

RESULTS FROM THE ANALYSIS OF CHARCOAL TUBE SAMPLES FOR VINYL CHLORIDE USING EPA METHOD 8010

Results Reported as μL gas/Liter volume (ppm)

Sample #	Vinyl Chloride
7883-1	<0.006
7883-4	<0.006
7883-5	<0.006

Quality Assurance

Blank	<0.1
1,000 ppm Continuing Calibration % Recovery	100%
10 ppm Continuing Calibration % Recovery	99%

FRIEDMAN & BRUYA, INC.

ENVIRONMENTAL CHEMISTS

Andrew John Friedman
James E. Bruya, Ph.D.
(206) 285-8282

3008-B 16th Avenue West
Seattle, WA 98119
FAX: (206) 283-5044

July 29, 1993

Dale Kramer, Project Manager
RZA - AGRA
11335 NE 122nd Way, Suite 100
Kirkland, WA 98034

Dear Mr. Kramer:

Enclosed are the results from the testing of material submitted on July 26, 1993 from Project 7883-8, Y-Pay-More.

The values reported for both Vinyl Chloride in the charcoal tubes and TCE in the passive badges were calculated using the following exposure information.

Charcoal tube samples:	7883-14 LWL, 1 L/min. for 60 min.
	7883-15 YPM, 1 L/min. for 60 min.
	7883-16 Blank, 1 L/min. for 60 min.
Passive badge samples:	7883-9 Blank, 120 minutes
	7883-10 1 LWL, 120 minutes
	7883-11 2 LWL, 120 minutes
	7883-12 1 YPM, 120 minutes
	7883-13 2 YPM, 120 minutes

We appreciate this opportunity to be of service to you and hope you will call if you should have any questions.

Sincerely,

Elaine Zamora

Elaine K. Zamora
Chemist

EKZ/dp

Enclosures

FRIEDMAN & BRUYA, INC.

ENVIRONMENTAL CHEMISTS

Date of Report: July 29, 1993
Date Received: July 26, 1993
Project: 7883-8, Y-Pay-More

RESULTS FROM THE ANALYSIS OF PASSIVE BADGE SAMPLES FOR TRICHLOROETHYLENE AND TETRACHLOROETHYLENE USING EPA METHOD 8010

Results Reported as μL gas/Liter volume (ppm)

Sample #	Trichloroethylene	Tetrachloroethylene
7883-9 Blank	<0.02	<0.02
7883-10 1 LWL	<0.02	<0.02
7883-11 2 LWL	<0.02	<0.02
7883-12 1 YPM	<0.02	0.02
7883-13 2 YPM	<0.02	0.03

Quality Assurance

Blank	<0.02[a]	<0.02[a]
10 ppm Continuing Calibration % Recovery	96%	89%

[a] Assuming the same volume of gas was extracted.

FRIEDMAN & BRUYA, INC.

ENVIRONMENTAL CHEMISTS

Date of Report: July 29, 1993
Date Received: July 26, 1993
Project: 7883-8, Y-Pay-More

RESULTS FROM THE ANALYSIS OF CHARCOAL TUBE SAMPLES FOR VINYL CHLORIDE USING EPA METHOD 8010

Results Reported as µL gas/Liter volume (ppm)

Sample #	Vinyl Chloride
7883-14 LWL	<0.006
7883-15 YPM	<0.006
7883-16 Blank	<0.006

Quality Assurance

Blank	<0.006[a]
10 ppm Continuing Calibration % Recovery	99%

[a] Assuming the same volume of gas was extracted.

FRIEDMAN & BRUYA, INC.

ENVIRONMENTAL CHEMISTS

Date of Report: August 9, 1993
Date Received: August 2, 1993
Project: 7883, Y-Pay-More
Date Samples Extracted: August 3, 1993
Date Extracts Analyzed: August 5, 1993

RESULTS FROM THE ANALYSIS OF THE CHARCOAL FILTER SAMPLES FOR VINYL CHLORIDE USING EPA METHOD 8010

Results Reported as µL gas/Liter volume (ppm)

Sample #	Vinyl Chloride
7883-1	<0.01
7883-4	<0.01

Quality Assurance

Blank	<0.01
Spike Blank % Recovery	72%
Spike Level	100

FRIEDMAN & BRUYA, INC.

ENVIRONMENTAL CHEMISTS

Date of Report: August 9, 1993
Date Received: August 2, 1993
Project: 7883, Y-Pay-More
Date Samples Extracted: August 3, 1993
Date Extracts Analyzed: August 5, 1993

RESULTS FROM THE ANALYSIS OF PASSIVE BADGE SAMPLES FOR TRICHLOROETHYLENE AND TETRACHLOROETHYLENE USING EPA METHOD 8010

Results Reported as µL gas/Liter volume (ppm)

Sample #	Trichloroethylene	Tetrachloroethylene
7883-2	<0.04	<0.04
7883-3	<0.04	<0.04

Quality Assurance

Blank	<0.04	<0.04
Spike Blank % Recovery	81%	83%
Spike Level	1	1

RZA-AGRA
Environmental & Engineering Services
11335 Northeast 122nd Way
Kirkland, Washington 98034-6918
(206) 820-4669/FAX (206) 821-3914

№ 01870

Chain of Custody Record / Analysis Request

Project Name: Y-PAY MORE Job No.: 7883-4
Project Manager: DALE KRAMER Phone #: 820 4669
Sampler: KELLY DAVID

Analysis Requested: (write preferred method in box)

RZA-AGRA Sample ID	Lab Samp ID	Date Collected	Time Collected	Matrix (S=soil, W=water, A=air)	# Containers/Preservation: 40 ml VOA /	1 L Glass /	8 oz Glass /	PASSIVE BA.	URBAN SIEVE	CHILL	TETRACHLOROETHYLENE	VINYL CHLORIDE	Hold for Further Analysis	RUSH (see below)
PB-1		4/26	0925	A				X			X	X		
PB-2		4/26	1546	A				X			X	X		
PB-3		4/26	1350	A				X			X	X		
VC-1		4/26	1600	A					X			X		
KGD-1		4/27	0940	A				X			X			

RELINQUISHED BY SAMPLER:	RELINQUISHED BY:	RELINQUISHED BY:
Signature: [signature]	Signature: Olivia A. Alejandro	Signature:
Printed Name: KELLY DAVID	Printed Name: OLIVIA A. ALEJANDRO	Printed Name:
Firm: RZA AGRA	Firm: ITEK	Firm:
Date/Time: 4/27/93	Date/Time: 4/30/93 4PM	Date/Time:
RECEIVED BY:	RECEIVED BY:	RECEIVED BY:
Signature: Olivia A. Alejandro	Signature:	Signature:
Printed Name: OLIVIA A. ALEJANDRO	Printed Name:	Printed Name:
Firm: ITEK	Firm:	Firm:
Date/Time: 4-28-93 9:40AM	Date/Time:	Date/Time:

LABORATORY: ITEK
Total # Containers:
Condition of Containers?
Condition of Seals?

Special Handling
Turnaround:
- ☐ 8 hour
- ☒ 24 hour
- ☐ 5 business day
- ☐ 10 business day
- ☐ other _____ (#)business day

PURPOSE OF SAMPLING / COMMENTS:

Form 100B DISTRIBUTION: WHITE - return to originator; YELLOW - lab; PINK - retained by originator; GOLDENROD - to lab in advance PAGE ____ OF ____

RZA-AGRA
Environmental & Engineering Services
11335 Northeast 122nd Way
Kirkland, Washington 98034-6918
(206) 820-4669/FAX (206) 821-3914

№ 01871

Chain of Custody Record / Analysis Request

Project Name: Y-PAY MORE Job No.: 6464-12
Project Manager: CALE KRAMER Phone #: 206 820 4669
Sampler: KELLY DAVIS

Analysis Requested: (write preferred method in box)

RZA-AGRA Sample ID	Lab Samp ID	Date Collected	Time Collected	Matrix (S=soil, W=water, A=air)	# Containers/Preservation: 40 ml VOA /	1 L Glass /	8 oz Glass /	CARBON SEIVE	PHSIVE BOTTLE	CHILL	TETRA CHLOROETHYLENE	VINYL CHLORIDE	Hold for Further Analysis	RUSH (see below)
LWL-2		4/27	1610	A					X		X			
LWL-1		4/27	1600	A					X		X			
VC-2		4/27	1640	A				X				X		

RELINQUISHED BY SAMPLER:	RELINQUISHED BY:	RELINQUISHED BY:
Signature: [signature]	Signature: Olivia A. Alejandro	Signature:
Printed Name: KELLY DAVIS	Printed Name: OLIVIA A. ALEJANDRO	Printed Name:
Firm: RZA AGRA	Firm: ITEK	Firm:
Date/Time: 4/28/93 0825	Date/Time: 4/30/93 4pm	Date/Time:
RECEIVED BY:	RECEIVED BY:	RECEIVED BY:
Signature: Anna Rodriguez	Signature:	Signature:
Printed Name: ANNA RODRIGUEZ	Printed Name:	Printed Name:
Firm: ITEK LAB	Firm:	Firm:
Date/Time: 4/28/93	Date/Time:	Date/Time:

LABORATORY: ITEK
Total # Containers:
Condition of Containers?
Condition of Seals?

Special Handling
Turnaround:
- ☐ 8 hour
- ☒ 24 hour
- ☐ 5 business day
- ☐ 10 business day
- ☐ other _____ (#)business day

PURPOSE OF SAMPLING / COMMENTS:

Form 100B DISTRIBUTION: WHITE - return to originator; YELLOW - lab; PINK - retained by originator; GOLDENROD - to lab in advance PAGE ____ OF ____

RZA-AGRA
Environmental & Engineering Services
11335 Northeast 122nd Way
Kirkland, Washington 98034-6918
(206) 820-4669/FAX (206) 821-3914

N: 01904

Chain of Custody Record / Analysis Request

Project Name: Job No.:
Project Manager: Phone #:
Sampler:

RZA-AGRA Sample ID	Lab Samp ID	Date Collected	Time Collected	Matrix (S=soil, W=water, A=air)	# Containers/Preservation: 40 ml VOA /	1 L Glass /	8 oz Glass /				CHILL	Analysis Requested: (write preferred method in box)																		Hold for Further Analysis	RUSH (see below)
								X				X																			
												X																			
												X																			
									X				X																		
									X				X																		
								X				X																			
									X				X																		

RELINQUISHED BY SAMPLER:	RELINQUISHED BY:	RELINQUISHED BY:	LABORATORY:	Special Handling
Signature:	Signature:	Signature:		Turnaround:
Printed Name:	Printed Name:	Printed Name:	Total # Containers:	☐ 8 hour
Firm:	Firm:	Firm:	Condition of Containers?	☐ 24 hour
Date/Time:	Date/Time:	Date/Time:	Condition of Seals?	☐ 5 business day
RECEIVED BY:	RECEIVED BY:	RECEIVED BY:		☐ 10 business day
Signature:	Signature:	Signature:		☐ other _____ (#)business day
Printed Name:	Printed Name:	Printed Name:	PURPOSE OF SAMPLING / COMMENTS:	
Firm:	Firm:	Firm:		
Date/Time: 11/13 11:3	Date/Time:	Date/Time:		

DISTRIBUTION: WHITE - return to originator; YELLOW - lab; PINK - retained by originator; GOLDENROD - to lab in advance

RZA-AGRA
Environmental & Engineering Services
11335 Northeast 122nd Way
Kirkland, Washington 98034-6918
(206) 820-4669/FAX (206) 821-3914

PAGE 01918

Chain of Custody Record / Analysis Request

Project Name: YPAY MORE Job No.: 6116.12
Project Manager: [illegible] Phone #: (206) 820-4669
Sampler: [illegible]

Analysis Requested: (write preferred method in box)

RZA-AGRA Sample ID	Lab Samp ID	Date Collected	Time Collected	Matrix (S=soil, W=water, A=air)	# Containers/Preservation: 40 ml VOA /	1 L Glass /	8 oz Glass /	[illegible]	[illegible]	CHILL	Vinyl Chloride	TCE															Hold for Further Analysis	RUSH (see below)
6116.01-1	1	7/17/92	1100	A				X			X																	
6116.01-2	2	"	1100	W				X			X																	
6116.01-3	3	"	[illegible]					X			X																	
6116.01-4	4		[illegible]						X	X		X																
6116.01-5	5		2.5 hr						X	X		X																
6116.01-6	6		2.5 hr						X	X		X																
6116.01-7	7		2.5 hr						X	X		X																
6116.01-8	8	7/17/92	[illegible]						X	X		X																

Sample IDs 1-3: Vinyl Chloride
Sample IDs 4-8: TCE

RELINQUISHED BY SAMPLER:	RELINQUISHED BY:	RELINQUISHED BY:
Signature: [illegible]	Signature:	Signature:
Printed Name: Carl D. Donaldson	Printed Name:	Printed Name:
Firm: RZA-AGRA	Firm:	Firm:
Date/Time: 6/7/92	Date/Time:	Date/Time:
RECEIVED BY:	RECEIVED BY:	RECEIVED BY:
Signature:	Signature:	Signature:
Printed Name:	Printed Name:	Printed Name:
Firm:	Firm:	Firm:
Date/Time:	Date/Time:	Date/Time:

LABORATORY:
Total # Containers:
Condition of Containers?
Condition of Seals?

Special Handling
Turnaround:
- ☐ 8 hour
- ☐ 24 hour
- ☐ 5 business day
- ☐ 10 business day
- ☐ other _____ (#)business day

PURPOSE OF SAMPLING / COMMENTS:
Living Lab = Sampled [illegible]
YPAY-MORE = 2.6 [illegible]

Form 100B

DISTRIBUTION: WHITE - return to originator; YELLOW - lab; PINK - retained by originator; GOLDENROD - to lab in advance

PAGE ____ OF ____

RZA AGRA, Inc.
Engineering & Environmental Services
11335 N.E. 122nd Way, Suite 100
Kirkland, Washington 98034
(206) 820-4669 FAX (206) 821-3914

12201

Chain of Custody Record / Analysis Request

Project Name: Job No.:
Project Manager: Phone #:
Sampler:

Analysis Requested: (circle, check box or write preferred method in box)

RZA AGRA, Inc. Sample ID	Lab Samp ID	Date Collected	Time Collected	Matrix (S=soil, W=water, A=air)	# Containers/Preservation: 40 ml VOA /	1 L Glass /	8 oz Glass /				CHILL	BTEX by EPA 8020 Soil / EPA 602 Water	WTPH-G	BTEX / WTPH-G	WTPH-HCID	WTPH-D	TPH by EPA 8015 Mod.	WTPH-418.1 Modified	TPH by EPA 418.1	LEAD EPA 6010 7420 7421 Soil / Total / Dissolved EPA 7421 Water	TOTAL METALS	TCLP EPA 1311	PCBs EPA 8080 Soil / EPA 608 Water	VOCs EPA 8010 8020 Soil / EPA 601 602 Water	GC/MS EPA 8240 Volatiles	GC/MS EPA 8270 Semi-volatiles			Hold for Further Analysis	RUSH (see below)

RELINQUISHED BY SAMPLER:	RELINQUISHED BY:	RELINQUISHED BY:
Signature:	Signature:	Signature:
Printed Name:	Printed Name:	Printed Name:
Firm:	Firm:	Firm:
Date/Time:	Date/Time:	Date/Time:
RECEIVED BY:	RECEIVED BY:	RECEIVED BY:
Signature:	Signature:	Signature:
Printed Name:	Printed Name:	Printed Name:
Firm:	Firm:	Firm:
Date/Time:	Date/Time:	Date/Time:

LABORATORY:

Total # Containers:

Condition of Containers?

Condition of Seals?

Special Handling

Turnaround:
- ☐ 8 hour
- ☐ 24 hour
- ☐ 5 business day
- ☐ 10 business day
- ☐ other _____ (#)business day

PURPOSE OF SAMPLING / COMMENTS:

Form 100A

DISTRIBUTION: WHITE - return to originator; YELLOW - lab; PINK - retained by originator; GOLDENROD - to lab in advance

PAGE ____ OF ____

RZA-AGRA

Environmental & Engineering Services
11335 Northeast 122nd Way
Kirkland, Washington 98034-6918
(206) 820-4669/FAX (206) 821-3914

N2 01963

Chain of Custody Record / Analysis Request

Project Name: 4 PAY-MORE Job No.: 7683-X
Project Manager: Dale Knowles Phone #(206)820-4669
Sampler: Carson D. Donahoo

Analysis Requested: (write preferred method in box)

RZA-AGRA Sample ID	Lab Samp ID	Date Collected	Time Collected	Matrix (S=soil, W=water, A=air)	# Containers/Preservation: 40 ml VOA /	1 L Glass /	8 oz Glass /	Chemical TUGS	Vinyl Chloride	CHILL	Vinyl Chloride	TCE	Hold for Further Analysis	RUSH (see below)
7683-1			1 hr					X			X			
7683-2			2 hr						X			X		
7683-3			2 hr						X			X		
7683-4			1 hr					X			X			
7683-5			2 hr						X			X		
7683-6			2 hr						X			X		
7683-7			2 hr						X			X		
7683-8			0					X			X			

Sample was AS Preserved on Ice
Signature Sent All TUGS

RELINQUISHED BY SAMPLER:	RELINQUISHED BY:	RELINQUISHED BY:
Signature:	Signature:	Signature:
Printed Name: Carson D. Donahoo	Printed Name:	Printed Name:
Firm: RZA-AGRA	Firm:	Firm:
Date/Time: 7/15/93 11:15	Date/Time:	Date/Time:
RECEIVED BY:	RECEIVED BY:	RECEIVED BY:
Signature:	Signature:	Signature:
Printed Name:	Printed Name:	Printed Name:
Firm:	Firm:	Firm:
Date/Time:	Date/Time:	Date/Time:

LABORATORY:

Total # Containers:

Condition of Containers?

Condition of Seals?

Special Handling

Turnaround:
- ☐ 8 hour
- ☐ 24 hour
- ☐ 5 business day
- ☐ 10 business day
- ☐ other _____ (#)business day

PURPOSE OF SAMPLING / COMMENTS:

Form 100B

DISTRIBUTION: WHITE - return to originator; YELLOW - lab; PINK - retained by originator; GOLDENROD - to lab in advance

RZA-AGRA
Environmental & Engineering Services
11335 Northeast 122nd Way
Kirkland, Washington 98034-6918
(206) 820-4669/FAX (206) 821-3914

No. 01919

Chain of Custody Record / Analysis Request

Project Name: 1-Pay-more Job No.: 7883-5
Project Manager: Dale Yamamoto Phone #: 206 820 4669
Sampler: Chris Donnelson

RZA-AGRA Sample ID	Lab Samp ID	Date Collected	Time Collected	Matrix (S=soil, W=water, A=air)	# Containers/Preservation: 40 ml VOA /	1 L Glass /	8 oz Glass /	[illegible]	[illegible]	CHILL	Analysis Requested: (write preferred method in box) [illegible]	[illegible]															Hold for Further Analysis	RUSH (see below)
7883-1 [illegible]		11/12	[illegible]					X				X																
7883-10 [illegible]								X				X																
7883-11 21 WL								X				X																
7883-12 1 YPM								X				X																
7883-13 2 YPM								X				X																
7883-14 1 WL																												
7883-15 1 YPM																												
7883-16 [illegible]								X			X																	

RELINQUISHED BY SAMPLER:	RELINQUISHED BY:	RELINQUISHED BY:
Signature: [illegible]	Signature:	Signature:
Printed Name: Chris Donnelson	Printed Name:	Printed Name:
Firm: RZA-AGRA	Firm:	Firm:
Date/Time: 11/12/92 [illegible]	Date/Time:	Date/Time:
RECEIVED BY:	**RECEIVED BY:**	**RECEIVED BY:**
Signature:	Signature:	Signature:
Printed Name:	Printed Name:	Printed Name:
Firm:	Firm:	Firm:
Date/Time:	Date/Time:	Date/Time:

LABORATORY:

Total # Containers:

Condition of Containers?

Condition of Seals?

Special Handling

Turnaround:
- ☐ 8 hour
- ☐ 24 hour
- ☐ 5 business day
- ☐ 10 business day
- ☐ other _____ (#)business day

PURPOSE OF SAMPLING / COMMENTS:

Form 100B DISTRIBUTION: WHITE - return to originator; YELLOW - lab; PINK - retained by originator; GOLDENROD - to lab in advance PAGE ____ OF ____

RZA-AGRA
Environmental & Engineering Services
11335 Northeast 122nd Way
Kirkland, Washington 98034-6918
(206) 820-4669/FAX (206) 821-3914

№ 01961

Chain of Custody Record / Analysis Request

Project Name: Job No.:
Project Manager: Phone #:
Sampler:

RZA-AGRA Sample ID	Lab Samp ID	Date Collected	Time Collected	Matrix (S=soil, W=water, A=air)	# Containers/Preservation: 40 ml VOA /	1 L Glass /	8 oz Glass /				CHILL	Analysis Requested: (write preferred method in box)																Hold for Further Analysis	RUSH (see below)

RELINQUISHED BY SAMPLER:	RELINQUISHED BY:	RELINQUISHED BY:
Signature:	Signature:	Signature:
Printed Name:	Printed Name:	Printed Name:
Firm:	Firm:	Firm:
Date/Time:	Date/Time:	Date/Time:
RECEIVED BY:	RECEIVED BY:	RECEIVED BY:
Signature:	Signature:	Signature:
Printed Name:	Printed Name:	Printed Name:
Firm:	Firm:	Firm:
Date/Time:	Date/Time:	Date/Time:

LABORATORY:

Total # Containers:

Condition of Containers?

Condition of Seals?

Special Handling

Turnaround:
- ☐ 8 hour
- ☐ 24 hour
- ☐ 5 business day
- ☐ 10 business day
- ☐ other _____ (#)business day

PURPOSE OF SAMPLING / COMMENTS:

Form 100B

DISTRIBUTION: WHITE - return to originator; YELLOW - lab; PINK - retained by originator; GOLDENROD - to lab in advance

PERSONAL MONITORING PUMP CALIBRATION

Pump I.D. # Ametek 3058 Date: 6/4/93
Temp.: 62 Temp. (std): 68
Pbar: 29.87 Pbar (std): 29.92

mils	sec.	mils/min
100	5.99	1001.7
100	5.97	1005.0
100	5.98	1003.3
100	6.01	998.3
200	12.05	995.9
200	12.05	995.9
200	11.98	1001.7
200	11.99	1000.8
250	14.98	1001.3
250	15.04	997.3

Average Flow Rate: 1000 mils/min

temp. and pressure correction: 1.01

Calibrated By: dstdL/min.: 1.01 L/min

Equations:

L/min=(volume/sec)*60
Temp./Pbar Cor.=((Temp. std/Temp.)*(Pbar/Pbar std))
dstdL/min=Average Flow Rate*Temp &Pbar Corr.

RZA-AGRA 1993

PERSONAL MONITORING PUMP CALIBRATION

Pump I.D. # Ametek 3058 Date: 7/7/93
Temp.: 72 Temp. (std): 68
Pbar: 30.27 Pbar (std): 29.92

mils	sec.	mils/min
100	5.97	1005.0
100	6.03	995.0
100	6.01	998.3
100	5.98	1003.3
200	12.12	990.1
200	11.96	1003.3
200	11.97	1002.5
200	12.02	998.3
250	14.99	1000.7
250	14.96	1002.7

Average Flow Rate: 1000 mils/min

temp. and pressure correction: 1.00

Calibrated By: dstdL/min.: 1.00 L/min

Equations:

L/min=(volume/sec)*60
Temp./Pbar Cor.=((Temp. std/Temp.)*(Pbar/Pbar std))
dstdL/min=Average Flow Rate*Temp &Pbar Corr.

RZA-AGRA 1993

PERSONAL MONITORING PUMP CALIBRATION

Pump I.D. # Ametek 3058 Date: 7/21/93
Temp.: 69 Temp. (std): 68
Pbar: 30.19 Pbar (std): 29.92

mils	sec.	mils/min
100	6.00	1000.0
100	6.05	991.7
100	6.02	996.7
100	5.98	1003.3
200	11.98	1001.7
200	11.99	1000.8
200	12.00	1000.0
200	12.04	996.7
250	15.02	998.7
250	14.99	1000.7

Average Flow Rate: 999 mils/min

temp. and pressure correction: 1.01

Calibrated By: _____ dstdL/min.: 1.01 L/min

Equations:

L/min=(volume/sec)*60
Temp./Pbar Cor.=((Temp. std/Temp.)*(Pbar/Pbar std))
dstdL/min=Average Flow Rate*Temp &Pbar Corr.

RZA-AGRA 1993

PERSONAL MONITORING PUMP CALIBRATION

Pump I.D. # Ametek 3058
Temp.: 72
Pbar: 30.21

Date: 7/23/93
Temp. (std): 68
Pbar (std): 29.92

mils	sec.	mils/min
100	5.98	1003.3
100	5.99	1001.7
100	5.96	1006.7
100	6.02	996.7
200	12.03	997.5
200	12.05	995.9
200	11.97	1002.5
200	11.98	1001.7
250	14.93	1004.7
250	14.97	1002.0

Average Flow Rate: 1001 mils/min

temp. and pressure correction: 1.00

Calibrated By: _____

dstdL/min.: 1.00 L/min

Equations:

L/min=(volume/sec)*60
Temp./Pbar Cor.=((Temp. std/Temp.)*(Pbar/Pbar std))
dstdL/min=Average Flow Rate*Temp &Pbar Corr.

RZA-AGRA 1993

PERSONAL MONITORING PUMP CALIBRATION

Pump I.D. # Ametek 3058 Date: 8/2/92
Temp.: 85 Temp. (std): 68
Pbar: 31.19 Pbar (std): 29.92

mils	sec.	mils/min
100	6.02	996.7
100	6.03	995.0
100	6.01	998.3
100	5.99	1001.7
200	12.00	1000.0
200	11.99	1000.8
200	12.01	999.2
200	12.00	1000.0
250	14.99	1000.7
250	15.02	998.7

Average Flow Rate: 999 mils/min

temp. and pressure correction: 1.01

Calibrated By: dstdL/min.: 1.01 L/min

Equations:

L/min=(volume/sec)*60
Temp./Pbar Cor.=((Temp. std/Temp.)*(Pbar/Pbar std))
dstdL/min=Average Flow Rate*Temp &Pbar Corr.

RZA-AGRA 1993

Appendix D

APPENDIX D
VES MONITORING SAMPLING ANALYTICAL TEST CERTIFICATES

FRIEDMAN & BRUYA, INC.

ENVIRONMENTAL CHEMISTS

Date of Report: October 26, 1993
Date Received: October 18, 1993
Project: 11-07883-10, Northwest Bldg. Corp.
Date Extracts Analyzed: October 23, 1993

RESULTS FROM THE ANALYSIS OF THE AIR SAMPLE FOR TETRACHLOROETHYLENE USING EPA METHOD 601

Results Reported as μL gas/Liter

Analyte:	Tetrachloroethylene
Sample #:	
VEW-3	100
Quality Assurance	
Blank	<0.1

10-18-93 1:35 pm

RZA-AGRA

Environmental & Engineering Services
11335 Northeast 122nd Way
Kirkland, Washington 98034-6918
(206) 820-4669/FAX (206) 821-3914

№ 01543

Chain of Custody Record / Analysis Request

Project Name: Northwest Bldg Corp. Job No.: 11-07883-10
Project Manager: Dale Kramer Phone #: 820 4669
Sampler: Mark Johnston

Analysis Requested: (write preferred method in box)

RZA-AGRA Sample ID	Lab Samp ID	Date Collected	Time Collected	Matrix (S=soil, W=water, A=air)	# Containers/Preservation: 40 ml VOA	1 L Glass	8 oz Glass	Tenax Brq		CHILL	PCE														Hold for Further Analysis	RUSH (see below)
VE-01-5	44809-10	10-18-93	12:24	A				X			X															

RELINQUISHED BY SAMPLER:	RELINQUISHED BY:	RELINQUISHED BY:
Signature: [signature]	Signature:	Signature:
Printed Name: Mark E Johnston	Printed Name:	Printed Name:
Firm: RZA AGRA	Firm:	Firm:
Date/Time: 10-18-93 1330	Date/Time:	Date/Time:
RECEIVED BY:	RECEIVED BY:	RECEIVED BY:
Signature: [signature]	Signature:	Signature:
Printed Name: CR HICKS	Printed Name:	Printed Name:
Firm: F+B INC	Firm:	Firm:
Date/Time: 10-18-93 1:35pm	Date/Time:	Date/Time:

LABORATORY:

Total # Containers:

Condition of Containers?

Condition of Seals?

Special Handling

Turnaround:
- ☐ 8 hour
- ☐ 24 hour
- ☐ 5 business day
- ☐ 10 business day
- ☐ other _____ (#)business day

PURPOSE OF SAMPLING / COMMENTS:
Two Bags - Duplicate Samples

rm 100B

DISTRIBUTION: WHITE - return to originator, YELLOW - lab; PINK - retained by originator; GOLDENROD - to lab in advance

PAGE ____ OF ____

FRIEDMAN & BRUYA, INC.

ENVIRONMENTAL CHEMISTS

Date of Report: November 5, 1993
Date Received: November 3, 1993
Project: 7883-10, Y Pay Mor
Date Extracts Analyzed: November 4, 1993

RESULTS FROM THE ANALYSIS OF AIR SAMPLES FOR TETRACHLOROETHYLENE USING EPA METHOD 601 MODIFIED FOR HAND INJECTION

Results Reported as μL gas/liter air

Sample #	Tetrachloroethylene
VE S 3	7
VE S 2	<1

Quality Assurance

Blank	<1
100 ppm continuing calibration % Recovery	145%

RZA-AGRA

Environmental & Engineering Services
11335 Northeast 122nd Way
Kirkland, Washington 98034-6918
(206) 820-4669/FAX (206) 821-3914

11-Amb-Lab
11-03-93
11010
11:55

Chain of Custody Record / Analysis Request

Project Name: [illegible] Job No.: [illegible]
Project Manager: [illegible] Phone #: [illegible]
Sampler: [illegible]

Analysis Requested: (circle, check box or write preferred method in box)

RZA-AGRA Sample ID	Lab Samp ID	Date Collected	Time Collected	Matrix (S=soil, W=water, A=air)	# Containers/Preservation: 40 ml VOA /	1 L Glass /	8 oz Glass /	TE/[illegible]			CHILL	BTEX by EPA 8020 Soil / EPA 602 Water	WTPH-G	BTEX / WTPH-G	WTPH-HCID	WTPH-D	TPH by EPA 8015 Mod.	WTPH-418.1 Modified	TPH by EPA 418.1	LEAD EPA 6010 7420 7421 Soil / Total / Dissolved EPA 7421 Water	TOTAL METALS	TCLP EPA 1311	PCBs EPA 8080 Soil / EPA 608 Water	VOCs EPA 8010 8020 Soil / EPA 601 602 Water	GC/MS EPA 8240 Volatiles	GC/MS EPA 8270 Semi-volatiles	PLE ([illegible])		Hold for Further Analysis	RUSH (see below)
1	45748		1					X			X																X			
2	45749		1					X			X																X			

RELINQUISHED BY SAMPLER:	RELINQUISHED BY:	RELINQUISHED BY:
Signature: [illegible]	Signature:	Signature:
Printed Name: [illegible]	Printed Name:	Printed Name:
Firm: [illegible]	Firm:	Firm:
Date/Time: 1500	Date/Time:	Date/Time:
RECEIVED BY:	**RECEIVED BY:**	**RECEIVED BY:**
Signature: Scott Olson	Signature:	Signature:
Printed Name: Scott Olson	Printed Name:	Printed Name:
Firm: E+B, Inc.	Firm:	Firm:
Date/Time: 11/[illegible]	Date/Time:	Date/Time:

LABORATORY: E+B
Total # Containers: 2
Condition of Containers? Good
Condition of Seals?

Special Handling
Turnaround:
- ☐ 8 hour
- ☐ 24 hour
- ☐ 5 business day
- ☒ 10 business day
- ☐ other _____ (#)business day

PURPOSE OF SAMPLING / COMMENTS:

Form 100A

DISTRIBUTION: WHITE - return to originator; YELLOW - lab; PINK - retained by originator; GOLDENROD - to lab in advance

PAGE ____ OF ____

FRIEDMAN & BRUYA, INC.

ENVIRONMENTAL CHEMISTS

Date of Report: November 23, 1993
Date Received: November 11, 1993
Project: 11-7883-10, Y Pay Mor
Date Extracts Analyzed: November 22, 1993

RESULTS FROM THE ANALYSIS OF THE AIR SAMPLE FOR TETRACHLOROETHYLENE USING EPA METHOD 8010

Results Reported as μL gas/liter air (ppm by volume)

Sample #	Tetrachloroethylene
VES 3 (inf)	83
Quality Assurance	
Blank	<1
VES 3 (inf) (Duplicate)	80

RZA AGRA, Inc.
Engineering & Environmental Services
11335 N.E. 122nd Way, Suite 100
Kirkland, Washington 98034
(206) 820-4669 FAX (206) 821-3914

12359

Chain of Custody Record / Analysis Reque

Project Name: 4 PAY MOR Job No.: 11-7883-10
Project Manager: [illegible] KIMMER Phone #: 820 4669
Sampler: DALE KIMMER

Analysis Requested: (circle, check box or write preferred method in box)

RZA AGRA, Inc. Sample ID	Lab Samp ID	Date Collected	Time Collected	Matrix (S=soil, W=water, A=air)	# Containers/Preservation: 40 ml VOA /	1 L Glass /	8 oz Glass /				CHILL	BTEX by EPA 8020 Soil / EPA 602 Water	WTPH-G	BTEX / WTPH-G	WTPH-HCID	WTPH-D	TPH by EPA 8015 Mod.	WTPH-418.1 Modified	TPH by EPA 418.1	LEAD EPA 6010 7420 7421 Soil / Total / Dissolved EPA 7421 Water	TOTAL METALS	TCLP EPA 1311	PCBs EPA 8080 Soil / EPA 608 Water	VOCs EPA 8010 8020 Soil / EPA 601 602 Water	GC/MS EPA 8240 Volatiles	GC/MS EPA 8270 Semi-volatiles	Tetrachloroethene		Hold for Further Analysis	RUSH (see below)
VES 3 (INF)	[illegible]	11-10-93	1100																								X			
	[illegible]																													

RELINQUISHED BY SAMPLER:	RELINQUISHED BY:	RELINQUISHED BY:
Signature: [illegible]	Signature: Kim Hazard	Signature:
Printed Name: DALE A KIMMER	Printed Name: Kim Hazard	Printed Name:
Firm: RZA	Firm: RZA	Firm:
Date/Time: 11-11-93 0930	Date/Time: 11-11-93 0935	Date/Time:
RECEIVED BY:	**RECEIVED BY:**	**RECEIVED BY:**
Signature: Kim Hazard	Signature:	Signature:
Printed Name: Kim Hazard	Printed Name:	Printed Name:
Firm: RZA	Firm:	Firm:
Date/Time: 11-11-93 0930	Date/Time:	Date/Time:

LABORATORY: FRIEDMAN BRUYA
Total # Containers: 2 Tedlar Bags
Condition of Containers?
Condition of Seals?

Special Handling
Turnaround:
- ☐ 8 hour
- ☐ 24 hour
- ☐ 5 business day
- ☐ 10 business day
- ☐ other _____ (#)business day

PURPOSE OF SAMPLING / COMMENTS:
Dispose of Tedlar Bags when finished
— 1 sample only

Form 100A

DISTRIBUTION: WHITE - return to originator; YELLOW - lab; PINK - retained by originator; GOLDENROD - to lab in advance

PAGE ____ OF ____

FRIEDMAN & BRUYA, INC.

ENVIRONMENTAL CHEMISTS

Date of Report: December 2, 1993
Date Received: November 30, 1993
Project: 11-7883-10, Y Pay Mor
Date Extracts Analyzed: November 30, 1993

RESULTS FROM THE ANALYSIS OF THE AIR SAMPLE FOR TETRACHLOROETHYLENE USING EPA METHOD 8010

Results Reported as μL gas/liter air (ppm by volume)

Sample ID	Tetrachloroethylene
VES 3 (inf)	4
Quality Assurance	
Blank	<1

/AN & BRUYA, INC.
16th Avenue West
e, WA 98119

SAMPLE CHAIN OF CUSTODY

Send Report To:
Company: RZA AGRA
Address: 11339 NE 122 WAY SUITE 100
City, State, Zip: KIRKLAND, WA
Phone #: 820-4669
Contact: DALE KRAMER
Date:

SITE NO.	PROJECT NAME	PURCHASE ORDER #
11-7883-10	4 PAY MOR	

SAMPLERS (signature): Dale A. Kramer

PROJECT LOCATION:

REMARKS:

SAMPLE DISPOSAL INFORM.
- [x] Dispose ~~after 30 days~~ after analysis
- [ ] Return Samples
- [ ] Call for Instructions

SAMPLE #	Date/Time Sampled	Type of Sample	# of Jars	Lab Sample #	Analyses Requested
VES 3 (inf)	11-30-93 1515	AIR	TEDLAR	41398	PCE

SIGNATURE	PRINT NAME	COMPANY	Date	Time
Relinquished by: Dale A. Kramer	DALE A. KRAMER	RZA AGRA	11-30-93	1600 hrs
Received by: James E Bruya	JAMES BRUYA	F&BI	11/30/93	16 00
Relinquished by:				
Received by:				

FRIEDMAN & BRUYA, INC.

ENVIRONMENTAL CHEMISTS

Date of Report: January 11, 1994
Date Received: January 6, 1994
Project: 11-07883-10, Y-Pay-More
Date Extracts Analyzed: January 7, 1994

RESULTS FROM THE ANALYSIS OF THE AIR SAMPLE FOR TETRACHLOROETHYLENE USING EPA METHOD 8010

Results Reported as μL gas/liter air (ppm by volume)

Sample ID:	Tetrachloroethylene
VES-3	10
Quality Assurance	
Blank	<1
VES-3 (Duplicate)	9

RZA-AGRA
Environmental & Engineering Services
11135 Northeast 122nd Way
Kirkland, Washington 98034-6918
(206) 820-4669/FAX (206) 821-3914

NO 01610

Chain of Custody Record / Analysis Request

Project Name: Y-PAY-MORE Job No.: 11-07883-10
Project Manager: DALE KRAMER Phone #: 820 4669
Sampler: MARK JOHNSTON

Analysis Requested: (write preferred method in box) 100694 1:52

RZA-AGRA Sample ID	Lab Samp ID	Date Collected	Time Collected	Matrix (S=soil, W=water, A=air)	# Containers/Preservation: 40 ml VOA /	1 L Glass /	8 oz Glass /	TEDLAR BAG			CHILL	PCE	Hold for Further Analysis	RUSH (see below)
VES-3	4661 30/21	1-6-94	1205	A				X				X		

RELINQUISHED BY SAMPLER:	RELINQUISHED BY:	RELINQUISHED BY:
Signature: [signature]	Signature:	Signature:
Printed Name: MARK T JOHNSTON	Printed Name:	Printed Name:
Firm: RZA-AGRA	Firm:	Firm:
Date/Time: 1-6-94 1340	Date/Time:	Date/Time:
RECEIVED BY:	RECEIVED BY:	RECEIVED BY:
Signature: [signature]	Signature:	Signature:
Printed Name: [illegible]	Printed Name:	Printed Name:
Firm: [illegible]	Firm:	Firm:
Date/Time: 100694/1:47	Date/Time:	Date/Time:

LABORATORY:
Total # Containers:
Condition of Containers?
Condition of Seals?

Special Handling
Turnaround:
- ☐ 8 hour
- ☐ 24 hour
- ☐ 5 business day
- ☐ 10 business day
- ☐ other _____ (#)business day

PURPOSE OF SAMPLING / COMMENTS:
2 Bags - Duplicate Samples

Form 100B

DISTRIBUTION: WHITE - return to originator; YELLOW - lab; PINK - retained by originator; GOLDENROD - to lab in advance

FRIEDMAN & BRUYA, INC.

ENVIRONMENTAL CHEMISTS

Date of Report: March 7, 1994 February
Date Received: March 25, 1994
Project: 11-7883-11, Y-Pay-Mor
Date Extracts Analyzed: February 28, 1994

RESULTS FROM THE ANALYSIS OF AIR SAMPLES FOR TETRACHLOROETHYLENE USING EPA METHOD 601

Results Reported as µL/L vol/vol (ppm)

Sample ID	Tetrachloroethylene
7883-A1	3
7883-A2	<1

Quality Assurance

Blank	<1

FRIEDMAN & BRUYA, INC.

ENVIRONMENTAL CHEMISTS

Date of Report: March 7, 1994
Date Received: March 25, 1994
Project: 11-7883-11, Y-Pay-Mor

RESULTS FROM THE ANALYSIS OF WATER SAMPLES FOR TETRACHLOROETHYLENE USING EPA METHOD 601

Results Reported as µg/L (ppb)

Sample ID	Tetrachloroethylene	Internal Standard (% Recovery)
MW-3	0.5	105%
Quality Assurance		
Blank	<0.1	84%
MW-3 (Duplicate)	0.6	104%
Spike Blank % Recovery	101%	101%
Spike Level	100	

RZA AGRA, Inc.
Engineering & Environmental Services
11335 N.E. 122nd Way, Suite 100
Kirkland, Washington 98034
(206) 820-4669 FAX (206) 821-3914

11709

Chain of Custody Record / Analysis Request

Project Name: X-Ray-Thor Job No.: 11-1883-11
Project Manager: Dale Kramer Phone #: 8204669
Sampler: Jeff LaSpar

Analysis Requested: (circle, check box or write preferred method in box)

RZA AGRA, Inc. Sample ID	Lab Samp ID	Date Collected	Time Collected	Matrix (S=soil, W=water, A=air)	# Containers/Preservation: 40 ml VOA /	1 L Glass /	8 oz Glass /	Tedlar bag			CHILL	BTEX by EPA 8020 Soil / EPA 602 Water	WTPH-G	BTEX / WTPH-G	WTPH-HCID	WTPH-D	TPH by EPA 8015 Mod.	WTPH-418.1 Modified	TPH by EPA 418.1	LEAD EPA 6010 7420 Total / Dissolved EPA 7421 7421 Soil Water	TOTAL METALS	TCLP EPA 1311	PCBs EPA 8080 Soil EPA 608 Water	VOCs EPA 8010 8020 Soil EPA 601 602 Water	GC/MS EPA 8240 Volatiles	GC/MS EPA 8270 Semi-volatiles	PCE		Hold for Further Analysis	RUSH (see below)
1883-A1	47837	2/25/94	11:40	A				1																			X		X	
1883-A2	47832	2/25/94	11:55	A				1																			X		X	
MW-3	47832	2/25/94	12:30	W	3						X														X				X	

Sample MW-3, looking for PCE, do GC/MS analysis
Want 0.1 ppb detection limit. per Dale Kramer
2/28/94 SHZ

RELINQUISHED BY SAMPLER:	RELINQUISHED BY:	RELINQUISHED BY:
Signature:	Signature:	Signature:
Printed Name: Jeffrey LaSpar	Printed Name:	Printed Name:
Firm: RZA AGRA	Firm:	Firm:
Date/Time: 2/25/94 2:25	Date/Time:	Date/Time:
RECEIVED BY:	**RECEIVED BY:**	**RECEIVED BY:**
Signature:	Signature:	Signature:
Printed Name: Charles Ray	Printed Name:	Printed Name:
Firm: FIBT	Firm:	Firm:
Date/Time: 02/26/94 2:20	Date/Time:	Date/Time:

LABORATORY: Friedman Bruya
Total # Containers:
Condition of Containers?
Condition of Seals?

Special Handling
Turnaround:
- ☐ 8 hour
- ☐ 24 hour
- ☐ 5 business day
- ☑ 10 business day
- ☐ other _____ (#)business day

PURPOSE OF SAMPLING / COMMENTS:

Form 100A

DISTRIBUTION: WHITE - return to originator; YELLOW - lab; PINK - retained by originator; GOLDENROD - to lab in advance

FRIEDMAN & BRUYA, INC.

ENVIRONMENTAL CHEMISTS

Date of Report: May 25, 1994
Date Received: May 19, 1994
Project: 7883-11, Y-Pay-Mor

RESULTS FROM THE ANALYSIS OF AIR SAMPLES FOR TETRACHLOROETHYLENE USING EPA METHOD 601

Results Reported as µL/L (ppm by volume)

Sample ID	Tetrachloroethylene
VES 3A, Influent Before Carbon	13
VES 3C, Influent Before Carbon	5
VES Effluent	4

Quality Assurance

Blank	<1
100 ppm Continuing Calibration	113%

RZA AGRA, Inc.
Engineering & Environmental Services
11335 N.E. 122nd Way, Suite 100
Kirkland, Washington 98034
(206) 820-4669 FAX (206) 821-3914

11832

Chain of Custody Record / Analysis Request

Project Name: U. PAY. MOR Job No.: 7883-11
Project Manager: DALE A. KRAMER Phone #: 820-4669
Sampler: DALE A. KRAMER

Analysis Requested: (circle, check box or write preferred method in box)

RZA AGRA, Inc. Sample ID	Lab Samp ID	Date Collected	Time Collected	Matrix (S=soil, W=water, A=air)	# Containers/Preservation: 40 ml VOA /	1 L Glass /	8 oz Glass /	TDLAR			CHILL	BTEX by EPA 8020 Soil / EPA 602 Water	WTPH-G	BTEX / WTPH-G	WTPH-HCID	WTPH-D	TPH by EPA 8015 Mod.	WTPH-418.1 Modified	TPH by EPA 418.1	LEAD EPA 6010 7420 7421 Soil / Total / Dissolved EPA 7421 Water	TOTAL METALS	TCLP EPA 1311	PCBs EPA 8080 Soil / EPA 608 Water	VOCs EPA 8010 8020 Soil / EPA 601 602 Water	GC/MS EPA 8240 Volatiles	GC/MS EPA 8270 Semi-volatiles	PE 601	Hold for Further Analysis	RUSH (see below)
VES 3 A INFLUENT BEFORE CARBON	49805	5-19-94	1029																								X		
VES 3 B "	49806	"	1107																								X	X	
VES 3 C "	49807	"	1145																								X		
VES EFFLUENT	49808	"	1145																										

RELINQUISHED BY SAMPLER:	RELINQUISHED BY:	RELINQUISHED BY:
Signature: Dale A. Kramer	Signature: Kim Hazard	Signature:
Printed Name: DALE A. KRAMER	Printed Name: Kim Hazard	Printed Name:
Firm: RZA AGRA	Firm: RZA AGRA	Firm:
Date/Time: 5-19-94 1330	Date/Time: 5-19-94 1335	Date/Time:
RECEIVED BY:	**RECEIVED BY:**	**RECEIVED BY:**
Signature: Kim Hazard	Signature: Kathy Miller	Signature:
Printed Name: Kim Hazard	Printed Name: Kathy Miller	Printed Name:
Firm: RZA AGRA	Firm: FTBL	Firm:
Date/Time: 5-19-94 1330	Date/Time: 5/19/94 3:30	Date/Time:

LABORATORY: Friedman Bruya
Total # Containers: 4
Condition of Containers? good
Condition of Seals? good

Special Handling
Turnaround:
- ☐ 8 hour
- ☐ 24 hour
- ☐ 5 business day
- ☐ 10 business day
- ☐ other _____ (#)business day

PURPOSE OF SAMPLING / COMMENTS:
need results by end of Tuesday 5-24-94

Form 100A

DISTRIBUTION: WHITE - return to originator; YELLOW - lab; PINK - retained by originator; GOLDENROD - to lab in advance

PAGE ____ OF ____

FRIEDMAN & BRUYA, INC.

ENVIRONMENTAL CHEMISTS

Date of Report: September 23, 1994
Date Received: September 20, 1994
Project: 11-07883-11, Y Pay More
Date Samples Extracted: September 21, 1994

RESULTS FROM THE ANALYSIS OF AIR SAMPLES FOR TETRACHLOROETHYLENE AND VINYL CHLORIDE USING EPA METHODS 8020 AND 8015

Results Reported as µL/L (ppm)

Sample ID	Tetrachloroethylene	Vinyl Chloride
INF	2	<10
EFF	<1	<10
Quality Assurance		
Blank	<1	<10
INF (Duplicate)	2	<10
100 ppm Continuing Calibration Percent Recovery	93%	89%

01-AMG

RZA AGRA, Inc.

Engineering & Environmental Services
11335 N.E. 122nd Way, Suite 100
Kirkland, Washington 98034
(206) 820-4669 FAX (206) 821-3914

12655

Chain of Custody Record / Analysis Request

09/20/94 4:30

Project Name: Jay mart
Job No.: 11-07883-11
Project Manager: Dale Kramer
Phone #: 820-4669
Sampler: [illegible]

Analysis Requested: (circle, check box or write preferred method in box)

RZA AGRA, Inc. Sample ID	Lab Samp ID	Date Collected	Time Collected	Matrix (S=soil, W=water, A=air)	# Containers/Preservation: 40 ml VOA /	1 L Glass /	8 oz Glass /	Tedlar bag			CHILL	BTEX by EPA 8020 Soil / EPA 602 Water	WTPH-G	BTEX / WTPH-G	WTPH-HCID	WTPH-D	TPH by EPA 8015 Mod.	WTPH-418.1 Modified	TPH by EPA 418.1	LEAD EPA 6010 7420 7421 Soil Total / Dissolved EPA 7421 Water	TOTAL METALS	TCLP EPA 1311	PCBs EPA 8080 Soil EPA 608 Water	VOCs EPA 8010 8020 Soil EPA 601 602 Water	GC/MS EPA 8240 Volatiles	GC/MS EPA 8270 Semi-volatiles	Vinyl chloride	PCE	Hold for Further Analysis	RUSH (see below)
INF	53118	9/20/94	12:52	A				1																			X	X		
EFF	53119	9/20/94	1:03	A				1																			X	X		

RELINQUISHED BY SAMPLER:	RELINQUISHED BY:	RELINQUISHED BY:
Signature: G. Saunders	Signature:	Signature:
Printed Name: GEOFF SAUNDERS	Printed Name:	Printed Name:
Firm: AGRA E&E	Firm:	Firm:
Date/Time: 9/20/94 4:20	Date/Time:	Date/Time:
RECEIVED BY:	RECEIVED BY:	RECEIVED BY:
Signature: Kathy Miller	Signature:	Signature:
Printed Name: Kathy Miller	Printed Name:	Printed Name:
Firm: FBI	Firm:	Firm:
Date/Time: 9/20/94 4:20	Date/Time:	Date/Time:

LABORATORY: FBI
Total # Containers:
Condition of Containers?
Condition of Seals?

Special Handling
Turnaround:
- ☐ 8 hour
- ☐ 24 hour
- ☐ 5 business day
- ☐ 10 business day
- ☐ other _____ (#)business day

PURPOSE OF SAMPLING / COMMENTS:

Form 100A

DISTRIBUTION: WHITE - return to originator; YELLOW - lab; PINK - retained by originator; GOLDENROD - to lab in advance

PAGE ____ OF ____

FRIEDMAN & BRUYA, INC.

ENVIRONMENTAL CHEMISTS

Date of Report: September 29, 1994
Date Received: September 1, 1994
Project: 11-7883011, Northwest Bldg. Corp.
Date Samples Extracted: September 13, 1994

RESULTS FROM THE ANALYSIS OF AIR SAMPLES FOR TETRACHLOROETHYLENE AND VINYL CHLORIDE BY GC/FID

Results Reported as μL/L

Sample ID	Tetrachloroethylene	Vinyl Chloride
VES3, Influent Before Carbon	36	<10
VES3, Effluent After Carbon	3	<10
Quality Assurance		
Blank	<1	<10
VES3, Effluent After Carbon (Duplicate)	4	<10
100 ppm Continuing Calibration	79%	

07-AUG-00

RZA AGRA, Inc.

Engineering & Environmental Services
11335 N.E. 122nd Way, Suite 100
Kirkland, Washington 98034
(206) 820-4669 FAX (206) 821-3914

12647

Chain of Custody Record / Analysis Request

09/01/94
2:30

Project Name: NORTHWEST ALONG. CORP Job No.: 11:7883-11
Project Manager: D.A. KRAMER Phone #: 820-4669
Sampler: DALE KRAMER

Analysis Requested: (circle, check box or write preferred method in box)

RZA AGRA, Inc. Sample ID	Lab Samp ID	Date Collected	Time Collected	Matrix (S=soil, W=water, A=air)	# Containers/Preservation: 40 ml VOA /	1 L Glass /	8 oz Glass /			CHILL	BTEX by EPA 8020 Soil / EPA 602 Water	WTPH-G	BTEX / WTPH-G	WTPH-HCID	WTPH-D	TPH by EPA 8015 Mod.	WTPH-418.1 Modified	TPH by EPA 418.1	LEAD EPA 6010 7420 7421 Soil / Total / Dissolved EPA 7421 Water	TOTAL METALS	TCLP EPA 1311	PCBs EPA 8080 Soil / EPA 608 Water	VOCs EPA 8010 8020 Soil / EPA 602 Water	GC/MS EPA 8240 Volatiles	GC/MS EPA 8270 Semi-volatiles	PCE, Vinyl Chloride		Hold for Further Analysis	RUSH (see below)
VES3, INFLUENT BEFORE CARBON		9-1-94	1104	A(1)						52465																			
VES3, EFFLUENT AFTER CARBON		9-1-94	1125	A(1)						52466																			

Look at/Minimal Value

RELINQUISHED BY SAMPLER:	RELINQUISHED BY:	RELINQUISHED BY:
Signature: Dale A. Kramer	Signature:	Signature:
Printed Name: DALE A. KRAMER	Printed Name:	Printed Name:
Firm: RZA AGRA	Firm:	Firm:
Date/Time: 9-1-94 1400 hr	Date/Time:	Date/Time:
RECEIVED BY:	RECEIVED BY:	RECEIVED BY:
Signature: Kathy Miller	Signature:	Signature:
Printed Name: Kathy Miller	Printed Name:	Printed Name:
Firm: FBI	Firm:	Firm:
Date/Time: 9/1/94 2:20	Date/Time:	Date/Time:

LABORATORY:

Total # Containers:

Condition of Containers?

Condition of Seals?

Special Handling

Turnaround:
- ☐ 8 hour
- ☐ 24 hour
- ☐ 5 business day
- ☐ 10 business day
- ☐ other _____ (#)business day

PURPOSE OF SAMPLING / COMMENTS:
Pls-Supply Chromatograms

Form 100A

DISTRIBUTION: WHITE - return to originator; YELLOW - lab; PINK - retained by originator; GOLDENROD - to lab in advance

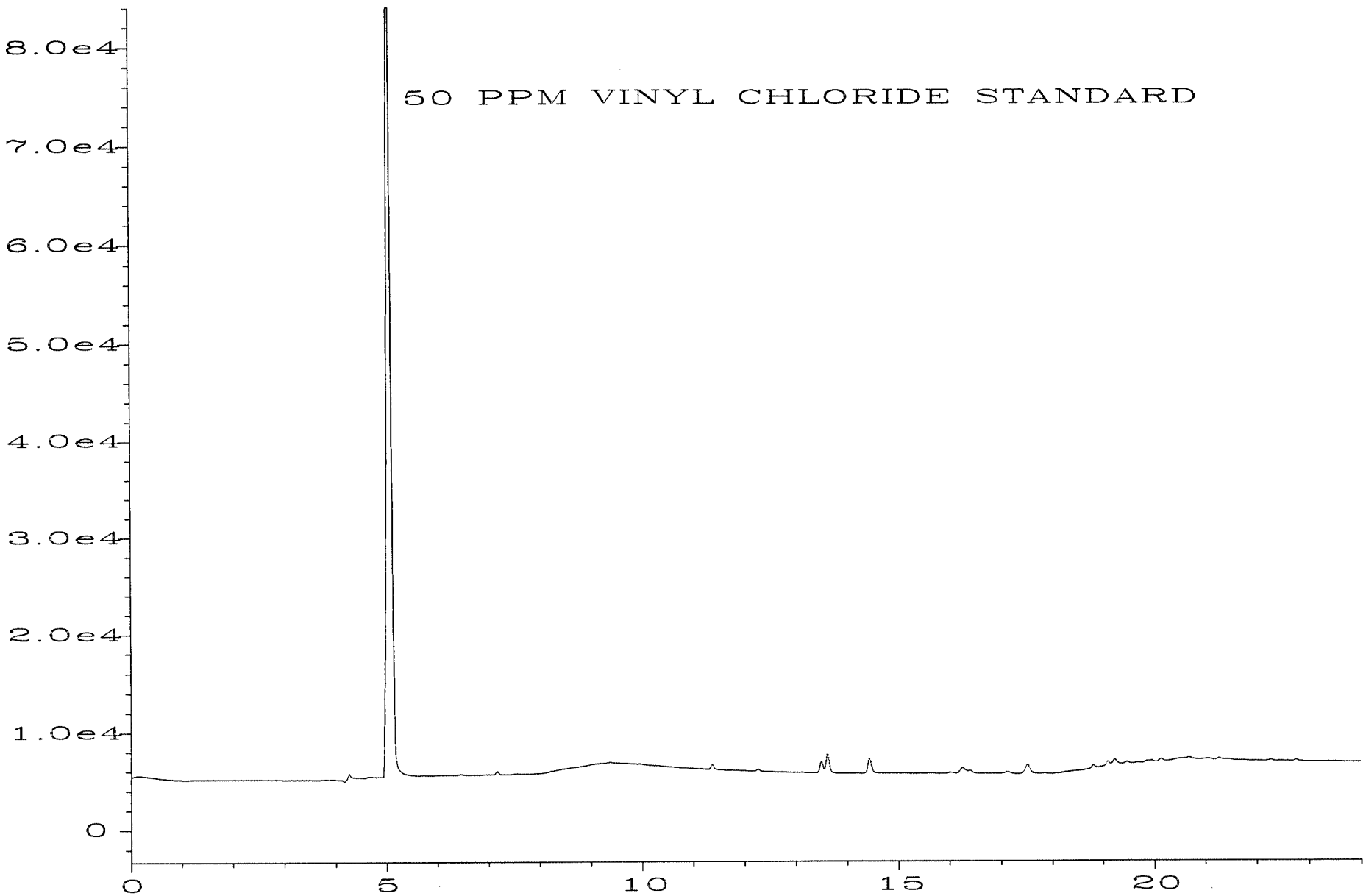

Sig. 1 in C:\HPCHEM\6\DATA\09-13-94\016F0101.D

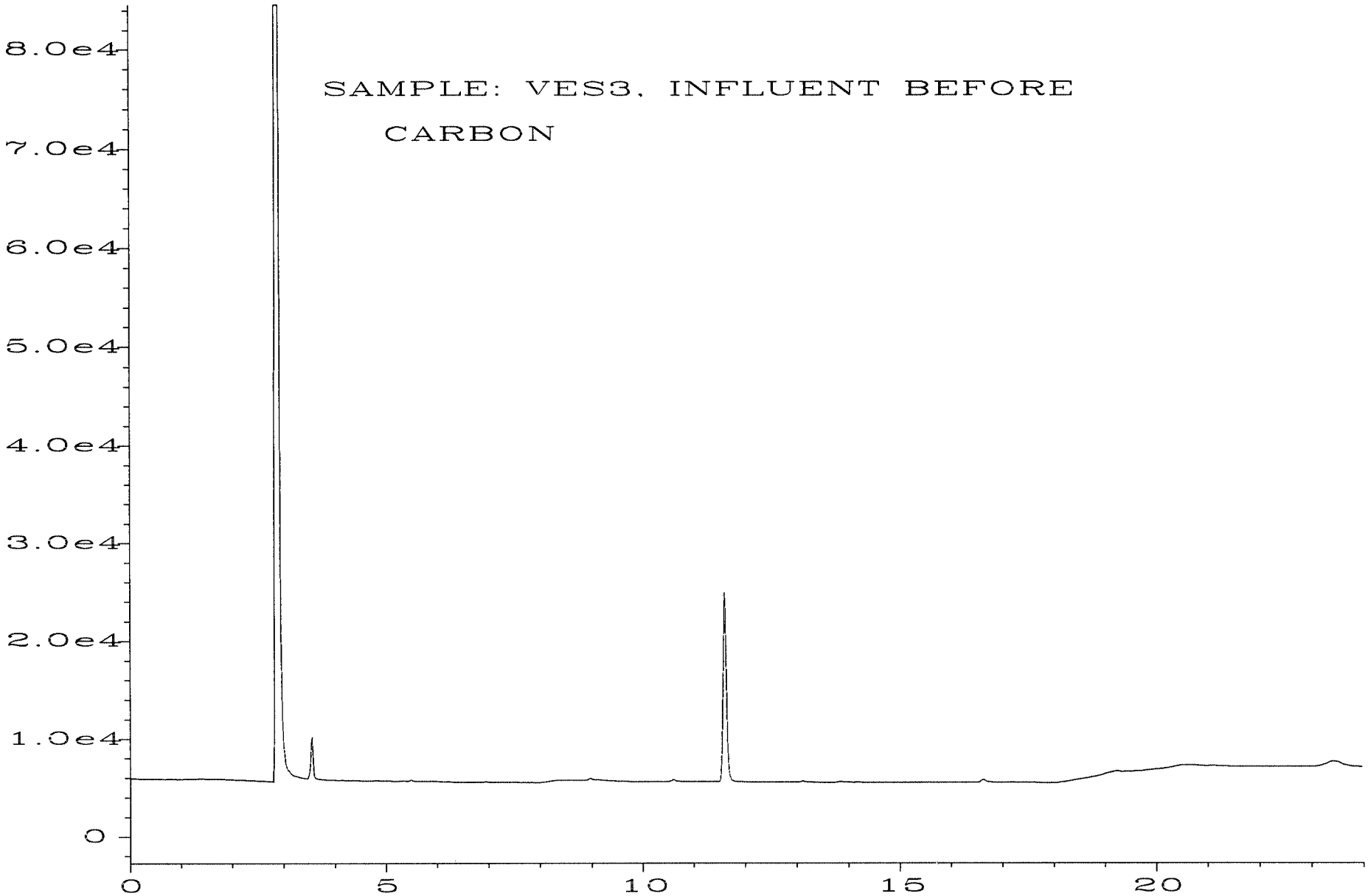

Sig. 1 in C:\HPCHEM\6\DATA\09-13-94\008F0101.D

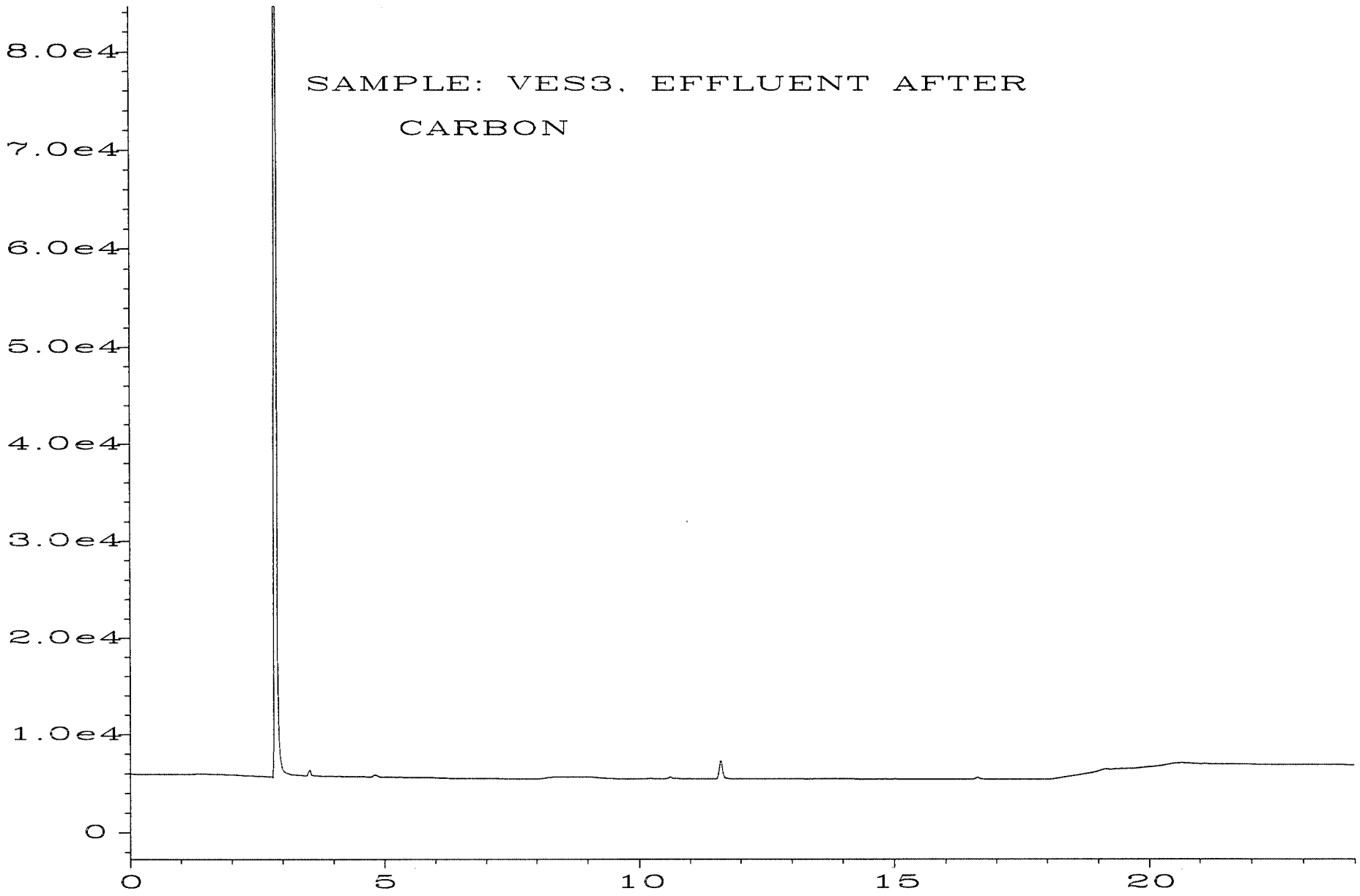

Sig. 1 in C:\HPCHEM\6\DATA\09-13-94\009F0101.D

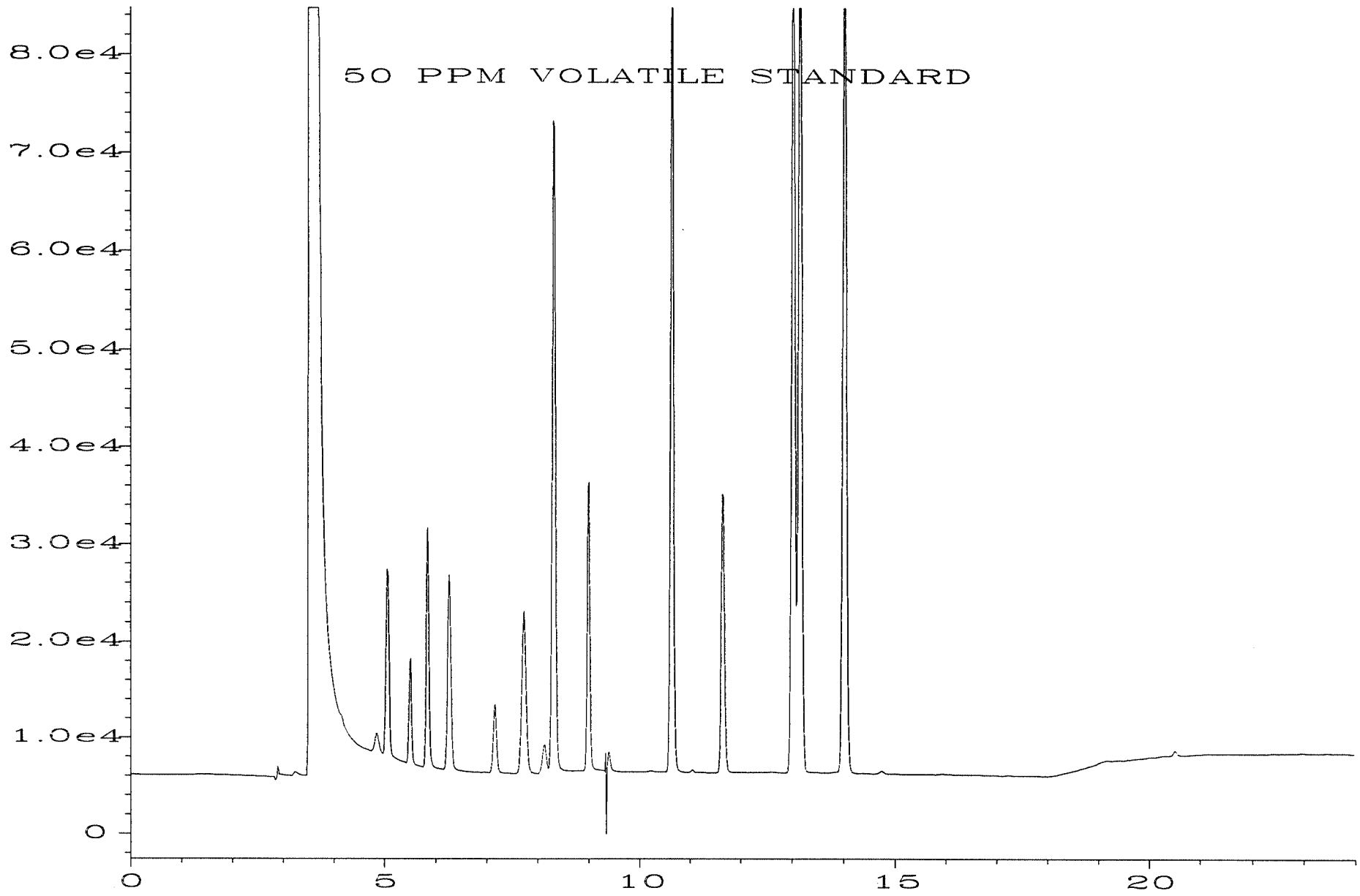

Sig. 1 in C:\HPCHEM\6\DATA\09-13-94\003F0101.D

Appendix E

APPENDIX E
GROUNDWATER ANALYTICAL TEST CERTIFICATES

1A

VOLATILE ORGANICS ANALYSIS DATA SHEET

EPA SAMPLE NO.

MW-3

Lab Name: PNELI_____ Contract: Y-PAY-MOR__

Lab Code: PNELI__ Case No.: 4518__ SAS No.: _____ SDG No.: B11_S-

Matrix: (soil/water) WATER_ Lab Sample ID: 4518-14_____

Sample wt/vol: __5.0 (g/mL) ML__ Lab File ID: A2512_____

Level: (low/med) LOW___ Date Received: 10/27/92

% Moisture: not dec. ____ Date Analyzed: 10/30/92

Column: (pack/cap) CAP___ Dilution Factor: 1.0_____

CAS NO.	COMPOUND	CONCENTRATION UNITS: (ug/L or ug/Kg) UG/L_	Q
74-87-3	Chloromethane	10	U
74-83-9	Bromomethane	10	U
75-01-4	Vinyl Chloride	10	U
75-00-3	Chloroethane	10	U
75-09-2	Methylene Chloride	5	U
67-64-1	Acetone	10	U
75-15-0	Carbon Disulfide	5	U
75-35-4	1,1-Dichloroethene	5	U
75-34-3	1,1-Dichloroethane	5	U
156-60-5	trans-1,2-Dichloroethene	5	U
156-59-2	cis-1,2-Dichloroethene	7	
67-66-3	Chloroform	5	U
107-06-2	1,2-Dichloroethane	5	U
78-93-3	2-Butanone	10	U
71-55-6	1,1,1-Trichloroethane	5	U
56-23-5	Carbon Tetrachloride	5	U
108-05-4	Vinyl Acetate	10	U
75-27-4	Bromodichloromethane	5	U
78-87-5	1,2-Dichloropropane	5	U
10061-01-5	cis-1,3-Dichloropropene	5	U
79-01-6	Trichloroethene	2	J
124-48-1	Dibromochloromethane	5	U
79-00-5	1,1,2-Trichloroethane	5	U
71-43-2	Benzene	5	U
10061-02-6	trans-1,3-Dichloropropene	5	U
75-25-2	Bromoform	5	U
108-10-1	4-Methyl-2-Pentanone	10	U
591-78-6	2-Hexanone	10	U
127-18-4	Tetrachloroethene	1	J
79-34-5	1,1,2,2-Tetrachloroethane	5	U
108-88-3	Toluene	2	J
108-90-7	Chlorobenzene	5	U
100-41-4	Ethylbenzene	5	U
100-42-5	Styrene	5	U
1330-20-7	Xylene (total)	2	J

1E

VOLATILE ORGANICS ANALYSIS DATA SHEET
TENTATIVELY IDENTIFIED COMPOUNDS

EPA SAMPLE NO.

MW-3

Lab Name: PNELI_____ Contract: Y-PAY-MOR__

Lab Code: PNELI__ Case No.: 4518__ SAS No.: _____ SDG No.: B11_S-

Matrix: (soil/water) WATER_ Lab Sample ID: 4518-14_____

Sample wt/vol: __5.0 (g/mL) ML__ Lab File ID: A2512_____

Level: (low/med) LOW___ Date Received: 10/27/92

% Moisture: not dec. ____ Date Analyzed: 10/30/92

Column (pack/cap) CAP___ Dilution Factor: 1.0_____

Number TICs found: __0

CONCENTRATION UNITS:
(ug/L or ug/Kg) UG/L_

CAS NUMBER	COMPOUND NAME	RT	EST. CONC.	Q

1A

VOLATILE ORGANICS ANALYSIS DATA SHEET

EPA SAMPLE NO.

TRIP_BLANK

Lab Name: PNELI_____ Contract: Y-PAY-MOR__

Lab Code: PNELI__ Case No.: 4518__ SAS No.: _____ SDG No.: B11_S-

Matrix: (soil/water) WATER_ Lab Sample ID: 4518-15_____

Sample wt/vol: __5.0 (g/mL) ML__ Lab File ID: A2511_____

Level: (low/med) LOW___ Date Received: 10/27/92

% Moisture: not dec. ____ Date Analyzed: 10/30/92

Column: (pack/cap) CAP___ Dilution Factor: 1.0_____

CAS NO.	COMPOUND	CONCENTRATION UNITS: (ug/L or ug/Kg) UG/L_	Q
74-87-3	Chloromethane	10	U
74-83-9	Bromomethane	10	U
75-01-4	Vinyl Chloride	10	U
75-00-3	Chloroethane	10	U
75-09-2	Methylene Chloride	3	J
67-64-1	Acetone	7	J
75-15-0	Carbon Disulfide	5	U
75-35-4	1,1-Dichloroethene	5	U
75-34-3	1,1-Dichloroethane	5	U
156-60-5	trans-1,2-Dichloroethene	5	U
156-59-2	cis-1,2-Dichloroethene	5	U
67-66-3	Chloroform	5	U
107-06-2	1,2-Dichloroethane	5	U
78-93-3	2-Butanone	10	U
71-55-6	1,1,1-Trichloroethane	5	U
56-23-5	Carbon Tetrachloride	5	U
108-05-4	Vinyl Acetate	10	U
75-27-4	Bromodichloromethane	5	U
78-87-5	1,2-Dichloropropane	5	U
10061-01-5	cis-1,3-Dichloropropene	5	U
79-01-6	Trichloroethene	5	U
124-48-1	Dibromochloromethane	5	U
79-00-5	1,1,2-Trichloroethane	5	U
71-43-2	Benzene	5	U
10061-02-6	trans-1,3-Dichloropropene	5	U
75-25-2	Bromoform	5	U
108-10-1	4-Methyl-2-Pentanone	10	U
591-78-6	2-Hexanone	10	U
127-18-4	Tetrachloroethene	5	U
79-34-5	1,1,2,2-Tetrachloroethane	5	U
108-88-3	Toluene	5	U
108-90-7	Chlorobenzene	5	U
100-41-4	Ethylbenzene	5	U
100-42-5	Styrene	5	U
1330-20-7	Xylene (total)	5	U

1E

VOLATILE ORGANICS ANALYSIS DATA SHEET
TENTATIVELY IDENTIFIED COMPOUNDS

EPA SAMPLE NO.

TRIP_BLANK

Lab Name: PNELI_____ Contract: Y-PAY-MOR__

Lab Code: PNELI__ Case No.: 4518__ SAS No.: _____ SDG No.: B11_S-

Matrix: (soil/water) WATER_ Lab Sample ID: 4518-15_____

Sample wt/vol: __5.0 (g/mL) ML__ Lab File ID: A2511_____

Level: (low/med) LOW___ Date Received: 10/27/92

% Moisture: not dec. ____ Date Analyzed: 10/30/92

Column (pack/cap) CAP___ Dilution Factor: 1.0_____

Number TICs found: __1

CONCENTRATION UNITS:
(ug/L or ug/Kg) UG/L_

CAS NUMBER	COMPOUND NAME	RT	EST. CONC.	Q
1.	Unknown siloxane	13.90	3.0	J

2A
WATER VOLATILE SURROGATE RECOVERY

Lab Name: PNELI_____ Contract: Y-PAY-MOR__ _____

Lab Code: PNELI__ Case No.: 4518__ SAS No.: _____ SDG No.: B11_S-

	EPA SAMPLE NO.	S1 (TOL) #	S2 (BFB) #	S3 (DCE) #	OTHER	TOT OUT
01	B12_H2O	85 *	91	94	0	1
02	B12_H2ODL	95	98	101	0	0
03	MW-3	90	94	97	0	0
04	TRIP_BLANK	93	90	96	0	0
05	VBLKAC	101	102	99	0	0

		QC LIMITS
S1 (TOL)	= Toluene-d8	(88-110)
S2 (BFB)	= Bromofluorobenzene	(86-115)
S3 (DCE)	= 1,2-Dichloroethane-d4	(76-114)

Column to be used to flag recovery values

* Values outside of contract required QC limits

D Surrogates diluted out

FORM II VOA-1 1/87 Rev.

2B
SOIL VOLATILE SURROGATE RECOVERY

Lab Name: PNELI_____ Contract: Y-PAY-MOR__ _____

Lab Code: PNELI__ Case No.: 4518__ SAS No.: _____ SDG No.: B11_S-

Level:(low/med) LOW___ ___

	EPA SAMPLE NO.	S1 (TOL) #	S2 (BFB) #	S3 (DCE) #	OTHER	TOT OUT
01	B11_S-3	106	93	97	0	0
02	B11_S-5	103	99	96	0	0
03	B11_S-6	97	96	96	0	0
04	B12_S-3	100	98	100	0	0
05	B12_S-36	102	99	96	0	0
06	B12_S-4	103	101	95	0	0
07	B12_S-5	101	91	95	0	0
08	VBLKBA	98	96	94	0	0
09	VBLKBB	98	97	90	0	0

		QC LIMITS
S1 (TOL)	= Toluene-d8	(81-117)
S2 (BFB)	= Bromofluorobenzene	(74-121)
S3 (DCE)	= 1,2-Dichloroethane-d4	(70-121)

Column to be used to flag recovery values

* Values outside of contract required QC limits

D Surrogates diluted out

FORM II VOA-2 1/87 Rev.

2B
SOIL VOLATILE SURROGATE RECOVERY

Lab Name: PNELI_____ Contract: Y-PAY-MOR__ _____

Lab Code: PNELI__ Case No.: 4518__ SAS No.: _____ SDG No.: B11_S-

Level:(low/med) MED___ ___

	EPA SAMPLE NO.	S1 (TOL) #	S2 (BFB) #	S3 (DCE) #	OTHER	TOT OUT
01	B12_S-1	100	113	111	0	0
02	B12_S-1DL	0 D	0 D	0 D	0	0
03	B12_S-2	103	104	112	0	0
04	B12_S-36DL	107	108	113	0	0
05	VBLKAE	101	99	97	0	0

		QC LIMITS
S1 (TOL)	= Toluene-d8	(81-117)
S2 (BFB)	= Bromofluorobenzene	(74-121)
S3 (DCE)	= 1,2-Dichloroethane-d4	(70-121)

Column to be used to flag recovery values

* Values outside of contract required QC limits

D Surrogates diluted out

FORM II VOA-2 1/87 Rev.

3A

WATER VOLATILE MATRIX SPIKE/MATRIX SPIKE DUPLICATE RECOVERY

Lab Name: PNELI_____ Contract: Y-PAY-MOR__ _____

Lab Code: PNELI__ Case No.: 4518__ SAS No.: _____ SDG No.: B11_S-

Matrix Spike - EPA Sample No.: 4522-16_____ _____

COMPOUND	SPIKE ADDED (ug/L)	SAMPLE CONCENTRATION (ug/L)	MS CONCENTRATION (ug/L)	MS % REC #	QC LIMITS REC.
1,1-Dichloroethene_____	50.00	0	53.80	108	61-145
Trichloroethene_____	50.00	0	56.90	114	71-120
Benzene_____	50.00	0	57.20	114	76-127
Toluene_____	50.00	0	58.90	118	76-125
Chlorobenzene_____	50.00	0	57.40	115	75-130

COMPOUND	SPIKE ADDED (ug/L)	MSD CONCENTRATION (ug/L)	MSD % REC #	% RPD #	QC LIMITS RPD	QC LIMITS REC.
1,1-Dichloroethene_____	50.00	53.10	106	2	14	61-145
Trichloroethene_____	50.00	52.90	106	7	14	71-120
Benzene_____	50.00	52.20	104	9	11	76-127
Toluene_____	50.00	49.50	99	18 *	13	76-125
Chlorobenzene_____	50.00	54.40	109	5	13	75-130

Column to be used to flag recovery and RPD values with an asterisk

* Values outside of QC limits

RPD: __1 out of __5 outside limits _ _
Spike Recovery: __0 out of _10 outside limits _ __

COMMENTS: 4522-16
INST.ID:HPMSD-A (30M

3B

SOIL VOLATILE MATRIX SPIKE/MATRIX SPIKE DUPLICATE RECOVERY

Lab Name: PNELI_____ Contract: Y-PAY-MOR__ _____

Lab Code: PNELI__ Case No.: 4518__ SAS No.: _____ SDG No.: B11_S-

Matrix Spike - EPA Sample No.: 4516-01_____ Level:(low/med) LOW___

COMPOUND	SPIKE ADDED (ug/Kg)	SAMPLE CONCENTRATION (ug/Kg)	MS CONCENTRATION (ug/Kg)	MS % REC #	QC LIMITS REC.
1,1-Dichloroethene_____	58.10	0	54.30	93	59-172
Trichloroethene_____	58.10	0	60.47	104	62-137
Benzene_____	58.10	0	58.14	100	66-142
Toluene_____	58.10	0	61.16	105	59-139
Chlorobenzene_____	58.10	0	62.33	107	60-133

COMPOUND	SPIKE ADDED (ug/Kg)	MSD CONCENTRATION (ug/Kg)	MSD % REC #	% RPD #	QC LIMITS RPD	QC LIMITS REC.
1,1-Dichloroethene_____	58.10	51.63	89	4	22	59-172
Trichloroethene_____	58.10	59.54	102	2	24	62-137
Benzene_____	58.10	59.07	102	2	21	66-142
Toluene_____	58.10	61.74	106	1	21	59-139
Chlorobenzene_____	58.10	62.33	107	0	21	60-133

Column to be used to flag recovery and RPD values with an asterisk

* Values outside of QC limits

RPD: __0 out of __5 outside limits _ _

Spike Recovery: __0 out of _10 outside limits _ __

COMMENTS: 4516-01
INST.ID:HPMSD-B (30M

3B

SOIL VOLATILE MATRIX SPIKE/MATRIX SPIKE DUPLICATE RECOVERY

Lab Name: PNELI_____ Contract: Y-PAY-MOR__ _____

Lab Code: PNELI__ Case No.: 4518__ SAS No.: _____ SDG No.: B11_S-

Matrix Spike - EPA Sample No.: 4511-01_____ Level:(low/med) MED___

COMPOUND	SPIKE ADDED (ug/Kg)	SAMPLE CONCENTRATION (ug/Kg)	MS CONCENTRATION (ug/Kg)	MS % REC #	QC LIMITS REC.
1,1-Dichloroethene_____	48100	0	26880	56 *	59-172
Trichloroethene_____	48100	0	26080	54 *	62-137
Benzene_____	48100	0	29310	61 *	66-142
Toluene_____	48100	0	29730	62	59-139
Chlorobenzene_____	48100	0	29500	61	60-133

COMPOUND	SPIKE ADDED (ug/Kg)	MSD CONCENTRATION (ug/Kg)	MSD % REC #	% RPD #	QC LIMITS RPD	QC LIMITS REC.
1,1-Dichloroethene_____	48100	25880	54 *	4	22	59-172
Trichloroethene_____	48100	26730	56 *	4	24	62-137
Benzene_____	48100	30080	63 *	3	21	66-142
Toluene_____	48100	31580	66	6	21	59-139
Chlorobenzene_____	48100	29150	61	0	21	60-133

Column to be used to flag recovery and RPD values with an asterisk

* Values outside of QC limits

RPD: __0 out of __5 outside limits _ _
Spike Recovery: __6 out of _10 outside limits _ __

COMMENTS: 4511-01
INST.ID:HPMSD-A (30M

4A

VOLATILE METHOD BLANK SUMMARY

Lab Name: PNELI_____ Contract: Y-PAY-MOR__ _____

Lab Code: PNELI__ Case No.: 4518__ SAS No.: _____ SDG No.: B11_S-

Lab File ID: B9341_____ Lab Sample ID: VBLKBA_____

Date Analyzed: 10/30/92 Time Analyzed: 0918____

Matrix: (soil/water) SOIL__ Level:(low/med) LOW___

Instrument ID: HPMSD-B_ _____

THIS METHOD BLANK APPLIES TO THE FOLLOWING SAMPLES, MS AND MSD:

	EPA SAMPLE NO.	LAB SAMPLE ID	LAB FILE ID	TIME ANALYZED
01	B11_S-5	4518-02	B9342	1011
02	B11_S-6	4518-06	B9343	1046
03	B12_S-3	4518-09	B9344	1120
04	B12_S-36	4518-10	B9345	1156
05	B12_S-4	4518-11	B9350	1537
06	B12_S-5	4518-12	B9347	1354

COMMENTS: VBLKBA
INST.ID:HPMSD-B (30M

NORTH CREEK ANALYTICAL

18939 120th Avenue N.E., Suite 101 • Bothell, WA 98011-2569
Phone (206) 481-9200 • FAX (206) 485-2992

RZA/AGRA	Client Project ID:	Y-PAY-MOR, W-7833-4	Sampled:	Aug 26, 1992
11335 NE 122nd Way, #100	Sample Descript:	Soil, B-10, S-1	Received:	Sep 11, 1992
Kirkland, WA 98034	Analysis Method:	EPA 8240/8260	Analyzed:	Sep 11, 1992
Attention: Dale Kramer	Sample Number:	209-0473	Reported:	Sep 14, 1992

VOLATILE ORGANICS by GC/MS (EPA 8240/8260)

Analyte	Detection Limit mg/kg (ppm)	Sample Results mg/kg (ppm)
Acetone	10	N.D.
Benzene	2.0	N.D.
Bromodichloromethane	2.0	N.D.
Bromoform	2.0	N.D.
Bromomethane	5.0	N.D.
2-Butanone	10	N.D.
Carbon disulfide	5.0	N.D.
Carbon tetrachloride	5.0	N.D.
Chlorobenzene	2.0	N.D.
Chloroethane	2.0	N.D.
2-Chloroethyl vinyl ether	5.0	N.D.
Chloroform	2.0	N.D.
Chloromethane	2.0	N.D.
Dibromochloromethane	5.0	N.D.
1,1-Dichloroethane	2.0	N.D.
1,2-Dichloroethane	2.0	N.D.
1,1-Dichloroethene	2.0	N.D.
cis 1,2-Dichloroethene	2.0	N.D.
trans 1,2-Dichloroethene	2.0	N.D.
1,2-Dichloropropane	2.0	N.D.
cis 1,3-Dichloropropene	2.0	N.D.
trans 1,3-Dichloropropene	2.0	N.D.
Ethylbenzene	2.0	N.D.
2-Hexanone	10	N.D.
Methylene chloride	10	N.D.
4-Methyl-2-pentanone	5.0	N.D.
Styrene	2.0	N.D.
1,1,2,2-Tetrachloroethane	2.0	N.D.
Tetrachloroethene	2.0	N.D.
Toluene	0.1	N.D.
1,1,1-Trichloroethane	2.0	N.D.
1,1,2-Trichloroethane	2.0	N.D.
Trichloroethene	2.0	N.D.
Trichlorofluoromethane	5.0	N.D.
Vinyl chloride	5.0	N.D.
Total Xylenes	2.0	N.D.

Analytes reported as N.D. were not present above the stated limit of detection.

NORTH CREEK ANALYTICAL inc

Steve Mayer
Project Manager

Surrogate Standards Percent Recovery:	
1,2-Dichloroethane-d4	73
Toluene-d8	98
4-Bromofluorobenzene	90

4A

VOLATILE METHOD BLANK SUMMARY

Lab Name: PNELI_____ Contract: Y-PAY-MOR__ _____

Lab Code: PNELI__ Case No.: 4518__ SAS No.: _____ SDG No.: B11_S-

Lab File ID: A2497_____ Lab Sample ID: VBLKAC_____

Date Analyzed: 10/30/92 Time Analyzed: 1021____

Matrix: (soil/water) WATER_ Level: (low/med) LOW___

Instrument ID: HPMSD-A_ _____

THIS METHOD BLANK APPLIES TO THE FOLLOWING SAMPLES, MS AND MSD:

	EPA SAMPLE NO.	LAB SAMPLE ID	LAB FILE ID	TIME ANALYZED
01	B12_H20	4518-13	A2513	1919
02	MW-3	4518-14	A2512	1843
03	TRIP_BLANK	4518-15	A2511	1808

COMMENTS: VBLKAC
INST.ID:HPMSD-A (30M

4A

VOLATILE METHOD BLANK SUMMARY

Lab Name: PNELI_____ Contract: Y-PAY-MOR__ _____

Lab Code: PNELI__ Case No.: 4518__ SAS No.: _____ SDG No.: B11_S-

Lab File ID: B9356_____ Lab Sample ID: VBLKBB_____

Date Analyzed: 11/02/92 Time Analyzed: 0807____

Matrix: (soil/water) SOIL__ Level:(low/med) LOW___

Instrument ID: HPMSD-B_ _____

THIS METHOD BLANK APPLIES TO THE FOLLOWING SAMPLES, MS AND MSD:

	EPA SAMPLE NO.	LAB SAMPLE ID	LAB FILE ID	TIME ANALYZED
01	B11_S-3	4518-01	B9360	1046

COMMENTS: VBLKBB
INST.ID:HPMSD-B (30M

FORM IV VOA 1/87 Rev.

4A

VOLATILE METHOD BLANK SUMMARY

Lab Name: PNELI_____ Contract: Y-PAY-MOR__ _____

Lab Code: PNELI__ Case No.: 4518__ SAS No.: _____ SDG No.: B11_S-

Lab File ID: A2517_____ Lab Sample ID: VBLKAE_____

Date Analyzed: 11/02/92 Time Analyzed: 0952____

Matrix: (soil/water) SOIL__ Level:(low/med) MED___

Instrument ID: HPMSD-A_ _____

THIS METHOD BLANK APPLIES TO THE FOLLOWING SAMPLES, MS AND MSD:

	EPA SAMPLE NO.	LAB SAMPLE ID	LAB FILE ID	TIME ANALYZED
01	B12_H2ODL	4518-13DL	A2526	1517
02	B12_S-1	4518-07	A2520	1138
03	B12_S-1DL	4518-07DL	A2524	1401
04	B12_S-2	4518-08	A2519	1104
05	B12_S-36DL	4518-10DL	A2523	1319

COMMENTS: VBLKAE
INST.ID:HPMSD-A (30M

1A

VOLATILE ORGANICS ANALYSIS DATA SHEET

EPA SAMPLE NO.

VBLKBA

Lab Name: PNELI Contract: Y-PAY-MOR

Lab Code: PNELI Case No.: 4518 SAS No.: _____ SDG No.: B11_S-

Matrix: (soil/water) SOIL Lab Sample ID: VBLKBA

Sample wt/vol: 5.0 (g/mL) G Lab File ID: B9341

Level: (low/med) LOW Date Received: _____

% Moisture: not dec. ____ Date Analyzed: 10/30/92

Column: (pack/cap) CAP Dilution Factor: 1.0

CAS NO.	COMPOUND	CONCENTRATION UNITS: (ug/L or ug/Kg) UG/KG	Q
74-87-3	Chloromethane	10	U
74-83-9	Bromomethane	10	U
75-01-4	Vinyl Chloride	10	U
75-00-3	Chloroethane	10	U
75-09-2	Methylene Chloride	5	U
67-64-1	Acetone	10	U
75-15-0	Carbon Disulfide	5	U
75-35-4	1,1-Dichloroethene	5	U
75-34-3	1,1-Dichloroethane	5	U
156-60-5	trans-1,2-Dichloroethene	5	U
156-59-2	cis-1,2-Dichloroethene	5	U
67-66-3	Chloroform	5	U
107-06-2	1,2-Dichloroethane	5	U
78-93-3	2-Butanone	10	U
71-55-6	1,1,1-Trichloroethane	5	U
56-23-5	Carbon Tetrachloride	5	U
108-05-4	Vinyl Acetate	10	U
75-27-4	Bromodichloromethane	5	U
78-87-5	1,2-Dichloropropane	5	U
10061-01-5	cis-1,3-Dichloropropene	5	U
79-01-6	Trichloroethene	5	U
124-48-1	Dibromochloromethane	5	U
79-00-5	1,1,2-Trichloroethane	5	U
71-43-2	Benzene	5	U
10061-02-6	trans-1,3-Dichloropropene	5	U
75-25-2	Bromoform	5	U
108-10-1	4-Methyl-2-Pentanone	10	U
591-78-6	2-Hexanone	10	U
127-18-4	Tetrachloroethene	5	U
79-34-5	1,1,2,2-Tetrachloroethane	5	U
108-88-3	Toluene	5	U
108-90-7	Chlorobenzene	5	U
100-41-4	Ethylbenzene	5	U
100-42-5	Styrene	5	U
1330-20-7	Xylene (total)	5	U

1E

VOLATILE ORGANICS ANALYSIS DATA SHEET
TENTATIVELY IDENTIFIED COMPOUNDS

EPA SAMPLE NO.

VBLKBA

Lab Name: PNELI_____ Contract: Y-PAY-MOR__

Lab Code: PNELI__ Case No.: 4518__ SAS No.: _____ SDG No.: B11_S-

Matrix: (soil/water) SOIL__ Lab Sample ID: VBLKBA_____

Sample wt/vol: __5.0 (g/mL) G___ Lab File ID: B9341_____

Level: (low/med) LOW___ Date Received: _____

% Moisture: not dec. ____ Date Analyzed: 10/30/92

Column (pack/cap) CAP___ Dilution Factor: 1.0_____

Number TICs found: __0

CONCENTRATION UNITS:
(ug/L or ug/Kg) UG/KG

CAS NUMBER	COMPOUND NAME	RT	EST. CONC.	Q

1A

VOLATILE ORGANICS ANALYSIS DATA SHEET

EPA SAMPLE NO.

VBLKAC

Lab Name: PNELI Contract: Y-PAY-MOR

Lab Code: PNELI Case No.: 4518 SAS No.: SDG No.: B11_S-

Matrix: (soil/water) WATER Lab Sample ID: VBLKAC

Sample wt/vol: 5.0 (g/mL) ML Lab File ID: A2497

Level: (low/med) LOW Date Received:

% Moisture: not dec. Date Analyzed: 10/30/92

Column: (pack/cap) CAP Dilution Factor: 1.0

CAS NO.	COMPOUND	CONCENTRATION UNITS: (ug/L or ug/Kg) UG/L	Q
74-87-3	Chloromethane	10	U
74-83-9	Bromomethane	10	U
75-01-4	Vinyl Chloride	10	U
75-00-3	Chloroethane	10	U
75-09-2	Methylene Chloride	5	U
67-64-1	Acetone	10	U
75-15-0	Carbon Disulfide	5	U
75-35-4	1,1-Dichloroethene	5	U
75-34-3	1,1-Dichloroethane	5	U
156-60-5	trans-1,2-Dichloroethene	5	U
156-59-2	cis-1,2-Dichloroethene	5	U
67-66-3	Chloroform	5	U
107-06-2	1,2-Dichloroethane	5	U
78-93-3	2-Butanone	10	U
71-55-6	1,1,1-Trichloroethane	5	U
56-23-5	Carbon Tetrachloride	5	U
108-05-4	Vinyl Acetate	10	U
75-27-4	Bromodichloromethane	5	U
78-87-5	1,2-Dichloropropane	5	U
10061-01-5	cis-1,3-Dichloropropene	5	U
79-01-6	Trichloroethene	5	U
124-48-1	Dibromochloromethane	5	U
79-00-5	1,1,2-Trichloroethane	5	U
71-43-2	Benzene	5	U
10061-02-6	trans-1,3-Dichloropropene	5	U
75-25-2	Bromoform	5	U
108-10-1	4-Methyl-2-Pentanone	10	U
591-78-6	2-Hexanone	10	U
127-18-4	Tetrachloroethene	5	U
79-34-5	1,1,2,2-Tetrachloroethane	5	U
108-88-3	Toluene	5	U
108-90-7	Chlorobenzene	5	U
100-41-4	Ethylbenzene	5	U
100-42-5	Styrene	5	U
1330-20-7	Xylene (total)	5	U

1E

VOLATILE ORGANICS ANALYSIS DATA SHEET
TENTATIVELY IDENTIFIED COMPOUNDS

EPA SAMPLE NO.

VBLKAC

Lab Name: PNELI_____ Contract: Y-PAY-MOR__

Lab Code: PNELI__ Case No.: 4518__ SAS No.: _____ SDG No.: B11_S-

Matrix: (soil/water) WATER_ Lab Sample ID: VBLKAC_____

Sample wt/vol: __5.0 (g/mL) ML__ Lab File ID: A2497_____

Level: (low/med) LOW___ Date Received: _____

% Moisture: not dec. ____ Date Analyzed: 10/30/92

Column (pack/cap) CAP___ Dilution Factor: 1.0_____

Number TICs found: __0

CONCENTRATION UNITS:
(ug/L or ug/Kg) UG/L_

CAS NUMBER	COMPOUND NAME	RT	EST. CONC.	Q

1A

VOLATILE ORGANICS ANALYSIS DATA SHEET

EPA SAMPLE NO.

VBLKBB

Lab Name: PNELI Contract: Y-PAY-MOR

Lab Code: PNELI Case No.: 4518 SAS No.: SDG No.: B11_S-

Matrix: (soil/water) SOIL Lab Sample ID: VBLKBB

Sample wt/vol: 5.0 (g/mL) G Lab File ID: B9356

Level: (low/med) LOW Date Received:

% Moisture: not dec. Date Analyzed: 11/02/92

Column: (pack/cap) CAP Dilution Factor: 1.0

CAS NO.	COMPOUND	CONCENTRATION UNITS: (ug/L or ug/Kg) UG/KG	Q
74-87-3	Chloromethane	10	U
74-83-9	Bromomethane	10	U
75-01-4	Vinyl Chloride	10	U
75-00-3	Chloroethane	10	U
75-09-2	Methylene Chloride	5	U
67-64-1	Acetone	10	U
75-15-0	Carbon Disulfide	5	U
75-35-4	1,1-Dichloroethene	5	U
75-34-3	1,1-Dichloroethane	5	U
156-60-5	trans-1,2-Dichloroethene	5	U
156-59-2	cis-1,2-Dichloroethene	5	U
67-66-3	Chloroform	5	U
107-06-2	1,2-Dichloroethane	5	U
78-93-3	2-Butanone	10	U
71-55-6	1,1,1-Trichloroethane	5	U
56-23-5	Carbon Tetrachloride	5	U
108-05-4	Vinyl Acetate	10	U
75-27-4	Bromodichloromethane	5	U
78-87-5	1,2-Dichloropropane	5	U
10061-01-5	cis-1,3-Dichloropropene	5	U
79-01-6	Trichloroethene	5	U
124-48-1	Dibromochloromethane	5	U
79-00-5	1,1,2-Trichloroethane	5	U
71-43-2	Benzene	5	U
10061-02-6	trans-1,3-Dichloropropene	5	U
75-25-2	Bromoform	5	U
108-10-1	4-Methyl-2-Pentanone	10	U
591-78-6	2-Hexanone	10	U
127-18-4	Tetrachloroethene	5	U
79-34-5	1,1,2,2-Tetrachloroethane	5	U
108-88-3	Toluene	5	U
108-90-7	Chlorobenzene	5	U
100-41-4	Ethylbenzene	5	U
100-42-5	Styrene	5	U
1330-20-7	Xylene (total)	5	U

1E

VOLATILE ORGANICS ANALYSIS DATA SHEET
TENTATIVELY IDENTIFIED COMPOUNDS

EPA SAMPLE NO.

VBLKBB

Lab Name: PNELI_____ Contract: Y-PAY-MOR__

Lab Code: PNELI__ Case No.: 4518__ SAS No.: _____ SDG No.: B11_S-

Matrix: (soil/water) SOIL__ Lab Sample ID: VBLKBB_____

Sample wt/vol: __5.0 (g/mL) G___ Lab File ID: B9356_____

Level: (low/med) LOW___ Date Received: _____

% Moisture: not dec. ____ Date Analyzed: 11/02/92

Column (pack/cap) CAP___ Dilution Factor: 1.0_____

Number TICs found: __0

CONCENTRATION UNITS:
(ug/L or ug/Kg) UG/KG

CAS NUMBER	COMPOUND NAME	RT	EST. CONC.	Q

1A

VOLATILE ORGANICS ANALYSIS DATA SHEET

EPA SAMPLE NO.

VBLKAE

Lab Name: PNELI Contract: Y-PAY-MOR

Lab Code: PNELI Case No.: 4518 SAS No.: _____ SDG No.: B11_S-

Matrix: (soil/water) SOIL Lab Sample ID: VBLKAE

Sample wt/vol: 4.0 (g/mL) G Lab File ID: A2517

Level: (low/med) MED Date Received: _____

% Moisture: not dec. ____ Date Analyzed: 11/02/92

Column: (pack/cap) CAP Dilution Factor: 1.0

CAS NO.	COMPOUND	CONCENTRATION UNITS: (ug/L or ug/Kg) UG/KG	Q
74-87-3	Chloromethane	1200	U
74-83-9	Bromomethane	1200	U
75-01-4	Vinyl Chloride	1200	U
75-00-3	Chloroethane	1200	U
75-09-2	Methylene Chloride	150	J
67-64-1	Acetone	1200	U
75-15-0	Carbon Disulfide	620	U
75-35-4	1,1-Dichloroethene	620	U
75-34-3	1,1-Dichloroethane	620	U
156-60-5	trans-1,2-Dichloroethene	620	U
156-59-2	cis-1,2-Dichloroethene	620	U
67-66-3	Chloroform	620	U
107-06-2	1,2-Dichloroethane	620	U
78-93-3	2-Butanone	1200	U
71-55-6	1,1,1-Trichloroethane	620	U
56-23-5	Carbon Tetrachloride	620	U
108-05-4	Vinyl Acetate	1200	U
75-27-4	Bromodichloromethane	620	U
78-87-5	1,2-Dichloropropane	620	U
10061-01-5	cis-1,3-Dichloropropene	620	U
79-01-6	Trichloroethene	620	U
124-48-1	Dibromochloromethane	620	U
79-00-5	1,1,2-Trichloroethane	620	U
71-43-2	Benzene	620	U
10061-02-6	trans-1,3-Dichloropropene	620	U
75-25-2	Bromoform	620	U
108-10-1	4-Methyl-2-Pentanone	1200	U
591-78-6	2-Hexanone	1200	U
127-18-4	Tetrachloroethene	620	U
79-34-5	1,1,2,2-Tetrachloroethane	620	U
108-88-3	Toluene	620	U
108-90-7	Chlorobenzene	620	U
100-41-4	Ethylbenzene	620	U
100-42-5	Styrene	620	U
1330-20-7	Xylene (total)	620	U

1E

VOLATILE ORGANICS ANALYSIS DATA SHEET
TENTATIVELY IDENTIFIED COMPOUNDS

EPA SAMPLE NO.

VBLKAE

Lab Name: PNELI_____ Contract: Y-PAY-MOR__

Lab Code: PNELI__ Case No.: 4518__ SAS No.: _____ SDG No.: B11_S-

Matrix: (soil/water) SOIL__ Lab Sample ID: VBLKAE_____

Sample wt/vol: __4.0 (g/mL) G___ Lab File ID: A2517_____

Level: (low/med) MED___ Date Received: _____

% Moisture: not dec. ____ Date Analyzed: 11/02/92

Column (pack/cap) CAP___ Dilution Factor: 1.0_____

Number TICs found: __0

CONCENTRATION UNITS:
(ug/L or ug/Kg) UG/KG

CAS NUMBER	COMPOUND NAME	RT	EST. CONC.	Q

8A

VOLATILE INTERNAL STANDARD AREA SUMMARY

Lab Name: PNELI_____ Contract: Y-PAY-MOR__ _____

Lab Code: PNELI__ Case No.: 4518__ SAS No.: _____ SDG No.: B11_S-

Lab File ID (Standard): A2495_____ Date Analyzed: 10/30/92

Instrument ID: HPMSD-A_ Time Analyzed: 0900____

Matrix:(soil/water) WATER_ Level:(low/med) LOW___ Column:(pack/cap) CAP___

		IS1(BCM) AREA #	RT	IS2(DFB) AREA #	RT	IS3(CBZ) AREA #	RT
	12 HOUR STD	83418	3.64	365348	5.50	286313	10.80
	UPPER LIMIT	166836		730696		572626	
	LOWER LIMIT	41709		182674		143156	
	EPA SAMPLE NO.						
01	B12_H2O	76115	3.61	330696	5.45	261272	10.63
02	MW-3	76572	3.62	331791	5.46	252694	10.62
03	TRIP_BLANK	66724	3.64	287744	5.48	212333	10.71
04	VBLKAC	79428	3.65	352536	5.50	267192	10.78

IS1 (BCM) = Bromochloromethane
IS2 (DFB) = 1,4-Difluorobenzene
IS3 (CBZ) = Chlorobenzene-d5

UPPER LIMIT = + 100%
of internal standard area.
LOWER LIMIT = - 50%
of internal standard area.

Column used to flag internal standard area values with an asterisk

FORM VIII VOA 1/87 Rev.

8A

VOLATILE INTERNAL STANDARD AREA SUMMARY

Lab Name: PNELI_____ Contract: Y-PAY-MOR__ _____

Lab Code: PNELI__ Case No.: 4518__ SAS No.: _____ SDG No.: B11_S-

Lab File ID (Standard): A2516_____ Date Analyzed: 11/02/92

Instrument ID: HPMSD-A_ Time Analyzed: 0841____

Matrix:(soil/water) SOIL__ Level:(low/med) MED___ Column:(pack/cap) CAP___

		IS1(BCM) AREA #	RT	IS2(DFB) AREA #	RT	IS3(CBZ) AREA #	RT
	12 HOUR STD	84759	3.62	341401	5.48	262988	10.72
	UPPER LIMIT	169518		682802		525976	
	LOWER LIMIT	42380		170700		131494	
	EPA SAMPLE NO.						
01	B12_H2ODL	79362	3.64	356471	5.48	283174	10.74
02	B12_S-1	75716	3.63	344018	5.48	275386	10.70
03	B12_S-1DL	82729	3.65	353711	5.50	271254	10.79
04	B12_S-2	75939	3.60	348359	5.47	279825	10.66
05	B12_S-36DL	73670	3.58	346474	5.43	271181	10.62
06	VBLKAE	88155	3.64	404900	5.50	302325	10.72

IS1 (BCM) = Bromochloromethane
IS2 (DFB) = 1,4-Difluorobenzene
IS3 (CBZ) = Chlorobenzene-d5

UPPER LIMIT = + 100%
of internal standard area.
LOWER LIMIT = - 50%
of internal standard area.

Column used to flag internal standard area values with an asterisk

FORM VIII VOA 1/87 Rev.

8A

VOLATILE INTERNAL STANDARD AREA SUMMARY

Lab Name: PNELI_____ Contract: Y-PAY-MOR__ _____

Lab Code: PNELI__ Case No.: 4518__ SAS No.: _____ SDG No.: B11_S-

Lab File ID (Standard): B9340_____ Date Analyzed: 10/30/92

Instrument ID: HPMSD-B_ Time Analyzed: 0833____

Matrix:(soil/water) SOIL__ Level:(low/med) LOW___ Column:(pack/cap) CAP___

		IS1(BCM) AREA #	RT	IS2(DFB) AREA #	RT	IS3(CBZ) AREA #	RT
	12 HOUR STD	44390	5.35	203236	6.59	152461	10.63
	UPPER LIMIT	88780		406472		304922	
	LOWER LIMIT	22195		101618		76230	
	EPA SAMPLE NO.						
01	B11_S-5	38895	5.34	189793	6.55	140169	10.60
02	B11_S-6	30780	5.35	144656	6.57	111352	10.63
03	B12_S-3	39784	5.36	188358	6.59	141830	10.64
04	B12_S-36	41281	5.38	189152	6.60	141711	10.62
05	B12_S-4	37401	5.36	170651	6.56	128094	10.61
06	B12_S-5	39989	5.38	186963	6.59	142053	10.62
07	VBLKBA	46136	5.37	209020	6.61	159461	10.63

IS1 (BCM) = Bromochloromethane
IS2 (DFB) = 1,4-Difluorobenzene
IS3 (CBZ) = Chlorobenzene-d5

UPPER LIMIT = + 100%
of internal standard area.
LOWER LIMIT = - 50%
of internal standard area.

Column used to flag internal standard area values with an asterisk

FORM VIII VOA 1/87 Rev.

8A

VOLATILE INTERNAL STANDARD AREA SUMMARY

Lab Name: PNELI_____ Contract: Y-PAY-MOR__ _____

Lab Code: PNELI__ Case No.: 4518__ SAS No.: _____ SDG No.: B11_S-

Lab File ID (Standard): B9355_____ Date Analyzed: 11/02/92

Instrument ID: HPMSD-B_ Time Analyzed: 0721____

Matrix:(soil/water) SOIL__ Level:(low/med) LOW___ Column:(pack/cap) CAP___

		IS1(BCM) AREA #	RT	IS2(DFB) AREA #	RT	IS3(CBZ) AREA #	RT
	12 HOUR STD	46274	5.32	210776	6.54	162709	10.61
	UPPER LIMIT	92548		421552		325418	
	LOWER LIMIT	23137		105388		81354	
	EPA SAMPLE NO.						
01	B11_S-3	41746	5.41	194244	6.63	141954	10.67
02	VBLKBB	52290	5.36	227139	6.60	177019	10.63

IS1 (BCM) = Bromochloromethane
IS2 (DFB) = 1,4-Difluorobenzene
IS3 (CBZ) = Chlorobenzene-d5

UPPER LIMIT = + 100%
of internal standard area.
LOWER LIMIT = - 50%
of internal standard area.

Column used to flag internal standard area values with an asterisk

FORM VIII VOA 1/87 Rev.

1A

VOLATILE ORGANICS ANALYSIS DATA SHEET

EPA SAMPLE NO.

MW-2

Lab Name: PNELI Contract: Y-PAY-MOR

Lab Code: PNELI Case No.: 4439 SAS No.: SDG No.: MW-2

Matrix: (soil/water) WATER Lab Sample ID: 4439-01

Sample wt/vol: 5.0 (g/mL) ML Lab File ID: A2223

Level: (low/med) LOW Date Received: 09/24/92

% Moisture: not dec. Date Analyzed: 10/06/92

Column: (pack/cap) CAP Dilution Factor: 1.0

CAS NO.	COMPOUND	CONCENTRATION UNITS: (ug/L or ug/Kg) UG/L	Q
74-87-3	Chloromethane	10	U
74-83-9	Bromomethane	10	U
75-01-4	Vinyl Chloride	10	U
75-00-3	Chloroethane	10	U
75-09-2	Methylene Chloride	4	J
67-64-1	Acetone	25	
75-15-0	Carbon Disulfide	5	U
75-35-4	1,1-Dichloroethene	5	U
75-34-3	1,1-Dichloroethane	5	U
156-60-5	trans-1,2-Dichloroethene	5	U
156-59-2	cis-1,2-Dichloroethene	5	U
67-66-3	Chloroform	5	U
107-06-2	1,2-Dichloroethane	5	U
78-93-3	2-Butanone	10	U
71-55-6	1,1,1-Trichloroethane	5	U
56-23-5	Carbon Tetrachloride	5	U
108-05-4	Vinyl Acetate	10	U
75-27-4	Bromodichloromethane	5	U
78-87-5	1,2-Dichloropropane	5	U
10061-01-5	cis-1,3-Dichloropropene	5	U
79-01-6	Trichloroethene	5	U
124-48-1	Dibromochloromethane	5	U
79-00-5	1,1,2-Trichloroethane	5	U
71-43-2	Benzene	5	U
10061-02-6	trans-1,3-Dichloropropene	5	U
75-25-2	Bromoform	5	U
108-10-1	4-Methyl-2-Pentanone	10	U
591-78-6	2-Hexanone	10	U
127-18-4	Tetrachloroethene	5	U
79-34-5	1,1,2,2-Tetrachloroethane	5	U
108-88-3	Toluene	5	U
108-90-7	Chlorobenzene	5	U
100-41-4	Ethylbenzene	5	U
100-42-5	Styrene	5	U
1330-20-7	Xylene (total)	5	U

1E

VOLATILE ORGANICS ANALYSIS DATA SHEET
TENTATIVELY IDENTIFIED COMPOUNDS

EPA SAMPLE NO.

MW-2

Lab Name: PNELI Contract: Y-PAY-MOR

Lab Code: PNELI Case No.: 4439 SAS No.: _____ SDG No.: MW-2

Matrix: (soil/water) WATER Lab Sample ID: 4439-01

Sample wt/vol: 5.0 (g/mL) ML Lab File ID: A2223

Level: (low/med) LOW Date Received: 09/24/92

% Moisture: not dec. ____ Date Analyzed: 10/06/92

Column (pack/cap) CAP Dilution Factor: 1.0

Number TICs found: 3

CONCENTRATION UNITS:
(ug/L or ug/Kg) UG/L

CAS NUMBER	COMPOUND NAME	RT	EST. CONC.	Q
1.	UNKNOWN C4-ALKYLBENZENE	14.85	8.0	JN
2.	UNKNOWN TERPENONE	16.69	5.0	JN
3.	UNKNOWN TERPENONE	17.95	5.0	JN

1A
VOLATILE ORGANICS ANALYSIS DATA SHEET

EPA SAMPLE NO.

MW-2MS

Lab Name: PNELI Contract: Y-PAY-MOR

Lab Code: PNELI Case No.: 4439 SAS No.: SDG No.: MW-2

Matrix: (soil/water) WATER Lab Sample ID: 4439-01MS

Sample wt/vol: 5.0 (g/mL) ML Lab File ID: A2224

Level: (low/med) LOW Date Received: 09/24/92

% Moisture: not dec. Date Analyzed: 10/06/92

Column: (pack/cap) CAP Dilution Factor: 1.0

CAS NO.	COMPOUND	CONCENTRATION UNITS: (ug/L or ug/Kg) UG/L	Q
74-87-3	Chloromethane	10	U
74-83-9	Bromomethane	10	U
75-01-4	Vinyl Chloride	10	U
75-00-3	Chloroethane	10	U
75-09-2	Methylene Chloride	3	J
67-64-1	Acetone	25	
75-15-0	Carbon Disulfide	5	U
75-35-4	1,1-Dichloroethene	5	U
75-34-3	1,1-Dichloroethane	5	U
156-60-5	trans-1,2-Dichloroethene	5	U
156-59-2	cis-1,2-Dichloroethene	5	U
67-66-3	Chloroform	5	U
107-06-2	1,2-Dichloroethane	5	U
78-93-3	2-Butanone	5	J
71-55-6	1,1,1-Trichloroethane	5	U
56-23-5	Carbon Tetrachloride	5	U
108-05-4	Vinyl Acetate	0.2	J
75-27-4	Bromodichloromethane	5	U
78-87-5	1,2-Dichloropropane	5	U
10061-01-5	cis-1,3-Dichloropropene	5	U
79-01-6	Trichloroethene	5	U
124-48-1	Dibromochloromethane	5	U
79-00-5	1,1,2-Trichloroethane	5	U
71-43-2	Benzene	5	U
10061-02-6	trans-1,3-Dichloropropene	5	U
75-25-2	Bromoform	5	U
108-10-1	4-Methyl-2-Pentanone	2	J
591-78-6	2-Hexanone	10	U
127-18-4	Tetrachloroethene	5	U
79-34-5	1,1,2,2-Tetrachloroethane	5	U
108-88-3	Toluene	5	U
108-90-7	Chlorobenzene	5	U
100-41-4	Ethylbenzene	5	U
100-42-5	Styrene	5	U
1330-20-7	Xylene (total)	5	U

1A

VOLATILE ORGANICS ANALYSIS DATA SHEET

EPA SAMPLE NO.

MW-2MSD

Lab Name: PNELI Contract: Y-PAY-MOR

Lab Code: PNELI Case No.: 4439 SAS No.: _____ SDG No.: MW-2

Matrix: (soil/water) WATER Lab Sample ID: 4439-01MSD

Sample wt/vol: 5.0 (g/mL) ML Lab File ID: A2225

Level: (low/med) LOW Date Received: 09/24/92

% Moisture: not dec. ____ Date Analyzed: 10/06/92

Column: (pack/cap) CAP Dilution Factor: 1.0

CAS NO.	COMPOUND	CONCENTRATION UNITS: (ug/L or ug/Kg) UG/L	Q
74-87-3	Chloromethane	10	U
74-83-9	Bromomethane	10	U
75-01-4	Vinyl Chloride	10	U
75-00-3	Chloroethane	10	U
75-09-2	Methylene Chloride	3	J
67-64-1	Acetone	24	
75-15-0	Carbon Disulfide	5	U
75-35-4	1,1-Dichloroethene	5	U
75-34-3	1,1-Dichloroethane	5	U
156-60-5	trans-1,2-Dichloroethene	5	U
156-59-2	cis-1,2-Dichloroethene	5	U
67-66-3	Chloroform	5	U
107-06-2	1,2-Dichloroethane	5	U
78-93-3	2-Butanone	4	J
71-55-6	1,1,1-Trichloroethane	5	U
56-23-5	Carbon Tetrachloride	5	U
108-05-4	Vinyl Acetate	0.1	J
75-27-4	Bromodichloromethane	5	U
78-87-5	1,2-Dichloropropane	5	U
10061-01-5	cis-1,3-Dichloropropene	5	U
79-01-6	Trichloroethene	5	U
124-48-1	Dibromochloromethane	5	U
79-00-5	1,1,2-Trichloroethane	5	U
71-43-2	Benzene	5	U
10061-02-6	trans-1,3-Dichloropropene	5	U
75-25-2	Bromoform	5	U
108-10-1	4-Methyl-2-Pentanone	10	U
591-78-6	2-Hexanone	10	U
127-18-4	Tetrachloroethene	5	U
79-34-5	1,1,2,2-Tetrachloroethane	5	U
108-88-3	Toluene	5	U
108-90-7	Chlorobenzene	5	U
100-41-4	Ethylbenzene	5	U
100-42-5	Styrene	5	U
1330-20-7	Xylene (total)	5	U

2A
WATER VOLATILE SURROGATE RECOVERY

Lab Name: PNELI_____ Contract: Y-PAY-MOR__ _____

Lab Code: PNELI__ Case No.: 4439__ SAS No.: _____ SDG No.: MW-2__

	EPA SAMPLE NO.	S1 (TOL)#	S2 (BFB)#	S3 (DCE)#	OTHER	TOT OUT
01	MW-2	96	91	94	0	0
02	MW-2MS	104	95	96	0	0
03	MW-2MSD	104	92	93	0	0
04	VBLKAJ	107	96	90	0	0

		QC LIMITS
S1 (TOL)	= Toluene-d8	(88-110)
S2 (BFB)	= Bromofluorobenzene	(86-115)
S3 (DCE)	= 1,2-Dichloroethane-d4	(76-114)

Column to be used to flag recovery values

* Values outside of contract required QC limits

D Surrogates diluted out

3A

WATER VOLATILE MATRIX SPIKE/MATRIX SPIKE DUPLICATE RECOVERY

Lab Name: PNELI_____ Contract: Y-PAY-MOR__ _____

Lab Code: PNELI__ Case No.: 4439__ SAS No.: _____ SDG No.: MW-2__

Matrix Spike - EPA Sample No.: MW-2_____ ____

COMPOUND	SPIKE ADDED (ug/L)	SAMPLE CONCENTRATION (ug/L)	MS CONCENTRATION (ug/L)	MS % REC #	QC LIMITS REC.
1,1-Dichloroethene_____	50.0	0	43.9	88	61-145
Trichloroethene_____	50.0	0	50.5	101	71-120
Benzene_____	50.0	0	53.4	107	76-127
Toluene_____	50.0	0	63.1	126 *	76-125
Chlorobenzene_____	50.0	0	53.7	107	75-130

COMPOUND	SPIKE ADDED (ug/L)	MSD CONCENTRATION (ug/L)	MSD % REC #	% RPD #	QC LIMITS RPD	QC LIMITS REC.
1,1-Dichloroethene_____	50.0	44.8	90	-2	14	61-145
Trichloroethene_____	50.0	52.8	106	-5	14	71-120
Benzene_____	50.0	54.5	109	-2	11	76-127
Toluene_____	50.0	62.8	126 *	0	13	76-125
Chlorobenzene_____	50.0	53.7	107	0	13	75-130

Column to be used to flag recovery and RPD values with an asterisk

* Values outside of QC limits

RPD: __0 out of __5 outside limits _ _

Spike Recovery: __2 out of _10 outside limits _ __

COMMENTS: 4439-01 MW-2
INST.ID:HPMSD-A (30M

4A

VOLATILE METHOD BLANK SUMMARY

Lab Name: PNELI_____ Contract: Y-PAY-MOR__ _____

Lab Code: PNELI__ Case No.: 4439__ SAS No.: _____ SDG No.: MW-2__

Lab File ID: A2222_____ Lab Sample ID: VBLKAJ_____

Date Analyzed: 10/06/92 Time Analyzed: 0726____

Matrix: (soil/water) WATER_ Level:(low/med) LOW___

Instrument ID: HPMSD-A_ _____

THIS METHOD BLANK APPLIES TO THE FOLLOWING SAMPLES, MS AND MSD:

	EPA SAMPLE NO.	LAB SAMPLE ID	LAB FILE ID	TIME ANALYZED
01	MW-2	4439-01	A2223	0819
02	MW-2MS	4439-01MS	A2224	0859
03	MW-2MSD	4439-01MSD	A2225	0940

COMMENTS: VBLKAJ
INST.ID:HPMSD-A (30M

1A

VOLATILE ORGANICS ANALYSIS DATA SHEET

EPA SAMPLE NO.

VBLKAJ

Lab Name: PNELI Contract: Y-PAY-MOR

Lab Code: PNELI Case No.: 4439 SAS No.: _____ SDG No.: MW-2

Matrix: (soil/water) WATER Lab Sample ID: VBLKAJ

Sample wt/vol: 5.0 (g/mL) ML Lab File ID: A2222

Level: (low/med) LOW Date Received: _____

% Moisture: not dec. ____ Date Analyzed: 10/06/92

Column: (pack/cap) CAP Dilution Factor: 1.0

CAS NO.	COMPOUND	CONCENTRATION UNITS: (ug/L or ug/Kg) UG/L	Q
74-87-3	Chloromethane	10	U
74-83-9	Bromomethane	10	U
75-01-4	Vinyl Chloride	10	U
75-00-3	Chloroethane	10	U
75-09-2	Methylene Chloride	5	U
67-64-1	Acetone	10	U
75-15-0	Carbon Disulfide	5	U
75-35-4	1,1-Dichloroethene	5	U
75-34-3	1,1-Dichloroethane	5	U
156-60-5	trans-1,2-Dichloroethene	5	U
156-59-2	cis-1,2-Dichloroethene	5	U
67-66-3	Chloroform	5	U
107-06-2	1,2-Dichloroethane	5	U
78-93-3	2-Butanone	10	U
71-55-6	1,1,1-Trichloroethane	5	U
56-23-5	Carbon Tetrachloride	5	U
108-05-4	Vinyl Acetate	10	U
75-27-4	Bromodichloromethane	5	U
78-87-5	1,2-Dichloropropane	5	U
10061-01-5	cis-1,3-Dichloropropene	5	U
79-01-6	Trichloroethene	5	U
124-48-1	Dibromochloromethane	5	U
79-00-5	1,1,2-Trichloroethane	5	U
71-43-2	Benzene	5	U
10061-02-6	trans-1,3-Dichloropropene	5	U
75-25-2	Bromoform	5	U
108-10-1	4-Methyl-2-Pentanone	10	U
591-78-6	2-Hexanone	10	U
127-18-4	Tetrachloroethene	5	U
79-34-5	1,1,2,2-Tetrachloroethane	5	U
108-88-3	Toluene	5	U
108-90-7	Chlorobenzene	5	U
100-41-4	Ethylbenzene	5	U
100-42-5	Styrene	5	U
1330-20-7	Xylene (total)	5	U

1E

VOLATILE ORGANICS ANALYSIS DATA SHEET
TENTATIVELY IDENTIFIED COMPOUNDS

EPA SAMPLE NO.

VBLKAJ

Lab Name: PNELI_____ Contract: Y-PAY-MOR__

Lab Code: PNELI__ Case No.: 4439__ SAS No.: _____ SDG No.: MW-2__

Matrix: (soil/water) WATER_ Lab Sample ID: VBLKAJ_____

Sample wt/vol: __5.0 (g/mL) ML__ Lab File ID: A2222_____

Level: (low/med) LOW___ Date Received: _____

% Moisture: not dec. ____ Date Analyzed: 10/06/92

Column (pack/cap) CAP___ Dilution Factor: 1.0_____

Number TICs found: __0

CONCENTRATION UNITS:
(ug/L or ug/Kg) UG/L_

CAS NUMBER	COMPOUND NAME	RT	EST. CONC.	Q

8A

VOLATILE INTERNAL STANDARD AREA SUMMARY

Lab Name: PNELI_____ Contract: Y-PAY-MOR__ _____

Lab Code: PNELI__ Case No.: 4439__ SAS No.: _____ SDG No.: MW-2__

Lab File ID (Standard): A2221_____ Date Analyzed: 10/06/92

Instrument ID: HPMSD-A_ Time Analyzed: 0632____

Matrix:(soil/water) WATER_ Level:(low/med) LOW___ Column:(pack/cap) CAP___

		IS1(BCM) AREA	#	RT	IS2(DFB) AREA	#	RT	IS3(CBZ) AREA	#	RT
	12 HOUR STD	82307		3.48	346055		5.32	278557		10.56
	UPPER LIMIT	164614			692110			557114		
	LOWER LIMIT	41154			173028			139278		
	EPA SAMPLE NO.									
01	MW-2	82177		3.53	349092		5.37	273906		10.64
02	MW-2MS	79973		3.51	348294		5.31	272978		10.66
03	MW-2MSD	88426		3.55	353334		5.37	284229		10.71
04	VBLKAJ	87536		3.53	350765		5.35	279318		10.69

IS1 (BCM) = Bromochloromethane
IS2 (DFB) = 1,4-Difluorobenzene
IS3 (CBZ) = Chlorobenzene-d5

UPPER LIMIT = + 100%
of internal standard area.
LOWER LIMIT = - 50%
of internal standard area.

Column used to flag internal standard area values with an asterisk

FORM VIII VOA 1/87 Rev.

8A

VOLATILE INTERNAL STANDARD AREA SUMMARY

Lab Name: PNELI_____ Contract: Y-PAY-MOR__ _____

Lab Code: PNELI__ Case No.: 4439__ SAS No.: _____ SDG No.: MW-2__

Lab File ID (Standard): A2221_____ Date Analyzed: 10/06/92

Instrument ID: HPMSD-A_ Time Analyzed: 0632____

Matrix:(soil/water) WATER_ Level:(low/med) LOW___ Column:(pack/cap) CAP___

		IS1(BCM) AREA	#	RT	IS2(DFB) AREA	#	RT	IS3(CBZ) AREA	#	RT
	12 HOUR STD	82307		3.48	346055		5.32	278557		10.56
	UPPER LIMIT	164614			692110			557114		
	LOWER LIMIT	41154			173028			139278		
	EPA SAMPLE NO.									
01	MW-2	82177		3.53	349092		5.37	273906		10.64
02	MW-2MS	79973		3.51	348294		5.31	272978		10.66
03	MW-2MSD	88426		3.55	353334		5.37	284229		10.71
04	VBLKAJ	87536		3.53	350765		5.35	279318		10.69

IS1 (BCM) = Bromochloromethane
IS2 (DFB) = 1,4-Difluorobenzene
IS3 (CBZ) = Chlorobenzene-d5

UPPER LIMIT = + 100%
of internal standard area.
LOWER LIMIT = - 50%
of internal standard area.

Column used to flag internal standard area values with an asterisk

FORM VIII VOA 1/87 Rev.

NORTH CREEK ANALYTICAL

18939 120th Avenue N.E., Suite 101 • Bothell, WA 98011-2569
Phone (206) 481-9200 • FAX (206) 485-2992

RZA/AGRA	Client Project ID:	Y-PAY-MOR, #W-7883-4	Sampled:	Sep 23, 1992
11335 NE 122nd Way, #100	Sample Descript:	Water, MW-2	Received:	Sep 24, 1992
Kirkland, WA 98034	Analysis Method:	EPA 8240/8260	Analyzed:	Oct 7, 1992
Attention: Dale Kramer	Sample Number:	209-1097	Reported:	Oct 13, 1992

VOLATILE ORGANICS by GC/MS (EPA 8240/8260)

Analyte	Detection Limit µg/L (ppb)	Sample Results µg/L (ppb)
Acetone	10	N.D.
Benzene	2.0	N.D.
Bromodichloromethane	2.0	N.D.
Bromoform	2.0	N.D.
Bromomethane	2.0	N.D.
2-Butanone	10	N.D.
Carbon disulfide	2.0	N.D.
Carbon tetrachloride	2.0	N.D.
Chlorobenzene	2.0	N.D.
Chloroethane	2.0	N.D.
2-Chloroethyl vinyl ether	10	N.D.
Chloroform	2.0	N.D.
Chloromethane	2.0	N.D.
Dibromochloromethane	2.0	N.D.
1,1-Dichloroethane	2.0	N.D.
1,2-Dichloroethane	2.0	N.D.
1,1-Dichloroethene	2.0	N.D.
cis 1,2-Dichloroethene	2.0	N.D.
trans 1,2-Dichloroethene	2.0	N.D.
1,2-Dichloropropane	2.0	N.D.
cis 1,3-Dichloropropene	2.0	N.D.
trans 1,3-Dichloropropene	2.0	N.D.
Ethylbenzene	2.0	N.D.
2-Hexanone	10	N.D.
Methylene chloride	10	N.D.
4-Methyl-2-pentanone	10	N.D.
Styrene	2.0	N.D.
1,1,2,2-Tetrachloroethane	2.0	N.D.
Tetrachloroethene	2.0	N.D.
Toluene	2.0	N.D.
1,1,1-Trichloroethane	2.0	N.D.
1,1,2-Trichloroethane	2.0	N.D.
Trichloroethene	2.0	N.D.
Trichlorofluoromethane	2.0	N.D.
Vinyl chloride	2.0	N.D.
Total Xylenes	2.0	N.D.

Analytes reported as N.D. were not present above the stated limit of detection.

NORTH CREEK ANALYTICAL inc

Steven G. Mayer
Project Manager

Surrogate Standards Percent Recovery:	
1,2-Dichloroethane-d4	92
Toluene-d8	99
4-Bromofluorobenzene	86

NORTH CREEK ANALYTICAL

18939 120th Avenue N.E., Suite 101 • Bothell, WA 98011-2569
Phone (206) 481-9200 • FAX (206) 485-2992

RZA/AGRA	Client Project ID:	Y-PAY-MOR, #W-7883-4	Sampled:	Sep 23, 1992
11335 NE 122nd Way, #100	Sample Descript:	Water, Trip Blank	Received:	Sep 24, 1992
Kirkland, WA 98034	Analysis Method:	EPA 8240/8260	Analyzed:	Oct 7, 1992
Attention: Dale Kramer	Sample Number:	209-1098	Reported:	Oct 13, 1992

VOLATILE ORGANICS by GC/MS (EPA 8240/8260)

Analyte	Detection Limit µg/L (ppb)	Sample Results µg/L (ppb)
Acetone	10	N.D.
Benzene	2.0	N.D.
Bromodichloromethane	2.0	N.D.
Bromoform	2.0	N.D.
Bromomethane	2.0	N.D.
2-Butanone	10	N.D.
Carbon disulfide	2.0	N.D.
Carbon tetrachloride	2.0	N.D.
Chlorobenzene	2.0	N.D.
Chloroethane	2.0	N.D.
2-Chloroethyl vinyl ether	10	N.D.
Chloroform	2.0	N.D.
Chloromethane	2.0	N.D.
Dibromochloromethane	2.0	N.D.
1,1-Dichloroethane	2.0	N.D.
1,2-Dichloroethane	2.0	N.D.
1,1-Dichloroethene	2.0	N.D.
cis 1,2-Dichloroethene	2.0	N.D.
trans 1,2-Dichloroethene	2.0	N.D.
1,2-Dichloropropane	2.0	N.D.
cis 1,3-Dichloropropene	2.0	N.D.
trans 1,3-Dichloropropene	2.0	N.D.
Ethylbenzene	2.0	N.D.
2-Hexanone	10	N.D.
Methylene chloride	10	N.D.
4-Methyl-2-pentanone	10	N.D.
Styrene	2.0	N.D.
1,1,2,2-Tetrachloroethane	2.0	N.D.
Tetrachloroethene	2.0	N.D.
Toluene	2.0	N.D.
1,1,1-Trichloroethane	2.0	N.D.
1,1,2-Trichloroethane	2.0	N.D.
Trichloroethene	2.0	N.D.
Trichlorofluoromethane	2.0	N.D.
Vinyl chloride	2.0	N.D.
Total Xylenes	2.0	N.D.

Analytes reported as N.D. were not present above the stated limit of detection.

NORTH CREEK ANALYTICAL inc

Steven G. Mayer
Project Manager

Surrogate Standards Percent Recovery:	
1,2-Dichloroethane-d4	93
Toluene-d8	98
4-Bromofluorobenzene	97

NORTH CREEK ANALYTICAL

18939 120th Avenue N.E., Suite 101 • Bothell, WA 98011-2569
Phone (206) 481-9200 • FAX (206) 485-2992

RZA/AGRA	Client Project ID:	Y-PAY-MOR, #W-7883-4	Sampled:	Sep 23, 1992
11335 NE 122nd Way, #100	Sample Descript:	Water, Rinsate Blank	Received:	Sep 24, 1992
Kirkland, WA 98034	Analysis Method:	EPA 8240/8260	Analyzed:	Oct 7, 1992
Attention: Dale Kramer	Sample Number:	209-1099	Reported:	Oct 13, 1992

VOLATILE ORGANICS by GC/MS (EPA 8240/8260)

Analyte	Detection Limit µg/L (ppb)	Sample Results µg/L (ppb)
Acetone	10	N.D.
Benzene	2.0	N.D.
Bromodichloromethane	2.0	N.D.
Bromoform	2.0	N.D.
Bromomethane	2.0	N.D.
2-Butanone	10	N.D.
Carbon disulfide	2.0	N.D.
Carbon tetrachloride	2.0	N.D.
Chlorobenzene	2.0	N.D.
Chloroethane	2.0	N.D.
2-Chloroethyl vinyl ether	10	N.D.
Chloroform	2.0	7.3
Chloromethane	2.0	N.D.
Dibromochloromethane	2.0	N.D.
1,1-Dichloroethane	2.0	N.D.
1,2-Dichloroethane	2.0	N.D.
1,1-Dichloroethene	2.0	N.D.
cis 1,2-Dichloroethene	2.0	N.D.
trans 1,2-Dichloroethene	2.0	N.D.
1,2-Dichloropropane	2.0	N.D.
cis 1,3-Dichloropropene	2.0	N.D.
trans 1,3-Dichloropropene	2.0	N.D.
Ethylbenzene	2.0	N.D.
2-Hexanone	10	N.D.
Methylene chloride	10	N.D.
4-Methyl-2-pentanone	10	N.D.
Styrene	2.0	N.D.
1,1,2,2-Tetrachloroethane	2.0	N.D.
Tetrachloroethene	2.0	N.D.
Toluene	2.0	N.D.
1,1,1-Trichloroethane	2.0	N.D.
1,1,2-Trichloroethane	2.0	N.D.
Trichloroethene	2.0	N.D.
Trichlorofluoromethane	2.0	N.D.
Vinyl chloride	2.0	N.D.
Total Xylenes	2.0	N.D.

Analytes reported as N.D. were not present above the stated limit of detection.

NORTH CREEK ANALYTICAL inc

Steven G. Mayer
Project Manager

Surrogate Standards Percent Recovery:	
1,2-Dichloroethane-d4	93
Toluene-d8	99
4-Bromofluorobenzene	86

NORTH CREEK ANALYTICAL

18939 120th Avenue N.E., Suite 101 • Bothell, WA 98011-2569
Phone (206) 481-9200 • FAX (206) 485-2992

RZA/AGRA	Client Project ID:	Y-PAY-MOR, #W-7883-4		
11335 NE 122nd Way, #100	Sample Descript:	Method Blank		
Kirkland, WA 98034	Analysis Method:	EPA 8240/8260	Analyzed:	Oct 7, 1992
Attention: Dale Kramer	Sample Number:	BLK100792	Reported:	Oct 13, 1992

VOLATILE ORGANICS by GC/MS (EPA 8240/8260)

Analyte	Detection Limit µg/L (ppb)	Sample Results µg/L (ppb)
Acetone	10	N.D.
Benzene	2.0	N.D.
Bromodichloromethane	2.0	N.D.
Bromoform	2.0	N.D.
Bromomethane	2.0	N.D.
2-Butanone	10	N.D.
Carbon disulfide	2.0	N.D.
Carbon tetrachloride	2.0	N.D.
Chlorobenzene	2.0	N.D.
Chloroethane	2.0	N.D.
2-Chloroethyl vinyl ether	10	N.D.
Chloroform	2.0	N.D.
Chloromethane	2.0	N.D.
Dibromochloromethane	2.0	N.D.
1,1-Dichloroethane	2.0	N.D.
1,2-Dichloroethane	2.0	N.D.
1,1-Dichloroethene	2.0	N.D.
cis 1,2-Dichloroethene	2.0	N.D.
trans 1,2-Dichloroethene	2.0	N.D.
1,2-Dichloropropane	2.0	N.D.
cis 1,3-Dichloropropene	2.0	N.D.
trans 1,3-Dichloropropene	2.0	N.D.
Ethylbenzene	2.0	N.D.
2-Hexanone	10	N.D.
Methylene chloride	10	N.D.
4-Methyl-2-pentanone	10	N.D.
Styrene	2.0	N.D.
1,1,2,2-Tetrachloroethane	2.0	N.D.
Tetrachloroethene	2.0	N.D.
Toluene	2.0	N.D.
1,1,1-Trichloroethane	2.0	N.D.
1,1,2-Trichloroethane	2.0	N.D.
Trichloroethene	2.0	N.D.
Trichlorofluoromethane	2.0	N.D.
Vinyl chloride	2.0	N.D.
Total Xylenes	2.0	N.D.

Analytes reported as N.D. were not present above the stated limit of detection.

NORTH CREEK ANALYTICAL inc

Steven G. Mayer
Project Manager

Surrogate Standards Percent Recovery:	
1,2-Dichloroethane-d4	99
Toluene-d8	102
4-Bromofluorobenzene	86

NORTH CREEK ANALYTICAL

18939 120th Avenue N.E., Suite 101 • Bothell, WA 98011-2569
Phone (206) 481-9200 • FAX (206) 485-2992

RZA/AGRA	Client Project ID:	Y-PAY-MOR, #W-7883-4		Sampled:	Sep 23, 1992
11335 NE 122nd Way, #100	Sample Descript:	Water, 5 GAL Bucket		Received:	Sep 24, 1992
Kirkland, WA 98034	Analysis Method:	EPA 3810/8015 Modified		Analyzed:	Oct 7, 1992
Attention: Dale Kramer	Sample Number:	209-1100		Reported:	Oct 13, 1992

INDUSTRIAL SOLVENTS SCAN

Analyte	Detection Limit mg/L (ppm)	Sample Results mg/L (ppm)
Acetone	2,000	N.D.
Acetonitrile	5,000	N.D.
Benzene	50	N.D.
iso-Butanol	1,000	N.D.
n-Butanol	2,500	N.D.
sec-Butanol	1,000	N.D.
t-Butanol	1,000	N.D.
Carbon tetrachloride	1,000	N.D.
Chloroform	500	N.D.
Cyclohexane	50	N.D.
1, 2-Dichloroethane	500	N.D.
t-1, 2-Dichloroethene	200	N.D.
Ethanol	5,000	N.D.
Ethyl acetate	500	N.D.
Ethyl benzene	50	N.D.
Ethyl ether	100	N.D.
Hexane	50	N.D.
Methanol	5,000	N.D.
Methyl ethyl ketone	1,000	N.D.
Methyl isobutyl ketone	250	N.D.
Isopropanol	3,000	N.D.
Methyl ethyl ketone	1,000	N.D.
Methyl Isobutyl Ketone	250	N.D.
Methylene chloride	500	N.D.
iso-Octane	50	N.D.
iso-Propanol	3,000	N.D.
n-Propanol	3,000	N.D.
n-Propyl benzene	50	N.D.
Tetrachloroethylene	200	640,000
Tetrahydrofuran	500	N.D.
1, 1, 1-Trichloroethane	500	N.D.
Trichloroethylene	200	N.D.
Trichlorotrifluoroethane (Freon 113)	100	N.D.
Toluene	50	N.D.
m-Xylene	50	N.D.
o-Xylene	50	N.D.
p-Xylene	50	N.D.

Analytes reported as N.D. were not present above the stated limit of detection. Because matrix effects and/or other factors required additional sample dilution, detection limits for this sample have been raised.

NORTH CREEK ANALYTICAL inc

Please Note:
Due to the insolubility of this sample in water the above concentration is estimated.

Steven G. Mayer
Project Manager

NORTH CREEK ANALYTICAL

18939 120th Avenue N.E., Suite 101 • Bothell, WA 98011-2569
Phone (206) 481-9200 • FAX (206) 485-2992

RZA/AGRA	Client Project ID: Y-PAY-MOR, #W-7883-4	Analyst: J. Kimball
11335 NE 122nd Way, #100	EPA Method: 8240	
Kirkland, WA 98034	Sample Matrix : Water	
Attention: Dale Kramer	Units: µg/L (ppb)	Analyzed: Oct 7, 1992
	QC Sample #: 209-1098	Reported: Oct 13, 1992

QUALITY CONTROL DATA REPORT

ANALYTE	1,1-DCE	Benzene	TCE	Toluene	Chloro-benzene
Sample Conc.:	N.D.	N.D.	N.D.	N.D.	N.D.
Spike Conc. Added:	10	10	10	10	10
Conc. Matrix Spike:	6.1	9.9	9.7	9.8	9.8
Matrix Spike % Recovery:	61%	99%	97%	98%	98%
Conc. Matrix Spike Dup.:	6.1	10	9.6	10	9.8
Matrix Spike Duplicate % Recovery:	61%	100%	96%	100%	98%
Upper Control Limit %:	107	118	106	122	111
Lower Control Limit %:	69	83	81	66	86
Relative % Difference:	0%	1%	1%	2%	0%
Maximum RPD:	19	8.0	10	10	9.0

NORTH CREEK ANALYTICAL inc

Steven G. Mayer
Project Manager

% Recovery: $\frac{\text{Conc. of M.S. - Conc. of Sample}}{\text{Spike Conc. Added}} \times 100$

Relative % Difference: $\frac{\text{Conc. of M.S. - Conc. of M.S.D.}}{\text{(Conc. of M.S. + Conc. of M.S.D.) / 2}} \times 100$

1A

VOLATILE ORGANICS ANALYSIS DATA SHEET

EPA SAMPLE NO.

MW-3

Lab Name: PNELI Contract: Y-PAY-MOR

Lab Code: PNELI Case No.: 4574 SAS No.: _____ SDG No.: MW-3

Matrix: (soil/water) WATER Lab Sample ID: 4574-01

Sample wt/vol: 5.0 (g/mL) ML Lab File ID: A2639

Level: (low/med) LOW Date Received: 11/16/92

% Moisture: not dec. ____ Date Analyzed: 11/16/92

Column: (pack/cap) CAP Dilution Factor: 1.0

CAS NO.	COMPOUND	CONCENTRATION UNITS: (ug/L or ug/Kg) UG/L	Q
74-87-3	Chloromethane	10	U
74-83-9	Bromomethane	10	U
75-01-4	Vinyl Chloride	10	U
75-00-3	Chloroethane	10	U
75-09-2	Methylene Chloride	2	BJ
67-64-1	Acetone	10	U
75-15-0	Carbon Disulfide	5	U
75-35-4	1,1-Dichloroethene	5	U
75-34-3	1,1-Dichloroethane	5	U
156-60-5	trans-1,2-Dichloroethene	5	U
156-59-2	cis-1,2-Dichloroethene	9	
67-66-3	Chloroform	5	U
107-06-2	1,2-Dichloroethane	5	U
78-93-3	2-Butanone	10	U
71-55-6	1,1,1-Trichloroethane	5	U
56-23-5	Carbon Tetrachloride	5	U
108-05-4	Vinyl Acetate	10	U
75-27-4	Bromodichloromethane	5	U
78-87-5	1,2-Dichloropropane	5	U
10061-01-5	cis-1,3-Dichloropropene	5	U
79-01-6	Trichloroethene	3	J
124-48-1	Dibromochloromethane	5	U
79-00-5	1,1,2-Trichloroethane	5	U
71-43-2	Benzene	5	U
10061-02-6	trans-1,3-Dichloropropene	5	U
75-25-2	Bromoform	5	U
108-10-1	4-Methyl-2-Pentanone	10	U
591-78-6	2-Hexanone	10	U
127-18-4	Tetrachloroethene	2	J
79-34-5	1,1,2,2-Tetrachloroethane	5	U
108-88-3	Toluene	5	U
108-90-7	Chlorobenzene	5	U
100-41-4	Ethylbenzene	5	U
100-42-5	Styrene	5	U
1330-20-7	Xylene (total)	5	U

1E

VOLATILE ORGANICS ANALYSIS DATA SHEET
TENTATIVELY IDENTIFIED COMPOUNDS

EPA SAMPLE NO.

MW-3

Lab Name: PNELI_____ Contract: Y-PAY-MOR__

Lab Code: PNELI__ Case No.: 4574__ SAS No.: _____ SDG No.: MW-3__

Matrix: (soil/water) WATER_ Lab Sample ID: 4574-01_____

Sample wt/vol: __5.0 (g/mL) ML__ Lab File ID: A2639_____

Level: (low/med) LOW___ Date Received: 11/16/92

% Moisture: not dec. ____ Date Analyzed: 11/16/92

Column (pack/cap) CAP___ Dilution Factor: 1.0_____

Number TICs found: __1

CONCENTRATION UNITS:
(ug/L or ug/Kg) UG/L_

CAS NUMBER	COMPOUND NAME	RT	EST. CONC.	Q
1. 541059	Cyclotrisiloxane, hexamethyl	9.75	5.0	JN

NORTH CREEK ANALYTICAL

18939 120th Avenue N.E., Suite 101 · Bothell, WA 98011-2569
Phone (206) 481-9200 · FAX (206) 485-2992

RZA/AGRA	Client Project ID:	Why Pay More, #W-7883-7	Sampled:	Nov 13, 1992
11335 NE 122nd Way, #100	Sample Descript:	Water, MW-3	Received:	Nov 16, 1992
Kirkland, WA 98034	Analysis Method:	EPA 8240/8260	Analyzed:	Nov 17, 1992
Attention: Dale Kramer	Sample Number:	211-0521	Reported:	Nov 20, 1992

VOLATILE ORGANICS by GC/MS (EPA 8240/8260)

Analyte	Detection Limit µg/L (ppb)	Sample Results µg/L (ppb)
Acetone	10	N.D.
Benzene	2.0	N.D.
Bromodichloromethane	2.0	N.D.
Bromoform	2.0	N.D.
Bromomethane	2.0	N.D.
2-Butanone	10	N.D.
Carbon disulfide	2.0	N.D.
Carbon tetrachloride	2.0	N.D.
Chlorobenzene	2.0	N.D.
Chloroethane	2.0	N.D.
2-Chloroethyl vinyl ether	10	N.D.
Chloroform	2.0	N.D.
Chloromethane	2.0	N.D.
Dibromochloromethane	2.0	N.D.
1,1-Dichloroethane	2.0	N.D.
1,2-Dichloroethane	2.0	N.D.
1,1-Dichloroethene	2.0	N.D.
cis 1,2-Dichloroethene	2.0	6.6
trans 1,2-Dichloroethene	2.0	N.D.
1,2-Dichloropropane	2.0	N.D.
cis 1,3-Dichloropropene	2.0	N.D.
trans 1,3-Dichloropropene	2.0	N.D.
Ethylbenzene	2.0	N.D.
2-Hexanone	10	N.D.
Methylene chloride	10	N.D.
4-Methyl-2-pentanone	10	N.D.
Styrene	2.0	N.D.
1,1,2,2-Tetrachloroethane	2.0	N.D.
Tetrachloroethene	2.0	N.D.
Toluene	2.0	N.D.
1,1,1-Trichloroethane	2.0	N.D.
1,1,2-Trichloroethane	2.0	N.D.
Trichloroethene	2.0	2.3
Trichlorofluoromethane	2.0	N.D.
Vinyl chloride	2.0	N.D.
Total Xylenes	2.0	N.D.

Analytes reported as N.D. were not present above the stated limit of detection.

NORTH CREEK ANALYTICAL inc

Steven G. Mayer
Project Manager

Surrogate Standards Percent Recovery:

1,2-Dichloroethane-d4	85
Toluene-d8	97
4-Bromofluorobenzene	81

NORTH CREEK ANALYTICAL

18939 120th Avenue N.E., Suite 101 • Bothell, WA 98011-2569
Phone (206) 481-9200 • FAX (206) 485-2992

RZA/AGRA	Client Project ID:	Why Pay More, #W-7883-7	Sampled:	Nov 13, 1992
11335 NE 122nd Way, #100	Sample Descript:	Water, Trip Blank	Received:	Nov 16, 1992
Kirkland, WA 98034	Analysis Method:	EPA 8240/8260	Analyzed:	Nov 17, 1992
Attention: Dale Kramer	Sample Number:	211-0522	Reported:	Nov 20, 1992

VOLATILE ORGANICS by GC/MS (EPA 8240/8260)

Analyte	Detection Limit µg/L (ppb)	Sample Results µg/L (ppb)
Acetone	10	N.D.
Benzene	2.0	N.D.
Bromodichloromethane	2.0	N.D.
Bromoform	2.0	N.D.
Bromomethane	2.0	N.D.
2-Butanone	10	N.D.
Carbon disulfide	2.0	N.D.
Carbon tetrachloride	2.0	N.D.
Chlorobenzene	2.0	N.D.
Chloroethane	2.0	N.D.
2-Chloroethyl vinyl ether	10	N.D.
Chloroform	2.0	N.D.
Chloromethane	2.0	N.D.
Dibromochloromethane	2.0	N.D.
1,1-Dichloroethane	2.0	N.D.
1,2-Dichloroethane	2.0	N.D.
1,1-Dichloroethene	2.0	N.D.
cis 1,2-Dichloroethene	2.0	N.D.
trans 1,2-Dichloroethene	2.0	N.D.
1,2-Dichloropropane	2.0	N.D.
cis 1,3-Dichloropropene	2.0	N.D.
trans 1,3-Dichloropropene	2.0	N.D.
Ethylbenzene	2.0	N.D.
2-Hexanone	10	N.D.
Methylene chloride	10	N.D.
4-Methyl-2-pentanone	10	N.D.
Styrene	2.0	N.D.
1,1,2,2-Tetrachloroethane	2.0	N.D.
Tetrachloroethene	2.0	N.D.
Toluene	2.0	N.D.
1,1,1-Trichloroethane	2.0	N.D.
1,1,2-Trichloroethane	2.0	N.D.
Trichloroethene	2.0	N.D.
Trichlorofluoromethane	2.0	N.D.
Vinyl chloride	2.0	N.D.
Total Xylenes	2.0	N.D.

Analytes reported as N.D. were not present above the stated limit of detection.

NORTH CREEK ANALYTICAL inc

Steven G. Mayer
Project Manager

Surrogate Standards Percent Recovery:	
1,2-Dichloroethane-d4	108
Toluene-d8	97
4-Bromofluorobenzene	91

NORTH CREEK ANALYTICAL

18939 120th Avenue N.E., Suite 101 • Bothell, WA 98011-2569
Phone (206) 481-9200 • FAX (206) 485-2992

RZA/AGRA	Client Project ID:	Why Pay More, #W-7883-7		
11335 NE 122nd Way, #100	Sample Descript:	Method Blank		
Kirkland, WA 98034	Analysis Method:	EPA 8240/8260	Analyzed:	Nov 17, 1992
Attention: Dale Kramer	Sample Number:	BLK111792	Reported:	Nov 20, 1992

VOLATILE ORGANICS by GC/MS (EPA 8240/8260)

Analyte	Detection Limit µg/L (ppb)	Sample Results µg/L (ppb)
Acetone	10	N.D.
Benzene	2.0	N.D.
Bromodichloromethane	2.0	N.D.
Bromoform	2.0	N.D.
Bromomethane	2.0	N.D.
2-Butanone	10	N.D.
Carbon disulfide	2.0	N.D.
Carbon tetrachloride	2.0	N.D.
Chlorobenzene	2.0	N.D.
Chloroethane	2.0	N.D.
2-Chloroethyl vinyl ether	10	N.D.
Chloroform	2.0	N.D.
Chloromethane	2.0	N.D.
Dibromochloromethane	2.0	N.D.
1,1-Dichloroethane	2.0	N.D.
1,2-Dichloroethane	2.0	N.D.
1,1-Dichloroethene	2.0	N.D.
cis 1,2-Dichloroethene	2.0	N.D.
trans 1,2-Dichloroethene	2.0	N.D.
1,2-Dichloropropane	2.0	N.D.
cis 1,3-Dichloropropene	2.0	N.D.
trans 1,3-Dichloropropene	2.0	N.D.
Ethylbenzene	2.0	N.D.
2-Hexanone	10	N.D.
Methylene chloride	10	N.D.
4-Methyl-2-pentanone	10	N.D.
Styrene	2.0	N.D.
1,1,2,2-Tetrachloroethane	2.0	N.D.
Tetrachloroethene	2.0	N.D.
Toluene	2.0	N.D.
1,1,1-Trichloroethane	2.0	N.D.
1,1,2-Trichloroethane	2.0	N.D.
Trichloroethene	2.0	N.D.
Trichlorofluoromethane	2.0	N.D.
Vinyl chloride	2.0	N.D.
Total Xylenes	2.0	N.D.

Analytes reported as N.D. were not present above the stated limit of detection.

NORTH CREEK ANALYTICAL inc

Steven G. Mayer
Project Manager

Surrogate Standards Percent Recovery:	
1,2-Dichloroethane-d4	108
Toluene-d8	98
4-Bromofluorobenzene	89

NORTH CREEK ANALYTICAL

18939 120th Avenue N.E., Suite 101 • Bothell, WA 98011-2569
Phone (206) 481-9200 • FAX (206) 485-2992

RZA/AGRA	Client Project ID: Why Pay More, #W-7883-7	Analyst: J. Kimball
11335 NE 122nd Way, #100	EPA Method: 8240	
Kirkland, WA 98034	Sample Matrix : Water	
Attention: Dale Kramer	Units: µg/L (ppb)	Analyzed: Nov 17, 1992
	QC Sample #: 211-0470	Reported: Nov 20, 1992

QUALITY CONTROL DATA REPORT

ANALYTE	1,1-DCE	Benzene	TCE	Toluene	Chloro-benzene
Sample Conc.:	N.D.	N.D.	N.D.	N.D.	N.D.
Spike Conc. Added:	10	10	10	10	10
Conc. Matrix Spike:	10	11	11	12	11
Matrix Spike % Recovery:	100%	110%	110%	120%	110%
Conc. Matrix Spike Dup.:	11	11	12	12	12
Matrix Spike Duplicate % Recovery:	110%	110%	120%(*)	120%	120%
Upper Control Limit %:	107	119	113	124	129
Lower Control Limit %:	69	81	75	71	63
Relative % Difference:	10%	0%	9%	0%	9%
Maximum RPD:	19	7.8	6.2	6.9	16

NORTH CREEK ANALYTICAL inc

Steven G. Mayer
Project Manager

Please Note:
(*) = The Matrix Spike Recovery for this sample is outside of North Creek Analytical's established control limits.

NORTH CREEK ANALYTICAL

18939 120th Avenue N.E., Suite 101 • Bothell, WA 98011-2569
Phone (206) 481-9200 • FAX (206) 485-2992

RZA/AGRA	Client Project ID:	Y-Pay-Mor, #W-7883-6	Sampled:	Oct 28, 1992
11335 NE 122nd Way, #100	Sample Descript:	Water, B12	Received:	Oct 29, 1992
Kirkland, WA 98034	Analysis Method:	EPA 8240/8260	Analyzed:	Oct 29, 1992
Attention: Dale Kramer	Sample Number:	210-1324	Reported:	Oct 30, 1992

VOLATILE ORGANICS by GC/MS (EPA 8240/8260)

Analyte	Detection Limit µg/L (ppb)	Sample Results µg/L (ppb)
Acetone	1,000	N.D.
Benzene	200	N.D.
Bromodichloromethane	200	N.D.
Bromoform	200	N.D.
Bromomethane	200	N.D.
2-Butanone	1,000	N.D.
Carbon disulfide	200	N.D.
Carbon tetrachloride	200	N.D.
Chlorobenzene	200	N.D.
Chloroethane	200	N.D.
2-Chloroethyl vinyl ether	1,000	N.D.
Chloroform	200	N.D.
Chloromethane	200	N.D.
Dibromochloromethane	200	N.D.
1,1-Dichloroethane	200	N.D.
1,2-Dichloroethane	200	N.D.
1,1-Dichloroethene	200	N.D.
cis 1,2-Dichloroethene	200	N.D.
trans 1,2-Dichloroethene	200	N.D.
1,2-Dichloropropane	200	N.D.
cis 1,3-Dichloropropene	200	N.D.
trans 1,3-Dichloropropene	200	N.D.
Ethylbenzene	200	N.D.
2-Hexanone	1,000	N.D.
Methylene chloride	1,000	N.D.
4-Methyl-2-pentanone	1,000	N.D.
Styrene	200	N.D.
1,1,2,2-Tetrachloroethane	200	N.D.
Tetrachloroethene	200	1,700
Toluene	200	N.D.
1,1,1-Trichloroethane	200	N.D.
1,1,2-Trichloroethane	200	N.D.
Trichloroethene	200	N.D.
Trichlorofluoromethane	200	N.D.
Vinyl chloride	200	N.D.
Total Xylenes	200	N.D.

Analytes reported as N.D. were not present above the stated limit of detection. Because matrix effects and/or other factors required additional sample dilution, detection limits for this sample have been raised.

NORTH CREEK ANALYTICAL inc

Surrogate Standards Percent Recovery:

1,2-Dichloroethane-d4	92
Toluene-d8	96
4-Bromofluorobenzene	85

Steven G. Mayer
Project Manager

NORTH CREEK ANALYTICAL

18939 120th Avenue N.E., Suite 101 • Bothell, WA 98011-2569
Phone (206) 481-9200 • FAX (206) 485-2992

RZA/AGRA	Client Project ID:	Y-Pay-Mor, #W-7883-6		
11335 NE 122nd Way, #100	Sample Descript:	Method Blank		
Kirkland, WA 98034	Analysis Method:	EPA 8240/8260	Analyzed:	Oct 29, 1992
Attention: Dale Kramer	Sample Number:	BLK102992	Reported:	Oct 30, 1992

VOLATILE ORGANICS by GC/MS (EPA 8240/8260)

Analyte	Detection Limit µg/L (ppb)	Sample Results µg/L (ppb)
Acetone	10.0	N.D.
Benzene	2.0	N.D.
Bromodichloromethane	2.0	N.D.
Bromoform	2.0	N.D.
Bromomethane	2.0	N.D.
2-Butanone	10.0	N.D.
Carbon disulfide	2.0	N.D.
Carbon tetrachloride	2.0	N.D.
Chlorobenzene	2.0	N.D.
Chloroethane	2.0	N.D.
2-Chloroethyl vinyl ether	10.0	N.D.
Chloroform	2.0	N.D.
Chloromethane	2.0	N.D.
Dibromochloromethane	2.0	N.D.
1,1-Dichloroethane	2.0	N.D.
1,2-Dichloroethane	2.0	N.D.
1,1-Dichloroethene	2.0	N.D.
cis 1,2-Dichloroethene	2.0	N.D.
trans 1,2-Dichloroethene	2.0	N.D.
1,2-Dichloropropane	2.0	N.D.
cis 1,3-Dichloropropene	2.0	N.D.
trans 1,3-Dichloropropene	2.0	N.D.
Ethylbenzene	2.0	N.D.
2-Hexanone	10.0	N.D.
Methylene chloride	10.0	N.D.
4-Methyl-2-pentanone	10.0	N.D.
Styrene	2.0	N.D.
1,1,2,2-Tetrachloroethane	2.0	N.D.
Tetrachloroethene	2.0	N.D.
Toluene	2.0	N.D.
1,1,1-Trichloroethane	2.0	N.D.
1,1,2-Trichloroethane	2.0	N.D.
Trichloroethene	2.0	N.D.
Trichlorofluoromethane	2.0	N.D.
Vinyl chloride	2.0	N.D.
Total Xylenes	2.0	N.D.

Analytes reported as N.D. were not present above the stated limit of detection.

NORTH CREEK ANALYTICAL inc

Steven G. Mayer
Project Manager

Surrogate Standards Percent Recovery:	
1,2-Dichloroethane-d4	96
Toluene-d8	97
4-Bromofluorobenzene	90

NORTH CREEK ANALYTICAL

18939 120th Avenue N.E., Suite 101 • Bothell, WA 98011-2569
Phone (206) 481-9200 • FAX (206) 485-2992

RZA/AGRA 11335 NE 122nd Way, #100 Kirkland, WA 98034 Attention: Dale Kramer	Client Project ID: Y-Pay-Mor, #W-7883-6 EPA Method: 8240 Sample Matrix : Water Units: µg/L (ppb) QC Sample #: BLK102992	Analyst: J. Kimball Analyzed: Oct 29, 1992 Reported: Oct 30, 1992

QUALITY CONTROL DATA REPORT

ANALYTE	1,1-DCE	Benzene	TCE	Toluene	Chloro-benzene
Sample Conc.:	N.D.	N.D.	N.D.	N.D.	N.D.
Spike Conc. Added:	10	10	10	10	10
Conc. Matrix Spike:	6.5	10	9.7	11	10
Matrix Spike % Recovery:	65%(1)	100%	97%	110%	100%
Conc. Matrix Spike Dup.:	6.5	10	9.6	10	10
Matrix Spike Duplicate % Recovery:	65%(1)	100%	96%	100%	100%
Upper Control Limit %:	107	119	113	124	129
Lower Control Limit %:	69(1)	81	75	71	63
Relative % Difference:	0%	0%	1%	10%	0%
Maximum RPD:	19	7.8	6.2	6.9	16

NORTH CREEK ANALYTICAL inc

Steven G. Mayer
Project Manager

Please Note:
(1) = The Laboratory Control Sample is outside of North Creek Analytical's established control limits.

NORTH CREEK ANALYTICAL

18939 120th Avenue N.E., Suite 101 • Bothell, WA 98011-2569
Phone (206) 481-9200 • FAX (206) 485-2992

RZA/AGRA 11335 NE 122nd Way, #100 Kirkland, WA 98034 Attention: Dale Kramer	Client Project ID: Y-Pay-Mor, #W-7883-6 EPA Method: 8240 Sample Matrix : Water Units: µg/L (ppb) QC Sample #: BLK102992	Analyst: J. Kimball Analyzed: Oct 29, 1992 Reported: Oct 30, 1992

QUALITY CONTROL DATA REPORT

ANALYTE	1,1-DCE	Benzene	TCE	Toluene	Chloro-benzene
Sample Conc.:	N.D.	N.D.	N.D.	N.D.	N.D.
Spike Conc. Added:	10	10	10	10	10
Conc. Matrix Spike:	6.5	10	9.7	11	10
Matrix Spike % Recovery:	65%(1)	100%	97%	110%	100%
Conc. Matrix Spike Dup.:	6.5	10	9.6	10	10
Matrix Spike Duplicate % Recovery:	65%(1)	100%	96%	100%	100%
Upper Control Limit %:	107	119	113	124	129
Lower Control Limit %:	69(1)	81	75	71	63
Relative % Difference:	0%	0%	1%	10%	0%
Maximum RPD:	19	7.8	6.2	6.9	16

NORTH CREEK ANALYTICAL inc

Steven G. Mayer
Project Manager

Please Note:
(1) = The Laboratory Control Sample is outside of North Creek Analytical's established control limits.

NORTH CREEK ANALYTICAL

18939 120th Avenue N.E., Suite 101 • Bothell, WA 98011-9508 (206) 481-9200 • FAX 485-2992
East 11115 Montgomery, Suite B • Spokane, WA 99206-4779 (509) 924-9200 • FAX 924-9290
15055 S.W. Sequoia Parkway, Suite 110 • Portland, OR 97224-7155 (503) 624-9800 • FAX 684-3782

RZA/AGRA, Kirkland	Client Project ID:	Y-PAY-MOR, #11-7883-11	Sampled:	Jun 13, 1994
11335 NE 122nd Way, #100	Sample Descript:	Water, W-2	Received:	Jun 14, 1994
Kirkland, WA 98034	Analysis Method:	EPA 8240/8260	Analyzed:	Jun 16, 1994
Attention: Dale Kramer	Sample Number:	406-0602	Reported:	Jun 27, 1994

VOLATILE ORGANICS by GC/MS

Analyte	Reporting Limit µg/L (ppb)	Sample Results µg/L (ppb)
Acetone	10	N.D.
Benzene	2.0	N.D.
Bromodichloromethane	2.0	N.D.
Bromoform	2.0	N.D.
Bromomethane	10	N.D.
2-Butanone	10	N.D.
Carbon disulfide	10	N.D.
Carbon tetrachloride	5.0	N.D.
Chlorobenzene	2.0	N.D.
Chloroethane	10	N.D.
Chloroform	2.0	N.D.
Chloromethane	10	N.D.
Dibromochloromethane	2.0	N.D.
1,1-Dichloroethane	2.0	N.D.
1,2-Dichloroethane	2.0	N.D.
1,1-Dichloroethene	2.0	N.D.
cis 1,2-Dichloroethene	5.0	N.D.
trans 1,2-Dichloroethene	2.0	N.D.
1,2-Dichloropropane	2.0	N.D.
cis 1,3-Dichloropropene	2.0	N.D.
trans 1,3-Dichloropropene	2.0	N.D.
Ethylbenzene	5.0	N.D.
2-Hexanone	10	N.D.
Methylene chloride	5.0	N.D.
4-Methyl-2-pentanone	10	N.D.
Styrene	5.0	N.D.
1,1,2,2-Tetrachloroethane	5.0	N.D.
Tetrachloroethene	5.0	N.D.
Toluene	2.0	N.D.
1,1,1-Trichloroethane	5.0	N.D.
1,1,2-Trichloroethane	2.0	N.D.
Trichloroethene	2.0	N.D.
Vinyl chloride	2.0	N.D.
Total Xylenes	5.0	N.D.

Analytes reported as N.D. were not detected above the stated Reporting Limit.

NORTH CREEK ANALYTICAL Inc.

Shannon Stowell
Project Manager

Surrogate Standards Percent Recovery:		Control Limits
1,2-Dichloroethane-d4	94	76-114
Toluene-d8	99	88-110
4-Bromofluorobenzene	90	86-115

NORTH CREEK ANALYTICAL

18939 120th Avenue N.E., Suite 101 • Bothell, WA 98011-9508 (206) 481-9200 • FAX 485-2992
East 11115 Montgomery, Suite B • Spokane, WA 99206-4779 (509) 924-9200 • FAX 924-9290
15055 S.W. Sequoia Parkway, Suite 110 • Portland, OR 97224-7155 (503) 624-9800 • FAX 684-3782

RZA/AGRA, Kirkland	Client Project ID:	Y-PAY-MOR, #11-7883-11	Sampled:	Jun 13, 1994
11335 NE 122nd Way, #100	Sample Descript:	Water, W-3	Received:	Jun 14, 1994
Kirkland, WA 98034	Analysis Method:	EPA 8240/8260	Analyzed:	Jun 16, 1994
Attention: Dale Kramer	Sample Number:	406-0603	Reported:	Jun 27, 1994

VOLATILE ORGANICS by GC/MS

Analyte	Reporting Limit µg/L (ppb)	Sample Results µg/L (ppb)
Acetone	10	N.D.
Benzene	2.0	N.D.
Bromodichloromethane	2.0	N.D.
Bromoform	2.0	N.D.
Bromomethane	10	N.D.
2-Butanone	10	N.D.
Carbon disulfide	10	N.D.
Carbon tetrachloride	5.0	N.D.
Chlorobenzene	2.0	N.D.
Chloroethane	10	N.D.
Chloroform	2.0	N.D.
Chloromethane	10	N.D.
Dibromochloromethane	2.0	N.D.
1,1-Dichloroethane	2.0	N.D.
1,2-Dichloroethane	2.0	N.D.
1,1-Dichloroethene	2.0	N.D.
cis 1,2-Dichloroethene	5.0	5.4
trans 1,2-Dichloroethene	2.0	N.D.
1,2-Dichloropropane	2.0	N.D.
cis 1,3-Dichloropropene	2.0	N.D.
trans 1,3-Dichloropropene	2.0	N.D.
Ethylbenzene	5.0	N.D.
2-Hexanone	10	N.D.
Methylene chloride	5.0	N.D.
4-Methyl-2-pentanone	10	N.D.
Styrene	5.0	N.D.
1,1,2,2-Tetrachloroethane	5.0	N.D.
Tetrachloroethene	5.0	N.D.
Toluene	2.0	N.D.
1,1,1-Trichloroethane	5.0	N.D.
1,1,2-Trichloroethane	2.0	N.D.
Trichloroethene	2.0	N.D.
Vinyl chloride	2.0	N.D.
Total Xylenes	5.0	N.D.

Analytes reported as N.D. were not detected above the stated Reporting Limit.

NORTH CREEK ANALYTICAL Inc.

Laura Dutton

for Shannon Stowell
Project Manager

Surrogate Standards Percent Recovery:		Control Limits
1,2-Dichloroethane-d4	94	76-114
Toluene-d8	99	88-110
4-Bromofluorobenzene	90	86-115

NORTH CREEK ANALYTICAL

18939 120th Avenue N.E., Suite 101 • Bothell, WA 98011-9508 (206) 481-9200 • FAX 485-2992
East 11115 Montgomery, Suite B • Spokane, WA 99206-4779 (509) 924-9200 • FAX 924-9290
15055 S.W. Sequoia Parkway, Suite 110 • Portland, OR 97224-7155 (503) 624-9800 • FAX 684-3782

RZA/AGRA, Kirkland	Client Project ID:	Y-PAY-MOR, #11-7883-11		
11335 NE 122nd Way, #100	Sample Descript:	Method Blank		
Kirkland, WA 98034	Analysis Method:	EPA 8240/8260	Analyzed:	Jun 16, 1994
Attention: Dale Kramer	Sample Number:	BLK061694	Reported:	Jun 27, 1994

VOLATILE ORGANICS by GC/MS

Analyte	Reporting Limit µg/L (ppb)	Sample Results µg/L (ppb)
Acetone	10	N.D.
Benzene	2.0	N.D.
Bromodichloromethane	2.0	N.D.
Bromoform	2.0	N.D.
Bromomethane	10	N.D.
2-Butanone	10	N.D.
Carbon disulfide	10	N.D.
Carbon tetrachloride	5.0	N.D.
Chlorobenzene	2.0	N.D.
Chloroethane	10	N.D.
Chloroform	2.0	N.D.
Chloromethane	10	N.D.
Dibromochloromethane	2.0	N.D.
1,1-Dichloroethane	2.0	N.D.
1,2-Dichloroethane	2.0	N.D.
1,1-Dichloroethene	2.0	N.D.
cis 1,2-Dichloroethene	5.0	N.D.
trans 1,2-Dichloroethene	2.0	N.D.
1,2-Dichloropropane	2.0	N.D.
cis 1,3-Dichloropropene	2.0	N.D.
trans 1,3-Dichloropropene	2.0	N.D.
Ethylbenzene	5.0	N.D.
2-Hexanone	10	N.D.
Methylene chloride	5.0	N.D.
4-Methyl-2-pentanone	10	N.D.
Styrene	5.0	N.D.
1,1,2,2-Tetrachloroethane	5.0	N.D.
Tetrachloroethene	5.0	N.D.
Toluene	2.0	N.D.
1,1,1-Trichloroethane	5.0	N.D.
1,1,2-Trichloroethane	2.0	N.D.
Trichloroethene	2.0	N.D.
Vinyl chloride	2.0	N.D.
Total Xylenes	5.0	N.D.

Analytes reported as N.D. were not detected above the stated Reporting Limit.

NORTH CREEK ANALYTICAL Inc.

Laura Dutton
for Shannon Stowell
Project Manager

Surrogate Standards Percent Recovery:		Control Limits
1,2-Dichloroethane-d4	96	76-114
Toluene-d8	101	88-110
4-Bromofluorobenzene	90	86-115

NORTH CREEK ANALYTICAL

18939 120th Avenue N.E., Suite 101 • Bothell, WA 98011-9508 (206) 481-9200 • FAX 485-2992
East 11115 Montgomery, Suite B • Spokane, WA 99206-4779 (509) 924-9200 • FAX 924-9290
15055 S.W. Sequoia Parkway, Suite 110 • Portland, OR 97224-7155 (503) 624-9800 • FAX 684-3782

RZA/AGRA, Kirkland	Client Project ID: Y-PAY-MOR, #11-7883-11	Analyst: K. Wilke
11335 NE 122nd Way, #100	Sample Matrix: Water	
Kirkland, WA 98034	Analysis Method: EPA 8240	
Attention: Dale Kramer	Units: µg/L (ppb)	Analyzed: Jun 16, 1994
	QC Sample #: 406-0068	Reported: Jun 27, 1994

MATRIX SPIKE QUALITY CONTROL DATA REPORT

ANALYTE	1,1-DCE	Benzene	TCE	Toluene	Chloro-benzene
Sample Result:	N.D.	N.D.	N.D.	N.D.	N.D.
Spike Conc. Added:	10.0	10.0	10.0	10.0	10.0
Spike Result:	5.6	8.9	8.9	9.7	9.7
Spike % Recovery:	56%	89%	89%	97%	97%
Spike Dup. Result:	5.8	9.4	9.4	10.3	10.3
Spike Duplicate % Recovery:	58%	94%	94%	103%	103%
Upper Control Limit %:	120	124	112	120	128
Lower Control Limit %:	56	69	80	75	62
Relative % Difference:	3.5%	5.5%	5.5%	6.0%	6.0%
Maximum RPD:	10	13	11	11	12

NORTH CREEK ANALYTICAL Inc.

Shannon Stowell
Project Manager

% Recovery: $\frac{\text{Spike Result - Sample Result}}{\text{Spike Conc. Added}} \times 100$

Relative % Difference: $\frac{\text{Spike Result - Spike Dup. Result}}{\text{(Spike Result + Spike Dup. Result) / 2}} \times 100$

RZA AGRA, Inc.
Engineering & Environmental Services
11335 N.E. 122nd Way, Suite 100
Kirkland, Washington 98034
(206) 820-4669 FAX (206) 821-3914

11843

Chain of Custody Record / Analysis Request

Project Name: Y-Pay-Mor Job No.: 11-7883-11
Project Manager: Dale Kramer Phone #: 820-4669
Sampler: Todd Wentworth

Analysis Requested: (circle, check box or write preferred method in box)

RZA AGRA, Inc. Sample ID	Lab Samp ID	Date Collected	Time Collected	Matrix (S=soil, W=water, A=air)	# Containers/Preservation: 40 ml VOA / 3	1 L Glass /	8 oz Glass /			HCl	CHILL	BTEX by EPA 8020 Soil / EPA 602 Water	WTPH-G	BTEX / WTPH-G	WTPH-HCID	WTPH-D	TPH by EPA 8015 Mod.	WTPH-418.1 Modified	TPH by EPA 418.1	LEAD EPA 6010 7420 7421 Soil / Total / Dissolved EPA 7421 Water	TOTAL METALS	TCLP EPA 1311	PCBs EPA 8080 Soil / EPA 608 Water	VOCs EPA 8010 8020 Soil / EPA 601 602 Water	GC/MS EPA 8240 Volatiles	GC/MS EPA 8270 Semi-volatiles			Hold for Further Analysis	RUSH (see below)
W-2	460602	13 Jun	1:30	W	X					X	X															X				
W-3	603	13 Jun	2:30	W	X					X	X															X				

RELINQUISHED BY SAMPLER:	RELINQUISHED BY:	RELINQUISHED BY:
Signature: Todd Wentworth	Signature: Kim Hazard	Signature:
Printed Name: Todd Wentworth	Printed Name: Kim Hazard	Printed Name:
Firm: RZA-AGRA	Firm: RZA AGRA	Firm:
Date/Time: 14 Jun 94 / 8:45	Date/Time: 6-14-94 930	Date/Time:
RECEIVED BY:	**RECEIVED BY:**	**RECEIVED BY:**
Signature: Kim Hazard	Signature: J. Collier	Signature:
Printed Name: Kim Hazard	Printed Name: J. Collier	Printed Name:
Firm: RZA AGRA	Firm: NCA	Firm:
Date/Time: 6-14-94 845	Date/Time: 6/14/94 1700	Date/Time:

LABORATORY: NCA
Total # Containers: 6
Condition of Containers?
Condition of Seals?

Special Handling
Turnaround:
- ☐ 8 hour
- ☐ 24 hour
- ☐ 5 business day
- ☐ 10 business day
- ☐ other _____ (#)business day

PURPOSE OF SAMPLING / COMMENTS:

Form 100A DISTRIBUTION: WHITE - return to originator; YELLOW - lab; PINK - retained by originator; GOLDENROD - to lab in advance

Project: Why Pay More
Project No.: 11-07883-11
Project Manager: Dale Kramer
Sample Matrix: Water

Service Request No.: WA940620
Report Date: 11/23/94
Report No.: 94062001
C.O.C. No.: 00345

Volatile Organic Halocarbons
EPA Method 8010
µg/L(ppb)

Sample Name:	MW2	MW3	Lab Blank	**Method Reporting Limit**
Lab Code:	0620-1	0620-2	0620-MB	
Chloromethane	ND	ND	ND	1.0
Vinyl Chloride	ND	ND	ND	1.0
Bromomethane	ND	ND	ND	5.0
Chloroethane	ND	ND	ND	5.0
Trichlorofluoromethane	ND	ND	ND	1.0
1,1-Dichloroethene	ND	ND	ND	1.0
Methylene Chloride	ND	ND	ND	1.0
T-1,2-Dichloroethene	ND	ND	ND	1.0
1,1-Dichloroethane	ND	ND	ND	1.0
C-1,2-Dichloroethene	ND	2.2	ND	1.0
Chloroform	ND	ND	ND	1.0
1,1,1-Trichloroethane (TCA)	ND	ND	ND	1.0
Carbon Tetrachloride	ND	ND	ND	1.0
1,2-Dichloroethane (EDC)	ND	ND	ND	1.0
Trichloroethene (TCE)	ND	ND	ND	1.0
1,2-Dichloropropane	ND	ND	ND	1.0
Bromodichloromethane	ND	ND	ND	1.0
2-Chloroethylvinyl ether	ND	ND	ND	1.0
T-1,3-Dichloropropene	ND	ND	ND	1.0
C-1,3-Dichloropropene	ND	ND	ND	1.0
1,1,2-Trichloroethane	ND	ND	ND	1.0
Tetrachloroethene (PCE)	ND	ND	ND	1.0
Dibromochloromethane	ND	ND	ND	1.0
1,2-Dibromoethane (EDB)	ND	ND	ND	1.0
Chlorobenzene	ND	ND	ND	1.0
Bromoform	ND	ND	ND	1.0
1,1,2,2-Tetrachloroethane	ND	ND	ND	1.0
1,3-Dichlorobenzene	ND	ND	ND	1.0
1,4-Dichlorobenzene	ND	ND	ND	1.0
1,2-Dichlorobenzene	ND	ND	ND	1.0
Sample Date:	11/17/94	11/17/94	11/22/94	
Analysis Date:	11/23/94	11/23/94	11/23/94	

ND Not Detected

AGRA
Earth & Environmental

ANALYSIS
EPA Method 8010

Surrogate Recoveries:

Sample Name:	MW2	MW3	Lab Blank	
Lab Code:	0620-1	0620-2	0620-MB	**Control**
Date Analyzed:	11/23/94	11/23/94	11/23/94	**Limits**
Bromochloromethane:	61.0%	64.5%	65.9%	60%-124%
1,4 - Dichlorobutane:	89.9%	89.2%	86.9%	59%-125%

Signature of Chemist

Laboratory Manager

AGRA
Earth & Environmental

AGRA
Earth & Environmental
11335 NE 122nd Way, Suite 100
Kirkland, Washington 98034-6918
Tel (206) 820-4669 Fax (206) 821-3914

CHAIN OF CUSTODY

PROJECT Y Paul Moor	PROJECT No. 11-07883-11
CLIENT	PHONE No.
PROJECT MANAGER Dale Kramer	PHONE No. 820-4669
SAMPLER'S NAME (please print) Ryan Mead / Eric Smith	PHONE No.
SAMPLER'S SIGNATURE [signature]	

ANALYSIS REQUESTED (circle, check box or write preferred method in box)

SAMPLE I.D.	DATE	TIME	MATRIX	PRESERVATIVE	CONTAINERS No.	CONTAINERS VOL.	BTEX by EPA 602 / 8020	WTPH-G	BTEX / WTPH-G	WTPH-HCID	WTPH-D / WTPH-D EXTENDED	TPH by EPA 8015 MODIFIED	WTPH-418.1 MODIFIED	TPH by EPA 418.1	GC / MS EPA 624 / 8240 or EPA 8260 Volatiles	GC / MS EPA 625 / 8270 Semi-volatiles	VOCs EPA 601 / 8010 or EPA 602 / 8020	PCBs EPA 608 / 8080	LEAD EPA 6010 / EPA 7421 Total / Dissolved	TOTAL METALS	TCLP				
1. MW2	11/17/94	2:45	W	HCl	3	40A											X								
2. MW3	11/17/94	2:47	W	HCl	3	40A											X								
3.																									
4.																									
5.																									
6.																									
7.																									
8.																									
9.																									
10.																									

SAMPLE RECEIPT	LABORATORY Portland	TURNAROUND TIME	SPECIAL INSTRUCTIONS / ADDITIONAL COMMENTS
TOTAL # CONTAINERS 6	SHIPPING I.D. / AIRBILL #	☐ 8 HOUR	NOTE MW3 has historically shown concentrations of ≈ 5ppb PCE and/or cis 1,2 Dichloroethene
CONDITION OF CONTAINERS	CARRIER	☐ 24 HOUR	
CONDITION OF SEALS	DOT DESIGNATION	☐ 1 WEEK	
		☐ 2 WEEK (standard)	
		☐ OTHER _____	

RELINQUISHED BY / AFFILIATION	DATE	TIME	ACCEPTED BY / AFFILIATION	DATE	TIME
1. [signature] AGRA	11/17/94		1. [signature] / AGRA	11/17	
2. [signature] / AGRA	11/21/94	1330	2. Cynthia Nelson / AGRA	11/22/94	1030a
3.			3.		

PAGE 1 OF 1

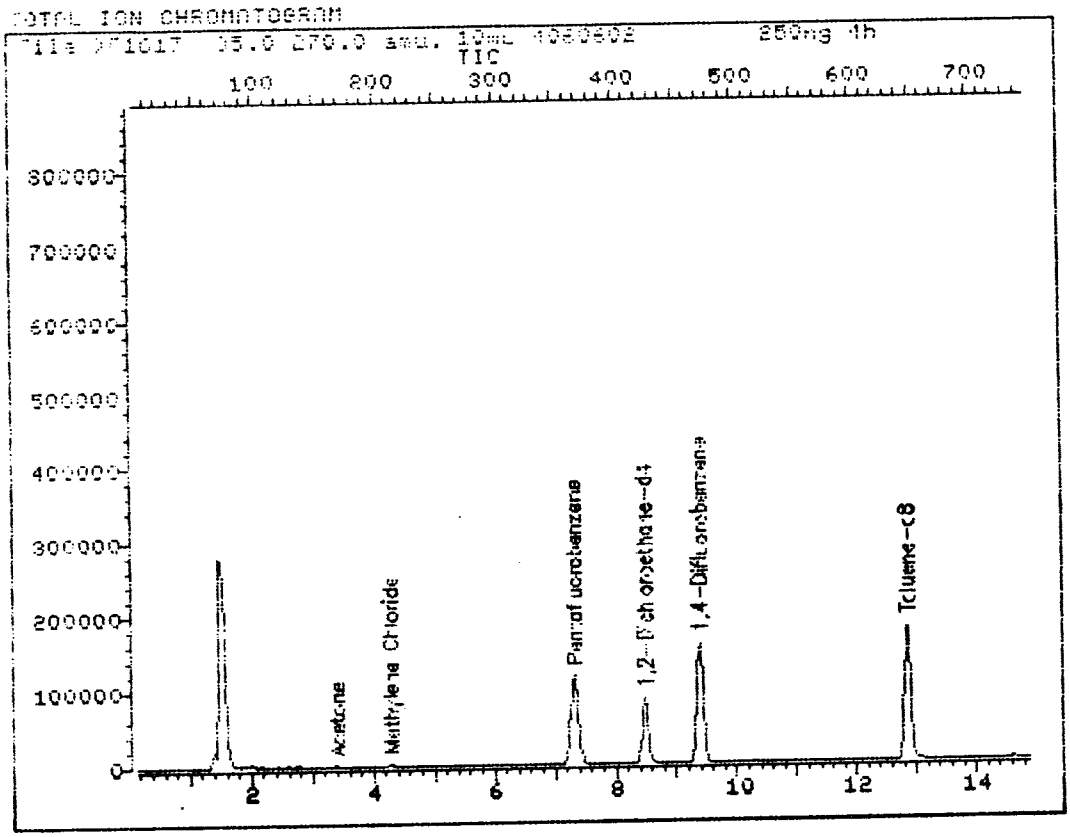

Data File: >F1617::D5
Name: 10mL 4060602
Misc: 250ng 4h

Quant Output File: ^F1617::A6
Instrument ID: MS-1

Id File: ID 624::D2
Title: Volatile Organic Compounds
Last Calibration: 940614 15:16

Last Qcal Time: <none>

Operator ID: GLEN
Quant Time : 940616 20:01
Injected at: 940616 19:30

TOTAL ION CHROMATOGRAM

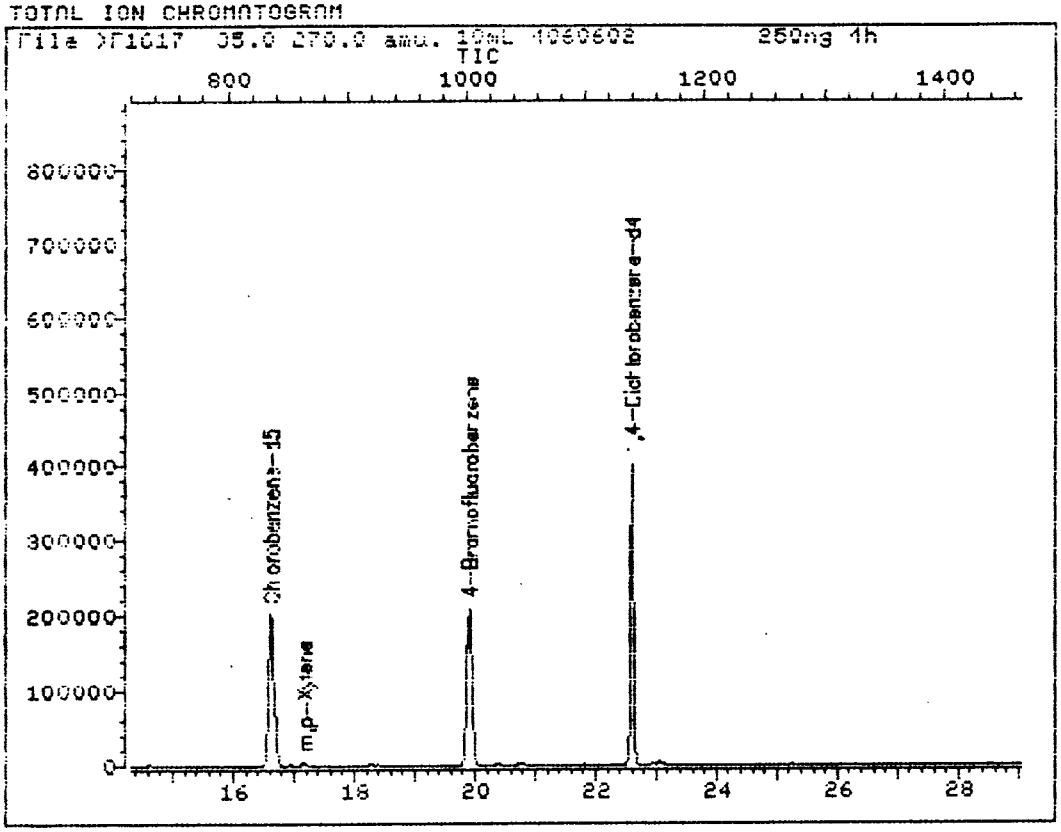

Data File: >F1617::D5 Quant Output File: ^F1617::A6
Name: 10mL 4060602 Instrument ID: MS-1
Misc: 250ng 4h

Id File: ID 624::D2
Title: Volatile Organic Compounds
Last Calibration: 940614 15:16 Last Qcal Time: <none>

Operator ID: GLEN
Quant Time : 940616 20:01
Injected at: 940616 19:30

TOTAL ION CHROMATOGRAM

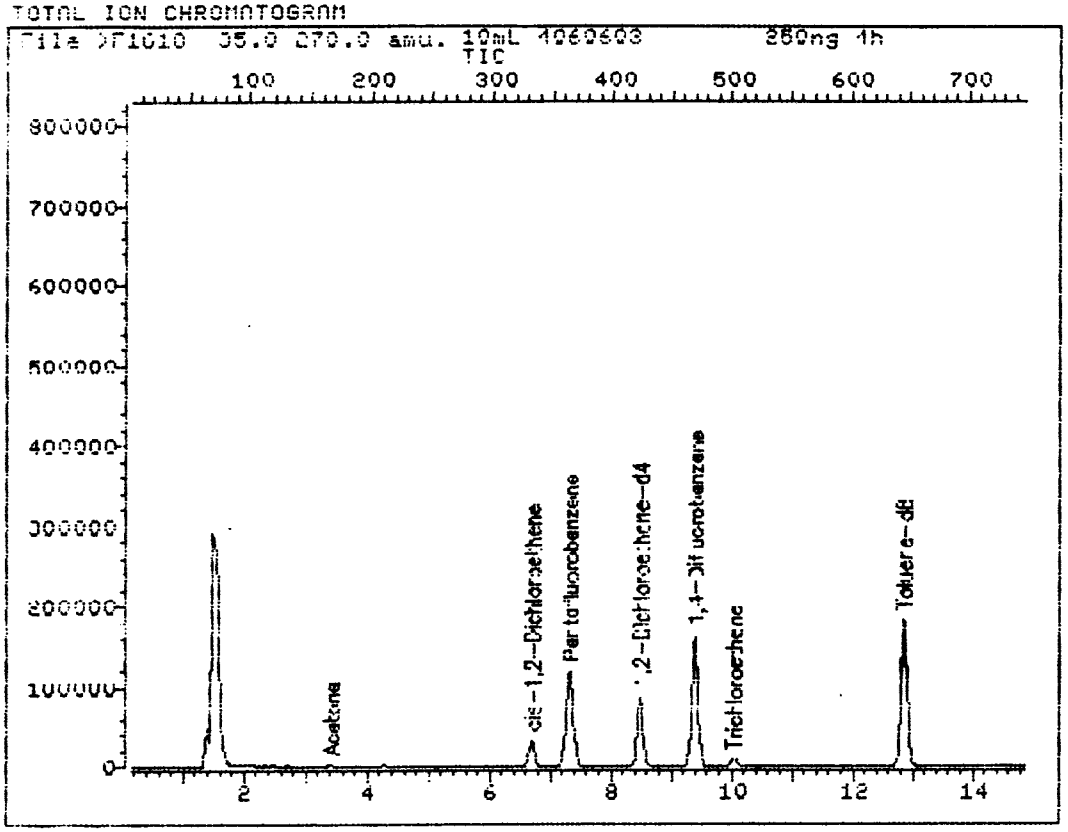

Data File: >F1618::D5 **Quant Output File: ^F1618::A6**

Name: 10mL 4060603 Instrument ID: MS-1

Misc: 250ng 4h

Id File: ID 624::D2

Title: Volatile Organic Compounds

Last Calibration: 940614 15:16 Last Qcal Time: <none>

Operator ID: GLEN

Quant Time : 940616 20:36

Injected at: 940616 20:06

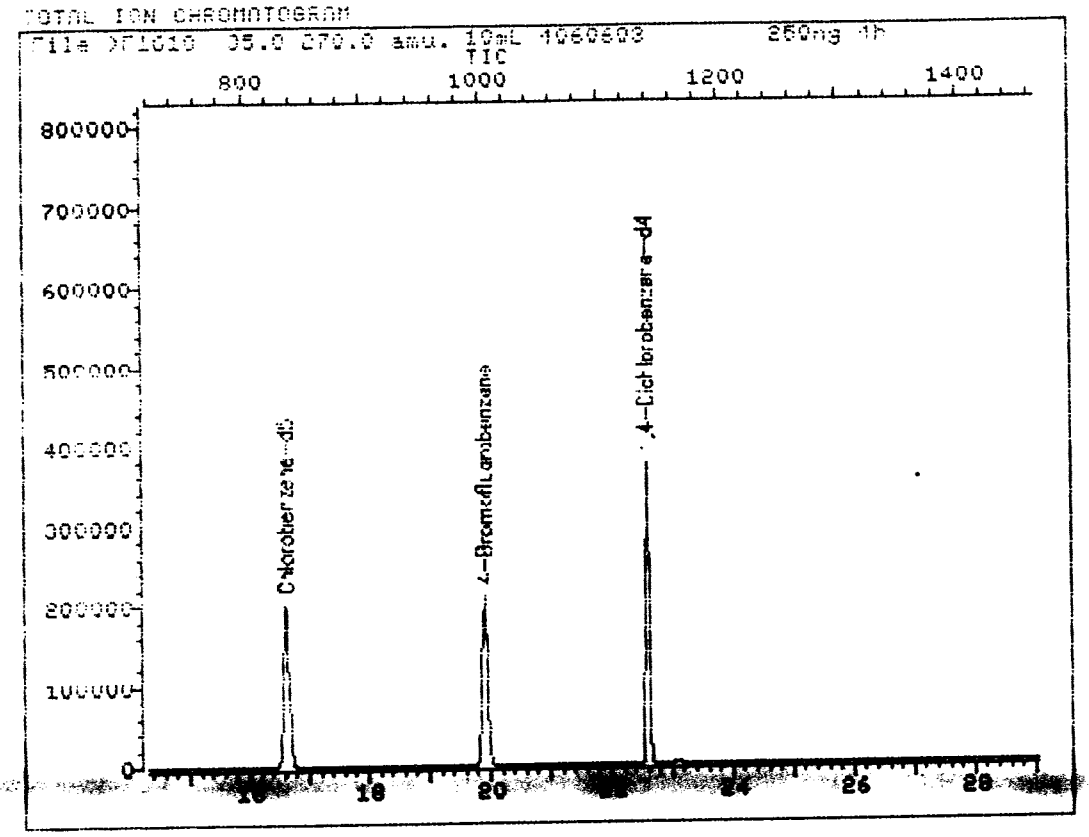

Data File: >F1618::D5
Name: 10mL 4060603
Misc: 250ng 4h

Quant Output File: ^F1618::A6
Instrument ID: MS-1

Id File: ID 624::D2
Title: Volatile Organic Compounds
Last Calibration: 940614 15:16

Last Qcal Time: <none>

Operator ID: GLEN
Quant Time : 940616 20:36
Injected at: 940616 20:06

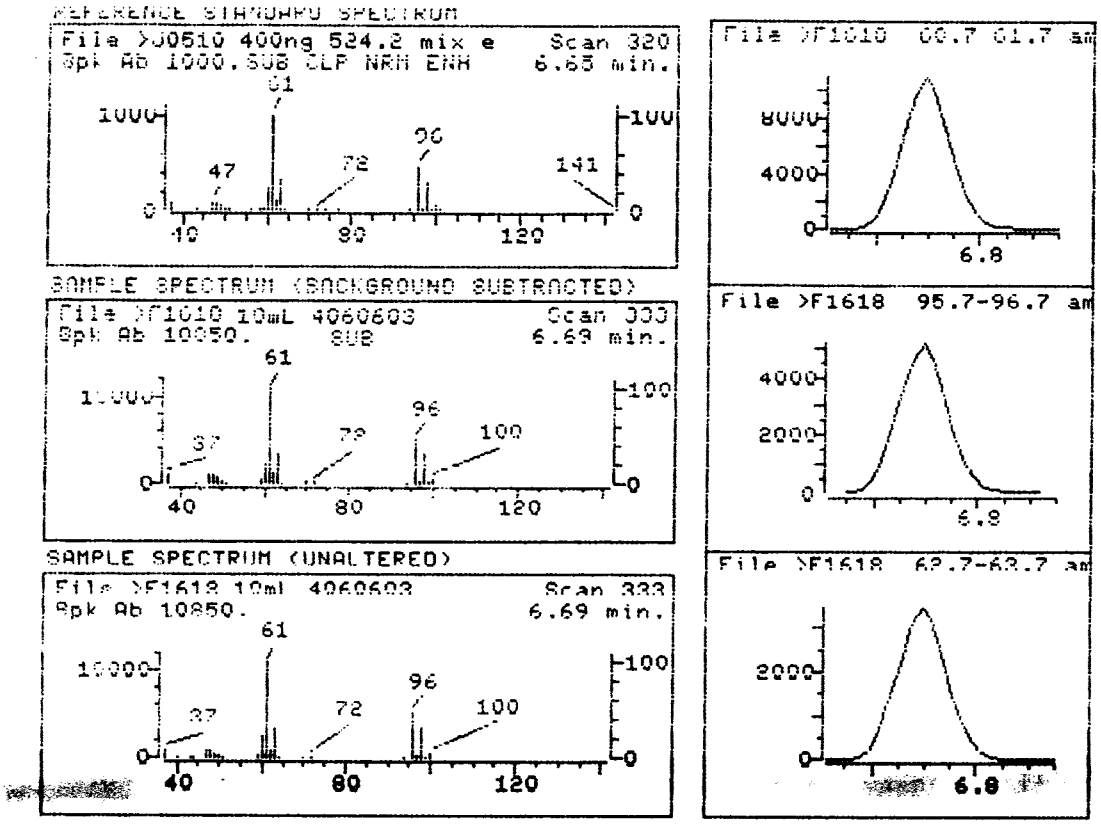

Data File: >F1618::D5
Name: 10mL 4060603
Misc: 250ng 4h
Quant Time: 940616 20:36
Injected at: 940616 20:06
Last Qcal Time: <none>

Quant Output File: ^F1618::A6
Instrument ID: MS-1

Quant ID File: ID 624::D2
Last Calibration: 940614 15:16

Compound No : 21
Compound Name : cis-1,2-Dichloroethene
Scan Number : 333
Retention Time: 6.69 min.
Quant Ion : 96.0
Area : 34981
Concentration : 53.70 ng
q-value : 98

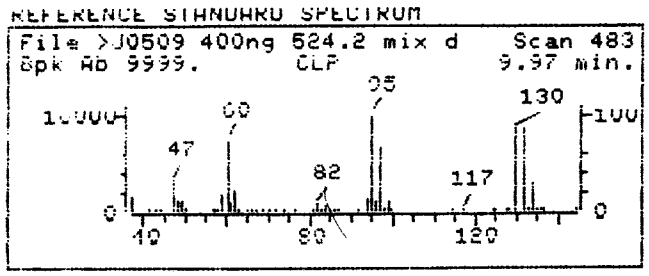

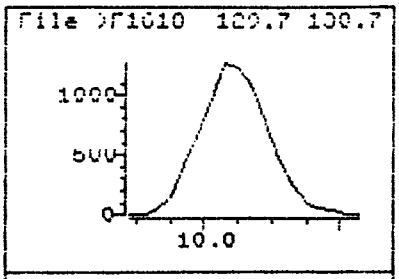

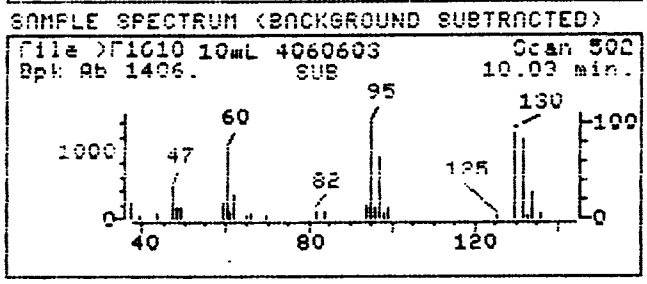

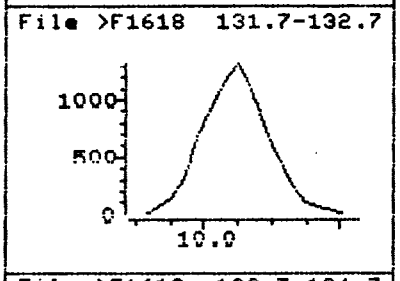

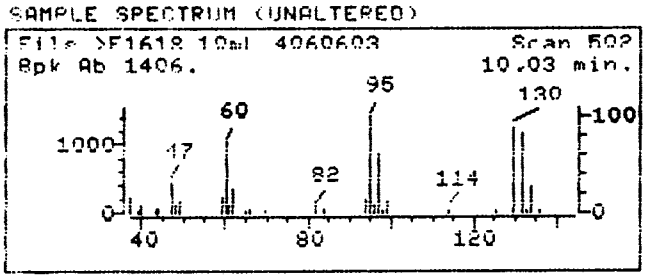

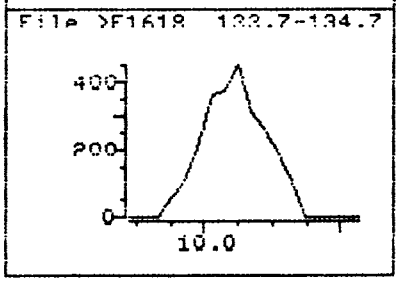

Data File: >F1618::D5
Name: 10mL 4060603
Misc: 250ng 4h
Quant Time: 940616 20:36
Injected at: 940616 20:06
Last Qcal Time: <none>

Quant Output File: ^F1618::A6
Instrument ID: MS-1

Quant ID File: ID 624::D2
Last Calibration: 940614 15:16

Compound No : 31
Compound Name : Trichloroethene
Scan Number : 502
Retention Time: 10.03 min.
Quant Ion : 130.0
Area : 8920
Concentration : 14.29 ng
q-value : 94

Appendix F - ECOLOGY DOCUMENTATION:

APPENDIX A

WASHINGTON DEPARTMENT OF ECOLOGY SPILL RESPONSE DOCUMENTATION

DEPARTMENT OF ECOLOGY
ERT SYSTEM - INITIAL REPORT/FOLLOWUP

COORDINATOR: BELINDA HOVDE UNIQUE RECORD #: N5617 REGION: N

DATE/TIME REC'D: 03/08/91 12:01:00 REPORT TYPE: INITIAL

REPORTER'S NAME: LT. BRAD SMITH BUSINESS NAME: FEDERAL WAY F/D

ADDRESS: FEDERAL WAY WA BEST TIME TO CALL:

OR ANONYMOUS:

WORK PHONE: (206)-972-9649 EXT. HOME PHONE:

DETAILS ON INCIDENT:

COUNTY: KING NEAREST CITY: FEDERAL WAY

WATERWAY: WRIA #:

LOCATION: 2210 S 320. FEDERAL WAY

WEATHER: TIDE:

DETAILS ON ALLEGED VIOLATOR:

CONTACT'S NAME:

NAME & ADDRESS:

Y 'PAYMORE' CLEANERS

2210 S 320

FEDERAL WAY WA 98003

PHONE NUMBER AND EXT:

VEHICLE INFORMATION:

DESCRIPTION OF CONTAMINANT: (PROVIDED BY REPORTER)

MEDIUM: BLDG/STRUC

MATERIAL: CHEMICALS OTHER: DRY CLEAN CHEMICALS

QUANTITY: 6 GALLONS

SOURCE: COMMERCIAL

COMMENTS: DRY CLEANERS SPILLED 6 GALLONS OF DRY CLEANING SOLUTION. TETRACHLOROETHYLENE. TRIED TO ABSORB W/ BLANKETS. ONLY INSIDE BLDG. MACHINE OVERHEATED. PEOPLE HAVING REACTION TO CHEMICALS. HAZMET AT LEVEL B. MATERIAL IN DRUMS. CHEMPRO FINISHING. EVERYTHING OK.

PREFERRED TO PROGRAM: SPILLS SECTION HEAD: O'BRIEN

INTERNAL REFERRALT (Y/N): N

IF INTERNAL, WHAT AGENCY:

INVESTIGATION COMPLETED? (Y/N): Y

IF YES, COMPLETE SECOND PAGE OF FORM.

CONTINUED ON PAGE 2

INTERNAL REFERRAL INFORMATION:

NAME OF STAFF PERSON: HOOVER
DATE RECEIVED: 08/06/91
DATE INVESTIGATED: 08/06/91
DATE COMPLETED: 08/06/91
ACTION TAKEN: TELEPHONE
CAUSE OF INCIDENT: EQUIP FAILURE
IMPACT: BOTH
LUST: N

NONPOINT: (UNK, GW, SW) POINT: (UNK, SW, PRETMT)

ACTUAL VIOLATOR INFORMATION:

NAME: Y 'PAYMORE' CLEANERS
CONTACT:
ADDRESS: 2210 S 320
CITY: FEDERAL WAY WA 98003
HOME:
WORK:

ACTUAL CONTAMINANT:

MEDIUM: BLDG/STRUC
MATERIAL: CHEMICALS
OTHER: DRY CLEAN CHEMICALS
QUANTITY: 6 GALLONS
SOURCE: COMMERCIAL

ENFORCEMENT SENSITIVE? (Y/N): N

CROSS-REFERENCES TO OTHER SYSTEMS:

OTHER RELEVANT INFORMATION:

SPOKE TO LT. SMITH. SITUATION HANDLED.

WRITE ANY ADDITIONAL INFORMATION ON BACK OF FORM:

DEPARTMENT OF ECOLOGY
ERT SYSTEM - INITIAL REPORT/FOLLOWUP

COORDINATOR: DAVID HOVI UNIQUE RECORD #: N6406 REGION: N

DATE/TIME REC'D: 10/04/91 16:46:37 REPORT TYPE: INITIAL

REPORTER'S NAME: LT BRAD SMITH BUSINESS NAME: KING CO FD #39

ADDRESS: FEDERAL WAY WA BEST TIME TO CALL:

OR ANONYMOUS:

WORK PHONE: (206)-948-2510 EXT. CELL HOME PHONE: (206)-948-2511

DETAILS ON INCIDENT:

COUNTY: KING NEAREST CITY: FEDERAL WAY

WATERWAY: WRIA #:

LOCATION:

WEATHER: UNKNOWN TIDE:

DETAILS ON ALLEGED VIOLATOR:

NAME & ADDRESS:
Y PAYMOR CLEANERS
2210 S 320 ST
FEDERAL WAY WA 98003

CONTACT'S NAME:
SOO KANG CHANG
PHONE NUMBER AND EXT:
(206)-946-2269

VEHICLE INFORMATION:

DESCRIPTION OF CONTAMINANT: (PROVIDED BY REPORTER)

MEDIUM: BLDG/STRUC
MATERIAL: HAZ MATERIAL OTHER: PERCLORETHYLENE
QUANTITY: UNK
SOURCE: COMMERCIAL

COMMENTS: WASTE SPILL. 99.9% PERC SPILLED. ABOUT A 10X15 FT AREA INSIDE STORE MACHINE STOPPED. AIR DOWN IN THAT AREA TO CONTAIN. THIS IS WASTE PRODUCT. NOT SAME AS SPILL ABOUT A MONTH AGO. BUT RELATED. ARGUING FOR WHAT TO DO.

REFERRED TO PROGRAM: SPILLS SECTION HEAD: O'BRIEN

EXTERNAL REFERRALS (Y/N): N

IF EXTERNAL, WHAT AGENCY:

INVESTIGATION COMPLETED? Y/N: Y
IF YES, COMPLETE SECOND PAGE OF FORM.

CONTINUED ON PAGE 2

INTERNAL REFERRAL INFORMATION:

NAME OF STAFF PERSON: HOOVER/RAUH DATE RECEIVED: 10/04/91
DATE INVESTIGATED: 10/04/91
ACTION TAKEN: FIELD RESPONSE DATE COMPLETED: 10/04/91
CAUSE OF INCIDENT: ACCIDENT
IMPACT: BOTH LUST: N

NONPOINT: (UNK. GW. SW) POINT: (UNK. SW. PRETMT)

ACTUAL VIOLATOR INFORMATION:

NAME: Y PAYMOR CLEANERS CONTACT:
ADDRESS: 2210 E 320 ST SOO KANG CHANG
CITY: FEDERAL WAY WA 98003
HOME:
WORK: (206)-946-2269

ACTUAL CONTAMINANT:

MEDIUM: BLDG/STRUC
MATERIAL: HAZ MATERIAL OTHER: PERCLORETHYLENE
QUANTITY: UNK
SOURCE: COMMERCIAL

ENFORCEMENT SENSITIVE? (Y/N): N

CROSS-REFERENCES TO OTHER SYSTEMS:

OTHER RELEVANT INFORMATION:

LT BRAD SMITH REQ DOE HELP. AS STORE OWNER IS RELUCTANT TO CLEAN UP MESS INSIDE THE STORE. THERE IS POTENTIAL FOR SEEPAGE INTO ADJOINING FACILITY. CHECKED W/ BRIDGET. ON SCENE 10:20. SPOKE W/ BRAD AND MR. CHANG (THROUGH INTERPRETER) MR. CHANG DECIDED TO CALL CHEMPRO TO CLEAN UP. F/D HAS CLOSED STORE UNTIL L+I, HEALTH AND CITY INSPECTS PREMEISES AS THIS IS THE 2ND EVENT IN 1 MONTH.

WRITE ANY ADDITIONAL INFORMATION ON BACK OF FORM:

STATE OF WASHINGTON
DEPARTMENT OF ECOLOGY
Northwest Regional Office, 3190 - 160th Ave S.E. • Bellevue, Washington 98008-5452 • (206) 649-7000

October 21, 1992

Mr. Wayne Reisenauer
Northwest Building Corporation
1300 Norton Building
801 Second Avenue
Seattle, Washington 98104

Re: Washington State Department of Ecology Meeting
With RZA AGRA, Inc.
Former Y-PAY-MOR Dry Cleaners Remedial Investigation

Dear Mr. Reisenauer:

Pursuant to our meeting of 13 October, 1992, the Washington State Department of Ecology (Ecology) would like to document the pertinent issues discussed concerning trichloroethylene (TCE) and tetrachloroethylene (PCE) contaminated soils and the ongoing Remedial Investigation at the former Y-PAY-MOR dry cleaner in Federal Way, Washington.

Ecology understands that the site has operated as a dry cleaner for approximately four years. Ecology and Federal Way Fire Department responded to two PCE spills on 8 August and 4 October 1991. Volumes of the 8 August spill were estimated by Ecology to be six gallons of PCE dry cleaning solution. The 4 October spill encompassed an area of approximately 10 feet by 15 feet, involving a solution of approximately 99.9% PCE. TCE and PCE are solvent compounds that are typically used in dry cleaning operations.

CHARACTERIZATION/REMEDIAL INVESTIGATION

Characterization and Remedial Investigation conducted by RZA AGRA, Inc. (RZA AGRA) has identified PCE and TCE contaminated soils to a depth of at least 7.5 feet beneath the west central area of the former dry cleaners. RZA AGRA reports that PCE and TCE contamination exists mainly as vapors trapped within the soil air space (vadose zone) and to a minor extent, as liquid in the form of globules. The fill soils were analyzed for PCE and TCE and were found to exceed clean up standards set forth in the Model Toxic Control Act (MTCA) WAC 173-340. The occurrence of ground water and ground water contamination at the site has not been investigated to date.

Pursuant to our meeting, Ecology understands that a final exploration below the fill/native soil contact (approximately 7.5 feet) will be conducted by RZA AGRA to assess soils and ground water integrity to approximately 20 feet.

REMEDIAL ALTERNATIVE

Ecology understands that RZA AGRA has investigated the feasibility of extracting PCE and TCE vapors by applying a vacuum to the vadose zone using six stainless steel vapor extraction well points.

Vapor extraction (soil venting) is a remedial alternative by which a vacuum is applied to the contaminated soils using a high volume blower attached to perforated well points installed within the contaminated soils. PCE and TCE removal is amenable to vapor extraction due to the relative low boiling points which enable the contaminants to readily evaporate and become available for removal as a vapor. This method of remediation has been widely used for contaminants of this nature and has proven to be most successful. Ecology concurs with the recommendations offered by RZA AGRA that vapor extraction be utilized as a primary clean-up option.

The Department of Ecology appreciates your efforts and compliance with clean up regulations set forth in MTCA WAC 173-340. If you have any questions, please feel free to call.

Sincerely,

Brian S. Sato, P.E.
Project Manager
Toxics Cleanup Program
(206) 649-7265

cc: Bill Toy, John Bickley - Northwest Building Corp.
Michael Moore, Dale Kramer - RZA AGRA
Ann Lawler, Steve Loltz, Esq. - Schwabe, Williamson, Ferguson & Burdell

Appendix G

APPENDIX G
SOIL AND PURGE WATER DISPOSAL

RZA AGRA, Inc.
Engineering & Environmental Services

11335 NE 122nd Way
Suite 100
Kirkland, WA 98034-6918
(206) 820-4669
FAX (206) 821-3914

App

31 August 1993 11-07883-09

Northwest Building Corporation
801 Second Avenue
1300 Norton Building
Seattle, WA 98104

Attention: Mr. John Bickley

Subject: Disposal of Soils and Purge Water from
the Former Y-PAY-MOR Dry Cleaners
2210 - 320th Street South
Federal Way, Washington

Dear Mr. Bickley:

RZA AGRA, Inc. (RZA AGRA) is pleased to present this letter report summarizing the disposal of soils, groundwater, drilling spoils and dry cleaning solvent from the former Y-PAY-MOR Dry Cleaners. The scope of services for this phase of the project was authorized by Mr. Wayne Reisenauer on 16 July 1993.

Proper disposal profiling required RZA AGRA to obtain representative composite samples of stockpiled soils, drummed soils and drummed purge water which remained from the former dry cleaner's site characterization and remediation activities. Samples were collected on 22 June 1993 and delivered to Northwest EnviroService, Inc. on 23 June 1993 for waste profiling.

Laboratory analysis of the waste materials indicated that, with the exception of the approximately 2 gallons of tetrachloroethylene (PCE) in the bucket, materials were not characteristic of dangerous waste according to Washington Administrative Code 173-303-090. Copies of waste product questionnaires which show the profile summary of each material are enclosed.

In accordance with the 16 July 1993 request, representatives from RZA AGRA and Custom Backhoe & Dump Truck Service transferred the waste materials from the subject building to a location outside of the former

Y-PAY-MOR Dry Cleaners. Also at this time, the stockpiled soils were placed into 55-gallon drums and placed at this outside location. Miscellaneous construction debris, such as carpeting, clean sand and clean concrete, was loaded into a truck and disposed of at a local landfill. A six-foot, chain-link fence was placed around the drums and secured with a lock. The inside of the building was swept and all material associated with site characterization activities was removed. These activities were performed on 22 July 1993.

On 18 August 1993 RZA AGRA observed Northwest EnviroService, Inc. remove the drummed materials from the subject property for disposal. The PCE in the 2-gallon bucket was placed in a 30-gallon labpack (overpack) pursuant to WAC 173-303-161. A total of 31 drums, including 30 55-gallon drums and 1 30-gallon drum were removed from the site and transported to Northwest EnviroService's facility in Seattle, Washington. Copies of the manifests signed by the transporter are enclosed. The originals were sent to you via certified mail on 3 September 1993.

Record Keeping/Reporting Requirements

The Washington Dangerous Waste Regulations (WAC 173-303-210 and -220) require Northwest Building Corporation to:

(1) keep each manifest signed by the initial transporter until it receives a signed copy from the facility which received the waste. You should receive a copy of this signed manifest from the receiving facility within 35 days of the date the waste was accepted by the transporter (by September 21, 1993). If you don't receive it by then, you must contact the transporter to determine the status. If you have not received a signed copy from the receiving facility within 45 days, you must file an exception report with the Department of Ecology;

(2) file an annual report summarizing its waste disposal activities for the previous year no later than March 1;

(3) retain each annual report for a period of at least five years from the due date of each report; and

(4) retain all records of any test results, waste profile designating the waste dangerous or non-dangerous for at least five years from the date the waste was last transferred off-site for disposal.

Some generators choose to retain disposal and waste profile records forever in the event any questions arise at a later date. However, by law, you are only required to retain the records for five years.

Completion of Notification of Dangerous Waste Activities Form

On 2 July 1993 Mr. Dave Misko of the Department stated to Mr. Dale Kramer of RZA AGRA that, although the subject property had an EPA Identification number, a new identification number would be required. Therefore, anticipating concentrations of chemical constituents which would trigger the Dangerous Waste Regulations, we completed the Notification of Dangerous Waste Activities form. The form was submitted to the Department of Ecology on 9 July 1993 for processing. In late August, Mr. John Bickley of Northwest Building Corporation was notified by Ms. Robin Munroe of the Department of Ecology that the identification number for the subject property would remain the same as that used by the former Y-Pay-Mor Dry Cleaners. She also stated that she would revise the notification form to show Northwest Building Corporation as the installation, rather than the former Y-Pay-Mor Dry Cleaners. The revised notification form is attached. This identification number will be required in order to dispose of the carbon currently used on site as part of the soils remediation system.

RZA AGRA, Inc. appreciates the opportunity to assist you in this matter. Please do not hesitate to contact us at (206) 820-4669 if you have any questions or comments regarding this matter.

Sincerely,
RZA AGRA, Inc.

Cheri E. Borland
Regulatory Compliance Specialist

Michael C. Moore
Associate

Enclosures: Waste Profile Questionnaires
Manifests
Notification of Dangerous Waste Activities Form

Northwest EnviroService, Inc.
O Box 24443 Seattle, Washington 98124 (206) 622-1090

WASTE PRODUCT QUESTIONNAIRE

PLEASE DO NOT SEPARATE FORMS
Generator's copy will be mailed back after NWES review

WPQ 58339

Generator U.S. EPA ID: X-EMIT
Sample Number: 930324-1F

Generator Name and Facility Address:
WB099 Northwest Buidling Corp.
Y-Pay-More Drycleaners
2210 320th Street South
Federal Way, WA

Billing Address:
RZA100 RZA AGRA
11335 N.E. 122nd Way
Suite 100
Kirkland, WA 98034

Technical Contact | Title | Phone
Business Contact | Title | Phone

WASTE PRODUCT DESCRIPTION & CHARACTERISTICS

Waste Product Name: Soil (non-hazardous)

Process Generating Waste: Dry cleaner remediation

Physical State At 70°F.: [X] Solid [ ] Sludge [ ] Liquid [ ] Powder [ ] Compressed Gas

Free Liquids at 70°F.: [ ] Yes [X] No — Volume ____ %

Flash Point: [ ] BP < 95°F [ ] < 70°F. [ ] 70°-99°F. [ ] 100°-139°F. [ ] 140°-200°F. [ ] > 200°F. [X] No Flash — [ ] Closed Cup [ ] Open Cup Exact ____

Layers: [ ] Multilayered [ ] Bi-Layered [X] Homogenous

pH: [ ] ≤ 2 [ ] > 2-4 [X] 4.1-10 [ ] 10.1-12.4 [ ] ≥ 12.5 [X] Exact 7.5

Solids: [X] By Volume — Total 100 % — Dissolved ____ % — Suspended ____ %

Specific Gravity: 1.40
Density: [ ] Liquid ____ lbs. gal. [ ] Solid ____ lbs. ft.³

Odor: [ ] None [ ] Strong [ ] Mild — Describe ____

Color: Brown opaque

METALS

[X] Toxicity Characteristic Leaching Procedure (TCLP)

Arsenic (As)	<0.1	Mercury (Hg)	<0.2
Barium (Ba)	0.9	Nickel (Ni)	<0.1
Cadmium (Cd)	<0.1	Selenium (Se)	0.1
Chromium (Cr)	<0.1	Silver (Ag)	<0.1
Copper (Cu)	<0.1	Zinc (Zn)	1.2
Lead (Pb)	0.1	Nondetectable	

REACTIVES AND OTHER WASTES (PPM)

Cyanides	NT	PCB's	NT
Sulfides	NEG	HexChrome	NEG
	NEG	HOC	<100

WASTE PRODUCT CHEMICAL COMPOSITION (Account For 100% of Total)

		Other (Specify):	
H_2O	%	Soil	100
HCl	%	F-list scan	ND
H_2SO_4	%		
HNO_3	%		
NaOH	%		
Phenols	%		
Chlorides	%		

SHIPPING & HANDLING INFORMATION

Proper Shipping Name: Soil (non-hazardous).

DOT Hazard Class: ____ I.D. #: ____

RQ ____ ERG ____

Poison [ ] Yes [X] No Inhalation Hazard [ ] Yes [X] No Dangerous When Wet [ ] Yes [X] No

DOT Shipping Container: Drum [X] Volume ____ Bulk [ ] Volume ____

Other [ ] Type ____ Volume ____

Projected: ____ Gals lbs per [ ] mo [ ] yr

Optional Labels Required:

HAZARDOUS PROPERTIES

U.S. EPA Hazardous Codes ____

Washington State Codes ____

State Designation DW [ ] EHW [ ] [ ] Biological [ ] Characteristic

Is Waste Product: [ ] Ignitable [ ] Corrosive [ ] Reactive [X] None of Above [ ] Other

[X] EXEMPT, [ ] TSCA, [ ] CERCLA, [ ] HOUSEHOLD

[ ] Subject to Land Disposal Restrictions (If marked, fill out notification sheet)

Special Handling Requirements: APE Rail

GENERATOR CERTIFICATION STATEMENT

I hereby certify, as an authorized representative of the Generator named above, that NWES has been fully informed of all information known about this waste, including but not limited to, the waste's generation process, composition, and physical characteristics, necessary to identify proper treatment and disposal of waste. I further certify that all information in this and the attached documents is true and accurate.

Signature ____ Title Project Scientist Date ____

NWES INC USE ONLY

Technical Review ____ Chemical Nature ____ Date Reviewed 8/10/93 Regulatory Review ____

Status [X] Approved/Permitted [ ] Denied [ ] Pe

Northwest EnviroService, Inc.
O Box 24443. Seattle. Washington 98124 (206) 622-1090

WASTE PRODUCT QUESTIONNAIRE

PLEASE DO NOT SEPARATE FORMS
Generator's copy will be mailed back after NWES review

WPQ 58341

Generator U.S. EPA ID: EXEMPT
Sample Number: 930624-1D

Generator Name and Facility Address:
WB099 Northwest Building Corp.
-Pay-More Drycleaners
210 320th Street South
Federal Way, WA 98003
SIC CODE:

Billing Address:
RZA100 RZA AGRA
11335 N.E. 122nd Way
Suite 100
Kirkland, WA 98034

Technical Contact | Title | Phone
Business Contact | Title | Phone

WASTE PRODUCT DESCRIPTION & CHARACTERISTICS

Waste Product Name: Caustic purged ground water, F-list scan, non-detected. [1C,1E,1F,1G,1A,B6]

Process Generating Waste: Purge ground water

Physical State At 70°F.
- [ ] Solid
- [ ] Sludge
- [X] Liquid
- [ ] Powder
- [ ] Compressed Gas

Free Liquids at 70°F.
- [X] Yes
- [ ] No

Volume 100 %

- [ ] BP < 95°F
- [ ] < 70°F.
- [ ] 70°-99°F.
- [ ] 100°-139°F.

Flash Point
- [ ] 140°-200°F.
- [ ] > 200°F.
- [ ] No Flash
- [ ] Closed Cup
- [ ] Open Cup

Exact

Layers
- [ ] Multilayered
- [ ] Bi-Layered
- [ ] Homogenous

pH
- [ ] ≤ 2
- [ ] > 2-4
- [ ] 4.1-10
- [X] 10.1-12.4
- [ ] ≥ 12.5
- [X] Exact 11.4

Solids
- [ ] By Volume
- Total ____ %
- Dissolved ____ %
- Suspended ____ %

Specific Gravity 1.10

Density:
- [ ] Liquid lbs./gal.
- [ ] Solid lbs./ft.³

Odor
- [ ] None
- [ ] Strong
- [ ] Mild
- Describe

Color

METALS

[X] Toxicity Characteristic Leaching Procedure (TCLP)

Arsenic (As)	<0.03	Mercury (Hg)	<0.2
Barium (Ba)	<0.1	Nickel (Ni)	<0.1
Cadmium (Cd)	<0.1	Selenium (Se)	<0.1
Chromium (Cr)	<0.1	Silver (Ag)	<0.1
Copper (Cu)	<0.1	Zinc (Zn)	<0.1
Lead (Pb)	<0.1	Nondetectable	

REACTIVES AND OTHER WASTES (PPM)

Cyanides	NEG	HexChrome	NEG
Sulfides	NEG	HOC	NT

WASTE PRODUCT CHEMICAL COMPOSITION (Account For 100% of Total)

		Other (Specify):	
H_2O	%	Caustic purge	
HCl	%	ground water	100
H_2SO_4	%		
HNO_3	%		
NaOH	%		
Phenols	%		
Benzene	%		

SHIPPING & HANDLING INFORMATION

Proper Shipping Name: Waste caustic alkali liquids, n.o.s. (inorganic alkali).

DOT Hazard Class: 8 I.D. #: UN1719

RQ ____ ERG ____

Poison [ ] Yes [X] No Inhalation Hazard [ ] Yes [X] No Dangerous When Wet [ ] Yes [X] No
Marine Pollutant [ ] Yes [X] No

DOT Shipping Container: Drum [ ] Volume ____ Bulk [ ] Volume ____
Other [ ] Type ____ Volume ____
Projected: ____ Gals/lbs per [ ] mo [ ] yr.

Additional Labels Required:

HAZARDOUS PROPERTIES

U.S. EPA Hazardous Codes

Washington State Codes

State Designation DW [ ] EHW [ ] [ ] Biological [ ] Characte

Is Waste Product [ ] Ignitable [ ] Corrosive [ ] Reactive [X] None of Above

[X] EXEMPT, [ ] TSCA, [ ] CERCLA, [ ] HOUSEHOLD, [ ] DEBRIS,
[ ] OSHA/WISHA CARCINOGEN [X] WASTE WATER [ ] NON WASTE
[ ] Subject to Land Disposal Restrictions (if marked fill out notification)
[ ] Subject to NESHAPS (benzene) Subpart FF (if yes, cannot accept)

Special Handling Requirements: WTP-A1

GENERATOR CERTIFICATION STATEMENT

I hereby certify, as an authorized representative of the Generator named above, that NWES has been fully informed of all information known about this waste, including but not limited to, the waste's generation process, composition, and physical characteristics, necessary to identify proper treatment and disposal of waste. I further certify that all information in this and the attached documents is true and accurate.

Signature [illegible] Title [illegible] Date [illegible]

NWES INC. USE ONLY

Chemical Review [illegible] Chemical Nature [ ] O [X] O/I Date Reviewed 8/7/93 Regulatory Review [illegible]

Status [X] Approved/Permitted [ ] Denied [ ]

[illegible]

Northwest EnviroService, Inc.

P.O. Box 24443, Seattle, Washington 98124 (206) 622-1090

WASTE PRODUCT QUESTIONNAIRE

PLEASE DO NOT SEPARATE FORMS
Generator's copy will be mailed back after NWES review

WPQ 59246

Generator U.S. EPA ID: [illegible] | Sample Number: MSDS

Generator Name and Facility Address:
NWB099 Northwest Building Corp.
Y-Pay-More Drycleaners
3210 320th Street South
Federal Way, WA 98003
SIC CODE 3841

Billing Address:
RZA100 RZA AGRA
11335 N.E. 122nd Way
Suite 100
Kirkland, WA 98034

Technical Contact: [illegible] | Title | Phone

Business Contact | Title | Phone

WASTE PRODUCT DESCRIPTION & CHARACTERISTICS

Waste Product Name: Bentonite (non-hazardous)

Process Generating Waste: Discarded material

Physical State At 70°F.
- [x] Solid
- [ ] Sludge
- [ ] Liquid
- [ ] Powder
- [ ] Compressed Gas

Free Liquids at 70°F.
- [ ] Yes
- [x] No

Volume _____ %

Flash Point
- [ ] BP < 95°F
- [ ] < 70°F.
- [ ] 70°-99°F.
- [ ] 100°-139°F.
- [ ] 140°-200°F.
- [ ] > 200°F.
- [ ] No Flash
- [ ] Closed Cup
- [ ] Open Cup

Exact _____

Layers
- [ ] Multilayered
- [ ] Bi-Layered
- [ ] Homogenous

pH
- [ ] ≤ 2
- [ ] > 2-4
- [ ] 4.1-10
- [ ] 10.1-12.4
- [ ] ≥ 12.5
- [ ] Exact _____

Solids
- [x] By Volume

Total 100 %
Dissolved _____ %
Suspended _____ %

Specific Gravity _____

Density:
- [ ] Liquid lbs./gal.
- [ ] Solid lbs./ft.³

Odor
- [ ] None
- [ ] Strong
- [ ] Mild

Describe _____

Color _____

METALS

[x] Toxicity Characteristic Leaching Procedure (TCLP)

Arsenic (As)	NT	Mercury (Hg)	NT
Barium (Ba)	NT	Nickel (Ni)	NT
Cadmium (Cd)	NT	Selenium (Se)	NT
Chromium (Cr)	NT	Silver (Ag)	NT
Copper (Cu)	NT	Zinc (Zn)	NT
Lead (Pb)	NT	Nondetectable	

REACTIVES AND OTHER WASTES (PPM)

Amines	NT	PCB's	NT
Cyanides	NT	HexChrome	NT
Sulfides	NT	HOC	NT

WASTE PRODUCT CHEMICAL COMPOSITION (Account For 100% of Total)

		Other (Specify):	
H_2O	%	Bentonite	100
HCl	%		
H_2SO_4	%		
HNO_3	%		
NaOH	%		
Phenols	%		
Benzene	%		

SHIPPING & HANDLING INFORMATION

Proper Shipping Name: Waste Bentonite (non-hazardous).

DOT Hazard Class: _____ I.D. #: _____

PG _____ RQ _____ ERG _____

Poison [ ] Yes [x] No Inhalation Hazard [ ] Yes [x] No Dangerous When Wet [ ] Yes [x] No
Marine Pollutant [ ] Yes [x] No

DOT Shipping Container: Drum [ ] Volume _____ Bulk [ ] Volume _____
Other [ ] Type _____ Volume _____
Projected: _____ Gals/lbs per [ ] mo [ ] yr.

Additional Labels Required:

HAZARDOUS PROPERTIES

U.S. EPA Hazardous Codes _____

Washington State Codes _____

State Designation DW [ ] EHW [ ] [ ] Biologic Charact

Is Waste Product: [ ] Ignitable [ ] Corrosive [ ] Reactive [x] None of Above

[x] EXEMPT, [ ] TSCA, [ ] CERCLA, [ ] HOUSEHOLD, [ ] DEBRIS,
[ ] OSHA/WISHA CARCINOGEN [ ] WASTE WATER [x] NON WASTE
[ ] Subject to Land Disposal Restrictions (if marked fill out notification)
[ ] Subject to NESHAPS (benzene) Subpart FF (if yes, cannot accept)

Special Handling Requirements: NRS

GENERATOR CERTIFICATION STATEMENT

I hereby certify, as an authorized representative of the Generator named above, that NWES has been fully informed of all information known about this waste, including but not limited to, the waste's generation process, composition, and physical characteristics necessary to identify proper treatment and disposal of waste. I further certify that all information in this and the attached documents is true and accurate.

Signature [illegible] Title Project Scientist Date 8-17-9[illegible]

NWES INC. USE ONLY

Technical Review [illegible] | Chemical Nature [ ] O [x] [ ] O/I | Date Reviewed 9/7/93 | Regulatory Review [illegible] | Status [x] Approved/Permitted [ ] Denied

Sol. T 38C

Northwest EnviroService, Inc.
O. Box 24443, Seattle, Washington 98124 (206) 622-1090

WASTE PRODUCT QUESTIONNAIRE

PLEASE DO NOT SEPARATE FORMS
Generator's copy will be mailed back after NWES review

WPQ 58331

Generator U.S. EPA ID: [illegible] | Sample Number: 930624-1C

Generator Name and Facility Address
WB099 Northwest Building Corp.
Y-Pay-More Drycleaners
2210 320th Street South
Federal Way, WA

Billing Address
RZA100 RZA AGRA
11335 N.E. 122nd Way
Suite 100
Kirkland, WA 98034

Technical Contact | Title | Phone
Business Contact | Title | Phone

WASTE PRODUCT DESCRIPTION & CHARACTERISTICS

Waste Product Name: Decon water (non-hazardous), F-list scan, non-detected (B6-MW3)

Process Generating Waste: Purged Groundwater

Physical State At 70°F.: ☐ Solid ☐ Sludge ☐ Liquid ☐ Powder ☐ Compressed Gas

Free Liquids at 70°F.: ☒ Yes ☐ No — Volume 100 %

Flash Point: ☐ BP < 95°F ☐ < 70°F. ☐ 70°-99°F. ☐ 100°-139°F. ☐ 140°-200°F. ☐ > 200°F. ☒ No Flash — ☐ Closed Cup ☐ Open Cup — Exact ____

Layers: ☐ Multilayered ☐ Bi-Layered ☒ Homogenous

pH: ☐ ≤ 2 ☐ > 2-4 ☐ 4.1-10 ☐ 10.1-12.4 ☐ ≥ 12.5 ☒ Exact 9.1

Solids: ☒ By Volume — Total trace %; Dissolved ____ %; Suspended ____ %

Specific Gravity: ____

Density: ☐ Liquid lbs. gal. ☐ Solid lbs./ft.³

Odor: ☐ None ☐ Strong ☐ Mild — Describe ____

Color: Brown, transp

METALS

☒ Toxicity Characteristic Leaching Procedure (TCLP)

Arsenic (As)	0.3	Mercury (Hg)	<0.2
Barium (Ba)	0.1	Nickel (Ni)	0.3
Cadmium (Cd)	<0.1	Selenium (Se)	0.3
Chromium (Cr)	0.2	Silver (Ag)	<0.1
Copper (Cu)	0.2	Zinc (Zn)	0.3
Lead (Pb)	0.5	Nondetectable	

REACTIVES AND OTHER WASTES (PPM)

Cyanides	NEG	HexChrome	NEG
Sulfides	NEG	HOC	NT

WASTE PRODUCT CHEMICAL COMPOSITION (Account For 100% of Total)

		Other (Specify):	
H_2O	%	Decon water	100
HCl	%	F-list scan	ND
H_2SO_4	%		
HNO_3	%		
NaOH	%		
Phenols	%		
Chlorides	%		

SHIPPING & HANDLING INFORMATION

Proper Shipping Name: Decon water (non-hazardous).

DOT Hazard Class: ____ I.D. #: ____

RQ ____ ERG ____

Poison ☐ Yes ☒ No Inhalation Hazard ☐ Yes ☒ No Dangerous When Wet ☐ Yes ☒ No

DOT Shipping Container: Drum ☒ Volume ____ Bulk ☐ Volume ____

Other ☐ Type ____ Volume ____

Ejected: ____ Gals lbs per ☐ mo ☐ yr.

Additional Labels Required:

HAZARDOUS PROPERTIES

U.S. EPA Hazardous Codes ____

Washington State Codes ____

State Designation DW ☐ EHW ☐ ☐ Biological ☐ Characteristic

Is Waste Product: ☐ Ignitable ☐ Corrosive ☐ Reactive ☒ None of Above ☐

☒ EXEMPT, ☐ TSCA, ☐ CERCLA, ☐ HOUSEHOLD

☐ Subject to Land Disposal Restrictions (If marked, fill out notification sheet)

Special Handling Requirements: NTP-A1

GENERATOR CERTIFICATION STATEMENT

I hereby certify, as an authorized representative of the Generator named above, that NWES has been fully informed of all information known about this waste, including but not limited to, the waste's generation process, composition, and physical characteristics necessary to identify proper treatment and disposal of waste. I further certify that all information in this and the attached documents is true and accurate.

Signature [illegible] for RZA AGRA, Inc. Title Project Scientist Date 8-2-93

NWES INC. USE ONLY

Chemical Review [illegible] Chemical Nature ☐ O ☐ I ☐ O/I Date Reviewed 8/3/93 Regulatory Review [illegible] Status ☒ Approved/Permitted ☐ Denied

Northwest EnviroService, Inc.
O Box 24443. Seattle. Washington 98124 (206) 622-1090

WASTE PRODUCT QUESTIONNAIRE

PLEASE DO NOT SEPARATE FORMS
Generator's copy will be mailed back after NWES review

WPQ 56335

Generator U.S. EPA ID: [illegible] Sample Number: 930624-1G

Generator Name and Facility Address
WB099 Northwest Building Corp.
Y-Pay-More Drycleaners
2210 320th Street South
Feceral Way, WA

Billing Address
RZA100 RZA AGRA
11335 N.E. 122nd Way
Suite 100
Kirkland, WA 98034

Technical Contact | Title | Phone
Business Contact | Title | Phone

WASTE PRODUCT DESCRIPTION & CHARACTERISTICS

Waste Product Name: Mineral spirits w/tetrachloroethene [Bucket] 7 mgs

Process Generating Waste: [illegible] Cleaners

Physical State At 70°F.: ☐ Solid ☐ Sludge ☒ Liquid ☐ Powder ☐ Compressed Gas

Free Liquids at 70°F.: ☒ Yes ☐ No — Volume 70-80 %

Flash Point: ☐ BP < 95°F ☐ < 70°F. ☐ 70°-99°F. ☐ 100°-139°F. ☐ 140°-200°F. ☐ > 200°F. ☒ No Flash ☐ Closed Cup ☐ Open Cup — Exact ____

Layers: ☐ Multilayered ☐ Bi-Layered ☐ Homogenous

pH: ☐ ≤ 2 ☐ > 2-4 ☐ 4.1-10 ☐ 10.1-12.4 ☐ ≥ 12.5 ☐ Exact ____

Solids: ☐ By Volume — Total 20-60 % — Dissolved ____ % — Suspended ____ %

Specific Gravity: ____

Density: ☐ Liquid lbs. gal. ☐ Solid lbs. ft.³

Odor: ☐ None ☐ Strong ☐ Mild — Describe ____

Color: ____

METALS

☐ Toxicity Characteristic Leaching Procedure (TCLP)

Arsenic (As)	NT	Mercury (Hg)	NT
Barium (Ba)	NT	Nickel (Ni)	NT
Cadmium (Cd)	NT	Selenium (Se)	NT
Chromium (Cr)	NT	Silver (Ag)	NT
Copper (Cu)	NT	Zinc (Zn)	NT
Lead (Pb)	NT	Nondetectable	

REACTIVES AND OTHER WASTES (PPM)

Cyanides	NT	PCB's	NT
Sulfides	NT	HexChrome	NT
		HOC	714,000

WASTE PRODUCT CHEMICAL COMPOSITION (Account For 100% of Total)

	%	Other (Specify):	
H_2O		Mineral spirits	4 [illegible] - [illegible]
HCl		Tetrachlorethene	[illegible] - 7[illegible]
H_2SO_4		[illegible]	[illegible]
HNO_3			
NaOH			
Phenols			
Chlorides			

SHIPPING & HANDLING INFORMATION

Proper Shipping Name: Waste tetrachloroethene.

DOT Hazard Class: [illegible] I.D. # UN [illegible]

[illegible] RQ ____ ERG ____

Poison ☐ Yes ☒ No Inhalation Hazard ☐ Yes ☒ No Dangerous When Wet ☐ Yes ☒ No

DOT Shipping Container: Drum ☒ Volume 55. Bulk ☐ Volume ____

Other ☐ Type ____ Volume ____

Projected ____ Gals lbs per ☐ mo ☐ yr.

Additional Labels Required: [illegible]

HAZARDOUS PROPERTIES

U.S. EPA Hazardous Codes D039 F002

Washington State Codes WP01 [illegible]

State Designation DW ☐ EHW ☒ ☐ Biological Characte

Is Waste Product: ☐ Ignitable ☐ Corrosive ☐ Reactive ☐ None of Above ☒

☐ EXEMPT, ☐ TSCA, ☐ CERCLA, ☐ HOUSEHOLD

☒ Subject to Land Disposal Restrictions (If marked, fill out notification sheet)

Special Handling Requirements: [illegible] Generator [illegible]

F-[illegible] (Press)/EOD

GENERATOR CERTIFICATION STATEMENT

I hereby certify, as an authorized representative of the Generator named above, that NWES has been fully informed of all information known about this waste including but not limited to, the waste's generation process, composition, and physical characteristics necessary to identify proper treatment and disposal of waste. I further certify that all information in this and the attached documents is true and accurate.

Signature [illegible] Title Project Coord. Date 8-7-93

NWES INC. USE ONLY

Chemical Review: [illegible] Chemical Nature: ☐ O ☐ [illegible] Date Reviewed: 8/7/93 Regulatory Review: ____ Status: ☒ Approved/Permitted ☐ Denied ☐ [illegible]

Northwest EnviroService, Inc.

O Box 24443 Seattle, Washington 98124 (206) 622-1090

WASTE PRODUCT QUESTIONNAIRE

PLEASE DO NOT SEPARATE FORMS
Generator's copy will be mailed back after NWES review

WPQ 58337

Generator U.S. EPA ID: [illegible]

Sample Number: 930624-1E

Generator Name and Facility Address:
WB099 Northwest Buidling Corp.
Y-Pay-More Drycleaners
2210 320th Street South
Federal Way, WA

Billing Address:
RZA100 RZA AGRA
11335 N.E. 122nd Way
Suite 100
Kirkland, WA 98034

Technical Contact: | Title: | Phone:

Business Contact: | Title: | Phone:

WASTE PRODUCT DESCRIPTION & CHARACTERISTICS

Waste Product Name: Stock pile soil (non-hazardous)

Process Generating Waste: Trenching Dry cleaners

Physical State At 70°F.: [X] Solid [ ] Sludge [ ] Liquid [ ] Powder [ ] Compressed Gas

Free Liquids at 70°F.: [ ] Yes [X] No Volume ____ %

Flash Point: [ ] BP < 95°F [ ] < 70°F. [ ] 70°-99°F. [ ] 100°-139°F. [ ] 140°-200°F. [ ] > 200°F. [ ] No Flash [ ] Closed Cup [ ] Open Cup Exact ____

Layers: [ ] Multilayered [ ] Bi-Layered [X] Homogenous

pH: [ ] ≤ 2 [ ] >2-4 [X] 4.1-10 [ ] 10.1-12.4 [ ] ≥ 12.5 [X] Exact 8.0

Solids: [X] By Volume Total 100 % Dissolved ____ % Suspended ____ %

Specific Gravity: 1.40

Density: [ ] Liquid lbs. gal. [ ] Solid lbs. ft.³

Odor: [ ] None [ ] Strong [ ] Mild Describe ____

Color: Brown - opaque

METALS

[X] Toxicity Characteristic Leaching Procedure (TCLP)

Arsenic (As)	<0.1	Mercury (Hg)	<0.2
Barium (Ba)	0.9	Nickel (Ni)	<0.1
Cadmium (Cd)	<0.1	Selenium (Se)	0.1
Chromium (Cr)	<0.1	Silver (Ag)	<0.1
Copper (Cu)	<0.1	Zinc (Zn)	1.2
Lead (Pb)	0.1	Nondetectable	

REACTIVES AND OTHER WASTES (PPM)

Cyanides	NT	PCB's	NT
Sulfides	NEG	HexChrome	NEG
	NEG	HOC	<100

WASTE PRODUCT CHEMICAL COMPOSITION (Account For 100% of Total)

	%	Other (Specify):	
H_2O		Soil	100
HCl		F-list solvent	ND
H_2SO_4			
HNO_3			
NaOH			
Phenols			
Chlorides			

SHIPPING & HANDLING INFORMATION

Proper Shipping Name: Stock pile soil (non-hazardous).

DOT Hazard Class ____ I.D. #: ____

RQ ____ ERG ____

Solid [ ] Yes [X] No Inhalation Hazard [ ] Yes [X] No Dangerous When Wet [ ] Yes [X] No

DOT Shipping Container: Drum [X] Volume 55 gal Bulk [ ] Volume ____

Other [X] Type ____ Volume ____

Projected ____ Gals/lbs per [ ] mo [ ] yr.

Optional Labels Required:

HAZARDOUS PROPERTIES

U.S. EPA Hazardous Codes ____

Washington State Codes ____

State Designation: DW [ ] EHW [ ] Biological Characte

Is Waste Product [ ] Ignitable [ ] Corrosive [ ] Reactive [X] None of Above [ ]

[X] EXEMPT, [ ] TSCA, [ ] CERCLA, [ ] HOUSEHOLD

[ ] Subject to Land Disposal Restrictions (If marked, fill out notification shee

Special Handling Requirements: API (NM)

GENERATOR CERTIFICATION STATEMENT

I hereby certify as an authorized representative of the Generator named above, that NWES has been fully informed of all information known about this waste, including but not limited to, the waste's generation process, composition, and physical characteristics, necessary to identify proper treatment and disposal of waste. I further certify that all information in this and the attached documents is true and accurate.

Signature [illegible] Title project Geologist Date 4-7-93

NWES INC. USE ONLY

Chemical Review: [illegible] Chemical Nature: [ ] O [ ] O/I Date Reviewed: 8/12/93 Regulatory Review: [illegible] Status: [X] Approved/Permitted [ ] Denied

WASHINGTON STATE
DEPARTMENT OF ECOLOGY

Send To:
Washington Department of Ecology
Hazardous Waste Information & Planning
Attn: DW Notifications
P.O. Box 47658
Olympia, WA 98504-7658
(206) 459-6387

DEPARTMENTAL USE ONLY

REC'D JUL 13 1993
LOG JUL 15 1993
REVIEW CS AUG 06 1993 N
Q/WAC
WA

FORM 2

NOTIFICATION OF DANGEROUS WASTE ACTIVITIES

1. ☒ A. FIRST NOTIFICATION (No previous application has been made for this site.) No CS
☐ B. REVISED NOTIFICATION DATE 07/09/93 (Complete all sections of the form. Enter existing site ID # in 1F.)
☐ C. WITHDRAW SITE ID # DATE ___ (Complete Sections 1F, 2-6 & 13. Enter existing site ID # in 1F.)
☐ D. REACTIVATE SITE ID # (Complete all sections of the form. Enter previously assigned site ID # in 1F.)
☐ E. CANCEL SITE ID # DATE ___ (Site closed—no longer own or conduct business at this site. Complete Sections 1F, 2-6 & 13. Enter existing site ID # in 1F.)
☑ F. EXISTING SITE ID # WA D981098304 (Complete for items 1B, C, D & E only.)

2.A. WASHINGTON STATE DEPARTMENT OF REVENUE REGISTRATION (TAX) NUMBER	2.B. SIC CODE(S) PRIMARY	SECONDARY	OTHER
578-078-929	1531	8711	

2.C. TYPE OF BUSINESS CONDUCTED AT THIS SITE Remediation of soils & groundwater of for

3. NAME OF INSTALLATION
NORTHWEST BUILDING CORP

4. LOCATION OF INSTALLATION (Attach site location map.)
Street: 2210 320th STREET SOUTH
County Name: KING
City or Town: FEDERAL WAY State: WA ZIP Code: 98003-

5. INSTALLATION MAILING ADDRESS
Street or P.O. Box: 801 SECOND AVENUE #1300
City or Town: SEATTLE State: WA ZIP Code: 98104-

6.A. INSTALLATION CONTACT
Name (last): BICKLEY (first): JOHN E
Job Title: DIR SHOP CNTR MGT Phone Number: 206-464-3255

6.B. INSTALLATION CONTACT MAILING ADDRESS
Street or P.O. Box: SEE SECTION 5
City or Town: State: ZIP Code: -

7.A. NAME OF INSTALLATION'S LEGAL OWNER
NORTHWEST BUILDING CORPORATION
Street or P.O. Box: 801 SECOND AVENUE #1300
City or Town: SEATTLE State: WA ZIP Code: 98104-

7.B. PROPERTY OWNERSHIP (Also provide address in section 12 if different from 7A.)
SEE SECTION 7A

7.C. OWNER TYPE	7.D. PROPERTY TYPE
P	P

ECL (Rev. 6/92) 1 page

ATTACH SITE LOCATION MAP

*** FOR 24 HOUR EMERGENCY RESPONSE INFORMATION, CALL (206) 622-1090 ***

JOB# 42673 9-30-

Please print or type (Form designed for use on elite (12-pitch) typewriter) Form Approved. OMB No. 2050-0039. Expires 9-30-XXX

UNIFORM HAZARDOUS WASTE MANIFEST

1. Generator's US EPA ID No: SQG
Manifest Document No: 10146
2. Page 1 of 1
Information in the shaded areas is not required by Federal law

3. Generator's Name and Mailing Address
Northwest Building Corp. Y-Pay-More Drycleaners
2210 320th Street South, Federal Way, WA 98003
4. Generator's Phone (206) 820-4669

A. State Manifest Document Number
B. State Generator's ID

5. Transporter 1 Company Name: Northwest EnviroService, Inc.
6. US EPA ID Number: WAD058367152
C. State Transporter's ID
D. Transporter's Phone (206)622-1090

7. Transporter 2 Company Name
8. US EPA ID Number
E. State Transporter's ID
F. Transporter's Phone

9. Designated Facility Name and Site Address
Northwest EnviroService, Inc.
1500 Airport Way South
Seattle, WA 98134
10. US EPA ID Number: WAD058367152
G. State Facility's ID
H. Facility's Phone (206) 622-1090

GENERATOR

	11. US DOT Description (Including Proper Shipping Name, Hazard Class and ID Number)	HM	12. Containers No.	Type	13. Total Quantity	14. Unit Wt/Vol	I. Waste No.
a.	Empty drums, non-hazardous.		~~11~~ 9	DM	180	P	
b.							
c.							
d.							

J. Additional Descriptions for Materials Listed Above
a)WPQ59375 - Empty drums last contained non-hazardous drill cuttings - EMT

K. Handling Codes for Wastes Listed Above
a)S01C T29T

15. Special Handling Instructions and Additional Information
Delivery due to arrive on 8/23/93. Load #6334.

16. **GENERATOR'S CERTIFICATION:** I hereby declare that the contents of this consignment are fully and accurately described above by proper shipping name and are classified, packed, marked, and labeled, and are in all respects in proper condition for transport by highway according to applicable international and national government regulations.

If I am a large quantity generator, I certify that I have a program in place to reduce the volume and toxicity of waste generated to the degree I have determined to be economically practicable and that I have selected the practicable method of treatment, storage, or disposal currently available to me which minimizes the present and future threat to human health and the environment; **OR**, if I am a small quantity generator, I have made a good faith effort to minimize my waste generation and select the best waste management method that is available to me and that I can afford.

Printed/Typed Name: Don Schnoor
Signature:
Month Day Year: 8 23 93

TRANSPORTER

17. Transporter 1 Acknowledgement of Receipt of Materials
Printed/Typed Name: Jim Watson
Signature:
Month Day Year: 08 23 93

18. Transporter 2 Acknowledgement of Receipt of Materials
Printed/Typed Name:
Signature:
Month Day Year:

FACILITY

19. Discrepancy Indication Space

20. Facility Owner or Operator: Certification of receipt of hazardous materials covered by this manifest except as noted in Item 19
Printed/Typed Name: William M. Gibson
Signature:
Month Day Year: 8 23 93

***** FOR 24 HOUR EMERGENCY RESPONSE INFORMATION, CALL (206) 622-1090 *****

JOB# 42587 9-30-9

Please print or type. (Form designed for use on elite (12-pitch) typewriter.) Form Approved. OMB No. 2050-0039. Expires 9-30-91

UNIFORM HAZARDOUS WASTE MANIFEST

1. Generator's US EPA ID No: SQG
Manifest Document No: 10097
2. Page 1 of 1
Information in the shaded areas is not required by Federal law

3. Generator's Name and Mailing Address
Northwest Building Corp. Y-Pay-More Drycleaners
2210 320th Street South, Federal Way, WA 98003
4. Generator's Phone (206) 820-4669

A. State Manifest Document Number
B. State Generator's ID

5. Transporter 1 Company Name: Northwest EnviroService, Inc.
6. US EPA ID Number: WAD058367152
C. State Transporter's ID
D. Transporter's Phone (206)622-1090

7. Transporter 2 Company Name
8. US EPA ID Number
E. State Transporter's ID
F. Transporter's Phone

9. Designated Facility Name and Site Address
Northwest EnviroService, Inc.
1500 Airport Way South
Seattle, WA 98134
10. US EPA ID Number: WAD058367152
G. State Facility's ID
H. Facility's Phone (206) 622-1090

GENERATOR

	11. US DOT Description (Including Proper Shipping Name, Hazard Class and ID Number)	HM	12. Containers No	12. Containers Type	13. Total Quantity	14. Unit Wt/Vol	I. Waste No.
a.	Waste tetrachloroethene. 6.1, UN1879. PGIII	X	1	DM	5	G	D039 F002 WP01 WC01 WT01
b.							
c.							
d.							

J. Additional Descriptions for Materials Listed Above
a)WPQ58335 - Mineral spirits w/tetrachloroethene [bucket] & Rags - F SER, PRS60D **Labels: Keep away from food

K. Handling Codes for Wastes Listed Above
a) S01C T38C S02T T44T

15. Special Handling Instructions and Additional Information
Due to arrive on 08/18/93. Load number 6341. This is a small quantity generator. DO NOT TAKE MORE THATN 220 LBS OF HAZARDOUS WASTE.

16. **GENERATOR'S CERTIFICATION**: I hereby declare that the contents of this consignment are fully and accurately described above by proper shipping name and are classified, packed, marked, and labeled, and are in all respects in proper condition for transport by highway according to applicable international and national government regulations.

If I am a large quantity generator, I certify that I have a program in place to reduce the volume and toxicity of waste generated to the degree I have determined to be economically practicable and that I have selected the practicable method of treatment, storage, or disposal currently available to me which minimizes the present and future threat to human health and the environment; **OR**, if I am a small quantity generator, I have made a good faith effort to minimize my waste generation and select the best waste management method that is available to me and that I can afford.

Printed/Typed Name: MARK T JOHNSTON - RZA-AGRA
Signature: Mark T Johnston RZA-AGRA
Month 8 Day 18 Year 93

TRANSPORTER

17. Transporter 1 Acknowledgement of Receipt of Materials
Printed/Typed Name: JERRY COLLINSON
Signature: Jerry Collinson
Month 8 Day 18 Year 93

18. Transporter 2 Acknowledgement of Receipt of Materials
Printed/Typed Name
Signature
Month Day Year

FACILITY

19. Discrepancy Indication Space

20. Facility Owner or Operator: Certification of receipt of hazardous materials covered by this manifest except as noted in Item 19
Printed/Typed Name: [illegible]
Signature: [illegible]
Month Day Year

*** FOR 24 HOUR EMERGENCY RESPONSE INFORMATION, CALL (206) 622-1090 ***

JOB# 42587 9-30-

Please print or type. (Form designed for use on elite (12-pitch) typewriter.)

Form Approved. OMB No. 2050-0039. Expires 9-30-XXX

UNIFORM HAZARDOUS WASTE MANIFEST

1. Generator's US EPA ID No: SQG
Manifest Document No: 10096
2. Page 1 of 2

Information in the shaded areas is not required by Federal law

3. Generator's Name and Mailing Address
Northwest Building Corp. Y-Pay-More Drycleaners
2210 320th Street South, Federal Way, WA 98003
4. Generator's Phone (206) 820-4669

A. State Manifest Document Number
B. State Generator's ID

5. Transporter 1 Company Name: Northwest EnviroService, Inc.
6. US EPA ID Number: WAD058367152
C. State Transporter's ID
D. Transporter's Phone (206)622-1090

7. Transporter 2 Company Name
8. US EPA ID Number
E. State Transporter's ID
F. Transporter's Phone

9. Designated Facility Name and Site Address
Northwest EnviroService, Inc.
1500 Airport Way South
Seattle, WA 98134
10. US EPA ID Number: WAD058367152
G. State Facility's ID
H. Facility's Phone (206) 622-1090

GENERATOR

	11. US DOT Description (Including Proper Shipping Name, Hazard Class and ID Number)	HM	12. Containers No.	Type	13. Total Quantity	14. Unit Wt/Vol	I. Waste No.
a.	Waste bentonite (non-hazardous).		1	DM	400	P	
b.	Soil (non-hazardous).		7 ~~8~~	DM	5250	P	
c.	Stock pile soil (non-hazardous).		14	DM	10500	P	
d.	Decon water (non-hazardous).		2	DM	25	G	

J. Additional Descriptions for Materials Listed Above
a)WPQ59246 - Betonite (non-hazardous) - API-NM
b)WPQ58339
c)WPQ58337 - - API-NM
d)WPQ58331 - Decon water (non-hazardous), F-list scan, non-detected

K. Handling Codes for Wastes Listed Above
b)a c) SOIC T2-IT
d) SOIC T4IT

15. Special Handling Instructions and Additional Information
[B6-MW3] - WTP-A1
Due to arrive on 08/18/93. Load number 6341. These are non-hazardous wastes. On manifest for tracking purposes only.

16. **GENERATOR'S CERTIFICATION**: I hereby declare that the contents of this consignment are fully and accurately described above by proper shipping name and are classified, packed, marked, and labeled, and are in all respects in proper condition for transport by highway according to applicable international and national government regulations.

If I am a large quantity generator, I certify that I have a program in place to reduce the volume and toxicity of waste generated to the degree I have determined to be economically practicable and that I have selected the practicable method of treatment, storage, or disposal currently available to me which minimizes the present and future threat to human health and the environment; OR, if I am a small quantity generator, I have made a good faith effort to minimize my waste generation and select the best waste management method that is available to me and that I can afford.

Printed/Typed Name: MARK T. JOHNSTON - RZA-AGRA
Signature: Mark T. Johnston RZA-AGRA
Month 8 Day 18 Year 93

TRANSPORTER

17. Transporter 1 Acknowledgement of Receipt of Materials
Printed/Typed Name: JERRY COLLINSON
Signature: [illegible]
Month 8 Day 18 Year 93

18. Transporter 2 Acknowledgement of Receipt of Materials
Printed/Typed Name
Signature
Month Day Year

FACILITY

19. Discrepancy Indication Space

20. Facility Owner or Operator: Certification of receipt of hazardous materials covered by this manifest except as noted in Item 19
Printed/Typed Name: JACK CALLAHAN
Signature: [illegible]
Month 8 Day 21 Year 93

*** FOR 24 HOUR EMERGENCY RESPONSE INFORMATION, CALL (206) 622-1090 ***

JOB# 42587 9-30-

Please print or type. (Form designed for use on elite (12-pitch) typewriter.) Form Approved. OMB No. 2050-0039. Expires 9-30-94

UNIFORM HAZARDOUS WASTE MANIFEST *(Continuation Sheet)*	21. Generator's US EPA ID No. SOG	Manifest Document No 10096	22. Page 2 of 2	Information in the shaded areas is not required by Federal law.

23. Generator's Name
Northwest Building Corp. Y-Pay-More Drycleaners
2210 320th Street South, Federal Way, WA 98003
(206) 820-4669

L. State Manifest Document Number

M. State Generator's ID

24. Transporter ___ Company Name

25. US EPA ID Number

N. State Transporter's ID

O. Transporter's Phone

26. Transporter ___ Company Name

27. US EPA ID Number

P. State Transporter's ID

Q. Transporter's Phone

	HM	28. US DOT Description *(Including Proper Shipping Name, Hazard Class, and ID Number)*	29. Containers No.	Type	30. Total Quantity	31. Unit Wt/Vol	R. Waste No.
a.	X	Waste caustic alkali liquids, n.o.s. (inorganic alkali). 8, UN1719. PGIII	8 ~~MGY~~	DM	336	G	
b.							
c.							
d.							
e.							
f.							
g.							
h.							
i.							

GENERATOR

S. Additional Descriptions for Materials Listed Above
aWP58341 - Caustic purged ground water, F-list scan, non-detected.
[1C,1E,1F,1G,A,B6] - WTP-A1

T. Handling Codes for Wastes Listed Above
a) S01C T41T

32. Special Handling Instructions and Additional Information

TRANSPORTER

33. Transporter ___ Acknowledgement of Receipt of Materials

Printed/Typed Name | Signature | Date Month Day Year

34. Transporter ___ Acknowledgement of Receipt of Materials

Printed/Typed Name | Signature | Date Month Day Year

FACILITY

35. Discrepancy Indication Space

RZA AGRA, Inc.
Engineering & Environmental Services

RECEIVED
FEB 16 1994
DEPT. OF ECOLOGY

11335 NE 122nd Way
Suite 100
Kirkland, WA 98034-6918
(206) 820-4669
FAX (206) 821-3914

7 February 1994

11-07883-10

Northwest Building Corporation
801 Second Avenue
1300 Norton Building
Seattle, Washington 98104

Attention: Mr. John Bickley

Subject: Soil Vapor Extraction Remediation System
Performance Monitoring Report
Former Y-Pay-Mor Dry Cleaners, Federal Way, WA

Dear Mr. Bickley:

RZA AGRA, Inc. (RZA AGRA) is pleased to submit our performance monitoring and system adjustment report for the time period 23 September 1993 through 5 January 1994. This work was conducted per our proposed scope of services and associated costs dated 17 September 1993 and approved by Northwest Building Corporation on 23 September 1993. System adjustment involved manifold alteration of soil-gas extraction lines and sampling of soil-gas (pre-carbon scrubbing) for tetrachloroethylene (PCE). Monitoring involved screening of soil-gas effluent after carbon filtering, with a photoionization detector.

Table 1 attached, summarizes our sampling and monitoring results for this phase of monitoring as well as previous phases, since system start-up on 17 June 1993. The emissions from the soil-gas extraction system were monitored with an photoionization detector (PID) at sample ports before and after carbon scrubbing. The PID was equipped with a 10.2 electron-volt lamp and calibrated with 100 parts per million (ppm) isobutylene standard gas. This procedure generates a relative response value for system performance.

Soil-gas samples submitted for PCE analysis by EPA Method 601 are plotted on Figure 1. The soil-gas extraction remediation system was turned off on 28 September 1993 in order to assess relative PCE "rebound" concentration and relative time required for rebound of soil-gas PCE. Upon turning on the system (18 October 1993), PCE concentrations recovered were reported by the analytical testing lab to be 100 µL PCE/L. Hence, from the data presented in Figure 1, a maximum of 20 days was required for subsurface PCE concentrations to rebound from the concentration of approximately 4 µL PCE/L to 100 µL PCE/L.

Figure 1 illustrates that rebound PCE soil-gas concentrations were 130 ppmV, 100 ppmV, and 83 ppmV on 17 June 1993, 18 October 1993, and 11 November 1993, respectively. Hence it appears that rebound PCE soil-gas is decreasing with time. If rebound soil-gas PCE continues to decrease with observed functionality, (Figure 1, ideal performance) the projected time to low PCE soil-gas concentrations (i.e. <10 ppmV) of rebound PCE is approximately 300 days (mid-April 1994) of system operation. However, if non-ideal performance of recovery occurs, then asymptotic leveling-off of rebound concentrations could occur. To date, the approximate average mass of PCE removed for 200 days of system operation is approximately 4.0 lbs. PCE.

Pulsing the recovery system on a 5 to 10 day cycle could increase efficiency of recovery of PCE on a mass per system operation cost basis. However, the cost-to-benefit ratio of retrofitting the system for pulsing could be high in the event that rebound PCE soil-gas concentrations are instantaneous or near instantaneous.

We appreciate the opportunity to offer our remediation services to Northwest Building Corporation. If you have any questions or concerns concerning this proposal, please do not hesitate to call at your earliest convenience.

Respectfully submitted,
RZA AGRA, Inc.

Dale A. Kramer

Dale A. Kramer, M.S.C., R.P.G.
Project Scientist/Geologist

(for)

Steven M. Marczewski, P.E.
Associate Environmental Engineer

DAK/MCM/lad

Enclosures: Table 1 - Monitoring Test Result Summary
Figure 1 - Graph of PCE Soil-Gas Concentrations
Sheet C1 - Site Plan with System Layout
Analytical Laboratory Certificates

TABLE 1

HISTORICAL MONITORING SUMMARY

Date	Line/Valve	PID (ppm) Before Carbon Scrubbing	PID (ppm) After Carbon Scrubbing	PCE (μL/L) Before Carbon Scrubbing
6-17-93	VES-3/VES-2/VES-1	78.0	0.0	130
7-2-93	VES-3/VES-2/VES-1	2.0	0.0	3.0
7-7-93	VES-3/VES-2/VES-1	2.0	0.0	4.0
7-26-93	VES-3/VES-2/VES-1	2.0	0.0	4.0
9-28-93	System Turned Off	---------->	---------->	---------->
10-18-93	VES-3	128	0.0	100
11-3-93	VES-3/VES-2/VES-1	25	0.0	7.0/<1.0/NT
11-11-93	VES-3	75	0.0	83.0
11-30-93	VES-3	17	0.0	2.0
12-15-93	VES-3	9.1	0.0	NT
1-5-94	VES-3	5.5	0.0	10

NOTES:

- PID utilized was equipped with a 10.2 eV lamp; calibrated with 100 ppm isobutylene standard gas.
- 10-18-93 system turned on

NT = not tested

Analytical Testing by EPA Method 601

Figure 1: Graph of PCE Soil-Gas Concen
Former Y-Pay-Mor Drycleaners
RZA AGRA, Inc. Project No. 11

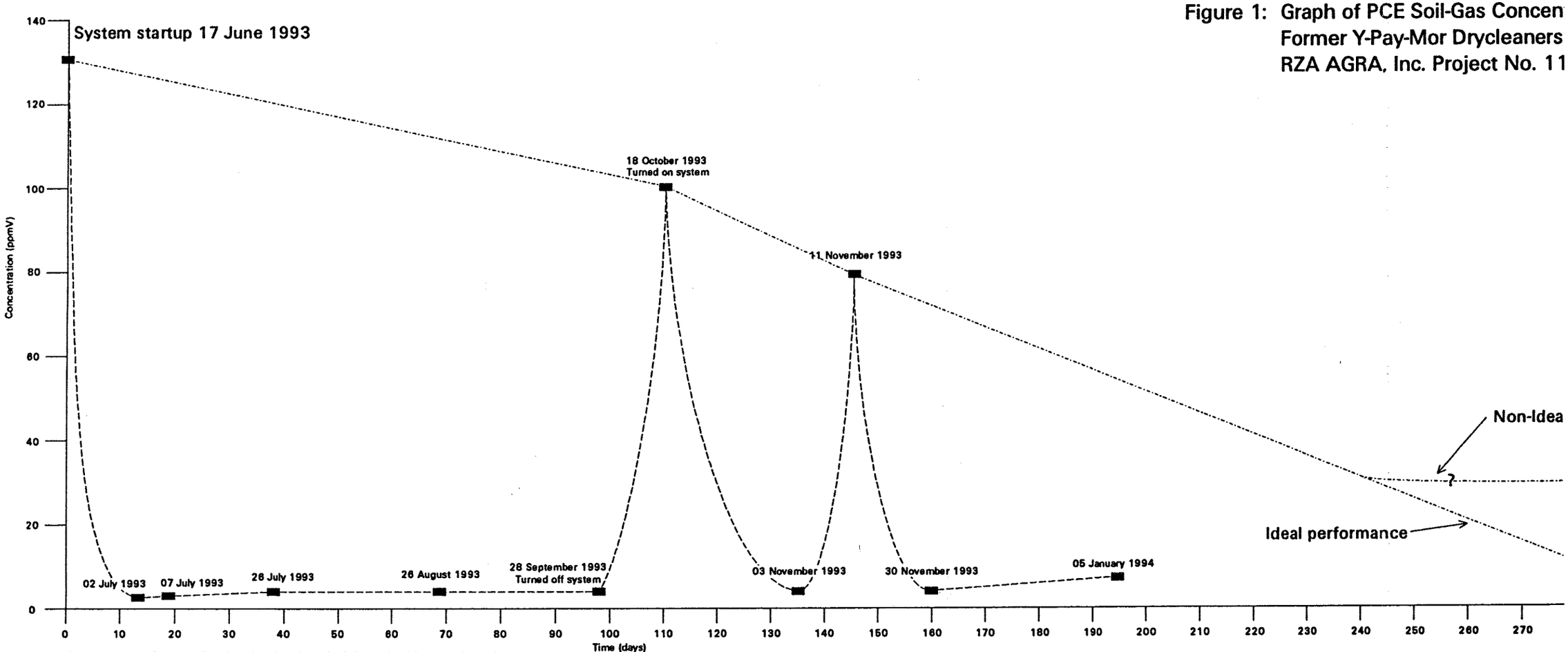

Note: ------ Concentration plotted against time; Line is interpolated between data points.
-·-·-·- Rebound PCE Soil-Gas concentration after system shut off/monitoring. Projected rebound concentration could lie between Non-Ideal/Ideal performence concentrations depicted.
Approximate average PCE mass removal for 200 days, approximately 4 lbs of equivalent PCE mass/unit volume air removed

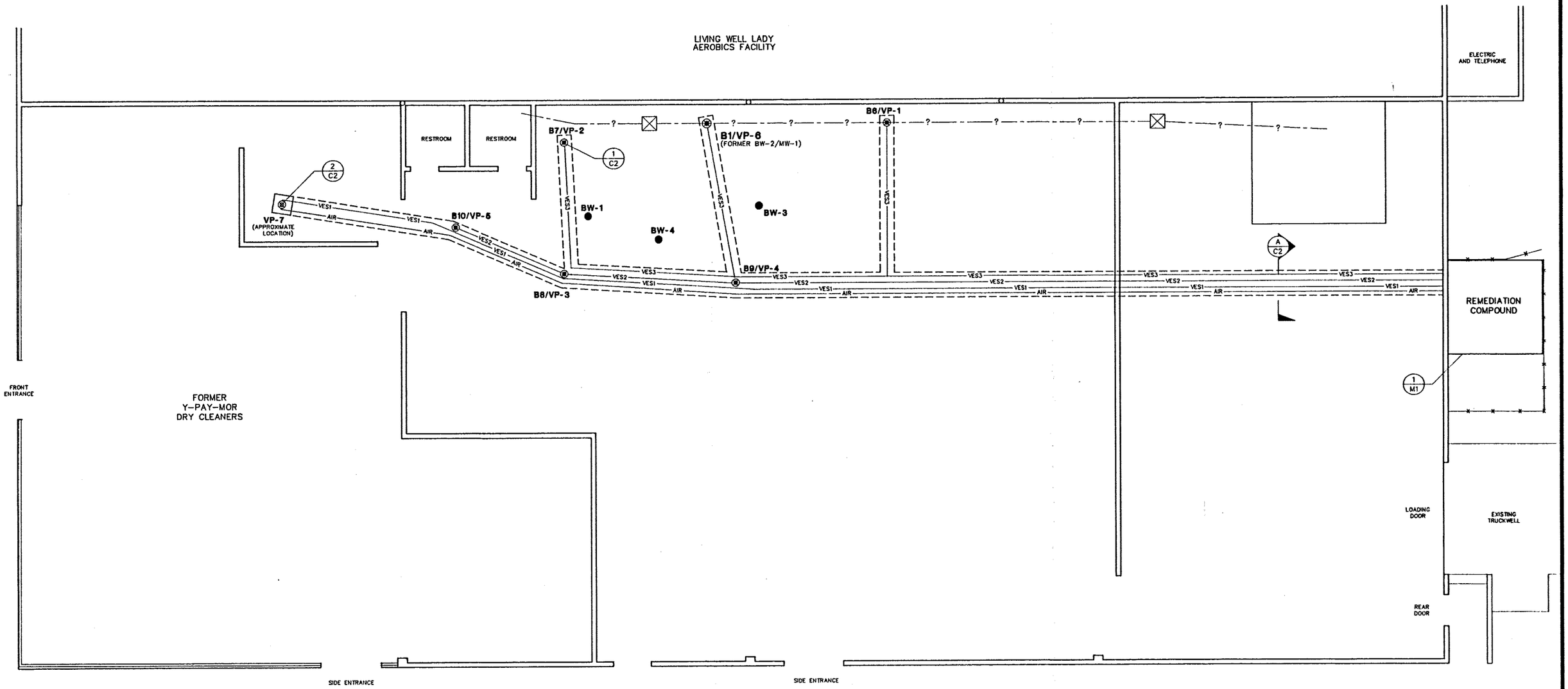

LEGEND

BW-4 ●	BORING NUMBER AND LOCATION RZA AGRA EMERGENCY RESPONSE, 6/9/92
B1/VP-6 ⊗	2" ID STAINLESS STEEL VAPOR POINT, AND BORING NUMBER
VP-7 ⊗	2" ID AIR INJECTION/VES WELL
— — —	APPROXIMATE LOCATION OF FORMER DRAIN LINE
⊠	EQUIPMENT DRAIN (FORMER)
[- - -]	LOCATION OF PROPOSED CONCRETE CUTTING
— VES —	VAPOR EXTRACTION HEADERS: 2" DIA. HDPE PIPE
— AIR —	AIR INJECTION HEADER: 2" DIA. HDPE PIPE

0 5 10
SCALE IN FEET

NO.	DESCRIPTION	INITIALS/DATE
3		
2		
1	VES WELL HEADERS	BDT 7/22/93

REVISIONS

Y-PAY-MOR DRY CLEANERS
2210 320TH STREET SOUTH
FEDERAL WAY, WASHINGTON

RZA AGRA, INC.
Engineering & Environmental Services
11335 N.E. 122nd Way, Suite 100
Kirkland, Washington 98034-6918
(206) 820-4669 FAX (206) 821-3914

SCALE	1"=5'	JOB NO.	11-07883-08
DESIGNED	CSS	DATE	4/5/93
DRAWN	MJF	DATE	4/5/93
CHECKED	--	SIGNED	
APPROVED	--	SIGNED	

SITE PLAN WITH SYSTEM LAYOUT

SHEET C1

DRAWING NO. \78\07883\08-C1.DWG

FRIEDMAN & BRUYA, INC.

ENVIRONMENTAL CHEMISTS

Date of Report: October 26, 1993
Date Received: October 18, 1993
Project: 11-07883-10, Northwest Bldg. Corp.
Date Extracts Analyzed: October 23, 1993

RESULTS FROM THE ANALYSIS OF THE AIR SAMPLE FOR TETRACHLOROETHYLENE USING EPA METHOD 601

Results Reported as μL gas/Liter

Analyte:	Tetrachloroethylene
Sample #:	
VEW-3	100

Quality Assurance

Blank	<0.1

10·18·93 1:35pm

RZA-AGRA
Environmental & Engineering Services
11335 Northeast 122nd Way
Kirkland, Washington 98034-6918
(206) 820-4669/FAX (206) 821-3914

№ 01543

Chain of Custody Record / Analysis Request

Project Name: Northwest Bldg Corp. Job No.: 11-07883-10
Project Manager: DALE KRAMER Phone #: 820 4669
Sampler: MARK JOHNSTON

Analysis Requested: (write preferred method in box)

RZA-AGRA Sample ID	Lab Samp ID	Date Collected	Time Collected	Matrix (S=soil, W=water, A=air)	# Containers/Preservation: 40 ml VOA /	1 L Glass /	8 oz Glass /	Teflon Bag		CHILL	PCE														Hold for Further Analysis	RUSH (see below)
VEW-3	44809-10	10 18 93	12 24	A				X			X															

RELINQUISHED BY SAMPLER:	RELINQUISHED BY:	RELINQUISHED BY:
Signature: [signature]	Signature:	Signature:
Printed Name: MARK T JOHNSTON	Printed Name:	Printed Name:
Firm: RZA-AGRA	Firm:	Firm:
Date/Time: 10-18-93 1330	Date/Time:	Date/Time:
RECEIVED BY:	RECEIVED BY:	RECEIVED BY:
Signature: [signature]	Signature:	Signature:
Printed Name: CL HICKS	Printed Name:	Printed Name:
Firm: F&B INC	Firm:	Firm:
Date/Time: 10-18-93 1:35pm	Date/Time:	Date/Time:

LABORATORY:
Total # Containers:
Condition of Containers?
Condition of Seals?

Special Handling
Turnaround:
- ☐ 8 hour
- ☐ 24 hour
- ☐ 5 business day
- ☐ 10 business day
- ☐ other _____ (#)business day

PURPOSE OF SAMPLING / COMMENTS:
Two Bags - Duplicate Samples

Form 100B

DISTRIBUTION: WHITE - return to originator; YELLOW - lab; PINK - retained by originator; GOLDENROD - to lab in advance

PAGE ____ OF ____

FRIEDMAN & BRUYA, INC.

ENVIRONMENTAL CHEMISTS

Date of Report: November 5, 1993
Date Received: November 3, 1993
Project: 7883-10, Y Pay Mor
Date Extracts Analyzed: November 4, 1993

RESULTS FROM THE ANALYSIS OF AIR SAMPLES FOR TETRACHLOROETHYLENE USING EPA METHOD 601 MODIFIED FOR HAND INJECTION

Results Reported as μL gas/liter air

Sample #	Tetrachloroethylene
VE S 3	7
VE S 2	<1

Quality Assurance

Blank	<1
100 ppm continuing calibration % Recovery	145%

RZA-AGRA
Environmental & Engineering Services
11335 Northeast 122nd Way
Kirkland, Washington 98034-6918
(206) 820-4669/FAX (206) 821-3914

11 · AMG · [illegible]
11.03.93
11000
11:55

Chain of Custody Record / Analysis Request

Project Name: [illegible] Job No.: [illegible]
Project Manager: [illegible] Phone #: [illegible]
Sampler: [illegible]

Analysis Requested: (circle, check box or write preferred method in box)

RZA-AGRA Sample ID	Lab Samp ID	Date Collected	Time Collected	Matrix (S=soil, W=water, A=air)	# Containers/Preservation: 40 ml VOA /	1 L Glass /	8 oz Glass /	TE/CAN x 2			CHILL	BTEX by EPA 8020 Soil / EPA 602 Water	WTPH-G	BTEX / WTPH-G	WTPH-HCID	WTPH-D	TPH by EPA 8015 Mod.	WTPH-418.1 Modified	TPH by EPA 418.1	LEAD EPA 6010 7420 7421 Soil Total / Dissolved EPA 7421 Water	TOTAL METALS	TCLP EPA 1311	PCBs EPA 8080 Soil EPA 608 Water	VOCs EPA 8010 8020 Soil EPA 601 602 Water	GC/MS EPA 8240 Volatiles	GC/MS EPA 8270 Semi-volatiles	PLE (Tetrachloro-ethylene)		Hold for Further Analysis	RUSH (see below)
[illegible]	45748	[illegible]	[illegible]					X			X																X			
2	45749	[illegible]	[illegible]					X			X																X			

RELINQUISHED BY SAMPLER:	RELINQUISHED BY:	RELINQUISHED BY:
Signature: [illegible]	Signature:	Signature:
Printed Name: [illegible]	Printed Name:	Printed Name:
Firm: RZA AGRA	Firm:	Firm:
Date/Time: 1500	Date/Time:	Date/Time:
RECEIVED BY:	RECEIVED BY:	RECEIVED BY:
Signature: Scott Olson	Signature:	Signature:
Printed Name: SCOTT OLSON	Printed Name:	Printed Name:
Firm: E & B, Inc.	Firm:	Firm:
Date/Time: 11/3/93	Date/Time:	Date/Time:

LABORATORY: E + B
Total # Containers: 2
Condition of Containers? GOOD
Condition of Seals?

Special Handling
Turnaround:
- ☐ 8 hour
- ☐ 24 hour
- ☐ 5 business day
- ☒ 10 business day
- ☐ other _____ (#)business day

PURPOSE OF SAMPLING / COMMENTS:

Form 100A

DISTRIBUTION: WHITE - return to originator; YELLOW - lab; PINK - retained by originator; GOLDENROD - to lab in advance

PAGE ____ OF ____

FRIEDMAN & BRUYA, INC.

ENVIRONMENTAL CHEMISTS

Date of Report: November 23, 1993
Date Received: November 11, 1993
Project: 11-7883-10, Y Pay Mor
Date Extracts Analyzed: November 22, 1993

RESULTS FROM THE ANALYSIS OF THE AIR SAMPLE FOR TETRACHLOROETHYLENE USING EPA METHOD 8010

Results Reported as μL gas/liter air (ppm by volume)

Sample #	Tetrachloroethylene
VES 3 (inf)	83
Quality Assurance	
Blank	<1
VES 3 (inf) (Duplicate)	80

RZA AGRA, Inc.

Engineering & Environmental Services
11335 N.E. 122nd Way, Suite 100
Kirkland, Washington 98034
(206) 820-4669 FAX (206) 821-3914

12359

Chain of Custody Record / Analysis Reque

Project Name: 4 PAY MOR Job No.: 11-7883-10
Project Manager: D. A. KIRMER Phone #: 820-4669
Sampler: DALE KIRMER

Analysis Requested: (circle, check box or write preferred method in box)

RZA AGRA, Inc. Sample ID	Lab Samp ID	Date Collected	Time Collected	Matrix (S=soil, W=water, A=air)	# Containers/Preservation: 40 ml VOA /	1 L Glass /	8 oz Glass /				CHILL	BTEX by EPA 8020 Soil / EPA 602 Water	WTPH-G	BTEX / WTPH-G	WTPH-HCID	WTPH-D	TPH by EPA 8015 Mod.	WTPH-418.1 Modified	TPH by EPA 418.1	LEAD EPA 6010 7420 7421 Soil / Total / Dissolved EPA 7421 Water	TOTAL METALS	TCLP EPA 1311	PCBs EPA 8080 Soil / EPA 608 Water	VOCs EPA 8010 8020 Soil / EPA 601 602 Water	GC/MS EPA 8240 Volatiles	GC/MS EPA 8270 Semi-volatiles	Tetrachloroethylene		Hold for Further Analysis	RUSH (see below)
VES 3 (INF)	4[illegible]	11-10-93	1600																								X			
	4[illegible]																													

RELINQUISHED BY SAMPLER:	RELINQUISHED BY:	RELINQUISHED BY:
Signature: [illegible]	Signature: Kim Hazard	Signature:
Printed Name: DALE A. KIRMER	Printed Name: Kim Hazard	Printed Name:
Firm: RZA	Firm: RZA	Firm:
Date/Time: 11-11-93 0930	Date/Time: 11-11-93 0935	Date/Time:
RECEIVED BY:	**RECEIVED BY:**	**RECEIVED BY:**
Signature: Kim Hazard	Signature:	Signature:
Printed Name: Kim Hazard	Printed Name:	Printed Name:
Firm: RZA	Firm:	Firm:
Date/Time: 11-11-93 0930	Date/Time:	Date/Time:

LABORATORY: FRIEDMAN BRUYA
Total # Containers: 2 Tedlar Bags
Condition of Containers?
Condition of Seals?

Special Handling
Turnaround:
- ☐ 8 hour
- ☐ 24 hour
- ☐ 5 business day
- ☐ 10 business day
- ☐ other _____ (#)business day

PURPOSE OF SAMPLING / COMMENTS:
Dispose of Tedlar Bags when finished
1 sample only

Form 100A

DISTRIBUTION: WHITE - return to originator; YELLOW - lab; PINK - retained by originator; GOLDENROD - to lab in advance

PAGE ____ OF ____

FRIEDMAN & BRUYA, INC.

ENVIRONMENTAL CHEMISTS

Date of Report: December 2, 1993
Date Received: November 30, 1993
Project: 11-7883-10, Y Pay Mor
Date Extracts Analyzed: November 30, 1993

RESULTS FROM THE ANALYSIS OF THE AIR SAMPLE FOR TETRACHLOROETHYLENE USING EPA METHOD 8010

Results Reported as μL gas/liter air (ppm by volume)

Sample ID	Tetrachloroethylene
VES 3 (inf)	4
Quality Assurance	
Blank	<1

AN & BRUYA, INC.
16th Avenue West
e, WA 98119

SAMPLE CHAIN OF CUSTODY

Send Report To:
Company: RZA AGRA
Address: 11335 NE 122 WAY SUITE 100
City, State, Zip: KIRKLAND, WA
Phone #: 820-4669
Contact: DALE KRAMER
Date:

SITE NO.	PROJECT NAME	PURCHASE ORDER #
11-7883-10	Y PAY MOR	

SAMPLERS (signature): Dale A. Kramer

PROJECT LOCATION:

REMARKS:

SAMPLE DISPOSAL INFORM.
- [x] Dispose ~~after 30 days~~ after analysis
- [ ] Return Samples
- [ ] Call for Instructions

SAMPLE #	Date/Time Sampled	Type of Sample	# of Jars	Lab Sample #	Analyses Requested
VES 3 (inf)	11-30-93 1515	AIR	TEDLAR	46398	PCE

SIGNATURE	PRINT NAME	COMPANY	Date	Time
Relinquished by: Dale A. Kramer	DALE A. KRAMER	RZA AGRA	11-30-93	1600 hrs
Received by: James E Bruya	James Bruya	F&BI	11/30/93	16:00
Relinquished by:				
Received by:				

FRIEDMAN & BRUYA, INC.

ENVIRONMENTAL CHEMISTS

Date of Report: January 11, 1994
Date Received: January 6, 1994
Project: 11-07883-10, Y-Pay-More
Date Extracts Analyzed: January 7, 1994

RESULTS FROM THE ANALYSIS OF THE AIR SAMPLE FOR TETRACHLOROETHYLENE USING EPA METHOD 8010

Results Reported as μL gas/liter air (ppm by volume)

Sample ID:	Tetrachloroethylene
VES-3	10

Quality Assurance

Blank	<1
VES-3 (Duplicate)	9

01 BP. A

RZA-AGRA
Environmental & Engineering Services
11335 Northeast 122nd Way
Kirkland, Washington 98034-6918
(206) 820-4669/FAX (206) 821-3914

№ 01610

Chain of Custody Record / Analysis Request

Project Name: Y-PAY-MORE Job No.: 11-07883-10
Project Manager: DALE KRAMER Phone #: 820-4669
Sampler: MARK JOHNSTON

Analysis Requested: (write preferred method in box) 100694 1:52

RZA-AGRA Sample ID	Lab Samp ID	Date Collected	Time Collected	Matrix (S=soil, W=water, A=air)	# Containers/Preservation: 40 ml VOA /	1 L Glass /	8 oz Glass /	TEDLAR BAG			CHILL	PCE																Hold for Further Analysis	RUSH (see below)
VES-3	4630/21	1-6-94	1205	A				X				X																	

RELINQUISHED BY SAMPLER:	RELINQUISHED BY:	RELINQUISHED BY:	LABORATORY:	Special Handling
Signature: [signature]	Signature:	Signature:		Turnaround:
Printed Name: MARK T JOHNSTON	Printed Name:	Printed Name:	Total # Containers:	☐ 8 hour
Firm: RZA-AGRA	Firm:	Firm:	Condition of Containers?	☐ 24 hour
Date/Time: 1-6-94 1340	Date/Time:	Date/Time:	Condition of Seals?	☐ 5 business day
RECEIVED BY:	RECEIVED BY:	RECEIVED BY:		☐ 10 business day
Signature: [signature]	Signature:	Signature:	PURPOSE OF SAMPLING / COMMENTS:	☐ other _____ (#)business day
Printed Name: Charla Ruiz	Printed Name:	Printed Name:	2 Bags - Duplicate Samples	
Firm: T+B I	Firm:	Firm:		
Date/Time: 010694/1:47	Date/Time:	Date/Time:		

Form 100B DISTRIBUTION: WHITE - return to originator; YELLOW - lab; PINK - retained by originator; GOLDENROD - to lab in advance PAGE ____ OF ____