OPERATIONS AND MAINTENANCE MANUAL

Groundwater Recovery and Treatment System

B&L Woodwaste Site

Milton, Washington

Prepared for:

B&L Woodwaste Site Custodial Trust
Olympia, Washington

Prepared by:

AMEC Foster Wheeler Environment & Infrastructure, Inc.
600 University St., Suite 600
Seattle, WA 98101
(206) 342-1760

Revised October 2015

Table of Contents

Tables

Drawings

List of Appendices

1.0 Introduction

This Operations and Maintenance Plan (O&M Plan) has been prepared to document plans and procedures and other information relevant to operation of the Groundwater Treatment Plant (GWTP) at the B&L Woodwaste Site (Site). The GWTP is a key component of the groundwater remediation remedy being implemented at the Site under the terms of Consent Decree No. 08-2-10610-7 (Consent Decree) and the 2008 Cleanup Action Plan (CAP) issued by the Washington State Department of Ecology (Ecology). Contaminated groundwater must be recovered to achieve remediation objectives described in the CAP; the recovered groundwater is treated in the GWTP for discharge to surface water, as authorized by National Pollutant Discharge Elimination System (NPDES) Permit No. WA0040321 (Permit). This O&M Plan has been prepared to document operation and maintenance procedures and to address the requirements of the Permit.

1.1 BACKGROUND

The Site is located within unincorporated Pierce County (Drawing G-01); the street address for the property on which the B&L Woodwaste Landfill is located is 1522 Fife Way East, Milton, WA. The GWTP is located in the southeast portion of the property (Drawings C-03 and C-04). Groundwater requiring treatment for removal of arsenic must be recovered from a network of recovery wells located beneath the Landfill and in the groundwater plume located outside the Landfill (Drawing C-04). The recovery wells must be operated as specified in the CAP and in compliance with regulations pursuant to the Model Toxics Control Act (MTCA). The sole source of water treated at the GWTP is from the two recovery well networks: the Landfill Network, which consists of two manifold legs collecting groundwater from the recovery wells within the barrier wall and the Outside Area Network, which recovers groundwater from high arsenic areas located outside the barrier wall. Groundwater is pumped from the wells using electrically operated pumps under automatic control. The automatic control system for the groundwater recovery wells is also used to control the GWTP, so that the wells can be controlled to maintain remediation objectives and the well pumps can be stopped as needed during GWTP upsets. This integrated system is intended to eliminate the need to bypass the GWTP and to minimize the potential for discharge of noncompliant effluent. The GWTP Permittee is the B&L Woodwaste Site Custodial Trust (Trust). The Trust is responsible for implementation of the overall remediation program at the Site, which includes operation of the GWTP.

1.2 RESPONSIBLE INDIVIDUALS

The names and phone numbers for the individuals responsible for operation, maintenance, and permit compliance are as follows:

Permittee:	Dan Silver, Trustee, (360) 754-9343	B&L Woodwaste Site Custodial Trust

Project Manager:	Larry McGaughey, P.E. (206) 342-1788	AMEC Environment & Infrastructure, Inc.
Process Engineer:	Charles Hand, E.I.T. (206) 342-1769	AMEC Environment & Infrastructure, Inc.

2.0 Groundwater Treatment Plant Design Criteria and Basis

The design criteria and basis provide a foundation for design of the GWTP. This section summarizes the engineering and design basis used for preparation of the plans and specifications.

2.1 DESIGN CRITERIA

Design criteria were developed for design of the GWTP. These criteria are summarized below for each component of the plant:

- Provide sufficient treatment capacity and operating flexibility to support operation of the groundwater recovery system to achieve CAP objectives.
- Remove site contaminants from groundwater and achieve discharge criteria that are protective of human health and the environment.
- Discharge treated water to the existing surface water drainage system.
- Size process equipment for the current design flow and for expected future flow reductions.
- Include standby redundancy for critical process equipment to minimize process downtime.
- Automate the main treatment processes to allow un-manned operation during weekends, evenings, and weekdays when an operator is not present.
- Include a centralized control system that can be remotely monitored via an internet connection.
- Provide sufficient storage for chemical feed solutions for at least 1 week of run time under average flow conditions.
- Comply with applicable, relevant, or appropriate regulations and standards (federal, state, and local).
- Conduct remediation work within wetland areas located on or adjacent to the B&L Property in accordance with applicable laws and regulations and in accordance with permits, as appropriate.
- Comply with applicable, relevant, or appropriate regulations and standards (federal, state, and local) for the remedy components included in this O&M manual.
- Comply with appropriate industry, professional engineering, and technical standards for the remedy components included in this O&M manual.

2.2 DESIGN BASIS

The general design basis for the GWTP is as follows:

- Groundwater recovery within the contained area beneath the Landfill will be capable of achieving a minimum head differential across the barrier wall of 0.5 feet (ft).
- The total pumping capacity for the GWTP is 150 percent of the recovery rates estimated to achieve the hydraulic control remediation objectives identified in the CAP.
- The GWTP was designed for a continuous, average flow capacity of 40 gallons per minute (gpm).
- The GWTP was designed to operate at a minimum continuous flow rate of 15 gpm and a maximum, short-term flow rate of 60 gpm to accommodate a range of potential recovery system operations.
- The GWTP was designed to treat the maximum concentration for the groundwater quality presented in Table 1, which is considered worst-case groundwater quality that will be recovered from inside and/or outside the Landfill.
- The GWTP was designed to achieve the following water quality criteria in the treated effluent as defined in the current Permit:
    - Arsenic, Total < = 5 µg/L
    - pH > 6.0 and < 9.0 standard units
- The GWTP process design was based on the results of a pilot treatability study conducted in 2010.
- The GWTP includes an automated control and data acquisition system, and was designed to operate under automatic control, with minimal direct operator attention during normal operations. The control and data acquisition system monitors groundwater levels in several piezometers and will allow remote monitoring and adjustment of operating parameters. The control and data acquisition system includes the following:
    - Automatic control of the groundwater recovery well pumps for the contained area and the areas outside the Landfill.
    - Automatic control of the GWTP.
    - Monitoring of transducers in selected groundwater wells and piezometers.
    - Remote autodialing and alarm capability.
    - Data logging/recording capability.
    - Remote monitoring and control capability for the groundwater recovery pumps, GWTP operations, and level monitoring instruments.

3.0 GWTP Process Overview

The groundwater treatment system has been designed with the primary goal of removing arsenic from contaminated groundwater recovered from the Site to achieve effluent concentrations that meet the discharge criteria summarized above. The treatment system process consists of chemical oxidation, raising pH to facilitate co-precipitation, clarification, lowering pH to improve adsorption, filtration, and adsorption. A plan view of the layout of the GWTP treatment plant and components is shown on Drawing C-03, Drawing M-01 and M-02 for the main floor and the mezzanine level respectively. A process flow diagram is presented in Drawing PFD-01. The treated groundwater will be pumped along a buried pipeline to the north pond (Drawing C-04). The solids stream from the clarification process will be stored in a sludge tank before being dewatered with a filter press; dewatering of sludge will be done periodically on a batch basis. The filter cake will be picked up and transported to an appropriate waste receiver for disposal. Treatment chemicals will be stored in tanks or transportable totes. All treatment equipment is located within the treatment building (GWTP main floor layout shown on Drawing M-01). The recovery well networks are shown on Drawing C-04. Recovered groundwater is collected in three piping manifolds that direct the recovered groundwater to the GWTP. Each line discharges to the Head Tank, located inside the GWTP Building on the mezzanine level (Drawing M-02).

3.3 UNIT OPERATIONS

The treatment process comprises of seven primary unit operations; including the Head Tank, the Oxidation Unit, the Co-Precipitation Unit, the Clarifier Unit, the pH Adjustment Unit, the Filtration Unit, and the Adsorption Unit. Ancillary units include the Sludge Management Unit (filter press for sludge dewatering) and an air compressor unit that provides air for equipment requiring compressed air. A centralized programmable logic controller (PLC) is used for data acquisition and automatic control of the entire GWTP and groundwater recovery system. Dewatered sludge from the filter press is collected in a roll-off container that will be picked up as needed for offsite disposal within a permitted commercial landfill. Treated effluent is sampled and discharged to the north pond, which overflows to an adjacent drainage ditch (Drawing C-04). The drainage ditch combines with the Surprise Lake Drain, and then flows beneath Interstate Highway 5 where it joins the Hylebos Creek, eventually discharging to the Hylebos Waterway and into Commencement Bay. The unit operations and ancillary units are described in more detail below.

Procedures are provided in Appendix A for operator guidance. A project management schedule was developed to simplify the operations and maintenance tracking for the plant (refer to Procedure P-001 in Appendix A). Alarm conditions and typical alarm set points are provided in Appendix B in the Control Narrative for the site.

3.3.1 Head Tank

The head tank receives pumped water from the three recovery lines shown on Drawing C-04. This unmixed tank provides flow equalization upstream of the subsequent unit operations. The tank volume is 400 gal and is an open-top tank equipped with a removable cover. Groundwater is discharged from the head tank by gravity flow through a flow meter and onto the downstream process units. The outlet includes a sample tap for the mixed influent groundwater. The head tank is equipped with a level switch to initiate emergency shutdown if a high level is detected.

3.3.2 Oxidation Tank

The oxidation tank provides mixing with potassium permanganate ($KMnO_4$) and provides reaction time to oxidize iron and arsenic; resulting in precipitation of ferric hydroxide and co-precipitation of arsenic. Based on the 2010 treatability testing, $KMnO_4$ was selected as the preferred oxidant. The addition of $KMnO_4$ causes both arsenic (III) and iron (II) to be oxidized to arsenic (V) and iron (III), respectively. The higher oxidation states of arsenic and iron precipitate more readily and arsenic (V) is amenable to adsorption onto the iron hydroxide floc. The water then flows out from the oxidation tank under gravity flow.

The oxidation tank has a working volume of 1,659 gal, which provides 41 minutes of residence time at the average design flow rate (40 GPM). Mixing is provided by a top-mounted 1.0 horsepower (HP) mixer. The tank is completely mixed to ensure sufficient distribution and reaction of the $KMnO_4$, while reducing the likelihood for short-circuiting.

During the 2010 treatability testing, the optimal dosage for $KMnO_4$ was determined to be 145 milligrams per liter (mg/L) of groundwater. The dosage depends upon the influent concentration of permanganate-consuming constituents (i.e., iron, arsenic, manganese, and oxidizable organics). The $KMnO_4$ feed has been designed to provide a range of dosages that can be set by the operator to support the required flexibility to accommodate changes in the groundwater chemistry and to service the full range of influent groundwater flows. The actual dosage will be adjusted as needed by the operato, based on testing the influent for arsenic, iron, and manganese and monitoring the oxidation reduction potential (ORP) in the oxidation tank to avoid over- or under-dosing.

Preparation of $KMnO_4$ feed solution is done manually. 5 gallon pails of granular, crystalline $KMnO_4$ are purchased from a local chemical supplier and delivered to the treatment building as needed. The pails are loaded into the $KMnO_4$ tank by sealing the top of the pail with a fitted lid that contains a slide valve and a rubber gasket. The gasket is then connects to a vertical PVC pipe that runs from the mezzanine level down into the $KMnO_4$ tank. The vertical pipe extends from the mezzanine level into the $KMnO_4$ tank, below the liquid level in the tank. The pipe outlet is kept submerged during feed solution preparation to prevent fugitive dust. In addition, a constant water stream is added to the sealed lid to assist in cleaning out the pail and the piping and to prevent fugitive dust. A new batch of feed solution is typically prepared when the remaining volume of feed solution in the tank is approximately 400 gallons or less. The operator

will add the correct amount of water to the tank based on the volume of solution to be prepared (determined by the tank level). The operator adds sufficient $KMnO_4$ and the correct volume of water to produce the target concentration in the make-up tank. The make-up tank has a volume of 1,800 gal, which allows for more than one weeks of continuous operation for each batch under normal flow conditions. The maximum target $KMnO_4$ feed solution concentration is 10 grams (g) of powdered $KMnO_4$ per liter (L) of solution (100 lb of $KMnO_4$ per 1200 gallon batch). The feed concentration is below the published solubility of about 43 g/L water at 10°C (Lange 1999). Given the water temperature of kinetics for dissolution of the solid permanganate at the site, feed solutions higher than 10 g/L should be avoided to ensure that all of the $KMnO_4$ dissolves. The $KMnO_4$ feed tank is located within a secondary containment area to contain spillage in the event of tank or line failure.

The $KMnO_4$ feed solution is fed to the oxidation tank via a chemical dosing skid that includes redundant diaphragm metering pumps to ensure accurate and continuous dosing. The solution is fed to the system at a rate that is proportional to the influent groundwater flow rate, as measured in the discharge from the head tank. The pumping rate is controlled by the PLC. Based on treatability studies and continuous monitoring of the GWTP, typical target doses range from 10-20 mg/L of $KMnO_4$ in the recovered groundwater. The feed ratio will be adjusted by operations personnel as necessary to achieve proper treatment and to avoid overdosing (feed ratio between 500 and 1000 for 20 and 10 mg/L, respectively). Concentrations of the permanganate-consuming constituents in the untreated groundwater will be monitored to establish and control the proper $KMnO_4$ feed rate.

An ORP sensor and transmitter is installed in the oxidation tank to monitor ORP and ensure appropriate oxidation conditions are maintained. The ORP sensor will be monitored by the PLC. A warning alarm will be initiated if the ORP is outside of the expected range to alert the operator that there is a potential problem with the $KMnO_4$ dosing system so that corrective action can be taken.

3.3.3 Co-Precipitation Tank

Partially treated groundwater flows by gravity from the oxidation tank to the co-precipitation tank. This tank is completely mixed by a 1.0 HP, top-mounted mixer. Lime slurry is added to the co-precipitation tank under automatic control to raise the pH to a target value of 9.1-9.2 in order to induce co-precipitation of arsenic with the iron that is present in the groundwater. The ferric iron (Fe^{+3}) formed in the Oxidation Tank will form hydroxides at the elevated pH and precipitate. Arsenic (V) will adsorb to the floc and thus will be removed with precipitated iron hydroxides. The addition of the lime also adds solids surface area and charge to aid in the co-precipitation process. The co-precipitation tank also receives sludge recycle from the clarifier to provide seed to support the formation of rapid settling solids. Coagulant is also added to the co-precipitation tank to facilitate the formation of larger and denser floc through charge destabilization and increased particle interactions. The co-precipitation tank has a working volume of 1,659 gal, which provides a 41-minute retention time at the design average flow rate. The co-precipitation tank is equipped with a pH sensor that is monitored by the PLC to

automatically control the pH of water in the tank through a proportional, integral, and derivative (PID) control loop.

In order to induce the pH change, a lime dose of 5.95 g of dry hydrated lime [$Ca(OH)_2$] per gallon of groundwater was required in the treatability testing. Based on current operations, a lime dose of 1.5 g of dry hydrated lime is required per gallon of groundwater. Hydrated lime is delivered to the Site in the form of a slurry, at a concentration around 3.5 lb $Ca(OH)_2$ per gallon of water. Delivery and feed of the lime in this manner eliminates the need for a complex and high maintenance slaking or dry chemical feeding process on site. Lime slurry will be delivered in 2,000-gal bulk loads and stored in a 5,509-gal lime storage tank. The maximum amount of lime will not exceed 4,580 gallons in the lime storage tank. Lime is then diluted to a concentration around 1.81 lb of dry hydrated lime per gallon in the lime storage tank (corresponding to a specific gravity of 1.13) to prevent system clogs from occurring resulting in periods of shutdown for maintenance of the lime feed system. The lime storage tank is located within a secondary containment area to contain any spills in the event of tank or line failure. The storage tank is continuously and completely mixed by a 5.0 HP top mounted mixer to prevent sedimentation. The lime within the lime tank is constantly recirculated in a loop via a large peristaltic pump to prevent deposition and scale formation in the lime piping. Lime is fed to the co-precipitation tank under PLC control by a small peristaltic dosing pump drawing from the discharge side of the lime recirculation line. The lime slurry feed rate is automatically controlled by the PLC to achieve the target pH in the co-precipitation tank.

At the design average groundwater flow rate (40 gpm) and a diluted concentration of 1.81 lb of dry hydrated lime per gallon, the estimated consumption of lime slurry is 60 gallons per day (gal/d). Each load of slurry (2,500 gal) would last approximately 40 days under these conditions. Lime is delivered by parking the truck at a specially designed delivery station. A concrete pad and sump was constructed along the north side of the GWTP building to contain any spills that may occur during lime delivery. Prior to delivery, the operator manually closes a valve on the spill collection sump associated with the delivery pad. Delivery hoses are connected to an Environ-Box, designed to minimize spillage during connection/disconnection. If spillage occurs during delivery, it would be contained by the curbed delivery pad and sump; spillage would be cleaned up by the operator. If no spillage occurs, the operator will reopen the sump valve, to direct stormwater runoff from the pad to normal drainage channels.

3.3.4 Clarifier Unit

Groundwater flows by gravity from the co-precipitation tank to an inclined plate clarifier unit to separate the floc from the treated water. The clarifier unit includes an integral flash mix tank and a flocculation tank, each equipped with a mixer. A polymer flocculant will be added directly to the flash mix tank under automatic control at a rate proportional to the influent groundwater flow rate. The feed rate will be determined by the process engineer.

The polymer is purchased as neat liquid in 5-gal pails, and diluted to a concentration of 0.25 percent (wt/wt) in batches to allow for the organic polymers long carbon chain to unfold. An

automated make down system is used to prepare the polymer feed solution as needed. The polymer feed solution is prepared and stored in a 60-gal feed tank. The small feed tank was selected to ensure short storage times for dilute polymer, which will minimize degradation and ensure that freshly prepared polymer is provided to the treatment process. The feed tank is equipped with a low-speed mixer that is operated continuously. New batches of feed polymer will be automatically prepared when the level in the polymer day tank reaches the low-level set point. A cone bottom tank is used to feed the neat polymer into the make down tank with the use of a small diaphragm pump.

The rapid-mix tank provides complete mixing of the groundwater with the dilute polymer solution and a short residence time. Based on an average design flow rate of 40 GPM and a target polymer concentration of 0.4 ppm in the wastewater based on bench scale testing, approximately 0.03 gallons of neat polymer will be dosed per day into the rapid mix tank (or a 5 gallon pail will last approximately 16 days). The slurry from the rapid-mix tank flows by gravity to the flocculation tank to provide a period of slow mixing to allow for floc formation. The flocculated groundwater then flows into the inclined plate settler, allowing the solids to settle to the sludge hopper and the clarified groundwater to overflow the effluent weir. The clarifier provides an effective settling area of 160 square feet (ft^2), which provides an overflow rate of 360 gallons per day/ft^2 (gpd/ft^2) at average design conditions (40 gpm) , and 540 gpd/ft^2 at maximum design conditions (60 gpm). Sludge from the sludge hopper is pumped to the sludge management process, which is described below.

3.3.5 pH Adjust Tank

The clarifier unit overflows by gravity to the pH adjust tank where the water pH is adjusted down to achieve effective adsorption of the remaining arsenic in the adsorption columns. Adsorbent media life in the final treatment stage is longer if the water pH is slightly acidic. The target pH for the pH adjust tank is in the range of 6.1 – 6.2. The pH is reduced by the addition of 93-98 percent sulfuric acid (H_2SO_4) under automatic pH control. The pH adjust tank has a working volume of 1,420 gal, providing a residence time of 35-36 minutes at the average design flow rate. The pH tank is completely mixed with a 1.0 HP, top-mounted mixer.

Acid is added to the pH adjust tank via automatic dosing pumps. Redundant duplex diaphragm metering pumps are used to feed acid to the pH adjust tank. The acid-wetted parts of the pumps and the acid feed tubing are compatible with concentrated sulfuric acid. The rate of acid addition is controlled by the PLC based on a PID control loop, using the continuous pH sensor in the pH adjust tank. The dosing rate under average flow conditions is approximately 0.14 gallons per hour (gal/hr). The Teflon acid feed line is enclosed in a protective CPVC line to contain acid if the Teflon feed line fails. The CPVC protective casing is designed to drain either to the pH adjust tank or the acid containment sump.

Concentrated acid will be delivered in 265-gal acid totes. The totes are placed on the acid containment sump upon delivery. The sump is lined with acid-resistant coating; providing secondary containment in the event of a leak or spill. Two totes are present at any time; one

tote is used to supply acid to the process while the second tote provides extra acid to ensure a constant supply. The level of acid in each tote is continuously monitored by the PLC to monitor inventory and identify spills of acid from the totes. There is also an optical fluid sensor in the acid dosing skid to detect any leaks in the dosing skid. If a leak is detected, an alarm will be triggered to notify the operator.

Water from the pH adjust tank is pumped to provide sufficient pressure to force the water through the filters and the adsorption columns and discharge treated water to the North Pond via Outfall #001 (Drawing C-04). The pH adjust tank is equipped with a continuous level sensor and a high level switch. The continuous level sensor is used as the control signal for the PLC to automatically regulate the speed of the discharge pump based on a PID loop for controlling tank level. A redundant discharge pump is provided in case of failure or maintenance requirements on the lead pump. Pump speed is controlled by the PLC to maintain a constant level in the pH adjust tank. The level sensor in the pH adjust tank will issue an alarm in the event the high level setpoint is detected. If the high-high level is detected, the high level switch will initiate a complete emergency shutdown of the groundwater recovery and treatment system to prevent overflow of the process units.

3.3.6 Filter Units

Following clarification, the water is filtered in a two-step process. Water is pumped from the pH adjust tank through a duplex-bag filter unit to remove suspended solids that are larger than 10 µm to prevent clogging of the downstream filter/adsorber units. Once through the duplex-bag filter unit, the water flows through a duplex-cartridge filter unit to remove remaining suspended solids down to 3 µm to prevent plugging of the adsorption unit. Two bag filter housing units are present in the duplex system; each unit was sized for a hydraulic capacity up to 220 GPM to provide extra solids loading capacity. Two cartridge filter units are present in the duplex-cartridge filter unit; each unit is capable of handling maximum design flow (up to 60 gpm). Depending on the solids loading to the filter units, one unit may be kept online, while the offline filters are fitted with fresh cartridges and a bag and placed into service when the online units are clogged, as indicated by the pressure differential measured across the units. Pressure loss across the filter unit is monitored continuously by the PLC; an alarm is issued if high pressure loss (indicating plugging of the filter) is detected. Switching of the filter units and replacement of the cartridges and bags is done manually, as needed to maintain acceptable pressure drop readings across the filter housings.

3.3.7 Activated Alumina Adsorber Unit

The final unit operation to achieve the low-level arsenic treatment target (5 µg/L or 5 ppb) is adsorption onto activated alumina in the adsorber unit. After passing through the filters, the groundwater flows to the two adsorption columns operated in a series configuration. The activated alumina requires an empty bed contact time of 5 minutes, which equates to a 200-gal (media volume, not including freeboard) adsorption column. The empty bed contact time was recommended by the media manufacturer and verified during the 2010 pilot treatability testing.

The media is expected to function for 4,300 bed volumes before significant breakthrough based on monitoring data. After 4,300 bed volumes of groundwater have been treated or breakthrough of arsenic is detected in samples collected after the second column, the media in both columns will be replaced. Breakthrough is defined as a concentration of 3 ppb or more as measured in the effluent side of the lag unit. The spent media will either be loaded into an onsite garbage roll-off that is picked up and transported to an appropriate waste facility for disposal or loaded directly into a vactor truck for offsite disposal at a permitted, commercial waste disposal facility. Each adsorber is equipped with a continuous differential pressure sensor so that pressure drop can be monitored by the PLC. An alarm is issued if high pressure drop is detected, indicating that the affected adsorber has become plugged and requires operator attention and backwashing.

Effluent from the second adsorber column is the final, treated effluent that is directed to the North Pond for discharge via Outfall #001. The discharge from the second adsorber flows through a pH sensor (AIT 450 on Drawing P&ID-04) where final effluent pH is monitored. An alarm will shutdown the plan if the pH drops below 6.0 SU as measured in the effluent pH sensor. The water also flows through the final effluent flow meter, FIT 490 (Drawing P&ID-04), where the total flow rate is recorded for reporting the daily discharge volume. The quality of the final treated effluent is monitored by collecting a composite sample tap located adjacent to the flow meter, inside the GWTP building. In addition, a weekly pH grab sample is collected from the effluent sample port and reported on monthly DMRs.

3.3.8 Sludge Storage and Dewatering Unit

Excess sludge generated from treatment of groundwater is collected and dewatered for disposal in a permitted, offsite landfill. Underflow from the clarifier settles to the bottom of the clarifier and pumped to the sludge storage tank with a pneumatic diaphragm pump operated on a timer control system. The sludge storage tank has a working volume of 5,850 gal and is continuously mixed by a 1.5 HP top-mounted mixer. The sludge will be accumulated in the storage tank for batch-wise dewatering by a filter press. Filter press operation requires continuous operator attention, so the sludge dewatering process will be manually initiated when an operator is on-site. The sludge storage tank is equipped with a continuous level sensor and a high level switch that are monitored by the PLC. Alarms are initiated when high inventory or high levels are detected in the sludge storage tank. Polymer flocculant can be added to the sludge storage tank by the operator to facilitate sludge dewatering.

When a sludge dewatering batch is initiated, the sludge is pumped from the sludge storage tank to the filter press by a peristaltic hose pump until a set pressure is obtained in the feed to the filter press (not to exceed 110 psi). The filtrate flows from the filter press by gravity into the head tank to ensure that all components under flow control are adjusted accordingly to account for the increased flow. At the end of each filter press cycle, as determined automatically by the mechanically built pressure at the filter press feed, the press will be opened and the sludge cake is discharged from the plates into a roll-off container located below the filter press. The roll-off container will be removed and replaced as necessary for disposal of the dewatered sludge. The

filter press produces dewatered sludge that meets the paint filter test and is suitable for landfill disposal.

The solids loading to the clarifier is estimated to be 144 lb dry solids per day, based on the average design flow rate. This estimate includes a 15 percent safety factor over the theoretical value, which is based on the influent water quality and treatment chemistry. It is estimated that under average flow conditions, two filter press cycles will be needed each week. The sludge storage tank will have enough capacity for 5 days of storage under average groundwater flow rates and the groundwater quality observed during the 2010 pilot treatability testing.

Approximately 960 lb of dry solids in the dewatered filter cake would be produced each week under average design flow conditions. Assuming a conservative (i.e., low) cake solids concentration of 25 percent (wt/wt), the expected total cake weight per week is 3,830 lb (wet). Based on these quantities, the roll-off container filled with filter cake will require removal for off-site disposal once approximately every 8 weeks.

An air compressor provides compressed air at approximately 120 psi for operation of the pneumatic controls and valves used by the filter press. Compressed air is necessary for operation of the sludge storage and dewater unit. The air compressor includes an accumulator vessel that feeds compressed air to the distribution lines. A pressure switch on the accumulator vessel is monitored by the PLC to initiate a low pressure alarm, indicating compressor failure.

3.3.9 Instrumentation and Controls

Instrumentation for the GWTP is depicted in the process and instrumentation diagrams (P&IDs, Drawings P&ID-00 through P&ID-05). The system has been designed to be automated to the extent practical. It is estimated that the system will require four to five visits to the site per week by the operator to ensure continuous and effective operation. The frequency for operator attention may be greater during periods of high groundwater flow, but is not expected to be less at flow rates below the design average.

The GWTP includes significant instrumentation for control and monitoring purposes. The treatment equipment and instrumentation will be automated with a single, centralized PLC. The system operations can be monitored via a human machine interface (HMI) located in the treatment building. The system also has remote monitoring and data collection capabilities through an internet interface to allow the operator to view the status of the system at any time from an offsite location. The control system also has dial-out functionality so that critical alarms will be issued by an automated call to the offsite personnel by telephone. The control system includes data logging and tracking of most process instruments, as shown on the P&IDs.

The automated control system for the GWTP includes an autodialer that is prompted to call offsite operators/responsible individuals if process or landfill alarm conditions occur, including shutdown of specific system components. Appendix B summarizes the current configuration of

the alarm conditions for the GWTP. These setting may be modified as approved by the Process Engineer.

3.3.10 Treatment System Building

The GWTP is located within a dedicated building to provide security, limit the generation of contaminated runoff, and to contain any spills from process equipment and tanks. Key features of the GWTP building are described below.

3.3.10.1 Building Pad

Due to the historical flooding events in the vicinity of the Site during periods of heavy rainfall, a building pad was constructed at an elevation of approximately 20 ft above sea level (ASL) to match the elevation of the existing access road around the Landfill. This elevation has been consistently above recent flood elevations and is above the elevation of the 100-year flood (MGS Engineering Consultants et al. 2004).

The floor of the building is a concrete pad providing curbing and containment for the GWTP and for lime slurry delivery to the building. A concrete pad and sump is located north of the building to contain any spills or releases of lime slurry during delivery; the concrete pad is sloped to a collection sump. This will provide spill containment in the event of an accidental release from the lime slurry truck during unloading, preventing lime from entering the surrounding wetland areas. An environmental containment enclosure is installed on the outside of the building, beneath the lime connection point, to collect any drips and spills from the hose connection during lime truck unloading.

The lime delivery sump includes a sluice gate, which when opened will allow stormwater collected on the concrete pad to flow north-east, following the normal drainage pattern. Written delivery procedures specify that the operator must close the sluice gate before a lime truck is brought on to the Site and is parked on the concrete pad. If a spill occurs, the lime will be held in the sump and on the concrete pad where it can be collected and disposed of properly. Following delivery or cleanup of any spills, the sluice gate will be reopened. A complete stormwater pollution prevention plan is included in Appendix C.

3.3.10.2 Treatment Building

The building includes two man-doors and two overhead doors (Drawing M-01). The large roll-up door provides access for moving the onsite waste and dewatered sludge roll-off bin in and out of the building. The smaller roll-up door provides access for bulk chemical deliveries and equipment. The building is electrically heated to maintain an interior temperature above a minimum of 50°F during cold weather conditions. Exhaust fans are provided to vent moisture and prevent excess heat accumulation in the summer.

The concrete floor inside the GWTP building provides containment for the GWTP process equipment. A separate containment floor that is 1 foot lower than the elevation of the main floor

of the building provides a drainage area for process equipment during regular operations and management and in case of spills or leaks (Drawing M-01). This lower floor is drained by a sump at the end of a collection trough that runs from the south-east side of the building near the overflow of the clarifier to the west, near the polymer make down skid. All of the treatment process equipment and vessels along with the polymer skid are located within this lower area, while the treatment process chemicals are located in separate containment areas on the north side in the GWTP building. The sump in the lower containment area is used to collect polymer dosing pump seal water, any spills, and wash water generated during equipment maintenance. Water collected in the sump is pumped to the oxidation tank or sludge tank for subsequent treatment in the treatment process. The water level in the sump is monitored continuously by the PLC to detect spills or excess accumulation of liquids in the containment area. If a high level is detected in the sump, the PLC will issue an alarm and initiate emergency shutdown of the groundwater recovery system and the GWTP. As noted on Drawing M-01, separate secondary containment is provided for the lime slurry and $KMnO_4$ feed tanks as well as for the sulfuric acid totes. The sulfuric acid totes are placed in a separate containment area as the lime and potassium permanganate to prevent any adverse reactions from occurring from the mixture of incompatible chemicals.

A separate 8'x10' storage shed is located west of the front of the GWTP in the gravel driveway area (Drawing C-03). The storage shed is used to store dry goods such as filters and replacement pump kits.

3.3.10.3 Building Layout

The building layout is shown in Drawings M-01 and M-02. The building includes a small laboratory area, a small office, and a restroom. The electrical room, which includes the PLC, is located on the mezzanine level. A computer used for monitoring and controlling the GWTP is located in the office. A safety shower and eye wash fountain is located on the main floor of the building, outside the lab/office area. The building layout was developed so the process equipment was in a logical sequence, optimizing piping lengths and supporting system operations and maintenance.

3.3.10.4 Security

Due to concerns over potential property damage or malicious interference, all process equipment and chemical storage tanks are housed inside the treatment building. The treatment building doors will remain locked at all times when an operator is not present. The building has protected windows to minimize the potential for vandalism or unauthorized building entry. The roll-off containers for the solids storage will be stored indoors. The groundwater recovery well heads are each contained in a locked well vault. A monitored security camera system is in place to provide continuous surveillance of the building for intruders during times when an operator is not present at the site. The building area is enclosed with a 3-stranded barbed-wire fence. One gate is present at the entrance to the site, one gate is present at the entrance to the Landfill area, and two gates are present at the north end of the fenced area. All gates are kept locked unless the area is in use by site personnel.

3.4 TREATMENT OBJECTIVES

The B&L Woodwaste Site GWTP is a fairly simple physical-chemical treatment system. The overall treatment objective is to reduce arsenic concentrations in the effluent so that they are below the MTCA cleanup level of 5 µg/L, while maintaining an effluent pH between 6.0 and 9.0 standard units. To achieve this, the following objectives have been established for individual unit operations:

Oxidation Tank:	Achieve complete oxidation of arsenic (from As^{3+} to As^{5+} and iron (from Fe^{2+} to Fe^{3+})
Co-Precipitation Tank:	Achieve a pH of 9.1-9.2 in the tank to maximize co-precipitation
pH Adjustment Tank:	Achieve pH of 6.1 - 6.2 in the tank to increase adsorption media life and increase the effectiveness of arsenic adsorption onto activated alumina

4.0 Groundwater Treatment Plant Operations and Maintenance Procedures

Each of the unit operations of the GWTP has Operations and Maintenance Procedures (O&M Procedures) associated with it. These procedures are presented in Appendix A. Note that these O&M Procedures are intended to be standalone documents, designed to provide operators with technical and health and safety information needed for operations tasks. As these procedures are intended to be used independently for operations tasks, each procedure has its own page numbering and the numbering does not follow page numbering in this O&M Plan. In general, specific valves and/or equipment are referenced by their number, as specified on the P&ID drawings (Drawings P&ID-00 through P&ID-05). In addition, certain process parameters must be checked on a weekly, bi-monthly, or monthly basis to ensure smooth process performance. These inspections and measurements are provided in Appendix A (Procedure P-001).

These procedures provide an overview of health and safety issues and requirements specific to the tasks addressed by the procedure. The procedures also identify any special tools or personnel protective equipment required to complete the work. The procedures also provide a step-by-step process to properly complete the task. These procedures are continuously reviewed and may be updated as needed to ensure the work is performed safely and properly. This manual will be updated as necessary when procedures are updated or if equipment is replaced.

5.0 Groundwater Treatment Plant Maintenance

5.1 MAINTENANCE PROCEDURES

See Appendix A for individual component maintenance procedures.

5.2 SPARE PARTS INVENTORY AND SUPPLIERS

The treatment system has several components which require regular maintenance supplies. See below for individual items which are anticipated to be needed on a fairly regular basis. An inventory list with contacts and equipment information is provided in Table 2.

6.0 Health and Safety

Health and safety of workers and the general public are of primary importance to operation and maintenance of the GWTP. Operation and maintenance of the Site GWTP is covered by MTCA and state and federal laws pertaining to remediation of contaminated sites. Therefore, operation of the GWTP is subject to the hazardous waste operations health and safety requirements of 29 CFR 1910, commonly referred to as HAZWOPER. A site-specific Health and Safety Plan (HASP) has been prepared to cover operations and maintenance work to be performed at the Site, which includes the GWTP. This HASP is included as Appendix D to this O&M Plan. A copy of the HASP is kept at the GWTP office; all Site workers are required to become familiar with the HASP and to sign the plan, acknowledging that they have read it and are familiar with its requirements. As noted previously, health and safety procedures and required safety equipment have been included in the task-specific O&M procedures included in this O&M Plan. All operations personnel are trained in Site hazards, handling hazardous materials used in the process, and in the safety features associated with the GWTP process and the building.

Additional health and safety considerations have been incorporated into the facilities and control system. These considerations are as follows:

- A safety shower and eye-wash fountain is located outside the laboratory, and is maintained functional and available for emergency use.
- In the event that either the safety shower or eye-wash fountain is used, the PLC will issue an alarm to offsite personnel that the operator has activated emergency equipment.
- Emergency shutoff switches have been placed outside each man door and near the safety shower. Activation of the shut off switches causes the PLC to safely shut down the groundwater recovery wells and the GWTP and to issue an alarm to offsite personnel.
- The secondary containment system for the lime and $KMnO_4$ storage tanks includes a level sensor that will initiate an offsite alarm and a safe shutdown of the groundwater recovery system and the GWTP if liquid is detected in the containment area.
- The secondary containment system for the sulfuric acid dosing skid includes an optical liquid sensor that will initiate an offsite alarm if liquid is detected in the containment area.
- The secondary containment system for the GWTP includes a level sensor that will initiate an offsite alarm and a safe shutdown of the groundwater recovery system and the GWTP if a large quantity of liquid is detected in the containment area.

- The building is equipped with smoke detectors, fire alarm, and a sprinkler system that will be activated if a fire is detected. The fire alarm system also issues an alarm to the local fire department and offsite personnel.
- Local fire department officials have been notified of the hazardous materials inventory for materials that are present in the GWTP building. The building has been classified as an H-3 building. Signage is displayed on the building and tanks identifying the hazards associated with each of the process chemicals.
- Manual fire extinguishers are located outside the electrical room on the mezzanine and near the two main doors.

7.0 Emergency Plans and Procedures

Emergencies can happen due to a variety of causes. None of the process chemicals are explosive. Sulfuric acid is a water reactive chemical that will react violently when in contact with water; the sulfuric acid handling and storage system is specifically designed to minimize the potential for contact with water, even in the event the acid containers leak and the contents are released. Therefore, emergencies are expected to be associated with spills, releases, worker exposure to process chemicals, or other worker safety issues. Emergency response to worker exposure or worker safety is addressed in the HASP. Emergency response related to process failure or spills/releases is discussed below.

As noted above, the system is designed to contain spills or releases from storage tanks and to safely shut down the groundwater recovery system and the GWTP. An emergency shutdown as discussed above may be initiated by unsafe process conditions as monitored by the control system, from the activation of a manual emergency shutdown button in the GWTP building, or when a shutdown is initiated by remote access to the control system. Three emergency shutdown buttons are readily available to workers in the building; activation of any one of the emergency shutdown buttons will initiate a safe shutdown of all groundwater recovery wells and the complete GWTP, including all chemical feed pumps. Appendix B, provides more information on how the system will be safely shut down in case of an emergency shutdown.

7.1 SPILL RESPONSE COORDINATOR

The following individual has been designated as the Spill Response Coordinator accountable for Site spills:

Spill Response Coordinator

Individual: Charles Hand, MSCE, E.I.T., Process Engineer

Phone Number: Office 206-342-1769

Mobile 509-499-8363

The following individual has been designated as the alternate Spill Response Coordinator for the Site spill response:

Alternate Spill Response Coordinator

Individual: Larry McGaughey, Ph.D., P.E., Project Manager

Phone Number: Office 206-342-1788

Mobile 206-755-1525

7.2 SPILLS AND RELEASES TO CONTAINMENT AREAS

Failure of tanks or piping within the GWTP building will be contained by the secondary containment; the automatic control system is designed to detect the spill and initiate a safe shutdown of the groundwater recovery wells and the GWTP. If a spill or release occurs that is contained within the containment area, the following procedure will be implemented:

1. Check the GWTP in accordance with the procedures for shutdown of the unit operations to confirm that the treatment equipment is in a safe shutdown mode.
2. Notify the Spill Response Coordinator of the failure or release.
3. Work with management and health and safety personnel as directed by the Spill Response Coordinator and other management personnel as appropriate to retain appropriate contractors to safely clean up the release and establish safe conditions for working on the failed equipment.
4. Assess the failed equipment to ascertain the nature and cause of the failure.
5. Perform health and safety planning with the Spill Response Coordinator or other management personnel as appropriate prior to initiating work.
6. Initiate work to repair the failure to re-establish safe working conditions.
7. After confirmation that engineering and management personnel concur that the cause(s) of failure have been identified and addressed, return the equipment to operation and proceed with startup of the GWTP and the groundwater recovery system.
8. Prepare a report documenting the nature and cause of the failure and the actions taken to initiate repairs and prevent recurrence of the failure.

7.3 SPILLS AND RELEASES OUTSIDE CONTAINMENT AREAS

Spills and/or releases to areas outside the secondary containment facilities constitute a threat to human health and the environment. These spills must be contained and reported to appropriate authorities as soon as possible and in accordance with the procedures below. Spills of the following materials outside of the secondary containment areas will initiate emergency shutdown and response as described below:

- Untreated groundwater that may contain arsenic at concentrations exceeding the cleanup level specified in the CAP (5 µg/L).
- Concentrated sulfuric acid used in the GWTP.
- Potassium permanganate feed solution used in the GWTP.
- Solid (granular) potassium permanganate used to make feed solution used in GWTP.
- Lime slurry used in the GWTP.

Other process chemicals are liquids that are used in small quantities (< 20 gallons) and are of low to moderate hazard to the environment.

7.3.1 Spill Discovery and Containment

Any spills extending outside the secondary containment areas within the GWTP building and/or the lime slurry delivery pad should be readily discoverable by personnel either at the Site (e.g., during delivery of lime slurry) or traveling to the Site due to alarms issued by the automatic control system (as discussed in Section 7.0). Spill containment will never take precedence over the safety of personnel. No countermeasure activities will be undertaken until conditions are safe for workers. The following general procedures should be implemented as countermeasures.

- Initiate an emergency shutdown of the GWTP using an emergency shutdown button. This will automatically notify offsite personnel of emergency conditions.
- Account for all onsite personnel and ensure they are aware of the spill and take appropriate safety precautions.
- Identify the material spilled.
- Don appropriate personal protective equipment as necessary.
- Protect surface water sources such as storm drains, swales, or wetland ditches/ponds by damming potential inlets.
- Attempt to seal or stop the source of the release **if** it can be done safely.
- Notify the Site Spill Response Coordinator as described in Section 7.3.2 for assistance in reporting, spill control and spill cleanup.

In the case of a large volume spill requiring the services of an outside contractor to contain, Site personnel will take emergency containment action and initiate additional spill response conducted by a contracted spill response service. Emergency containment actions taken by Site personnel during large spills may include the placement of containment berms at the spill location or other appropriate locations around the Building to protect surface water sources or other paths of migration offsite.

The contracted spill response service will complete the cleanup activities, pump out contained spills, and place spill cleanup materials in appropriate containers as needed for offsite disposal. All spill cleanup materials and other wastes generated from the spill response will be characterized for offsite disposal in a properly permitted facility by an appropriately licensed waste contractor.

7.3.2 Spill Reporting

The Spill Response Coordinator should be prepared to relate relevant spill information when reporting the spill to the appropriate agencies. This information will include, but is not be limited to the following:

- The address or location and phone number of the facility:
  - 1522 Fife Way East, Milton, WA, (253) 926-5841
- The date and time of the spill;
- The type of material spilled;
- Estimates of the total quantity discharged;
- The source of the discharge;
- A description of all affected media (soil, water, etc);
- The cause of the discharge;
- Any damages or injuries caused by the discharge;
- Actions being used to stop, remove, and mitigate the effects of the discharge;
- Whether an evacuation may be needed;
- The names of other individuals and/or organizations that have been contacted regarding this spill.

In the event of a spill, personnel discovering the spill shall contact the Spill Response Coordinator or the Alternate Spill Response Coordinator at the numbers listed below:

Spill Response Coordinator

Individual:	Charles Hand, MSCE, E.I.T., Process Engineer
Phone Number:	Office 206-342-1769
	Mobile 509-499-8363

The following individual has been designated as the Alternate Spill Prevention Coordinator for any Site spill response:

Alternate Spill Response Coordinator

Individual:	Larry McGaughey, Ph.D., P.E., Project Manager
Phone Number:	Office 206-342-1788
	Mobile 206-755-1525

Other names and phone numbers that may need to be contacted by the Spill Response Coordinator to report a spill are listed below:

Entity	Name	Phone Number
Fire Department/Local Emergency Planning	Fife Fire District 10	911 or 253-591-5798
Emerald Services	Licensed waste contractor	206-832-3100, 24-hour
State Emergency Response Agency	Washington State Response Center:	1-800-258-5990 or 1-800-OILS-911
County Emergency Response Agency	Pierce County Emergency Management	253-798-6595 or 911 after hours
Water Quality Control Agency	Ecology-Southwest Regional Office	360-407-6328
National Response Center Hotline	----------	1-800-424-8802

The National Response Center must be contacted in instances where spills outside of secondary containment exceed the reportable quantities (RQs) presented in the table below:

Chemical	CAS	Reportable Quantity (lbs)
Total Arsenic	7440-38-2	0.454
Potassium Permanganate	7722-64-7	45.4
Sulfuric Acid	7664-93-9 8014-95-7	454
Ammonia Still Lime Sludge from Coking	--	0.454
Ferric Chloride	7705-08-0	454
Sodium Hypochlorite	7681-52-9 10022-70-5	45.4
Sodium Bisulfite	7631-90-5	2270

8.0 Recordkeeping

Record keeping will be conducted in accordance with the most recently issued NPDES discharge permit. Electronic and/or hard copy records of all sample collection and analysis data, continuous monitoring data, calibration records, maintenance records, reports required by the Permit, and data used for the Permit application will be maintained at the GWTP Building. These records will be maintained for a minimum of three years. At the discretion of the Trust, additional copies of all records addressed in this O&M Plan may also be maintained at offsite location(s).

8.1 SAMPLE COLLECTION AND ANALYSIS DATA

The NPDES permit requires weekly grab sampling of the effluent to monitor pH and monthly composite sampling of the effluent to analyze treated water quality. The following records will be maintained regarding sample collection and analysis:

- Grab sampling forms to document sample collection and analysis using the onsite bench top pH meter.
- Composite sample collection forms documenting sample start time and date, sample stop time and date, and the name of the sampler.
- Chain-of-custody forms for all samples provided to the laboratory for analysis.
- Laboratory reports.
- For any samples analyzed for pH in the GWTP laboratory, a copy of the analytical report documenting instrument calibration and sample analysis methods.

Hard copy originals of field forms (sample collection, originator chain-of-custody copy, field pH analyses) will be maintained in the GWTP Building.

8.2 CONTINUOUS MONITORING DATA

As noted above in this O&M Plan, process instrumentation is monitored and recorded by the automated monitoring and control system whenever the GWTP is in operation. The control system records readings from several process instruments to allow analysis and control of process variables. Additionally, process data are recorded for Permit compliance purposes to monitor the quality of the treated water effluent.

The following process instrumentation is monitored and recorded for process control purposes:

- Influent Flow Transmitter FIT-100
- Oxidation Tank ORP Transmitter AIT-110

- Co-Precipitation Tank pH Transmitter AIT-120
- pH Adjust Tank Level Transmitter LIT-420
- pH Adjust Tank pH Transmitter AIT-420
- Bag Filter Differential Pressure Transmitter DPIT-420
- Cartridge Filter Differential Pressure Transmitter DPIT-430A and B
- Adsorption Column Differential Pressure Transmitter DPIT-440A and B
- Sludge Storage Tank Level Transmitter LIT-220
- $KMnO_4$ Feed Tank Level Transmitter LIT-310
- Lime Slurry Tank Level Transmitter LIT-320
- Polymer Feed Tank Level Transmitter LIT-330 & LIT 330B
- Effluent pH Transmitter AIT-450

Data recorded from the above instruments are automatically stored in the process control database. Data from these instruments are copied to a database for process data and maintained as an electronic data file in the GWTP computer on a monthly basis no later than the 15th day of the month following data collection. These data will be simultaneously copied to a backup storage drive maintained at the GWTP Building. The electronic data files will be maintained for a minimum of three years.

8.3 CALIBRATION AND MAINTENANCE RECORDS

Written records will be prepared for calibration of process and laboratory instrumentation. These hard copy records will be maintained at the GWTP Building. Calibration records for equipment used to measure Permit parameters will also be scanned and stored electronically on the GWTP computer and on a backup storage drive maintained offsite. These records will be maintained for at least three years.

Written records confirming maintenance activities will be prepared and maintained at the GWTP Building. These records will document routine, preventive maintenance and also non-routine maintenance. Maintenance records will be placed in the equipment files that are maintained onsite for each piece of equipment. Maintenance records for all GWTP equipment will be maintained at the GWTP Building for a minimum of three years. If a piece of equipment is replaced with less than three years of use, equipment and maintenance files will be placed in an archive folder and kept onsite for a minimum of three years.

8.4 REPORTS

Several reports are required for compliance with the Permit. These include monthly DMRs, noncompliance reporting, and the other plans and reports, as specified in the Permit provisions.

Reports and plans prepared for compliance with the Permit will be maintained at the GWTP Building in hard copy and electronic format. These reports and plans will be maintained for a minimum of three years from the date the plan or report was prepared.

8.5 PERMIT APPLICATION DATA

A complete hard copy and electronic copy of the application for the Permit will be maintained at the GWTP Building for a minimum of three years. The application will be kept at the GWTP Building for as long as the Permit is effective. Future applications for permit renewal will also be maintained in the same manner at the GWTP Building.

Tables

FLOYD | SNIDER

amec foster wheeler

TABLE 1
Groundwater Quality Basis
B&L Woodwaste Site

Parameter	Units	PZ-1B	PZ-2B	PZ-3B	PZ-4B	PZ-4C	PZ-5B	PZ-6B	PZ-7B	PZ-8B	PZ-8C	PZ-10	PZ-11		PZ-13	PD-109	PZ-9	PZ-12	PD-107		Minimum	Maximum	Average[1]
													Apr-10	Jun-10					Apr-10	Jun-10			
Anions																							
Chloride	mg/L	----	----	----	5.7	----	----	----	----	7.8	----	----	----	----	----	17.2	20.6	60.3	11.3	----	5.7	60.3	20.5
Bromide	mg/L	----	----	----	0.1 U	----	----	----	----	0.1 U	----	----	----	----	----	0.9	0.1	1	0.1 U	----	ND	1	0.7
Nitrogen as Nitrate	mg-N/L	----	----	----	0.1 U	----	----	----	----	0.1 U	----	----	----	----	----	0.1 U	0.1 U	0.1	0.2	----	ND	0.2	--
Nitrogen as Nitrite	mg-N/L	----	----	----	0.1 U	----	----	----	----	0.1 U	----	----	----	----	----	0.1 U	0.1 U	0.1 U	1 U	----	ND	ND	--
Ortho-phosphorus	mg/L	----	----	----	0.1 U	----	----	----	----	0.3	----	----	----	----	----	0.1 U	0.1 U	0.1 U	0.1 U	----	ND	0.3	--
Sulfate	mg/L	----	----	----	2.4	----	----	----	----	3.1	----	----	----	----	----	0.1 U	0.1 U	0.4	0.1 U	----	ND	3.1	2.0
Fluoride	mg/L	----	----	----	0.3	----	----	----	----	0.3	----	----	----	----	----	1.0 U	0.1 U	1 U	1.6	----	ND	1.6	0.7
Total Metals																							
Antimony	µg/L	----	----	----	50 U	----	----	----	----	50 U	----	----	----	----	----	50 U	50 U	50 U	50 U	----	ND	ND	--
Arsenic	µg/L	1,610	172	1,130	2.0	1.2	262	9.7	78.9	18.1	13.7	1,860	1,880	1,630	273	190	1,920	1,550	4,150	4,540	1.2	4,540	1,121
Barium	µg/L	----	----	----	28	----	----	----	----	25	----	----	----	----	----	168	128	80	146	----	25	168	96
Beryllium	µg/L	----	----	----	1 U	----	----	----	----	1 U	----	----	----	----	----	1 U	1 U	1 U	1 U	----	ND	ND	--
Cadmium	µg/L	----	----		2 U	----		----	----	2 U	----	----	----	----	----	2 U	2 U	2 U	2 U	----	ND	ND	--
Calcium	µg/L	74,500	102,000	109,000	----	15,800	18,600	85,500	75,100	----	14,600	119,000	96,400	79,100	139,000	----	----	----	----	139,000	14,600	139,000	82,100
Chromium	µg/L	----	----	----	5 U	----	----	----	----	7	----	----	----	----	----	5 U	5 U	5 U	5 U	----	ND	7	--
Copper	µg/L	0.8	1.1	1.0	2 U	0.5 U	1.1	0.9	0.7	5	0.7	1.4	0.7		47.0	2 U	7	5	10	----	ND	47	6.3
Iron	µg/L	88,500	58,600	60,600	8,550	7,590	2,060	22,000	21,500	2,720	130	62,300	44,700	71,900	55,000	69,600	77,900	24,400	48,300	56,200	130	88,500	41,200
Lead	µg/L	1 U	1 U	1 U	1 U	1 U	1 U	1 U	1 U	1 U	1 U	1 U	1 U		12	1 U	3	1	7	----	ND	12	5.8
Magnesium	µg/L	49,400	54,900	58,100	----	8,720	9,630	51,300	39,700	----	15,700	108,000	70,500	38,000	47,900	----	----	----	----	104,000	8,720	108,000	50,500
Manganese	µg/L	2,610	5,740	5,470	271	307	1,310	4,550	4,350	879	188	2,680	2,900		4,100	2,160	4,060	4,380	3,260	3,460	188	5,740	2,926
Mercury	µg/L	----	----	----	0.1 U	----	----	----	----	0.1 U	----	----	----	----	----	0.1 U	0.1 U	0.1 U	0.1 U	----	ND	ND	--
Nickel	µg/L	----	----	----	10 U	----	----	----	----	10	----	----	----	----	----	10	10 U	20	30	----	ND	30	18
Selenium	µg/L	----	----	----	0.5 U	----	----	----	----	0.5 U	----	----	----	----	----	2 U	2 U	2 U	2 U	----	ND	ND	--
Silver	µg/L	----	----	----	3 U	----	----	----	----	3 U	----	----	----	----	----	3 U	3 U	3 U	3 U	----	ND	ND	--
Thallium	µg/L	----	----	----	0.2 U	----	----	----	----	0.2 U	----	----	----	----	----	0.2 U	0.2 U	0.2 U	0.2 U	----	ND	ND	--
Zinc	µg/L	4 U	15	5	10 U	4 U	4 U	4 U	4 U	10 U	4 U	4 U	4 U	----	59	10 U	20	20	80	----	ND	80	33
Dissolved Metals																							
Antimony	µg/L	----	----	----	50 U	----	----	----	----	50 U	----	----	----	----	----	50 U	50 U	50 U	50 U	----	ND	ND	--
Arsenic	µg/L	----	----	----	2.2	----	----	----	----	16.8	----	----	----	----	----	190	1,710	1,360	4,260	----	2.2	4,260	1,260
Dissolved Arsenic Speciation																							
Arsenic III	µg/L	----	----	----	1.54	----	----	----	----	11.7	----	----	----	----	----	146	1,460	662	2,960	----	1.54	2,960	874
Arsenic V	µg/L	----	----	----	0.71	----	----	----	----	4.33	----	----	----	----	----	60	777	884	1,750	----	0.71	1,750	579
Dimethylarsinic acid/DMAs	µg/L	----	----	----	0.35 U	----	----	----	----	0.35 U	----	----	----	----	----	6.9 U	6.9 U	6.9 U	6.9 U	----	ND	ND	--
Monomethylarsonic acid/MMAs	µg/L	----	----	----	0.35 U	----	----	----	----	0.35 U	----	----	----	----	----	6.9 U	6.9 U	6.9 U	6.9 U	----	ND	ND	--
Barium	µg/L	----	----	----	24	----	----	----	----	9	----	----	----	----	----	164	109	72	129	----	9	164	85
Beryllium	µg/L	----	----	----	1 U	----	----	----	----	1 U	----	----	----	----	----	1 U	1 U	1 U	1 U	----	ND	ND	--
Cadmium	µg/L	----	----	----	2 U	----	----	----	----	2 U	----	----	----	----	----	2 U	2 U	2 U	2 U	----	ND	ND	--
Calcium	µg/L	----	----	----	17,600	----	----	----	----	14,200	----	----	----	----	----	59,000	116,000	69,100	130,000	----	14,200	130,000	67,700
Chromium	µg/L	----	----	----	5 U	----	----	----	----	5 U	----	----	----	----	----	5 U	5 U	5 U	5 U	----	ND	ND	--
Copper	µg/L	----	----	----	2 U	----	----	----	----	2 U	----	----	----	----	----	2 U	2 U	2 U	2 U	----	ND	ND	--
Iron	µg/L	----	----	----	7,990	----	----	----	----	530	----	----	----	----	----	69,500	76,100	23,000	46,700	----	530	76,100	37,300
Lead	µg/L	----	----	----	1 U	----	----	----	----	1 U	----	----	----	----	----	1 U	1 U	1 U	1 U	----	ND	ND	--
Magnesium	µg/L	----	----	----	9,300	----	----	----	----	13,000	----	----	----	----	----	39,600	66,100	41,600	103,000	----	9,300	103,000	45,400
Manganese	µg/L	----	----	----	271	----	----	----	----	850	----	----	----	----	----	2,160	3,950	4,480	3,320	----	271	4,480	2,510
Mercury	µg/L	----	----	----	0.1 U	----	----	----	----	0.1 U	----	----	----	----	----	0.1 U	0.1 U	0.1 U	0.1 U	----	ND	ND	--
Nickel	µg/L	----	----	----	10 U	----	----	----	----	10 U	----	----	----	----	----	10 U	10 U	20	20	----	ND	20	20
Potassium	µg/L	----	----	----	4,680	----	----	----	----	3,280	----	----	----	----	----	6,360	12,200	11,900	20,600	----	3,280	20,600	9,800
Selenium	µg/L	----	----	----	0.5 U	----	----	----	----	0.5 U	----	----	----	----	----	2 U	2 U	2 U	2 U	----	ND	ND	--
Silicon	µg/L	----	----	----	21,100	----	----	----	----	19,700	----	----	----	----	----	28,000	30,600	24,200	37,500	----	19,700	37,500	26,900
Silver	µg/L	----	----	----	3 U	----	----	----	----	3 U	----	----	----	----	----	3 U	3 U	3 U	3 U	----	ND	ND	--
Sodium	µg/L	----	----	----	21,400	----	----	----	----	19,500	----	----	----	----	----	29,300	68,000	86,300	37,500	----	19,500	86,300	43,700
Thallium	µg/L	----	----	----	0.2 U	----	----	----	----	0.2 U	----	----	----	----	----	0.2 U	0.2 U	0.2 U	0.2 U	----	ND	ND	--
Zinc	µg/L	----	----	----	10 U	----	----	----	----	10 U	----	----	----	----	----	10 U	10 U	10	40	----	ND	40	--
Phenols		----	----	----		----	----	----	----		----	----	----	----	----					----			
Phenol	µg/L	----	----	----	----	----	----	----	----	----	----	----	----	----	----	1 U	1 U	1 U	1 U	----	ND	ND	--
2-Methylphenol	µg/L	----	----	----	----	----	----	----	----	----	----	----	----	----	----	1 U	1 U	1 U	1 U	----	ND	ND	--
4-Methylphenol	µg/L	----	----	----	----	----	----	----	----	----	----	----	----	----	----	1 U	42	360	1 U	----	ND	360	201
2,4-Dimethylphenol	µg/L	----	----	----	----	----	----	----	----	----	----	----	----	----	----	1 U	1.8	1 U	1 U	----	ND	1.8	--
General Chemistry		----	----	----		----	----	----	----		----	----	----	----	----	----	----	----	----	----			
Total Alkalinity	mg/L	545	627	688	135	129	157	538	525	138	144	923	660	470	567	464	812	499	875	867	129	923	514
Bicarbonate Alkalinity	mg/L	545	627	688	135	129	157	538	525	138	144	923	660	470	567	464	812	499	875	867	129	923	514
Carbonate Alkalinity	mg/L	1 U	1 U	1 U	1 U	1 U	1 U	1 U	1 U	1 U	1 U	1 U	1 U	1 U	1 U	1 U	1 U	1 U	1 U	1 U	ND	ND	--
Hydroxide Alkalinity	mg/L	1 U	1 U	1 U	1 U	1 U	1 U	1 U	1 U	1 U	1 U	1 U	1 U	1 U	1 U	1 U	1 U	1 U	1 U	1 U	ND	ND	--
Sulfide	mg/L	----	----	----	0.05 U	----	----	----	----	0.05 U	----	----	----	----	----	0.05 U	0.05 U	0.05 U	0.05 U	----	ND	ND	--
5-Day Biochemical Oxygen Demand (BOD_5)	mg/L	----	----	----	----	----	----	----	----	----	----	----	----	----	----	14.9	18.4	9.5	18.0	----	9.5	18.4	15.2
Total Organic Carbon (TOC)	mg/L	----	----	----	4.27	----	----	----	----	1.70	----	----	----	40.2	----	24	57.6	42.8	36.4	50.8	1.7	57.6	32.2
Dissolved Organic Carbon (DOC)	mg/L	----	----	----	----	----	----	----	----	----	----	----	----	----	----	23.4	56.8	46.8	36	----	23.4	56.8	40.8
pH	pH units	----	----	----	6.66	----	----	----	----	7.13	----	----	----	----	----	6.51	6.46	6.42	6.44	----	6.42	7.13	6.6
Total dissolved solids (TDS)	mg/L	549	925	737	206	164	228	630	553	201	163	937	649	----	633	532	909	686	889	----	163	937	564
Field Parameters																							
pH	pH units	6.29	6.1	6.23	7.01	6.82	5.7	6.14	6.1	7.28	7.0	6.09	6.25	----	6.04	6.52	6.12	6.27	5.97	----	5.7	7.28	6.3
Specific Conductivity	mS/cm	1.2	1.38	1.5	0.305	0.260	0.364	1.3	1.15	0.280	0.297	1.599	1.177	----	1.328	1.040	1.778	1.044	1.494	----	0.26	1.778	1.0
Temperature	°C	12.6	12	12.3	11.5	12.28	11.9	11.7	11.6	11.4	12.1	13	12.95	----	12.86	11.8	13.0	12.7	12.7	----	11.4	13	12.3
Oxidation-reduction potential (ORP)	mV	-114	-28	-101	-129	-151	28	-69	-17	-53	26	-145.7	-160	----	-110	-130	-232	-92	-106	----	-232	28	-93.2

Notes

Except where noted, all samples were collected in April, 2010. Refer to the Engineering Alternatives Evaluation, Appendix A, Treatability Study Report, for additional information.

U Result was below laboratory reporting limit.

1 The average concentrations are based only on results that were greater than the laboratory reporting limits. The average was not calculated unless there were at least 2 detected results.

FLOYD | SNIDER

amec foster wheeler

TABLE 2
Equipment and Chemical Contact Information
B&L Woodwaste Site

Company	Contact	Phone Numbers: Office	Phone Numbers: Cell	E-mail	Notes
ABB/ Autoline controls	Jeff Ecklund	425.787.8855		Jeffe@AutolineNet.com	pH/ORP probes and transmitters
ABB/ R&T Factors	Tim Taylor	503.287.6114		tim@rtfactors.com	Probes and transmitters, Primary Contact
ARI labs	kelly Bottom	206.695.6220	or 6221		NPDES samples, permanganate and arsenic standard solutions
Assoc. Petro. Products		253.627.6179			Majority of lubricants for the GWTP
Axens N.A.	Bill Reid	630.527.1213	630.527.1229	Breid@axenscanada.com	Activated Alumnia
Calhoun&DeJong	Chelsea Weitzel	503.288.5091		Chelsea@cdisales.com	Sales for filters and filter bags
	Bryan Drysdale	503.288.5091	503.709.6533	bryand@cdisales.com	Technical support for filters and filter bags
Cascade Columbia	Kevin Rock	206-282-6334	206-255-7299	kevinr@cascadecolumbia.com	Permanganate, ferric chloride (coagulant), sulfuric acid, acetic acid, sodium hypochlorite
Cole Parmer					Lab supplies User: frorie@geosytec.com, PW: hugs311
Delta Industries	Dave Foteff	503.288.5011		dave.foteff@deltaindustriesinc.com	Polymer (moyno pumps)
Emerson/Rosemount	Frank Spevak	206.979.1953		Frank.Spevak@Emerson.com	Effluent pH meter and probe
Evoqua	Alex Peru	360.699.7392		alex.peru@siemens.com	Activated Alumnia
Fastenal	John Vencill	253.474.1383	360.350.2527	jvencill@fastenal.com	Industrial supply (double diaphragm pumps)
Floyd&Snider	Terry Duncan	206.292.2078		Terry.Duncan@floydsnider.com	Supply ordering
Fluid Process ENG	Richard Styles	425.868.0899		sales@fluidprocessengineering.com	Watson Marlow pumps, peristalic hoses, hose lube for lime system
Gilmour & Co	Mark Gilmour	435.649.1208	253-279-0080	mgilmour@harbornet.com	Lime Slurry
Grainger		253.922.2268			Industrial supply
Hach					Lab testing supplies. User: frorie@geosytec.com, PW: trudat311
McMaster Carr		330.995.5500		la.sales@mcmaster.com	Industrial supply for piping, fittings, flow meters, etc.
Micronics	Robert Parks	603.433.1299	603.498.5679	rob.parks@micronicsinc.com	Filter press, primary contact
	Ryan Nickerson	603.433.1299	ext. 3037	ryan.nickerson@micronicsinc.com	Filter press
Motion Industies		253.572.7070			Industrial supply
Nalco	Wes Henson		360 628 3639	wlhenson@nalco.com	Polymer and Coag
Northwest Pumps	Larry Swanson	253.850.7867		larry.swanson@nwpump.com	
NRC	Keith Gehring	206.607.3056	206.316.7106	kgehring@nrcc.com	Media change out, waste disposal, tank and sump service, Hazardous and Non Haz spill response
Paramount Supply	Ky Mazzuca	253.383.3111	253.224.1708	kymazzuca@paramountsupply.com	Pipe, valves, fittings for steel and sch 80 pvc. We have a charge account and wholesale discount.
Pierce Co. Fire	Mark Carman	253.798.7184	253.377.4563	mcarman@co.pierce.wa.us	Regulatory Fire Marshal/ Fire Prevention Bureau
Preferred Pump	Dan Wygal	253.548.1252		dwygal@preferredpump.com	Grundfos controllers and well pumps
R&R compressor	Glenn Porter	425.827.0710	425.864.8470	RRCS2010@aol.com	Kaeser Air Compressor parts and maintenance
Specialty Metals	Nick Hallock	253.398.1678		nick@smcmetal.net	Metal fabrication
Spooner Contracting	Bill Spooner		253.347.3321	bill@spoonercontracting.com	Contractor for major repairs and upgrades, field/landfill maintenance
Systems Interface	Paul Osentowski	425.481.1225	ext. 245	PMO@Systems-Interface.com	PLC programming/IT support
Tacoma Elec Supply	Dan Bern	253.475.0540	253.284.0139	dbern@tacomaelectric.com	Electrical Supply
Timco	Bill Shoopman	253.272.0397			Industrial hose and fitting, industrial supply. We have a charge account and wholesale discount.

Drawings

GROUNDWATER RECOVERY AND TREATMENT SYSTEM
OPERATION & MAINTENANCE MANUAL

B&L WOODWASTE SITE
PIERCE COUNTY, WASHINGTON

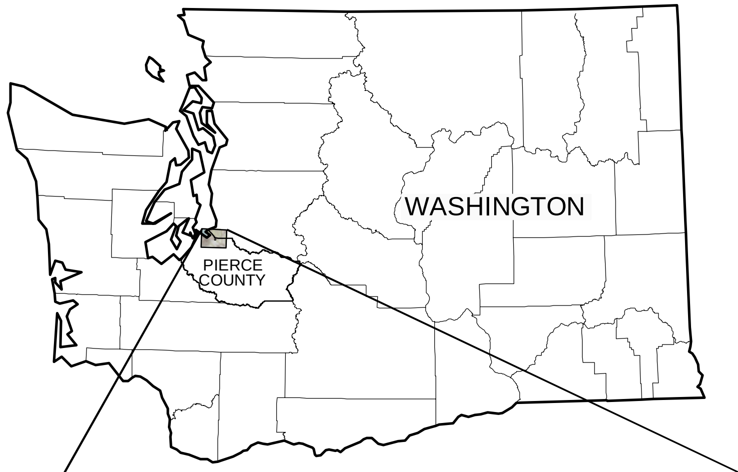

LOCATION MAP

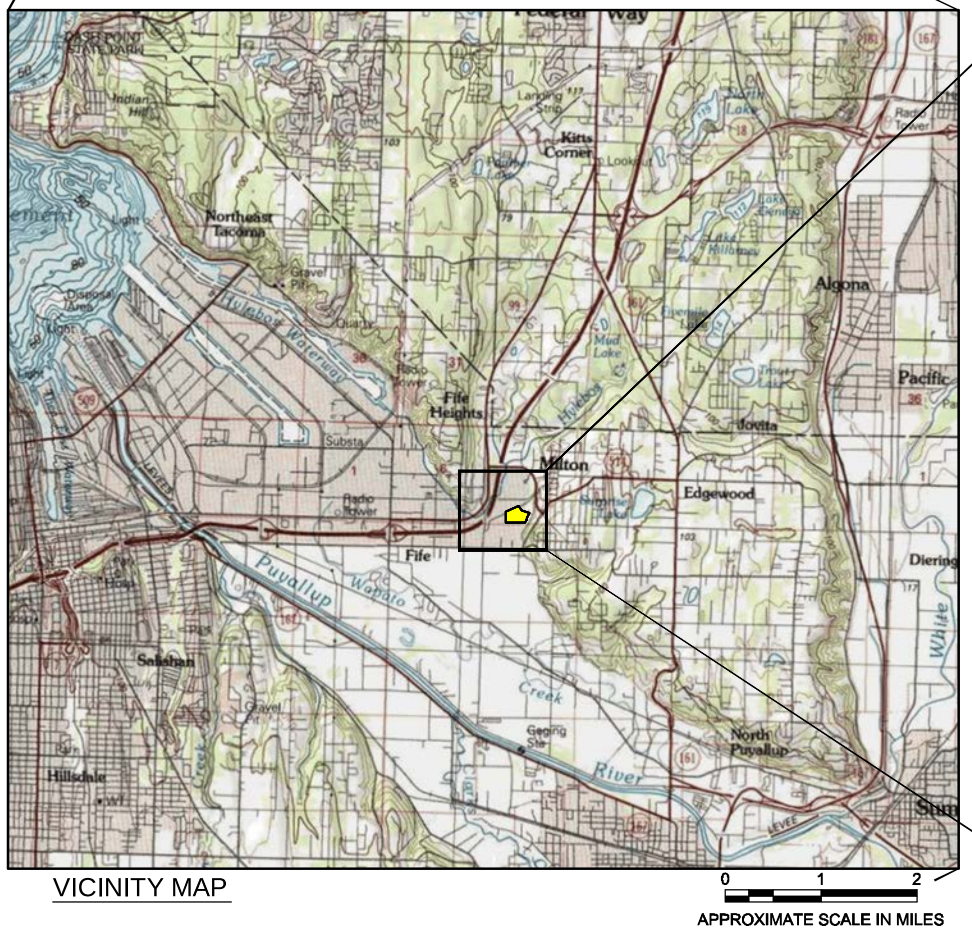

VICINITY MAP

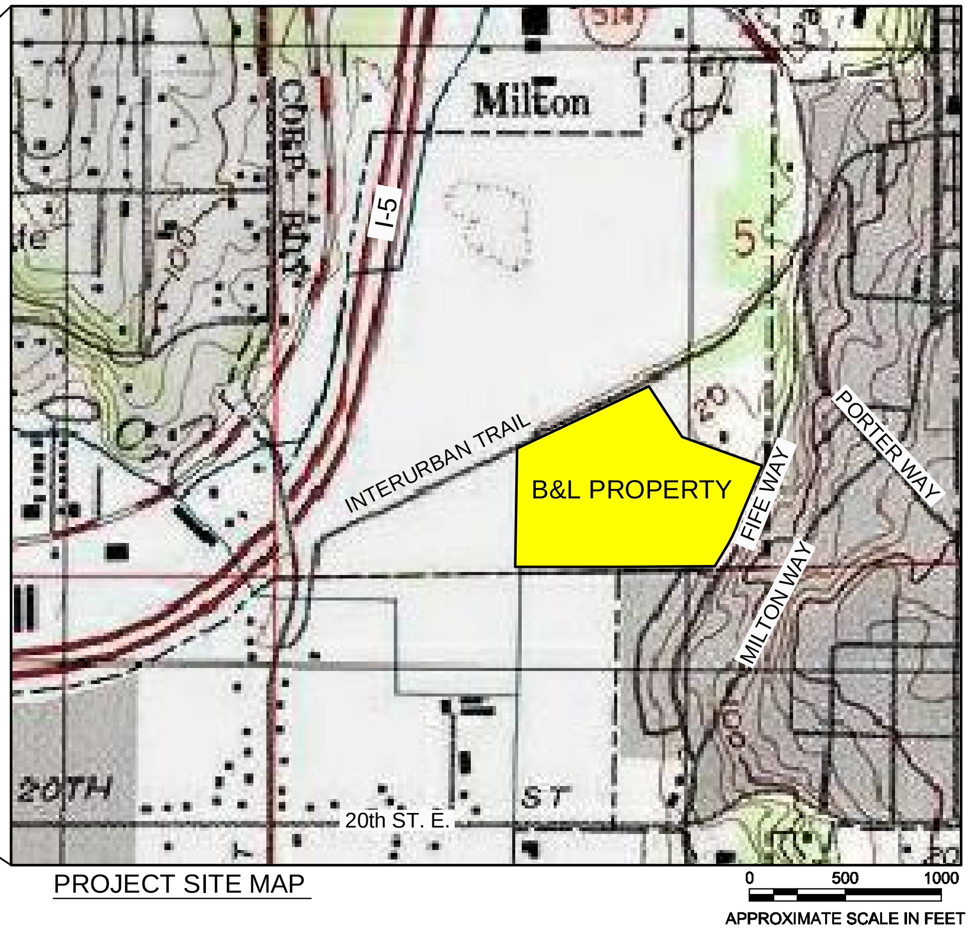

PROJECT SITE MAP

DRAWING LIST

G-1	COVER SHEET
C-03	GROUNDWATER TREATMENT PLANT PARTIAL SITE PLAN
C-04	GROUNDWATER RECOVERY AND TREATMENT PLANT PIPING LAYOUT
M-01	GROUNDWATER TREATMENT PLANT MECHANICAL LAYOUT FLOOR PLAN
M-02	GROUNDWATER TREATMENT PLANT MECHANICAL LAYOUT MEZZANINE PLAN
M-03	GROUNDWATER TREATMENT PLANT MECHANICAL LAYOUT SECTION-A
M-04	GROUNDWATER TREATMENT PLANT MECHANICAL LAYOUT SECTION-B
P&ID-00	PROCESS FLOW AND INSTRUMENTATION LEGEND
PFD-01	PROCESS FLOW DIAGRAM
P&ID-01	PROCESS FLOW AND INSTRUMENTATION OXIDATION / PRECIPITATION
P&ID-02	PROCESS FLOW AND INSTRUMENTATION SLUDGE HANDLING
P&ID-03	PROCESS FLOW AND INSTRUMENTATION ADDITIVES
P&ID-04	PROCESS FLOW AND INSTRUMENTATION EFFLUENT POLISHING
P&ID-05	PROCESS FLOW AND INSTRUMENTATION EXTRACTION AND MONITORING WELLS

Plot Date: 10/22/15 - 12:21pm, Plotted by: adam.stenberg
Drawing Path: S:\13488\009_AsBuilt\CAD\, Drawing Name: SE10160010-cover_102215.dwg

REFERENCES:
PLANS

DATUM
HORIZONTAL: WASP–NAD83–S FEET
VERTICAL: NAVD88 FEET

NO.	REVISION	DATE	APRVD

DRAWN APS
DESIGNED –
CHECKED CDH
REVIEWED LMM

FLOYD | SNIDER
amec foster wheeler

COVER SHEET
OPERATION & MAINTENANCE MANUAL

B&L WOODWASTE SITE
PIERCE COUNTY, WASHINGTON

DATE: 10/22/15
PROJECT NO.: SE10160010

DRAWING
G–01

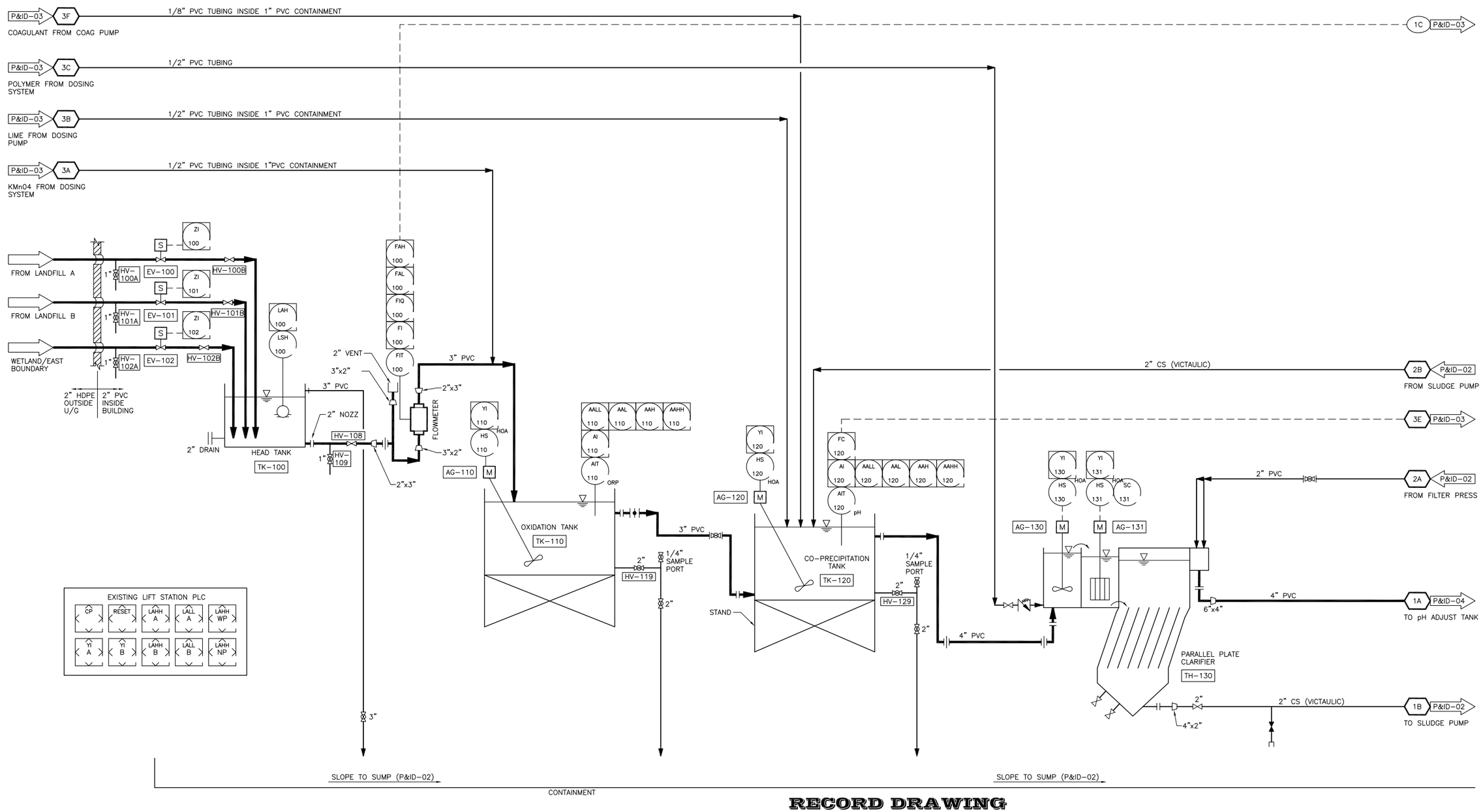

RECORD DRAWING

REFERENCES:
PLANS

DATUM
HORIZONTAL:
WASP-NAD83-S FEET
VERTICAL: NAVD88 FEET

NO.	REVISION	DATE	APRVD
4	ISSUED FOR TENDER	MAY 26	LDV
5	ISSUED FOR CONSTRUCTION	JLY 26	LDV
6	CONTROL CHANGES	DEC 20	
7	CONTROL CHANGES (2)	JAN 10	BE
8	AS-BUILT	DEC 7	BE

DRAWN JR
DESIGNED LDV
CHECKED GP
REVIEWED WJM/LMM

amec foster wheeler

Amec Foster Wheeler
Environment & Infrastructure, Inc.
600 University Street, Suite 600
Seattle, Washington 98101

PROCESS FLOW AND INSTRUMENTATION
OXIDATION / PRECIPITATION

B&L WOODWASTE SITE
PIERCE COUNTY, WASHINGTON

DATE: 10/23/15
PROJECT NO.: SE10160010

DRAWING
P&ID-01

Plot Date: 10/23/15 - 9:44am, Plotted by: adam.stenberg
Drawing Path: S:\13488\009_AsBuilt\CAD\, Drawing Name: SE10160010-PIDs_APS_102215.dwg

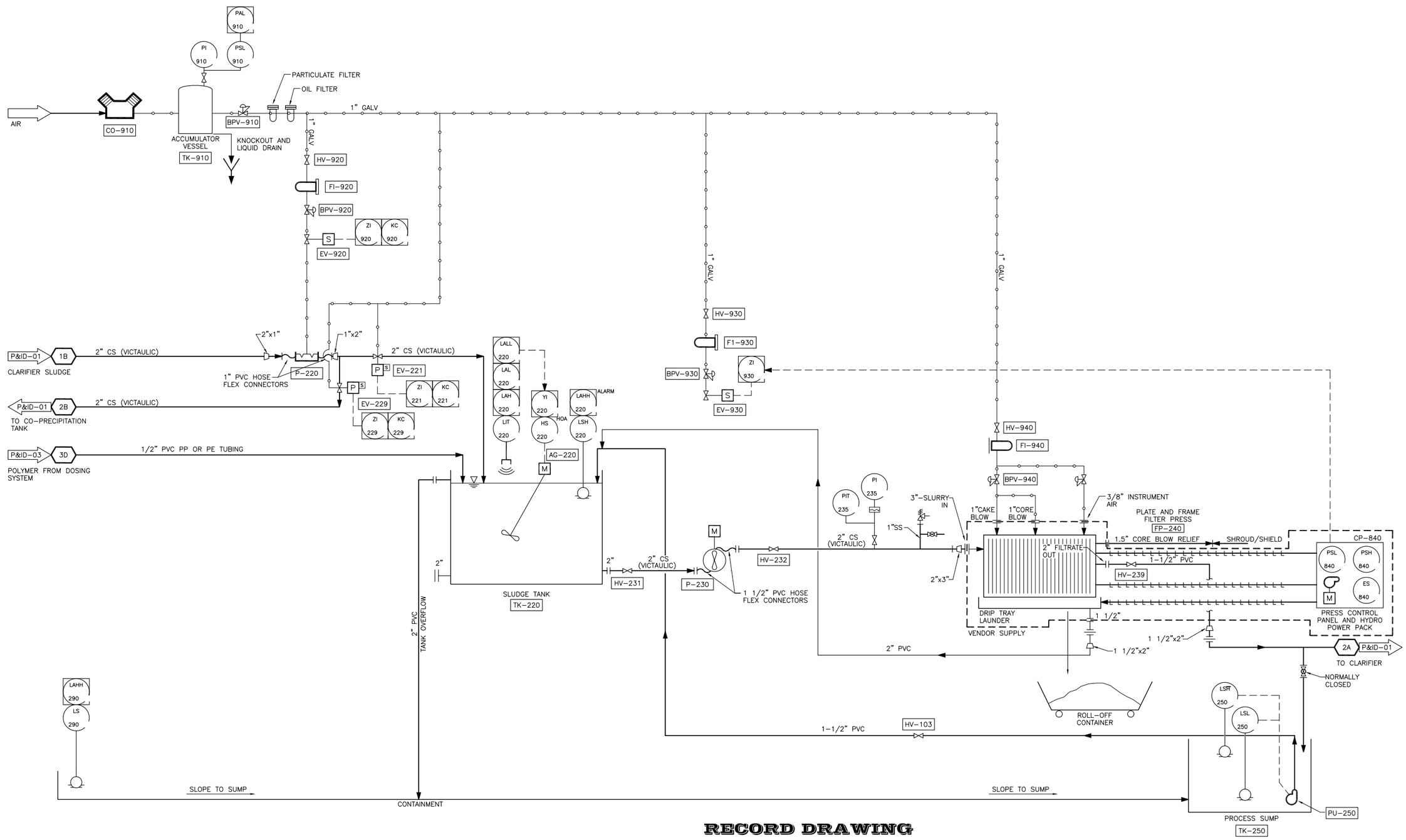

RECORD DRAWING

REFERENCES:
PLANS

DATUM
HORIZONTAL:
WASP-NAD83-S FEET
VERTICAL: NAVD88 FEET

NO.	REVISION	DATE	APRVD
4	ISSUED FOR TENDER	MAY 26	LDV
5	ISSUED FOR CONSTRUCTION	JLY 26	LDV
6	CONTROL CHANGES	DEC 20	
7	CONTROL CHANGES (2)	JAN 10	BE
8	AS-BUILT	DEC 7	BE

DRAWN JR
DESIGNED LDV
CHECKED GP
REVIEWED WJM/LMM

amec foster wheeler

Amec Foster Wheeler
Environment & Infrastructure, Inc.
600 University Street, Suite 600
Seattle, Washington 98101

PROCESS FLOW AND INSTRUMENTATION
SLUDGE HANDLING

B&L WOODWASTE SITE
PIERCE COUNTY, WASHINGTON

DATE: 10/23/15
PROJECT NO.: SE10160010

DRAWING
P&ID-02

Plot Date: 10/23/15 - 9:47am, Plotted by: adam.stenberg
Drawing Path: S:\134880\009_AsBuilt\CAD\, Drawing Name: SE10160010-PIDs_APS_102215.dwg

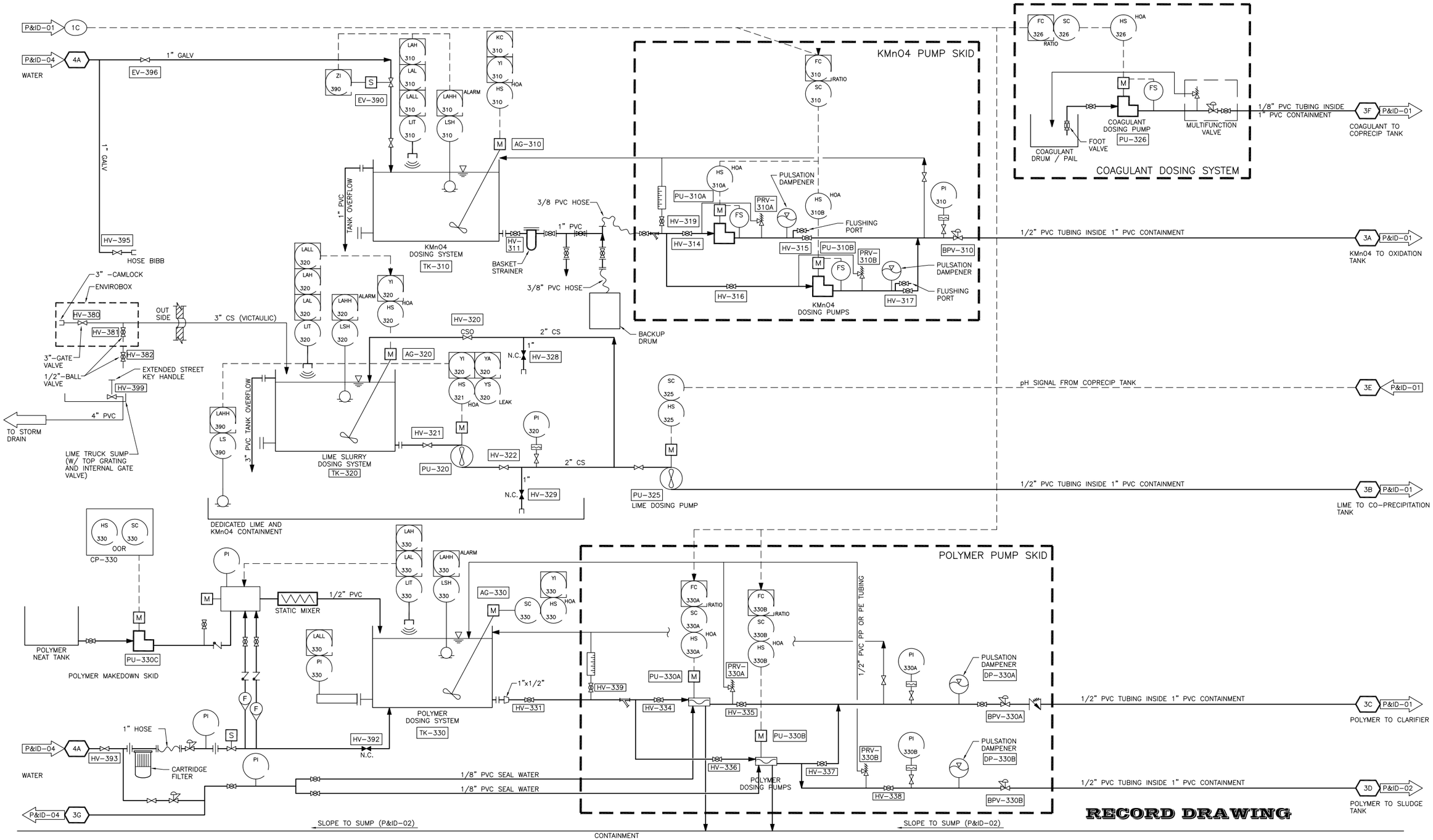

REFERENCES:
PLANS

DATUM
HORIZONTAL: WASP-NAD83-S FEET
VERTICAL: NAVD88 FEET

NO.	REVISION	DATE	APRVD
4	ISSUED FOR TENDER	MAY 26	LDV
5	ISSUED FOR CONSTRUCTION	JLY 26	LDV
6	CONTROL CHANGES	DEC 20	
7	CONTROL CHANGES (2)	JAN 10	BE
8	AS-BUILT	DEC 7	BE

DRAWN JR
DESIGNED LDV
CHECKED GP
REVIEWED WJM/LMM

amec foster wheeler

Amec Foster Wheeler Environment & Infrastructure, Inc.
600 University Street, Suite 600
Seattle, Washington 98101

PROCESS FLOW AND INSTRUMENTATION
ADDITIVES

B&L WOODWASTE SITE
PIERCE COUNTY, WASHINGTON

DATE: 10/23/15
PROJECT NO.: SE10160010

DRAWING
P&ID-03

Plot Date: 10/23/15 - 10:17am, Plotted by: adam.stenberg
Drawing Path: S:\13488\009_AsBuiltCAD\, Drawing Name: SE10160010-PIDs_APS_102215.dwg

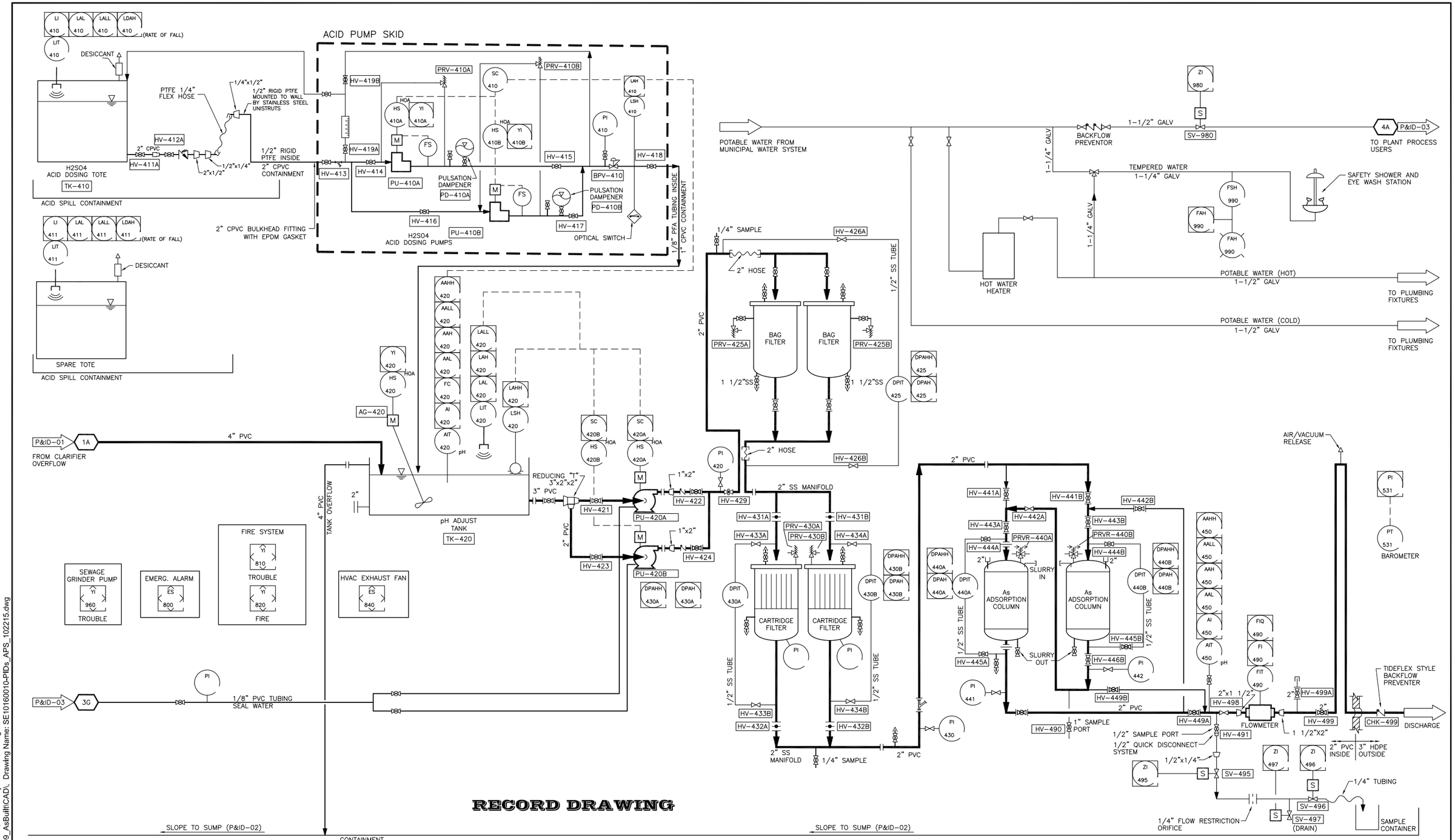

REFERENCES:	NO.	REVISION	DATE	APRVD
PLANS	5	ISSUED FOR CONSTRUCTION	JLY 26	LDV
	6	MATERIAL CHANGE	SEPT 8	LMM
DATUM HORIZONTAL: WASP-NAD83-S FEET VERTICAL: NAVD88 FEET	7	CONTROL CHANGES	DEC 20	
	8	CONTROL CHANGES (2)	JAN 10	BE
	9	AS-BUILT	DEC 7	BE

DRAWN JR
DESIGNED LDV
CHECKED GP
REVIEWED WJM/LMM

amec foster wheeler

Amec Foster Wheeler Environment & Infrastructure, Inc.
600 University Street, Suite 600
Seattle, Washington 98101

PROCESS FLOW AND INSTRUMENTATION
EFFLUENT POLISHING

B&L WOODWASTE SITE
PIERCE COUNTY, WASHINGTON

DATE: 10/23/15
PROJECT NO.: SE10160010

DRAWING P&ID-04

Plot Date: 10/23/15 - 10:17am, Plotted by: adam.stenberg
Drawing Path: S:\134880\009_AsBuilt\CAD\, Drawing Name: SE10160010-PIDs_APS_102215.dwg

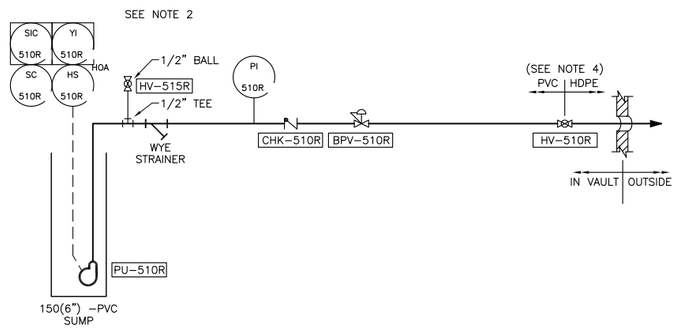

LANDFILL WELLS DETAIL (TYP OF 11)

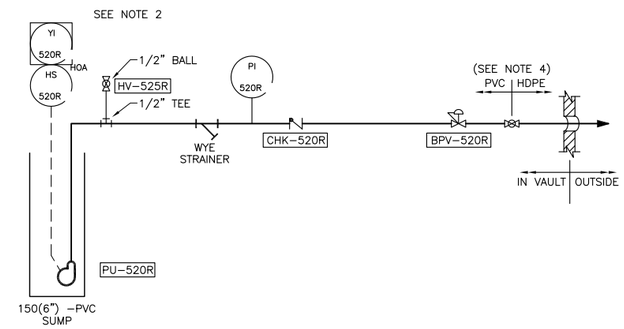

AG. FIELD AND WETLAND WELLS DETAIL (TYP OF 10)

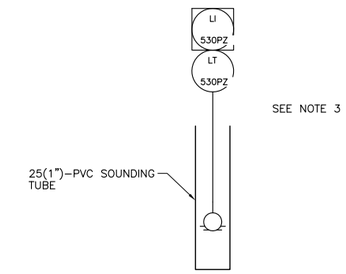

PIEZOMETER DETAIL (TYP OF 16)

STATION	COORDS	TERMINATION
R-01	1186310.409 702291.5027 inside	KIOSK 3
R-02	1186467.023 702042.2185 inside	KIOSK 2
R-03	1186327.49 702003.56 inside	KIOSK 2
R-04	1186152.52 702096.41 inside	KIOSK 3
R-05	1186200.63 701953.59 inside	KIOSK 2
R-06	1186293.15 701769.26 inside	KIOSK 2
R-07	1185852.906 701693.703 inside	KIOSK 1
R-08	1185907.93 701803.16 inside	KIOSK 1
R-09	1185776.662 701873.0772 inside	KIOSK 1
R-10	1185842.089 702081.232 inside	KIOSK 1
R-11	1186121.23 702223.96 inside	KIOSK 3

TABLE OF LANDFILL WELLS

STATION	COORDS	TERMINATION
R-12	1186517.737 702182.2116 outside-east	KIOSK 4
R-13	1186579.559 702070.3399 outside-east	KIOSK 4
R-14	1185679.036 702073.3376 outside-west	KIOSK 5
R-15	1185617.392 702077.515 outside-west	KIOSK 5
R-16	1186011.284 702345.452 outside-north	KIOSK 5
R-17	1186126.763 702394.4934 outside-north	KIOSK 5
R-18	1186032.526 702468.6627 outside-north	KIOSK 5
R-19	1185911.289 702509.2755 outside-north	KIOSK 5
R-20	1185980.764 702595.2624 outside-north	KIOSK 5
R-21	1185984.041 702673.8679 outside-north	KIOSK 5

TABLE OF AG. FIELD AND WETLAND WELLS

STATION	COORDS	TERMINATION
PZ-1a	1186183.28 702353.14 perimeter	KIOSK 3
PZ-1b	1186191.53 702329.08 perimeter	KIOSK 3
PZ-2a	1185886.44 702209.88 perimeter	KIOSK 1
PZ-2b	1185897.84 702186.89 perimeter	KIOSK 1
PZ-3a	1185733.73 701976.73 perimeter	KIOSK 1
PZ-3b	1185753.71 701976.05 perimeter	KIOSK 1
PZ-4a	1185731.96 701728.73 perimeter	KIOSK 1
PZ-4b	1185755.21 701726.18 perimeter	KIOSK 1
PZ-4c	1185754.96 701732.98 perimeter	KIOSK 1
PZ-5a	1186002.81 701621.79 perimeter	KIOSK 1
PZ-5b	1186005.46 701641.88 perimeter	KIOSK 1
PZ-5c	1186000.96 701642.36 perimeter	KIOSK 1
PZ-6a	1186379.5 701620.95 perimeter	DIRECT
PZ-6b	1186377.84 701640.57 perimeter	DIRECT
PZ-7a	1186595.69 701831.05 perimeter	DIRECT
PZ-7b	1186578.05 701835.09 perimeter	DIRECT
PZ-8a	1186513.106 702097.0787 perimeter	KIOSK 4
PZ-8b	1186495.24 702090.37 perimeter	KIOSK 4
PZ-8c	1186496.75 702085.74 perimeter	KIOSK 4

TABLE OF PIEZOMETERS

NOTES:

1. WELL COORDINATES EXPRESSED IN WASHINGTON STATE PLANE COORDINATE SYSTEM. DATUM CITATION IN LOWER LEFT.
2. "R" = STATION NUMBER FOR EACH WELL
3. "PZ" = STATION NUMBER FOR EACH PIEZOMETER
4. INSIDE VAULT USE SCH 80 PVC, OUTSIDE VAULT USE SDR11 HDPE R2, R7, R9 ARE 1.5", ALL OTHERS ARE 1"

RECORD DRAWING

REFERENCES:
PLANS

DATUM
HORIZONTAL:
WASP-NAD83-S FEET
VERTICAL: NAVD88 FEET

NO.	REVISION	DATE	APRVD
4	ISSUED FOR TENDER	MAY 26	LDV
5	ISSUED FOR CONSTRUCTION	JLY 26	LDV
6	CONTROL CHANGES	DEC 20	
7	CONTROL CHANGES (2)	JAN 10	BE
8	AS-BUILT	DEC 7	BE

DRAWN JR
DESIGNED LDV
CHECKED GP
REVIEWED WJM/LMM

Amec Foster Wheeler
Environment & Infrastructure, Inc.
600 University Street, Suite 600
Seattle, Washington 98101

PROCESS FLOW AND INSTRUMENTATION
EXTRACTION AND MONITORING WELLS

B&L WOODWASTE SITE
PIERCE COUNTY, WASHINGTON

DATE: 10/23/15
PROJECT NO.: SE10160010

DRAWING
P&ID-05

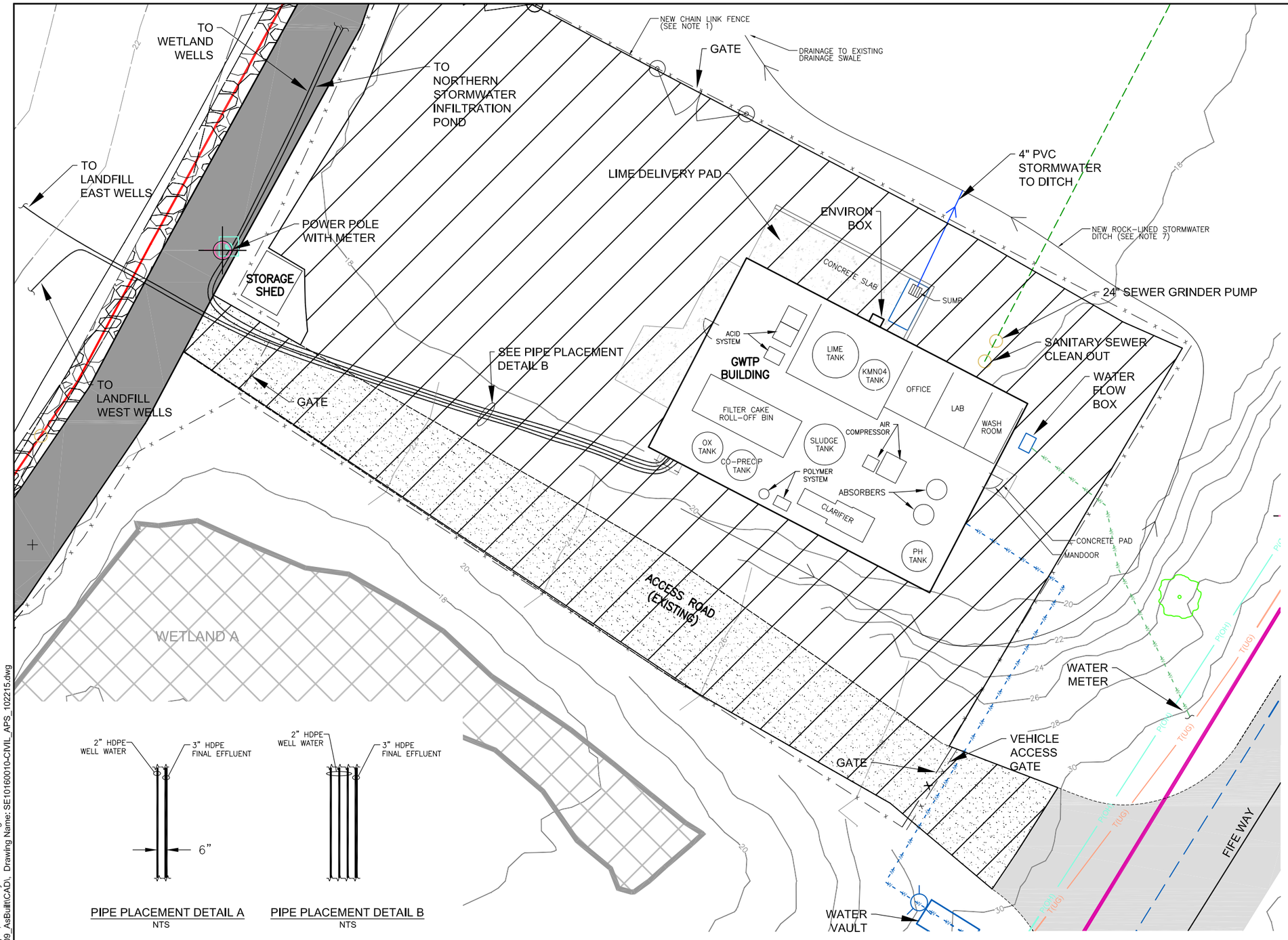

LEGEND:

- TAX PARCEL LINE
- EXISTING FENCE LINE
- WETLAND
- STORMWATER COLLECTION DITCH (EXISTING)
- 2" POTABLE WATER LINE
- 6" FIRE WATER LINE
- PERIMETER ROAD (EXISTING)
- HDPE PIPE
- SANITARY SEWER LINE
- DRAIN PIPE

NOTES:

1. NEW FENCE TO MATCH EXISTING.
2. SWINGING CHAIN LINK GATE, FULL WIDTH OF ACCESS ROAD, C/W LOCKING HARDWARE. HEIGHT TO MATCH EXISTING FENCE.
3. HATCHED AREA WILL BE USED AS ACCESS ROAD AND PARKING AREA AROUND BUILDING. SUPPLY AND PLACE 6-INCH THICK, UNIFORM LAYER OF CRUSHED SURFACING MATERIAL MEETING WSDOT 9-03.9(3) "CRUSHED SURFACING - TOP COURSE" WITHIN THE AREA INDICATED. SHAPE CRUSHED SURFACING TO REQUIRED CROWN ELEVATIONS AND CROSS-SLOPE GRADES TO PROMOTE POSITIVE DRAINAGE AWAY FROM BUILDING AREA (GENERALLY TO THE NORTH).
4. PIPING, CONDUIT, TRENCH, AND BACKFILL UNDER EXISING PERIMETER ROAD, ACCESS ROAD AND GRAVEL AREA AROUND BUILDING SHALL BE SUITABLE FOR HEAVY TRUCK TRAFFIC.
5. PIPING AND CONDUIT IS SHOWN TO ILLUSTRATE CONCEPT ONLY. FINAL SPACING AND LOCATION SHALL BE DETERMINED BY CONTRACTOR.
6. RAMMED AGGREGATE PIER FOUNDATIONS WILL BE CONSTRUCTED BY OTHERS TO STABILIZE SOIL BENEATH BUILDING. FINAL BUILDING SIZE, LOCATION, LAYOUT MUST BE SUITABLE FOR LOCATION OF THOSE EXISTING PIERS.
7. EXCAVATE DRAINAGE DITCH AT THE APPROXIMATE LOCATION INDICATED. SLOPE DITCH INVERT SUCH THAT POSITIVE DRAINAGE IS MAINTAINED IN THE DIRECTION SHOWN WITH DISCHARGE POINT LOCATED AS SHOWN. LINE DITCH WITH 2- TO 4-INCH DIAMETER QUARRY SPALLS TO ARMOR DITCH SIDEWALLS.
8. CONTRACTOR TO PROVIDE ADDITIONAL FILL TO COMPENSATE FOR MAXIMUM 6 INCHES OF SETTLEMENT IN HATCHED AREA OUTSIDE OF BUILDING, BEFORE PLACING CRUSHED ROCK SURFACING. UTILIZE RECOVERED FILL FROM EXCAVATION ACTIVITIES FOR BUILDING FOUNDATION ETC WHERE POSSIBLE. PROVIDE IMPORTED MATERIAL TO MATCH EXISTING FILL (WSDOT 9-03.14(2) "SELECT BORROW") WHERE NECESSARY.
9. WHERE NATIVE SOIL IS LESS THAN 2 FT BELOW ANY SUMPS, FOOTINGS, OR OTHER NEW STRUCTURES, OVER EXCAVATE BY A MINIMUM OF 2 FEET AND PLACE AND COMPACT FILL IN SUITABLE LIFTS. FILL MATERIAL SHALL MEET WSDOT 9-03.14(2) "SELECT BORROW". UTILIZE RECOVERED FILL FROM EXCAVATION WHERE POSSIBLE.
10. PROVIDE SUITABLE YARD LIGHTING ABOVE EACH BUILDING DOOR AND FOR PARKING AREA WEST OF BUILDING.
11. TIE BUILDING ROOF GUTTERS AND DOWNSPOUTS INTO NEW STORMWATER DRAINAGE DITCH.

PIPING LOCATIONS BASED ON SURVEY AND CONTRACTOR MARKUPS.

SCALE BAR (1" = 20'-0")

0 20'-0" 40'-0" 60'-0"

RECORD DRAWING

REFERENCES:	NO.	REVISION	DATE	APRVD
PLANS	1			
	2			
DATUM HORIZONTAL: WASP-NAD83-S FEET VERTICAL: NAVD88 FEET	3			
	4			

DRAWN
DESIGNED
CHECKED
REVIEWED

FLOYD | SNIDER

amec foster wheeler

GROUNDWATER TREATMENT PLANT PARTIAL SITE PLAN

B&L WOODWASTE SITE
PIERCE COUNTY, WASHINGTON

DATE: 10/27/14

PROJECT NO.: SE10160010

DRAWING C-03

Plot Date: 10/22/15 - 1:33pm, Plotted by: adam.stenberg
Drawing Path: S:\13488\009_AsBuilt\CAD\, Drawing Name: SE10160010-CIVIL_APS_102215.dwg

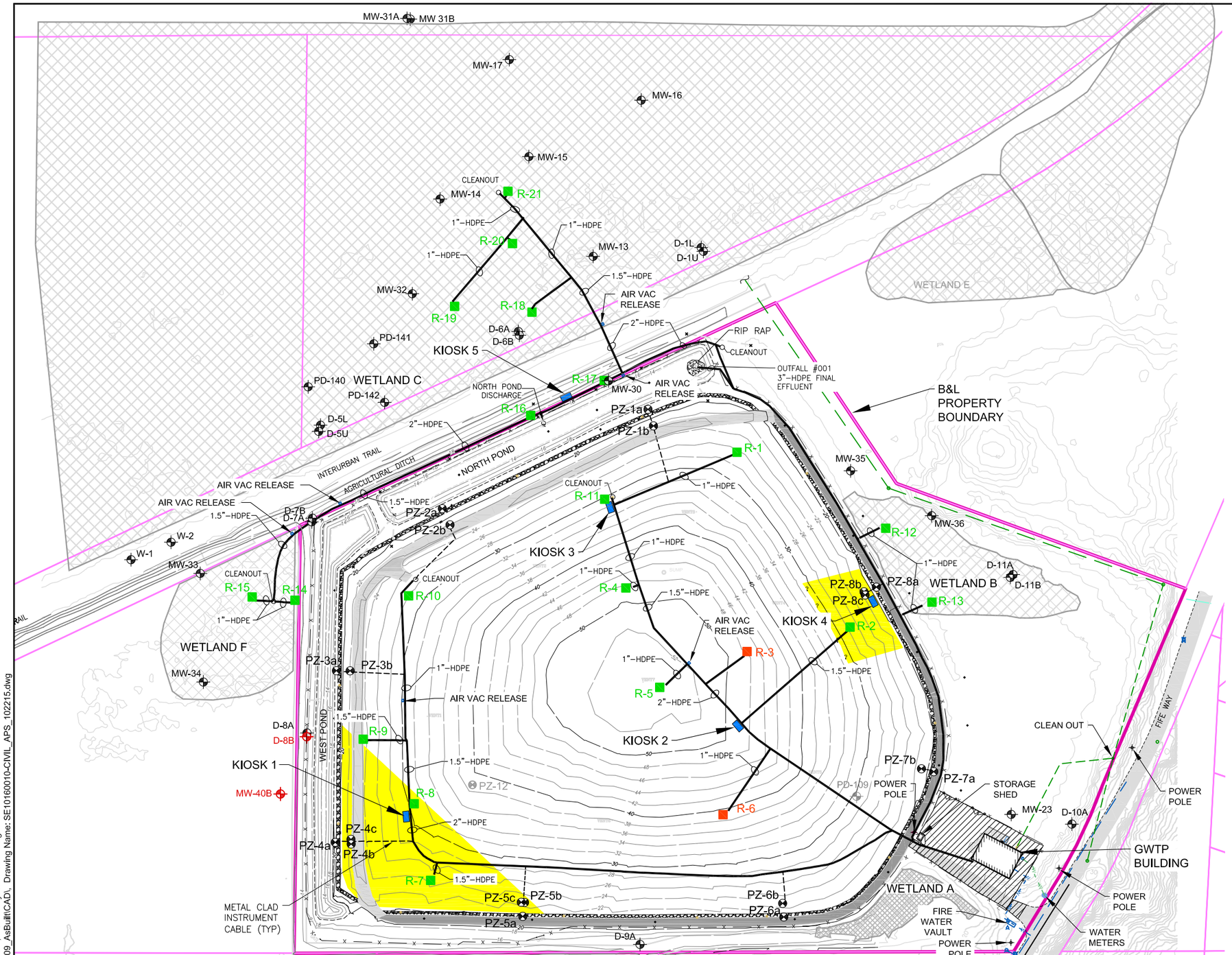

LEGEND:

- TAX PARCEL LINE
- FENCE LINE
- 12" DIAMETER CULVERT
- AGRICULTURAL DITCH
- WETLAND
- STORMWATER COLLECTION DITCH
- PERIMETER ROAD
- GROUNDWATER COLLECTION LINE
- COMMUNICATION LINE
- 2" POTABLE WATER LINE
- 6" FIRE WATER LINE
- WATER LINE
- SANITARY SEWER LINE
- R-5 EXTRACTION WELL
- R-3 EXTRACTION WELL (INACTIVE)
- MW-30 MONITORING WELL
- MW-40B SOUTHWEST CORNER MONITORING WELL
- PZ-8b PIEZOMETER

NOTE:

UNDERGROUND LINE LOCATIONS ARE APPROXIMATE.

- APPROXIMATE AREA OF GAP IN LOWER SILT AQUITARD

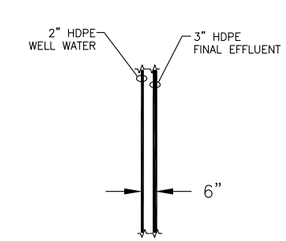

PIPE PLACEMENT DETAIL A
NTS

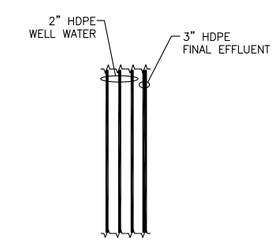

PIPE PLACEMENT DETAIL B
NTS

PIPING LOCATIONS BASED ON SURVEY AND CONTRACTOR MARKUPS.

SCALE BAR (1" = 150'-0")

0 150' 300' 450'

RECORD DRAWING

REFERENCES:
PLANS

DATUM
HORIZONTAL: WASP–NAD83–S FEET
VERTICAL: NAVD88 FEET

NO.	REVISION	DATE	APRVD
1			
2			
3			
4			
5			

DRAWN
DESIGNED
CHECKED
REVIEWED

FLOYD | SNIDER
amec foster wheeler

GROUNDWATER RECOVERY AND TREATMENT PLANT PIPING LAYOUT

B&L WOODWASTE SITE
PIERCE COUNTY, WASHINGTON

DATE: 10/23/15
PROJECT NO.: SE10160010
DRAWING C–04

Plot Date: 10/23/15 - 9:21am, Plotted by: adam.stenberg
Drawing Path: S:\13486\009_AsBuilt\CAD\, Drawing Name: SE10160010-CIVIL_APS_102215.dwg

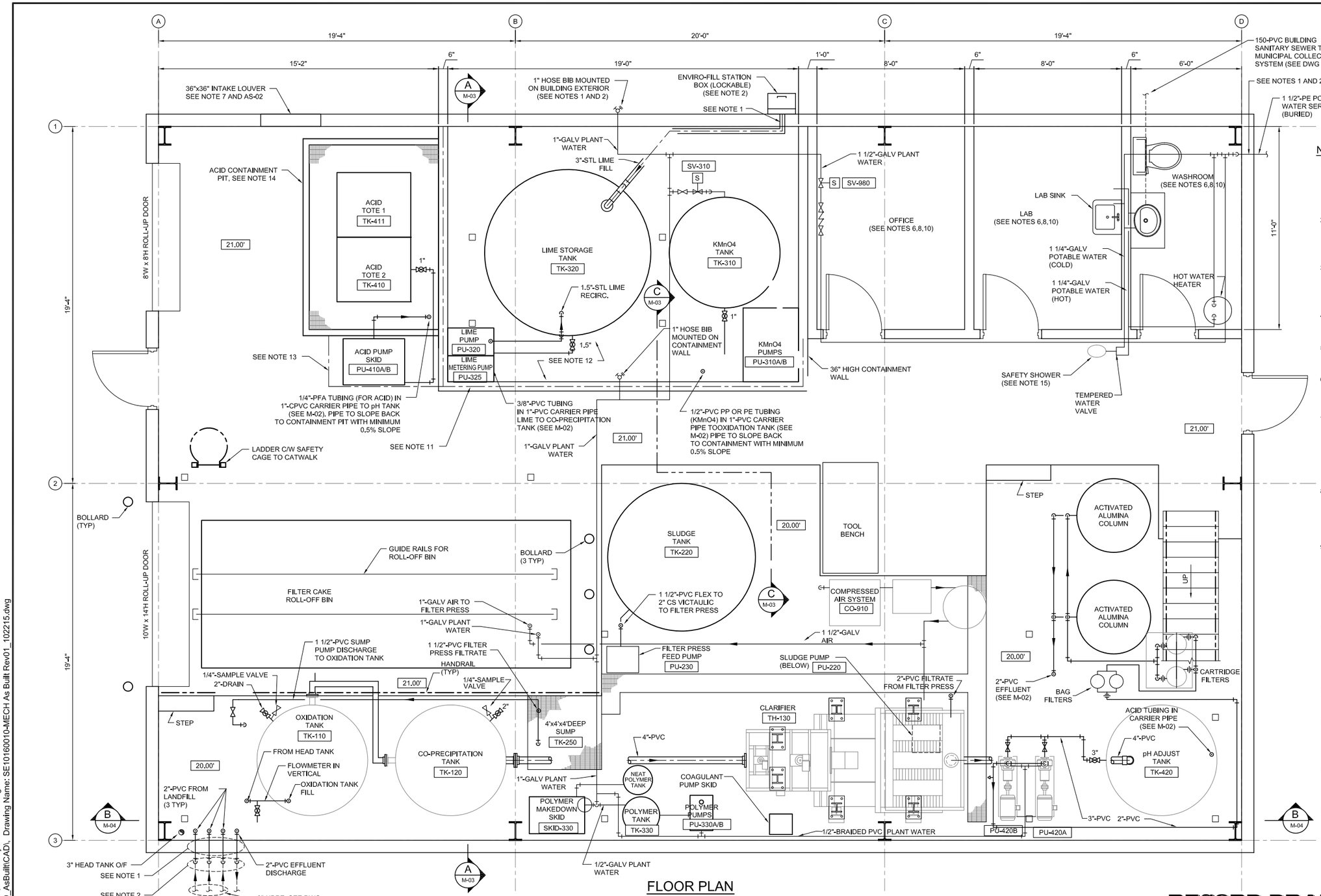

FLOOR PLAN

NOTES:

1. ALL PROCESS PIPING PENETRATIONS ARE TO PASS THROUGH THE BUILDING WALL EXCEPT THE SANITARY SEWER OUTLET. SUPPLY AND INSTALL FLEXIBLE CONNECTIONS CAPABLE OF PROVIDING MINIMUM OF 6-INCHES OF LINEAR EXPANSION AND CONTRACTION IN EACH LINE.
2. SUPPLY AND INSTALL SUITABLE FREEZE PROTECTION FOR ALL EXTERIOR EXPOSED PROCESS PIPING. EXTEND THERMAL INSULATION AND ELECTRIC HEAT TRACING MINIMUM 12-INCHES BELOW FINISHED GRADE ON BURIED PIPING.
3. LOCATE A MECHANICAL JOINT (GROOVED OR FLANGED) WITHIN 12-INCHES OF EACH CHANGE OF DIRECTION IN LIME SLURRY PIPING, SLUDGE PIPING, AND FILTER FEED PIPING TO ALLOW EASY DISASSEMBLY FOR CLEAN-OUT.
4. ENSURE ALL VALVES AND FIELD INSTRUMENTS CAN BE ACCESSED SAFELY FROM FINISHED FLOOR OR PLATFORM WITH GRATING.
5. SUPPLY AND INSTALL HEATING EQUIPMENT SIZED TO MAINTAIN TEMPERATURE OF 60°F INSIDE BUILDING MAIN TREATMENT AREA.
6. SUPPLY AND INSTALL HEATING EQUIPMENT SIZED TO MAINTAIN TEMPERATURE OF 70°F INSIDE OFFICE, LAB AND WASHROOM. LOCATE ROOM THERMOSTATS ON INTERIOR WALL.
7. SUPPLY AND INSTALL MECHANICAL VENTILATION SYSTEM SIZED TO PROVIDE 6 COMPLETE AIR CHANGES PER HOUR OF THE BUILDING MAIN TREATMENT AREA. SYSTEM TO INCLUDE STORM PROOF INTAKE LOUVRE, MANUAL INTAKE DAMPER, EXHAUST FAN, BACKDRAFT EXHAUST DAMPER AND EXHAUST LOUVRE. REFER TO AS-02 AND AS-03 FOR PRELIMINARY SIZE AND LOCATION.
8. SUPPLY AND INSTALL MECHANICAL VENTILATION SIZED TO PROVIDE 12 COMPLETE AIR CHANGES PER HOUR IN THE OFFICE, LAB, WASHROOM AND ELECTRICAL ROOM. PROVIDE LOCAL WALL SWITCH FOR ON/OFF OPERATION OF EXHAUST FAN. REFER TO AS-02 FOR PRELIMINARY SIZE AND LOCATION.
9. SUPPLY AND INSTALL CEILING OR WALL MOUNTED LIGHT FIXTURES IN MAIN BUILDING TREATMENT AREA. LOCATE LIGHT SWITCHES ON INTERIOR WALLS AT EACH MAN DOOR.
10. SUPPLY AND INSTALL CEILING MOUNTED LIGHT FIXTURES IN THE OFFICE, LAB, WASHROOM AND ELECTRICAL ROOM. LOCATE LIGHT SWITCH ON WALL INSIDE EACH ROOM ADJACENT TO MAN DOOR.
11. SUPPLY AND INSTALL TRANSPARENT PROTECTIVE BARRIER AND SUPPORT STRUCTURE MOUNTED ON TOP OF CONCRETE CONTAINMENT WALL EXTENDING TO 10 ft ABOVE FINISHED FLOOR LEVEL. PROVIDE REMOVABLE PANELS TO ALLOW QUICK OPERATOR ACCESS TO LIME SLURRY PUMP AND KMnO4 FEED PUMPS.
12. SUPPLY AND APPLY CHEMICAL RESISTANCE COATING TO EXPOSED FLOOR AND WALL SURFACES INSIDE THE CONTAINMENT AREA.
13. SUPPLY AND INSTALL REMOVABLE PVC CURTAIN WITH CORROSION RESISTANT SUPPORT FRAME AROUND ACID FEED SYSTEM. PROTECTIVE CURTAIN TO EXTEND FROM FINISHED FLOOR TO 6-ft 6-INCHES ABOVE FINISHED FLOOR.
14. SUPPLY AND APPLY CHEMICAL RESISTANCE COATING OR LINER IN CONTAINMENT SUMP UNDER ACID STORAGE TOTES. MATERIAL MUST BE SUITABLE FOR IMMERSION IN SULPHURIC ACID RANGING FROM 30 TO 95 wt%.
15. SUPPLY AND INSTALL CORROSION RESISTANT EMERGENCY EYEWASH AND SAFETY SHOWER. SUPPLY AND INSTALL TEMPERED WATER VALVE TO BLEND HOT WATER AND COLD WATER TO PRODUCE TEMPERED WATER SUPPLY TO SAFETY SHOWER AND PRESSURE SUSTAINING VALVE IN BUILDING POTABLE WATER SUPPLY DOWNSTREAM OF COLD WATER TAKEOFF FEEDING THE SAFETY SHOWER.

RECORD DRAWING

SCALE BAR: 0 2'-6" 5'-0" 7'-6"

REFERENCES:
PLANS

DATUM
HORIZONTAL: WASP-NAD83-S FEET
VERTICAL: NAVD88 FEET

NO.	REVISION	DATE	APRVD
1	SLUDGE PUMPS, BAG FILTERS, NEAT POLY	10/22	CDH

DRAWN PRV
DESIGNED BE
CHECKED GP
REVIEWED WJM

FLOYD | SNIDER
amec foster wheeler

GROUNDWATER TREATMENT PLANT
MECHANICAL LAYOUT - FLOOR PLAN

B&L WOODWASTE SITE
PIERCE COUNTY, WASHINGTON

DATE: 10/23/15
PROJECT NO.: SE10160010

DRAWING M-01

Plot Date: 10/23/15 - 9:34am, Plotted by: adam.stenberg
Drawing Path: S:\13488\009_AsBuilt\CAD\, Drawing Name: SE10160010-MECH As Built Rev01_102215.dwg

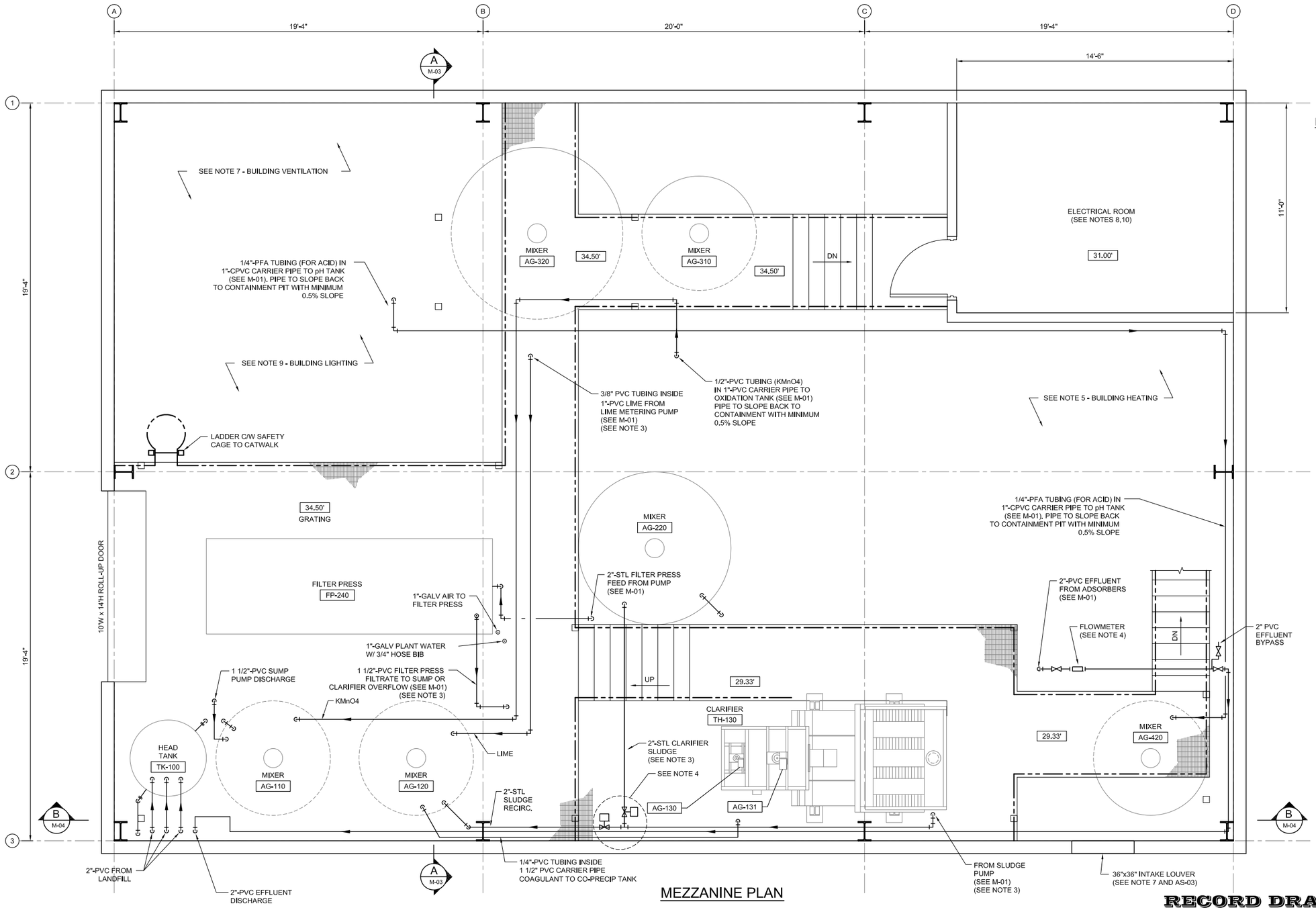

MEZZANINE PLAN

NOTES:

1. ALL PROCESS PIPING PENETRATIONS ARE TO PASS THROUGH THE BUILDING WALL EXCEPT THE SANITARY SEWER OUTLET. SUPPLY AND INSTALL FLEXIBLE CONNECTIONS CAPABLE OF PROVIDING MINIMUM OF 6-INCHES OF LINEAR EXPANSION AND CONTRACTION IN EACH LINE.
2. SUPPLY AND INSTALL SUITABLE FREEZE PROTECTION FOR ALL EXTERIOR EXPOSED PROCESS PIPING. EXTEND THERMAL INSULATION AND ELECTRIC HEAT TRACING MINIMUM 12-INCHES BELOW FINISHED GRADE ON BURIED PIPING.
3. LOCATE A MECHANICAL JOINT (GROOVED OR FLANGED) WITHIN 12-INCHES OF EACH CHANGE OF DIRECTION IN LIME SLURRY PIPING, SLUDGE PIPING, AND FILTER FEED PIPING TO ALLOW EASY DISASSEMBLY FOR CLEAN-OUT.
4. ENSURE ALL VALVES AND FIELD INSTRUMENTS CAN BE ACCESSED SAFELY FROM FINISHED FLOOR OR PLATFORM WITH GRATING.
5. SUPPLY AND INSTALL HEATING EQUIPMENT SIZED TO MAINTAIN TEMPERATURE OF 60°F INSIDE BUILDING MAIN TREATMENT AREA.
6. SUPPLY AND INSTALL HEATING EQUIPMENT SIZED TO MAINTAIN TEMPERATURE OF 70°F INSIDE OFFICE, LAB AND WASHROOM. LOCATE ROOM THERMOSTATS ON INTERIOR WALL.
7. SUPPLY AND INSTALL MECHANICAL VENTILATION SYSTEM SIZED TO PROVIDE 6 COMPLETE AIR CHANGES PER HOUR OF THE BUILDING MAIN TREATMENT AREA. SYSTEM TO INCLUDE STORM PROOF INTAKE LOUVRE, MANUAL INTAKE DAMPER, EXHAUST FAN, BACKDRAFT EXHAUST DAMPER AND EXHAUST LOUVRE. REFER TO AS-02 AND AS-03 FOR PRELIMINARY SIZE AND LOCATION.
8. SUPPLY AND INSTALL MECHANICAL VENTILATION SIZED TO PROVIDE 12 COMPLETE AIR CHANGES PER HOUR IN THE OFFICE, LAB, WASHROOM AND ELECTRICAL ROOM. PROVIDE LOCAL WALL SWITCH FOR ON/OFF OPERATION OF EXHAUST FAN. REFER TO AS-02 FOR PRELIMINARY SIZE AND LOCATION.
9. SUPPLY AND INSTALL CEILING OR WALL MOUNTED LIGHT FIXTURES IN MAIN BUILDING TREATMENT AREA. LOCATE LIGHT SWITCHES ON INTERIOR WALLS AT EACH MAN DOOR.
10. SUPPLY AND INSTALL CEILING MOUNTED LIGHT FIXTURES IN THE OFFICE, LAB, WASHROOM AND ELECTRICAL ROOM. LOCATE LIGHT SWITCH ON WALL INSIDE EACH ROOM ADJACENT TO MAN DOOR.
11. SUPPLY AND INSTALL TRANSPARENT PROTECTIVE BARRIER AND SUPPORT STRUCTURE MOUNTED ON TOP OF CONCRETE CONTAINMENT WALL EXTENDING TO 10 ft ABOVE FINISHED FLOOR LEVEL. PROVIDE REMOVABLE PANELS TO ALLOW QUICK OPERATOR ACCESS TO LIME SLURRY PUMP AND KMnO4 FEED PUMPS.
12. SUPPLY AND APPLY CHEMICAL RESISTANCE COATING TO EXPOSED FLOOR AND WALL SURFACES INSIDE THE CONTAINMENT AREA.
13. SUPPLY AND INSTALL REMOVABLE PVC CURTAIN WITH CORROSION RESISTANT SUPPORT FRAME AROUND ACID FEED SYSTEM. PROTECTIVE CURTAIN TO EXTEND FROM FINISHED FLOOR TO 6-ft 6-INCHES ABOVE FINISHED FLOOR.
14. SUPPLY AND APPLY CHEMICAL RESISTANCE COATING OR LINER IN CONTAINMENT SUMP UNDER ACID STORAGE TOTES. MATERIAL MUST BE SUITABLE FOR IMMERSION IN SULPHURIC ACID RANGING FROM 30 TO 95 wt%.
15. SUPPLY AND INSTALL CORROSION RESISTANT EMERGENCY EYEWASH AND SAFETY SHOWER. SUPPLY AND INSTALL TEMPERED WATER VALVE TO BLEND HOT WATER AND COLD WATER TO PRODUCE TEMPERED WATER SUPPLY TO SAFETY SHOWER AND PRESSURE SUSTAINING VALVE IN BUILDING POTABLE WATER SUPPLY DOWNSTREAM OF COLD WATER TAKEOFF FEEDING THE SAFETY SHOWER.

SCALE BAR
0 2'-6" 5'-0" 7'-6"

RECORD DRAWING

REFERENCES:
PLANS

DATUM
HORIZONTAL: WASP--NAD83--S FEET
VERTICAL: NAVD88 FEET

NO.	REVISION	DATE	APRVD

DRAWN PRV
DESIGNED BE
CHECKED GP
REVIEWED WJM

FLOYD | SNIDER
amec foster wheeler

GROUNDWATER TREATMENT PLANT
MECHANICAL LAYOUT - MEZZANINE PLAN

B&L WOODWASTE SITE
PIERCE COUNTY, WASHINGTON

DATE: 10/22/15
PROJECT NO.: SE10160010
DRAWING M-02

Plot Date: 10/22/15 - 1:39pm, Plotted by: adam.stenberg
Drawing Path: S:\13488\009_AsBuilt\CAD\, Drawing Name: SE10160010-MECH As Built Rev01_1022215.dwg

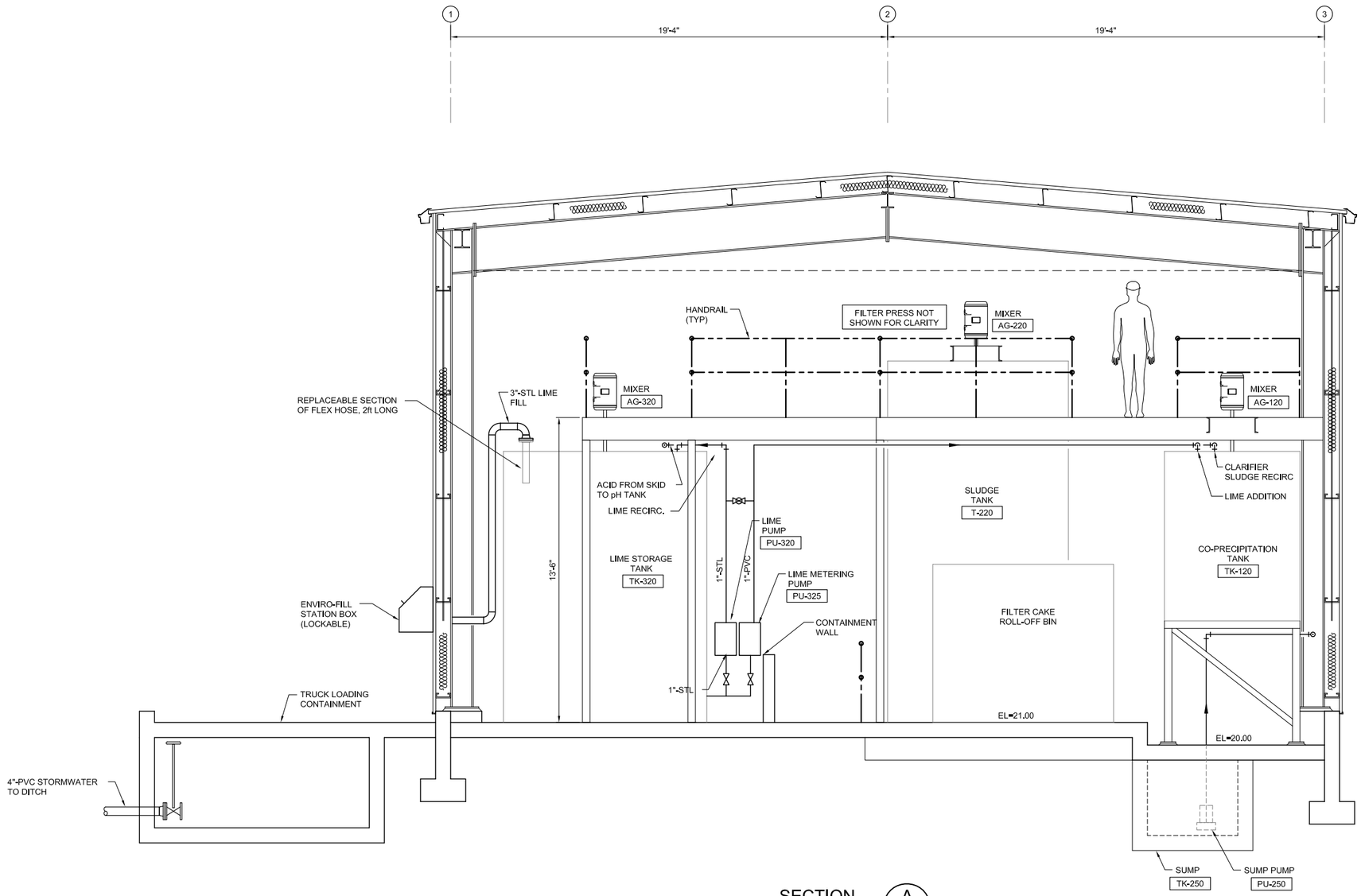

SECTION A
M-01, M-02

RECORD DRAWING

SCALE BAR 0 2'-6" 5'-0" 7'-6"

REFERENCES:
PLANS

DATUM
HORIZONTAL: WASP-NAD83-S FEET
VERTICAL: NAVD88 FEET

NO.	REVISION	DATE	APRVD
1	ISSUED FOR PLANS & SPECIFICATIONS	04/20/11	-
2	ISSUED FOR TENDER	05/20/11	WJM
3	TRANSMITTED TO CONTRACTOR	JLY 13	-

DRAWN PRV
DESIGNED BE
CHECKED GP
REVIEWED WJM

FLOYD | SNIDER
amec foster wheeler

GROUNDWATER TREATMENT PLANT
MECHANICAL LAYOUT - SECTION-A

B&L WOODWASTE SITE
PIERCE COUNTY, WASHINGTON

DATE: 10/22/15
PROJECT NO.: SE10160010

DRAWING M-03

Plot Date: 10/22/15 - 1:39pm, Plotted by: adam.stenberg
Drawing Path: S:\13488\009_AsBuilt\CAD\, Drawing Name: SE10160010-MECH As Built Rev01_102215.dwg

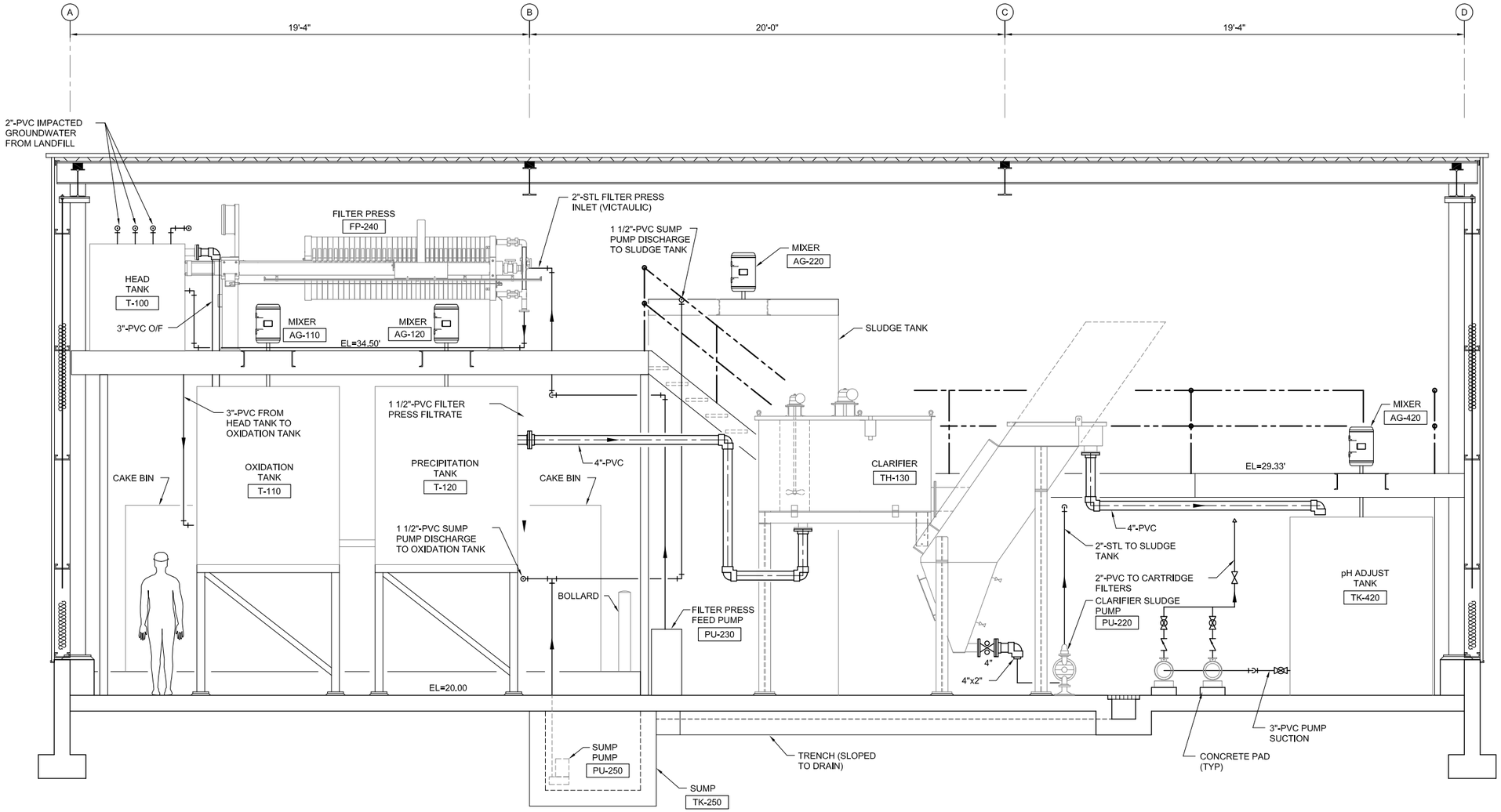

SECTION B
M-01, M-02

RECORD DRAWING

SCALE BAR
0 2'-6" 5'-0" 7'-6"

REFERENCES:
PLANS

DATUM
HORIZONTAL: WASP-NAD83-S FEET
VERTICAL: NAVD88 FEET

NO.	REVISION	DATE	APRVD
1	ISSUED FOR PLANS & SPECIFICATIONS	04/20/11	-
2	ISSUED FOR TENDER	05/20/11	WJM
3	TRANSMITTED TO CONTRACTOR	JLY 13	-

DRAWN PRV
DESIGNED BE
CHECKED GP
REVIEWED WJM

FLOYD | SNIDER
amec foster wheeler

GROUNDWATER TREATMENT PLANT
MECHANICAL LAYOUT - SECTION-B

B&L WOODWASTE SITE
PIERCE COUNTY, WASHINGTON

DATE: 10/22/15
PROJECT NO.: SE10160010

DRAWING
M-04

Plot Date: 10/22/15 - 1:40pm, Plotted by: adam.stenberg
Drawing Path: S:\13488\009_AsBuilt\CAD\, Drawing Name: SE10160010-MECH As Built Rev01_102215.dwg

INSTRUMENT IDENTIFICATION

GENERAL INSTRUMENT OR FUNCTION SYMBOLS

	FIELD MOUNTED	PRIMARY LOCATION NORMALLY ACCESSIBLE TO OPERATOR	AUXILIARY LOCATION NORMALLY ACCESSIBLE TO OPERATOR
DISCRETE INSTRUMENTS	X / X–X–X	X / X–X–X	X / X–X–X
SHARED DISPLAY, SHARED CONTROL	X / X–X–X	X / X–X–X	X / X–X–X
COMPUTER FUNCTION	X / X–X–X	X / X–X–X	X / X–X–X
PROGRAMABLE LOGIC CONTROL	X / X–X–X	X / X–X–X	X / X–X–X

NORMALLY INACCESSIBLE OR BEHIND–THE–PANEL DEVICES OR FUNCTIONS ARE DEPICTED BY THE SAME SYMBOLS BUT WITH DASHED HORIZONTAL BARS,
i.e.

X / X–X–X X / X–X–X X / X–X–X

ISA INSTRUMENTATION IDENTIFICATION LETTERS

LETTER	FIRST LETTER (S)		SUCCEEDING LETTERS		
	PROCESS OR INITIATING VARIABLE	MODIFIER	READOUT OR PASSIVE FUNCTION	OUTPUT FUNCTION	MODIFIER
A	ANALYSIS		ALARM		
B	BURNER FLAME		USERS CHOICE	USERS CHOICE	USERS CHOICE
C	CONDUCTIVITY			CONTROL	
D	DENSITY (S.G)	DIFFERENTIAL			
E	VOLTAGE		PRIMARY ELEMENT		
F	FLOW RATE	RATIO			
G	GAUGE		GLASS	GATE	
H	HAND (MANUAL)				HIGH
I	CURRENT		INDICATE		
J	POWER	SCAN			
K	TIME OR SCHEDULE			CONTROL STATION	
L	LEVEL		LIGHT (PILOT)		LOW
M	MOTION/MOISTURE				MIDDLE
N	TURBIDITY		MIDDLE/INTERMEDIATE		
O	USERS CHOICE		ORIFICE		
P	PRESSURE (OR VACUUM)		POINT (TEST CONNECTION)		
Q	QUANTITY OR EVENT	INTEGRATE	INTEGRATE		
R			RECORD OR PRINT		
S	SPEED OR FREQUENCY	SAFETY		SWITCH	
T	TEMPERATURE			TRANSMITTER	
U	MULTIVARIABLE		MULTIFUNCTION	MULTIFUNCTION	MULTIFUNCTION
V	VISCOSITY			VALVE OR DAMPER	
W	WEIGHT OR FORCE		WELL		
X	AS DEFINED				
Y	STATUS			RELAY OR COMPUTE	
Z	POSITION			DRIVE, ACTUATE OR	
				UNCLASSIFIED FINAL CONTROL ELEMENT	

LINE LEGEND

- PROCESS (CLOSED CONDUIT, DASHED LINE INDICATES ALTERNATE FLOW STREAM)
- PROCESS (OPEN CHANNEL)
- A — ANALOG SIGNAL (4 TO 20 mAdc, ETC.)
- DISCRETE SIGNAL (ON/OFF, ETC.)
- COMPRESSED AIR
- PNEUMATIC SIGNAL
- FILLED SYSTEM SIGNAL
- HYDRAULIC SYSTEM SIGNAL
- SONIC SIGNAL
- PACKAGED BUILDING OR FACILITY BOUNDARY
- CONNECTING LINES
- NON–CONNECTING LINES
- HEAT TRACE

ABBREVIATIONS & LETTER SYMBOLS

AC	ALTERNATING CURRENT
CCS	CENTRAL CONTROL SYSTEM
CSC	CAR SEAL CLOSED
CSO	CAR SEAL OPEN
CP–X	CONTROL PANEL NO. X
CS	CARBON STEEL
DC	DIRECT CURRENT
DISC	DISCONNECT
ES	EMERGENCY STOP
FOS	FAST–OFF–SLOW
FOSA	FAST–OFF–SLOW–AUTO
FOSR	FAST–OFF–SLOW–REMOTE
FR	FORWARD–REVERSE
GALV	GALVANIZED STEEL
HOA	HAND–OFF–AUTO
HOR	HAND–OFF–REMOTE
LEL	LOWER EXPLOSIVE LIMIT
LCP	LOCAL CONTROL PANEL
LOS	LOCKOUT STOP
LR	LOCAL–REMOTE
MA	MANUAL–AUTO
MC	MODULATE–CLOSE
MCC	MOTOR CONTROL CENTRE
NC	NORMALLY CLOSED
NO	NORMALLY OPEN
OC	OPEN–CLOSE (D)
OCR	OPEN–CLOSE–REMOTE
OCA	OPEN–CLOSE–AUTO
OO	ON–OFF
OOA	ON–OFF–AUTO
OOR	ON–OFF–REMOTE
OSC	OPEN–STOP–CLOSE
REM	REMOTE
RPU	REMOTE PROCESSING UNIT
SF	SLOWER–FASTER
SS	START–STOP
SSC	SUPERVISORY SET POINT CONTROL
VIB	VIBRATION
TK	TANK
SKID	SKID
FIL	FILTER
ADS	ADSORBER

PUMP AND COMPRESSOR SYMBOLS

- CENTRIFUGAL PUMP
- CHEMICAL FEED DIAPHRAGM PUMP
- OCUBLE DIAPHRAGM PUMP
- GEAR PUMP OR BLOWER (POSITIVE DISPLACEMENT)
- PISTON PUMP
- PROGRESSIVE CAVITY PUMP
- SUBMERSIBLE SUMP PUMP
- COMPRESSOR (CENTRIFUGAL) BLOWER OR TURBINE
- COMPRESSOR (PISTON)
- PERISTALTIC PUMP

MISCELLANEOUS SYMBOLS

- SIGHT GLASS
- DIAPHRAGM SEAL
- BLIND FLANGE
- AIR GAP
- VENT TO ATMOSPHERE
- RUPTURE DISK
- M — ELECTRIC MOTOR
- PRESSURE GAUGE
- AIR FILTER
- CALIBRATION COLUMN
- CAM–LOCK
- REDUCER
- Y–STRAINER

PRIMARY ELEMENT SYMBOLS

- ORIFICE PLATE
- F — ROTO METER
- ELECTROMAGNETIC FLOWMETER
- PROPELLER OR TURBINE METER
- LEVEL (ULTRASONIC)
- LEVEL (FLOAT)
- OPTICAL SWITCH

ACTUATOR SYMBOLS

- P Z — PNEUMATIC W/POSITIONER
- P S — PNEUMATIC W/SOLENOID
- E — ELECTRIC/MOTOR
- E Z — ELECTRIC/MOTOR W/POSITIONER
- EH — ELECTROHYDRAULIC
- H — HYDRAULIC
- S — SOLENOID
- MANUAL

VALVE SYMBOLS

- UNION
- TRUE UNION BALL
- GATE
- K — KNIFE GATE
- BUTTERFLY
- GLOBE
- BALL
- V — VEE–BALL
- SEAT PORT — ECCENTRIC PLUG
- PLUG OR COCK
- NEEDLE
- DIAPHRAGM
- PINCH
- SWING CHECK
- BALL CHECK
- SPRING CHECK
- HOSE VALVE OR BIBB
- PRESSURE RELIEF
- PRESSURE/VACUUM RELIEF VALVE
- AIR AND/OR VACUUM RELEASE
- ACTUATOR — MOTORIZED VALVE TO TEMPERATURE SENSOR
- ACTUATOR — SOLENOID VALVE
- REGULATED SIDE — PRESSURE CONTROL

RECORD DRAWING

REFERENCES:
PLANS

DATUM
HORIZONTAL:
WASP–NAD83–S FEET
VERTICAL: NAVD88 FEET

NO.	REVISION	DATE	APRVD
3	ISSUED FOR TENDER	MAY 26	LDV
4	ISSUED FOR CONSTRUCTION	JLY 26	LDV
5	CONTROL CHANGES	DEC 20	
6	CONTROL CHANGES (2)	JAN 10	BE
7	AS–BUILT	DEC 7	BE

DRAWN JR
DESIGNED LDV
CHECKED GP
REVIEWED WJM/LMM

amec foster wheeler
Amec Foster Wheeler
Environment & Infrastructure, Inc.
600 University Street, Suite 600
Seattle, Washington 98101

PROCESS FLOW AND INSTRUMENTATION LEGEND

B&L WOODWASTE SITE
PIERCE COUNTY, WASHINGTON

DATE: 10/23/15
PROJECT NO.: SE10160010

DRAWING
P&ID–00

Plot Date: 10/23/15 - 9:42am, Plotted by: adam.stenberg
Drawing Path: S:\13488\009_AsBuilt\CAD\, Drawing Name: SE10160010-PIDs_APS_102215.dwg

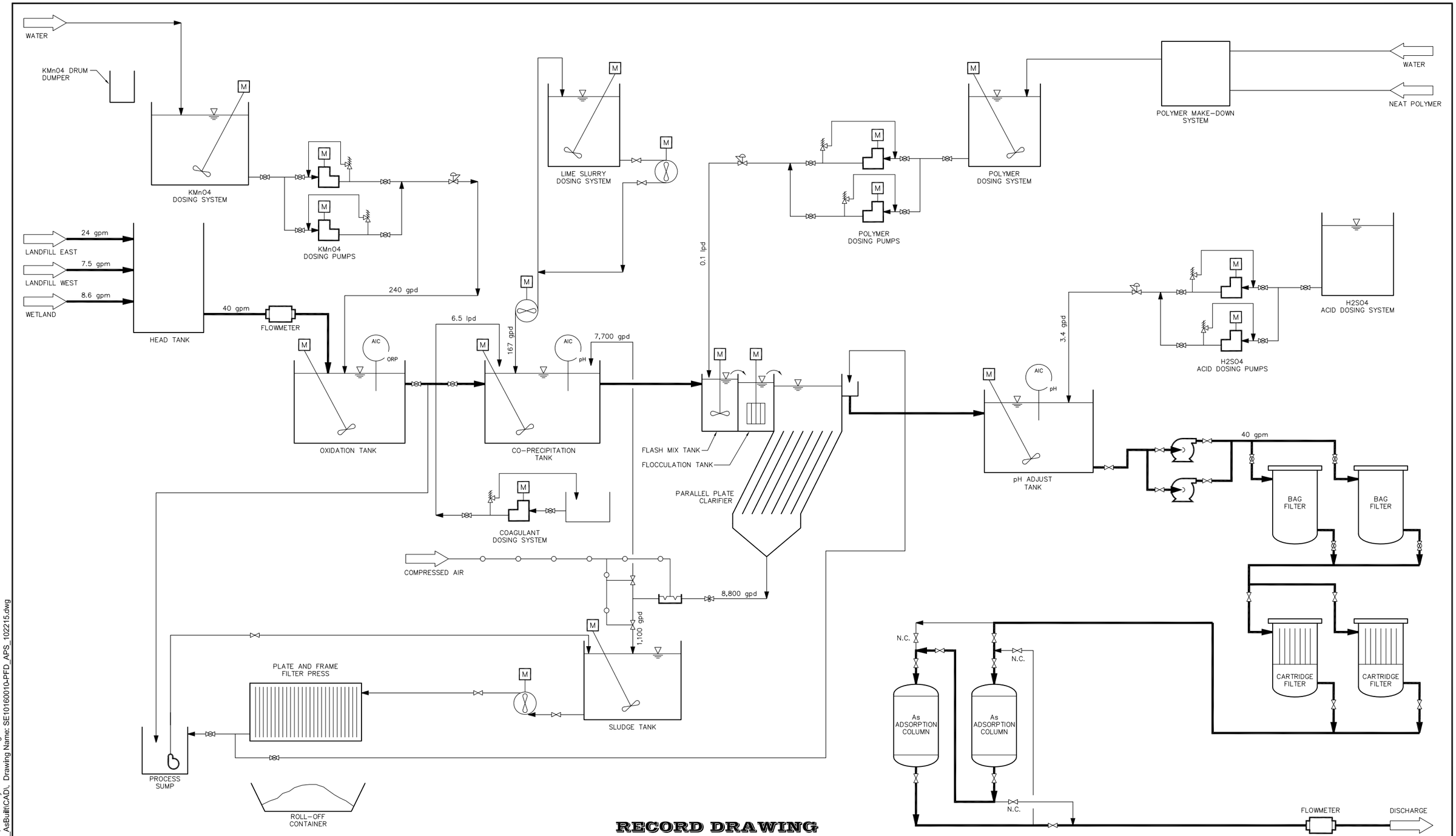

RECORD DRAWING

REFERENCES:
PLANS

DATUM
HORIZONTAL: WASP-NAD83-S FEET
VERTICAL: NAVD88 FEET

NO.	REVISION	DATE	APRVD
1	ISSUED FOR REVIEW	MAR 04	GP
2	ISSUED FOR SPECIFICATION PACKAGE REVIEW	APR 21	LDV
3	ISSUED FOR TENDER	MAY 26	LDV
4	ISSUED FOR CONSTRUCTION	JLY 26	LDV
5	AS-BUILT	DEC 7	BE

DRAWN PRV
DESIGNED CH
CHECKED GP
REVIEWED WJM/LMM

amec foster wheeler

Amec Foster Wheeler
Environment & Infrastructure, Inc.
600 University Street, Suite 600
Seattle, Washington 98101

PROCESS FLOW DIAGRAM

B&L WOODWASTE SITE
PIERCE COUNTY, WASHINGTON

DATE: 10/23/15
PROJECT NO.: SE10160010

DRAWING
PFD-01

Plot Date: 10/23/15 - 9:41am, Plotted by: adam.stenberg
Drawing Path: S:\13488\009_AsBuilt\CAD\, Drawing Name: SE10160010-PFD_APS_102215.dwg

Appendix A

Groundwater Treatment Plant Operations and Maintenance Procedures

Table of Contents

STANDARD OPERATION PROCEDURES:
B&L WOODWASTE GROUNDWATER TREATMENT SYSTEM
PROCEDURE 001 - DOCUMENTATION AND RECORDKEEPING
B&L Woodwaste Landfill
Milton, Washington

OPERATION PROCEDURES, GENERAL OVERVIEW

Introduction

This procedure outlines operational procedures for general documentation and recordkeeping at the B&L Woodwaste Site. Two primary forms of records and documentation are kept at the site; compliance documentation and site operations documentation. As part of the NPDES program, any records or documents associated with submittals, sample collection, or equipment used to satisfy the NPDES Permit requirements must be maintained onsite for a minimum of three years. In order to improve system performance and to ensure equipment is operating well on a proactive basis, documents and records are maintained onsite for all operations including routine sampling for system performance and maintenance for all treatment system components.

Pre-requisites to Do This Procedure

To do this procedure you must:

- Be fully trained for treatment system operations or be training in the area with someone who has been fully trained.
- Be fully trained for handling and management of dangerous wastes.
- Be familiar with all aspects of this operating procedure.
- Be Hazardous Waste Operations (HAZWOPER)-trained and current with annual training updates.

In This Procedure

Following is a list of topics in this Procedure:

1.0 SAFETY CONSIDERATIONS

Health and Safety Plan (HASP)	The most recent version of the HASP is maintained in the treatment building office and provides plans and requirements to protect the health and safety of workers involved in the operation and maintenance of the groundwater extraction and treatment system. All workers must be familiar with and sign the HASP. Specific requirements for Personal Protective Equipment (PPE) are included in the HASP. If there are any discrepancies between PPE requirements included in these procedures and PPE requirements specified in the HASP, the requirements specified in the HASP shall be followed.
Level of Hazard	**Low** Due to the presence of dangerous waste within the closed landfill, all personnel working at the site must be fully trained in accordance with 29 CFR 1910 and WISHA regulations. Forty-hour HAZWOPER training with yearly eight hour refresher training is required for anyone performing work at the B&L Woodwaste Site.

2.0 NPDES PERMIT RECORD KEEPING

Critical Information

All records corresponding to Permit submittals or equipment maintenance associated with the collection of Permit sampling parameters (effluent flow, pH, or effluent arsenic) must be maintained onsite and easily accessible for no less than three years from the submittal/collection date.

Procedure

Step	Maintenance Records
1	A copy of the updated NPDES Permit and any supporting documentation must be maintained onsite for the Permit period.
2	All permit reports must be maintained at the site and easily accessible for no less than three years. Permit reports include: -All DMRs (including COCs and lab analysis reports), -any Permit violation reports, -an updated copy of the O&M manual, -an updated copy of the Solid Waste Control Plan, -an updated copy of the Spill Control Plan, -reports outlining any treatment system bypasses or unanticipated discharges, -applications for the Permit or Permit renewal(s), -an updated copy of the Stormwater Pollution Prevention Plan, -reports for the receiving stream study and the outfall evaluation, -and any other permit submittals as defined in the most recent edition of the site Permit. More details for all submittals are given in the Permit maintained in the treatment plant office.
3	All maintenance items associated with the collection of the required Permit monitoring parameters; which include effluent flow, grab sample for pH, and effluent arsenic sampling. Any maintenance performed on any of the equipment used to collect the Permit parameters must be maintained onsite for a minimum of three years from the date of the required maintenance. Maintenance records will be kept in the treatment system office with all the other Permit documents discussed above.

3.0 MAINTENANCE RECORDS

Critical Information

Records of all maintenance operations will be kept onsite and easily accessible in the treatment system office. In addition, all maintenance checklists and process probe maintenance records will be filled out by the site operator and filed in the treatment system office. Checklists will include weekly, monthly, quarterly, semi-annually, and annually required maintenance tasks (checklists are discussed in more detail in Section 5.0 of this procedure).

Procedure

Step	Maintenance Records
1	Each piece of equipment should have an irregular maintenance log in the treatment plant office. Whenever a new piece of equipment is installed in the treatment system, an irregular maintenance log must be created (following the format of the other logs onsite) and filed with the other equipment information. In addition, annual safety inspections must be completed once a year by filling out the *"Annual Safety Inspection Table"* to ensure the reliable and safe operation of safety equipment onsite.
2	Make a note of any irregular maintenance performed on the equipment-specific irregular maintenance form when the maintenance is performed.
3	Regular maintenance should be noted on a regular maintenance log. In addition, checklists documenting the completion of the maintenance item will be filled out by the operator as discussed below. The calendar and checklists will be kept in the office of the treatment building.
4	Each process probe includes a Probe Maintenance Log specific to the serial number of the probe. Process probe maintenance will be completed as indicated on the checklists as outlined below.

4.0 MANAGEMENT OF CHANGE

Critical Information

Changes in the treatment system or groundwater recovery system will be noted and changed in all onsite references to prevent operator confusion. Any P&IDs or PFDs affected by the changes will also be updated, scanned and emailed to the process engineer to document the change.

Procedure

Step	Management of Change
1	All process changes shall be subjected to a documented safety and process review by a professional engineer before being implemented.

2	All changes shall be documented on the set of as-built drawings located in the office of the treatment plant.
3	Any other documentation shall be filed in the office in the treatment building including items such as; item specifications and drawings, operations and maintenance files, irregular maintenance logs, and any other relevant information. The checklist also needs to be updated reflecting the required scheduled maintenance.

5.0 PLC DATA DOWNLOAD

Critical Information

pH and flow data shall be obtained from the PLC and sent to the process engineer on a weekly basis. The data shall be annotated by a plant operator to communicate any shutdowns or other irregular operations.

Procedure

Step	PLC Data Download
1	Data may be downloaded by a plant operator at the PLC or by logging in remotely to the PLC and then by copying data over from the onsite desktop hard drive.
2	When logged into the onsite computer with the PLC navigation screen open, go to the “Trends” tab located on the lower left side of the PLC screen and select the parameter to view located at the top of the trend plot (pH, Levels, Flows, ORP, etc.).
3	Select the timeline for the data on the top of the graph (daily, weekly, monthly) and press the “save” button located on the top right of the graph to export the data to a .csv file. The .csv file will contain data from the time period seen on the graph. Use the arrows to cycle through recorded time.
4	Annotate any shutdowns or non-standard operation on the flow data sheet. Send weekly effluent pH and effluent flow data to the process engineer.

6.0 SITE CHECKLISTS

Critical Information

Site checklists are provided to simplify operator maintenance and monitoring scheduling and to ensure that preventative maintenance is completed as required to ensure smooth treatment system plant operations. Checklists will be filled out by the operator and signed certifying all tasks were completed. Checklists will be filed onsite and scanned and sent to the process engineer upon completion.

Procedure

Step	Site Checklists
1	In order to comply with the NPDES Permit for the site, grab samples must be measured for the pH in the effluent water once a week. A weekly log must be filled out documenting pH results and the lab pH sensor's calibration. All data must be recorded on the "*NPDES Weekly pH Sampling Checklist*" (attached to this procedure).
2	A weekly plant maintenance schedule is required for certain plant equipment and to take inventories to ensure that no plant down time will occur. The "*Weekly Equipment Checklist*" (attached to this procedure).
3	A weekly plant monitoring checklist is required to monitor the treatment process conditions and to make corrections as needed to maximize treatment system efficiency. The "*Weekly Process Checklist*" (attached to this procedure).
4	Monthly preventative maintenance and monitoring is required to ensure that the treatment plant will continue to operate efficiently and smoothly. Maintenance and required monitoring that need to be completed monthly are shown on the "*Monthly Process and Equipment Checklist*." The monthly checklist is attached to this procedure and must be completed once a month and should be completed at the beginning of each month.
5	Several of the pieces of equipment onsite require periodic maintenance that may consist of quarterly, semiannually, or annually maintenance tasks to ensure that equipment is properly oiled and greased or to catch hoses that may fail prior to them becoming an issue. Periodic maintenance tasks required are found in the *"Quarterly Equipment Checklist"* and the "*Semiannual/Annual Equipment Checklist*" (attached to this procedure). Monitoring well inspections are to occur on a quarterly basis as noted on the Quarterly Equipment Checklist and the *"Recovery Well Inspection Table"* is to be filled out documenting any problems observed during inspections.
6	All of the process probes require periodic cleaning, conditioning, and recalibration to ensure that process probes measure process conditions accurately. Process probe calibration will be recorded in the *"pH/ORP Probe Calibration Log"* and probe cleaning and conditioning will be recorded in the "*Weekly Equipment Checklist*" and the "*Monthly Process and Equipment Checklist*" respectively.

Groundwater Recovery and Treatment System: Weekly NPDES Checklist[1]
B&L Woodwaste Site

NPDES Grab Sample Effluent pH, Measurement by EPA 150.1 Procedure					Month/Year:	
Time	**Parameter**	**Method**	**Date/Time**	**Op Initials**	**Result**	**Unit**
Week 1 in month	Sample Temp, Buffer Temp	Lab Meter Reading				°F
	Lab Meter pH Result	Lab Meter Sample Reading using Stir Plate				pH
	Lab Meter pH Result	Lab Meter Buffer Reading using Stir Plate				pH
Week 2 in month	Sample Temp, Buffer Temp	Lab Meter Reading				°F
	Lab Meter pH Result	Lab Meter Sample Reading using Stir Plate				pH
	Lab Meter pH Result	Lab Meter Buffer Reading using Stir Plate				pH
Week 3 in month	Sample Temp, Buffer Temp	Lab Meter Reading				°F
	Lab Meter pH Result	Lab Meter Sample Reading using Stir Plate				pH
	Lab Meter pH Result	Lab Meter Buffer Reading using Stir Plate				pH
Week 4 in month	Sample Temp, Buffer Temp	Lab Meter Reading				°F
	Lab Meter pH Result	Lab Meter Sample Reading using Stir Plate				pH
	Lab Meter pH Result	Lab Meter Buffer Reading using Stir Plate				pH
Week 5 in month	Sample Temp, Buffer Temp	Lab Meter Reading				°F
	Lab Meter pH Result	Lab Meter Sample Reading using Stir Plate				pH
	Lab Meter pH Result	Lab Meter Buffer Reading using Stir Plate				pH

Notes:

1. Follow EPA procedure EPA 150.1 for NPDES effluent pH sample. Samples must be collected from the effluent sample port.

Groundwater Recovery and Treatment System: Weekly Process Checklist
B&L Woodwaste Site

Parameter	Location	Method	Procedure Reference	Date/ Time	Result	Unit	Op Initials
Arsenic (Total)	Influent	Hach Test Kit	P-010 6.0			µg/L	
Arsenic (Dissolved)	Adsorber Inlet	Hach Test Kit, Syringe Filter	P-010 6.0			µg/L	
Arsenic (Dissolved)	Adsorber Between	As Quick Test Kit, Syringe Filter	P-010 6.0			µg/L	
Arsenic (Dissolved)	Effluent	As Quick Test Kit, Syringe Filter	P-010 6.0			µg/L	
Iron (Ferrous)	Influent	Spectrophotometer	P-010 7.0			mg/L	
Iron (Total)	Influent	Spectrophotometer	P-010 8.0			mg/L	
Manganese	Influent	Spectrophotometer	P-010 9.0			mg/L	
ORP Dosing Ratio	PLC	Write down dosing ratio on PLC	--			--	
TSS	Clarifier Overflow	Spectrophotometer	P-010 10.0			mg/L	
	Bag Filter Inlet					mg/L	
	Bag Filter Effluent					mg/L	
	Cartridge Filter Effluent					mg/L	
Lime Specific Gravity	Lime Slurry Tank	1 L Beaker and Scale. Review Lime Procedures	P-320 9.0			Unitless	
Lab Meter pH Calibration	Lab	Cal @ pH 4.01, 7.00,10.01; Measure pH 7.00 buffer Before/After	P-010 4.0			SU	
Lab Meter ORP Calibration	Lab	Cal, Measure High ORP Std Before/After	P-010 5.0			mV	
ORP Measurement/ Process Check	Oxidation Tank	Note Process Meter Reading, Take Sample	P-100 5.0			mV	
		Lab Meter Reading, Stir Plate				mV	
pH Measurement/ Process Check	Co-precipitation Tank	Note Process Meter Reading, Take Sample	P-420 4.0			SU	
		Lab Meter Reading, Stir Plate				SU	
	pH Adjust Tank	Note Process Meter Reading, Take Sample				SU	
		Lab Meter Reading, Stir Plate				SU	
	System Effluent	Note Process Meter Reading, Take Sample				SU	
		Lab Meter Reading, Stir Plate				SU	
Data sent to AMEC?							

Groundwater Recovery and Treatment System: Weekly Equipment Checklist
B&L Woodwaste Site

Parameter	Location	Method	Procedure Reference	Date/Time	Maintenance Performed?	Op Initials
Piping	Influent to Head Tank, Between Head Tank and Oxidation Tank	Check flow for evidence of plugging. Clean as required per procedure.	P-020 2.0			
Piping	Between Oxidation Tank and Co-Precip Tank	Inspection in Flush Port for Sediments.	P-020 2.0			
ORP Sensor Calibration	Oxidation Tank	Inspection/Cleaning and reconditioning, Manual Calibration and Check High Standard Value Reading. Record High Standard Value and Sensor Value in	P-100 5.0		mV	
ORP Sensor Cleaning	Oxidation Tank	Inspection/Cleaning.	P-100 5.0			
pH Sensor Calibration	Co-Precipitation Tank and pH Adjust Tank	Inspection/Cleaning, Manual Calibration and Check With Standards/Lab pH Sensor. Record Neutral Standard Value Before and After Calibration.	P-120 4.0, P-420 4.0		SU	
pH Sensor Cleaning	Co-Precipitation Tank and pH Adjust Tank	Inspection/Cleaning.	P-120 4.0, P-420 4.0			
Lime Mixer Oil	Lime Tank	Inspect and Fill as Needed	P-320 10.0			
Air Compresor Belt	Air Compressor Housing	Manually Check Belt Tension.	P-910 4.0			
Air Compressor Cooling Oil	Air Compressor Housing	Manually Check Oil Level After 5 Min of Runtime. Whenever Changing Cooling Oil, Change Oil Filter and Oil Separator Cartridge.	P-910 4.0			
Air Compressor Control Mat and Cooler Mat	Air Compressor Housing	Inspect and Clean Filter Mats.	P-910 4.0			
Filter Press Components	Filter Press	Inspect and Clean as Required.	P-940 6.0			
Filter Press Fluid	Filter Press	Inspect and Fill Fluid in Filter Press Power Pack as Required.	P-940 6.0			
Updated Weekly Inventory:						
Spare permanganate drums onsite?						
Spare bag filters onsite?						
Spare changeouts of cartridge filters onsite?						
Spare coagulant pails onsite?						
Spare polymer pails onsite?						
Note Lime Tank Level. If Level is less than 28" work with process engineer for delivery/dilution.						

Groundwater Recovery and Treatment System Monthly Equipment Checklist
B&L Woodwaste Site

Parameter	Location	Method	Procedure Reference	Date/Time	Month/Year:	
					Maintenance Performed/ Result?	Op Initials
Inspect Piping in GWTP	All	Visual Inspection.	P-020 2.0			
Landfill Inspection	Landfill	Site Walk and Visual Inpsections.	P-020 5.0			
Security Inspections	Landfill/GWTP	Site Walk and Visual Inpsections.	P-020 6.0			
pH Sensor Reconditioing and Calibration	Co-Precipitation Tank and pH Adjust Tank	Inspection/Cleaning and Reconditioning, Manual Calibration and Check With Standards/Lab pH Sensor. Record Neutral Standard Value Before and After Calibration.	P-120 4.0, P-420 4.0		SU	
$KMnO_4$ Concentration (if necessary)	$KMnO_4$ Tank	Spectrophotometer, Review Lab Procedures.	P-010 11.0		g/L	
Lime Dosing Hose	Lime Tank	Inspection and Changeout.	P-320 5.0			
Lime Recirculation Pump	Lime Tank	Check Lubricant Level.	P-320 6.2			
Effluent Pumps	pH Adjust Tank	Switch Over Pump Mode	P-420 5.0			
Effluent pH Sensor	Adsorbers	Inspection/Cleaning, Manual Calibration and Check With Standards/Lab pH Sensor. Record Neutral Standard Value Before and After Calibration.	P-440 4.0		SU	
Sludge Pump	Sludge Tank	Check Lubricant Level.	P-940 6.2			
Filter Press Component Check	Filter Press	Perform Functionality Checks and Visual Inspections for Electrical Cables, Pipes, and Press Pieces.	P-940 6.0			
Check and Fill Out Inventory Checklist	All	Work Through Inventory Checklist and Order Items as Needed.				

Groundwater Treatment Systemn Quarterly Equipment Checklist
B&L Woodwaste Site

Parameter	Location	Method	Procedure Reference	Date/Time	Month/Year:	
					Maintenance Performed?	Op Initials
Piping and Valves	All Extraction Wells	Visual Inspection	P-020 2.0			
$KMnO_4$ Pump	$KMnO_4$ Tank	Inspections and Maintenance of Pump Components. Inspect Diaphram and Change as Necessary.	P-310 9.0			
$KMnO_4$ Basket Strainer	$KMnO_4$ Tank	Inspection and Cleaning	P-310 11.0			
Lime Recirc Pump Gear Box	Lime Tank	Inspection and Gearbox Oil Change	P-320 6.5			
Lime Mixer Lubricants	Lime Tank	Change Out Oil and Add Grease.	P-320 10.0			
Coagulant Pump	Coagulant Dosing Skid	Inspections and Maintenance of Pump Components.	P-326 3.0			
Acid Pump	Acid Dosing Skid	Inspections and Maintenance of Pump Components.	P-410 4.0			
Effluent Pumps	pH Adjust Tank	Inspection and Bearing Oiling	P-420 5.0			
Air Compressor Drive Belt	Air Compressor Housing	Visual Inspection of Drive Belt and Change if Required	P-910 4.0			
Air Compressor Air Filter	Air Compressor Housing	Visual Inspection of Air Filter and Change if Required.	P-910 4.0			
Double Diaphram Pumps	Clarifier	Visual Inspection and Tightening as Needed Repair/Replace Air or Fluid Side as Needed.	P-940 5.0			
Sludge Pump Gear Box	Sludge Tank	Inspection and Gearbox Oil Change	P-940 6.5			
Filter Press Lubrication	Filter Press	Follow Lubrication Schedule.	P-940 6.0			

Groundwater Treatment Systemn Recovery Well Inspection Table
B&L Woodwaste Site

Recovery Well	Location	Date/Time	Month/Year:		
			Comments	Maintenance Performed	Op Initials
R-01	North Landfill				
R-02	East Landfill				
R-04	Center Landfill				
R-05	Center Landfill				
R-07	South-West Landfill				
R-08	South-West Landfill				
R-09	West Landfill				
R-10	West Landfill				
R-11	North Landfill				
R-12	East Wetlands				
R-13	East Wetlands				
R-14	West Wetlands				
R-15	West Wetlands				
R-16	North Wetlands				
R-17	North Wetlands				
R-18	North Wetlands				
R-19	North Wetlands				
R-20	North Wetlands				
R-21	North Wetlands				

Groundwater Recovery and Treatment System Semiannual and Annual Equipment Checklist

B&L Woodwaste Site

Parameter	Location	Method	Procedure Reference	Month/Year:			Month/Year:		
				Semi Annual Inspection			Annual Inspection		
				Date/Time	Maintenance Performed?	Op Initials	Date/Time	Maintenance Performed?	Op Initials
Valves	All Locations	Functioning Check and Cleaning as Required	P-020 2.0						
Recovery Well Flowmeters - Turbine	All Extraction Wells	Visual Inspection for Damage, Battery Changeout If Required, Record Flow Total in Maintenance Performed Column	P-020 3.0		Flow Total:			Flow Total:	
Flowmeters - Magmeters	Influent and Effluent Line	Visual inspection for damage, check flow for evidence of fouling. Clean when required.	P-020 3.0						
ABB ORP/pH Transmitters	Oxidation Tank, Co-Precip Tank, and pH Adjust Tank.	Manual Calibration	P-100 5.0, P-120 4.0, P-420 4.0						
Tank Mixers	Ox Tank, Co-Precip Tank, Permanganate Tank, Polymer Tank, pH Adjust Tank, Sludge Tank	Inspections and Maintenance	P-100 6.0, P-120 3.0, P-310 8.0, P-330 4.0, P-420 6.0, P-940 4.0						
Lamella Clarifier Flash Mixer and Flocculator Mixer	Clarifier	Inspections and Maintenance	P-130 5.0, P-130 6.0						
$KMnO_4$ Pump	$KMnO_4$ Tank	Inspections and Maintenance. Change Gear Oil. Inspect Diaphram and Change as Necessary.	P-310 9.0						
Llime Tank Recirculation Pump	Lime Tank	Inspection and Hose Replacement. Check Pump Seal and Wear Ring and replace if Necessary. Check Pressing Shoes for Visible Wear and Replace When Necessary.	P-320 6.4, P-320 6.6, P-320 6.7						
Coagulant Pump	Coagulant Dosing Skid	Inspections and Maintenance. Change Gear Oil. Inspect Diaphram and Change as Necessary.	P-326 3.0						
Acid Pump	Acid Dosing Skid	Inspections and Maintenance. Change Gear Oil. Inspect Diaphram and Change as Necessary.	P-410 4.0						
Air Compressor Check	Air Compressor Housing	Manual Checks and Visual Inspections.	P-410 4.0						
Sludge Tank Pump	Sludge Tank	Inspection and Hose Replacement. Check Pump Seal and Wear Ring and replace if Necessary. Check Pressing Shoes for Visible Wear and Replace When Necessary.	P-940 6.4, P-940 6.6, P-940 6.7						
Filter Press Oil/Filters	Filter Press	Change Hydraulic Oil and Oil Filters.	P-940 6.0						
Filter Press System Check	Filter Press	Check Performance/Running Conditions and Inspect System Components.	P-940 6.0						
Filter Press Lubrication	Filter Press	Follow Lubrication Schedule.	P-940 6.0						

pH Probe Calibration Log

Location:

S/N:

Date	Time	Buffers used	Before cal	After cal	Slope (relative to 59.16 mV)	Offset (mV)	Initials

Groundwater Recovery and Treatment System: Annual Safety Inspection
B&L Woodwaste Site

Parameter	Location	Method	Date/ Time	Result	Op Initials
Fire Extinguishers	Influent	Certification			
Sprinklers	All	Patriot Inspection by October			
Safety Wash	Outside Lab/Office	Examination of Piping			
		Water Temperature			
		Valve Activation			
		Flow Rate (> 20 GPM for 15 Minutes)			
Eye Wash	Adsorber Between	Examination of Piping			
		Water Temperature			
		Valve Activation			
		Flow Rate (> 0.4 GPM for 15 Minutes)			
MSDS Audit	Office	Audit MSDS Forms			
Chemical Storage	All Locations	Verify Compatibility and Safe Storage			

STANDARD OPERATION PROCEDURES:
B&L WOODWASTE GROUNDWATER TREATMENT SYSTEM
PROCEDURE 010 - LAB OPERATING PROCEDURES
B&L Woodwaste Landfill
Milton, Washington

OPERATION PROCEDURES, GENERAL OVERVIEW

Introduction

This procedure outlines operational procedures for laboratory analysis in the groundwater treatment system at the B&L Woodwaste Site.

Pre-requisites to Do This Procedure

To do this procedure you must:

- Be fully trained for treatment system operations or be training in the area with someone who has been fully trained.
- Be fully trained for handling and management of dangerous wastes.
- Be familiar with all aspects of this operating procedure.
- Be Hazardous Waste Operations (HAZWOPER)-trained and current with annual training updates.

In This Procedure

Following is a list of topics in this Procedure:

1.0 SAFETY CONSIDERATIONS

Health and Safety Plan (HASP)	The most recent version of the HASP is maintained in the treatment building office and provides plans and requirements to protect the health and safety of workers involved in the operation and maintenance of the groundwater extraction and treatment system. All workers must be familiar with and sign the HASP. Specific requirements for Personal Protective Equipment (PPE) are included in the HASP. If there are any discrepancies between PPE requirements included in these procedures and PPE requirements specified in the HASP, the requirements specified in the HASP shall be followed.
Level of Hazard	**Medium** There are hazardous materials used in the laboratory which necessitate proper PPE at all times. As such, all laboratory chemicals need to be properly labeled with the MSDS for each chemical located in the office of the groundwater treatment plant. Due to the presence of dangerous waste within the closed landfill, all personnel working at the site must be fully trained in accordance with 29 CFR 1910 and WISHA regulations. Forty-hour HAZWOPER training with yearly eight hour refresher training is required for anyone performing work at the B&L Woodwaste Site.

2.0 LABORATORY WASTE MANAGEMENT

Critical Information	Laboratory materials must be disposed of appropriately. Do not put chemical-contaminated material in the trash can. Absolutely no laboratory chemicals can be discharged down the laboratory sink. Chemicals must be placed in either the appropriate waste storage container in the lab or disposed of in the treatment process for chemicals that are used in the treatment process or groundwater samples.

Personal Protective Equipment

Safety Glasses	Nitrile Gloves

Procedure

Step	Laboratory Waste Management
1	Dispose of any reagents used in sampling the contaminated ground water in the appropriate Cole Parmer 3 L waste vessel located in the laboratory.

2	Dispose of any pH and ORP standards used in calibration procedures in the appropriate Cole Parmer 3 L waste vessel located in the laboratory.
3	Only ground water samples and chemicals used in the process may be disposed of back into the treatment system process. If unsure, verify with the process engineer.
4	Make sure any powder packets contain no chemicals before you put them in the trash.
5	Decontaminate all lab materials after each test. Decon water should be disposed of with testing/calibration chemicals in the appropriate 3 L waste vessel.

3.0 HOUSEKEEPING

Critical Information

Laboratory surfaces must be maintained and kept free of chemical containers or used materials. All chemicals must be returned to the appropriate storage location, away from incompatible chemicals.

Procedure

Step	Laboratory Housekeeping
1	Return all testing reagents, calibration standards, operation manuals, sample/testing logs, etc. to the proper location after use.
2	Document the lab testing date, time, and results on the appropriate spreadsheet based on record keeping procedures as defined in the Documentation and Record Keeping procedures (Procedure P-001).
3	Decontaminate all testing and analysis equipment immediately after use. Do not leave any dirty equipment in the lab.
4	Leave the lab as clean as it was prior to use. If new laboratory materials are purchased, label them with the labeler or store them in the properly labeled container.

4.0 PH MEASUREMENT

Critical Information

The Thermo Scientific Orion Dual Star™ pH/ISE/mV meter is used to measure the pH and ORP of ground water samples.

Personal Protective Equipment

Safety Glasses	Nitrile Gloves

Procedure

Step	pH Measurement (Prior to Effluent Measurements, Weekly at Other Locations)
1	Don appropriate PPE. Collect a sample from the desired location (co-precip, pH adjust, and effluent and note the in-line pH probe reading on the weekly plant checklist. For NPDES sampling (at the effluent sampling point), calibration temperature should also be noted on the NPDES plant checklist. NPDES effluent pH needs to be stirred as outlined in the EPA 150.1 procedure (see document at end of procedure for details).
2	Calibrate the machine with a three-point pH calibration
3	Pull out the “quick pH calibration” sheet tab located in the middle underside of the machine. Use pH 4.01, ph 7.00, and pH 10.01 standard solutions. Follow instructions to complete the calibration.
4	Insert the pH measurement electrode into the sample.
5	Document testing time and result on the weekly plant checklist. When sampling for NPDES at the effluent sample point, document buffer solution reading before and after measurement. Used pH buffer solutions can be saved for short periods of time. Follow laboratory waste management procedures discussed above.

Annual meter checks should be performed as outlined in the “Thermo Scientific Orion DUAL STAR pH/ISE Meter User Guide.” Excerpts for performing a manual meter self check are provided below for reference. Refer to user guide for more information:

Meter Self Test and Checkout

A meter self-diagnostic test is performed automatically when the meter is powered on and can be manually activated from the setup menu. The self test that is performed during the meter power up does not require any operator action. If the self test is activated from the setup menu, the operator must press the meter keys when prompted during the test.

Meter Self Test

1. In the measurement mode, press the **setup** key to enter the setup menu. Press the ▲ / ▼ keys to highlight *Instrument Parameters* and press the **f2 (select)** key. Press the ▲ / ▼ keys to highlight *Troubleshooting* and press the **f2 (select)** key.

2. Press the ▲ / ▼ keys to highlight *Self Test* and press the **f2 (accept)** key.

3. Disconnect all of the electrodes and probes from the meter, attach both BNC shorting caps to the two BNC inputs and press the **f2 (yes)** key.

4. Press the **f2 (yes)** key to start the self test.

5. The meter will perform an accuracy test. When the meter displays *Accuracy Test Passed*, press the **f2 (next)** key.

6. The meter will perform an EPROM test. When the meter displays *E2Prom Test Passed*, press the **f2 (next)** key.

7. The meter will perform a keypad test. Press each of the blinking keys shown on the display in the order that they are shown. When the meter displays *Keypad Test Passed*, press the **f2 (next)** key.

8. The meter will display *Self Test Passed*. Press the **f1 (escape)** key to return to the measurement mode.

Note: *If any problems are found during the self test, refer to the* ***Meter Error Codes*** *section.*

Meter Checkout

1. After the self test is complete, the meter will return to the measurement mode. Keep all of the electrodes disconnected from the meter and keep the BNC shorting caps attached to the BNC inputs on the meter.

2. Set the measurement mode for both channels to pH. The meter should read a steady 7.000 pH ± 0.002 pH on both channels. If the meter does not read a steady 7.000 ± 0.002, perform a one point pH calibration with the BNC shorting caps attached to the BNC inputs. Set the pH value to 7.000 and the slope value to 100.0. Refer to the **pH Calibration Procedure** section for detailed instructions.

3. In the measurement mode, the meter should read a steady 0.0 mV ± 0.2 mV. If the meter does not read a steady 0.0 mV ± 0.2 mV with the BNC shorting caps attached to the BNC inputs, contact Technical Support.

5.0 ORP MEASUREMENT

Critical Information

The Thermo Scientific Orion Dual Star™ pH/ISE/mV meter is used to measure the pH and ORP of water samples.

Personal Protective Equipment

Safety Glasses	Latex or Nitrile Gloves

Procedure

Step	ORP Measurement (Weekly)
1	Don appropriate PPE. Collect sample from the oxidation tank and document the in-line ORP meter reading on the weekly plant checklist.
2	Pull out the “quick pH calibration” sheet tab located in the middle of the underside of the machine. Use the ORP quick-cal solution located in the lab to do a two-point calibration. The ORP procedure is the same as the pH procedure listed on the instruction tab, except using the ORP quick-cal solution.
3	Insert the ORP measurement electrode into the sample.
4	Document testing time and result in the weekly plant checklist.

6.0 ARSENIC MEASUREMENT

Critical Information

Arsenic is measured in the influent of the groundwater treatment plant, in the influent to the lead adsorber unit, in between the lead and the lag adsorber units, and in the effluent of the lag adsorber. Weekly measurements of arsenic must be taken to track system performance and to schedule media change outs in order to maintain Permit compliance. Samples that are taken from in between the adsorbers and in the effluent to the adsorbers will be sampled by using the As Quick II low range test kit. Arsenic coming into the plant and into the adsorbers will be measured using the Hach test kit. The procedure for the Hach and the As Quick II arsenic testing can be found in the testing procedures box in the lab.

Personal Protective Equipment

Safety Glasses	Nitrile Gloves

Procedure

Step	Arsenic Hach Test Stip Measurements (Weekly)
1	Don PPE listed above.
2	Obtain water sample from desired location in treatment system. Plant effluent, between adsorbers, adsorber influent, and Plant influent should all be measured on a weekly basis.
3	Lift the flap on the black cap and slide a test strip into the groove so that the reactive pad faces the small opening and completely covers it; secure by pressing the flap back in place.
3	Fill the reaction vessel with sample water to the fill line (50mL).
4	Add the contents of 1 reagent #1 powder pillow to the sample and swirl to dissolve. **NOTE: DO NOT ALLOW ANY LIQUID TO CONTACT TEST STRIP DURING THIS OR ANY STEP.**
5	Add the contents of 1 reagent #2 powder pillow to the sample and swirl to dissolve.
6	Wait for at least 3 minutes.
7	Add the contents of 1 reagent #3 powder pillow to the sample and swirl to mix.
8	Wait at least 2 minutes and swirl again to mix.
9	Using the plastic scoop, add 1 level scoop of reagent #4 to the sample and swirl to mix.
10	Add the contents of 1 reagent #5 powder pillow to the sample.
11	Immediately attach the black cap, with the test strip inserted, to the reaction vessel. **Do not shake or invert!**
12	Allow vessel to react for at least 30 minutes but no more than 35 minutes; swirl twice during the reaction period.
13	Remove the test strip and immediately compare the developed color to the chart on the test strip bottle.
14	Dispose of lab chemicals accordingly. Document testing and results on weekly Plant checklist.
Step	**Arsenic Quick II Test Strip Measurements (Weekly)**
1	Don PPE listed above.
2	Obtain water sample from desired location in treatment system. Plant effluent, between adsorbers, adsorber influent, and Plant influent should all be measured on a weekly basis.
3	Gently heat a water sample that is at least 100 mL via a hot plate and bath to a temperature between 22°C to 28°C (target temperature is 25°C).
3	Fill the reaction with the 25°C water sample to the marked line on the bottle (100 mL).
4	Add 3 level pink spoons of the First Reagent to the Reaction Bottle. Cap the bottle securely with black mixing cap and shake vigorously with bottle upright for 15 second.

5	Uncap the Reaction Bottle and add 3 level red spoons of the Second Reagent. Cap the bottle securely with black mixing cap and shake vigorously with bottle upright for 15 seconds.
6	Allow the sample to sit for 2 minutes.
7	While the test is incubating for 2 minutes, prepare the turret cap as follows (TURRET CAP MUST BE DRY): a) Open the packet and carefully remove the strip. While handling the strip, avoid touching the Mercuric Bromide testing pad at one end of the strip. b) Position either side of the testing pad over the orifice (see diagram on Quick II Test procedure document) and press down the turret handle over the pad until it locks into position on the cap. Make certain the red turret with handle is fully closed. The red turret should be pressed level with the top of the cap to ensure all gas passes through the testing pad. To confirm that the testing pad completely covers the hole in the cap, visually inspect the orifice from under the cap. The turret cap is now ready for use in Step 9.
8	Uncap the Reaction Bottle and add 3 level white spoons of the Third Reagent. Cap the bottle securely with black mixing cap and shake vigorously for 5 seconds.
9	Remove the black cap from the Reaction Bottle and recap securely using the turret cap within 20 seconds. As you screw on the turret cap, be careful not to splash the water or reagents on the testing pad. **It is important that the testing pad remains dry during the test.** Place the bottle in a well-ventilated area where it will not be disturbed. You should notice numerous small hydrogen gas bubbles generating from the Tartaric Acid and Zinc Dust Reagents.
10	Start the timer and wait for 10 minutes. Reaction generates small hydrogen gas bubbles
11	After waiting 10 minutes (but no longer than 12 minutes), pull the turret up. Carefully remove the test strip with the testing pad. Flatten the testing pad, if necessary, by gently pressing it between two clean pieces of paper. Use the Color Chart and match the color of the exposed side of the testing pad within the next 2 minutes (colors oxidize when exposed to light). For best color matching use natural daylight, but do not use direct sunlight. The color can be preserved for a short time by returning the testing pad to the packet and keeping it out of light.
12	Record your result on the *"Weekly Process Checklist."*
13	Dispose of lab chemicals accordingly.

7.0 FERROUS IRON MEASUREMENT

Critical Information

Ferrous iron is measured in the influent to the treatment plant to determine the amount of potassium permanganate dosed to the oxidation tank that needs to be increased or reduced based on the change in the influent inorganic oxidant demand (including iron, manganese, and arsenic). The procedure for Hach-kit iron testing can be found in the testing procedures box in the lab.

Personal Protective Equipment

Safety Glasses	Nitrile Gloves

Procedure

Step	Ferrous Iron Measurement (Weekly)
1	Obtain water sample from head tank sample port in treatment system. Ferrous Iron should be measured weekly at the Plant influent.
2	Select the test on the DR 3900 in the lab (255 Iron, Ferrous).
3	Fill a clean graduated mixing cylinder with a 5 mL water sample.
4	Add 20 mL of DI to the sample to form a 25 mL sample. Insert a stopper and repeatedly invert mixture for 15 seconds. Transfer 10 mL to clean mixing cylinder.
5	Add the contents of one Ferrous Iron Reagent pillow to the sample.
6	Insert a stopper to seal the cylinder and invert the cylinder to mix. Undissolved powder does not affect accuracy.
7	Start the timer on the lab bench for three minutes to allow for sufficient reaction time.
8	Fill a sample cell with a 10 mL sample containing only water collected from the head tank (creating a BLANK sample).
9	Fill a second sample cell with a 10 mL sample of fluid from the cylinder that was mixed and allowed enough time to have fully reacted (from step 7).
10	Insert the BLANK sample cell into the cell reader on the DR 3900. Zero the instrument. The display should read 0.00 Fe 2+.
11	Insert the prepared sample into the cell reader. Read the results in mg/L Fe 2+. Multiply the result by 5 and document the multiplied result on the weekly plant checklist.

8.0 TOTAL IRON MEASUREMENT

Critical Information

Total iron is measured in the influent to the treatment plant to determine the amount of potassium permanganate dosed to the oxidation tank that needs to be increased or reduced based on the change in the influent inorganic oxidant demand (including iron, manganese, and arsenic). Total iron is used to determine the amount of oxidized iron (ferric iron) in the influent to the plant. The procedure for Hach-kit iron testing can be found in the testing procedures box in the lab.

Personal Protective Equipment

Safety Glasses	Nitrile Gloves

Procedure

Step	Total Iron Measurement (Weekly)
1	Obtain water sample from the head tank sample port in treatment system. Total Iron should be measured weekly at the Plant influent.
2	Select the test on the DR 3900 in the lab (265 Iron, FerroVer).
3	Fill a clean graduated mixing cylinder with a 2 mL sample from the influent water to the plant.
4	Add 18 mL of DI to the sample to form a 20 mL sample. Insert a stopper and repeatedly invert mixture for 15 seconds. Transfer 10 mL to clean mixing cylinder.
5	Add the contents of one FerroVer pillow to the sample. Swirl to mix.
6	Insert a stopper to seal the cylinder and invert the cylinder to mix. Undissolved powder does not affect accuracy.
7	Start the timer on the lab bench for three minutes to allow for sufficient reaction time.
8	Fill a sample cell with a 10 mL sample containing only water collected from the head tank (creating a BLANK sample).
9	Fill a second sample cell with a 10 mL sample of fluid from the cylinder that was mixed and allowed enough time to have fully reacted (from step 7).
10	Insert the BLANK sample cell into the cell reader on the DR 3900. Zero the instrument. The display should read 0.00 Fe.
11	Insert the prepared sample into the cell reader. Read the results in mg/L Fe. Multiply the result by 10 and document the multiplied result on the weekly Plant checklist.

9.0 MANGANESE MEASUREMENT

Critical Information

Total manganese is measured in the influent to the treatment plant to determine the amount of potassium permanganate dosed to the oxidation tank that needs to be increased or reduced based on the change in the influent inorganic oxidant demand (including iron, manganese, and arsenic). The procedure for Hach-kit manganese testing can be found in the testing procedures box in the lab.

Personal Protective Equipment

Safety Glasses	Nitrile Gloves

Procedure

Step	Manganese Measurement (Weekly)
1	Obtain water sample from desired location in treatment system. Manganese should be sample at the Plant influent weekly.
2	Select the test on the DR 3900 in the lab (295 Manganese, HR).
3	Fill a clean graduated mixing cylinder with a 10 mL sample from the influent water to the plant.
4	Add the contents of one Buffer Powder Pillow (Citrate Type for Manganese) to the sample.
5	Insert a stopper to seal the cylinder and invert the cylinder to mix. Undissolved powder does not affect accuracy.
6	Add the contents of one Sodium Periodate Powder Pillow to the sample cell.
7	Insert a stopper to seal the cylinder and invert cylinder to mix. A violet color will develop if manganese is present.
8	Start the timer on the lab bench for two minutes to allow for sufficient reaction time.
9	Fill a sample cell with a 10 mL sample containing only DI and reagent (creating a reagent BLANK sample). Follow steps 4-8 above for reagent BLANK.
10	Insert the reagent BLANK sample cell into the cell reader on the DR 3900. Zero the instrument. The display should read 0.00 mg/L Mn.
11	Within eight minutes of the two minute timer expiring, insert the sample into the cell holder and. read the results in mg/L Mn. Document results on the weekly Plant checklist.

10.0 TSS MEASUREMENT

Critical Information	The procedure for the Hach-kit TSS testing can be found in the testing procedures box in the lab. TSS should be measured at the clarifier overflow, the bag filter influent and effluent, and the cartridge filter effluent weekly.

Personal Protective Equipment

Safety Glasses	Nitrile Gloves

Procedure

Step	TSS Measurement
1	Collect a grab sample of water from the clarifier overflow, the bag filter influent and effluent, and the cartridge filter effluent by opening the corresponding hand valve immediately upstream/downstream of the filters and filling a sample from the clarifier overflow.
2	For the clarifier overflow sample only, blend 500 mL of the grab sample in the onsite blender at high speed for exactly two minutes.
3	Pour the sample into a beaker.
4	Stir the sample and pour 10 mL into a sample cell.
5	Fill a second sample cell with 10 mL of DI water.
6	Select test 630 on the DR 3900. Wipe the outside walls of the blank cell to remove any debris and streaks. Insert the cell into the cell holder on the DR 3900. Zero the instrument. The display should read 0 mg/L TSS.
7	Swirl the prepared grab sample to remove any bubbles and to create a uniformly suspended mixture.
8	Fill a clean sample cell with 10 mL of the well mixed sample.
9	Wipe the outside walls of the sample cell to remove any debris and streaks. Insert the cell into the cell holder.
10	Press READ on the DR 3900 and document the results on the weekly Plant checklist.

11.0 NPDES SAMPLING AND MONITORING

Critical Information	The two explicit discharge limits on the B&L NPDES permit are for arsenic and pH. A printout of the NPDES permit is located in the building office. It must be updated when a new permit is issued by Ecology. The permit designates the required laboratory sampling that must be completed.

Personal Protective Equipment

Safety Glasses	Nitrile Gloves

Procedure

Step	NPDES Sampling and Monitoring
1	Analyses must be performed on a monthly basis to satisfy the NPDES permit requirements. For the B&L Woodwaste site, discharge limits are set for arsenic and pH. The sample location is on the plant effluent pipe, just downstream of the arsenic adsorption vessels. For weekly pH NPDES sampling in the plant effluent, see pH measurement procedure above.
2	The effluent sample will be collected as a 24-hour composite sample. The PLC interface is used to start and stop the sampling.
3	Press the “ON” button under the sampling diagram on the PLC to begin sampling. This button is found on the adsorption column page.
4	The solenoid valve open-close-purge settings should be set to produce a full 5 gallon carboy jug of water over a 24-hour period.
5	Press the “OFF” button on the PLC to stop sampling after the jug has been filling for one day. Thoroughly mix the jug contents thoroughly to ensure that the sample is well-mixed.
6	Pour the well mixed sample into the appropriate sample containers provided by an accredited lab for each Permit required analysis. Put the samples into an ice-filled cooler for preservation.
7	Bring the cooler to an accredited lab with a completed chain of custody (COC) document. The COC needs to be scanned and backed up on the office computer. A copy of the COC needs to be emailed to the process engineer as well. File the original COC in the office of the treatment plant.
8	The daily effluent flow (gallons per day) must be recorded and sent to the process engineer. The PLC records the daily effluent flow.
9	Monthly instantaneous minimum and maximum pH readings must be recorded. The PLC records the effluent pH on programmed specified intervals.
10	Acute and chronic toxicity testing must occur twice per year, using a 24-hour time composite sample. Refer to the NPDES permit for more details.
11	VOC, SVOC, and Pesticides/PCB testing must occur once per permit cycle. Refer to the NPDES permit for details.
12	All permit required sampling and analysis results and collection information must be maintained onsite in the office. Refer to the Permit and the Documentation and Record Keeping Procedures for more information on specific details required.

12.0 POTASSIUM PERMANGANATE SAMPLING

Critical Information	Potassium permanganate is measured in the potassium permanganate feed tank to determine the concentration of potassium permanganate being dosed to the oxidation tank. Depending on the concentration, the volumetric feed ratio needs to be adjusted to ensure that the target concentration in the oxidation tank is met.

Personal Protective Equipment

Safety Glasses	Nitrile Gloves

Procedure

Step	Potassium Permanganate Sampling
1	Set up work space in lab on top of lab secondary containment pan. No spills or chemicals can be placed in lab sink. Open the "*KMnO4 Testing Calcs.xlsx*" file (the Table) to set up sample quantities. The following steps reference the Table to complete this procedure.
2	Verify that the lab stock solution concentration is accurate in the Constants Table on the KMnO4 tab.
3	Use Table 1 on the KMnO4 tab to select an appropriate concentration range for the KMnO4 sample range. Use the cell path that corresponds to the widest detection range required. In most cases, a cell path of 1 cm is sufficient as it allows for a measurement from 0.5 mg/L to 100 mg/L.
4	Update the cuvette volume in the Constants Table on the KMnO4 tab based on the volume being used.
5	Use either Table 2a or Table 2b to calculate the stock and dilution volumes required to create 4 calibration standards. The 4 calibration standards should evenly span the concentration range selected from Table 1 in the Table. When creating calibration standards, use de-ionized or distilled water for the dilution water.
6	Table 2a calculates the concentration that results from various stock solution volumes assuming a total volume equal to the cuvette volume is created. Table 2a allows for a volume controlled approach.
7	Table 2b calculates the volume required of stock solution and dilution water to create a solution at the specified concentration. Table 2b allows for a concentration controlled approach. When using Table 2b ensure that level of accuracy for calculated volumes can be achieved in the lab onsite (if not adjust concentrations).
8	Take a blank sample in the cuvette (of DI or distilled water) and measure the absorbance for the cell path selected with the spectrophotometer. Input the resulting absorbance into the Constants Table in the KMnO4 tab.

9	Measure the absorbance of the 4 calibration standards using the same approach that was used in measuring the blank samples' absorbance and input the resulting values into Table 4 for the Measured Absorbance.
10	Look at calibration plot in the Calibration Curve tab and copy linear fit equation over to KMnO4 Log tab. Input M and B parameters (slope and y-intercept) into the table along with R squared.
11	Determine the target diluted concentration for the sample. Set the target dilution concentration to be in the middle of the calibration standard range selected. Input the target diluted concentration into Table 4 on the KMnO4 Tab.
12	Select a sample volume required to add to a dilution volume. Input the sample volume into Table 4. Use a sample volume that gives a reasonable dilution volume (given in Table 4) while allowing for an accurate sample collection volume with the lab supplies onsite.
13	Mix the diluted sample well and fill the cuvette with the well mixed diluted sample.
14	Measure the absorbance of the sample in the spectrophotometer and record in the KMnO4 Log tab table under sample absorbance.
15	Read the KMnO4 tank concentration from the table in the KMnO4 Log tab (right column). KMnO4 concentration should be at or below 35 g/L. If less than 35 g/L; update the volumetric dose ratio that feeds into the oxidation tank to provide the target concentration. If more than 35 g/L; dilute KMnO4 tank solution on a mass of water added basis. Consult with process engineer prior to making any changes to verify.
16	All lab calibration standards and samples can be dumped into the oxidation tank in the treatment process.

DOCUMENT TYPE: Standard Operating Procedure

TITLE: pH, EPA 150.1

INSTRUMENTATION: HACH EC10 pH Meter

PREPARED BY: Marshall K. Cheung, Ph.D., Laboratory Director _____

REVISED BY: Marshall K. Cheung, Ph.D., Laboratory Director _____

REVIEWED BY: Anne Cheung, Laboratory Manager _____

APPROVED BY: Marshall K. Cheung, Ph.D., Laboratory Director _____

Table of Contents

Document No.:	PP 0001 – 015
Copy provided to:	Marshall K. Cheung, Ph.D.
Title:	Laboratory Director
	29 Palms Laboratory
	47-250 Dillon Road
	Coachella, CA 92236
Copy provided by:	Marshall K. Cheung, Ph.D.
Title:	Laboratory Director
Date:	July 28, 2004

1. Scope and Application
   1.1. This method is applicable to the analysis of drinking, surface and saline waters, domestic and industrial wastes and acid rain (atmospheric deposition).
   1.2. It is applicable to field as well as laboratory analysis.

2. Summary of Method
   2.1. Instrument setup procedure is followed.
   2.2. The meter is calibrated using certified standards.
   2.3. The calibration is verified with an independent certified standard (initial calibration verification).
   2.4. The pH of a sample is determined electrometrically using a combination electrode.
   2.5. Continuing calibration verification is carried out using the independent certified standard.

3. Sample Handling and Preservation
   3.1. Samples should be analyzed as soon as possible preferably in the field at the time of sampling.
   3.2. The sample containers should be filled completely and kept sealed prior to analysis because high-purity waters and waters not at equilibrium with the atmosphere are subject to changes when exposed to the atmosphere.
   3.3. Stable pH, conductivity and temperature conditions must be demonstrated prior to groundwater sample collection (see SOP #SP002- Groundwater Sampling).

4. Interferences
   4.1. The glass electrode, in general, is not subject to solution interferences from color, turbidity, colloidal matter, oxidants, reductants or high salinity.
   4.2. Coatings of oily material or particulate matter can impair electrode response. Gentle wiping or detergent washing, followed by distilled water rinsing can usually remove these coatings. An additional treatment with hydrochloric acid (1 + 9) may be necessary to remove remaining film.
   4.3. Variation in temperature causes pH values to differ. This interference can be controlled with instruments having temperature compensation or by calibrating the electrode-instrument system at the temperature of the samples.
   4.4. If compensation or calibration at the same temperature is not possible, it should be noted by reporting both the pH and the temperature at the time of analysis.

5. Apparatus
   5.1. HACH EC10 Portable pH/mV/Temperature Meter - Model 50050
   5.2. HACH One Combination pH Electrode - Model 48600-22
   5.3. Magnetic stirrer and Teflon-coated stirring bar (for lab analysis)

6. Reagents/Supplies
   6.1. VWR pH 7.00 Buffer Solution Yellow (Cat. No. 34170-130)
   6.2. VWR pH 7.00 Buffer Solution Yellow (Cat. No. 34170-130)-different lot
   6.3. VWR pH 4.00 Buffer Solution Red (Cat. No. 34170-127)
   6.4. VWR pH 10.00 Buffer Solution Blue (Cat. No. 34170-133)
   6.5. Ricca Deionized Water (Cat. No. 9150-5)
   6.6. Kimberly-Clark Kimwipes EX-L (Cat. No. 34120)

7. Procedure

7.1. Instrument Setup (Refer to HACH EC10 Manual)

7.1.1. Power-up and Self-Diagnostics Checkout

7.1.1.1. Disconnect the electrode and temperature probe from the meter.

7.1.1.2. Attach BNC shorting cap to the BNC connection on the meter.

7.1.1.3. Press the I/O key to turn the instrument on.

7.1.1.4. Install new 9V battery when low battery indicator appears on the display.

7.1.1.5. Press I/O key to turn the meter off.

7.1.1.6. Press and hold the YES key while pressing the I/O key.

7.1.1.6.1. The instrument automatically performs electronic and hardware diagnostic tests, and a system countdown will display 1-8.

7.1.1.6.2. The meter will stop on test 7.

7.1.1.7. When "0" is displayed, press each key (including the I/O key) within 10 seconds to complete this test.

7.1.1.7.1. The numeric digits will change.

7.1.1.7.2. If all keys are not pressed within 10 seconds, or if a key is not responding properly, E-7 will appear.

7.1.1.7.3. If problems are found during self-test, the meter will display the error code until YES is pressed.

7.1.1.7.4. If there is an error, begin Power-up and Self-Diagnostics Checkout again (7.1.1).

7.1.1.7.5. Refer to Table 2 Error Codes on page 19 of the instrument manual.

7.1.1.8. After the keypad test (7), the meter will display test 8 and then the meter will turn off.

7.1.1.9. Make sure that the BNC shorting cap is securely attached to the BNC connection of the meter and then press the I/O key. The meter will be in the MEASURE mode as indicated on the display.

7.1.1.10. Press the MODE key until the pH mode indicator is displayed.

7.1.1.11. Press the CAL key.

7.1.1.12. When the display flashes 7.00, press the YES key.

7.1.1.13. Press the MODE key. The current slope (SLP) will be displayed.

7.1.1.14. Press the YES key.

7.1.1.15. The meter advances to MEASURE and reads a steady 7.00.

7.1.1.16. Turn meter off.

7.1.1.17. Remove the BNC shorting cap from the input connector.

7.1.2. Install the HACH One combination pH electrode.

7.1.2.1. Attach the BNC connector of the electrode to the BNC connection of the pH meter.

7.1.2.2. Attach the ATC/DIN Connector of the electrode to the ATC/DIN connection of the pH Meter.

7.1.3. Thoroughly rinse electrode with deionized water.

7.1.4. Blot with Kimwipe.

7.1.5. Instrument is ready for calibration.

7.2. Instrument Calibration

7.2.1. Allow standard pH buffer solutions to equilibrate to room temperature (20-30° C).
7.2.2. Turn the pH meter on.
7.2.3. Using the MODE key, set the meter to "pH" mode.
7.2.4. Depress the dispenser button on the electrode until a "click" is heard, then release.
7.2.4.1. Repeat until electrolyte gel emerges from the reference outlet (See Model 48600 HACH One Combination pH Electrode Instruction Manual).
7.2.4.1.1. If no gel emerges, the hole may need to be unplugged with a needle.
7.2.4.1.2. If this does not help, the gel unit may need to be replaced if low.
7.2.4.2. Rinse the electrode with deionized water and blot dry with Kimwipe.
7.2.5. Place the pH electrode into 7.00 buffer solution (Yellow).
7.2.5.1. Make sure that the electrode tip is at least 1 inch below the surface of the solution.
7.2.5.1.1. If access to magnetic stirrer is available, place clean magnetic stir rod into buffer solution.
7.2.5.1.2. Wait for reading to stabilize while stirring on magnetic stirrer.
7.2.5.1.3. If not magnetic stirrer is used, gently agitate probe in buffer manually.
7.2.6. Press the CAL key.
7.2.7. P1 will be displayed under pH reading.
7.2.8. Wait until "ready" is displayed and then press the YES key.
7.2.9. Remove electrode, rinse with deionized water and blot dry with Kimwipe.
7.2.10. Click electrolyte pump button two (2) times.
7.2.11. Place electrode into either 4.00 or 10.00 buffer solution depending on the expected pH range of the sample to be measured.
7.2.11.1. If expected pH range of the sample is greater than 7.00, use the 10.00 buffer (Blue).
7.2.11.2. If the expected pH range of the sample is less than 7.00, use the 4.00 buffer (Red).
7.2.12. Make sure that the electrode tip is at least 1" below the surface of the solution.
7.2.12.1. If access to magnetic stirrer is available, place clean magnetic stir rod into buffer solution.
7.2.12.2. Wait for reading to stabilize while stirring on magnetic stirrer.
7.2.12.3. If no magnetic stirrer is used, gently agitate probe in buffer manually.
7.2.13. Wait until "ready" is displayed and then press the YES key.
7.2.14. Slope is displayed. Record slope in HACH ph Meter Log, Logbook #30 A.
7.2.15. Remove electrode, rinse with deionized water and blot dry with Kimwipe.
7.2.16. Click electrolyte pump button two (2) times.
7.2.17. Take pH of a second standard pH 7.0 buffer as a calibration check (initial calibration verification-ICV).
7.2.17.1. If pH is within 0.05 pH units of the expected value (acceptable precision), calibration is verified. Proceed to 7.2.6.6.
7.2.17.2. If pH is outside this range, reread pH of calibration check standard.
7.2.17.3. If pH is within range, proceed to 7.2.6.6.
7.2.17.4. If pH is still outside range, reread fresh buffer standard.
7.2.17.5. If pH is outside range, recalibrate (7.2).

7.2.18. Retake pH of calibration standards and record reading for each in HACH pH Meter Log, Logbook #30 A.

7.2.19. Dispense gel electrolyte if the reading becomes unstable, erratic, or if stabilization takes too long (greater than two minutes).

7.3. Take sample measurements.

7.3.1. For laboratory analyses, allow samples and buffer solutions to come to room temperature (20 – 30°C).

7.3.2. Thoroughly rinse pH electrode with deionized water and blot dry with Kimwipe.

7.3.3. Insert rinsed and dried electrode into the sample.

7.3.4. Record the pH value and the temperature of samples in appropriate bound logbook (Surface Water Monitoring Log, Logbook #21 A, or Groundwater Monitoring Log, Logbook #13 A).

7.3.5. Analyze a calibration check standard (continuing calibration verification- CCV) with every ten samples to re-check the validity of the calibration curve.

7.3.5.1. If the CCV is within 0.05 of the expected value, continue with sample analysis.

7.3.5.2. If the CCV differs by more than 0.05, follow the steps below.

7.3.5.2.1. If the CCV does not come within 0.05 of the expected value, then the calibration check standard should first be reread.

7.3.5.2.2. If the repeat analysis result still differs by greater than 0.05, a fresh calibration check standard should be read.

7.3.5.2.3. If this calibration check standard does not meet the criteria, a new calibration must be performed and all samples analyzed since the last valid calibration must be rerun.

8. Calculation

8.1. The pH meter reads directly in pH units. Report pH to the nearest 0.01 unit and the temperature to the nearest 0.1^{o}C.

9. Bibliography

9.1. HACH EC10 Portable pH/mV/Temperature Meter Model 50050 Manual.

9.2. Model 48600 HACH One Combination pH Electrode Instruction Manual.

9.3. EPA Method 150.1.

9.4. Standard Methods for the Examination of Water and Wastewater, 20th Edition, Method No. 4500-H+, p 4-87, (1998).

STANDARD OPERATION PROCEDURES:
B&L WOODWASTE GROUNDWATER TREATMENT SYSTEM
PROCEDURE P020 - ROUTINE MAINTENANCE
B&L Woodwaste Landfill
Milton, Washington

OPERATION PROCEDURES, GENERAL OVERVIEW

Introduction

This procedure outlines routine maintenance for the groundwater treatment system at the B&L Woodwaste Site. Routine maintenance must be performed to ensure that the plant will operate smoothly without unexpected interruptions. Each piece of equipment used in the treatment process is discussed in more detail in their respective procedure write-ups. This procedure only outlines general routine maintenance items that are used in nearly all of the treatment plant components such as piping, valves, tubing, security and containment.

Pre-requisites to Do This Procedure

To do this procedure you must:

- Be fully trained for treatment system operations or be training in the area with someone who has been fully trained.
- Be fully trained for handling and management of dangerous wastes.
- Be familiar with all aspects of this operating procedure.
- Be Hazardous Waste Operations (HAZWOPER)-trained and current with annual training updates.

In This Procedure

Following is a list of topics in this Procedure:

1.0 SAFETY CONSIDERATIONS

Health and Safety Plan (HASP)	The most recent version of the HASP is maintained in the treatment building office and provides plans and requirements to protect the health and safety of workers involved in the operation and maintenance of the groundwater extraction and treatment system. All workers must be familiar with and sign the HASP. Specific requirements for Personal Protective Equipment (PPE) are included in the HASP. If there are any discrepancies between PPE requirements included in these procedures and PPE requirements specified in the HASP, the requirements specified in the HASP shall be followed.
Level of Hazard	**Medium** Hazards associated with routine maintenance vary depending on the specific task. Hazards may include electrical, stored energy in the form of pressurized water, chemical exposure, and contaminated ground water. More details of the hazards present for each task is discussed in more detail in the procedure write up for the specific task. Due to the presence of dangerous waste within the closed landfill, all personnel working at the site must be fully trained in accordance with 29 CFR 1910 and WISHA regulations. Forty-hour HAZWOPER training with yearly eight hour refresher training is required for anyone performing work at the B&L Woodwaste Site. Pumps within the system add pressure to piping, so care should always be used when working around the equipment. Never block a pressure throughway by closing a valve without first turning off the corresponding system.

2.0 PIPING AND VALVE MAINTENANCE

Critical Information

The majority of piping and valves onsite are 2 inch schedule 80 PVC with the exception of the plant effluent piping, which is 3 inch schedule 80 PVC. In addition, the majority of valves onsite are true union type valves, allowing for the valves to be removed using only a strap wrench. Although PVC does not rust or corrode, some biological or chemical fouling of the system may occur; requiring some routine operation of the valves and piping.

Monitoring of system flow, pressure, and pumping cycles in combination with piping and valve surface inspection for visual signs of leaks will allow for early detection of leaks.

All problems should be reported on a maintenance resolution/inspection form and reported to the system engineer.

Tools/Supplies

Strap wrench	Screwdrivers

Personal Protective Equipment

Safety Glasses	Nitrile Gloves

Procedure

Step	Piping Maintenance
1	Above ground piping in the groundwater treatment building should be inspected on a monthly basis, per the monthly checklist (see the Documentation and Record Keeping Procedure).
2	Piping in the extraction well monuments and subsurface piping should be checked on a quarterly basis, per the quarterly checklist (see the Documentation and Record Keeping Procedure) and the recovery well inspection log needs to be filled out (see the Documentation and Record Keeping Procedure). The piping in the monuments should also be inspected for cracks and leaks with the extraction well pump operating.
3	Air/Vacuum relief valves located throughout the landfill (See Drawing C-04) need to be inspected on a monthly basis to ensure valves are functioning properly. Valves may need to be cleaned.
4	Piping that feeds into the head tank at the beginning of the treatment process needs to be visually inspected weekly and cleaned out as required as iron precipitates may form around the pipe wall sides and eventually constrict the flow. A semiannual cleaning is required at a minimum to ensure that the pipe does not begin to clog flow.

5	Piping that runs from the head tank to the oxidation tank needs to be visually inspected weekly and cleaned out as required as iron precipitates may form around the pipe wall sides and eventually constrict the flow. A semiannual cleaning is required at a minimum to ensure that the pipe does not begin to clog flow.
6	The pipe that runs in between the oxidation tank and the co-precipitation tank needs to be inspected weekly and cleaned out semiannually at a minimum as sediments, iron precipitates, and biological sludge may begin to accumulate in the pipe.
7	Anything unusual should be noted and reported to the system engineer. Pictures should be taken documenting any problems observed by the site operator.

Procedure

Step	Valve Maintenance and Troubleshooting
1	For routine operations, most valves are kept either normally open or normally closed.
2	During the semiannual system inspection, the extraction wells should be turned to off, per the standard shutdown procedure.
3	All valves should then be opened and closed once or twice to check for normal operation.
Problems	**Resolutions**
Stuck Check Valve	Turn off system extraction well pumps. Close ball valves upstream and downstream of check valve if possible. Use a strap wrench to unscrew the valve and unseat the ball. Clean washers and replace.

3.0 FLOWMETER MAINTENANCE

Critical Information

There are two different types of flowmeters on the B&L woodwaste site. There are 21 turbine flowmeters are located near the top of well casings for each of the recovery wells (type GP2 ½" turbine flowmeter). There are two Magmeter flowmeters. One measures the influent flow to the treatment process downstream of the head tank and the second measures the effluent flow downstream of the final adsorption column just prior to the discharge from the groundwater treatment building.

Preventative maintenance is required to be performed on all 21 turbine type flowmeters and the 2 Magmeter flowmeters to ensure the quality of data.

Tools/Supplies

Wrench	Batteries
Screwdrivers	

Personal Protective Equipment

Safety Glasses	Nitrile Gloves
	Steel Toe Boots (Leather or Rubber)

Procedure

Step	Magmeter Flowmeters (Semiannually)
1	There are two Magmeter flowmeters onsite that measure the influent and effluent flows. Magmeter flowmeters shall be inspected semiannually for any clogs, chemical, or biological accumulation or for any damage.
2	Contact the Magmeter manufacturer for assistance with any damaged or malfunctioning flow meters.

4.0 GENERAL SITE HOUSEKEEPING

Critical Information

Good housekeeping practices will keep the B&L water treatment system operating smoothly and efficiently. Site operators should keep the facility clean and orderly at all times. All actions and maintenance should be documented and stored neatly for future reference.

Procedure

Step	Housekeeping
1	Trash shall be thrown into the onsite roll-off as soon as waste receptacles are full.
2	The onsite roll-off shall be emptied as soon as it is approximately 60% full to ensure that there is sufficient room for media change out super sacks.
3	Onsite security shall be enforced at all times. The gates and treatment building doors shall remain locked whenever there is no one present onsite. The security cameras shall remain functional.

5.0 LANDFILL INSPECTION & MAINTENANCE

Critical Information

The landfill should be inspected at a minimum, monthly, to ensure that there are no visual problems or faults with the landfill pump vaults, any of the kiosks, or the discharge ponds. In addition, all well vault bolts should be inspected at the same time.

Personal Protective Equipment

Safety Glasses	Steel Toe Boots (Rubber or Leather)

Procedure

Step	Landfill Inspection
1	Check for any visible damage on the covers of all of the kiosks and well vaults. Visually inspect the inside of the well vaults and the well vault bolts at the same time. See corresponding procedure in this manual. Check all CU-300s in kiosks to verify they are in operation. Fill out the *"Recovery Well Table"* Included in Procedures 001.
2	Check the treatment system effluent outfalls to make sure there has been no erosion or pipe wear.
3	Ensure that the gravel road around the landfill is in good condition.

6.0 SECURITY/FENCE INSPECTION & MAINTENANCE

Critical Information

All of The site fencing and security objects on site should be inspected on a monthly basis. Security objects include all kiosk locks, gate locks, security alarms, and security cameras, should be checked on a monthly basis.

Personal Protective Equipment

Safety Glasses	Hard Hat
	Steel Toe Boots (Rubber or Leather)

Procedure

Step	Fence/Security Inspection and Maintenance
1	Do a visual fence perimeter inspection; checking all gate locks and gate alarms on the way. Make sure that all gates are tightly shut and there is no visual damage in the fencing or barbed wire.
2	Check that security cameras have not been tampered with and are operational.
3	Check light on entry gate when arming and disarming site alarm. It should blink red when armed and green when disarmed.

4	Check kiosk shrouds and handles for any signs of damage. Locks should be in place inside of the metal shrouds.
5	Check well vault bolts to make sure they have not been tampered with.

STANDARD OPERATION PROCEDURE:
B&L WOODWASTE GROUNDWATER TREATMENT SYSTEM
PROCEDURE P050 - NORMAL STARTUP AND SHUTDOWN
B&L Woodwaste Landfill
Milton, Washington

OPERATION PROCEDURES, GENERAL OVERVIEW

Introduction

This procedure outlines operational procedures for the normal startup and shutdown of the B&L Woodwaste groundwater treatment system. Also included in this procedure are checklists that are meant to be used as a guide for startup, shut down, and simplified troubleshooting and startup process control.

Pre-requisites to Do This Procedure

To do this procedure you must:

- Be fully trained for treatment system operations or be training in the area with someone who has been fully trained.
- Be fully trained for handling and management of dangerous wastes.
- Be familiar with all aspects of this operating procedure.
- Be Hazardous Waste Operations (HAZWOPER)-trained and current with annual training updates.

In This Procedure

Following is a list of topics in this Procedure:

1.0 SAFETY CONSIDERATIONS

Health and Safety Plan (HASP)

The HASP maintained in the treatment building provides plans and requirements to protect the health and safety of workers involved in the operation and maintenance of the groundwater extraction and treatment system. All workers must be familiar with and sign the HASP. Specific requirements for Personal Protective Equipment (PPE) are included in the HASP. If there are any discrepancies between PPE requirements included in these procedures and PPE requirements specified in the HASP, the requirements specified in the HASP shall be followed.

Level of Hazard	**Low** Due to the presence of Dangerous Waste within the closed landfill, all personnel working at the site must be fully trained in accordance with 29 CFR 1910 and WISHA regulations. Forty-hour Hazardous Waste Operations Training with yearly eight hour refresher training is required for anyone performing work at the B&L Woodwaste Site.

2.0 NORMAL STARTUP AND SHUTDOWN

Critical Information	Procedure for normal startup and shutdown of the B&L Woodwaste groundwater treatment system.

Personal Protective Equipment

Safety Glasses	Steel-Toed Boots

Procedure

Step	Normal Startup
1	Confirm that no personnel are working on any parts of the system and that the system is safe to start up. Check the "*Startup Checklist*" to follow startup process checks and requirements during system startup. The Startup Checklist is attached to this procedure. For troubleshooting process issues that may arise, review the "*Troubleshooting Checklist*" form that is attached and go to the procedure that corresponds with the problem.
2	Confirm that there is sufficient lime, liquid permanganate, coagulant, acid, and polymer present.
3	Confirm that seal water to effluent pumps and polymer dosing pumps is on.
4	Confirm that all process mixers are operating.
5	Confirm that sludge tank is below the "high-high" level and that the clarifier underflow pump timer is set to an appropriate value to discharge sludge to the sludge tank.
6	Confirm that no process variables are out of range (in alarm).
7	Press the "Alarm Reset" button on the PLC.

8	Check the ORP in the oxidation tank. If it is more than approximately 100 mV below the ORP target (check tracking board in office), then over several minutes change the ORP dosing ratio to an intermediate value, and slowly “walk” the measured value to the setpoint. This will avoid an overshoot. Once the measured value is near the target ORP, confirm that the dosing ratio is set and the ORP is stable.
9	Check pH adjust tank measured pH. If it is more than approximately 0.5 units above the pH setpoint (6.2), then over several minutes change the pH setpoint to an intermediate value, and slowly “walk” the measured value to the setpoint. This will avoid an overshoot. Once the measured value is near a pH of 6.2, confirm that the setpoint is set at 6.2.
10	Check coprecip tank measured pH. If it is more or less than approximately 0.5 units below the pH setpoint (9.2), then over approximately an hour change the pH setpoint to an intermediate value, and slowly “walk” the measured value to the setpoint. This will avoid an overshoot. Once the measured value is near a pH of 9.2, confirm that the setpoint is set at 9.2. Once the measured pH is between the “low” and “high” alarm levels, proceed to the next step, but maintain vigilance of the coprecip tank pH level until it has settled in to the setpoint to avoid an overshoot. Note that the coprecip tank pH control loop acts very slowly, over the course of hours, as lime takes a long time to dissolve – it is easy to overshoot with this control loop and get a higher than optimal pH level in the coprecip tank.
11	Start the well pumps on the PLC. Confirm that the well pumps start up and flow into the head tank commences.
12	Monitor the system to ensure that all process variables stabilize within their normal ranges. Check the most recent version for the system setpoints given by the process engineer. The “*Typical Setpoints Checklist*” form is attached to this procedure.

Procedure

Step	Normal Shutdown
1	Review “*Shutdown Checklist*” form to ensure that all steps are understood. Shut off the well pumps on the PLC.
2	If shutdown will be longer than approximately 1 day, pump the polymer storage tank to the sludge tank, as mixed polymer solution has a limited lifespan.
3	The system will “coast” down as flowrate through the system diminishes. After a period of time, the levels in all the tanks will be static, the chemical feed pumps will not feed any more chemicals, and the effluent pumps will not pump any more water to the outfall.
4	Confirm that coprecip tank measured pH is at or above its pH setpoint, then flush lime tubing with water.

5	Shut the process water solenoid valve on the PLC to shut off pump seal water, which otherwise would be flowing into the plant sump and into the pH adjust tank.

Startup Checklist

B&L Woodwaste Site
Pierce County, Washington

_____ Confirm that there is sufficient lime, liquid permanganate, coagulant, acid and polymer present.

_____ Confirm that sludge tank is below high-high.

_____ Confirm that process water flow is on, if off then click "Force" button on first PLC screen.

_____ Confirm that seal water to effluent pumps is on.

_____ Confirm that seal water to polymer pumps is on.

_____ Confirm that all process mixers are operating.

_____ Confirm that all process parameters are within the low-low to high-high limits. If not, change limits temporarily to allow plant to start.

_____ Press "Alarm Reset" button on PLC. This will allow the PLC to start up the plant.

_____ Check oxidation tank measured ORP vs the target identified on the office board.

If ORP difference is approximately 100 mV or more, change setpoints over several minutes to slowly "walk" the measured ORP to the target value, without significantly overshooting.

_____ Check pH adjust tank measured pH vs the setpoint.

If pH difference is approximately 0.5 or more, change setpoints over several minutes to slowly "walk" the measured pH to the target value, without significantly overshooting.

_____ Check coprecipitation tank measured pH vs the setpoint.
If pH difference is approximately 0.5 or more, change setpoints over approximately 2 hours to slowly "walk" the measured pH to the target value, without significantly overshooting.

Note that the lime control loop is much slower to react than the acid control loop, as lime takes much longer to dissolve. It is very easy to overshoot with this pH control loop.

_____ To confirm that process is stable, check measurements vs setpoints.

_____ Ensure that any alarm setpoints and the autodialer is turned back on.

Troubleshooting Checklist

B&L Woodwaste Site
Pierce County, Washington

Problem	Possible Diagnosis
High head tank level	
	_____ Clog in effluent line
	_____ High flowrate from wells
	_____ Failure of head tank level switch
Low ORP in oxidation tank	
	_____ Low conc of KMnO4
	_____ KMnO4 feed pump failure
	_____ Higher oxidant demand
	_____ Failed ORP probe
	_____ KMnO4 tank empty
	_____ Failure of ox tank agitator
High ORP in oxidation tank	
	_____ Overconcentrated KMnO4 in storage tank
	_____ High pumping rate/lower oxidant demand
	_____ Failed ORP probe
	_____ Failure of ox tank agitator
Low pH in coprecip tank	
	_____ pH loop overshoot
	_____ Failed pH sensor
	_____ Clog in lime tubing
	_____ Lime pump failure
	_____ Lime tank empty
	_____ Failure of coprecip tank agitator
High pH in coprecip tank	
	_____ Failed pH sensor
	_____ Pump in manual
	_____ pH loop overshoot (very common upon startup even during proper operation)
	_____ Failure of coprecip tank agitator

Troubleshooting Checklist

B&L Woodwaste Site
Pierce County, Washington

Problem	Possible Diagnosis
Muddy water in floc tank	
	_____ Polymer dosing pump failure / underdose
	_____ Polymer makedown skid failure
	_____ Coagulant system failure / under or overdose
	_____ Change in influent water quality
	_____ Sludge recirculation failure
Purple water at clarifier overflow	
	_____ Permanganate overdose (see "High ORP in oxidation tank" entry)
	_____ Low oxidant demand in incoming water
Cloudy water at clarifier overflow	
	_____ See "Muddy Water in floc tank" entry
	_____ High or low pH in coprecip tank
	_____ Low ORP in oxidation tank
	_____ Failure of sludge pump
	_____ Failure of air system
	_____ Incorrect sludge pump timer settings
High pH in pH adjust tank	
	_____ Failure of acid pump
	_____ Acid tote empty
	_____ Failure of pH sensor in pH adjust tank
	_____ pH adjust tank water level below agitator

Typical Setpoints Checklist

B&L Woodwaste Site
Pierce County, Washington

_____ Permanganate dosing ratio (aim to keep ORP between 600-650)

_____ Coagulant dosing ratio

_____ Coprecipitation tank pH setpoint

_____ Polymer dosing ratio

_____ pH adjust tank pH setpoint

_____ Sludge pump timer on/off (see clarifier procedure for more information)

_____ Sludge to sludge tank/coprecip tank (approx 1 to sludge tank, 6 to coprecip)

Shutdown Checklist

B&L Woodwaste Site
Pierce County, Washington

_____ Shut off wells using PLC.

_____ If shutoff will be for >1 day, pump polymer storage tank to sludge tank.

_____ Wait until coprecip tank is at or above its pH setpoint, flush lime tubing with clean water.

_____ Confirm that process water shutoff solenoid is closed.

_____ Confirm that head tank flowmeter reads zero.

_____ Confirm that sludge pump to sludge tank timer is off.

_____ Confirm that there is no inflow into the plant sump.

STANDARD OPERATION PROCEDURE:
B&L WOODWASTE GROUNDWATER TREATMENT SYSTEM
PROCEDURE P100 - HEAD TANK & OXIDATION TANK
B&L Woodwaste Landfill
Milton, Washington

OPERATION PROCEDURES, GENERAL OVERVIEW

Introduction

This procedure outlines operational procedures for the head tank and oxidation tank in the groundwater treatment system at the B&L Woodwaste Site. The head tank is the receiving tank for water pumped from the landfill and wetland wells. Untreated water is gravity fed from the head tank into the oxidation tank, where the water is dosed with a potassium permanganate solution, which oxidizes the iron and arsenic to aid in co-precipitation of the iron with the arsenic in the co-precipitation tank.

Pre-requisites to Do This Procedure

To do this procedure you must:

- Be fully trained for treatment system operations or be training in the area with someone who has been fully trained.
- Be fully trained for handling and management of dangerous wastes.
- Be familiar with all aspects of this operating procedure.
- Be Hazardous Waste Operations (HAZWOPER)-trained and current with annual training updates.

In This Procedure

Following is a list of topics in this Procedure:

1.0 SAFETY CONSIDERATIONS

Health and Safety Plan (HASP)	The most recent version of the HASP is maintained in the treatment building office and provides plans and requirements to protect the health and safety of workers involved in the operation and maintenance of the groundwater extraction and treatment system. All workers must be familiar with and sign the HASP. Specific requirements for Personal Protective Equipment (PPE) are included in the HASP. If there are any discrepancies between PPE requirements included in these procedures and PPE requirements specified in the HASP, the requirements specified in the HASP shall be followed.
Level of Hazard	**Low** Hazards associated with this task include handling contaminated sludge and water that contains arsenic. Other hazards include stored energy in the cartridge filter units in the form of high pressure that needs to be relieved prior to any servicing of the filter units. When servicing both filter units, the effluent pumps need to be shut off, locked out, and tagged out prior to performing services on the filter units. The filters will contain groundwater contaminants so appropriate PPE must be worn as defined in the HASP. Due to the presence of dangerous waste within the closed landfill, all personnel working at the site must be fully trained in accordance with 29 CFR 1910 and WISHA regulations. Forty-hour HAZWOPER training with yearly eight hour refresher training is required for anyone performing work at the B&L Woodwaste Site.

2.0 HEAD TANK STARTUP & SHUTDOWN

Critical Information

The head tank collects water pumped from inside the landfill and from areas outside the landfill associated with high arsenic concentrations. The head tank, which is primarily a flow equalization tank, then discharges the water into the oxidation tank by gravity for treatment.

Procedure

Step	Normal Startup
1	The manual gate valve downstream of the head tank needs to be fully opened in order for the tank to drain prior to recovery well startup.
2	When the well pumps are initially started up, verify that water is entering the head tank from the well pumps by visually inspecting the influent line into the tank.

Procedure

Step	Normal Shutdown
1	When the recovery well pumps are shut off, the head tank will continue to drain to the oxidation tank until the water level reaches the outflow level.

Procedure

Step	Operation and Maintenance
1	If the water level in the head tank backs up and triggers the high level float switch in the tank (as indicated by a PLC alarm), clean out the head tank effluent line by running a pipe snake through the line.

3.0 OXIDATION TANK STARTUP & SHUTDOWN

Critical Information

The oxidation tank is dosed with a potassium permanganate solution to oxidize the organic carbon, iron, manganese, and arsenic in the influent ground water. The potassium permanganate is added to the oxidation tank automatically when there is flow through the influent flow meter (FIT-100) at a rate proportional to the influent flow.

Procedure

Step	Normal Startup
1	The oxidation tank mixer should be spinning when the system is turned on. If the mixer is not spinning, press “reset alarms” on the PLC.

2	When the head tank has filled up to the outflow level (if emptied out), verify that water flows out of the head tank into the oxidation tank by visually inspecting the effluent of the line feeding into the oxidation tank.

Procedure

Step	Normal Shutdown
1	The flow of potassium permanganate to the oxidation tank will automatically cease when there is no flow through the influent flow meter or when the dosing system is manually shut down.

4.0 MIXER OPERATION

Critical Information

The mixer in the oxidation tank ensures thorough mixing of the potassium permanganate feed solution with the influent ground water fully oxidize the iron, manganese, and arsenic in the influent ground water.

Personal Protective Equipment

Safety Glasses	Nitrile Gloves
Steel Toe Boots (Leather or Rubber)	Steel Toe Boots (Leather or Rubber)

Procedure

Step	Oxidation Tank Mixer Inspection and Maintenance - 6 Month Inspection
1	While the mixer is running, inspect the mixer for unusual sounds, excessive vibration, excessive heat, or any grease leakage. If any of these observations are made, stop the mixer and diagnose the problem and fix the problem if possible.
2	Turn off the propeller during the six month inspection and visually inspect the propeller for evidence of corrosion or other damage.
3	During the six month inspection, check for loose hardware. If required, re-torque the mixers' bolts securing the hardware to the original specifications (Torque value dependent on bolt size as given in the PMSL PV-2 instruction manual).
4	If there is an extended shutdown, run the mixer for approximately 10 minutes once a week to ensure that a coat of grease is distributed among the gears and bearings to prevent rust due to moisture condensation.

5.0 ORP METER OPERATION AND MAINTENANCE

Critical Information

The oxidation-reduction potential (ORP) transmitter measures the ORP in the oxidation tank. The ORP transmitter output must be calibrated annually to ensure quality of data. In addition, the sensor must be cleaned every 48-72 hrs and the sensor must be calibrated and conditioned weekly. If the sensor is suspected of being the source of erroneous readings, a visual inspection of the ORP sensor may identify the problem. In addition, a lab measurement for the ORP of the oxidation tank taken at the time of the ORP transmitter reading may be used to determine if the ORP transmitter needs to be calibrated or serviced.

Tools/Supplies

Digital Multi-Meter (DMM)	Bladed Screwdrivers (Small and Large)

Personal Protective Equipment

Safety Glasses	Nitrile Gloves
	Steel Toe Boots (Leather or Rubber)

Procedure

Step	Calibrate ORP Transmitter Output (Annually)
1	Use the bladed screwdriver to loosen the four captive screws that secure the rear cover to the transmitter.
2	Use the small bladed screwdriver to remove the shorting jumper from the test terminals, TB1-3 (+) and TB1-4 (-), as shown in Figure 1.
3	Connect the DMM to the TEST terminals, TB1-3 (+) and TB1-4 (-). Set the DMM to measure mA.
4	Press the NEXT smart key until CALIBRATE is highlighted on the display.
5	Press the SELECT smart key to enter calibration mode.
6	Press the NEXT smart key until OUT.CAL appears on the display.
7	Press the SELECT smart key to start the output calibration procedure.
8	Use the up and down smart keys to adjust the output so that the DMM reads 4.0 mA.
9	Press the ENTER smart key to enter the corresponding new value as read on the transmitter and proceed to the 20-mA output.
11	Use the up and down smart keys to adjust the output so that the DMM reads 20.0 mA.

12	Press the ENTER smart key to enter the new value as read on the transmitter. The transmitter then returns to the output calibrate state. NOTE: Once the output level has been permanently stored using the ENTER smart key, the output calibration procedure must be repeated to rectify a bad calibration.
13	Press the EXIT TO MEASURE smart key to return to the measure mode.

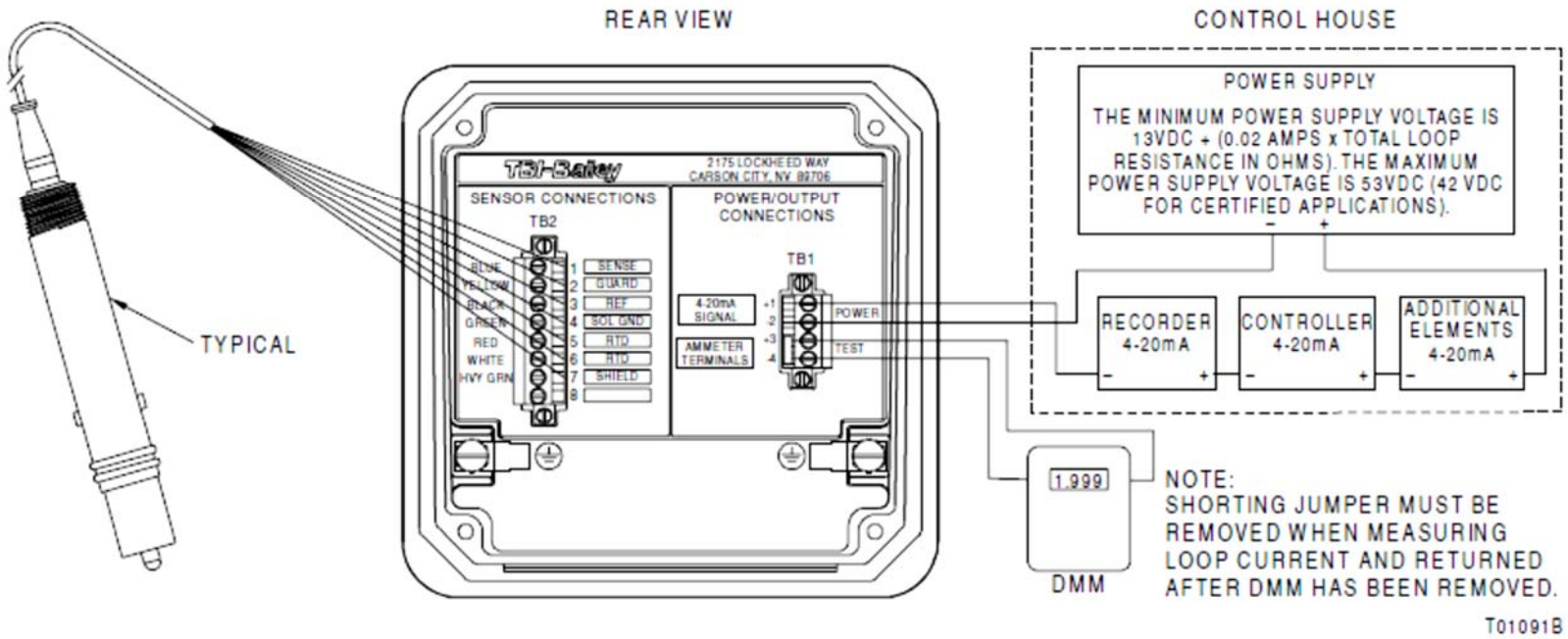

Figure 1. Location of Shorting Jumper

Procedure

Step	Sensor Visual Inspection and Cleaning
1	Remove the sensor from the process every 48-72 hrs.
2	Inspect the sensor body for cracks and distortions. If cracks or distortions exist, contact ABB for alternative sensor styles and materials.
3	Inspect the sensor cable for cracks, cuts or shorts.
4	Check the junction box, connections, or extension cable for moisture, oil, corrosion or particulates. All connections must be dry and free of oil, corrosion and particulates. Even slight amounts of these contaminants can short sensor signals due to their high impedance.
5	Locate the connector. Check to see that it is dry and not shorting against any metal, earth grounds or conduit.
6	Inspect the glass measuring electrode for breaks or cracks. If breaks or cracks exist, contact ABB for alternative electrode choices or suggestions regarding alternate sensor mounting locations. If no breaks or cracks exist, use a tissue to dry the measuring electrode.
7	Hold the sensor up to a bright light. Scaling appears as a whitish, textured material on the surface of the measuring electrode. Films usually have a streaky, multicolored appearance. If scales or film exists, clean the sensor using the procedures presented below.
8	The reference junction is the area between the measuring electrode and the sensor body. Inspect the reference junction for heavy foulants or scaling. If heavy fouling or scaling exists, clean the sensor using the procedures presented below. If the reference junction has been corroded by process chemicals, contact ABB for alternate reference junction materials.
9	If the solution ground shows evidence of corrosion or deterioration or the O-rings appear distorted or swollen, contact ABB for alternate material choices.

Tools/Supplies

Clean Cloth	Bon Ami Cleaner
Soft Bristle Toothbrush	

Procedure

Step	Sensor Cleaning (After Inspection)
1	Physical Cleaning: -Physical cleaning will remove scale and other accumulations. When mechanically cleaning the sensor, always use a soft bristle brush in order to avoid damaging the insulative coating on the solution ground (the metallic collar around the measuring electrode). This coating is only present on the outer diameter next to the reference junction and must be intact for the reference diagnostics to function properly.
2	Use a tooth brush with the Bon Ami solution to gently clean the sensor. Take extreme caution when cleaning the glass ORP electrode to prevent glass breakage.

Tools/Supplies

Thermometer	ORP Standard Solution

Procedure

Step	ORP Sensor Calibration & Reconditioning (Weekly)
1	Prepare the two ORP standard solutions.
2	Remove the sensor from the process by gently pulling up on the sensor cable straight up the pipe surrounding the sensor.
3	Clean the ORP sensor as outlined in the cleaning steps above. Place the ORP sensor in the acid/pepsin cleaning solution for 60 minutes.
4	Remove the standbye probe from the storage solution and follow the calibration procedures outline below:
5	Press the NEXT smart key on the ORP transmitter until CALIBRATE is highlighted on the display.
6	Press the SELECT smart key to enter the calibrate state.
7	Press the NEXT smart key until 2PT.CAL appears on the display.
8	Press the SELECT smart key to start the two-point calibration procedure.
9	The transmitter displays the current temperature in degrees Celsius and TMP°C. Use the thermometer to measure the temperature of the ORP standard and enter that number into the transmitter.
10	The transmitter asks for the ORP VAL. Enter the ORP of the standard solution as labeled on the standard solution container.
11	Place the sensor in the standard solution.

12	Stir the solution with the sensor in a slow, circular motion for 30 seconds. Allow the sensor to stabilize for approximately 5 minutes in the standard solution.
13	The transmitter should now display STABL?. Observe the displayed reading and if it is stable, press the YES smart key. If it is not stable, press the NO smart key. If NO is selected, the transmitter returns to the process sensor calibration state. If the reading will not stabilize, perform steps 14 through 15 below. If YES is selected, skip ahead to step 14.
14	Wait until the process liquid composition stabilizes.
15	Check to see if the transmitter has detected a fault condition by looking for the FAULT icon on the display. If there is a fault, Interrogate the fault by navigating to the measure mode through the EXIT TO MEASURE smart key and then by pressing the FAULT info smart key.
16	The transmitter asks for the HI VAL. Enter the value of the high standard as read form the standard container.
17	Remove the sensor from the standard solution.
18	Rinse the sensor with de-ionized water.
19	Place the sensor in the high standard solution.
20	Repeat steps 9-15 above for the high standard solution.
21	If the entered calibration value is not valid, the transmitter displays BAD.CAL, and the calibration value is rejected. If the entered calibration value is valid, the slope (sensor efficiency) appears on the display. Press the NEXT smart key to display the offset.
22	Press the NEXT smart key to return to the process sensor calibrate state or press the exit to MEASURE smart key to go to the measure mode. Document calibration and measured values in the B&L Woodwaste Weekly Plant Checklist (Attachment P-001). Follow record keeping procedures for filled out checklists and probe logs.
23	If the slope as indicated on the transmitter falls below 80% or the offset exceeds +/- 150 mV, recondition the probe by placing in the acid/pepsin solution for an hour and then in the storage solution for 12 hrs. If the calibration parameters are still outside of the accepted range, the probe needs to be replaced.
24	Remove the probe from the acid/pepsin solution from step 3 and place the probe in the storage solution.
25	ORP probes will be reconditioned and re-calibrated once a week and cleaned 2 other times during a week as indicated in procedure P-001.

STANDARD OPERATION PROCEDURE:
B&L WOODWASTE GROUNDWATER TREATMENT SYSTEM
P120 - CO-PRECIPITATION TANK
B&L Woodwaste Landfill
Milton, Washington

OPERATION PROCEDURES, GENERAL OVERVIEW

Introduction

This procedure outlines operational procedures for the co-precipitation tank in the groundwater treatment system at the B&L Woodwaste Site. The co-precipitation tank mixes the groundwater that comes in from the oxidation tank with lime that is dosed from the lime slurry tank. The lime increases the pH of the groundwater, which facilitates the co-precipitation of the oxidized arsenic with the oxidized iron present in the groundwater. Coagulant and sludge recirculation lines also dose into the co-precipitation tank and assist with precipitation by providing more particles and charge in the groundwater to increase particle interactions and thus larger particle formation.

Pre-requisites to Do This Procedure

To do this procedure you must:

- Be fully trained for treatment system operations or be training in the area with someone who has been fully trained.
- Be fully trained for handling and management of dangerous wastes.
- Be familiar with all aspects of this operating procedure.
- Be Hazardous Waste Operations (HAZWOPER)-trained and current with annual training updates.

In This Procedure

Following is a list of topics in this Procedure:

1.0 SAFETY CONSIDERATIONS

Health and Safety Plan (HASP)

The most recent version of the HASP is maintained in the treatment building office and provides plans and requirements to protect the health and safety of workers involved in the operation and maintenance of the groundwater extraction and treatment system. All workers must be familiar with and sign the HASP. Specific requirements for Personal Protective Equipment (PPE) are included in the HASP. If there are any discrepancies between PPE requirements included in these procedures and PPE requirements specified in the HASP, the requirements specified in the HASP shall be followed.

Level of Hazard

Medium

Hazards associated with this task include contaminated sludge and water that contains arsenic. Other hazards include contact with the lime feed solution or the coagulant feed solution, which will cause irritation if they come into contact with skin or eyes. Thus, operators should stay alert and wear appropriate PPE when working with the co-precipitation system. There are also electrical components acting in the system which require proper lockout/tagout of all associated electrical systems prior to any maintenance performed. The co-precipitation tank will contain groundwater contaminants so appropriate PPE must be worn as defined in the HASP.

Due to the presence of dangerous waste within the closed landfill, all personnel working at the site must be fully trained in accordance with 29 CFR 1910 and WISHA regulations. Forty-hour HAZWOPER training with yearly eight hour refresher training is required for anyone performing work at the B&L Woodwaste Site.

2.0 NORMAL STARTUP AND SHUTDOWN

Critical Information

Dosing into the co-precipitation tank will begin during plant startup. The oxidized groundwater flows in from the oxidation tank and is dosed with coagulant, lime and sludge via the PLC controller. The coagulant is dosed at a rate that is proportional to the groundwater influent flow (as given from the influent flow meter). The lime is dosed based on a PLC loop that targets a pH of 9.2. The sludge is dosed based on a user specified sludge recycle ratio that is fed from the clarifier underflow.

Procedure

Step	Normal Startup
1	Turn on the co-precipitation tank mixer in the motor control center (MCC) by turning the hand-off-auto (HOA) switch labeled “Co-precip Tank Mixer” to “Auto.” Ensure that the co-precipitation tank mixer is spinning smoothly.
2	The pH target in the co-precip tank is 9.2. Ensure that the correct target pH is inputted into the PLC. Follow the plant start up procedures (P-050) when the pH is more than 0.5 SU off from the target.

3	If the PLC is reporting a value far from the target, take note and investigate. If the pH meter is jumping around or giving erroneous readings, follow the cleaning and calibration procedures for the sensor below. If the pH displayed on the PLC is displaying a sinusoidal curve that is getting larger in amplitude as time progresses, the PLC's lime dosing loop may need to be calibrated. Contact the process engineer for more information.

Procedure

Step	Normal Shutdown
1	Cut power to the co-precipitation tank mixer from the MCC by flipping the HOA switch labeled "Co-precip Tank Mixer" to "OFF".
2	The lime dosing pump, coagulant pump, and the sludge recirculation pump will all shut off during a plant shutdown.

3.0 MIXER OPERATION

Critical Information

The mixer in the co-precipitation tank ensures thorough mixing of the feed solutions from the lime slurry tank and the coagulant dosing system with the influent from the oxidation tank and the sludge recycled from the clarifier underflow (acting as a seed for floc formation). Thorough mixing is required to provide sufficient interaction of particles and a good distribution of the additives to promote co-precipitation of the iron and arsenic.

Personal Protective Equipment

Safety Glasses	Nitrile Gloves
Steel Toe Boots (Leather or Rubber)	Steel Toe Boots (Leather or Rubber)

Procedure

Step	Co-Precipitation Tank Mixer Inspection and Maintenance - 6 Month Inspection
1	While the mixer is running, inspect the mixer for unusual sounds, excessive vibration, excessive heat, or any grease leakage. If any of these observations are made, stop the mixer and diagnose the problem and fix the problem if possible.
2	Turn off the propeller during the six month inspection and visually inspect the propeller for evidence of corrosion or other damage.

3	During the six month inspection, check for loose hardware. If required, re-torque the mixers' bolts securing the hardware to the original specifications (Torque value dependent on bolt size as given in the PMSL PV-2 instruction manual).
4	If there is an extended shutdown, run the mixer for approximately 10 minutes once a week to ensure that a coat of grease is distributed among the gears and bearings to prevent rust due to moisture condensation.

4.0 PH METER OPERATION AND MAINTENANCE

Critical Information

The pH transmitter will measure pH in the co-precipitation tank to control the rate at which the lime feed solution is added to the co-precipitation tank. The pH sensor and transmitter must be maintained properly to prevent improper lime dosing. The pH transmitter output must be calibrated at a minimum annually to ensure quality of data. In addition, the pH sensor must be calibrated at least once a month or more frequently if the sensor is suspected to be the source of a problem (as determined by the observation of erroneous or erratic readings). If the sensor is the suspected problem, a visual inspection to determine if any visible damage is present is also required.

Tools/Supplies

Digital Multimeter	Bladed Screwdrivers (Small and Large)
Kimwipes	

Personal Protective Equipment

Safety Glasses	Nitrile Gloves
	Steel Toe Boots (Leather or Rubber)

Procedure

Step	Calibrate pH Transmitter Output (Annually)
1	Use the bladed screwdriver to loosen the four captive screws that secure the rear cover to the transmitter.
2	Use the small bladed screwdriver to remove the shorting jumper from the test terminals, TB1-3 (+) and TB1-4 (-), as shown in Figure 1.
3	Connect the DMM, set to measure mA, to the TEST terminals, TB1-3 (+) and TB1-4 (-).
4	Press the NEXT smart key until CALIBRATE is highlighted on the display.
5	Press the SELECT smart key to enter the calibrate state.
6	Press the NEXT smart key until OUT.CAL appears on the display.
7	Press the SELECT smart key to start the output calibration procedure.

8	Use the up and down smart keys to adjust the output so that the DMM reads 4.0 mA.
9	Press the ENTER smart key to enter the corresponding new value as read on the transmitter and proceed to the 20-mA output.
10	Use the up and down smart keys to adjust the output so that the DMM reads 20.0 mA.
11	Press the ENTER smart key to enter the new value as read on the transmitter. The transmitter then returns to the output calibrate state. NOTE: Once the output level has been permanently stored using the ENTER smart key, the output calibration procedure must be repeated to rectify a bad calibration.
12	Press the EXIT TO MEASURE smart key to return to the measure mode.

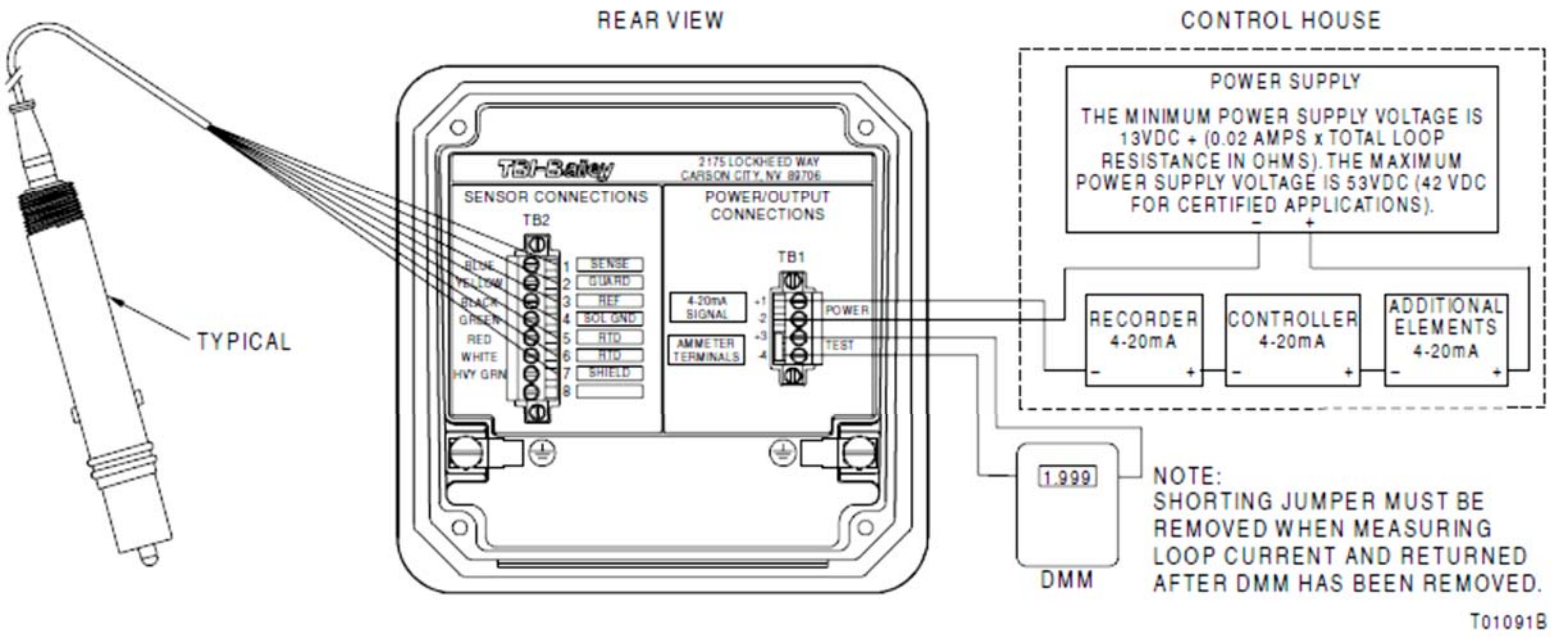

Figure 1: Location of Shorting Jumper

Procedure

Step	Sensor Visual Inspection
1	Remove the sensor from the process every 48-72 hrs.
2	Inspect the sensor body for cracks and distortions. If cracks or distortions exist, contact ABB for alternative sensor styles and materials.
3	Inspect the sensor cable for cracks, cuts or shorts.
4	Check the junction box, connections, or extension cable for moisture, oil, corrosion or particulates. All connections must be dry and free of oil, corrosion and particulates. Even slight amounts of these contaminants can short sensor signals due to their high impedance.
5	Locate the connector. Check to see that it is dry and not shorting against any metal, earth grounds or conduit.
6	Inspect the glass measuring electrode for breaks or cracks. If breaks or cracks exist, contact ABB for alternative electrode choices or suggestions regarding alternate sensor mounting locations. If no breaks or cracks exist, use a tissue to dry the measuring electrode.
7	Hold the sensor up to a bright light. Scaling appears as a whitish, textured material on the surface of the measuring electrode. Films usually have a streaky, multicolored appearance. If scales or film exists, clean the sensor using the procedures presented below.
8	The reference junction is the area between the measuring electrode and the sensor body. Inspect the reference junction for heavy foulants or scaling. If heavy fouling or scaling exists, clean the sensor using the procedures presented below. If the reference junction has been corroded by process chemicals, contact ABB for alternate material choices.
9	If the solution ground shows evidence of corrosion or deterioration or the O-rings appear distorted or swollen, contact ABB for alternate material choices.

Tools/Supplies

Clean Cloth	DI
Soft Bristle Toothbrush	

Procedure

Step	Sensor Cleaning (After Inspection)
1	Physical Cleaning: -Physical cleaning will remove scale and other accumulations. When mechanically cleaning the sensor, always use a soft bristle brush in order to avoid damaging the insulative coating on the solution ground (the metallic collar around the measuring electrode). This coating is only present on the outer diameter next to the reference junction and must be intact for the reference diagnostics to function properly.
2	Use a tooth brush with DI to gently clean the sensor. Take extreme caution when cleaning the glass pH electrode to prevent glass breakage.

Tools/Supplies

Temperature Measuring Device	Low and High pH Standard Solutions

Procedure

Step	pH Sensor Calibration (Weekly) & Reconditioning (Monthly)
1	Prepare the pH 7.00 and 10.01 standard solutions.
2	Remove the sensor from the process by gently pulling up on the sensor cable straight up the pipe surrounding the sensor. During weekly calibration, clean the pH sensor as outlined in the cleaning steps above.
3	Press the NEXT smart key until CALIBRATE is highlighted on the display.
4	Press the SELECT smart key to enter the calibrate state.
5	Press the NEXT smart key until 2PT.CAL appears on the display.
6	Press the SELECT smart key to start the two-point calibration procedure.
7	The transmitter displays the current temperature in degrees Celsius and TMP°C. Use the temperature measuring device to measure the temperature of the pH standard and enter that number into the transmitter.
8	The transmitter asks for the LO VAL. Enter the value of the low pH standard solution as labeled on the standard solution container.
9	Place the sensor in the low standard solution.
10	Stir the solution with the sensor in a slow, circular motion for 30 seconds. Allow the sensor to stabilize for approximately 5 minutes in the standard solution.
11	The transmitter should now display STABL?. Observe the displayed reading. If it is stable, press the YES smart key. If it is not stable, press the NO smart key. If NO is selected, the transmitter returns to the process sensor calibration state. If the reading will not stabilize, perform steps 12 through 13 below. If YES is selected, skip ahead to Step 14.

12	Wait until the process liquid composition stabilizes.
13	Check to see if the transmitter has detected a fault condition by looking for the FAULT icon on the display. Interrogate the fault by navigating to the measure mode through the EXIT TO MEASURE smart key and then by pressing the FAULT info smart key.
14	The transmitter asks for the HI VAL. Enter the value of the high buffer or standard.
15	Remove the sensor from the low buffer or standard solution.
16	Rinse the sensor with de-ionized water.
17	Place the sensor in the high standard solution.
18	Stir the solution with the sensor in a slow, circular motion.
19	The transmitter should now display STABL?. Observe the displayed reading. If it is stable, press the YES smart key. If it is not stable, press the NO smart key. If NO is selected, the transmitter returns to the process sensor calibration state. If the reading will not stabilize, perform steps 12 through 13 above. If YES is selected, go on to Step 20 below.
20	If the entered calibration value is not valid, the transmitter displays BAD.CAL, and the calibration value is rejected. If the entered calibration value is valid, the slope (sensor efficiency) appears on the display. Press the NEXT smart key to display the offset.
23	Press the NEXT smart key to return to the process sensor calibrate state or press the exit to MEASURE smart key to go to the measure mode. Document calibration and measured values in the B&L Woodwaste Weekly and Monthly Plant Checklist (Attachment P-001). Follow record keeping procedures for filled out checklists and probe logs.
24	If the slope as indicated on the transmitter falls below 80% or the offset exceeds +/- 150 mV, recondition the probe by placing in the acid/pepsin solution for an hour and then in the storage solution for 12 hrs. If the calibration parameters are still outside of the accepted range, the probe needs to be replaced.
25	Once a month the pH probe will need to be reconditioned and will be replaced with the standbye pH probe.
26	Clean the pH sensor being pulled out of the process as outlined in the cleaning steps above. Place the pH sensor in the acid/pepsin cleaning solution for 60 minutes.
27	Remove the standbye probe from the storage solution and follow the calibration procedures outline above.
28	Remove the probe from the acid/pepsin solution from step 26 and place the probe in the storage solution.

STANDARD OPERATION PROCEDURES:
B&L WOODWASTE GROUNDWATER TREATMENT SYSTEM
PROCEDURE P130 – CLARIFIER SYSTEM
B&L Woodwaste Landfill
Milton, Washington

OPERATION PROCEDURES, GENERAL OVERVIEW

Introduction

This procedure outlines operational procedures for the clarifier in the B&L Woodwaste groundwater treatment system.

Pre-requisites to Do This Procedure

To do this procedure you must:

- Be fully trained for treatment system operations or be training in the area with someone who has been fully trained.
- Be fully trained for handling and management of dangerous wastes.
- Be familiar with all aspects of this operating procedure.
- Be Hazardous Waste Operations (HAZWOPER)-trained and current with annual training updates.

In This Procedure

Following is a list of topics in this Procedure:

1.0 SAFETY CONSIDERATIONS

Health and Safety Plan (HASP)	The HASP maintained in the treatment building provides plans and requirements to protect the health and safety of workers involved in the operation and maintenance of the groundwater extraction and treatment system. All workers must be familiar with and sign the HASP. Specific requirements for Personal Protective Equipment (PPE) are included in the HASP. If there are any discrepancies between PPE requirements included in these procedures and PPE requirements specified in the HASP, the requirements specified in the HASP shall be followed.
Level of Hazard	**Low** Due to the presence of Dangerous Waste within the closed landfill, all personnel working at the site must be fully trained in accordance with 29 CFR 1910 and WISHA regulations. Forty-hour Hazardous Waste Operations Training with yearly eight hour refresher training is required for anyone performing work at the B&L Woodwaste Site.

2.0 NORMAL OPERATION / RUNNING ADJUSTMENTS

Critical Information

Periodic equipment adjustment of the clarifier feed rate, and chemical dosage is needed for maximum clarifier efficiency. The agitator described below is used in the flash mixer and will quickly stir the water to produce chemical mixing. The flocculator mixer produces a slow stir to encourage flocculation.

Personal Protective Equipment

Safety Glasses	Latex or Nitrile Gloves
Steel Toe Boots (Leather or Rubber)	

Procedure

Step	Normal Operation
1	Check the dosage of polymer during operation. Confirm that dosing ratio results in proper amount of polymer. The polymer dosing ratio on the PLC should remain constant and the PLC will automatically dictate dosage based on system flow.
2	Adjust the RPM of the flocculator. If the speed of the agitator is too high, the floc will break down and therefore settle more slowly, which will result in a poorer quality effluent. If the speed is too low, flocculation will not be complete due to lack of mixing for better contact between floc and suspended solids. Flocculator should be left at constant speed unless flocculation quality is suspect. Verify changes with process engineer.
3	Adjust the sludge pump to discharge a volume equal to the percentage volume of solids going into the clarifier. To determine the approximate percentage volume of solids, fill a 1000 ml graduated cylinder with liquid from the flash mixer. Sample the liquid 4 to 8 inches from the wall adjacent to the flocculation tank and at a depth of 2 to 3 feet. Wait five minutes for the solids to settle in the cylinder and then measure the volume of sludge. If the sludge volume in the cylinder is 100ml, the sludge pump should discharge an average rate equal to 10% of the feed rate. Look in the equipment manual for the Husky 515 air diaphragm pump to find pump curves and calculate solenoid timers.
4	Make sure the sludge level is not above the upper-most tap (top effluent gate valve) in the sludge hopper.

3.0 NORMAL STARTUP AND SHUTDOWN

Critical Information

Start-up and shutdown procedures required before and after system downtime.

Procedure

Step	Normal Startup
1	All processes should start as normal when powering up the system and starting flow.
2	Ensure that the flash mixer and flocculator are both running.
3	Check that gate valves are open on the air compressor pathway to the first sludge diaphragm pump.
4	Check that the sludge pump settings (run time vs. downtime on air compressor solenoid valve) are correct (see normal operation procedures for more information.).
5	During system inspection, take a sample from the higher effluent sampling valve to ensure that sludge is not accumulating in vessel. If there is sludge at this effluent, the air compressor solenoid valve settings must be adjusted for more run time. (See normal operation procedures for more information.)

Procedure

Step	Normal Shutdown
1	Power down flash mixer and flocculator from the MCC. Breakers are labeled, HOA switch should be switched to “off.”
2	Close the gate valve transporting air from the compressor to the sludge pump under the clarifier. This will prevent the diaphragm pump from pumping water (as opposed to sludge) out of the clarifier.

4.0 START-UP AFTER POWER FAILURE OR FIRST TIME STARTUP

Critical Information

This procedure should be followed upon first use or use after a power or mechanical failure. Perform the following preliminary checks before starting up system for the first time or after power/mechanical failures.

Procedure

Step	Startup After Power Failure
1	Confirm that gear reducers are filled to proper level with recommended lubricant (see procedures below).
2	Check for proper secure installation of guards and safety devices at any hazardous location.
3	Check that electric motors have been greased with one shot as per lubrication instructions.
4	Check for completion of all electrical connections.
5	Check all mounting bolts for proper torque.
6	Check all external bolts to make sure they have not loosened.
7	Check the bottom of the floc and or flash mix tank for any obstacles.
8	Follow normal startup procedure (3.0).
9	Observe the mixer shaft and prop or shaft and turbine rotation. This rotation should be smooth and concentric about the output shaft centerline.

5.0 FLASH MIXER OPERATION AND MAINTENANCE

Critical Information

The Lamella Clarifier Flash Mixer needs preventative maintenance, which should be documented and performed according to the schedule below.

Tools/Supplies

Wrench	Screwdrivers

Personal Protective Equipment

Safety Glasses	Latex or Nitrile Gloves
Hard Hat	

Procedure

Step	Lamella Clarifier Flash Mixer Maintenance (Every 10,000 Hours)
1	Lockout and tagout power source before beginning if electrical components are to be disturbed.
2	Lubricate the Nord helical flange-mounted reducers with ISO VG 220 mineral oil.
3	The flash mixer gear oil should be replaced at least after every 10,000 operating hours or after every two years.
4	The proper ISO viscosity for the helical-worm gear is VG220. Mobil's Spartan EP220 is the recommended brand.
5	The location of the oil drain is shown on figure 1.

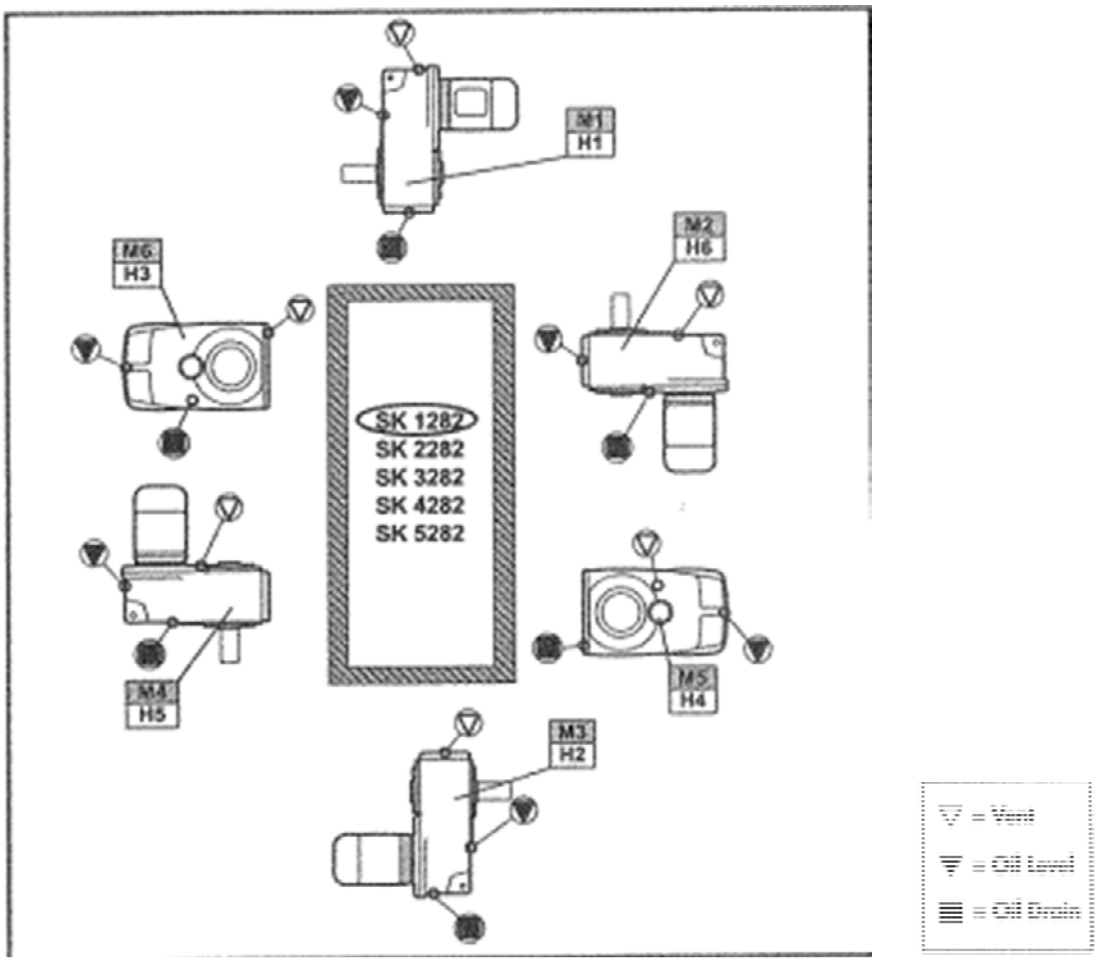

Figure 1: Locations of oil vent, level, and drain on Nord Drivesystems flash mixer motor.

6.0 FLOCCULATOR MIXER OPERATION AND MAINTENANCE

Critical Information	The Lamella Clarifier Flocculator mixer needs preventative maintenance that is documented and performed on schedule.

Tools/Supplies

Wrench	Screwdrivers

Personal Protective Equipment

Safety Glasses	Latex or Nitrile Gloves
Hard Hat	

Procedure

Step	Lamella Clarifier Flocculator Maintenance (Every 20,000 Hours)
1	Lockout and tag out power source before beginning if electrical components are to be disturbed.
2	Nord helical worm gear reducers are lubricated with ISO VG 680 synthetic-hydrocarbon/polyalphaolefin worm gear oil.
3	The helical-worm gear oil should be replaced at least after every 20,000 operating hours or after every four years.
4	The proper ISO viscosity for the helical-worm gear is VG680. Mobil's SHC636 is the recommended brand.
5	The location of the oil drain is shown on figure 2.

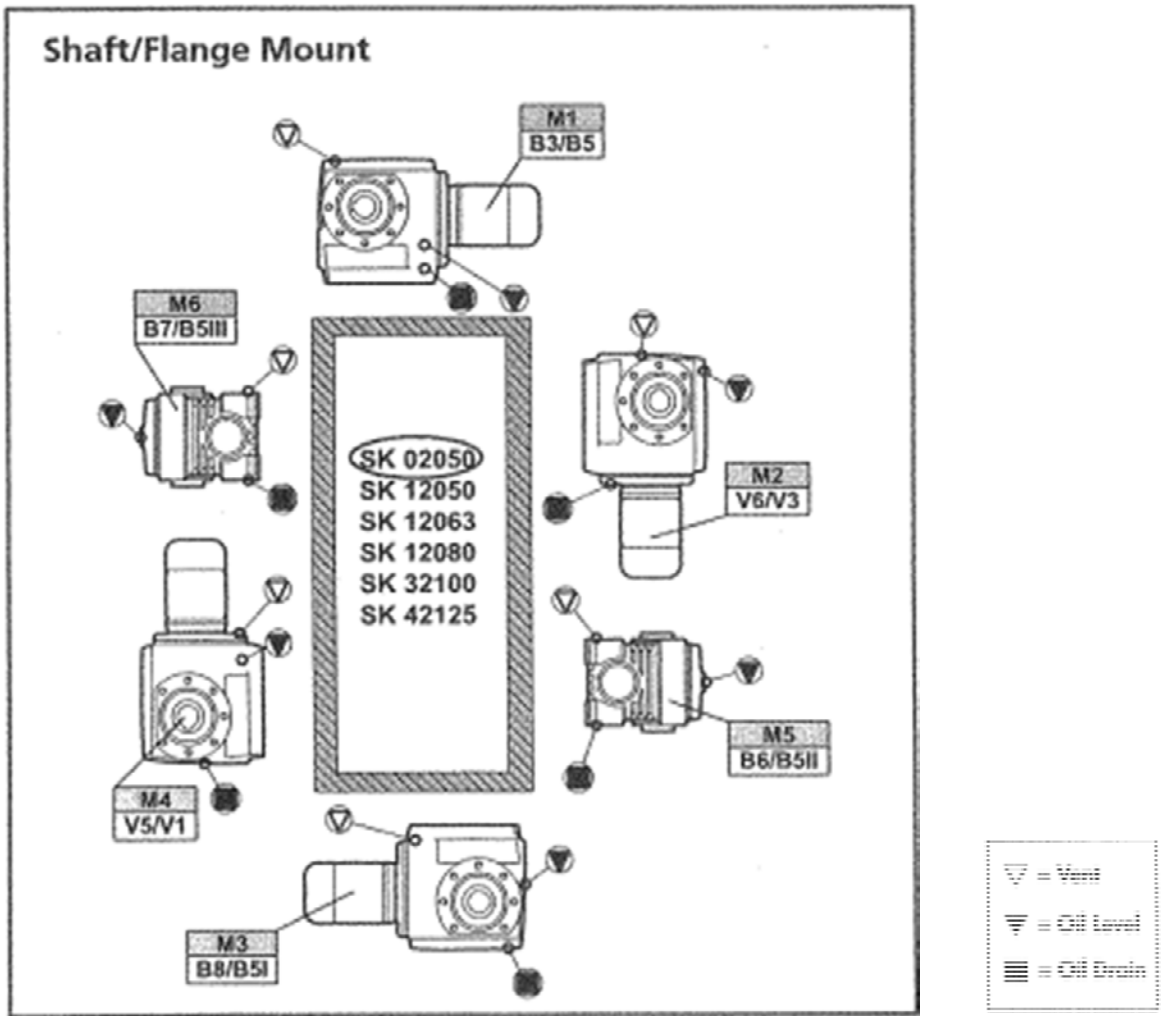

Figure 2: Locations of oil vent, level, and drain on Nord Drivesystems flocculator motor.

STANDARD OPERATION PROCEDURES:
B&L WOODWASTE GROUNDWATER TREATMENT SYSTEM
P250 - SECONDARY CONTAINMENT SYSTEM
B&L Woodwaste Landfill
Milton, Washington

OPERATION PROCEDURES, GENERAL OVERVIEW

Introduction

This procedure outlines operational procedures for the secondary containment system in the B&L Woodwaste groundwater treatment system.

Pre-requisites to Do This Procedure

To do this procedure you must:

- Be fully trained for treatment system operations or be training in the area with someone who has been fully trained.
- Be fully trained for handling and management of dangerous wastes.
- Be familiar with all aspects of this operating procedure.
- Be Hazardous Waste Operations (HAZWOPER)-trained and current with annual training updates.

In This Procedure

Following is a list of topics in this Procedure:

1.0 SAFETY CONSIDERATIONS

Health and Safety Plan (HASP)	The HASP maintained in the treatment building provides plans and requirements to protect the health and safety of workers involved in the operation and maintenance of the groundwater extraction and treatment system. All workers must be familiar with and sign the HASP. Specific requirements for Personal Protective Equipment (PPE) are included in the HASP. If there are any discrepancies between PPE requirements included in these procedures and PPE requirements specified in the HASP, the requirements specified in the HASP shall be followed.
Level of Hazard	**Medium** The secondary containment area will prevent leakage of contaminated water to the environment. Operators should don appropriate PPE before investigating secondary containment fluids, which will contain contaminated water. Lockout secondary containment sump if taking off secondary containment grate. Due to the presence of Dangerous Waste within the closed landfill, all personnel working at the site must be fully trained in accordance with 29 CFR 1910 and WISHA regulations. Forty-hour Hazardous Waste Operations Training with yearly eight hour refresher training is required for anyone performing work at the B&L Woodwaste Site.

2.0 SETUP AND NORMAL OPERATION

Critical Information

The secondary containment system will gather any spills in the treatment system at the lowest concrete basin. The water will gather in a large sump and be pumped to the sludge tank.

Procedure

Step	Setup and Normal Operation
1	Water should be flowing into the sump from the polymer dosing pump seals during normal operation.
2	Ensure that the water is not rising above the sump pump float switch. The sump pump should occasionally be turning on automatically due to polymer seal water.
3	Ensure that the containment area high-high level float switch is operational.

3.0 SUMP PUMP OPERATION AND MAINTENANCE

Critical Information

The sump pump will pump water out of the secondary containment area into the sludge tank. The sump pump needs to be tested after plant downtime to ensure it will work when needed. During normal operation the sump pump will activate occasionally to discharge seal water from the polymer pumps, so it will be obvious if the sump pump is faulty.

Personal Protective Equipment

Safety Glasses	Latex or Nitrile Gloves
Steel Toe Boots (Leather or Rubber)	

Procedure

Step	Sump Pump Testing
1	Before starting the system for the first time or after extended downtime, the sump pump should be tested.
2	Plug in the sump pump and fill the sump basin with water from the hose located next to the filter press.
3	The pump should turn on when the water causes the high level float switch to activate.
4	Perform several ON-OFF cycles by refilling the sump several times to assure satisfactory operation.

STANDARD OPERATION PROCEDURE:
B&L WOODWASTE GROUNDWATER TREATMENT SYSTEM
P310 - PERMANGANATE FEED SYSTEM
B&L Woodwaste Landfill
Milton, Washington

OPERATION PROCEDURES, GENERAL OVERVIEW

Introduction

This procedure outlines operational procedures for the permanganate feed system in the groundwater treatment system at the B&L Woodwaste Site. The potassium permanganate feed system feeds a prepared dilute potassium permanganate solution to the oxidation tank to oxidize the influent organic carbon, iron, manganese, and arsenic.

Pre-requisites to Do This Procedure

To do this procedure you must:

- Be fully trained for treatment system operations or be training in the area with someone who has been fully trained.
- Be fully trained for handling and management of dangerous wastes.
- Be familiar with all aspects of this operating procedure.
- Be Hazardous Waste Operations (HAZWOPER)-trained and current with annual training updates.

In This Procedure

Following is a list of topics in this Procedure:

1.0 SAFETY CONSIDERATIONS

Health and Safety Plan (HASP)	The most recent version of the HASP is maintained in the treatment building office and provides plans and requirements to protect the health and safety of workers involved in the operation and maintenance of the groundwater extraction and treatment system. All workers must be familiar with and sign the HASP. Specific requirements for Personal Protective Equipment (PPE) are included in the HASP. If there are any discrepancies between PPE requirements included in these procedures and PPE requirements specified in the HASP, the requirements specified in the HASP shall be followed.
Level of Hazard	**High** Hazards associated with this task include contact with the solid crystalline or liquid potassium permanganate (permanganate), which is a strong oxidizer and may be corrosive to skin and eyes. Inhalation of dust from the solid is highly dangerous and may irritate or damage the respiratory tract or the gastro-intestinal tract. A respirator is required whenever handing solid permanganate in addition to the other PPE as discussed in the Site HASP. Due to the presence of dangerous waste within the closed landfill, all personnel working at the site must be fully trained in accordance with 29 CFR 1910 and WISHA regulations. Forty-hour HAZWOPER training with yearly eight hour refresher training is required for anyone performing work at the B&L Woodwaste Site.

2.0 RECEIVING PERMANGANATE DELIVERY

Critical Information

Permanganate pails will need to be delivered to the site well in advance of when they are needed. A site chemical and supply inventory is required on a weekly basis. The pails may be delivered on a pallet, offloaded by a supplied forklift from the chemical supplier, or be offloaded with a drum dolly or pallet jack.

Tools/Supplies

Drum Dolly/Pallet Jack	

Personal Protective Equipment

Hard Hat	Safety Glasses
High Visibility Vest	Steel Toed Boots (Leather or Rubber)
Nitrile Gloves	Outer Work Gloves

Procedure

Step	Permanganate Delivery
1	Don appropriate PPE as defined above before receiving a permanganate shipment.
2	Clear a pathway to the permanganate pail storage area in the front of the building adjacent to the acid tote containment area on the ground level floor. The pathway should be wide enough to accommodate a drum dolly or pallet jack.
3	Clear the pallet storage area. Have a clear space to deposit delivered pails.
4	Open the overhead delivery door.
5	Allow the truck driver to lower the pallet or pail onto the ground. Do not try to lift materials directly off of the truck. Pails are heavy so extreme caution needs to be taken to avoid back strain when handling drums.
6	If the delivery is on a pallet, allow the truck driver to bring the pallet to a temporary storage area to the north of the delivery doors with a forklift. Pails may also be moved one-by-one with the drum dolly or by proper lifting and carrying techniques.

3.0 FEED SOLUTION PREPARATION

Critical Information

The PLC will aid the operator in preparing a feed solution of potassium permanganate by filling the mixing tank up to the high level as set on the PLC by the operator. The operator will manually add the solid potassium permanganate to the mixing tank using a pail loader assembly located adjacent to the tank on the mezzanine level as discussed below.

Personal Protective Equipment

Safety Goggles	Nitrile Gloves
Steel Toe Boots (Leather or Rubber)	Half Mask Respirator With Appropriate Cartridges

Procedure

Step	Feed Solution Preparation
1	Press the “MAKE BATCH” button on the PLC after preparing the drum dumping assembly. Confirm that the tank mixer is operating.
2	Upon pressing the “MAKE BATCH” button, water will begin flowing into the mixing tank. Water will flow into the tank until it reaches the level sensor “high” level, and then the solenoid valve will shut the water off. During this time, the operator should be dumping 5-gallon pails of permanganate into the tank using the pail dumping assembly.
3	To load permanganate into the permanganate tank, remove the pail lid and secure the pail loading lid to the top of the pail (same lid as the pail lid with appropriate fittings and slide valve). Secure the end fitting (fernco coupling) to the vertical pipe on the mezzanine level that extends down into the permanganate tank. Secure the fernco coupling to the pipe fitting Ensure that a good sealed connection is created. Open the valves for the potable water line that feeds water into the loading assembly (now attached to the top of the pail). Open the slide valve to begin dumping the contents of the pail into the permanganate tank.
4	One pail (55 lbs) is required for every 35 inches of water to make approximately a 10 g/L solution. **No batch should exceed 25 g/L.**
3	Monitor the level of the permanganate tank, making sure that there is no overfilling. The solenoid valve controlling the water influent should close when the designated “high” level is reached.
4	The tank mixer will stop at a given time after the batch has been made. The time setting can be found on the PLC next to the “MAKE BATCH” button.

5	Check that there are spare permanganate pails onsite. If there are not enough spares to make another batch, order chemicals from the preferred vendor. Document inventory status of spare pails on weekly Plant checklist and the Inventory spreadsheet.
6	The feed permanganate solution needs to be at 25 g/L or less based on its solubility (10 g/L has been observed to completely dissolve). You may check the concentration of the new feed solution by following the Potassium Permanganate Testing Procedure as found in the Laboratory Operating Procedures (P-010).
7	The target concentration in the oxidation tank is close to 20 mg/L but will likely fluctuate around this concentration as the influent water characteristics chnages. Verify that the correct volumetric dose ratio is set on the PLC to achieve the target concentration in the oxidation tank based on the permanganate feed solutions' concentration.
8	To adjust the volumetric flow ratio for the PLC, go to the process tab with the permanganate dosing pump on it from the home screen and click on the feed pump. The new volumetric dosing ratio may be calculated as follows: Volumetric Ratio (Q_{inf}/Q_{Dose}) = C_{Dose}/C_{Target} Where: C_{Dose} = Measurement in step 6 (in mg/L) C_{Target} = 20 mg/L

4.0 PERMANGANATE SYSTEM STARTUP AND NORMAL OPERATION

Critical Information

The permanganate tank will begin dosing to the oxidation tank when influent groundwater flow is introduced to the system and the system power is on. The permanganate feed solution is fed based on a volumetric feed ratio as set by the operator.

Personal Protective Equipment

Safety Glasses	Nitrile Gloves
	Steel Toe Boots (Leather or Rubber)

Procedure

Step	Normal Operation
1	There are two permanganate dosing pumps; one is in duty and the other is in standby as a backup. The pump in operation will start dosing when there is flow in the system as sensed by the influent flow meter (FIT-100 on Drawing P&ID-01). Check the PLC display to make sure that one pump is running and there are no errors. Also verify that the dosing ratio for the pumps is updated and accurate based on the Feed Solution Preparation procedure discussed above.
2	In order to change the stroke length percentage on the dosing pumps, manually turn the wheel on the front of the dosing pumps. Change the PLC option under “alarm settings 2” for permanganate stroke percentage to complete the logic change. The stroke frequency will be automatically adjusted by the PLC to compensate for the new stroke length.
3	Perform a visual inspection whenever onsite operating the system. Look for leaks of purple fluid in the secondary containment area or along the permanganate process line.
4	Check the clarify overflow to ensure that the overflow water is not purple as this indicates that excess permanganate is being dosed into the oxidation tank. Check dosing ratio based on the Feed Solution Preparation procedure discussed above. If dosing is accurate based on procedures, contact the process engineer to discuss solutions.

5.0 MIXER MAINTENANCE AND INSPECTION

Critical Information

Preventative maintenance should be performed on the $KMnO_4$ mixer according to the timeline in the procedure below. Operators should continually monitor sounds and vibrations, documenting changes.

Tools/Supplies

Wrench	Screwdrivers

Personal Protective Equipment

Safety Glasses	Nitrile Gloves
	Steel Toe Boots (Leather or Rubber)

Procedure

Step	$KMnO_4$ Tank Mixer Inspection and Maintenance - 6 Month Inspection
1	While the mixer is running, inspect the mixer for unusual sounds, excessive vibration, excessive heat, or any grease leakage. If any of these observations are made, stop the mixer and diagnose the problem and fix the problem if possible.
2	Turn off the propeller during the six month inspection and visually inspect the propeller for evidence of corrosion or other damage.
3	During the six month inspection, check for loose hardware. If required, re-torque the mixers' bolts securing the hardware to the original specifications (Torque value dependent on bolt size as given in the PMSL PV-2 instruction manual).
4	If there is an extended shutdown, run the mixer for approximately 10 minutes once a week to ensure that a coat of grease is distributed among the gears and bearings to prevent rust due to moisture condensation.

6.0 DOSING PUMP OPERATION AND MAINTENANCE

Critical Information	The permanganate dosing pump at the B&L Woodwaste treatment system is a ProMinent Sigma/2 dosing pump. Following the procedures below will allow for the proper dosing of permanganate to the co-precipitation tank. Operations will include dosage adjustment and preventative maintenance on the dosing pump.

Personal Protective Equipment

Safety Glasses	Nitrile Gloves
	Steel Toe Boots (Leather or Rubber)

The following “Operating Information” section is an excerpt from the equipment O&M manual that is present in the GWTP office. Refer to that manual for more information.

Set stroke length Stroke length is continually adjustable within a range of 0-100 %. The recommended stroke length range, which will practically guarantee technical reproducibility, is 30-100 % (SEK type: 50-100 %).

NOTE:
At low stroking rates (less than 1/3 maximum stroking rate) the controller switches to digital stroking mode. This ensures adequate cooling of the motor at low stroking rates.

The following operating options are available via the different keys

Stop/Start S2Ca
To stop S2Ca: press STOP/START key.
To start S2Ca: press STOP/START key.

Start batch
Press the P key briefly in “batch” operating mode.

Load factory settings
Press the P key for 15 s to load factory calibration settings. Current settings will be deleted.

Change to settings mode
When you press the P key for 2 s in any continuous display the S2Ca will change to settings mode.
If CODE 1 is set, the code must be entered after pressing the P key.

Check adjustable values
Each time you press the i key you will see a different continuous display. The number of continuous displays depends upon the identity code, the selected operating mode and the connected accessories.

Change directly alterable values
To change a value (see below) directly in the corresponding continuous display, press one of the arrow keys until “set” appears in the LCD display. The delay has been programmed in to prevent inadvertent changing of values. If CODE 2 has been set, this code must be entered after pressing the arrow key.

Directly alterable values are as follows:

Stroke rate
In “manual”, “contact” and “batch” operating modes, the stroke rate can be altered in the “stroke rate” display.

Feed rate
In “manual” operating mode, the feed rate can be altered in the “feed rate” display.

Operating Information

Factor
The factor is the number of strokes activated by an external pulse or a press of the P key (in “batch” mode only). In “Batch” operating mode, You can alter the factor from the “remaining strokes” display. The S2Ca returns to the original continuous display a few seconds after the factor has been reset.

Display program version
Press the P key for 10 seconds to display the program version. Example: “V1052” + “X1010”. In the case of “LOAD3” release the key immediately!

Batch size
In “batch” operating mode, the batch size can be changed from the “batch size/remaining litres” display. The S3Ca returns to the original continuous display a few seconds after the batch size has been reset.

Priming
The “priming” function is activated by pressing both arrow keys at the same time (in “Stroke rate” permanent display).

Cancel error
Error messages are cancelled by pressing the P key briefly.

Procedure

Step	Pump Maintenance
1	General recommendation for the maintenance interval on the dosing pumps is three months. Check the following during maintenance: - Secure fit of liquid end screws, - a secure fit of all metering lines (intake and delivery sides), - a secure fit of the head valve and the intake valve, and - if there is any signs of moisture at the leakage hole at the end of the disc (indicates possible diaphragm failure).
2	Operate the pump continuously for a short period of time in order to check whether it is pumping into the oxidation tank.
3	If pump is pumping into the oxidation tank but the dose appears to be wrong as observed by the ORP sensor in the oxidation tank or the visual observation of the oxidation tank feed that appears to be off from the expected flow, verify the pump is dosing correctly by noting the stroke length and pump speed and measuring the actual flow in the calibration column downstream of the metering pump. Check the observed flow with the expected flow from the pump.

Procedure

Step	Gear Oil Change
1	Gear oil should be changed out semi annually.

2	Specifications for the gear oil: Gear Oil ISO Viscosity Class VG 460, e.g. Mobil Gear 634, ProMinent Order No. 555325 (Amount of oil approx. 0.5 liters).

Procedure

Step	Replacing the Diaphragm (Inspect semiannually)
1	Unplug the permanganate pumps from the outlet and verify that the pump is off by cycling the power ON button.
2	Close the ball valve for the influent line located on the skid prior the influent line splitting between the two dosing pumps.
3	Close the ball valves on the effluent line located on the back of the pumps just downstream of the pumps.
4	Open the Y strainer located on the skid just upstream of the influent ball valve closed in step 2. Allow all of the liquid in the lines to fully drain prior to removing the pumps for servicing.
5	IMPORTANT Flush the liquid end (back end) of the pump. For this purpose, force water through the intake connection of the liquid end with a wash bottle.
5	Unscrew the diaphragm rupture sensor from the dosing head.
6	Slacken the six screws from the dosing head and remove the dosing head with screws (see Figure 1 below).
7	Then release the diaphragm from the driving rod by jerking anti-clockwise and unscrew.
8	Screw on the new diaphragm onto the driving rod until it has a tight fit.
9	Install the dosing head with the screws so that the suction connector is pointing downwards (observe the flow direction / arrow marking on the valves).
10	Screw the diaphragm rupture sensor into the dosing head.
11	Reconnect the pump to the influent and effluent lines.
12	Close the Y strainer on the skid that was opened to drain the lines in step 4.
13	Open the influent ball valve and the effluent ball valve of the pump to be put back into service.
14	Plug back in the pumps.
15	Switch the pump to be used on.
16	Check the pump for leaks while running the pump while the system is in operation and the permanganate system is dosing the oxidation tank.

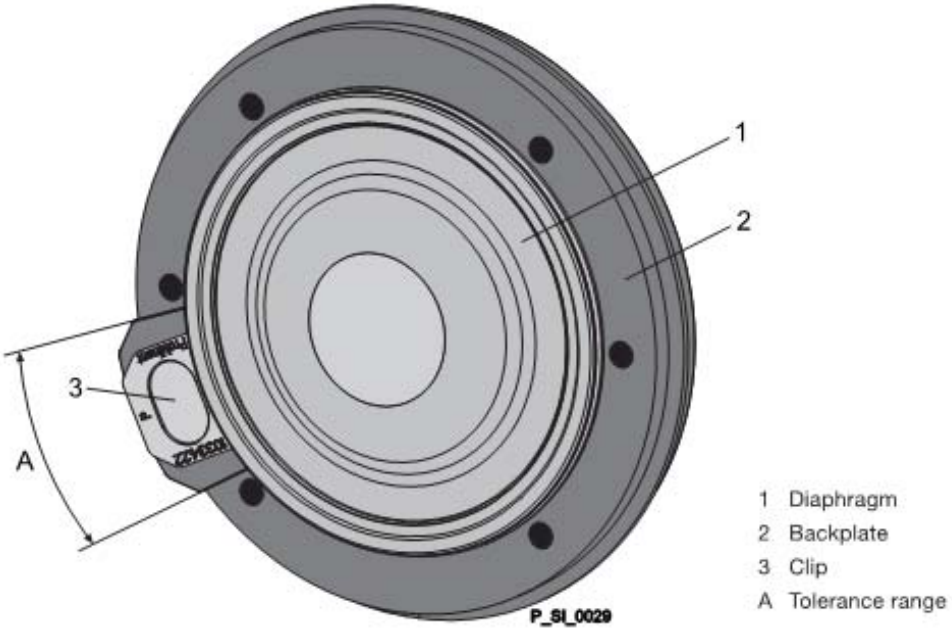

Fig. 16

Figure 1: Pump Diaphragm

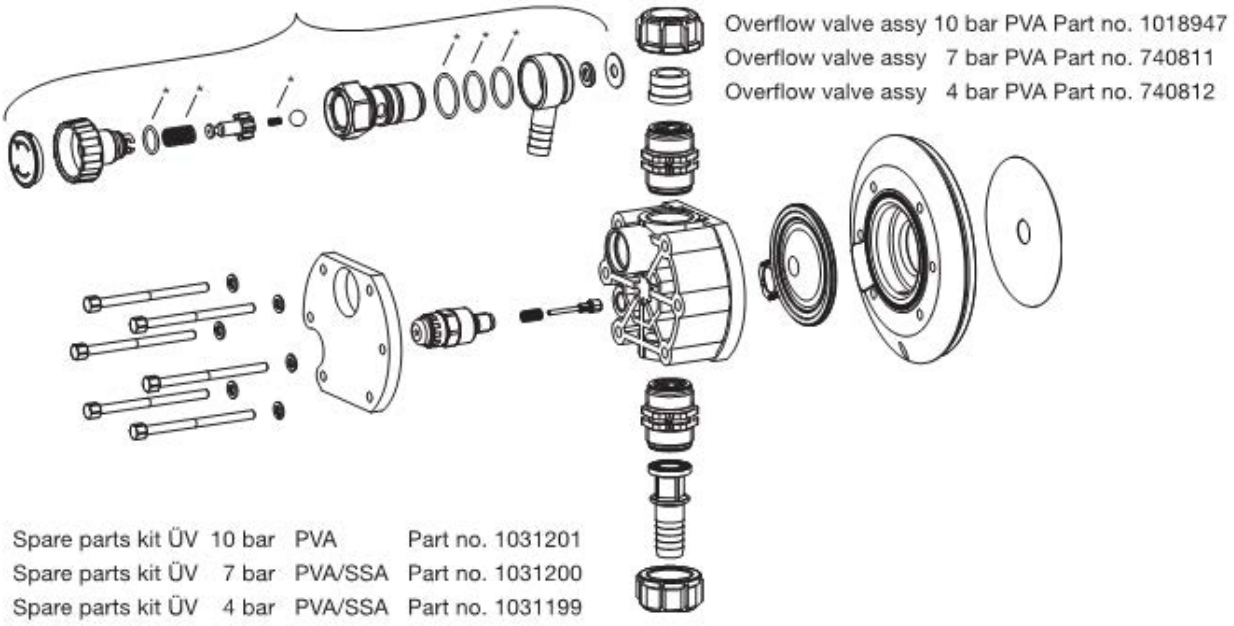

Figure 2: Expanded Parts Diagram with Ordering Numbers for Wearing Parts

7.0 SPILL RESPONSE AND CLEANUP

Critical Information	Perform visual inspections for spills on a regular basis while the system is in operation. In the event of a liquid spill, a wet vac or vac truck will be used to clean up the spill. If the spill is the solid permanganate, vacuum up the powder with the onsite HEPA-filter vacuum.

Personal Protective Equipment

Safety Goggles	Nitrile Gloves
Half Mask With Appropriate Cartridge Filter	

Procedure

Step	Spill Response and Cleanup
1	If a liquid spill occurs within the treatment building, document the occurrence and notify onsite personnel.
2	If the spill is small enough to be cleaned up by the onsite wet vacuum, use that to clean up the liquid. Ensure that the vacuum has been decontaminated and cleaned out before use. The liquid may be recycled into the permanganate tank if it has not come into contact with other chemicals. Clean the spill area by rinsing repeatedly with water. Clean the water up with a wet vacuum.
3	Decontaminate the vacuum after use. Drain decontamination water into a separate container and dump into the sump to run the water through the system.
5	If the spill is too large for a wet vacuum to clean up, call a vacuum truck. Make sure that the truck is compatible with potassium permanganate and that the driver knows the substance, concentration, and volume.
6	Allow the vacuum truck to park out front of the building and extend the hose through the smaller garage door into the secondary containment area. If no other chemicals were mixed with the permanganate in the secondary containment area, recycle the stock into the tank if possible. Otherwise, it must be disposed of at a licensed facility.
7	If solid permanganate is spilled, wear correct PPE including an appropriately fitted respirator with a purple P100 filter cartridge prior to performing cleanup.
8	Vacuum up solid permanganate with the onsite HEPA-filter vacuum. Small quantities of solid can be placed into the permanganate tank. Larger quantities need to be verified with process engineer prior to disposal.

8.0 CHECKING PERMANGANATE BASKET STRAINER

Critical Information

A basket strainer is installed on the permanganate dosing line after the gate valve from the permanganate storage tank. The basket strainer will catch any misplaced solids in the line from the permanganate storage tank. The strainer will be checked and cleaned out quarterly.

Personal Protective Equipment

Safety Glasses	Nitrile Gloves
Steel Toe Boots (Leather or Rubber)	

Procedure

Step	Checking The Permanganate Basket Strainer - Quarterly
1	The system does not need to be shut down during the basket strainer check as there should be minimal downtime (not enough for the oxidation tank to reach a low level alarm). Don proper PPE.
2	Shutoff the permanganate dosing pumps and lock them out.
3	First, lock out the basket strainer by closing the gate valves on either side of the strainer. Place a drip pan underneath the strainer to catch permanganate solution spilled during the procedure.
4	Remove the strainer from the line. Be careful as there will be permanganate solution in the strainer.
5	Look in the strainer to see if there are solids caught in the basket. If so, clean out the basket with water. Collect the solids, permanganate solution and water in the drip pan.
6	Dilute the bucket with additional water and pour the materials into the sump to be pumped into the system.
7	Restore the basket strainer and ball valves to their normal positions.

STANDARD OPERATION PROCEDURE:
B&L WOODWASTE GROUNDWATER TREATMENT SYSTEM
P320 - LIME FEED SYSTEM
B&L Woodwaste Landfill
Milton, Washington

OPERATION PROCEDURES, GENERAL OVERVIEW

Introduction

This procedure outlines operational procedures for the lime feed system in the B&L Woodwaste groundwater treatment system. The lime will raise the pH in the co-precipitation tank to encourage the formation of solids.

Pre-requisites to Do This Procedure

To do this procedure you must:

- Be fully trained for treatment system operations or be training in the area with someone who has been fully trained.
- Be fully trained for handling and management of dangerous wastes.
- Be familiar with all aspects of this operating procedure.
- Be Hazardous Waste Operations (HAZWOPER)-trained and current with annual training updates.

In This Procedure

Following is a list of topics in this Procedure:

1.0 SAFETY CONSIDERATIONS

Health and Safety Plan (HASP)	The HASP maintained in the treatment building provides plans and requirements to protect the health and safety of workers involved in the operation and maintenance of the groundwater extraction and treatment system. All workers must be familiar with and sign the HASP. Specific requirements for Personal Protective Equipment (PPE) are included in the HASP. If there are any discrepancies between PPE requirements included in these procedures and PPE requirements specified in the HASP, the requirements specified in the HASP shall be followed.
Level of Hazard	**High** The lime feed system contains a lime slurry concentrate of about 20-25% (approximately 3.5 lb $Ca(OH)_2$ per gallon). This material will cause irritation if it comes in contact with skin or eyes. Thus, operators should stay alert and wear appropriate PPE when working with the lime feed system. There are also electrical components acting in the system which necessitate proper lockout/tagout prior to maintenance. Due to the presence of Dangerous Waste within the closed landfill, all personnel working at the site must be fully trained in accordance with 29 CFR 1910 and WISHA regulations. Forty-hour Hazardous Waste Operations Training with yearly eight hour refresher training is required for anyone performing work at the B&L Woodwaste Site.

2.0 NORMAL OPERATION

Critical Information	The lime recirculation pump and lime tank mixer should always be on to prevent caking or hardening of the lime. Visual inspections must be performed on a regular basis to ensure the lime feed system is not in danger of being blocked and that it is not leaking.

Personal Protective Equipment

Safety Glasses	Latex or Nitrile Gloves
	Steel Toe Boots (Leather or Rubber)

Procedure

Step	Visual Inspections During Normal Operation
1	Check for kinking in the lime dosing pump line running from the recirculation line to the lime dosing pump, and out to the dosing line.
2	Check for leakage in the dosing pump and recirculation pump.
3	Look for lime spillage around lime/permanganate secondary containment area.

3.0 NORMAL STARTUP AND SHUTDOWN

Procedure

Step	Normal Startup
1	The dosing pump will come online automatically when the measured pH in the coprecipitation tank is below the pH setpoint. It may be necessary to press the “reset alarms” button on the PLC if the dosing pump does not turn on automatically. The lime tank mixer and peristaltic recirculation pump should already be operational.
2	Do a visual inspection as detailed above when starting up system.

Procedure

Step	Normal Shutdown
1	The lime tank mixer and peristaltic recirculation pump automatically remain on, even if groundwater pumping is stopped, unless there is a power failure.
2	The lime dosing pump will shut off on its own when the measured pH in the coprecipitation tank is at or above the pH setpoint. In addition, the pump will shut down during a plant shutdown.

4.0 STARTUP AFTER POWER FAILURE

Procedure

Step	Startup After Power Failure
1	After a power failure, the lime system should automatically resume operation. First, the lime tank mixer will turn on for approximately one minute. Then the lime recirculation pump will start in reverse for approximately one minute, to flush out the lime feed line. Then the lime recirculation pump will switch to forward operation. If the lime system does not start automatically, restart the lime tank mixer and lime recirculation pump as soon as possible after power failure by turning the circuit breakers back on. Turn the circuit breakers off and on in the MCC if the mixer and pump do not restart automatically.
2	Perform a visual inspection of the secondary containment area before restarting system after a power failure.
3	After a power failure, the “reset alarms” button on the PLC will likely need to be pressed in order to restart the lime dosing pump once the groundwater pumping system is restarted.

5.0 DOSING PUMP OPERATION AND MAINTENANCE

Critical Information

The Watson-Marlow dosing pump will meter lime from the peristaltic pump circulation line to the co-precipitation tank. The pump must be properly maintained to achieve pH target levels in the treatment system.

Personal Protective Equipment

Safety Glasses	Latex or Nitrile Gloves
Steel Toe Boots (Leather or Rubber)	

Procedure

Step	Dosing Pump Operation and Maintenance (Monthly)
1	The flexible hose inside the pump must be changed out monthly to prevent downtime due to clogs. The hose can be flattened or kinked on the inside of the pump. Remove the plastic covering over the peristaltic rotator to remove hosing. Replace with a new stretch of hosing. The hosing is flexible and tan in color and is located in a labeled Watson-Marlow box. Ensure that the installed hose is not subject to abrasion against any concrete or other abrasive surfaces. Document the date of the hosing change out and schedule next month's change out.

6.0 PERISTALTIC PUMP OPERATION AND MAINTENANCE

Critical Information

The SPX-40 peristaltic pump operating the lime slurry feed system will need preventative maintenance and occasional reactive maintenance. It is important to keep the pump running to avoid hardening of the lime and resulting stasis. Maintenance activities include checking the lubricant level, changing the lubricant, replacing the pump hose, and changing the gearbox oil. These should be documented for reference during troubleshooting.

In This Procedure

Following is a list of topics in this Procedure:

Tools/Supplies

Funnel	Tray	Wrench

Personal Protective Equipment

Safety Glasses	Latex or Nitrile Gloves
Steel Toe Boots (Rubber or Leather)	

Procedure 6.1

Step	Routine Inspection
1	Check the pump head for any leakage of lubricant around the cover, the flanges and the rear of the pump head.
2	Check the gearbox for any leakage.
3	Check pump for deviating temperature or strange noises.
4	When replacing the pump hose, check pressing shoes for excessive damage.

Procedure 6.2

Step	Checking the Lubricant Level
1	Periodically make sure that the lubricant level is above the minimum level line in the lubricant level inspection window. If the lubricant is below the minimum level line, replace the lubricant per procedure below.

Procedure 6.3

Step	Replacing the Lubricant
1	Place a tray (A) under the drain plug in the bottom of the pump. Remove the drain plug (B). Catch the lubricant from the pump housing in the tray. Check that the sealing ring (C) is not damaged and replace it if necessary. Position the drain plug and tighten it firmly. 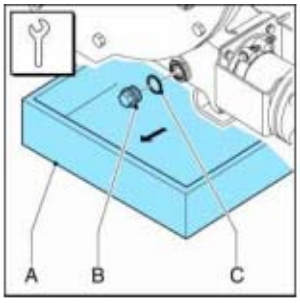
2	The pump can be filled with lubricant (lubricant is green colored and in a clear plastic Watson-Marlow labeled container) via the breather/vent (A) on the rear of the pump housing. For this purpose remove the breather cap (B) and position a funnel (C) in the breather. In order to facilitate the filling with lubricant the plug (D) on the front of the pump housing can be removed. Pour the lubricant in the pump housing via the funnel. Continue until the lubricant level is above the minimum level line. Replace the plug if you removed it. Replace the breather cap. 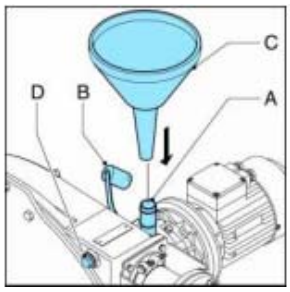

Procedure 6.4

Step	Replacing the Pump Hose (Every Six Months)
1	The pump hose should be replaced preventatively after 75% of its lifetime. Replacing the pump hose every six months should avoid plant shutdown due to unexpected hose rupture.
2	Isolate the pump from the electrical supply using proper lockout/tagout procedures. Turn off lime recirc pump breaker in MCC room and lock with LOTO padlock.
3	Close shut-off valves in both the suction and discharge line to minimize product loss.

4	Place a tray (A) under the drain plug in the bottom of the pump head. The tray must be large enough to contain the lubricant, possibly contaminated with lime, from the pump head. Remove the drain plug (B). Catch the lubricant from the pump housing in the tray. Check that the breather vent mounted on the rear is not obscured. Check that the sealing ring (C) is not damaged and replace it if necessary. Position the drain plug and tighten it firmly. 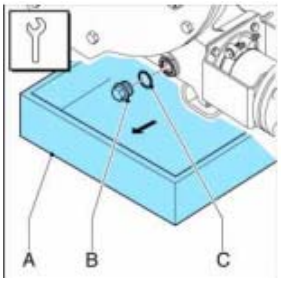
5	Loosen the retaining bolts (A) of both the suction and discharge line (B). Disconnect the suction and discharge lines. 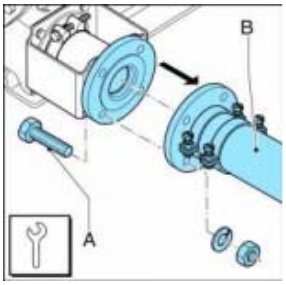
6	Loosen hose clamp (A) of both the inlet and outlet ports by loosening retaining bolt (B). 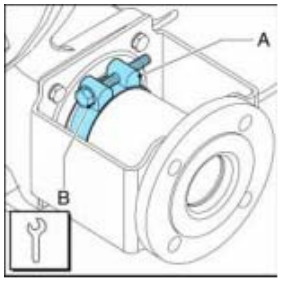
7	Pull the insert (B) from the hose and remove the flanges (A). Carry out this procedure both for the inlet and outlet ports. 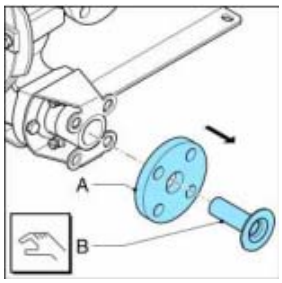

8	Loosen the retaining bolts (A) of the flange bracket (B) and remove the bolts. Slide the flange bracket and the hose clip (C) off the hose. Carry out this procedure both for the inlet and outlet ports. 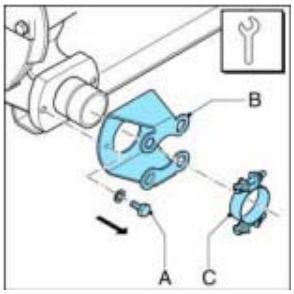
9	Slide off the sealing ring (A). Check that the sealing ring is not deformed or damaged and replace it if necessary. Carry out this procedure both for the inlet and outlet ports. 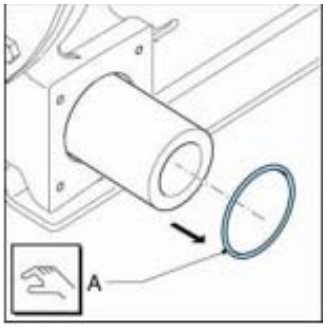
10	Connect the pump to the electrical supply.
11	Remove the hose (A) from the pump chamber by jogging the drive motor to push the hose out of the pump. The speed of the motor can be changed using the manual speed pot in the MCC room. 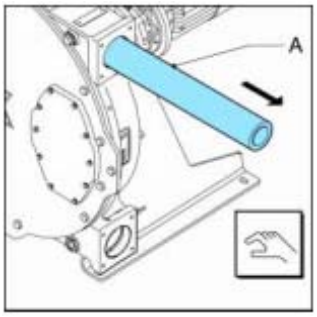
12	Insert new hose into the influent side of the pump.
13	Jog motor to move hose through pump. Use slow speed to move hose through pump. CAUTION: AT FULL SPEED, PUMP ROTATES QUICKLY. DO NOT STAND WITH FACE IN FRONT OF EFFLUENT AND ONLY JOG PUMP VERY BRIEFLY.
14	Replace pump parts by reversing above steps.

Procedure 6.5

Step	Changing Oil in Gearbox (Every 2500 Hours)
1	Isolate the pump from the electrical supply by turning off the lime recirc pump circuit breaker in the MCC room and locking with LOTO padlock.
2	Position a tray under the gearbox. Remove plug (A) and drain the gearbox.
3	The plug (A) is also a magnet so that any metal particles in the oil are pulled to the plug. Clean the plug and remove any metal particles. Check that the sealing ring is not damaged and replace it if necessary. Place the plug back in the gearbox and tighten it firmly. 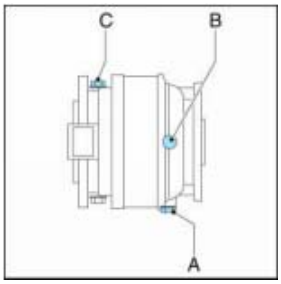
4	Remove level plug (B) and breather (C). Position a funnel in the hole of breather (C) and fill the gearbox with oil (see table below for specified product) until the oil just comes out of the level plug hole (B). Place plug (B) and plug (C) back and tighten them firmly.

Recommended lubricants for the Watson-Marlow Bredel planetary gearboxes*				
	-20 °C to 5 °C -4 °F to 41 °F IV 95 min	5 °C to 30 °C 41 °F to 86 °F IV 95 min	5 °C to 50 °C 41 °F to 122 °F IV 95 min	-30 °C to 65 °C -22 °F to 149 °F IV 165 min
ISO 3448	VG 100	VG 150	VG 320	VG 150 - 220
AGIP	Blasia 100	Blasia 150	Blasia 320	Blasia SX 220
ARAL	Drgol BG 100	Drgol BG 150	Drgol BG 220	Drgol PAS 220
BP	Energol GR-XP 100	Energol GR-XP 150	Energol GR-XP 320	Enersyn EXP 22O
CASTROL	Alphamax 100	Alphamax 150	Alphamax 320	Alphasyn PG150
ESSO	Spartan EP 100	Spartan EP 150	Spartan EP 320	Spartan SEP 220
Q8	Goya NT 100	Goya NT 150	Goya NT 320	El Greco 220
I.P.	Mellana 100	Mellana 150	Mellana 320	Telesia Oil 150
MOBIL	Mobilgear XMP 100	Mobilgear XMP 150	Mobilgear XMP 320	Mobilgear SHC XMP 220
SHELL	Omala oil 100	Omala oil 150	Omala oil 320	Omala HD 220
TOTAL FINA ELF	Carter EP 100	Carter EP 150	Carter EP 320	Carter SH 220
KLÜBER	Kluberoil GEM 1-150	Kluberoil GEM 1-150	Kluberoil GEM 1-320	Klubersynth EG 4-220
TEXACO	Meropa 100	Meropa 150	Meropa 320	Pinnacle EP

5	Switch on the electrical supply to the pump.

Tools/Supplies

Funnel	Tray	Wrench
Needle nose Pliers	Hammer	Extraction Tool

Procedure 6.6

Step	Replacing Pump Seal and Wear Ring (If Necessary)
1	Remove the pump hose (refer to above procedure).
2	Isolate the pump from the electrical supply by turning off the lime recirc pump circuit breaker in the MCC room and locking with LOTO padlock.
3	Use lifting hole (D) to move the cover. Remove the cover (B) by loosening the retaining bolts (A). Check the sealing ring (C) of the pump cover for damage. 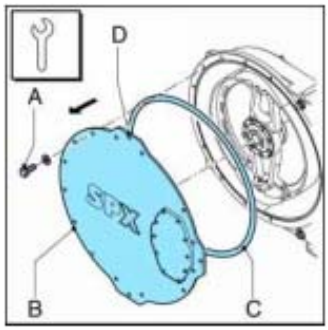
4	Remove the retaining bolts (A) of the drive shaft (B) and remove the drive shaft. Check the sealing ring (C) for damage and replace if necessary. 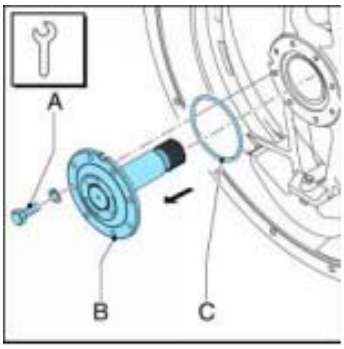

5	Remove the rotor retaining circlip (A), which locks the rotor on the hub. Use needle-nose pliers. 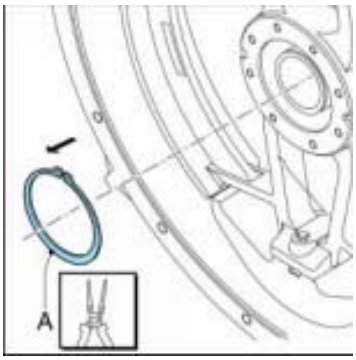
6	Extract the rotor (A) from the hub. A suitable puller or similar extraction tool will be required during this stage of the disassembly. 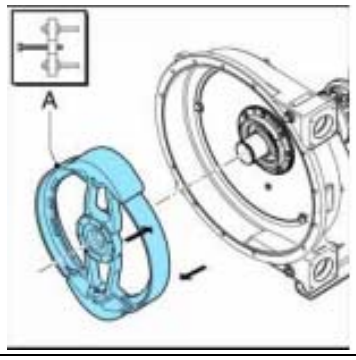
7	Remove the seal (A) from the hub (B). Clean the bore. 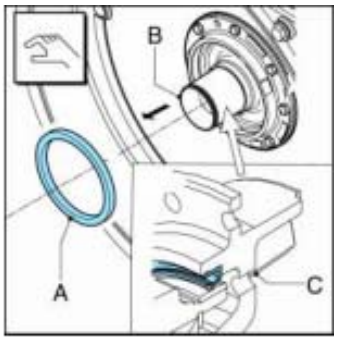
8	Fit a new seal using a wooden block and hammer. Carefully hit the seal crosswise and with equal strength in the bore until it touches the hub. The seal must be fitted in the correct orientation (C). Make sure that the open side points to the pump cover.

9	Support the rotor with wooden blocks at 90° to the spokes, with the ring (A) facing down. Position a punch against the rear of the glued wear ring. Prevent damage to the wear ring seat or other parts. 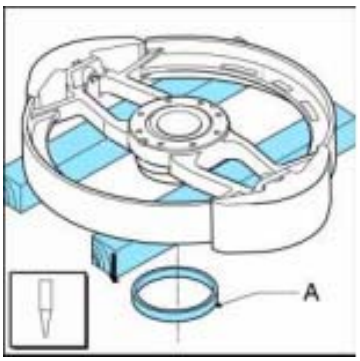
10	Turn the rotor over. Make sure that the seats of the new wear ring (A) and rotor are clean, dry and free of grease. Apply Loctite® type 641 or 603 both on the rotor and the wear ring. Position the new wear ring with the tapered edge facing up. Use a plastic hammer to fit the ring on the rotor until it touches the rotor completely. 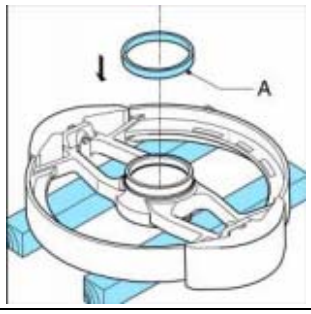
11	Check that the hub is clean and free of grease. Fit rotor (A). The bearings have been placed on the hub with a slight interference fit. Use a pressing tool to press the rotor on the hub. 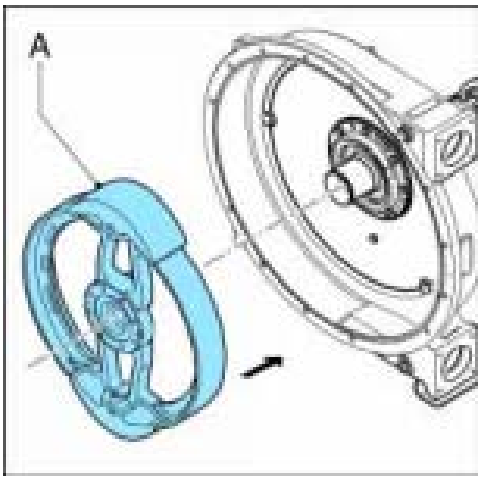

12	Check rotor retaining circlip (A) for any signs of damage and replace if necessary. Refit the circlip. Use needle-nose pliers for this purpose. 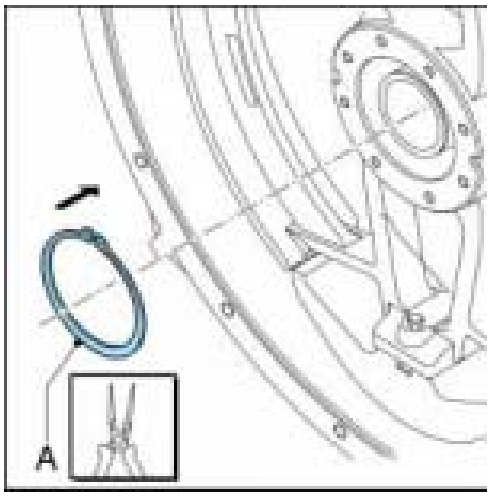
13	Heavily grease the spline (D) of the drive shaft (B) with a graphite-loaded grease. Ensure the mating faces of the drive shaft and rotor are clean, dry and free from lubricant. Check that the sealing ring (C) is not damaged and replace it if necessary. Fit the sealing ring in the groove of the shaft flange. Fit the drive shaft. Turn the rotor until the bolt holes in the drive shaft correspond with the threaded holes in the rotor. Mount the retaining bolts (A) of the drive shaft. Tighten the bolts finger-tight. Tighten them diagonally opposite to each other to the specified torque limits (see figure 2, below). 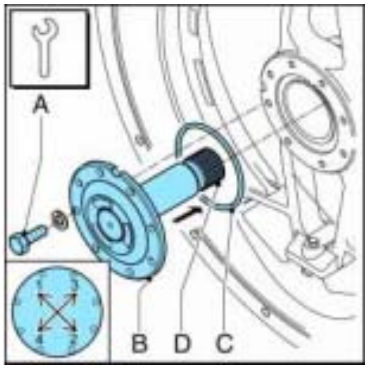
14	Replace the cover and fasten the retaining bolts with the correct torque (see figure 2, below)
15	Switch on the electrical supply to the pump.
16	Fit the (new) pump hose (see procedure above).

Figure 2: Specified Torque Amounts

Pos	Description	Unit	SPX40	SPX50	SPX65	SPX80	SPX100
A	Pressing shoe bolt(s)	Nm	59	103	103	250	250
		lbs in	522	911.6	911.6	2212.5	2212.5
B	Inspection window bolts	Nm	5	8	8	8	8
		lbs in	44.25	70.8	70.8	70.8	70.8
C	Cover bolts	Nm	50	85	210	210	400
		lbs in	442.5	752.25	1858.5	1858.5	3540
D	Hose clamp	Nm	25	40	40	40	40
		lbs in	221.25	354	354	354	354
E	Flange bracket bolts	Nm	25	50	50	85	85
		lbs in	221.25	442.5	442.5	752.25	752.25
F	Drive shaft bolts	Nm	25	50	85	210	210
		lbs in	221.25	442.5	752.25	1858.5	1858.5

Pos	Description	Unit	SPX40	SPX50	SPX65	SPX80	SPX100
G	Hub bolts	Nm	50	50	85	210	210
		lbs in	442.5	442.5	752.25	1858.5	1858.5
H	Support bolts	Nm	50	50	85	210	210
		lbs in	442.5	442.5	752.25	1858.5	1858.5
I	Gearbox bolts	Nm	25	85	85	85	135
		lbs in	221.25	752.25	752.25	752.25	1194.75

Pos	Description	Thread, A/F				
		SPX40	SPX50	SPX65	SPX80	SPX100
A	Pressing shoe bolt(s)	M10 17 mm	M12 19 mm	M12 19 mm	M16 24 mm	M16 24 mm
B	Inspection window bolts	M6 10 mm	M8 13 mm	M8 13 mm	M8 13 mm	M8 13 mm
C	Pump cover bolts	M10 17 mm	M12 19 mm	M16 24 mm	M16 24 mm	M20 30 mm
D	Hose clamp	M8 13 mm	M10 17 mm	M10 17 mm	M10 17 mm	M10 17 mm
E	Flange bracket bolts	M8 13 mm	M10 17 mm	M10 17 mm	M12 19 mm	M12 19 mm
F	Drive shaft bolts	M8 13 mm	M10 17 mm	M12 19 mm	M16 24 mm	M16 24 mm
G	Hub bolts	M10 17 mm	M10 17 mm	M12 19 mm	M16 24 mm	M16 24 mm
H	Support bolts	M10 17 mm	M10 17 mm	M12 19 mm	M16 24 mm	M16 24 mm
I	Gearbox bolts	M8 13 mm	M12 19 mm	M12 19 mm	M12 19 mm	M14 22 mm

Procedure 6.7

Step	Replacing The Pressing Shoes (When there is visible wear on the surface)
1	Jog the motor from the MCC (requires two people) until the pressing shoe (B) is positioned in view of the inspection window (A). 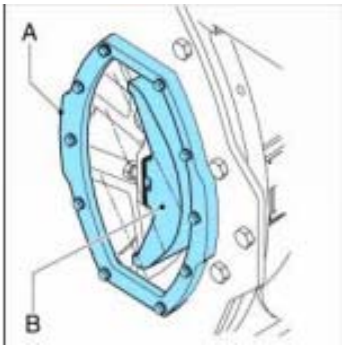
2	Isolate the pump from the electrical supply by turning off the lime recirc pump circuit breaker in the MCC room and locking with LOTO padlock
3	Place a tray (A) under the drain plug (B) in the bottom of the pump head. Remove the drain plug. Drain as much lubricant until the level has lowered just below the inspection window (D). Check that the sealing ring (C) is not damaged and replace it if necessary. Position the drain plug and tighten it firmly. 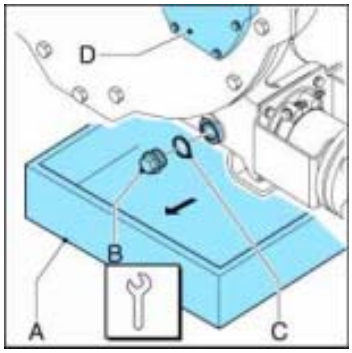
4	Loosen the retaining bolts (A) of the inspection window (B) and remove the bolts. Remove the inspection window. Care must be taken not to damage the gasket (C). 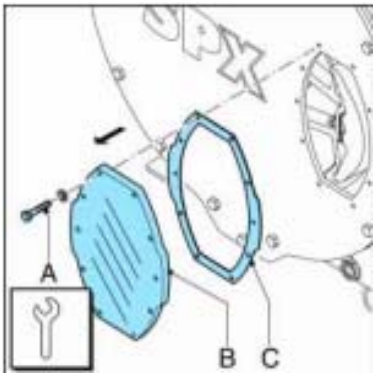

5	Loosen the retaining bolt(s) (A) of pressing shoe (B) a few turns. Remove the shims (C) if present. Loosen the retaining bolt(s) (A) of pressing shoe (B) completely and remove the pressing shoe. 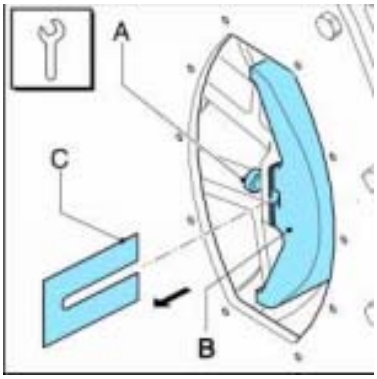
6	Position the (new) pressing shoe (A), check that the NordLock®-rings (B) have been positioned correctly and tighten the retaining bolt(s) a few turns. 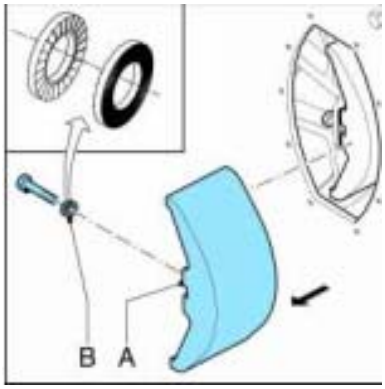
7	Fit the removed shims (A) again. Tighten the retaining bolt(s) (B) with the correct torque (see figure 2). 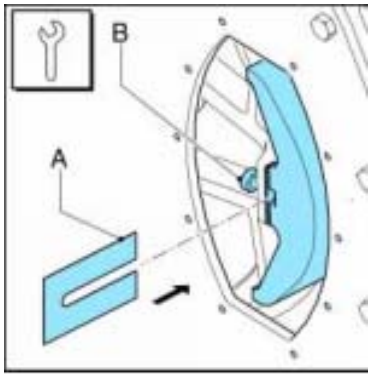

8	Refit the inspection window (B). Check the inspection window gasket (C) for damage and replace if necessary. Make sure that all bolts (A) are refitted and that they are tightened in the correct order, diagonally opposite each other. 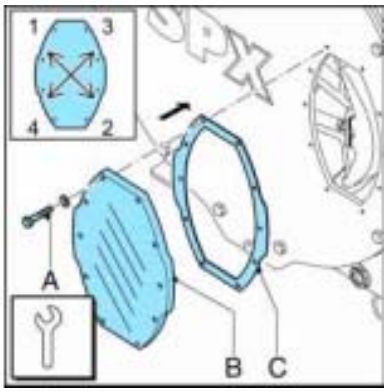
9	Switch on the electrical supply.
10	Jog the motor until the second pressing shoe is positioned in front of the inspection window.
11	Isolate the pump from the electrical supply.
12	Repeat the procedure for removing and fitting this second pressing shoe by repeating steps 4 through 9.
13	Refill the lubricant. Refer to procedure above.

Procedure 6.8

Step	Replacing Bearings (If Necessary)
1	Dismount the pump hose, the cover and rotor by following steps 1 through 6 from hose removal procedure above.
2	Lay the rotor on a flat surface with the wear ring face up. Remove retaining circlip (A) with the correct tools. 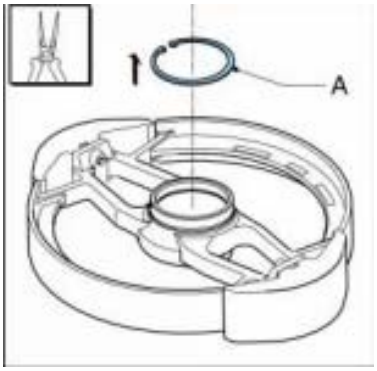

3	Turn the rotor over. Remove using the correct pressing tools, first the first bearing (C), the spacer ring (B) and the second bearing (A) from the rotor. Check the spacer ring for damage. Retain the spacer ring (B). 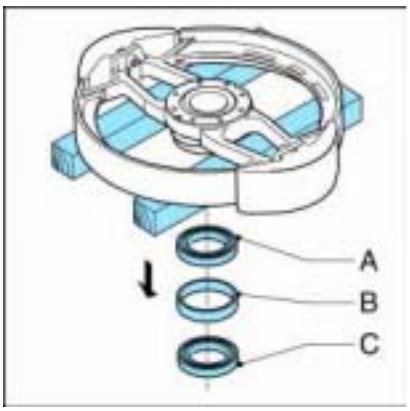
4	Turn the rotor over. Check that the hub is clean and dry. Press using the pressing tool the first bearing (C) in its place. Position the spacer ring (B). Subsequently press the second bearing (A) in its place. 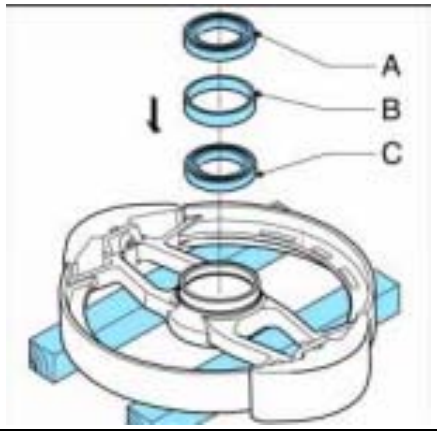
5	Refit the retaining circlip (A) in the rotor. Use the correct tools for this purpose. 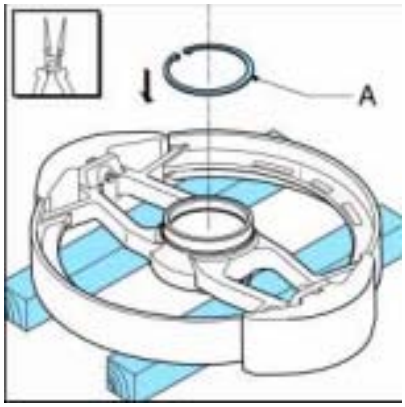
6	Fit the rotor, the cover and pump hose by following steps 11 through 16 from the hose replacement procedure above.

7.0 LIME DELIVERY

Critical Information

Lime will be ordered for delivery to the site only when the level in the slurry tank dips to the low level. Operations personnel must be certain sufficient capacity is present in the lime slurry tank to receive and store the volume of lime slurry ordered. Enough capacity in the tank must be present to dilute the lime to a specific gravity of 1.13 to ensure lime is not too thinck to run through system components. An Operator must be present to receive lime slurry. All deliveries of lime slurry must be done with the truck parked on the lime delivery pad and delivery hoses connected through the Environbox located on the north side of the building.

Personal Protective Equipment

Safety Glasses	Latex or Nitrile Gloves
Steel Toe Boots (Leather or Rubber)	

Equipment Needed

Gate and Environbox keys	Clean water hose and connection fittings

Procedure

Step	Lime Delivery
1	Obtain and initiate a Lime Delivery Checklist to document compliance with this procedure and to record the volume of lime slurry delivered.
2	Inspect delivery truck for oil leaks, chemical leaks, and general cleanliness. If any leakage or other condition of the truck may contaminate the parking area or Lime Delivery Pad, reject delivery. Inspect driving/parking area for contamination from delivery truck. Prepare written and photographic documentation of any contamination noted.
3	Notify other onsite personnel of incoming delivery.
4	Read and record the lime slurry level in the lime slurry storage tank prior to commencing delivery.
5	Inspect and clear delivery area of any obstructions and/or debris prior to truck entry to Lime Delivery Pad.
6	Open the gates in the fencing north of the treatment building to allow the delivery truck to safely back the truck onto the lime delivery pad.
7	Close drain valve in the sump at the eastern end of the lime delivery pad.

8	Operator shall unlock Environbox and inspect Environbox. Gate valve in lime delivery line should be closed until attaching delivery hose. Drain ball valve for the Environbox housing must be closed to commence delivery.
9	Operator shall inspect truck to confirm chocks are in place and as truck driver to confirm vehicle has been secured. Truck driver shall attach the lime delivery hose to the delivery truck and the Environbox inlet. Truck driver to place drip pan to collect drips or leakage from all connections outside the Environbox.
10	Operator shall double check hose connections, drip pan placement, and valve positions in lime delivery pad sump and Environbox prior to commencing delivery.
11	Operator shall open gate valve in Environbox and notify truck driver to begin lime slurry delivery. Operator to immediately inspect lime delivery hose and connections for leakage. If leakage is seen from hose or connections, truck driver will be notified to stop transfer. Personnel must exercise caution around delivery lines.
12	Operator shall observe lime storage tank from mezzanine during delivery to check for proper flow conditions and absence of splashing of lime slurry outside of storage tank. Any splashing outside of the storage tank shall be cleaned up by the Operator immediately after delivery is completed.
13	For normal delivery, the truck driver shall empty the truck into the storage tank and then shall notify the Operator. Provide clean water hose to truck driver to rinse the truck (approximately 200 gallons of clean water). Rinse water shall be pumped into the lime slurry storage tank by the driver. Alternatively, compressed air may be used to clear the delivery trucks' lines and storage tank.
14	If the high level alarm in the lime slurry storage tank is activated during lime delivery, the Operator shall immediately have the truck driver stop the lime delivery. If delivery is stopped due to high storage tank level, the truck driver will not be allowed to rinse the truck. THIS SHOULD NEVER HAPPEN. Make sure to verify the capacity of the tank prior to delivery and notify the driver of the maximum amount of lime the plant may accept.
15	After delivery of lime slurry is complete, Operator shall close the lime delivery line gate valve inside the Environbox.
16	The truck driver shall remove the delivery hose from Environbox and truck, preventing spillage or leakage from the hose or connectors.
17	Operator shall check and record lime storage tank level to confirm volume of delivered lime prior to approving delivery paperwork for truck driver.
18	Operator shall inspect the Environbox and lime delivery pad for spillage or leakage prior to the delivery truck leaving the lime delivery pad. Any materials spilled onto the lime delivery pad must be cleaned up as described in Section 8 of this procedure prior to movement of the truck from the delivery pad.
19	After determining the lime delivery pad is clean of lime spills, Operator shall authorize the truck driver to drive from the lime delivery pad and leave the site.

20	If lime spillage has occurred inside the Environbox, Operator shall immediately clean Environbox by washing the box with clean water and a brush. Wash water shall be collected by connecting a hose to the the Environbox drain valve and collecting wash water in a plastic bucket. Wash water collected in the bucket shall be placed in the lime storage tank by the Operator.
21	Connect the clean water hose to the 3/4” ball valve inside the Environbox to flush the lime delivery pipe into the lime storage tank. Maintain the flush water at fully open flow for approximately 30 seconds. Close ¾” ball valve and disconnect clean water hose after flushing is complete.
22	After determining that the lime delivery pad and Environbox are clean of lime spills as described in Procedure 8.2, Operator shall close all Environbox valves, lock Environbox, and open the sump gate valve for the lime delivery pad to allow storm water to flow from the sump.
23	Operator shall check lime tank, recirculation system, and lime feed system for proper conditions and proper operation.
24	Complete, sign, date, and file the Lime Delivery Log (attached) to document lime delivery.

8.0 SPILL RESPONSE AND CLEANUP

Critical Information

Lime is a corrosive chemical that can cause skin and eye irritation and can cause adverse environmental impacts if released to the environment. Caution must be exercised to avoid direct contact with lime during spill response and cleanup. Actions should be taken to control or mitigate spills or releases to the environment outside the building or lime delivery pad.

Personal Protective Equipment

Safety Glasses	Latex or Nitrile Gloves
Chemical/Water Resistant Boots	Hard Hat
Protective coveralls	

Equipment Needed

Clean water hose	Sampling equipment
Brushes/brooms	

Procedure 8.1

Step	Spill Response and Cleanup Inside Building
1	Lime slurry will dry and solidify within about a day after it is spilled. Spills should be cleaned up immediately after a spill to simplify cleanup and minimize lime residue that may remain after cleanup.

2	If a lime spill occurs in the secondary containment area that is of a size manageable with the wet vacuum on site, vacuum up the lime slurry with the wet vac. Ensure that the wet vac is empty of fluids and has been decontaminated before use.
3	After removal of the lime slurry, the area affected by the spill should be triple rinsed with clean water. Rinse water should be collected using the wet vac.
4	If the spilled lime and rinse water has not been contaminated by other chemicals, the recovered materials can be recycled to the lime storage tank from the wet vac after spill cleanup.
5	If the spilled lime and rinse water has been contaminated by other chemicals, the recovered materials must be characterized and disposed in accordance with applicable regulations using an appropriate commercial disposal contractor.
6	If the lime spill has dried and solidified, clean the floor of the secondary containment area by scraping the hardened lime, sweeping up the residue, and rinsing the spill area with clean water. Rinse water is to be collected using the wet vac.
7	If the spill is too large for a wet vacuum, a commercial cleanup and disposal service must be contracted to remove the lime slurry and rinse water using vacuum truck. Be sure to tell the provider the amount and type of chemical. Confirm that the vac truck has been cleaned and the tank materials are compatible with lime.

Procedure 8.2

Step	Lime Delivery Pad Spill Response and Cleanup
	Spills to the lime delivery pad must be cleanup up immediately to minimize contamination of rain water collected within the Lime Delivery Pad. The pad must be cleaned before the delivery truck can be allowed to leave the pad. The Lime Delivery Pad sump must be cleaned after the lime delivery truck has left the site and before opening the sump discharge valve.
1	If the spill to the Lime Delivery Pad is not fully contained by the curbing around the Lime Delivery Pad and sump, the Operator's Supervisor and the Spill Response Coordinator must be contacted immediately and the spill response and reporting procedures described in Section 7 of the O&M Manual must be implemented.
2	Spills of lime slurry to the Lime Delivery Pad are to be cleaned by washing the spilled lime slurry to the sump using clean water. If necessary, brushes should be used to remove spilled lime. Cleaning should continue until there is no visible evidence of lime.
3	A commercial vacuum truck and waste disposal service must be contracted to remove water and lime from the Lime Delivery Pad sump.

4	After removal of the spill cleanup materials from the sump, the sump must be rinsed with clean water, and all rinse water must be collected by the vacuum truck. Rinsing must be repeated until a sample of water collected from the sump has a pH greater than 6.5 and less than 8.5. Samples are to be analyzed for pH using the laboratory pH meter and in accordance with analytical methods specified in the NPDES permit.
5	The sump will be considered clean after the sump water pH is between 6.5 and 8.5. The gate valve in the sump should be opened when the sump has been cleaned in accordance with this procedure.

9.0 LIME SLURRY SPECIFIC GRAVITY TESTING

Critical Information

The lime slurry within the storage tank must be maintained at a specific gravity below approximately 1.15. The slurry specific gravity must be sampled, tested, and diluted as necessary by plant operators to maintain the proper density. Lime is a corrosive chemical that can cause skin and eye irritation and must be handled in accordance with the HASP and the procedure described below.

Equipment Needed

1L Beaker or Bucket	1 L Graduated Cylinder
Laboratory Scale	

Personal Protective Equipment

Safety Glasses	Latex or Nitrile Gloves
Chemical Resistant Boots	Hard Hat

Procedure

Step	Specific Gravity Testing
1	Tare a 1L graduated cylinder on the laboratory scale. Record cylinder weight in kilograms and the Lime Density Testing Log Sheet.
2	Collect a sample (approximately 0.5 - 1 L) of lime slurry into the graduated beaker or bucket. The slurry can be collected via the gate valve at the peak of the lime line on the second story walkway. Caution must be exercised to avoid splashing when sampling. Any spillage must be immediately cleaned up.
3	Transfer at least 0.5 L of slurry to the tared graduated cylinder. Record the volume on the Lime Density Testing Log Sheet
4	Weigh the graduated cylinder and lime slurry on the laboratory scale. Record the weight in kilograms on the Lime Slutty Monitoring Log Sheet.

5	Calculate the specific gravity (SG) of the lime slurry as follows: SG = [Wt, cylinder & slurry (kg) – Wt. cylinder (kg)] \ Slurry Vol. (L) Record the calculated SG on the Lime Density Testing Log Sheet to 2 decimal places. (e.g., 1.18)
6	If the specific gravity of the slurry is below 1.15, the density is acceptable. If the SG is greater than 1.15, it must be adjusted as described below.
5	If the lime slurry specific gravity is above 1.15, calculate the amount of water that must be added to the lime slurry mix to adjust the specific gravity to 1.13.
6	The lime tank is 9' in diameter and 12' high. Calculate the volume of lime slurry in the tank by multiplying the area (63.6 square feet) times the height of the fluid indicated by the liquid level sensor. Be sure to convert the liquid height from inches to feet.
7	Calculate the amount of fresh water to add to dilute to the target SG: 1. Read the concentration of $Ca(OH)_2$, C_1, from Table 1 below corresponding to the initial SG (SG_1) of the slurry. 2. Read the concentration of $Ca(OH)_2$, C_2, from Table 1 below corresponding to the final SG after dilution (SG_2). 3. Determine the initial slurry volume, V_1, from the tank level. Final Volume = $V_2 = (C_1/C_2) \times V_1$ Water to add = $\Delta V = V_2 - V_1$
8	Add the calculated volume of water by watching the level sensor rise in accordance with Table 2 below. Water to be added using the hose and the non-potable water tap.
9	Confirm the final specific gravity (steps 1-3) of the lime slurry mixture after at least a half hour of mixing.
10	Record results of all measurements and water additions on the "*Lime Slurry Monitoring Log*" (Attachment P-320B).

Table 1
Lime Slurry Specific Gravity and Concentration

Specific Gravity	$Ca(OH)_2$ (lb/gal)	Specific Gravity	$Ca(OH)_2$ (lb/gal)
1.01	0.13	1.16	2.23
1.02	0.27	1.17	2.38
1.03	0.41	1.18	2.52
1.04	0.55	1.19	2.66
1.05	0.69	1.2	2.81
1.06	0.82	1.21	2.95
1.07	0.96	1.22	3.09
1.08	1.10	1.23	3.24
1.09	1.24	1.24	3.38
1.1	1.38	1.25	3.53
1.11	1.53	1.26	3.67
1.12	1.67	1.27	3.82
1.13	1.81	1.28	3.96
1.14	1.95	1.29	4.11
1.15	2.09	1.3	4.25

Table 2
Lime Slurry Tank Volume Chart

Tank Level (ft)	Volume (gal)	Tank Level (ft)	Volume (gal)	Tank Level (ft)	Volume (gal)
10.5	4,996	7.3	3,474	4.1	1,951
10.4	4,949	7.2	3,426	4.0	1,903
10.3	4,901	7.1	3,379	3.9	1,856
10.2	4,854	7.0	3,331	3.8	1,808
10.1	4,806	6.9	3,283	3.7	1,761
10.0	4,759	6.8	3,236	3.6	1,713
9.9	4,711	6.7	3,188	3.5	1,665
9.8	4,663	6.6	3,141	3.4	1,618
9.7	4,616	6.5	3,093	3.3	1,570
9.6	4,568	6.4	3,045	3.2	1,523
9.5	4,521	6.3	2,998	3.1	1,475
9.4	4,473	6.2	2,950	3.0	1,428
9.3	4,425	6.1	2,903	2.9	1,380
9.2	4,378	6.0	2,855	2.8	1,332
9.1	4,330	5.9	2,808	2.7	1,285
9.0	4,283	5.8	2,760	2.6	1,237
8.9	4,235	5.7	2,712	2.5	1,190
8.8	4,188	5.6	2,665	2.4	1,142
8.7	4,140	5.5	2,617	2.3	1,094
8.6	4,092	5.4	2,570	2.2	1,047
8.5	4,045	5.3	2,522	2.1	999
8.4	3,997	5.2	2,474	2.0	952
8.3	3,950	5.1	2,427	1.9	904
8.2	3,902	5.0	2,379	1.8	857
8.1	3,854	4.9	2,332	1.7	809
8.0	3,807	4.8	2,284	1.6	761
7.9	3,759	4.7	2,237	1.5	714
7.8	3,712	4.6	2,189	1.4	666
7.7	3,664	4.5	2,141	1.3	619
7.6	3,617	4.4	2,094	1.2	571
7.5	3,569	4.3	2,046	1.1	523
7.4	3,521	4.2	1,999	1.0	476

10.0 MIXER MAINTENANCE AND INSPECTION

Critical Information

Preventative maintenance should be performed on the lime tank mixer according to the timeline in the procedure below. Operators should continually monitor sounds and vibrations, documenting changes.

Tools/Supplies

Wrench	Screwdrivers

Personal Protective Equipment

Safety Glasses	Nitrile Gloves
	Steel Toe Boots (Leather or Rubber)

Procedure

Step	Lime Storage Tank Mixer PMSL 4040 (Weekly/2500 Hours)
1	Inspect mixer for unusual sounds, excessive vibration, excessive heat, or grease leakage.
2	Check oil level weekly. The mixer must be off to perform the check. Record level and add oil as necessary.
3	Every 2500 hours of operation, the oil in the mixer must be changed. The recommended type of lubricant is Extreme Pressure meeting ANSI/AGMA 9005. See PMSL 4040 manual for a list of acceptable lubricants.
4	Lock out and tag out power source before beginning.
5	Drain oil in mixer drive. Take necessary precautions when handling hot oil.
6	Flush the mixer drive housing thoroughly after the original oil has been drained.
7	The mixer drive can be filled in two places: the fill plug or the breather.
8	Remove the fill plug or breather and wipe clean.
9	Fix mixer drive with recommended lubricant until level is at the “F” line scribed on the dipstick. Make sure dipstick is fully seated for determining measurement. Or, if using oil sight glass window, fill until level is at mid-point of the window. Do not under fill or over fill.
10	Replace fill plug or breather.

11	Add grease to all bearings, couplings, and seals.
12	Inspect impeller for evidence of erosion or corrosion.
13	Check hardware tightness. Re-torque mixer to original specifications. See PMSL 4040 manual for torque values.

LIME DELIVERY LOG

B&L Woodwaste Site
Pierce County, Washington

DATE: _____ Start Time:_____ End Time:_____

LIME SLURRY STORAGE VOLUME

Initial Level _____ ft Final Level _____ ft

Initial Vol.: _____ gal. (see cap. chart, pg. 2) Final Vol.: _____ gal. (see cap. chart, pg. 2) Delivered Vol: _____ gal.

DELIVERY CHECKLIST

		COMPLETE
1	Inspect truck for oil leaks and condition before entering delivery pad.	_____
2	Log initial lime storage tank level	_____
3	Close Lime Delivery Pad sump drain valve.	_____
4	Unlock, inspect Environbox, confirm valve setup per procedure.	_____
5	Confirm truck is secured in lime delivery pad, including chocks & brakes.	_____
6	Check lime delivery hose connections prior to lime delivery.	_____
7	Confirm lime delivery hose has been disconnected.	_____
8	Log final lime storage tank level after delivery and truck rinse are complete.	_____
9	Inspect Lime Delivery Pad and confirm no lime spillage or leakage is present.	_____
10	Flush lime delivery line with clean water.	_____
11	Inspect Environbox and confirm no lime spillage or leakage is present.	_____
12	Close Environbox valves, lock Environbox.	_____
13	Open sump drain valve for the Lime Delivery Pad.	_____
14	Inspect lime storage and feed system operations.	_____

OPERATOR NAME: _____ _____
Operator Signature

Lime Storage Tank Capacity Chart

B&L Woodwaste Site
Pierce County, Washington

Level (in)	Volume (gal)	Level (in)	Volume (gal)	Level (in)	Volume (gal)
12	476	49	1,943	86	3,410
13	516	50	1,983	87	3,450
14	555	51	2,022	88	3,490
15	595	52	2,062	89	3,529
16	634	53	2,102	90	3,569
17	674	54	2,141	91	3,609
18	714	55	2,181	92	3,648
19	753	56	2,221	93	3,688
20	793	57	2,260	94	3,728
21	833	58	2,300	95	3,767
22	872	59	2,340	96	3,807
23	912	60	2,379	97	3,847
24	952	61	2,419	98	3,886
25	991	62	2,459	99	3,926
26	1,031	63	2,498	100	3,965
27	1,071	64	2,538	101	4,005
28	1,110	65	2,578	102	4,045
29	1,150	66	2,617	103	4,084
30	1,190	67	2,657	104	4,124
31	1,229	68	2,697	105	4,164
32	1,269	69	2,736	106	4,203
33	1,309	70	2,776	107	4,243
34	1,348	71	2,815	108	4,283
35	1,388	72	2,855	109	4,322
36	1,428	73	2,895	110	4,362
37	1,467	74	2,934	111	4,402
38	1,507	75	2,974	112	4,441
39	1,547	76	3,014	113	4,481
40	1,586	77	3,053	114	4,521
41	1,626	78	3,093	115	4,560
42	1,665	79	3,133	116	4,600
43	1,705	80	3,172	117	4,640
44	1,745	81	3,212	118	4,679
45	1,784	82	3,252	119	4,719
46	1,824	83	3,291	120	4,759
47	1,864	84	3,331	121	4,798
48	1,903	85	3,371	122	4,838

Diameter 108 inches

LIME SLURRY MONITORING LOG

Groundwater Treatment Plant
B&L Woodwaste Site
Milton, WA

	Time	Grad. Cylinder Tare (kg)	Cylinder & Slurry Weight (kg)	Slurry Volume (L)	Calc. Specific Gravity	Target Specific Gravity	Initial Slurry Volume (gal)	Initial $Ca(OH)_2$ Conc. (lb/gal)	Target $Ca(OH)_2$ Conc. (lb/gal)	Water Added (gal)	Operator Initials
Date:											
Initial Slurry											
Final Slurry											
Date:											
Initial Slurry											
Final Slurry											
Date:											
Initial Slurry											
Final Slurry											
Date:											
Initial Slurry											
Final Slurry											
Date:											
Initial Slurry											
Final Slurry											
Date:											
Initial Slurry											
Final Slurry											
Date:											
Initial Slurry											
Final Slurry											

STANDARD OPERATION PROCEDURES:
B&L WOODWASTE GROUNDWATER TREATMENT SYSTEM
PROCEDURE 326 – COAGULANT FEED SYSTEM
B&L Woodwaste Landfill
Milton, Washington

In This Procedure

Following is a list of topics in this Procedure:

1.0 SAFETY CONSIDERATIONS

Health and Safety Plan (HASP)

The HASP maintained in the treatment building provides plans and requirements to protect the health and safety of workers involved in the operation and maintenance of the groundwater extraction and treatment system. All workers must be familiar with and sign the HASP. Specific requirements for Personal Protective Equipment (PPE) are included in the HASP. If there are any discrepancies between PPE requirements included in these procedures and PPE requirements specified in the HASP, the requirements specified in the HASP shall be followed.

Level of Hazard

Medium

Coagulant will cause irritation if it comes in contact with skin. Caution should be maintained and proper PPE donned before working with the coagulant feed system.. There are also electrical components acting in the system which necessitate proper lockout/tagout prior to maintenance. Due to the presence of dangerous waste within the closed landfill, all personnel working at the site must be fully trained in accordance with 29 CFR 1910 and WISHA regulations. Forty-hour Hazardous Waste Operations Training with yearly eight hour refresher training is required for anyone performing work at the B&L Woodwaste Site.

2.0 NORMAL OPERATION

Critical Information	The coagulant feed system utilizes a Prominent Gamma/L dosing pump and pulls from a 55-gallon drum of an iron based chemical.

Personal Protective Equipment

Safety Glasses	Nitrile Gloves
Steel Toe Boots (Leather or Rubber)	

Procedure

Step	Normal Startup
1	The coagulant dosing pump frequency is controlled by the onsite PLC. There is an option on the PLC for “coagulant dosing ratio” which may be set by the operator (normally in the ~34,000 range) to control the pump frequency.
2	The PLC will use the influent flowmeter to control how quickly coagulant is pumped from the 55-gallon drum into the co-precip tank.
3	It is the plant operator’s duty to check the amount of coagulant in the pail on a daily basis. If the level is getting low, the pail must be replaced.
4	There should always be an extra drum of coagulant onsite. The operator should check weekly for a spare and document findings on the weekly plant checklist. Then a new drum should be ordered if necessary.

Procedure

Step	Normal Shutdown
1	The coagulant system will automatically stop dosing when the plant stops running.

3.0 DOSING PUMP OPERATION AND MAINTENANCE

Critical Information	The coagulant dosing pump is a ProMinent Gamma/L dosing pump. The procedures below are for the proper dosing of coagulant to the co-precipitation tank, where water is dosed to promote flocculation.

Personal Protective Equipment

Goggles	Rubber Gloves
Rubber Jacket and Sleeves	Rubber Pants

Operating Information

Set stroke length
Stroke length is continually adjustable within a range of 0 - 100%.
The recommended stroke length range for best reproducibility is 30 - 100%.

The following operating options are available via the different keys:

Stop/Start pump
To stop gamma/ L: press STOP/START key.
To start gamma/ L: press STOP/START key.

Load factory settings
Press the P key for 15 s only if you wish to load factory calibration settings! Current settings will be deleted. Before doing this, be sure to record the current settings for future reference.

Change to settings mode
When you press the P key for 2 s in any continuous display, the gamma/ L will change to settings mode. If CODE 1 is set, the code must be entered after pressing the P key.

Check adjustable values
Each time you press the ”i” key you will see a different continuous display. The number of continuous displays depends upon the identity code, the selected operating mode and the connected accessories.

Change directly alterable values
To change a value (see below) directly in the corresponding continuous display, press one of the arrow keys until “set” appears in the LCD display. The delay has been programmed in to prevent inadvertent changing of values. If CODE 2 has been set, this code must be entered after pressing the arrow key. Directly alterable values are as follows:

Stroke rate
In “manual”, “contact” and “batch” operating modes: The stroke rate can be altered in the “stroke rate” display.

Operating Information

Priming
The “priming” function is activated by pressing both arrow keys at the same time in the “Stroke rate” permanent display. This causes the pump to run at maximum speed for a short period of time.

Cancel error
Error messages are cancelled by pressing the P key briefly.

Display program versions
Press on the P key for 10 seconds to display the programme versions.
Example: “V 1052“ + X 1010“.
Release the key on “LOAD 3“ immediately after batch size has been reset.

Procedure

Step	Pump Maintenance (Perform Quarterly)
1	The Gamma / L pump should be inspected quarterly while it is operating. USE CAUTION WHEN OPERATING ON COAGULANT DOSING PUMPS. PREVENT ANY CHEMICAL CONTACT WITH SKIN. Wear rubber gloves and rubber pants/jacket when maintaining the pump.
2	The parts of the dosing pump are shown below. The coagulant is pumped through the “liquid end” of the pump by the diaphragm. 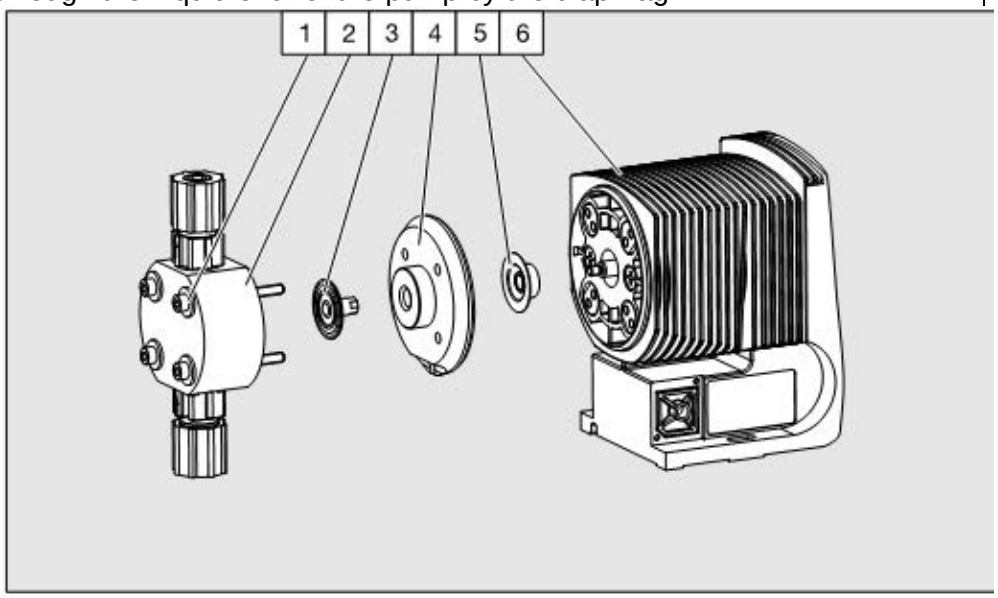 Fig. 21 1 Screws 2 Liquid end 3 Diaphragm 4 Top plate 5 Safety diaphragm 6 Pump housing

3	Check for chemical seepage at vent hole on the pump housing. If there is chemical seepage, tighten the connection… 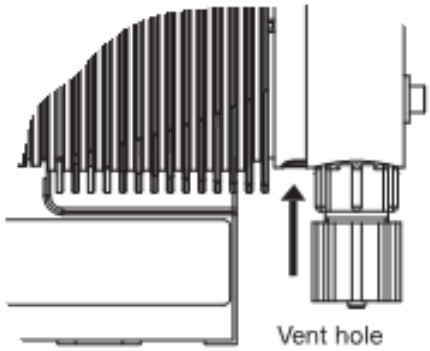
4	Check that the discharge tubing is connected firmly to the liquid end.
5	Check that discharge and suction valves are firmly fixed.
6	Check that the liquid end is generally watertight
7	Check for correct feed: run the dosing pump for a short period. To do this manually, press both arrow keys together.
8	Check electrical connections for wear.
9	Check that liquid end screws are fastened tightly.

Procedure

Step	Inspecting and Changing the Diaphragm (Every 6 Months)
1	Empty the liquid end (turn the unit upside down and let the feed chemical run out, rinse with water thoroughly.)
2	When the pump is running set the stroke length to 0% (the drive axis is then set).
3	Switch off the pump.
4	Unscrew the hydraulic connectors from the discharge and suction side of the liquid end.
5	Remove the four screws on the liquid end of the dosing pump.
6	Loosen the liquid end and the top plate from the pump housing - loosen only!
7	Hold the housing in one hand and with the other, clamp the diaphragm between the liquid end and the top plate. Then release the diaphragm from the drive spindle with a light anticlockwise turn of the liquid end and top plate.
8	Unscrew the diaphragm completely from the drive spindle.
9	Remove the top plate from the housing.
10	Check the condition of the safety diaphragm and replace if necessary.
11	Push the safety diaphragm only as far onto the drive axis until it lies flat on the pump housing – no further!

12	Screw the new diaphragm carefully up to the stop on the drive axis – this must be exact to ensure correct metering!
13	Screw the diaphragm tight once more.
14	Position the top plate on the pump housing. CAUTION - The leakage hole must point downwards when the pump is fully assembled.. Also, do not distort the top plate on the pump housing, otherwise the safety diaphragm will not fit.
15	Lay the diaphragm into the top plate.
16	Hold the top plate and screw the diaphragm in a clockwise direction until it is firmly in position (you will feel the resistance of the return spring). CAUTION - Do not overtighten the diaphragm. Also, the top plate must remain in position to prevent the safety diaphragm from distorting.
17	Place the liquid end with the screws on the diaphragm and the top plate (the priming connector must point downwards once the pump is fully assembled).
18	Screw on screws lightly and tighten

STANDARD OPERATION PROCEDURE:
B&L WOODWASTE GROUNDWATER TREATMENT SYSTEM
P330 - POLYMER FEED SYSTEM
B&L Woodwaste Landfill
Milton, Washington

OPERATION PROCEDURES, GENERAL OVERVIEW

Introduction

This procedure outlines operational procedures for the polymer feed system in the groundwater treatment system at the B&L Woodwaste Site. The system includes a neat polymer holding tank; a polymer makedown skid, where the polymer is diluted and mixed with water; a day tank where the dilute solution is mixed and held until dosing to the system; and two dosing pumps that supply polymer to the flash mixing tank and the sludge tank. Proper polymer dosing promotes better floc formation.

Pre-requisites to Do This Procedure

To do this procedure you must:

- Be fully trained for treatment system operations or be training in the area with someone who has been fully trained.
- Be fully trained for handling and management of dangerous wastes.
- Be familiar with all aspects of this operating procedure.
- Be Hazardous Waste Operations (HAZWOPER)-trained and current with annual training updates.

In This Procedure

Following is a list of topics in this Procedure:

1.0 SAFETY CONSIDERATIONS

Health and Safety Plan (HASP)	The HASP maintained in the treatment building provides plans and requirements to protect the health and safety of workers involved in the operation and maintenance of the groundwater extraction and treatment system. All workers must be familiar with and sign the HASP. Specific requirements for Personal Protective Equipment (PPE) are included in the HASP. If there are any discrepancies between PPE requirements included in these procedures and PPE requirements specified in the HASP, the stricter of the two requirements specified shall be followed.
Level of Hazard	**Medium** Polymer will cause extremely slippery conditions if it comes in contact with skin or water. Caution should be maintained and proper PPE donned before working with the polymer feed system. There are also electrical components acting in the system which necessitate proper lockout/tagout prior to maintenance. Due to the presence of dangerous waste within the closed landfill, all personnel working at the site must be fully trained in accordance with 29 CFR 1910 and WISHA regulations. Forty-hour Hazardous Waste Operations Training with yearly eight hour refresher training is required for anyone performing work at the B&L Woodwaste Site.

2.0 NORMAL OPERATION

Critical Information	The polymer feed system will make a batch of polymer solution and dose it to the clarifier flash tank through two Moyno pumps.

Personal Protective Equipment

Safety Glasses	Nitrile Gloves
Steel Toe Boots (Leather or Rubber)	

Procedure

Step	Normal Startup
1	The polymer feed system will automatically mix a batch of polymer in the polymer day tank when the level of polymer solution reaches the low level alarm. This alarm can be set on the “Alarm settings 1” page on the PLC. Ensure that both water influent rotameters on the polymer makedown skid are opened to let in ~1.1 gpm each. The cylinders are on the bottom left side of the skid and have flow indicators which are set with the hand valves on top of the indicator columns. Confirm that the magnetic switch clamped on the dilution water rotameter is set low enough to be actuated by the rotameter float when operating. Confirm that the influent potable water flow meter is clean and not restricting flow to the makedown skid.

2	When polymer level inside the neat polymer cone bottom tank is running low, fill the cone bottom tank located adjacent to the polymer make down skid with a new pail of polymer. Be sure to wear safety gloves and glasses when working with polymer. Do not allow polymer to contact water outside of make down skid to avoid slippery conditions and premature polymer make down.
3	The skid will stop making polymer when the level of the day tank reaches the high level alarm. High level settings are also found on “Alarm settings 1” page of the PLC.
4	Check for spare polymer pails onsite. If there are no spares, order new chemicals. Document the status of spare pails on the weekly Plant checklist.

Procedure

Step	Normal Shutdown
1	The polymer system will automatically stop dosing when the plant stops running. This will prevent the low level alarm from triggering since there will be no outflow from the day tank.

3.0 MAKEDOWN SKID OPERATION

Critical Information

The polymer makedown skid mixes polymer batches with an influent water flow of 2.2 gpm. Verify polymer concentration by checking influent flow rate and polymer skid pump speed

Personal Protective Equipment

Safety Glasses	Nitrile Gloves
Steel Toe Boots (Leather and Rubber)	

Procedure

Step	Flushing the Make down Skid Mixing Chamber
1	If shutting down the make down skid for over a week, the mixing chamber should be flushed and the neat polymer line from the pail to the discharge point in the mixing chamber should be flushed with vegetable oil.
2	To flush the mixing chamber, first turn off the switch on the back of the make down skid to turn off the polymer dosing pump.
3	Open the influent water valve and the mixing chamber influent cylinders.

4	Allow the chamber to flush with water.
5	Close the influent water valve.
6	To flush the neat polymer line, remove the suction line from the neat polymer pail and place it into the container of vegetable oil. Run the solenoid pump at maximum stroking rate until vegetable oil enters the mixing chamber.
7	Prevent any water from contacting neat polymer in order to prevent an unsafe slippery condition and possible pipe/tube plugging.

4.0 MIXER OPERATION

Critical Information

The polymer day tank mixer should be left running while polymer solution is in the day tank.

Personal Protective Equipment

Safety Glasses	Nitrile Gloves
Steel Toe Boots (Leather or Rubber)	

Procedure

Step	Polymer Day Tank Mixer PMSL PG-12 (6 months)
1	Inspect mixer for unusual sounds, excessive vibration, excessive heat, or grease leakage. If any of these symptoms occur, stop the mixer and find the cause.
2	Every six months, inspect the propeller for evidence of erosion or corrosion.
3	During the six month inspection, check hardware tightness. Re-torque the mixer hardware to original specifications. Screws and bolts should be tightened to 6 ft-lbs wrench torque.

5.0 DOSING PUMP OPERATION

Critical Information

The polymer dosing pumps supply polymer solution to the flash mixing chamber and the sludge tank.

Personal Protective Equipment

Safety Glasses	Nitrile Gloves
Steel Toe Boots (Leather or Rubber)	

Procedure

Step	Dosing Pump Operation
1	The polymer dosing pumps are to be used in duty/standby configuration. The pump seals need to be primed using potable water from an inlet on the wall.
2	Pump seal water should be flowing at all times when a pump is running. Check the water lines behind the pumps and ensure that there is pressure on the gauge and the valves going to the duty pump are open during pump operation.
3	The PLC will adjust the pump dosing to match flow through the system, based on the influent flowmeter (FIT-100).
4	When changing duty/standby on the PLC, ensure that the breaker for the new duty pump is switched to “on” in the MCC and that seal water is available.

STANDARD OPERATION PROCEDURES:
B&L WOODWASTE GROUNDWATER TREATMENT SYSTEM
PROCEDURE P410 - ACID FEED SYSTEM
B&L Woodwaste Landfill
Milton, Washington

OPERATION PROCEDURES, GENERAL OVERVIEW

Introduction

This procedure outlines operational procedures for the acid feed system in the groundwater treatment system at the B&L Woodwaste Site.

Pre-requisites to Do This Procedure

To do this procedure you must:

- Be fully trained for treatment system operations or be training in the area with someone who has been fully trained.
- Be fully trained for handling and management of dangerous wastes.
- Be familiar with all aspects of this operating procedure.
- Be Hazardous Waste Operations (HAZWOPER)-trained and current with annual training updates.

In This Procedure

Following is a list of topics in this Procedure:

1.0 SAFETY CONSIDERATIONS

Health and Safety Plan (HASP)	The HASP maintained in the treatment building provides plans and requirements to protect the health and safety of workers involved in the operation and maintenance of the groundwater extraction and treatment system. All workers must be familiar with and sign the HASP. Specific requirements for Personal Protective Equipment (PPE) are included in the HASP. If there are any discrepancies between PPE requirements included in these procedures and PPE requirements specified in the HASP, the stricter of the two requirements specified shall be followed.
Level of Hazard	**High** Sulfuric acid delivered to the site will be between 93% and 97% acid. Concentrated sulfuric acid is a thick oily liquid. Sulfuric acid is very hazardous in case of skin contact (corrosive, irritant, permeator), of eye contact (irritant, corrosive), of ingestion, and of inhalation. Sulfuric acid is not volatile, but mists can cause lung damage. Operators should stay cautious and alert when working with the acid feed system and corresponding deliveries. All personnel working at the site must be fully trained in accordance with 29 CFR 1910 and WISHA regulations. Forty-hour Hazardous Waste Operations Training with yearly eight hour refresher training is required for anyone performing work at the B&L Woodwaste Site. Appropriate PPE should be worn at all times when operating around sulfuric acid.

2.0 ACID DELIVERY AND SYSTEM SETUP

Critical Information

The acid dosing system will use 93%-97% sulfuric acid which will be delivered in totes to the site. Operators must use caution and proper PPE when working around concentrated sulfuric acid. Deliveries will be scheduled when one tote runs out. There will generally be two totes onsite at a time; both will be located on the grating over the acid containment sump.

Personal Protective Equipment

Goggles and Face Shield	Rubber Pants and Coat or Apron
Rubber Gloves and Elbow Sleeves	Chemical-resistant Boots

Procedure

Step	Receiving Acid Delivery
1	When acid tote is at a low level, carefully lift acid tote at end opposite the outlet, and brace with a piece of plastic, so that acid drains toward the outlet and minimal acid is wasted upon changeout.
2	Don proper PPE before receiving sulfuric acid shipment.
3	Open the delivery door and prepare the area for acid shipment. Clear any pathway obstructions and notify other onsite personnel that acid is being delivered. Place acid delivery ramps.
4	Disable acid level alarm on PLC by pressing the “Disable” button on the HMI. Remove pressure relief/desiccant valve and level transmitter from empty acid tote. Tubing should have already been removed from empty tote.
5	Allow truck driver to remove empty acid tote from secondary containment area.
6	Allow truck driver to place full tote in secondary containment area. Check for any deformities in tote or secondary containment area.
7	Install pressure relief/desiccant valve and level transmitter in new acid tote. Ensure that level transmitter is operational and that acid level alarms are re-enabled in the PLC.

Procedure

Step	Changing Acid Tote Feed
1	Don proper PPE before working with sulfuric acid totes.
2	Close hand valve 411 attaching acid tote to acid dosing skid.
3	Close hand valve 412 between flex hose and dosing pumps.
4	Disconnect the tubing connected to the tote. Be careful and keep tubing end tilted upwards to prevent spilling. If any liquid is discharged, do not let it come in contact with skin or clothing. Neutralize the spill with an excess of calcium hydroxide (lime). Be sure to neutralize all spilled sulfuric acid completely using sodium bicarbonate or another weak base because sulfuric acid takes a very long time to evaporate. In the event of a discharge to the secondary containment area, alert onsite personnel.
5	Connect tubing to full tote. Open hand valve on full tote.
6	Check that desiccating breather vent is unobstructed, desiccant is active (blue, not pink), and level transmitter is operational.

3.0 NORMAL OPERATION AND STARTUP

Critical Information

The programmable logic controller (PLC) will automatically run the acid dosing pumps when there is flow through the system. Adjustments must be made to the PLC in order to change stroke speed.

Procedure

Step	Normal Operation and Startup
1	When the plant is not in shutdown mode and the pH adjust tank pH level is above its setpoint, the active acid dosing pump turns on automatically. The pumps are set in a duty/standby configuration. If an acid leak is detected in the acid dosing skid an alarm will be initiated notifying the operator.
2	Check the PLC to ensure that one of the acid pumps is green (pumping). The targeted pH in the pH adjust tank is 6.2-6.5.
3	To switch the active dosing pump, click on the “A/B mode” button on the HMI. Pumps should be switched on a bi-monthly basis.
4	If changing the stroke length percentage is necessary, turn the dial on the pump by hand to desired number. This measure should not be necessary. Only use if the PLC control loop is creating the wrong pH and a different stroke length is needed. After manually adjusting the stroke percentage, change the PLC settings for “stroke percentage” under alarm setting 2.

4.0 DOSING PUMP OPERATION AND MAINTENANCE

Critical Information

The acid dosing pump is a ProMinent Gamma/L dosing pump. The procedures below are for the proper dosing of sulfuric acid to the pH adjust tank, where water is acidified to an acceptable pH range prior to the adsorbers. Operations include dosage adjustment and preventative maintenance on the dosing pump.

Personal Protective Equipment

Face Shield and Goggles	Rubber Gloves
Rubber Jacket and Elbow Sleeves	Rubber Pants and Chemical Resistant Boots

Set stroke length
Stroke length is continually adjustable within a range of 0 - 100%.
The recommended stroke length range for best reproducibility is 30 - 100%.

The following operating options are available via the different keys:

Stop/Start pump
To stop gamma/ L: press STOP/START key.
To start gamma/ L: press STOP/START key.

Load factory settings
Press the P key for 15 s only if you wish to load factory calibration settings! Current settings will be deleted. Before doing this, be sure to record the current settings for future reference.

Change to settings mode
When you press the P key for 2 s in any continuous display, the gamma/ L will change to settings mode. If CODE 1 is set, the code must be entered after pressing the P key.

Check adjustable values
Each time you press the ”i” key you will see a different continuous display. The number of continuous displays depends upon the identity code, the selected operating mode and the connected accessories.

Change directly alterable values
To change a value (see below) directly in the corresponding continuous display, press one of the arrow keys until “set” appears in the LCD display. The delay has been programmed in to prevent inadvertent changing of values. If CODE 2 has been set, this code must be entered after pressing the arrow key. Directly alterable values are as follows:

Stroke rate
In “manual”, “contact” and “batch” operating modes: The stroke rate can be altered in the “stroke rate” display.

Operating Information

Priming
The “priming” function is activated by pressing both arrow keys at the same time in the “Stroke rate” permanent display. This causes the pump to run at maximum speed for a short period of time.

Cancel error
Error messages are cancelled by pressing the P key briefly.

Display program versions
Press on the P key for 10 seconds to display the programme versions.
Example: “V 1052“ + X 1010“.
Release the key on “LOAD 3“ immediately after batch size has been reset.

Procedure

Step	Pump Maintenance (Perform Quarterly)
1	The Gamma / L pump should be inspected quarterly while it is operating. USE CAUTION WHEN OPERATING ON ACID DOSING PUMPS. PREVENT ANY CHEMICAL CONTACT WITH SKIN. Wear rubber gloves and rubber pants/jacket when maintaining the pump.
2	The parts of the dosing pump are shown below. The sulfuric acid is pumped through the “liquid end” of the pump by the diaphragm. 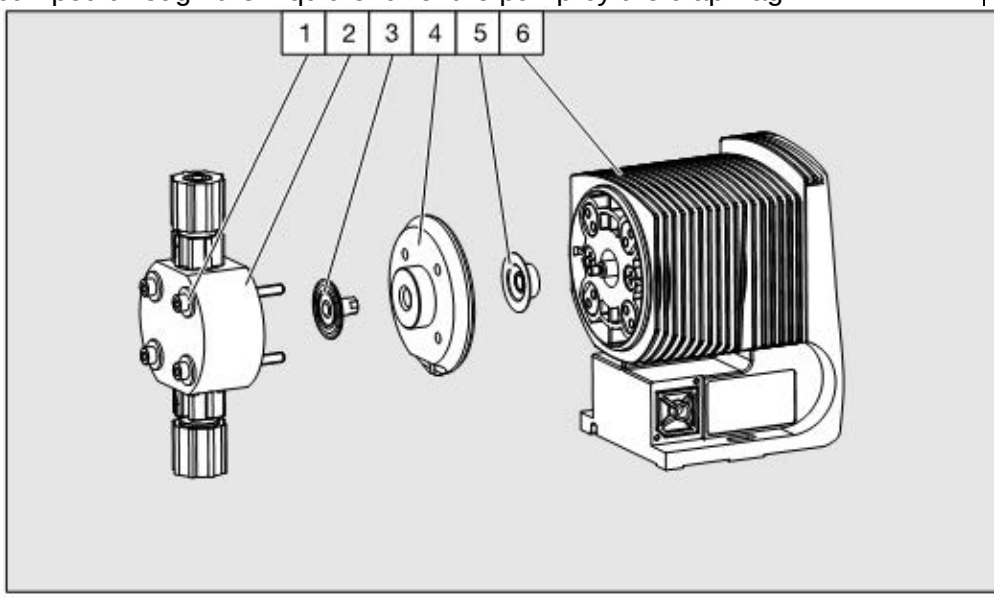 Fig. 21 1 Screws 2 Liquid end 3 Diaphragm 4 Top plate 5 Safety diaphragm 6 Pump housing

3	Check for chemical seepage at vent hole on the pump housing. If there is chemical seepage, tighten the connection… 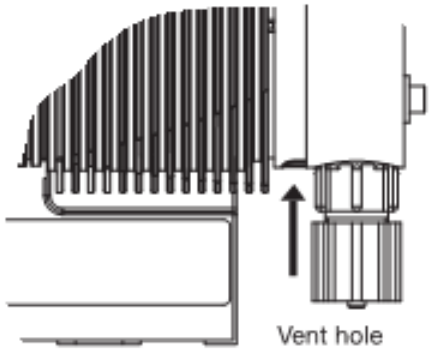
4	Check that the discharge tubing is connected firmly to the liquid end.
5	Check that discharge and suction valves are firmly fixed.
6	Check that the liquid end is generally watertight
7	Check for correct feed: run the dosing pump for a short period. To do this manually, press both arrow keys together.
8	Check electrical connections for wear.
9	Check that liquid end screws are fastened tightly.

Procedure

Step	Inspecting and Changing the Diaphragm (Every 6 Months)
1	Empty the liquid end (turn the unit upside down and let the feed chemical run out, rinse with water thoroughly.)
2	When the pump is running set the stroke length to 0% (the drive axis is then set).
3	Switch off the pump.
4	Unscrew the hydraulic connectors from the discharge and suction side of the liquid end.
5	Remove the four screws on the liquid end of the dosing pump.
6	Loosen the liquid end and the top plate from the pump housing - loosen only!
7	Hold the housing in one hand and with the other, clamp the diaphragm between the liquid end and the top plate. Then release the diaphragm from the drive spindle with a light anticlockwise turn of the liquid end and top plate.
8	Unscrew the diaphragm completely from the drive spindle.
9	Remove the top plate from the housing.
10	Check the condition of the safety diaphragm and replace if necessary.

11	Push the safety diaphragm only as far onto the drive axis until it lies flat on the pump housing – no further!
12	Screw the new diaphragm carefully up to the stop on the drive axis – this must be exact to ensure correct metering!
13	Screw the diaphragm tight once more.
14	Position the top plate on the pump housing. CAUTION - The leakage hole must point downwards when the pump is fully assembled.. Also, do not distort the top plate on the pump housing, otherwise the safety diaphragm will not fit.
15	Lay the diaphragm into the top plate.
16	Hold the top plate and screw the diaphragm in a clockwise direction until it is firmly in position (you will feel the resistance of the return spring). CAUTION - Do not overtighten the diaphragm. Also, the top plate must remain in position to prevent the safety diaphragm from distorting.
17	Place the liquid end with the screws on the diaphragm and the top plate (the priming connector must point downwards once the pump is fully assembled).
18	Screw on screws lightly and tighten

STANDARD OPERATION PROCEDURES:
B&L WOODWASTE GROUNDWATER TREATMENT SYSTEM
PROCEDURE P420 - PH ADJUST TANK AND EFFLUENT PUMPS
B&L Woodwaste Landfill
Milton, Washington

OPERATION PROCEDURES, GENERAL OVERVIEW

Introduction

This procedure outlines operational procedures for the pH adjust tank in the B&L Woodwaste groundwater treatment system. The purpose of this tank is to bring the pH of the groundwater down to around 6.2-6.5 after the clarifier.

Pre-requisites to Do This Procedure

To do this procedure you must:

- Be fully trained for treatment system operations or be training in the area with someone who has been fully trained.
- Be fully trained for handling and management of dangerous wastes.
- Be familiar with all aspects of this operating procedure.
- Be Hazardous Waste Operations (HAZWOPER)-trained and current with annual training updates.

In This Procedure

Following is a list of topics in this Procedure:

1.0 SAFETY CONSIDERATIONS

Health and Safety Plan (HASP)	The HASP maintained in the treatment building provides plans and requirements to protect the health and safety of workers involved in the operation and maintenance of the groundwater extraction and treatment system. All workers must be familiar with and sign the HASP. Specific requirements for Personal Protective Equipment (PPE) are included in the HASP. If there are any discrepancies between PPE requirements included in these procedures and PPE requirements specified in the HASP, the stricter requirements specified shall be followed.
Level of Hazard	**High** Sulfuric acid used to lower the pH adjust tank is between 93% and 97%. It will cause burning and extreme irritation if it comes in contact with skin. Appropriate PPE should always be worn when working around the pH adjust tank. Due to this and the presence of dangerous waste onsite, all personnel working at the site must be fully trained in accordance with 29 CFR 1910 and WISHA regulations. Forty-hour Hazardous Waste Operations Training with yearly eight hour refresher training is required for anyone performing work at the site.

2.0 NORMAL OPERATION

Critical Information	The acid dosing pumps and tank effluent pumps are controlled by the PLC. If the pH goes above or below the pH setpoint, the PLC will engage the acid dosing pump according to a PID algorithm. The effluent pump will change speed and attempt to set the water level in the tank to the level set point according to a PID algorithm to account for pressure requirements to pump through the filtration units. The level setpoint can be adjusted on the PLC.

Procedure

Step	Normal Operation
1	Occasional checks should be made to ensure that the pH tank liquid level is reported correctly by the PLC. Perform a visual check during system inspections.
2	The pH target for the tank is 6.2. If the PLC is reporting a value far from the target, take note and investigate.
3	Check that the mixer is spinning during visual inspection.

3.0 NORMAL STARTUP AND SHUTDOWN

Critical Information	All instrumentation and motor controls must be on and operating properly to run the pH adjust tank.

Personal Protective Equipment

Safety Glasses	Nitrile Gloves
Steel Toe Boots (Leather or Rubber)	

Procedure

Step	Normal Startup and Shutdown
1	The pH tank-related operations will start when there is power to the system and the plant is not in shutdown mode.
2	Ensure that the power is on to the tank mixer.
3	Check the valves on the pH adjust tank effluent and the discharge pump influent and effluent. One pump should operate at a time. The breaker for the “duty” pump should be on in the MCC, and the pump should be set to auto. The pump’s seal water valve should be open.

4.0 PH METER OPERATION AND MAINTENANCE

Critical Information	The pH/ORP transmitter will measure pH in the pH adjust tank and control the sulfuric acid dosing pump accordingly. The sensor must be maintained properly to prevent overdosing. The pH transmitter output must be calibrated yearly to ensure quality of data. If the pH sensor is suspected of being the source of a problem with the pH metering, a quick visual inspection can identify the problem. Often the problem is a dirty sensor that needs to be cleaned.

Tools/Supplies

Digital Multimeter (DMM)	Bladed Screwdrivers (Small and Large)

Personal Protective Equipment

Safety Glasses	Nitrile Gloves
Steel Toe Boots (Leather or Rubber)	

Procedure

Step	Calibrate pH Transmitter Output (Yearly)
1	Use the bladed screwdriver to loosen the four captive screws that secure the rear cover to the transmitter.
2	Use the small bladed screwdriver to remove the shorting jumper from the test terminals, TB1-3(+) and TB1-4(-), as shown in Figure 1.
3	Set the DMM to measure mA and connect it to the TEST terminals, TB1-3(+) and TB1-4(-).
4	Press the NEXT smart key until “CALIBRATE” is highlighted on the display.
5	Press the SELECT smart key to enter the calibrate state.
6	Press the NEXT smart key until “OUT.CAL” appears on the display.
7	Press the SELECT smart key to start the output calibration procedure.
8	Use the UP and DOWN smart keys to adjust the output so that the DMM reads 4.0 mA.
9	Press the ENTER smart key to enter the new value and proceed to the 20-mA output.
10	Use the UP and DOWN smart keys to adjust the output so that the DMM reads 20.0 mA.
11	Press the ENTER smart key to enter the new value. The transmitter returns to the output calibrate state. NOTE: Once you take this step, you will have to repeat the output calibration procedure if you wish to change anything about the calibration.
12	Press the exit to MEASURE smart key to return to the measure mode.

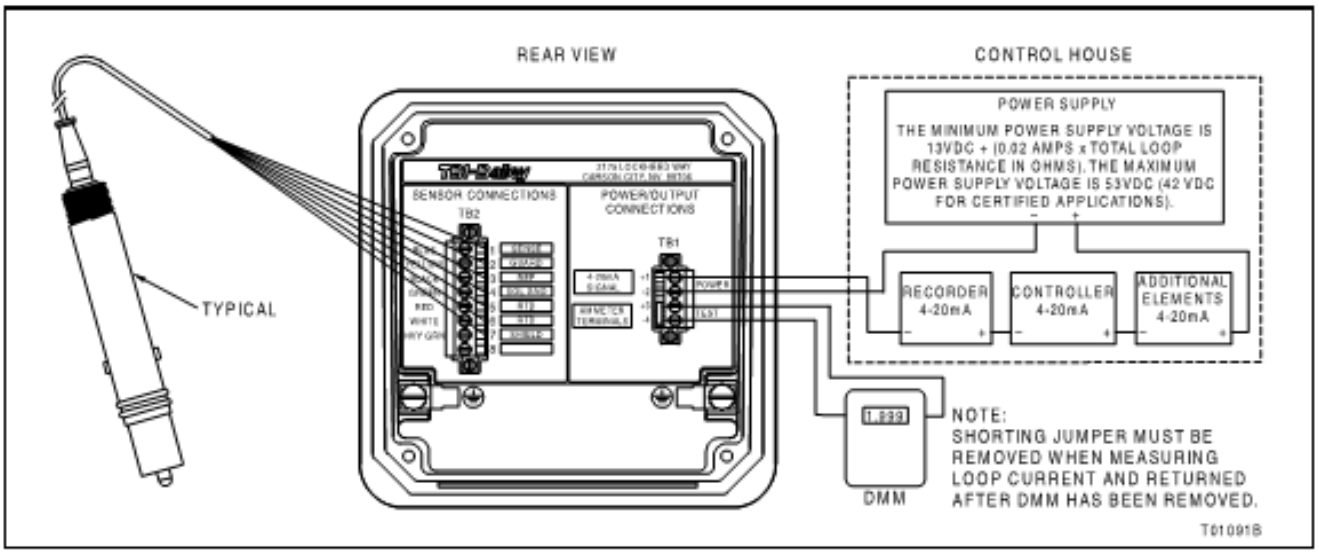

Figure 1. Location of shorting jumper.

Tools/Supplies

Clean Cloth	DI
Soft Bristle Toothbrush	

Procedure

Step	Sensor Cleaning (After Inspection)
1	Physical Cleaning: -Physical cleaning will remove scale and other accumulations. When mechanically cleaning the sensor, always use a soft bristle brush in order to avoid damaging the insulative coating on the solution ground (the metallic collar around the measuring electrode). This coating is only present on the outer diameter next to the reference junction and must be intact for the reference diagnostics to function properly.
2	Use a tooth brush with DI to gently clean the sensor. Take extreme caution when cleaning the glass pH electrode to prevent glass breakage.

Tools/Supplies

Temperature Measuring Device	Low and High pH Standard Solutions

Procedure

Step	pH Sensor Calibration (Weekly) & Reconditioning (Monthly)
1	Prepare the pH 7.00 and 10.01 standard solutions.
2	Remove the sensor from the process by gently pulling up on the sensor cable straight up the pipe surrounding the sensor. During weekly calibration, clean the pH sensor as outlined in the cleaning steps above.
3	Press the NEXT smart key until CALIBRATE is highlighted on the display.
4	Press the SELECT smart key to enter the calibrate state.
5	Press the NEXT smart key until 2PT.CAL appears on the display.
6	Press the SELECT smart key to start the two-point calibration procedure.
7	The transmitter displays the current temperature in degrees Celsius and TMP°C. Use the temperature measuring device to measure the temperature of the pH standard and enter that number into the transmitter.
8	The transmitter asks for the LO VAL. Enter the value of the low pH standard solution as labeled on the standard solution container.
9	Place the sensor in the low standard solution.
10	Stir the solution with the sensor in a slow, circular motion for 30 seconds. Allow the sensor to stabilize for approximately 5 minutes in the standard solution.

11	The transmitter should now display STABL?. Observe the displayed reading. If it is stable, press the YES smart key. If it is not stable, press the NO smart key. If NO is selected, the transmitter returns to the process sensor calibration state. If the reading will not stabilize, perform steps 12 through 13 below. If YES is selected, skip ahead to Step 14.
12	Wait until the process liquid composition stabilizes.
13	Check to see if the transmitter has detected a fault condition by looking for the FAULT icon on the display. Interrogate the fault by navigating to the measure mode through the EXIT TO MEASURE smart key and then by pressing the FAULT info smart key.
14	The transmitter asks for the HI VAL. Enter the value of the high buffer or standard.
15	Remove the sensor from the low buffer or standard solution.
16	Rinse the sensor with de-ionized water.
17	Place the sensor in the high standard solution.
18	Stir the solution with the sensor in a slow, circular motion.
19	The transmitter should now display STABL?. Observe the displayed reading. If it is stable, press the YES smart key. If it is not stable, press the NO smart key. If NO is selected, the transmitter returns to the process sensor calibration state. If the reading will not stabilize, perform steps 12 through 13 above. If YES is selected, go on to Step 20 below.
20	If the entered calibration value is not valid, the transmitter displays BAD.CAL, and the calibration value is rejected. If the entered calibration value is valid, the slope (sensor efficiency) appears on the display. Press the NEXT smart key to display the offset.
23	Press the NEXT smart key to return to the process sensor calibrate state or press the exit to MEASURE smart key to go to the measure mode. Document calibration and measured values in the B&L Woodwaste Weekly and Monthly Plant Checklist (Attachment P-001). Follow record keeping procedures for filled out checklists and probe logs.
24	If the slope as indicated on the transmitter falls below 80% or the offset exceeds +/- 150 mV, recondition the probe by placing in the acid/pepsin solution for an hour and then in the storage solution for 12 hrs. If the calibration parameters are still outside of the accepted range, the probe needs to be replaced.
25	Once a month the pH probe will need to be reconditioned and will be replaced with the standbye pH probe.
26	Clean the pH sensor being pulled out of the process as outlined in the cleaning steps above. Place the pH sensor in the acid/pepsin cleaning solution for 60 minutes.
27	Remove the standbye probe from the storage solution and follow the calibration procedures outline above.
28	Remove the probe from the acid/pepsin solution from step 26 and place the probe in the storage solution.

5.0 DISCHARGE PUMP OPERATION AND MAINTENANCE

Personal Protective Equipment

Safety Glasses	Nitrile Gloves
Steel Toe Boots (Leather or Rubber)	

Procedure

Step	Normal Operation
1	The discharge pumps will start when the tank liquid level is above its set value, which can be changed on the PLC. Simply enter a different level in the box next to the pH adjust tank and press enter.
2	The effluent pumps are in duty/standby mode. When the PLC reads “A Mode,” only pump A will operate. Switch to B mode when pump A needs to rest. This should be done bimonthly or during individual pump maintenance.
3	The pumps will shut off when the water level in the pH adjust tank reaches the “low” level. This setting is found under alarm settings 1 on the PLC.
4	Ensure seal water is on when pump is running. Seal water line can be seen on wall behind effluent pumps and should have pressure on the gauge when water is flowing to pump seal.

Procedure

Step	Changing Oil
1	The bearing oil should be replaced every 2000 operating hours or every 3 months. Lock out the pump by closing influent and effluent ball valves and turning the circuit breaker in the MCC room to “OFF.” Place a lockout/tagout padlock on the breaker.
2	Remove the fill plug located on top of the bearing casing,

3	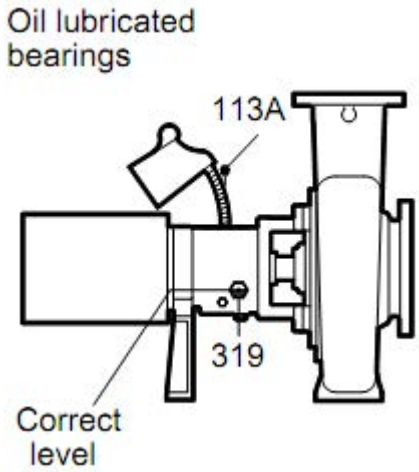 Fill the bearing frame with oil through the filler connection, which is located on top of the bearing frame. Fill the bearing frame with oil until the oil level reaches the middle of the sight glass (319).
3	Replace the fill plug.

6.0 MIXER MAINTENANCE AND INSPECTION

Critical Information	Preventative maintenance should be performed on the pH adjust tank mixer according to the timeline in the procedure below. Operators should continually monitor sounds and vibrations, documenting changes.

Tools/Supplies

Wrench	Screwdrivers

Personal Protective Equipment

Safety Glasses	Nitrile Gloves
Hard Hat	Steel Toe Boots (Leather or Rubber)

Procedure

Step	pH Adjust Tank Mixer Inspection and Maintenance - 6 Month Inspection
1	While the mixer is running, inspect the mixer for unusual sounds, excessive vibration, excessive heat, or any grease leakage. If any of these observations are made, stop the mixer and diagnose the problem and fix the problem if possible.
2	Turn off the propeller during the six month inspection and visually inspect the propeller for evidence of corrosion or other damage.
3	During the six month inspection, check for loose hardware. If required, re-torque the mixers' bolts securing the hardware to the original specifications (Torque value dependent on bolt size as given in the PMSL PV-2 instruction manual).
4	If there is an extended shutdown, run the mixer for approximately 10 minutes once a week to ensure that a coat of grease is distributed among the gears and bearings to prevent rust due to moisture condensation.

STANDARD OPERATION PROCEDURES:
B&L WOODWASTE GROUNDWATER TREATMENT SYSTEM
PROCEDURE P425 - BAG FILTER SYSTEM
B&L Woodwaste Landfill
Milton, Washington

OPERATION PROCEDURES, GENERAL OVERVIEW

Introduction

This procedure outlines operational procedures for the bag filters in the B&L Woodwaste groundwater treatment system. The bag filters are used to separate additional suspended solids material from the wastewater before the cartridge filtration step and the final arsenic adsorption column step.

Pre-requisites to Do This Procedure

To do this procedure you must:

- Be fully trained for treatment system operations or be training in the area with someone who has been fully trained.
- Be fully trained for handling and management of dangerous wastes.
- Be familiar with all aspects of this operating procedure.
- Be Hazardous Waste Operations (HAZWOPER)-trained and current with annual training updates.

In This Procedure

Following is a list of topics in this Procedure:

1.0 SAFETY CONSIDERATIONS

Health and Safety Plan (HASP)

The most recent version of the HASP is maintained in the treatment building office and provides plans and requirements to protect the health and safety of workers involved in the operation and maintenance of the groundwater extraction and treatment system. All workers must be familiar with and sign the HASP. Specific requirements for Personal Protective Equipment (PPE) are included in the HASP. If there are any discrepancies between PPE requirements included in these procedures and PPE requirements specified in the HASP, the stricter requirements specified shall be followed.

Level of Hazard	**Medium** Hazards associated with this task include handling contaminated sludge and water that contains arsenic. Other hazards include stored energy in the bag filter housings (filter units) in the form of high pressure that needs to be relieved prior to any servicing of the filter units. When servicing both filter units, the effluent pumps need to be shut off, locked out, and tagged out prior to performing services on the filter units. The filters will contain groundwater contaminants so appropriate PPE must be worn as defined in the HASP. Due to this risk and the presence of dangerous waste within the closed landfill, all personnel working at the site must be fully trained in accordance with 29 CFR 1910 and WISHA regulations. Forty-hour HAZWOPER training with yearly eight hour refresher training is required for anyone performing work at the B&L Woodwaste Site.

2.0 NORMAL STARTUP OPERATION

Critical Information	The metal housing of each of the two filter units contains one bag filter which should be replaced once a pressure differential above 20 psi is reached. Depending on the mode of operation and anticipated solids loading, either one filter housing or both housings may be run at a time. Both housings may be run in parallel by opening both influent and effluent ball valves. Both may be run during times of high solids loading (to extend time between change outs). One filter housing may be run at a time by isolating the filter housing not in use by closing the influent and effluent ball valves of the filter housing while leaving the other filter housings' ball valves open. The filters will typically be operated one at a time to allow for the operator to change out the filter bag that is clogged without any system down time.

Personal Protective Equipment

Safety Glasses	Nitrile Gloves
Steel Toe Boots (Rubber or Leather)	

Procedure

Step	Normal Operation
1	Open influent and effluent ball valves completely for operational filter housing. Close valves for standby unit.
2	Open vent valve on top of the filter unit to vent air during initial start up. Ensure that vent is secured and pointing to ground as it will begin to discharge water after air is relieved.

3	Close vent valve once air is no longer being relived and a constant stream of water is observed discharging from the valve.
4	Check filter unit for leaks while running water through it. Screws should be tight enough to ensure seal.
5	Check pressure differential when inspecting operational filter unit. Note if differential reaches 20-30 psi range. If so, the flow of wastewater must be switched to other stand by filter unit and the old filter bag needs to be replaced and disposed of (Section 3.0 below).
6	Check for spare filter bags onsite. There should be at least 10 spare filter bags onsite at all times. If there are not, order new bag filters. Document the status of spare bag filters in the weekly plant checklist.
Step	**Parallel Operation**
1	Open influent and effluent ball valves on both filter housings completely.
2	Open vent valve on top of both filter units to vent air during initial start up. Ensure that vents are secured and pointing to ground as they will begin to discharge water after air is relieved.
3	Close vent valves once air is no longer being relieved and a constant stream of water is observed from both valves.
4	Check filter units for leaks while running water through them. Screws should be tight enough on both units to ensure seal.
5	Check pressure differential when inspecting operational filter units. Note if differential reaches 20-30 psi range. If so, the flow of wastewater must be shut off and the old filter bags need to be replaced and disposed of (Section 3.0 below)
6	Check for spare filter bags onsite. There should be at least 20 spare filter bags onsite at all times. If there are not, order new bag filters. Document the status of spare bag filters in the weekly plant checklist.

3.0 OPERATION AND MAINTENANCE

Critical Information	The bagfilters must be removed and replaced once the pressure differential reaches above 20 psi.

Personal Protective Equipment

Safety Glasses	Nitrile Gloves
Steel Toe Boots (Rubber or Leather)	

Procedure

Step	Replacing Bag Filters Normal Operation
1	Open ball valves for filter unit to be put into service while changing out bag for unit in need of service. Follow startup procedures for “Normal Operation” as discussed above.
2	Close ball valves for influent and effluent to isolate filter unit to be serviced.
3	Release pressure in the filter housing by opening the pressure relief valve on the top of the housing and allowing the vessel to discharge pressurized water. Ensure that the pressure relief valve line is pointed towards the ground in a safe direction as water released initially may be at a high velocity. Allow the water to drain into the secondary containment sump until water no longer flows from the pressure relief valve.
4	Open the hand valve at the bottom of the filter unit being serviced and allow the unit to drain completely out into the sump.
5	Once the filter unit is drained out, unscrew the three oval screws on top of the filter housing.
6	Remove the basket strainer, which contains the bag and put aside in a place where they it will not get lost or damaged. Pull up on the filter bag to remove.
7	Verify that the gasket along the sides of the strainer is properly attached and secure.
8	Inspect the filter lid gasket located on the filter housing for any signs of damage. If the gasket is damaged, replace with a new gasket.
9	Remove and dispose of the old filter bag. Inspect the new filter bag to be placed in the unit for any structural damage or tears. If damaged, throw away and replace the damaged filter bag. Install the new filter bag into the housing, ensuring to line up the bottom of the new bag with the strainer lip.
10	Place the strainer and bag filter into the filter housing. Close the filter housing lid and ensure the lid and gasket are lined up. Tighten the three oval screws on top of the filter housing. Screws should be hand tightened to ensure that the lid seats properly on the housing. Once the lid is aligned and seated properly on the housing, the screws must be fully wrench-tight to ensure a proper seal of the unit is created.
11	Follow startup procedures as discussed above in the “Normal Operation” startup procedures.
Step	**Replacing Filters Parallel Operation**
1	Shut down the groundwater treatment system and the extraction wells.
2	Lock out and tag out the effluent pumps.
3	Close all of the effluent and influent ball valves for both filter units.
4	Follow steps 3-10 as discussed above in the “Replacing Filters Normal Operation” procedures for each filter unit.
5	Open the influent and effluent ball valves on both filter housings completely.

6	Open the vent valves on top of both of the filter units to vent air during initial start up. Ensure that vents are secured and pointing to the ground as they will begin to discharge water after air is relieved when system is turned on.
7	Turn the groundwater treatment system and recovery wells back on.
8	Follow steps 3-6 in the “Parallel Operation” startup procedures.

Procedure

Step	Flushing Filter Housing During Plant Shutdown
1	If during operation and maintenance of the filter units, excess sludge material is observed in the filter housings, it will need to be flushed out requiring a system shutdown. Report excess biomass or solids to process engineer to evaluate whether or not a problem exists or if the system needs to be flushed out with bleach water.
2	With the system shut down, the filter units isolated, and the spent cartridges removed (as discussed in the procedures above), open up the 1” ball valve flush ports in each of the filter bag housings located near the bottom of the filter housings.
3	Using a garden hose, clean out the filter cartridge housing by spraying water on the interior of the housing. The stray solids should flush out of the flush port and into the sump.
4	Clean out the port and close the ball valve.
5	Replace the filters as in the procedures discussed above and return the system to normal operation.

STANDARD OPERATION PROCEDURES:
B&L WOODWASTE GROUNDWATER TREATMENT SYSTEM
PROCEDURE P430 - CARTRIDGE FILTER SYSTEM
B&L Woodwaste Landfill
Milton, Washington

OPERATION PROCEDURES, GENERAL OVERVIEW

Introduction

This procedure outlines operational procedures for the cartridge filters in the B&L Woodwaste groundwater treatment system. The cartridge filters are used to separate additional suspended solids material from the wastewater before the final arsenic adsorption column step.

Pre-requisites to Do This Procedure

To do this procedure you must:

- Be fully trained for treatment system operations or be training in the area with someone who has been fully trained.
- Be fully trained for handling and management of dangerous wastes.
- Be familiar with all aspects of this operating procedure.
- Be Hazardous Waste Operations (HAZWOPER)-trained and current with annual training updates.

In This Procedure

Following is a list of topics in this Procedure:

1.0 SAFETY CONSIDERATIONS

Health and Safety Plan (HASP)

The most recent version of the HASP is maintained in the treatment building office and provides plans and requirements to protect the health and safety of workers involved in the operation and maintenance of the groundwater extraction and treatment system. All workers must be familiar with and sign the HASP. Specific requirements for Personal Protective Equipment (PPE) are included in the HASP. If there are any discrepancies between PPE requirements included in these procedures and PPE requirements specified in the HASP, the stricter requirements specified shall be followed.

Level of Hazard	**Medium** Hazards associated with this task include handling contaminated sludge and water that contains arsenic. Other hazards include stored energy in the cartridge filter units in the form of high pressure that needs to be relieved prior to any servicing of the filter units. When servicing both filter units, the effluent pumps need to be shut off, locked out, and tagged out prior to performing services on the filter units. The filters will contain groundwater contaminants so appropriate PPE must be worn as defined in the HASP. Due to this risk and the presence of dangerous waste within the closed landfill, all personnel working at the site must be fully trained in accordance with 29 CFR 1910 and WISHA regulations. Forty-hour HAZWOPER training with yearly eight hour refresher training is required for anyone performing work at the B&L Woodwaste Site.

2.0 NORMAL STARTUP OPERATION

Critical Information	The metal housing of each of the two filter vessels contains six filter elements which should be replaced once a pressure differential above 20 psi is reached. Depending on the mode of operation and anticipated solids loading, either one filter vessel or both vessels may be run at a time. Both vessels may be run in parallel by opening both influent and effluent butterfly valves. Both may be run during times of high solids loading (to extend time between change outs) or when trying to achieve a greater flow. One vessel is run at a time by isolating the filter vessel not in use by closing the influent and effluent butterfly valves of the filter cartridge while leaving the other filter vessels' butterfly valves open. The filters will typically be operated one at a time to allow for the operator to change out the cartridges that are clogged without any system down time.

Personal Protective Equipment

Safety Glasses	Nitrile Gloves
Steel Toe Boots (Rubber or Leather)	

Procedure

Step	Normal Operation
1	Open influent and effluent butterfly valves completely for operational cartridge filter unit. Close valves for standby unit.
2	Open vent valve on top of cartridge filter unit to vent air during initial start up. Ensure that vent is secured and pointing to ground as it will begin to discharge water after air is relieved.

3	Close vent valve once air is no longer being relived and a constant stream of water is observed discharging from the valve.
4	Check filter unit for leaks while running water through it. Screws should be tight enough to ensure seal.
5	Check pressure differential when inspecting operational filter unit. Note if differential reaches 20-30 psi range. If so, the flow of wastewater must be switched to other stand by filter unit and the old filter elements need to be replaced and disposed of (Section 3.0 below).
6	Check for spare cartridge filter sets onsite. There should be at least six spare sets of six cartridges onsite at all times. If there are not, order new cartridge filters. Document the status of spare cartridge filters in the weekly plant checklist.
Step	**Parallel Operation**
1	Open influent and effluent butterfly valves on both filter vessels completely.
2	Open vent valve on top of both cartridge filter units to vent air during initial start up. Ensure that vents are secured and pointing to ground as they will begin to discharge water after air is relieved.
3	Close vent valves once air is no longer being relieved and a constant stream of water is observed from both valves.
4	Check filter units for leaks while running water through them. Screws should be tight enough on both units to ensure seal.
5	Check pressure differential when inspecting operational filter units. Note if differential reaches 20-30 psi range. If so, the flow of wastewater must be shut off and the old filter elements need to be replaced and disposed of (Section 3.0 below)
6	Check for spare cartridge filter sets onsite. There should be at least six spare sets of six cartridges onsite at all times. If there are not, order new cartridge filters. Document the status of spare cartridge filters in the weekly plant checklist.

3.0 OPERATION AND MAINTENANCE

Critical Information	The cartridge filters must be removed and replaced once the pressure differential reaches above 20 psi.

Personal Protective Equipment

Safety Glasses	Nitrile Gloves
Steel Toe Boots (Rubber or Leather)	

Procedure

Step	Replacing Filters Normal Operation
1	Open butterfly valves for filter unit to be put into service while changing out cartridges for unit in need of service. Follow startup procedures for "Normal Operation" as discussed above.
2	Close butterfly valves for influent and effluent to isolate filter unit to be serviced.
3	Release pressure in the filter vessel by opening the pressure relief valve on the top of the housing and allowing the vessel to discharge pressurized water. Ensure that the pressure relief valve line is pointed towards the ground in a safe direction as water released initially may be at a high velocity. Allow the water to drain into the secondary containment sump until water no longer flows from the pressure relief valve.
4	Open the hand valve at the bottom of the filter unit being serviced and allow the unit to drain completely out into the sump.
5	Once the filter unit is drained out, unscrew the three oval screws on top of the filter cartridge housing.
6	Remove the six spring/cup devices from the spent cartridges and put aside in a place where they will not get lost or damaged. Slowly pull up on filter cartridge to remove. Take care not to pull up metal guide rod when removing each spent cartridge.
7	Verify that none of the gaskets that are located on the bottom of the filter vessel that seal the bottom of the cartridge to the housing are not stuck to the spent cartridges. If the gasket is stuck, remove from the spent cartridge, clean, and replace in filter housing.
8	Inspect the filter lid gasket for any signs of damage. If the gasket is damaged, replace with a new gasket.
9	Remove and dispose of the six old filter cartridges. Inspect the new filter cartridges to be placed in the unit for any structural damage or tears. If damaged, throw away and replace the damaged filter cartridge. Install the six new filter cartridges into the housing, ensuring to line up the bottom of the new cartridge with the gasket on the bottom of the housing, which is directed by metal guide rods.
10	Replace the six spring/cup devices on top of filter cartridges in the same orientation that they were in prior to removal.
11	Place lid onto spring/cup devices ensuring not to knock any off of the cartridges. Tighten the three oval screws on top of the filter cartridge housing. Screws should be hand tightened to ensure that lid seats properly on housing. Once the lid is aligned and seated properly on the housing, the screws must be fully wrench-tight to ensure a proper seal of the unit is created.
12	Follow startup procedures as discussed above in the "Normal Operation" startup procedures.
Step	**Replacing Filters Parallel Operation**

1	Shut down the groundwater treatment system and extraction wells.
2	Lock out and tag out the effluent pumps.
3	Close effluent and influent butterfly valves for both filter units.
4	Follow steps 3-11 as discussed above in the “Replacing Filters Normal Operation” procedures for each filter unit.
5	Open influent and effluent butterfly valves on both filter housings completely.
6	Open the vent valves on top of both of the cartridge filter units to vent air during initial start up. Ensure that vents are secured and pointing to the ground as they will begin to discharge water after air is relieved when system is turned on.
7	Turn the groundwater treatment system and recovery wells back on.
8	Follow steps 3-6 in the “Parallel Operation” startup procedures.

Procedure

Step	Flushing Filter Vessels During Plant Shutdown
1	If during operation and maintenance of the filter units, excess sludge material is observed in the cartridge filter vessels, it will need to be flushed out requiring a system shutdown. Report excess biomass or solids to process engineer to evaluate whether or not a problem exists or if the system needs to be flushed out with bleach water.
2	With the system shut down, the filter units isolated, and the spent cartridges removed (as discussed in the procedures above), open up the Y-strainer immediately downstream of the filter housing (near the floor before the piping goes underneath the adsorption columns).
3	Using a garden hose, clean out the filter cartridge housing by spraying water on the interior of the housing. The stray solids should flush out of the Y strainer and into the sump.
4	Clean and replace the Y-strainer.
5	Replace the filters as in the procedures discussed above and return the system to normal operation.

STANDARD OPERATION PROCEDURES:
B&L WOODWASTE GROUNDWATER TREATMENT SYSTEM
PROCEDURE P440 - ADSORPTION COLUMNS AND EFFLUENT PH METER
B&L Woodwaste Landfill
Milton, Washington

OPERATION PROCEDURES, GENERAL OVERVIEW

Introduction

This procedure outlines operational procedures for the adsorption columns in the groundwater treatment system at the B&L Woodwaste Site.

Pre-requisites to Do This Procedure

To do this procedure you must:

- Be fully trained for treatment system operations or be training in the area with someone who has been fully trained.
- Be fully trained for handling and management of dangerous wastes.
- Be familiar with all aspects of this operating procedure.
- Be Hazardous Waste Operations (HAZWOPER)-trained and current with annual training updates.

In This Procedure

Following is a list of topics in this Procedure:

1.0 SAFETY CONSIDERATIONS

Health and Safety Plan (HASP)

The HASP maintained in the treatment building provides plans and requirements to protect the health and safety of workers involved in the operation and maintenance of the groundwater extraction and treatment system. All workers must be familiar with and sign the HASP. Specific requirements for Personal Protective Equipment (PPE) are included in the HASP. If there are any discrepancies between PPE requirements included in these procedures and PPE requirements specified in the HASP, the stricter requirements specified shall be followed.

Level of Hazard	**Low** Make sure there is no pressure across columns when opening up for media change. Due to the presence of dangerous waste within the closed landfill, all personnel working at the site must be fully trained in accordance with 29 CFR 1910 and WISHA regulations. Forty-hour Hazardous Waste Operations Training with yearly eight hour refresher training is required for anyone performing work at the B&L Woodwaste Site.

2.0 NORMAL OPERATION

Critical Information	The adsorption columns contain an alumina-based media which is the last "polishing" filter for arsenic. The adsorption columns must be valved the correct way for correct operations.

Personal Protective Equipment

Safety Glasses	Nitrile Gloves
Steel Toe Boots (Leather or Rubber)	

Procedure

Step	Normal Operation
1	Before treatment plant startup, check that the valve path will create a lead and lag column configuration (columns are in series, not parallel). Check each valve against the proper valving diagram in the P&ID or on the valve reference guidance hanging by the adsorbers.
2	The differential pressure indicators should read (nominally) 0 when there is no flow. The PLC will monitor differential pressure level during operation.

3.0 MEDIA CHANGEOUT

Critical Information	Media changeout is necessary when arsenic begins to break through the adsorption columns. Arsenic testing should catch this before arsenic concentrations exceed the NPDES permit limit. NRC or Mar Vac will normally do the media changeout, using a vacuum truck to remove the spent media and assist in filling the adsorbers with new media.

Personal Protective Equipment

Safety Glasses	Nitrile Gloves
Steel Toe Boots (Leather or Rubber)	

Procedure

Step	Media Changeout
1	Confirm that there is a clear path from the rollup door to the media vessels, and surrounding the vessels, to allow for vacuum truck hose access.
2	The spent media will be removed and replaced with new media.
3	The adsorption columns must be filled approximately 2/3 of the way full with potable water to facilitate proper loading of the media.
4	Connect the flange and piping to the top of the adsorber being loaded. The other end of the piping has a funnel and will be located on the mezzanine level to prevent having to lean over the rail to have to load the media.
5	Media will be delivered either in 1 cubic foot sacks or 2,000 super sacks. If media is delivered in 1 cu ft sacks, each sack will need to be carried to the mezzanine level and loaded into the funnel. Each column will require 40 sacks. If a super sack is delivered, a 5 gallon bucket will need to be filled where the super sack is placed (adjacent to the roll off container) and carried to the funnel and loaded into the column. If the 5 gallon buckets are full, it will take 60 filled buckets per column. Once the first adsorber is filled, remove the flange from the second column and place ontop of the second adsorber and repeat the process.
6	When both columns are filled, replace the flange top on each adsorber and verify the valves are in the correct position.

4.0 EFFLUENT pH METER OPERATION AND MAINTENANCE

Critical Information

The pH/ORP transmitter will measure pH after the adsorption columns to act as the compliance monitoring point. The sensor must be maintained properly to correctly monitor the pH.

The retractable insertion-type sensor is installed through a ball valve to enable calibration and maintenance while the process is operational. As the pipe is under pressure during operation, it is very important that when removing the sensor, the proper procedures be followed such that the ball valve is closed before the sensor is fully removed and unscrewed.

Tools/Supplies

Crescent Wrenches	pH Buffer Solutions (pH 4 and 7), approximately a 1” level in individual beakers
Kimwipes	

Personal Protective Equipment

Safety Glasses	Latex or Nitrile Gloves
Hard Hat	

Procedures

The following is an excerpt from the equipment O&M manual, including maintenance, sensor removal from the process, sensor cleaning and calibration. The manual is present in the GWTP office. Refer to that manual for more information.

4.1 Maintenance. The Model 385+ Sensor is a disposal type sensor and therefore requires only periodic cleaning and calibration. If the sensor has failed, it should be discarded and replaced.

4.2 Sensor Removal. Please refer to the appropriate paragraph for instructions regarding removal of the sensor for periodic maintenance.

1. Be certain system pressure at the sensor is below 64 psig (442 kPa) before proceeding with the retraction.

2. Push in on the sensor using the top of the J-box and slowly loosen the hex nut (B) of the process end male connector (A).

3. When the hex nut is loose enough, slowly ease the sensor back completely until the retraction stop collar is reached.

4. Close the ball valve slowly. If there is resistance, the valve may be hitting the sensor. Double check that the sensor has been retracted to the retraction stop collar.

5. The Male Connector Body (A) may now be completely unthreaded from the reducing coupling and the sensor removed for servicing.

4.3 pH Electrode Cleaning. If the electrode is coated or dirty, it may be cleaned as follows:

1. Remove the sensor from process as instructed in Section 4.2.

2. Wipe the glass bulb with a soft, clean, lint free cloth or tissue. If this does not remove the dirt or coating, proceed to step 3. If the sensor appears to be clean, go to step 5.

3. Wash the glass bulb in a strong detergent solution and thoroughly rinse with tap water. If the bulb still appears to have a coating, proceed to step 4.

4. Following the caution above, wash the glass bulb in dilute 5% hydrochloric acid solution and then rinse it thoroughly in tap water. Replace the sensor if it cannot be cleaned. If the glass bulb appears clean, proceed to step 5.

5. Buffer calibrate the sensor. If the sensor appears to respond sluggishly to pH change, soaking it overnight in a weak acid solution (5% hydrochloric acid) may improve its response. Be sure to rinse the sensor's tip thoroughly with tap water. If the sensor will not calibrate, it must be replaced.

4.4 Platinum Electrode Cleaning. Remove any film or dirt by wiping the electrodes platinum band with a clean, lint free, cloth. If needed, a strong detergent should be used to remove any remaining dirt or film. Platinum electrodes can become poisoned by cyanide or sulfide compounds. However, processes involving these compounds (such as cyanide destruction) will destroy all the cyanides or sulfides before they can react with the platinum. Should poisoning occur, the electrode can be restored to normal operation by polishing the platinum (metallic) surface with moistened baking soda (after a strong detergent wash to remove any film on the platinum surface).

4.5 pH CALIBRATION (Once per month)

4.5.1 DESCRIPTION

New sensors must be calibrated before use. Regular recalibration is also necessary. Use auto calibration instead of manual calibration. Auto calibration avoids common pitfalls and reduces errors. The analyzer recognizes the buffers and uses temperature-corrected pH values in the calibration. Once the Model 1056 successfully completes the calibration, it calculates and displays the calibration slope and offset. The slope is reported as the slope at 25°C.

THIS SECTION DESCRIBES HOW TO CALIBRATE THE MODEL 1056 WITH A pH SENSOR. THE FOLLOWING CALIBRATION ROUTINES ARE COVERED.

Measure Sec. Menu function: default Description

pH Auto Calibration - pH 2 point buffer calibration with auto buffer recognition

Manual Calibration - pH 2 point buffer calibration with manual buffer value entry

Entering A Known Slope Value - pH Slope calibration with manual entry of known slope value

Standardization - pH 1 point buffer calibration with manual buffer value entry

A detailed flow diagram is provided at the end of this section to guide you through the calibration routines.

pH Calibration Routines

To calibrate pH:

1. Press the **MENU** button

2. Select Calibrate. Press **ENTER**.

3. Select **Sensor 1** or **Sensor 2** corresponding to pH. Press ENTER.

4. Select **pH**. Press ENTER.

The following screen will appear. To calibrate pH or temperature scroll to the desired item and press ENTER.

S1: 1.234µS/cm 25.0oC

S2: 12.34pH 25.0oC

S*N* Calibrate?

pH

Temperature

4.5.2 AUTO CALIBRATION — pH

This screen appears after selecting **pH calibration**. Note that pH auto calibration criteria can be changed.

The following criteria can be adjusted:

Stabilization time (default 10 sec.)

Stabilization pH value (default 0.02 pH)

Type of Buffer used for AUTO CALIBRATION (default is Standard, non-commercial buffers).

The following commercial buffer tables are recognized by the analyzer:

Standard (NIST plus pH7)

DIN 19267

Ingold

Merck

The following screen will appear to allow adjustment of these criteria:

S1: 1.234µS/cm 25.0oC

S2: 12.34pH 25.0oC

S*N* pH Cal

Buffer Cal

Standardize

Slope: 59.16mV/pH

Offset: 600 mV

S1: 1.234µS/cm 25.0oC

S2: 12.34pH 25.0oC

S*N* Setup

Stable Time: 10 sec

Stable Delta: 0.02 pH

Buffer: Standard

The following sub-sections show the initial display screen that appears for each calibration routine. Use the **flow diagram for pH calibration** and the live screen prompts to complete calibration.

MODEL 1056 CALIBRATION

The following screen will appear if the auto cal is successful. The screen will return to the pH Buffer Cal Menu.

S1: 1.234µS/cm 25.0oC

S2: 12.34pH 25.0oC

S*N* pH Auto Cal

Slope: 59.16 mV/pH

Offset: 60 mV

A High/Low Slope Error will generate this screen display:

S1: 1.234µS/cm 25.0oC

S2: 12.34pH 25.0oC

S*N* pH Auto Cal

High(/Low) Slope Error

Calculated: 62.11 mV/pH

Max: 62.00 mV/pH

Press EXIT

Document calibration and measured values in the monthly Plant checklist.

An Offset Error will generate this screen display:

S1: 1.234µS/cm 25.0oC

S2: 12.34pH 25.0oC

S*N* pH Auto Cal

Offset Error

Calculated: 61.22mV

Max: 60.00mV

Press EXIT

4.5.3 MANUAL CALIBRATION — pH

New sensors must be calibrated before use. Regular recalibration is also necessary. Use manual calibration if non-standard buffers are being used; otherwise, use auto calibration. Auto calibration avoids common pitfalls and reduces errors.

This screen appears after selecting Manual pH calibration.

S1: 1.234µS/cm 25.0oC

S2: 12.34pH 25.0oC

S*N* pH Manual Cal

Buffer 1

Buffer 2

4.5.4 STANDARDIZATION — pH

The pH measured by the Model 1056 analyzer can be changed to match the reading from a second or referee instrument. The process of making the two readings agree is called standardization. During standardization, the difference between the two pH values is converted to the equivalent voltage. The voltage, called the reference offset, is added to all subsequent measured cell voltages before they are converted to pH. If a standardized sensor is placed in a buffer solution, the measured pH will differ from the buffer pH by an amount equivalent to the standardization offset.

S1: 1.234µS/cm 25.0oC

S2: 12.34pH 25.0oC

S*N* Enter Value

07.00pH

4.5.5 ENTERING A KNOWN SLOPE VALUE — pH

If the electrode slope is known from other measurements, it can be entered directly in the Model 1056 analyzer. The slope must be entered as the slope at 25°C.

S1: 1.234µS/cm 25.0oC

S2: 12.34pH 25.0oC

S*N* pH Slope@25oC

59.16 mV/pH

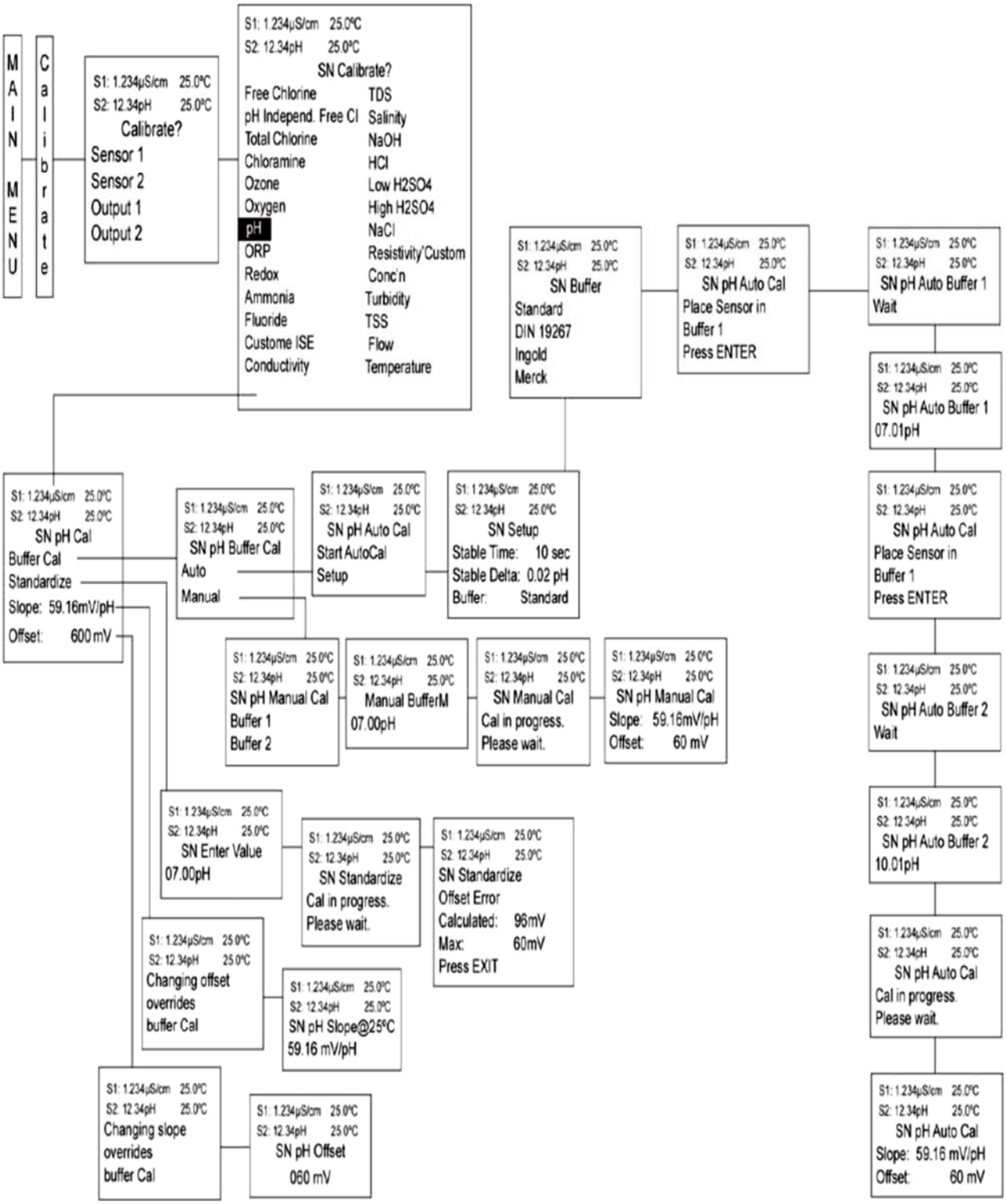
MAIN MENU
Calibrate
S1: 1.234µS/cm 25.0ºC
S2: 12.34pH 25.0ºC
Calibrate?
Sensor 1
Sensor 2
Output 1
Output 2
S1: 1.234µS/cm 25.0ºC
S2: 12.34pH 25.0ºC
SN Calibrate?
Free Chlorine
pH Independ. Free Cl
Total Chlorine
Chloramine
Ozone
Oxygen
pH
ORP
Redox
Ammonia
Fluoride
Custome ISE
Conductivity
TDS
Salinity
NaOH
HCl
Low H2SO4
High H2SO4
NaCl
Resistivity/Custom
Conc'n
Turbidity
TSS
Flow
Temperature
S1: 1.234µS/cm 25.0ºC
S2: 12.34pH 25.0ºC
SN Buffer
Standard
DIN 19267
Ingold
Merck
S1: 1.234µS/cm 25.0ºC
S2: 12.34pH 25.0ºC
SN pH Auto Cal
Place Sensor in
Buffer 1
Press ENTER
S1: 1.234µS/cm 25.0ºC
S2: 12.34pH 25.0ºC
SN pH Auto Buffer 1
Wait
S1: 1.234µS/cm 25.0ºC
S2: 12.34pH 25.0ºC
SN pH Auto Buffer 1
07.01pH
S1: 1.234µS/cm 25.0ºC
S2: 12.34pH 25.0ºC
SN pH Auto Cal
Place Sensor in
Buffer 1
Press ENTER
S1: 1.234µS/cm 25.0ºC
S2: 12.34pH 25.0ºC
SN pH Auto Buffer 2
Wait
S1: 1.234µS/cm 25.0ºC
S2: 12.34pH 25.0ºC
SN pH Auto Buffer 2
10.01pH
S1: 1.234µS/cm 25.0ºC
S2: 12.34pH 25.0ºC
SN pH Auto Cal
Cal in progress.
Please wait.
S1: 1.234µS/cm 25.0ºC
S2: 12.34pH 25.0ºC
SN pH Auto Cal
Slope: 59.16 mV/pH
Offset: 60 mV
S1: 1.234µS/cm 25.0ºC
S2: 12.34pH 25.0ºC
SN pH Cal
Buffer Cal
Standardize
Slope: 59.16mV/pH
Offset: 600 mV
S1: 1.234µS/cm 25.0ºC
S2: 12.34pH 25.0ºC
SN pH Buffer Cal
Auto
Manual
S1: 1.234µS/cm 25.0ºC
S2: 12.34pH 25.0ºC
SN pH Auto Cal
Start AutoCal
Setup
S1: 1.234µS/cm 25.0ºC
S2: 12.34pH 25.0ºC
SN Setup
Stable Time: 10 sec
Stable Delta: 0.02 pH
Buffer: Standard
S1: 1.234µS/cm 25.0ºC
S2: 12.34pH 25.0ºC
SN pH Manual Cal
Buffer 1
Buffer 2
S1: 1.234µS/cm 25.0ºC
S2: 12.34pH 25.0ºC
Manual BufferM
07.00pH
S1: 1.234µS/cm 25.0ºC
S2: 12.34pH 25.0ºC
SN Manual Cal
Cal in progress.
Please wait.
S1: 1.234µS/cm 25.0ºC
S2: 12.34pH 25.0ºC
SN pH Manual Cal
Slope: 59.16mV/pH
Offset: 60 mV
S1: 1.234µS/cm 25.0ºC
S2: 12.34pH 25.0ºC
SN Enter Value
07.00pH
S1: 1.234µS/cm 25.0ºC
S2: 12.34pH 25.0ºC
SN Standardize
Cal in progress.
Please wait.
S1: 1.234µS/cm 25.0ºC
S2: 12.34pH 25.0ºC
SN Standardize
Offset Error
Calculated: 96mV
Max: 60mV
Press EXIT
S1: 1.234µS/cm 25.0ºC
S2: 12.34pH 25.0ºC
Changing offset
overrides
buffer Cal
S1: 1.234µS/cm 25.0ºC
S2: 12.34pH 25.0ºC
SN pH Slope@25ºC
59.16 mV/pH
S1: 1.234µS/cm 25.0ºC
S2: 12.34pH 25.0ºC
Changing slope
overrides
buffer Cal
S1: 1.234µS/cm 25.0ºC
S2: 12.34pH 25.0ºC
SN pH Offset
060 mV

STANDARD OPERATION PROCEDURES:
B&L WOODWASTE GROUNDWATER TREATMENT SYSTEM
PROCEDURE P910 - AIR COMPRESSOR SYSTEM
B&L Woodwaste Landfill
Milton, Washington

OPERATION PROCEDURES, GENERAL OVERVIEW

Introduction

This procedure outlines operational procedures for the air compressor in the B&L Woodwaste groundwater treatment system. The air compressor is used to supply air for the air operated diaphragm pumps, including the clarifier underflow pump. In addition, the filter press itself uses air for several of its operational modes.

Pre-requisites to Do This Procedure

To do this procedure you must:

- Be fully trained for treatment system operations or be training in the area with someone who has been fully trained.
- Be fully trained for handling and management of dangerous wastes.
- Be familiar with all aspects of this operating procedure.
- Be Hazardous Waste Operations (HAZWOPER)-trained and current with annual training updates.

In This Procedure

Following is a list of topics in this Procedure:

1.0 SAFETY CONSIDERATIONS

Health and Safety Plan (HASP)

The HASP maintained in the treatment building provides plans and requirements to protect the health and safety of workers involved in the operation and maintenance of the groundwater extraction and treatment system. All workers must be familiar with and sign the HASP. Specific requirements for Personal Protective Equipment (PPE) are included in the HASP. If there are any discrepancies between PPE requirements included in these procedures and PPE requirements specified in the HASP, the stricter requirements specified shall be followed.

Level of Hazard	**Medium** Use caution when performing maintenance on the air compressor unit. Utilize proper lockout/tagout procedures and ensure that there is no mechanical movement of the compressor during maintenance and troubleshooting. Due to the presence of dangerous waste within the closed landfill, all personnel working at the site must be fully trained in accordance with 29 CFR 1910 and WISHA regulations. Forty-hour Hazardous Waste Operations Training with yearly eight hour refresher training is required for anyone performing work at the B&L Woodwaste Site.

2.0 NORMAL STARTUP AND SHUTDOWN

Critical Information	Procedure for normal startup and shutdown of the Kaeser SK air compressor.

Personal Protective Equipment

Safety Glasses	Nitrile Gloves
Steel Toe Boots (Leather or Rubber)	

Procedure

Step	Normal Startup
1	Ensure that no personnel are working on the machine and that all access doors and panels are closed and secure.
2	Switch on the power supply disconnecting device. After the controller has performed a self-test, the green *POWER ON* LED lights continuously.
3	Press the «ON» key. The green Machine ON LED lights continuously. NOTE: If a power failure occurs, the machine is not prevented from automatic re-starting. It can start automatically again as soon as power is restored.

Procedure

Step	Normal Shutdown
1	Press the «OFF» key. If the machine is running, there will be a rundown time of approximately 15 seconds after pressing the OFF key. If the machine is already in IDLE mode, it will shut off immediately after pressing the OFF key. The machine can be started again as soon as the Machine ON LED is extinguished.
2	Switch off and lock out the power supply disconnecting device. The machine is switched off and isolated from the power supply. The Controller Power LED extinguishes.
3	NOTE: To shut down the compressor immediately in the event of an emergency, press the red EMERGENCY STOP button. The button stays locked and prevents the machine from restarting automatically.

3.0 STARTUP AFTER POWER FAILURE

Critical Information

Procedure for startup of the Kaeser SK air compressor after power failure.

Personal Protective Equipment

Safety Glasses	Nitrile Gloves

Hearing Protection (only for annual relief valve testing)	Steel Toe Boots (Leather or Rubber)

Procedure

Step	Normal Startup
1	The machine will restart on its own as soon as power is restored to the system.
2	CAUTION: Do not work on air compressor parts during a power outage without first locking out the machine at the power source (breaker in MCC).

4.0 PREVENTATIVE MAINTENANCE

Critical Information

Preventative maintenance for the Kaeser SK air compressor.

Tools & Equipment

Lukewarm Water	Household Laundry Detergent
Crescent Wrench	Multimeter
Lockout Padlock	

Procedure

Step	Weekly Maintenance
1	The following maintenance activities should be performed on a weekly basis.
2	Check the belt tension as shown in step 3.

3	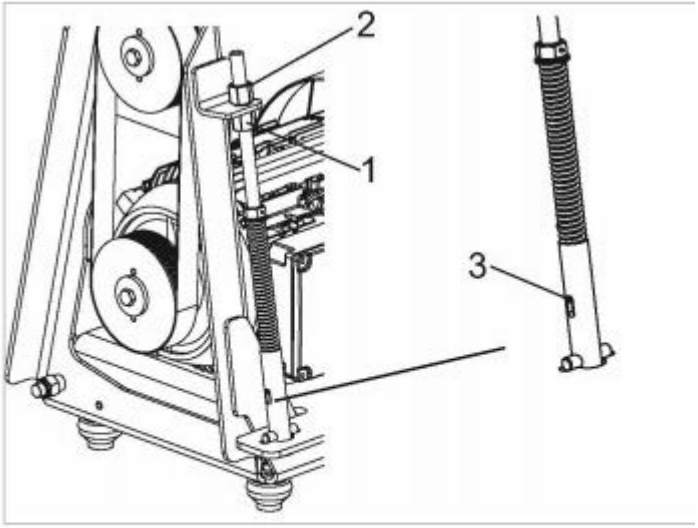 Drive belt maintenance 1 Clamping nut 2 Clamping nut 3 Marker pin (shown as: belt tensioning required) The tensioning device uses spring force to apply correct tension to the belt. Adjust the tension when the marker pin reaches the top end of the elongated hole. The marker pin can be seen through a viewing window from outside. This means that belt tension can be checked without opening the machine.
4	If adjustments are necessary, follow the following procedure.
5	Loosen the locking nut 2.
6	Use the adjusting nut 1 to adjust the spring tension until the marker pin reaches the lower end of the elongated hole.
7	Tighten the locking nut 2.
8	The cooling oil level should also be checked on a weekly basis. Make sure the machine has been running for at least five minutes and check the level: 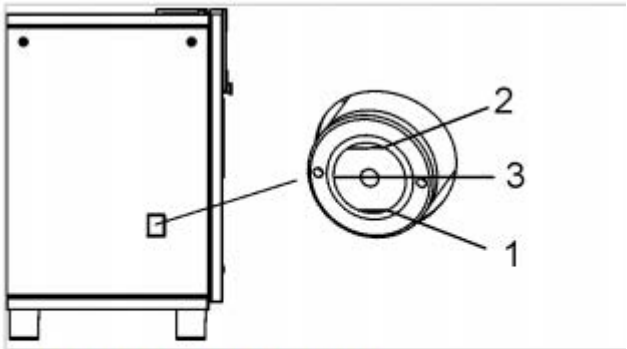 Checking the cooling oil level 1 Minimum oil level 2 Maximum oil level 3 Optimum oil level

9	Turn the machine off and check the filter mat in the cooler:  Filter mat for the air and oil cooler 1 Filter mat
10	Carefully remove the filter mat from the retaining frame.
11	Beat the mat or use a vacuum cleaner to remove loose dirt. If necessary, wash with lukewarm water and household detergent.
12	Change the filter mat if cleaning is not possible or if the change interval has expired.
13	Carefully insert the filter mat in the retaining frame.
14	The filter mats in the control cabinet must also be checked on a weekly basis.
15	Shut off the air compressor (should already be off from procedure 9) and lock it out at the breaker in the MCC room. Test floating relay switches with the multimeter to see that there is no voltage left in system. Ensure that the compressor has cooled down.
16	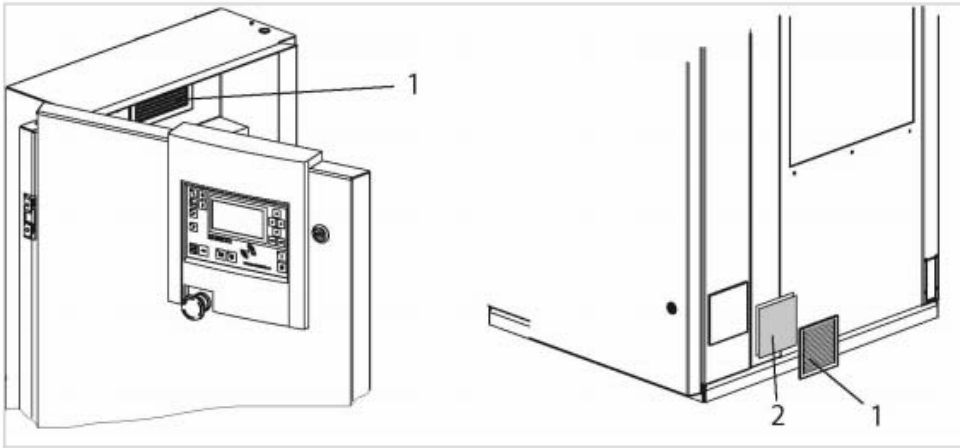 Switching cabinet ventilation 1 Ventilation grill 2 Filter mat
17	Carefully remove the ventilation grill and take out the filter mat.

18	Beat the mat or use a vacuum cleaner to remove loose dirt. If necessary, wash with lukewarm water and household detergent.
19	Change the filter mat if cleaning is not possible or if the change interval has expired.
20	Insert the filter mat in the frame and latch in the ventilation grill.
21	Remove lockout device and return breaker to “ON.”

Procedure

Step	1,000 Hour Maintenance
1	The following maintenance activities should be performed approximately every 1,000 hours of operating time.
2	Power off and lockout the machine at the breaker in the MCC room. Test floating relay switches with the multimeter to see that there is no voltage left in system. Ensure that the machine has cooled down. Check the drive belt.
3	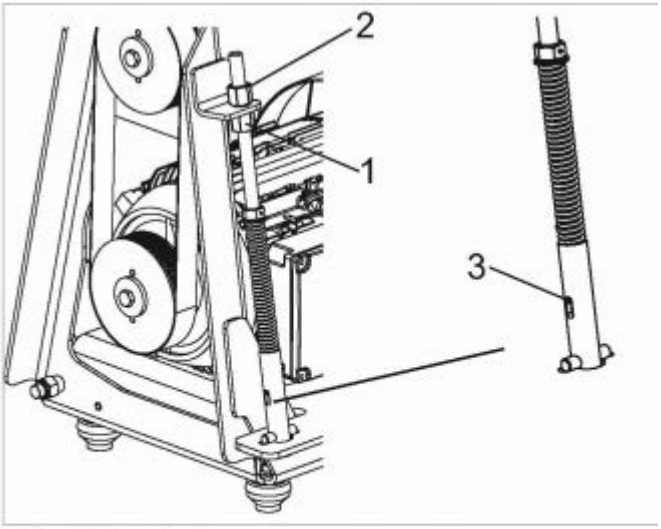 Drive belt maintenance 1 Clamping nut 2 Clamping nut 3 Marker pin (shown as: belt tensioning required)
4	Visually check the drive belt for damages. Turn the pulley by hand so that all of the belt can be inspected.
5	If damage exists, replace the drive belt (following procedure).
6	Check the air filter:

	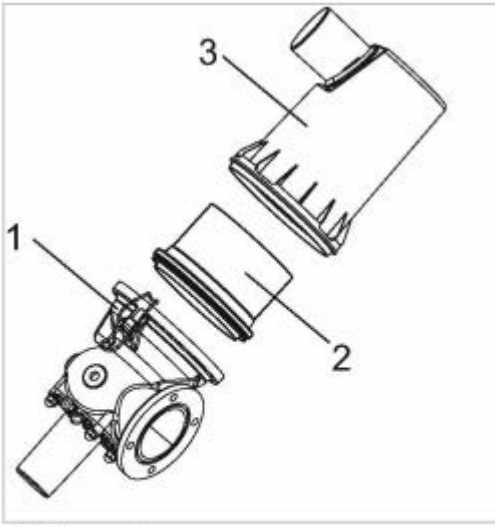 Air filter maintenance 1 Snap fastener 2 Air filter element 3 Air filter housing
7	Visually inspect the air filter. If the filter is excessively dirty and is noticeably letting dirt to ingress the pressure system, replace the filter (see procedure below).
8	Clean the cooler with a duster and vacuum.
9	Remove lockout device from system and return the breaker to the “ON” position.

Procedure

Step	Changing the Drive Belt
1	Power off and lockout the machine at the breaker in the MCC room. Test floating relay switches with the multimeter to see that there is no voltage left in system. Ensure that the machine has cooled down. Check the drive belt.

2	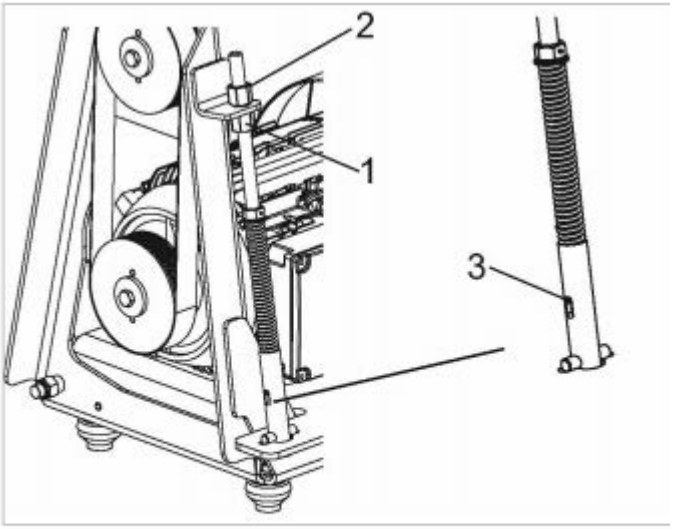 Drive belt maintenance 1 Clamping nut 2 Clamping nut 3 Marker pin (shown as: belt tensioning required)
3	Loosen the locking nut 2.
4	Turn adjusting nut 1 to loosen the tension on the belt until it can be removed from the pulley.
5	Install the new belt and use the adjusting nut 1 to adjust tension until the marker pin reaches the lower end of the elongated hole.
6	Tighten the locking nut 2.

Procedure

Step	Replace Air Filter
1	Power off and lockout the machine at the breaker in the MCC room. Test floating relay switches with the multimeter to see that there is no voltage left in system. Ensure that the machine has cooled down. Check the drive belt.

2	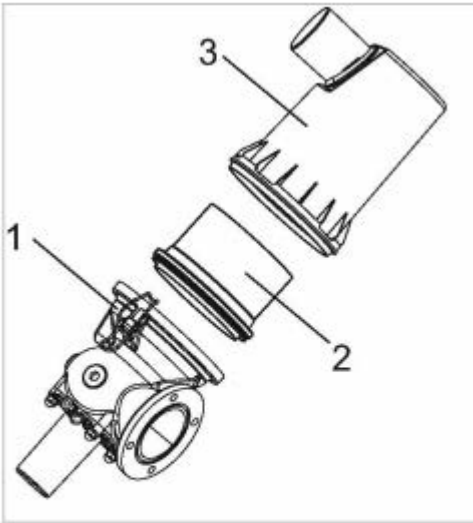 Air filter maintenance 1 Snap fastener 2 Air filter element 3 Air filter housing
3	Release the spring clips and remove the element.
4	Clean all parts and sealing surfaces.
5	Insert the new element in the housing.
6	Clip the air filter housing onto the inlet valve

Procedure

Step	Annual Maintenance
1	The following maintenance actions should be performed on an annual basis.
2	Before proceeding with maintenance, turn off machine.
3	Visually check that all electrical connections are tight.
4	The safety pressure release valve must be tested.
5	Close the user's shut-off valve between the machine and the air distribution network.
6	Read off the activating pressure on the valve. (the activating pressure is usually to be found at the end of the part identification)
7	Scroll to parameter 3 "Pressure relief valve check mode" with the arrow keys and confirm by depressing the «Enter» key for at least three seconds.
8	Enter the password ""“BASIC" and confirm with the «Enter» key.
9	Use the arrow keys to select parameter "on" and confirm.
10	The machine starts in IDLE as soon as it is switched on. As long as the «ON» key is depressed and held, the machine will run in LOAD operating

	mode and pressure builds up in the oil separator tank. As soon as the «ON» key is released, the machine switches back to IDLE and switches automatically to STANDSTILL when the idling period has elapsed.
11	The safety relief valve may blow off at any time! Excessive noise is caused when the safety relief valve blows off! There is danger of scalding from hot oil. There is danger of injury from bursting components and compressed air! ➤Close all access doors and replace and secure all removable panels. ➤Wear ear and eye protection. ➤Abort the test if the working pressure reaches 10 % above the blowoff pressure of the valve.
12	Press the «ON» key for short time. The machine starts in IDLE.
13	Observe the pressure indication on the SIGMA CONTROL BASIC keep the «ON» key pressed.
14	Stop the test as soon as the safety relief valve blows off or working pressure rises to 10 % above the activating pressure of the safety relief valve.
15	If necessary, vent the machine and replace the defective safety relief valve.
16	Call up the edit mode again and enter the password "BASIC".
17	Use the arrow keys to set the parameter to "off" and confirm with the enter key.
18	Open the user's shut-off valve between the machine and the air distribution network.
19	Check the cooler for leaks.

Procedure

Step	Changing Cooling Oil
1	Always change the oil filter and oil separator cartridge when changing the cooling oil (see separate procedures bellow).
2	

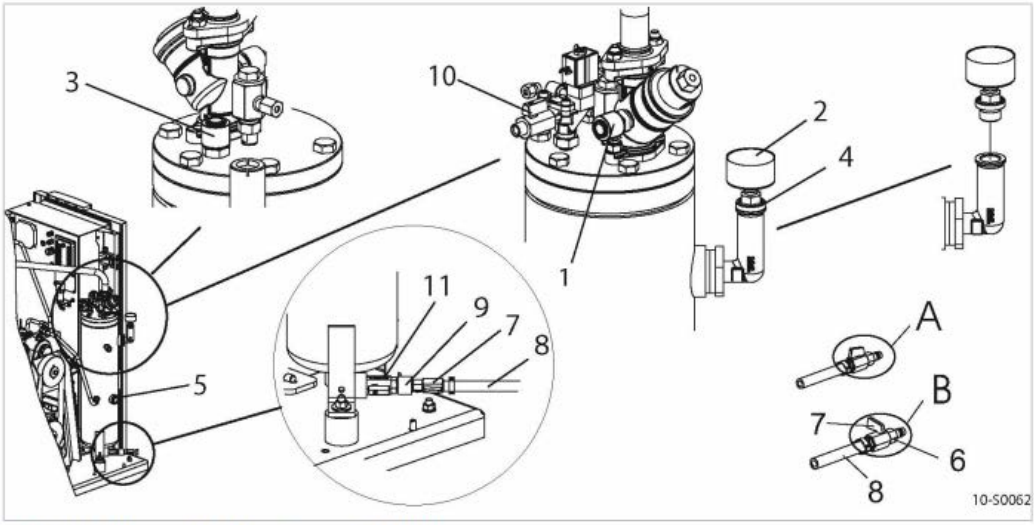

Changing the cooling oil, oil separator tank

1	Hose coupling (air cooler venting)	A	Shut-off valve open
2	Pressure gauge	B	Shut-off valve closed
3	Hose coupling (oil separator tank venting)	8	Maintenance hose
4	Oil filler port with plug	9	Hose coupling (oil drain)
5	Cooling oil level indicator	10	Shut-off valve (venting line)
6	Plug-in nozzle	11	Shut-off valve (oil drain)
7	Shut-off valve		

2	Allow the compressor to run for at least 5 minutes under the “LOAD” setting. Ensure that the machine is fully vented and the pressure gauge on the oil separator tank reads 0psig.
3	Close the shutoff valve (10) in the venting line.
4	Start the machine and watch the oil separator pressure gauge (2) until it reads 43.5-72.5 psig.
5	Switch off the machine. Wait at least two minutes to allow the oil to flow back to the oil separator tank.
6	Lock out the device by turning off the breaker in the MCC room and locking with a LO/TO padlock.
7	Have an oil receptacle nearby.
8	With the shut-off valve closed, insert the male hose fitting (6) into the hose coupling (9) .
9	Place the other end of the maintenance hose in the oil receptacle and secure it in place.
10	Open the shut-off valve (11). Slowly open the shut-off valve (7) in the maintenance hose and allow oil and air to drain completely. Pressure gauge on the oil separator tank indicates 0 psig.
11	Close the shut-off valve (11) and unplug the male hose fitting.
12	Dispose of used oil in accordance with environmental protection regulations.
13	Slowly unscrew the filler plug (4).
14	Fill with cooling oil.
15	Check the filler plug and ring seal for damage and screw the plug back in again.

Procedure

Step	Changing the Oil Filter
1	Turn off the air compressor and lock it out by turning the breaker in the MCC room to “OFF.” Lock the breaker with a LO/TO padlock.
2	Ensure that the machine is fully vented and the pressure gauge on the oil separator tank reads 0 psig.
3	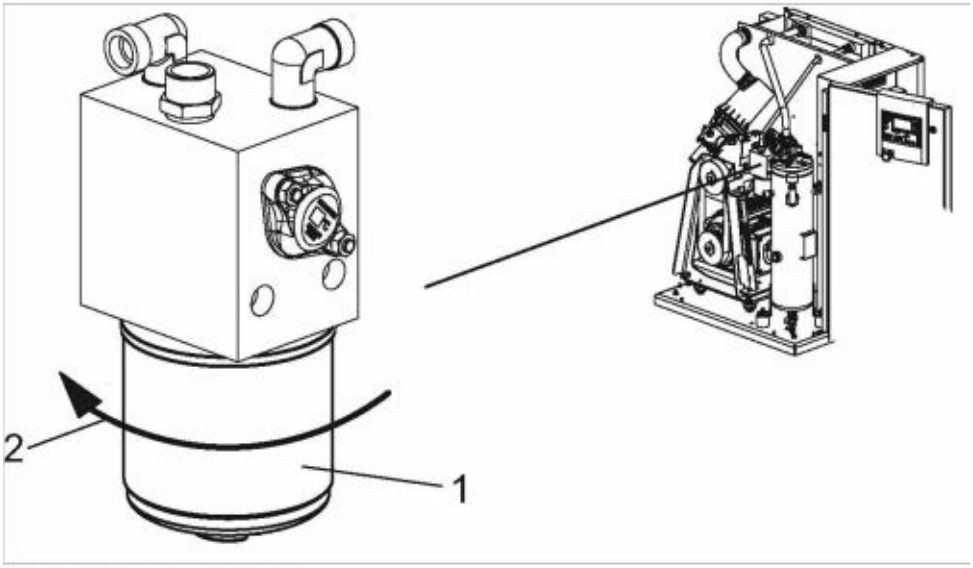 Changing the oil filter 1 Oil filter 2 Direction to unscrew
4	Unscrew the oil filter anti-clockwise, catch oil spillage and dispose of in accordance with environmental protection regulations.
5	Lightly oil the new filter's gasket.
6	Turn the oil filter clockwise by hand to tighten.
7	Close all access doors. Replace and secure all removable panels.
8	Open the user's shut-off valve between the machine and the air distribution network.
9	Switch on the power supply and reset the maintenance interval counter.
10	After approx. 10 minutes of operation: Check the cooling oil level and top up if necessary.
11	Switch off the machine and check visually for leaks.

Step	Changing the Oil Separator Cartridge

1	Turn off the air compressor and lock it out by turning the breaker in the MCC room to “OFF.” Lock the breaker with a LO/TO padlock.
2	Ensure that the machine is fully vented and the pressure gauge on the oil separator tank reads 0 psig.

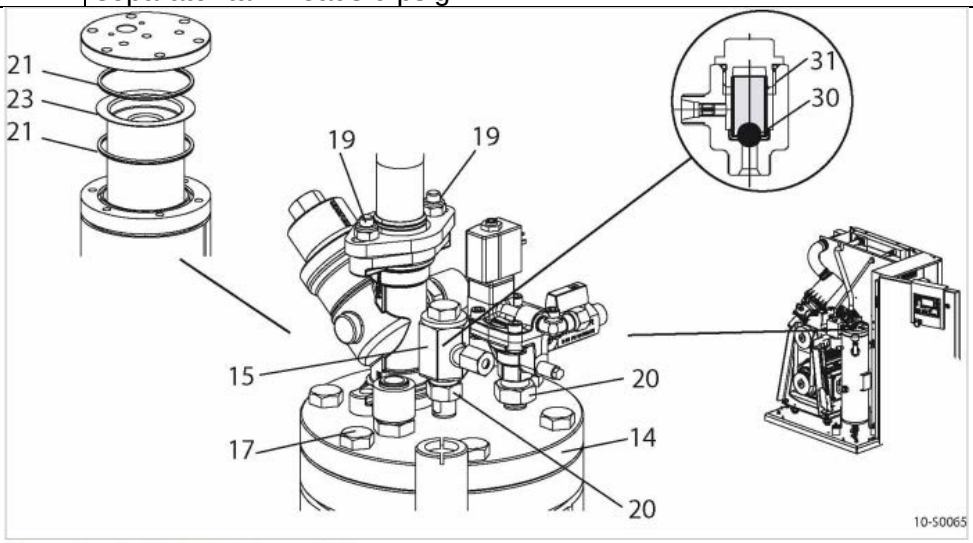

Changing the oil separator cartridge

14	Cover	20	Screw connection
15	Dirt trap	21	Gasket
16	Air pipe	23	Oil separator cartridge
17	Fixing screw	30	Ball (functioning as a check valve)
19	Self-locking nut	31	Strainer

3	Unscrew the fitting (20) and carefully put the parts to one side, then pull out the copper pipe at item 15.
4	Unscrew the nut (19) and turn the air pipe (16) to one side.
5	Remove the cover fixing screws (17) and carefully remove the cover (14).
6	Take out the old oil separator cartridge (23) together with the gaskets (21) and dispose of according to environmental protection regulations.
7	Clean all sealing faces.
8	Insert the new oil separator cartridge with gaskets and screw down the cover.
9	Replace the strainer (31) and O-ring 15 .Make sure the ball (30) is properly seated.
10	Attach the air pipe to the cover (14) with a new, self-locking nut.
11	Replace and tighten all fittings.
12	Close all access doors. Replace and secure all removable panels.
13	Open the user's shut-off valve between the machine and the air distribution network.
14	Switch on the power supply and reset the maintenance interval counter.
15	After approx. 10 minutes of operation: Check the cooling oil level and top up if necessary.
16	Switch off the machine and check visually for leaks.

STANDARD OPERATION PROCEDURES:
B&L WOODWASTE GROUNDWATER TREATMENT SYSTEM
PROCEDURE P940 - SLUDGE DEWATERING SYSTEM
B&L Woodwaste Landfill
Milton, Washington

OPERATION PROCEDURES, GENERAL OVERVIEW

Introduction

This procedure outlines operational procedures for the sludge dewatering system in the B&L Woodwaste groundwater treatment system.

Pre-requisites to Do This Procedure

To do this procedure you must:

- Be fully trained for treatment system operations or be training in the area with someone who has been fully trained.
- Be fully trained for handling and management of dangerous wastes.
- Be familiar with all aspects of this operating procedure.
- Be Hazardous Waste Operations (HAZWOPER)-trained and current with annual training updates.

In This Procedure

Following is a list of topics in this Procedure:

1.0 SAFETY CONSIDERATIONS

Health and Safety Plan (HASP)	The HASP maintained in the treatment building provides plans and requirements to protect the health and safety of workers involved in the operation and maintenance of the groundwater extraction and treatment system. All workers must be familiar with and sign the HASP. Specific requirements for Personal Protective Equipment (PPE) are included in the HASP. If there are any discrepancies between PPE requirements included in these procedures and PPE requirements specified in the HASP, the requirements specified in the HASP shall be followed.
Level of Hazard	**Medium** The sludge dewatering system utilizes large moving machinery. Operators must be cautious and wear appropriate PPE when controlling the system. Due to the presence of Dangerous Waste within the closed landfill, all personnel working at the site must be fully trained in accordance with 29 CFR 1910 and WISHA regulations. Forty-hour Hazardous Waste Operations Training with yearly eight hour refresher training is required for anyone performing work at the B&L Woodwaste Site.

2.0 NORMAL SLUDGE TRANSFER OPERATION

Critical Information	Sludge will be transferred from the bottom of the clarifier to either the sludge tank or the co-precipitation tank by an air diaphragm pump. The pathway of the sludge is controlled by the PLC via a solenoid valve and timer.

Tools/Supplies

Sampling Container (Beaker)	

Personal Protective Equipment

Safety Glasses	Nitrile Gloves
Steel Toe Boots (Leather or Rubber)	

Procedure

Step	Sludge Transfer
1	The PLC contains time settings for the solenoid valves which control sludge transfer from the bottom of the clarifier to the co-precipitation tank and the sludge tank.
2	Set the solenoid timers on the sludge handling screen to discharge a volume equal to the sludge flowing into the clarifier. See the clarifier “Normal Operations” procedure for information on finding this volume.

3	The “BYPASS” box next to the clarifier sludge pump should be set to open one third of the total time sludge is being pumped. When the bypass valve is open, sludge will flow into the sludge tank. Otherwise, sludge will run into the co-precipitation tank. As an example, if the solenoid valve controlling the air diaphragm pump is set on a 30 second cycle (10 on, 20 off), then the sludge bypass should be set to 30 seconds and the sludge bypass off set to 60 seconds. This way, 1/3 of the total pumped sludge will travel to the sludge tank and 2/3 will go to the co-precipitation tank.
4	As described in the clarifier procedure, adjust the pumping rate from the clarifier base after testing the top and bottom effluent taps for sludge. The adjustment will be made on the PLC by increasing time when the solenoid valve carrying air to the first air diaphragm pump is open. This testing should be performed once a week.
5	The second air diaphragm pump will only pump sludge from the sludge tank to the filter press when an auto cycle has begun.

3.0 FILTER PRESS OPERATION

Critical Information

The filter press should be run weekly (or as needed) by an onsite operator. The full cycle will take around four hours to complete, and the operator must be onsite at the finish of the auto cycle to scrape the filter cake off of the filter cloths.

Tools/Supplies

Scraper	

Personal Protective Equipment

Safety Glasses	Nitrile Gloves
Steel Toe Boots (Leather or Rubber)	

Procedure

Step	Filter Press Operation
1	Push the “AUTO CYCLE START” button on the filter press to begin the sludge disposal process. The filter press must be in auto mode for the button to activate the cycle. If filter is in manual mode, simply press the “AUTO MODE” button on the main screen.
2	The filter press will close the ram and drip tray and open the necessary valves to begin sludge flow. The treatment system PLC will receive a signal and turn on the peristaltic pump between the sludge tank and the filter press, which will start sludge flow.

3	Sludge flow will continue into the filter press until a backpressure of approximately 100 psi is reached. This may take four hours or more depending on sludge consistency.
4	After the auto cycle is completed, the drip tray will open and the filter press will depressurize.
5	Pull the pullcord to cycle through filter press plates and pull it again to stop the motion. Make sure to work from the front side of the filter press (with the light curtain). The light curtain will sense any movement near the press and stop press motion in the event that the operator attempts to touch the press when the hydraulic system or plate shifter is active.
6	Scrape the filter cake off of each plate by using the pullcord to cycle through the press. The filter cake should fall through the drip tray hole into the roll-off bin located underneath the press when scraped off using the scraper.
7	Document the sludge dewatering and note the level of waste in the roll-off bin. If the bin is near full, notify Waste Management and coordinate a changeout.

4.0 MIXER OPERATION AND MAINTENANCE

Critical Information

The PMSL PV-2 mixer must be inspected by system operators on a regular basis to detect necessary preventative maintenance. A more rigorous inspection will occur every six months.

Tools/Supplies

Wrench	Screwdrivers

Personal Protective Equipment

Safety Glasses	Latex or Nitrile Gloves
Steel Toe Boots (Rubber or Leather)	

Procedure

Step	Mixer Operation and Maintenance
1	Inspect mixer for unusual sounds, excessive vibration, excessive heat, or grease leakage.
2	If any of these symptoms occur, the mixer must be stopped and the cause determined.
3	Every six months, inspect propeller for evidence of erosion or corrosion.

4	During the six month inspection, check hardware tightness. Re-torque the mixer hardware to original specifications. See torque value in PMSL PV-2 instruction manual (value depends on bolt size).
5	During extended shutdown, run mixer for approximately 10 minutes once a week to coat gears and bearings with grease and to prevent rust due to moisture condensation.

5.0 DIAPHRAGM PUMP OPERATION AND MAINTENANCE

ABOVE-GROUND TRANSFER INSTALLATION

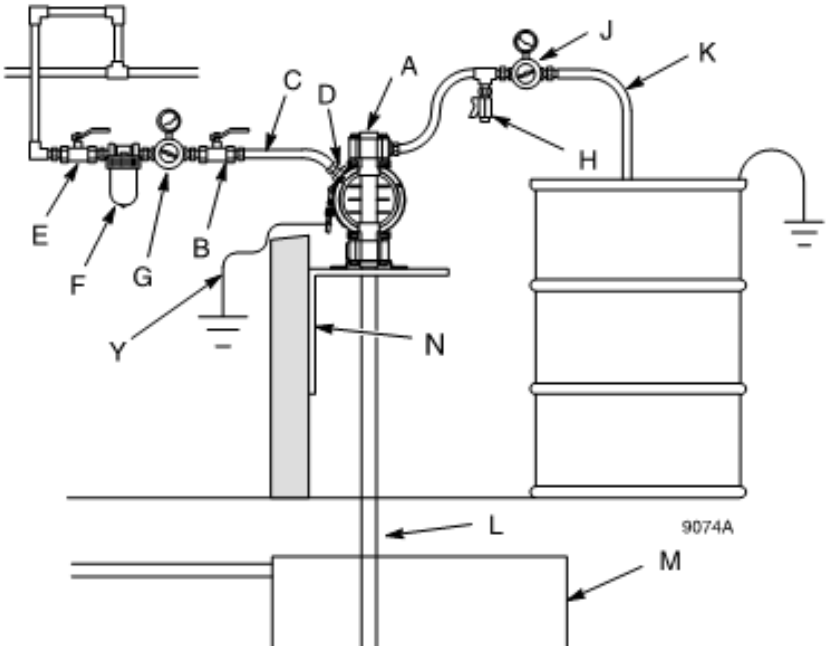

KEY

- A Pump
- B Bleed-type master air valve (required for pump)
- C Electrically conductive air supply line
- D Air line quick disconnect
- E Master air valve (for accessories)
- F Air line filter
- G Pump air regulator
- H Fluid drain valve (required)
- J Fluid regulator (optional)
- K Electrically conductive fluid supply hose
- L Fluid suction line
- M Underground storage tank
- N Wall mounting bracket
- Y Ground wire (required; see page 8 for installation instructions)

Critical Information

One Graco Husky air-powered double diaphragm pump moves sludge from the clarifier to the sludge tank.

Personal Protective Equipment

Safety Glasses	Latex or Nitrile Gloves
Steel Toe Boots (Rubber or Leather)	

Procedure

Step	Diaphragm Pump Preventative Maintenance
1	The air valve is factory lubricated, so no other lubrication should be necessary. If additional lubrication is wanted, add two drops of motor oil to the air valve once every month.
2	Before each use, check all hoses for wear or damage and replace as necessary. Check to be sure all threaded connections are tight and leak-free. Check fasteners. Tighten or re-torque as necessary. Although pump use varies, a general guideline is to re-torque fasteners every two months. See Torque Sequence below.

Husky 515

1. Left/Right Fluid Covers
   Torque bolts to 80–90 in–lb (9–10 N•m)

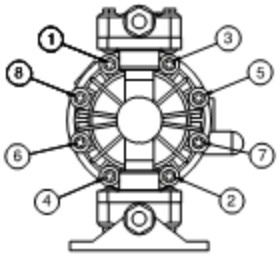

SIDE VIEW

2. Inlet Manifold
   Torque bolts to 80–90 in–lb (9–10 N•m)

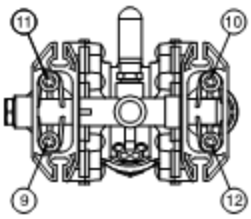

BOTTOM VIEW

3. Outlet Manifold
   Torque bolts to 80–90 in–lb (9–10 N•m)

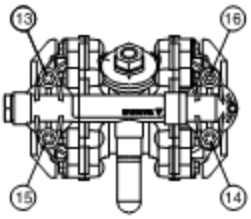

6.0 PERISTALTIC PUMP OPERATION AND MAINTENANCE

Critical Information

The SPX-40 peristaltic pump operating the sludge slurry feed system to the filter press will need preventative maintenance and occasional reactive maintenance. It is important to keep the pump in good operating condition to avoid pump failure that may result in an inability to keep up with sludge inventory. Maintenance activities include checking the lubricant level, changing the lubricant, replacing the pump hose, and changing the gearbox oil. These should be documented for reference during troubleshooting.

In This Procedure

Following is a list of topics in this Procedure:

Tools/Supplies

Funnel	Tray	Wrench

Personal Protective Equipment

Safety Glasses	Latex or Nitrile Gloves
Steel Toe Boots (Rubber or Leather)	

Procedure 6.1

Step	Routine Inspection
1	Check the pump head for any leakage of lubricant around the cover, the flanges and the rear of the pump head.
2	Check the gearbox for any leakage.
3	Check pump for deviating temperature or strange noises.

4	When replacing the pump hose, check pressing shoes for excessive damage.

Procedure 6.2

Step	Checking the Lubricant Level
1	Periodically make sure that the lubricant level is above the minimum level line in the lubricant level inspection window. If the lubricant is below the minimum level line, replace the lubricant per procedure below.

Procedure 6.3

Step	Replacing the Lubricant
1	Place a tray (A) under the drain plug in the bottom of the pump. Remove the drain plug (B). Catch the lubricant from the pump housing in the tray. Check that the sealing ring (C) is not damaged and replace it if necessary. Position the drain plug and tighten it firmly. 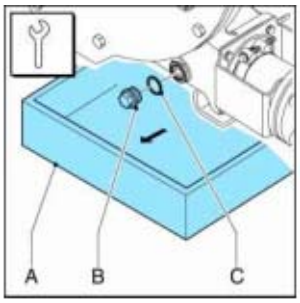
2	The pump can be filled with lubricant (lubricant is green colored and in a clear plastic Watson-Marlow labeled container) via the breather/vent (A) on the rear of the pump housing. For this purpose remove the breather cap (B) and position a funnel (C) in the breather. In order to facilitate the filling with lubricant the plug (D) on the front of the pump housing can be removed. Pour the lubricant in the pump housing via the funnel. Continue until the lubricant level is above the minimum level line. Replace the plug if you removed it. Replace the breather cap. 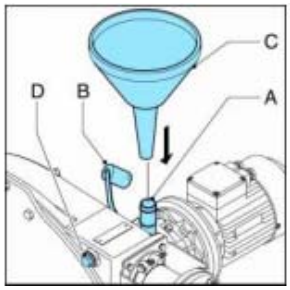

Procedure 6.4

Step	Replacing the Pump Hose (Every Six Months)
1	The pump hose should be replaced preventatively after 75% of its lifetime. Replacing the pump hose every six months should avoid plant shutdown due to unexpected hose rupture.
2	Isolate the pump from the electrical supply using proper lockout/tagout procedures. Turn off lime recirc pump breaker in MCC room and lock with LOTO padlock.
3	Close shut-off valves in both the suction and discharge line to minimize product loss.
4	Place a tray (A) under the drain plug in the bottom of the pump head. The tray must be large enough to contain the lubricant, possibly contaminated with lime, from the pump head. Remove the drain plug (B). Catch the lubricant from the pump housing in the tray. Check that the breather vent mounted on the rear is not obscured. Check that the sealing ring (C) is not damaged and replace it if necessary. Position the drain plug and tighten it firmly. 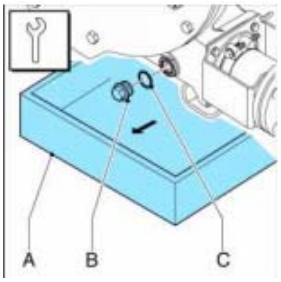
5	Loosen the retaining bolts (A) of both the suction and discharge line (B). Disconnect the suction and discharge lines. 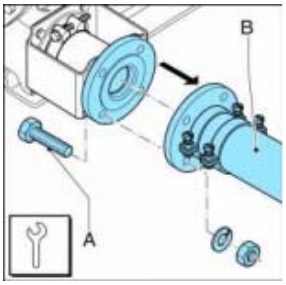
6	Loosen hose clamp (A) of both the inlet and outlet ports by loosening retaining bolt (B). 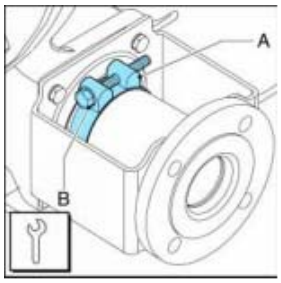

7	Pull the insert (B) from the hose and remove the flanges (A). Carry out this procedure both for the inlet and outlet ports. 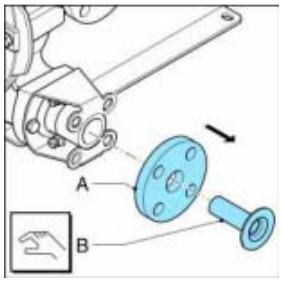
8	Loosen the retaining bolts (A) of the flange bracket (B) and remove the bolts. Slide the flange bracket and the hose clip (C) off the hose. Carry out this procedure both for the inlet and outlet ports. 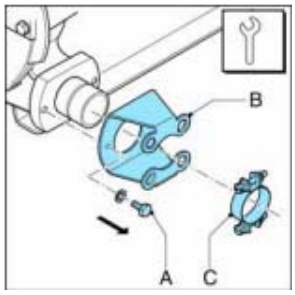
9	Slide off the sealing ring (A). Check that the sealing ring is not deformed or damaged and replace it if necessary. Carry out this procedure both for the inlet and outlet ports. 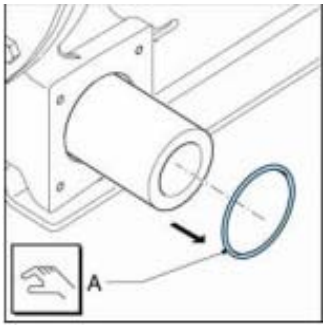
10	Connect the pump to the electrical supply.
11	Remove the hose (A) from the pump chamber by jogging the drive motor to push the hose out of the pump. The speed of the motor can be changed using the manual speed pot in the MCC room. 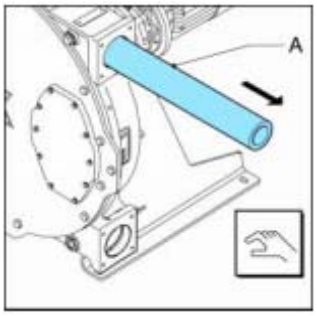

12	Insert new hose into the influent side of the pump.
13	Jog motor to move hose through pump. Use slow speed to move hose through pump. CAUTION: AT FULL SPEED, PUMP ROTATES QUICKLY. DO NOT STAND WITH FACE IN FRONT OF EFFLUENT AND ONLY JOG PUMP VERY BRIEFLY.
14	Replace pump parts by reversing above steps.

Procedure 6.5

Step	Changing Oil in Gearbox (Every 2500 Hours)
1	Isolate the pump from the electrical supply by turning off the lime recirc pump circuit breaker in the MCC room and locking with LOTO padlock.
2	Position a tray under the gearbox. Remove plug (A) and drain the gearbox.
3	The plug (A) is also a magnet so that any metal particles in the oil are pulled to the plug. Clean the plug and remove any metal particles. Check that the sealing ring is not damaged and replace it if necessary. Place the plug back in the gearbox and tighten it firmly. 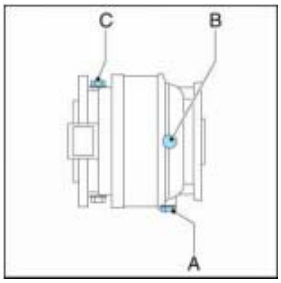

4	Remove level plug (B) and breather (C). Position a funnel in the hole of breather (C) and fill the gearbox with oil (see table below for specified product) until the oil just comes out of the level plug hole (B). Place plug (B) and plug (C) back and tighten them firmly.
5	Switch on the electrical supply to the pump.

Recommended lubricants for the Watson-Marlow Bredel planetary gearboxes*

	-20 °C to 5 °C -4 °F to 41 °F IV 95 min	5 °C to 30 °C 41 °F to 86 °F IV 95 min	5 °C to 50 °C 41 °F to 122 °F IV 95 min	-30 °C to 65 °C -22 °F to 149 °F IV 165 min
ISO 3448	VG 100	VG 150	VG 320	VG 150 - 220
AGIP	Blasia 100	Blasia 150	Blasia 320	Blasia SX 220
ARAL	Drgol BG 100	Drgol BG 150	Drgol BG 220	Drgol PAS 220
BP	Energol GR-XP 100	Energol GR-XP 150	Energol GR-XP 320	Enersyn EXP 22O
CASTROL	Alphamax 100	Alphamax 150	Alphamax 320	Alphasyn PG150
ESSO	Spartan EP 100	Spartan EP 150	Spartan EP 320	Spartan SEP 220
Q8	Goya NT 100	Goya NT 150	Goya NT 320	El Greco 220
I.P.	Mellana 100	Mellana 150	Mellana 320	Telesia Oil 150
MOBIL	Mobilgear XMP 100	Mobilgear XMP 150	Mobilgear XMP 320	Mobilgear SHC XMP 220
SHELL	Omala oil 100	Omala oil 150	Omala oil 320	Omala HD 220
TOTAL FINA ELF	Carter EP 100	Carter EP 150	Carter EP 320	Carter SH 220
KLÜBER	Kluberoil GEM 1-150	Kluberoil GEM 1-150	Kluberoil GEM 1-320	Klubersynth EG 4-220
TEXACO	Meropa 100	Meropa 150	Meropa 320	Pinnacle EP

Tools/Supplies

Funnel	Tray	Wrench
Needle nose Pliers	Hammer	Extraction Tool

Procedure 6.6

Step	Replacing Pump Seal and Wear Ring (If Necessary)
1	Remove the pump hose (refer to above procedure).
2	Isolate the pump from the electrical supply by turning off the lime recirc pump circuit breaker in the MCC room and locking with LOTO padlock.

3	Use lifting hole (D) to move the cover. Remove the cover (B) by loosening the retaining bolts (A). Check the sealing ring (C) of the pump cover for damage. 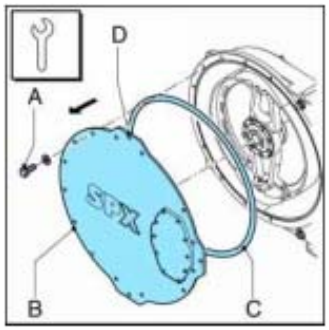
4	Remove the retaining bolts (A) of the drive shaft (B) and remove the drive shaft. Check the sealing ring (C) for damage and replace if necessary. 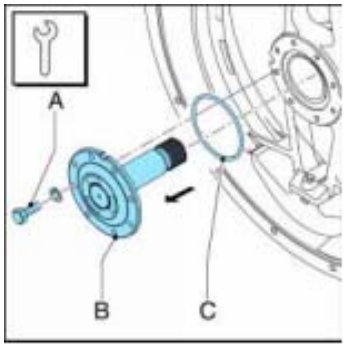
5	Remove the rotor retaining circlip (A), which locks the rotor on the hub. Use needle-nose pliers. 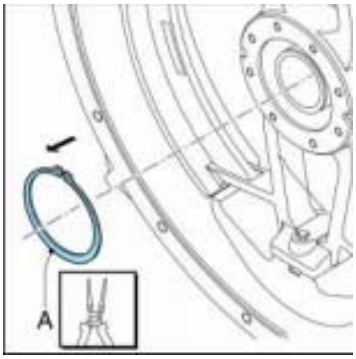

6	Extract the rotor (A) from the hub. A suitable puller or similar extraction tool will be required during this stage of the disassembly. 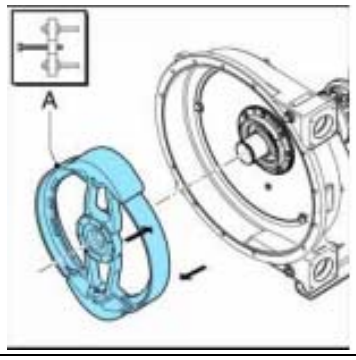
7	Remove the seal (A) from the hub (B). Clean the bore. 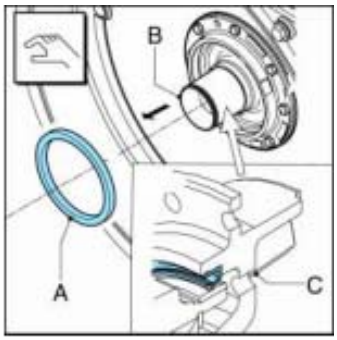
8	Fit a new seal using a wooden block and hammer. Carefully hit the seal crosswise and with equal strength in the bore until it touches the hub. The seal must be fitted in the correct orientation (C). Make sure that the open side points to the pump cover.
9	Support the rotor with wooden blocks at 90° to the spokes, with the ring (A) facing down. Position a punch against the rear of the glued wear ring. Prevent damage to the wear ring seat or other parts. 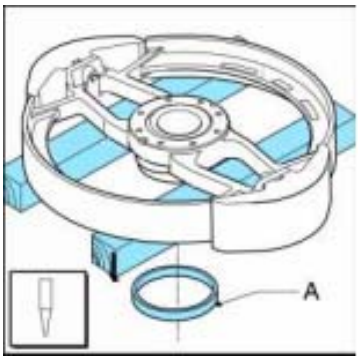

10	Turn the rotor over. Make sure that the seats of the new wear ring (A) and rotor are clean, dry and free of grease. Apply Loctite® type 641 or 603 both on the rotor and the wear ring. Position the new wear ring with the tapered edge facing up. Use a plastic hammer to fit the ring on the rotor until it touches the rotor completely. 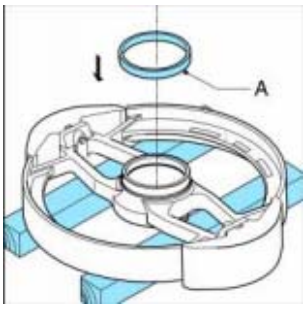
11	Check that the hub is clean and free of grease. Fit rotor (A). The bearings have been placed on the hub with a slight interference fit. Use a pressing tool to press the rotor on the hub. 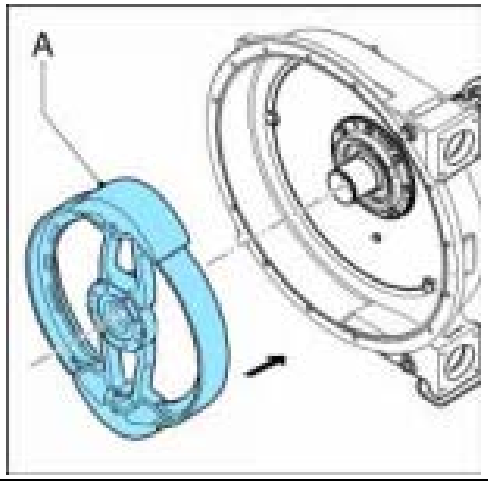
12	Check rotor retaining circlip (A) for any signs of damage and replace if necessary. Refit the circlip. Use needle-nose pliers for this purpose. 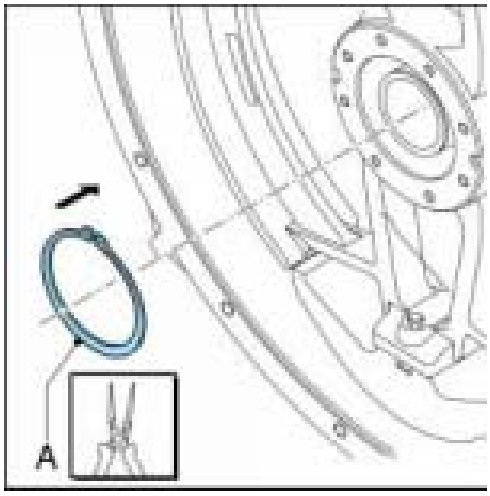

13	Heavily grease the spline (D) of the drive shaft (B) with a graphite-loaded grease. Ensure the mating faces of the drive shaft and rotor are clean, dry and free from lubricant. Check that the sealing ring (C) is not damaged and replace it if necessary. Fit the sealing ring in the groove of the shaft flange. Fit the drive shaft. Turn the rotor until the bolt holes in the drive shaft correspond with the threaded holes in the rotor. Mount the retaining bolts (A) of the drive shaft. Tighten the bolts finger-tight. Tighten them diagonally opposite to each other to the specified torque limits (see figure 2, below). 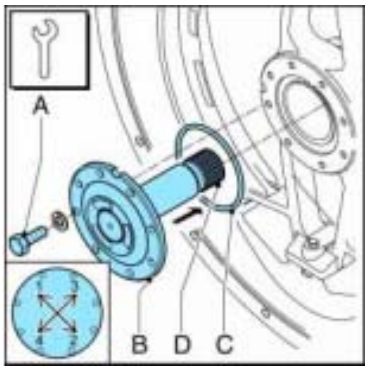
14	Replace the cover and fasten the retaining bolts with the correct torque (see figure 2, below)
15	Switch on the electrical supply to the pump.
16	Fit the (new) pump hose (see procedure above).

Figure 2: Specified Torque Amounts

Pos	Description	Unit	SPX40	SPX50	SPX65	SPX80	SPX100
A	Pressing shoe bolt(s)	Nm	59	103	103	250	250
		lbs in	522	911.6	911.6	2212.5	2212.5
B	Inspection window bolts	Nm	5	8	8	8	8
		lbs in	44.25	70.8	70.8	70.8	70.8
C	Cover bolts	Nm	50	85	210	210	400
		lbs in	442.5	752.25	1858.5	1858.5	3540
D	Hose clamp	Nm	25	40	40	40	40
		lbs in	221.25	354	354	354	354
E	Flange bracket bolts	Nm	25	50	50	85	85
		lbs in	221.25	442.5	442.5	752.25	752.25
F	Drive shaft bolts	Nm	25	50	85	210	210
		lbs in	221.25	442.5	752.25	1858.5	1858.5

Pos	Description	Unit	SPX40	SPX50	SPX65	SPX80	SPX100
G	Hub bolts	Nm	50	50	85	210	210
		lbs in	442.5	442.5	752.25	1858.5	1858.5
H	Support bolts	Nm	50	50	85	210	210
		lbs in	442.5	442.5	752.25	1858.5	1858.5
I	Gearbox bolts	Nm	25	85	85	85	135
		lbs in	221.25	752.25	752.25	752.25	1194.75

Pos	Description	Thread, A/F				
		SPX40	SPX50	SPX65	SPX80	SPX100
A	Pressing shoe bolt(s)	M10 17 mm	M12 19 mm	M12 19 mm	M16 24 mm	M16 24 mm
B	Inspection window bolts	M6 10 mm	M8 13 mm	M8 13 mm	M8 13 mm	M8 13 mm
C	Pump cover bolts	M10 17 mm	M12 19 mm	M16 24 mm	M16 24 mm	M20 30 mm
D	Hose clamp	M8 13 mm	M10 17 mm	M10 17 mm	M10 17 mm	M10 17 mm
E	Flange bracket bolts	M8 13 mm	M10 17 mm	M10 17 mm	M12 19 mm	M12 19 mm
F	Drive shaft bolts	M8 13 mm	M10 17 mm	M12 19 mm	M16 24 mm	M16 24 mm
G	Hub bolts	M10 17 mm	M10 17 mm	M12 19 mm	M16 24 mm	M16 24 mm
H	Support bolts	M10 17 mm	M10 17 mm	M12 19 mm	M16 24 mm	M16 24 mm
I	Gearbox bolts	M8 13 mm	M12 19 mm	M12 19 mm	M12 19 mm	M14 22 mm

Procedure 6.7

Step	Replacing The Pressing Shoes (When there is visible wear on the surface)
1	Jog the motor from the MCC (requires two people) until the pressing shoe (B) is positioned in view of the inspection window (A). 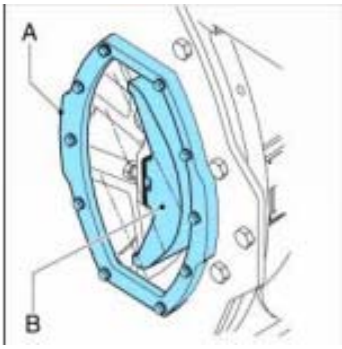
2	Isolate the pump from the electrical supply by turning off the lime recirc pump circuit breaker in the MCC room and locking with LOTO padlock
3	Place a tray (A) under the drain plug (B) in the bottom of the pump head. Remove the drain plug. Drain as much lubricant until the level has lowered just below the inspection window (D). Check that the sealing ring (C) is not damaged and replace it if necessary. Position the drain plug and tighten it firmly. 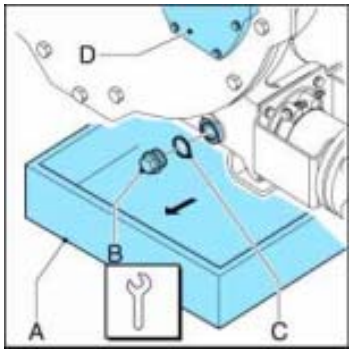
4	Loosen the retaining bolts (A) of the inspection window (B) and remove the bolts. Remove the inspection window. Care must be taken not to damage the gasket (C). 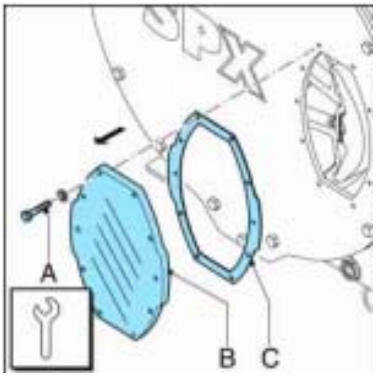

5	Loosen the retaining bolt(s) (A) of pressing shoe (B) a few turns. Remove the shims (C) if present. Loosen the retaining bolt(s) (A) of pressing shoe (B) completely and remove the pressing shoe. 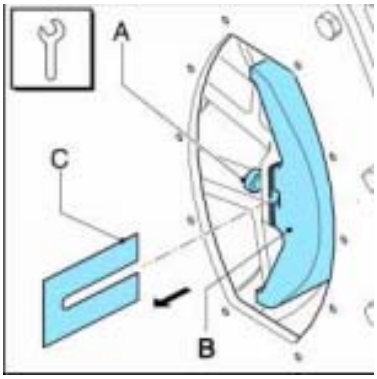
6	Position the (new) pressing shoe (A), check that the NordLock®-rings (B) have been positioned correctly and tighten the retaining bolt(s) a few turns. 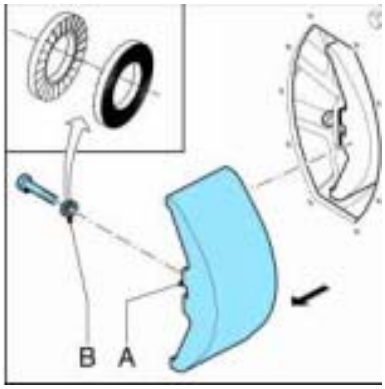
7	Fit the removed shims (A) again. Tighten the retaining bolt(s) (B) with the correct torque (see figure 2). 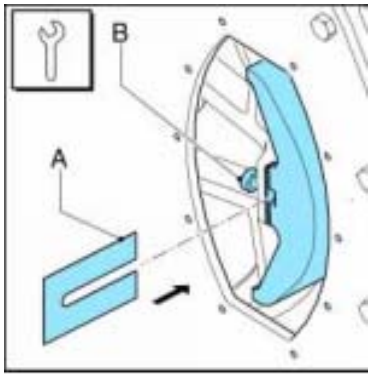

8	Refit the inspection window (B). Check the inspection window gasket (C) for damage and replace if necessary. Make sure that all bolts (A) are refitted and that they are tightened in the correct order, diagonally opposite each other. 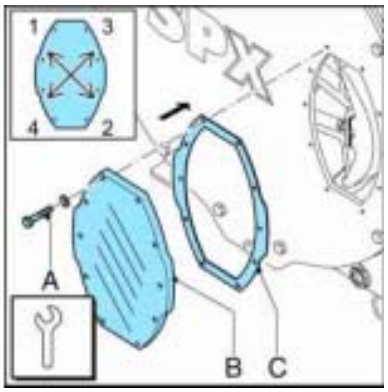
9	Switch on the electrical supply.
10	Jog the motor until the second pressing shoe is positioned in front of the inspection window.
11	Isolate the pump from the electrical supply.
12	Repeat the procedure for removing and fitting this second pressing shoe by repeating steps 4 through 9.
13	Refill the lubricant. Refer to procedure above.

Procedure 6.8

Step	Replacing Bearings (If Necessary)
1	Dismount the pump hose, the cover and rotor by following steps 1 through 6 from hose removal procedure above.
2	Lay the rotor on a flat surface with the wear ring face up. Remove retaining circlip (A) with the correct tools. 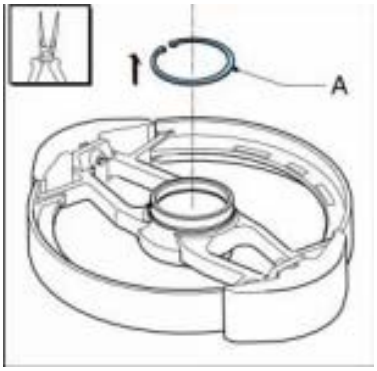

3	Turn the rotor over. Remove using the correct pressing tools, first the first bearing (C), the spacer ring (B) and the second bearing (A) from the rotor. Check the spacer ring for damage. Retain the spacer ring (B). 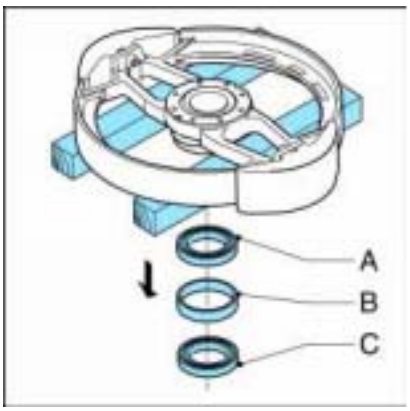
4	Turn the rotor over. Check that the hub is clean and dry. Press using the pressing tool the first bearing (C) in its place. Position the spacer ring (B). Subsequently press the second bearing (A) in its place. 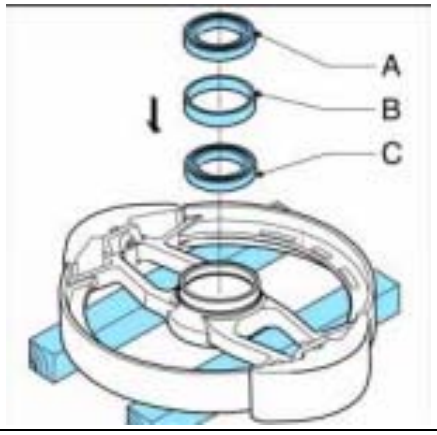
5	Refit the retaining circlip (A) in the rotor. Use the correct tools for this purpose. 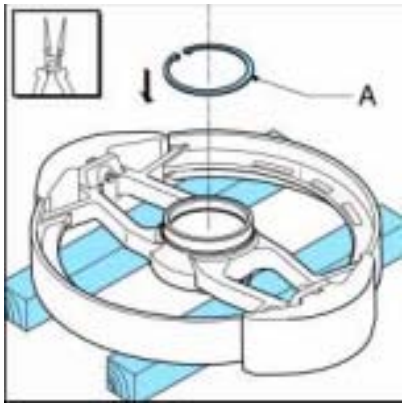
6	Fit the rotor, the cover and pump hose by following steps 11 through 16 from the hose replacement procedure above.

7.0 INSTRUMENTATION OPERATION AND MAINTENANCE

Critical Information

The filter press should be inspected by operators whenever onsite. The daily, weekly, monthly and annual service intervals listed below are suggested by Micronics and generally refer to a filter press that is used more often than weekly.

Personal Protective Equipment

Safety Glasses	Latex or Nitrile Gloves
Steel Toe Boots (Rubber or Leather)	

Procedure

Step	Filter Press Weekly Checks
1	Hydraulic cylinders rod is clean and free from score marks and pitting.
2	Filter cloths are clean relative to the process and last wash cycle.
3	Filter cloths are not ripped, torn, or creased.
4	Plate shifter carriage tracks are clean and free from obstruction.
5	Tension of all mechanized plate shifter chains are in good order.
6	Plate shifter carriage functions in the correct manner and there is no excessive wear.
7	There are no unwanted hydraulic leaks.
8	Fluid level in the power pack is correct (look in sight window on side of HPUI reservoir).

Procedure

Step	Filter Press Monthly Checks
1	All emergency stop buttons function correctly and reset accordingly.
2	No chafed, pinched or cut electrical cables.
3	No chafed, pinched or cut flexible pipes.
4	Filter plates are undamaged.
5	Press frame is undamaged.
6	Bearings and bushings are in good condition.
7	Pressure gauges are functioning and zeroing.

Procedure

Step	Filter Press Annual Service
1	Renew hydraulic oil with the recommended lubricant (see lubrication schedule). Always renew oil filters at this time.
2	Check the performance and running conditions of the whole system. Inspect strainers, locking of relief valves, tank cover and solenoid covers etc. Check fluid temperature and pressure.

Procedure

Step	Filter Press Lubrication Schedule
1	The "*Fully Mechanized Filter Press Lubrication Table* (Modified)" is attached and should be kept onsite and updated as applicable (also found on pages 183-187 of the filter press instructions manual located onsite).
2	Service engineers must perform maintenance according to the lubrication schedule. Be sure to document work performed by checking the respective box and noting in the field book.
3	Preferred lubricant can be found in the pdf file on page four. The locations where lubricant is necessary are on page five.

4. Fully Mechanised Filter Press Lubrication Schedule (All Models)

Press Item	Location	Lubricant	Task	Application	Freq.	J	F	M	A	M	J	J	A	S	O	N	D	Comments
Press Power Pack	A	4a or 4b	Check Oil Level. Investigate any Leaks	Top Up Oil Reservoir As Necessary	Quarterly													
Press Power Pack	A	4a or 4b	Replace Oil Filters	Plan Filter Replacement	Annually													
Press Power Pack	A	4a or 4b	Replace Hydraulic Oil	Fill to Indicator Level on Tank Sight Glass	Annually													
Shifter Drag Chain	B	2a or 2b	Check Condition	Brush on a thin film of oil. Replace if Worn	Quarterly													
Shifter Sprocket Bearings	C	Self Lubricating Sealed for Life	Visually Check Seals For Extruding Grease	Not Serviceable Replace if Leaking	Quarterly													
Secondary Shifter Drive Chain	D	2a or 2b	Check Condition	Brush on a thin film of oil. Replace if Worn	Quarterly													
Primary Shifter Drive Chain	E	2a or 2b	Check Condition	Brush on a thin film of oil	Quarterly													
Hydraulic Drive Motor	E	4a or 4b	Visually Check Drive Shaft Seals For Leaks	Replace if Motor if Worn or Leaking	Quarterly													
Hydraulic Drive Motor	E	4a or 4b	Visually Check Hoses For Leaks	Replace or Leaking	Quarterly													
Press Power Pack	F	4a or 4b	Visually Check Solenoids Valve Seals For Leaks	Plan Seal Replacement	Quarterly													
Press Power Pack	F	4a or 4b	Strip Down Solenoid Valves For Leaks / Wear	Replace Seals As Necessary	Annually													
Drip Tray Pivot Bearings	G	Self Lubricating Sealed for Life	Visually Check Seals For Extruding Grease	Not Serviceable Replace if Leaking	Quarterly													
Drip Tray Cylinder Bushes	H	2a or 2b	Check Condition	Lubricate using an oil can. Replace if Worn	Quarterly													
Press Moving End Slides	I	Self Lubricating	Check Condition	Replace if Worn	Quarterly													
Plate Shifter Pawl Catches	J	2a or 2b	Check Condition	Lubricate using an oil can. Replace if Worn	Quarterly													
Press Hydraulic Cylinder	K	4a or 4b	Check Cylinder Seals For Leaks	Plan Seal Replacement	Quarterly													

5. Low Head Cloth Washer Lubrication Schedule (Use in conjunction with Chart 4)

Press Item	Location	Lubricant	Task	Application	Freq.	J	F	M	A	M	J	J	A	S	O	N	D	Comments
Washer Support Wheels	L	Self Lubricating Sealed for Life	Visually Check Seals For Extruding Grease	Not Serviceable Replace if Leaking	Semiannual													
Primary Washer Drive Chain	M	2a or 2b	Lubricate & Check Condition	Brush Thin Oil Film. Replace if Worn	Semiannual													
Washer Drive Gearboxes	N	1a or 1b	Visually Check Seals For Oil Leaks	Replace Seals if Leaking	Semiannual													
Lead Screw Support Bearings	O	Self Lubricating Sealed for Life	Visually Check Seals For Extruding Grease	Not Serviceable Replace if Leaking	Semiannual													
Lead Screw & Phos. Bronze Nut	P	3a or 3b	Lubricate & Check Condition	Smear with Grease. Replace if Worn	Semiannual													
Wash Head Support Bearings	Q	Self Lubricating Sealed for Life	Visually Check Seals For Extruding Grease	Not Serviceable Replace if Leaking	Semiannual													
Washer Traction Chain	R	2a or 2b	Lubricate & Check Condition	Brush on a thin film of oil. Replace if Worn	Semiannual													

Access to the following items will require that one or more inspection covers or mechanical guards be removed.

- Lead Screw Support Bearings - Location 'O'
- Lead Screw & Phosphor Bronze Nut - Location 'P'
- Wash Head Support Bearings - Location 'Q'

6. Booth Cloth Washer Lubrication Schedule (Use in conjunction with Chart 4)

Press Item	Location	Lubricant	Task	Application	Freq.	J	F	M	A	M	J	J	A	S	O	N	D	Comments
Washer Support Wheels & Drive	L	Self Lubricating Sealed for Life	Visually Check Seals For Extruding Grease	Not Serviceable Replace if Leaking	Semiannual													
Primary Washer Drive Chain	M	3a or 3b	Lubricate & Check Condition	Grease Top Sprocket. Replace if Worn	Semiannual													
Washer Drive Gearboxes	N	1a or 1b	Visually Check Seals For Oil Leaks	Replace Seals if Leaking	Semiannual													
Wash Head Support Bearings	Q	Self Lubricating Sealed for Life	Visually Check Seals For Extruding Grease	Not Serviceable Replace if Leaking	Semiannual													
Washer Traction Rack	S	2a or 2b	Lubricate & Check Condition	Brush Thin Oil Film. Replace if Worn	Semiannual													
Washer Cross Shaft Support Bearing	T	Self Lubricating Sealed for Life	Visually Check Seals For Extruding Grease	Not Serviceable Replace if Leaking	Semiannual													
Wash Head Raise & Lower Drive Chain	U	2a or 2b	Lubricate & Check Condition	Brush Thin Oil Film. Replace if Worn	Semiannual													

Access to the following items will require that one or more inspection covers or mechanical guards be removed.

- Wash Head Support Bearings - Location 'Q'
- Wash Head Raise & Lower Drive Chain - Location 'U'

Recommended Lubricants

Food Grade Lubricants

Gearboxes, Spur & Helical Gears, including Racks.

(1a) Shell FM Gear Oil TLS 150 specifically designed for use in the food industry. It is registered by the NSF (Class H1) for use where there is potential for incidental contact with food.

Chain Drives, Drag Chains, Bath, splash and Drip Lubrication.

(2a) Shell Cassida® Fluid GLE specifically designed for use in the food canning industry. Registered by the NSF (Class H1) for use where there is potential for incidental contact with food. This product line meets the requirements (1998) of the US Department of Agriculture (USDA) for H1 use (lubricant with incidental food contact). Product contains only substances permitted under US 21 CFR 178.3570, 178.3620 and US 21 CFR 182 for use in lubricants with incidental food contact.

Packed Ball & Rolller Bearings, Machine Slides and Drive Lead Screws including Nuts.

(3a) Shell Grease FM 2 is a mineral oil based NSF H1 registered food grade grease. In applications where water contamination is a concern, Shell Grease FM 2 is highly resistant to water washout.

Hydraulic System 'Top–Up' and Re-Filling.

(4a) Shell Hydraulic Oils FM formulated to meet the lubrication requirements of hydraulic systems operated in food processing plants. Shell Hydraulic Oils FM are manufactured in accordance with FDA 21 CFR 178.3570 and meets 1998 USDA guidelines as H-1 lubricant with incidental food contact for use in plants operating under the Federal Meat and Poultry Products Inspection Program. Shell Hydraulic Oils FM is registered with NSF International and are certified Kosher-Parve by the Kosher Overseas Association of America.

The above recommended oils and greases can be exchanged for direct equivalents only.

Non - Food Grade Lubricants

Gearboxes, Spur & Helical Gears, Including Racks.

(1b) Shell FM Gear Oil TLS 150 is a specialty anti-wear gear lubricant which is specifically designed for use in the food and beverage canning industry. It is registered by the NSF (Class H1) for use where there is potential for incidental contact with food.

Chain Drives, Drag Chains, Bath, splash and Drip Lubrication.

(2b) Shell Carnea® Oils E for non-critical light and medium duty applications, where service temperatures are moderate and long service life is not required. ISO Grade 15.

Packed Ball & Rolller Bearings, Machine Slides and Drive Lead Screws including Nuts.

(3b) Shell Albida® Grease HD 1 for heavy-duty industrial applications. Suitable for heavily loaded bearings in very wet environments.

Hydraulic System 'Top–Up' and Re-Filling.

(4b) Shell Tellus® Fluids HD hydraulic fluids based on advanced synthetic hydrocarbon technology. Tellus Fluids HD ISO viscosity grade 32.

The above recommended oils and greases can be exchanged for direct equivalents only.

Appendix B

Control Narrative

Contents

List of Tables

1.0 GLOSSARY OF ACRONYMS

Throughout this Control Narrative, a number of acronyms will be used. The table below lists the acronym and the meaning of the acronym.

Term	Description
HOA	Hand/off/auto – control of device can be switched between local and remote. Status of switch is displayed on HMI.
LO	Low level alarm
LOLO	Low, low level alarm
HI	High level alarm
HIHI	High, high level alarm
PLC	Programmable Logic Controller
SCADA	Supervisory Control And Data Acquisition
PID	Proportional Integral Derivative
HMI	Human-Machine Interface (SCADA terminal)
I/O	Input and Output Signals (control communication)
Lead/Lag	Control scenario which identifies the initiation sequence of the pumps, the lead being the first pump
Interlock	Device (motor, pump, valve) is actuated based on the status of another device (typically an alarm)
Ready Condition	No alarm conditions are preventing normal operation of any sub-system.

1.1 GENERAL PHILOSOPHY OF ALARMS AND WARNINGS

All inputs to the SCADA system are monitored, all control parameters are calculated and all alarm and warning conditions are indicated. All warning and alarm conditions remain indicating until they are both acknowledged and cleared by an operator. All alarms are indicated on the main control panel with a beacon and sound alarm. All warnings and alarms are recorded in the SCADA system warning or alarm log. The log entry includes the source of the warning/ alarm event, the start time of the event, and the time the warning/alarm was acknowledged and cleared.

Alarms and warnings requesting operator call-out must be cleared at the HMI before the system can be returned to normal operation.

1.2 GENERAL PHILOSOPHY OF SYSTEM SHUTDOWN

When a system shut down is initiated by an alarm the following signals will occur in the specified order:

1. Remove run signal from all well pumps (R-1 through and including R-21)
2. Wait 5 seconds, then send close valve signal to valves EV -100, 101, 102.
3. Remove run signal from acid feed, coagulant feed, lime feed, polymer feed, and KMnO4 feed pumps.
4. Lime recirculation pump and all process mixers remain in run mode (EXCEPTION: lime recirculation pump PU-320 shall be shut down in the event of lime/permanganate containment area high level, LAHH-390).
5. Send close signal to the permanganate water valve EV-390, and potable water stop valve SV-980.
6. It is expected that the run signal for pumps PU 420A and B will be interrupted automatically when the level in the pH adjust tank drops to the set shut off level.
7. Recirculate sludge by sending open valve signal to EV-229 and closing EV -221 while maintaining the air compressor and PU-220 in operation.

System shutdown should be initiated when there is a risk of discharging outside the effluent quality limits, a system failure has occurred, or if there is an emergency at the treatment building. Estimated set points for alarms and warnings are included in the following sections but should be refined by operators in the field.

2.0 WELL PUMPS AND ANCILLARY UNITS

2.1 PROCESS DESCRIPTION

There are 10 constant speed well pumps in the recovery wells located outside the landfill area (Wells R-12 – R-21). These will have their flow rates set manually by means of a back pressure valve on the pump discharge in each local well vault and either the local flow meter or a portable ultrasonic flow meter reading. It is expected that the flow rates will range between 0 and 3 gallons per minute (gpm), with existing flow settings as follows:

Well	Flow (gpm)	Well	Flow (gpm)
R-12	2.1	R-17	1
R-13	1.6	R-18	1
R-14	1.6	R-19	1
R-15	1.6	R-20	1
R-16	1	R-21	1

Flow rates for the above wells will be set manually, based on manual field measurements in nearby wells and piezometers. The objective for operation of these wells is to establish and maintain a capture zone adjacent to the wells. In general, these wells are expected to operate continuously. Periodic shutdown may be required during flooding conditions or other conditions affecting performance of the treatment process.

Within the landfill, groundwater elevations are monitored continuously by transducers placed within a series of 19 piezometers distributed around the boundary of the landfill. These piezometers consist of 16 paired piezometers (the pairs designated with an “a” or “b”) that are located on either side of the subsurface barrier wall. These 8 piezometer pairs are used to determine the groundwater gradient across the barrier wall. At three locations, a third piezometer completed in the lower sand aquifer is present (designated “c”). The “c” piezometers are used to determine the upward gradient at these locations. The deeper piezometers are compared to the shallow piezometers to determine the vertical gradient. Inward gradients are determined by subtracting the inside groundwater level (“b” piezometers from the outside level (“a” piezometers) and the upward gradient is determined by subtracting the “b” piezometer reading from the “c” piezometer reading.

The 11 recovery wells (Wells R-1 through R-11) completed beneath the landfill are each equipped with a variable speed well pump. These wells will be under automatic control (speed and on/off) to establish and maintain inward and upward groundwater gradients as determined by the piezometer network. The existing average flow for these wells to achieve the control objective are as follows:

Well	Flow Rate (gpm)	Well	Flow Rate (gpm)
R-1	2	R-7	8
R-2	3	R-8	1
R-3	0	R-9	8
R-4	2	R-10	3
R-5	1	R-11	0.25
R-6	0		

2.2 CONTROL NARRATIVE

2.2.1 General

The principal process control requirements are to:

1. Maintain an inward gradient of at least 6 inches (0.5 feet); i.e. maintain the pump flows within the landfill zone such that the water level beneath the landfill cap is at least six inches below that outside the landfill, and the groundwater tends to enter the landfill area from the outside as a result. This gradient will be measured by the “a” and “b” piezometers. This criterion is a legally enforceable requirement that must be achieved continuously by the groundwater recovery system.
2. Maintain an upward gradient as determined by the “b” and “c” piezometers. No legally enforceable numeric criterion has been established for the upward gradient

The general control strategy for groundwater recovery shall be as follows:

1. Outside Area Recovery Wells (R-12 – R-21)
    a. The PLC shall poll the 10 recovery well pumps to monitor status, and alarm if a pump is turned off.
    b. The PLC shall allow remote control of well pumps, with associated activation/deactivation of pump alarm actuation. If a pump is manually turned off its alarm will also be deactivated until the pump is turned on again.
2. Landfill Recovery Wells (R-1 – R-11)
    a. The PLC shall poll the 19 pressure transducers in the piezometers at an operator-defined frequency, verifying proper operation of each transducer and recording the level measurement. Each transducer will require calibration to convert the reading into a level measurement. The protocol must allow for re-calibration by the operator. Water levels in each piezometer are to be recorded at the polling frequency.

b. Cross wall differential head shall be calculated and recorded at the polling frequency for each of the 8 shallow piezometer pairs, (xx-b and xx-a). This applies to all 8 measurement nodes.
c. Upward differential head shall be calculated and recorded at the polling frequency for the each of the 3 piezometer clusters (xx-b and xx-c).
d. The cross wall differential head will be used for primary control of pumping rates from the landfill recovery wells, with control actions taken at an interval input to the PLC by the operator.
e. The upward gradient will be used for trim control of landfill recovery wells, with control actions taken at an interval input to the PLC by the operator.
f. Total flow will be monitored by the PLC, with total flow readings available for remote monitoring by operators.

2.2.2 Well Pumps

Pump control will be done as described below.

1. Outside Area Recovery Wells (R-12 – R-21)
    a. Well operation will be manual or automatic on/off, with automatic operation determined by operator input, trim control for total flow, or automatic system shutdown.
2. Landfill Area Recovery Wells (R-1 – R-11)
    a. Primary Flow Control
        i. Primary control actions for the PLC will be taken at a time interval to be input by the operator. It is anticipated that control actions will be on the order of once every 8 -12 hours, but the time interval may be longer or shorter.
        ii. Based on groundwater modeling results, the cross wall piezometers have been grouped based on predicted behavior. The PLC will utilize cross wall differential heads in the following manner:

Head Differential	Control Basis
PZ-1a/b	Use calculated head differential for control
PZ-2a/b & PZ-3a/b	Determine minimum head differential and use the minimum for control
PZ-4a/b	Use calculated head differential for control
PZ-5a/b	Use calculated head differential for control

PZ-6a/b & PZ-7a/b	Determine minimum head differential and use the minimum for control
PZ-8a/b	Use calculated head differential for control
PZ-4b/c & PZ-5b/c	Determine minimum head differential and use the minimum for control
PZ-8b/c	Use calculated head differential for control

iii. For each of the 6 cross-wall differential gradients identified above for control, the PLC must provide for 4 action levels to be used for control purposes. The action levels will be input to a lookup table by the operator either locally or remotely. The lookup table will contain cross wall gradient values that will initiate a control action for pumping wells.

iv. For each action level associated with each of the 6 cross wall differentials to be used for control, the PLC will select pumping speeds for recovery wells from a lookup table. The PLC will provide for operator input to associate up to 3 wells with each of the 6 head differentials. The PLC will also provide for operator input of pumping speeds into a lookup table of control setpoints for up to 3 wells associated with each of the 6 head differentials. The speed setpoint lookup table for each head differential would accept 4 speed setpoints for each well to correspond with the 4 action levels described above.

v. The PLC will implement flow control for each of the 11 landfill recovery wells based on the flow control lookup tables for cross wall differential head measured at the 6 head differentials used for control. The operator inputs will associate specific pumping wells with each control head differential, and will be done such that duplicate flow setpoints settings will not be issued for any well (i.e., specific wells will be associated with each control head differential, and no well will be associated with more than one head differential).

b. Trim Control

i. Trim control of the recovery wells will be based upon the upward differential heads determined at the 2 vertical head differentials to be used for control, as identified above (i.e., the head differentials calculated from the xx-c piezometer pairs). For each of the 2 upward control differentials, the PLC will provide for 3 action levels that will be used to implement control actions. The PLC must allow operator input of the action levels for each of the 2 control differentials.

ii. For each of the 2 upward differential head pairs, the PLC will have the capability to implement a control action (i.e., to alter the pumping set point) in wells to be associated with the control differential. The PLC must accept

operator input to associate up to 3 of the 11 landfill recovery wells with either control head differential.

iii. Based on the head differential action levels, the PLC will increment the primary flow setpoints for the associated recovery wells. The PLC will provide the capability for the operator to input the magnitude of the setpoint increments. Three setpoint increment values will be input, to be associated with the three different head differential action levels. The same setpoint increment will be used for the two upward head differentials used for control.

The PLC will also compare the total flow rate for the GWTP (as measured by FIT-100) to an operator-inputted value after each recovery well control action. If the total flow exceeds the input criterion, the PLC will issue an alarm. The purpose of the alarm is to notify remote personnel of high flow conditions that may require operator attention. It is anticipated that the high flow input will be a value between the design average flow rate of 40 gpm and the maximum hydraulic capacity of 60 gpm.

2.2.4 Sanitary Sewer Lift Station

There is a grinder pump and sump for sanitary waste leaving the building. The lift station has a local controller and alarms. The operating status and any alarm conditions from the lift station must be displayed locally and be tied to the PLC for remote logging and reporting purposes.

2.3 ALARMS

Groundwater recovery system reference drawings and system equipment are summarized in Tables 2.1 and 2.2 respectively. Table 2.3 summarizes the alarm conditions and interlocks for the 8 piezometer pairs located around the landfill.

3.0 CHEMICAL OXIDATION SYSTEM

3.1 CONTROL NARRATIVE

3.1.1 Inlet Piping

Pumping of groundwater will be controlled at the PLC (refer to Section 3 for well field controls). Wells in the Landfill A, Landfill B and Wetland/East Boundary areas are piped to the treatment building and into the head tank in three separate lines. The lines can each be shut off/on locally via a manual gate valve and remotely via a solenoid valve. The position of the solenoid valve is both displayed on the HMI and can be manipulated by the operator at the HMI. The solenoid valves and well pumps are also interlocked to the high level switch in the head tank and are shut off when the HI level alarm is triggered by a float valve.

3.1.2 Head Tank

The water level in the head tank is determined by the inflow from the wells and outflow from the tank. A high level float switch (LSH-100) located in the head tank is triggered when the water level reaches a near overflow state. At this level the solenoid valves EV-100, EV-101, and EV-102 are triggered to shut and all 21 well pumps are triggered to shut off and an alarm is sounded at the PLC and a call out to warn the operator. Water flows out of the head tank to the oxidation tank by gravity and can be shut off/on locally via a gate valve. Normally this valve will be in the open position. A flow meter located between the head and oxidation tank continuously measures the flow from the head tank and displays this value both locally and on the HMI. Flow is displayed as it is measured in real time and as a total flow on the HMI. Total flow is calculated by the PLC based on the pulse output from the flowmeter. An alarm on the HMI is triggered when the flow is either above a set HI value or below a set LO value. The flow measurement is used to control the KMnO4 dosing pumps.

3.1.3 Dosing System

The KMnO4 feed solution will be prepared manually by the operator. The KMnO4 is stirred in the dosing tank (TK-310) by a mixer on a batch basis. The mixer is a constant speed mixer and can be shut on/off locally via an HOA switch. The status of the mixer (on/off) is displayed on the PLC. The mixer needs to operate only when a new batch of solution is being mixed; once the solid permanganate is fully dissolved the mixer will be shut off. This mixer shutoff will be via an operator-adjustable timer. KMnO4 solution is mixed in the tank on a manually controlled batch basis.

Granular, crystalline KMnO4 is loaded into the dosing tank manually by an operator by dumping 5 gallon pails into the dosing tank. Clean water is also added to the dosing tank to achieve the target KMnO4 concentration as specified in the current addition of the O&M Manual and is determined by the water level in the tank. The solenoid valve (EV-390) on the water line will be manually opened by selecting the begin batch button and automatically closed by the PLC when the level sensor reaches the HI level. A hand valve on the water line allows the water to be shut

on/off manually in case of solenoid valve failure. Normally the water line valves will be closed and will only be switched open when a batch is being mixed.

The solution level in the tank is monitored by an ultrasonic level meter and is displayed both locally and on the HMI. When the water level measured reaches the LO or HI level a warning alarm is triggered by the PLC and displayed on the HMI. At the low level a new batch should be made. At the high level the water line solenoid valve (EV-390) is closed. The dosing tank is equipped with a float switch which triggers at the HIHI level, indicating the tank level is nearing overflow. When the switch reaches the HIHI water level an alarm is triggered on the PLC and a callout is sent to the operator. Both the level switch and level sensor trigger alarms at the high water level as a safety measure in case either device fails.

Outflow from the dosing tank is pumped via one of two diaphragm metering pumps on the dosing skid to the oxidation tank. Only one pump will normally operate, as the second pump is an installed spare. Control of the pumps is via HOA switches. The status of the pump (on, off) is displayed on the PLC. Isolation valves for pump servicing are located upstream and downstream of each pump and can be manually manipulated. In the event that a pump is operating against a closed isolation valve, or other downstream blockage (automatic block valve failure, back pressure valve failure) each pump discharge is equipped with a pressure relief valve that discharges back to the KMnO4 tank. The pumps are variable speed and will dose automatically proportional to the flow of wastewater into the oxidation tank based on a ratio input by the operator. This ratio will need to be adjusted as necessary by the operator given the concentration of oxidizable constituents in the groundwater. In addition, the pump stroke length can be manually adjusted by the operator. Pressure in the pump discharge line is measured and displayed locally.

3.1.4 Oxidation Tank

ORP is analyzed in the oxidation tank via a probe and displayed locally and on the HMI. The target ORP level is 600 mV. Alarms are triggered on the HMI when the ORP reaches a LO or HI level resulting in a callout alarm alerting the operator to a possible failure in the KMnO4 dosing pumps, valve, lines etc. If the ORP level reaches the HIHI or LOLO set point another alarm is triggered and a call out is sent to the operator and a system shutdown occurs. The LOLO level indicates the treatment plant may not meet discharge requirements and therefore the treatment system is shut down. The HIHI level indicates the treatment plant may be discharging permanganate to the north pond and therefore the system is shut down.

Flow is discharged from the oxidation tank by gravity when the water level in the tank reaches the outlet pipe near the top of the tank. The oxidation tank is continuously stirred by a constant speed mixer which is controlled via an HOA switch. The status of the mixer (on, off) is displayed on the HMI.

3.2 ALARMS

Oxidation system reference drawings and system equipment are summarized in Tables 3.1 and 3.2 respectively. Table 3.3 summarizes the alarm conditions and interlocks associated with the oxidation system.

4.0 CO-PRECIPITATION SYSTEM

4.1 CONTROL NARRATIVE

4.1.1 Co-Precipitation Tank

Wastewater flows by gravity from the oxidation tank into the co-precipitation tank (TK-120) where lime and coagulant are added. Flow from the sludge sump can be recirculated into the co-precipitation tank as needed (see Section 8 Sludge Management). The lime slurry piping to the co- precipitation tank is flushed periodically with clean water to prevent clogging. The co-precipitation tank is continuously mixed at a constant speed manually set by the operator and the status (on, off, speed) is displayed on the HMI. Control of the mixer is via a HOA switch.

pH is monitored in the co-precipitation tank and displayed locally and on the HMI. The pH in the co-precipitation tank is controlled through the use of a PID loop that controls the pump speed for the lime dosing pump, PU-325 (see Section 4.1.2). Lime flow will always be maintained in the recirculation lime pump loop, with the exception that if there is a high level in the lime/permanganate containment area, the lime recirculation pump (PU-320) will shut down. If the pH is low more lime is directed to the co-precipitation tank by increasing the pump speed for the lime dosing pump. An alarm is triggered on the HMI if the pH reaches a set LO or HI and a call out is made warning the operator that the pH is outside operating limits and a failure may have occurred (piping, dosing pump etc.). At a LOLO or HIHI pH, an alarm is triggered, a call out is sent to the operator, and the shutdown sequence is initiated. The pH will be maintained above an operator defined level to ensure iron and arsenic are precipitated.

4.1.2 Lime Slurry Dosing

Lime slurry is delivered to the treatment building in bulk via a truck. The truck pumps the slurry into the storage tank through an outside connection. Flow in this line is isolated by a manual gate valve which the operator will open during tank fill up. An ultrasonic level sensor in the lime storage tank measures the water level and displays the value locally and on the HMI. The PLC will signal an alarm when the sensor detects either a low or high lime slurry level. If the low level alarm is triggered the operator is warned that the storage tanks needs to be refilled. If the high level alarm is triggered the slurry level is above operating limits. This alarm should only occur during lime slurry addition or dilution when an operator will be on site to manually shut off the flow of lime slurry or potable water. The tank is also equipped with a level switch which triggers an alarm on the HMI and sends a call out to the operator at the HIHI level when the tank is nearing overflow. The level sensor and level switch both alarm at a high slurry level as a safety measure in the event of the failure of either device.

The lime slurry tank is mixed at a constant speed and controlled HOA. The status of the mixer (on, off) is displayed on the HMI. The mixer can be shut off for servicing and maintenance but normally is run continuously.

Lime slurry is pumped in and out of the tank to reduce sedimentation effects via a peristaltic pump (PU-320). This pump is a constant speed pump and controlled HOA. The status of the pump (on, off) is displayed on the HMI. Isolation valves located directly upstream and downstream of the pump can be manually shut off to allow for pump servicing but normally these valves will be open. A pressure indicator located downstream of the pump is displayed locally. The pump also has indication of a hose break. Flow from the lime recirculation pump is connected to a small peristaltic pump (PU-325) where the lime is pumped into the co-precipitation pump as controlled by the PID loop. In the event of a controlled plant shutdown, the lime dosing pump will be shut off to avoid lime being overdosed to the co-precipitation tank.

The lime slurry dosing system and KMnO4 dosing system are located inside a dedicated containment area. A float switch in the containment area will trigger an alarm and will call out to the operator when the level in the containment reaches the HIHI level, warning the operator via the PLC that the containment is near overflow. In that case, the lime recirculation pump (PU-320) will shut down.

4.1.3 Coagulant Dosing

Coagulant is delivered to the site in 55 gallon drums. The drums are placed adjacent to the polymer dosing skid and a small diaphragm pump (PU-326) is hooked up to the new drum to dose into the co-precipitation tank. The coagulant dosing pump doses into the co-precipitation tank at a flow rate proportional to the influent flow into the plant (dosing ratio). The dosing ratio is set by the operator on the HMI and the PLC controls the pump speed to adjust the flow to match the dosing ratio based on the influent flow rate. The coagulant dosing pump may be run in HOA as indicated locally. The pump speed will be indicated on the HMI adjacent to the dosing ratio.

Isolation valves located directly upstream and downstream of the pump can be manually shut off to allow for pump servicing but normally these valves will be open. A pressure indicator located downstream of the pump is displayed locally.

4.2 ALARM

Co-precipitation system reference drawings and system equipment are summarized in Tables 4.1 and 4.2 respectively. Table 4.3 summarizes the alarm conditions and interlocks associated with the co-precipitation system.

5.0 SETTLING SYSTEM

5.1 CONTROL NARRATIVE

5.1.1 Clarifier Skid

Water flows by gravity from the co-precipitation tank up into the flash mix tank. The water level in the flash mix tank, flocculation tank and clarifier is constant, as slurry in each case is discharged over a weir into the next tank. From the clarifier the effluent is discharged to the pH adjust tank by gravity. Solids from the clarifier are pumped into the sludge tank. Sludge can also be recirculated to the co-precipitation tank as described in Section 8. The flash mix tank and flocculation tank are each stirred by a mixer. The flash mixer is constant speed, the flocculation tank mixer is variable speed controlled at the MCC. The mixers are controlled via an HOA switch and the status of both mixers (on, off) is displayed on the HMI.

5.1.2 Polymer Dosing

Polymer is delivered as neat polymer in pails which are loaded into a cone bottom tank that is connected to the polymer make down skid by the operator. The polymer make down skid automatically dilutes the neat polymer to an operator adjusted strength and stores it in the polymer dosing tank. The capacity of the polymer dosing tank is 60 gallons. A signal is sent by the PLC to the polymer make-down skid when the level sensor detects a set low level, indicating a new batch of polymer is needed. The polymer make-down skid will automatically add the correct amount of neat polymer and clean water to achieve the correct dilution in the dosing tank. The neat polymer dose is adjusted manually on the polymer skid diaphragm pump by adjusting the pump speed. The clean water flow is adjusted by adjusted hand valves and measuring the resulting flow on two rotometers located on the polymer dosing skid.

The level sensor installed in the storage tank is displayed locally and on the HMI. When the sensor detects a LO signal, the PLC sends a digital signal to the polymer makedown skid to make a new batch of polymer. When the sensor detects a HI signal, the PLC triggers an alarm warning the operator of a possible failure. A pressure transducer is installed in the polymer storage tank, the transducer level is displayed on the HMI and when the pressure transducer detects a LOLO level in the polymer storage tank as input by an operator in the HMI, the PLC initiates an alarm and the shutdown sequence for the plant is initiated. A level switch is installed in the storage tank which triggers an alarm at the HIHI. The alarm is displayed on the HMI and a call out is sent to the operator.

The storage tank is continuously stirred via a variable speed mixer. The mixer is controlled HOA and the status of the mixer (on, off, speed) is displayed on the HMI. The speed on the mixer can only be adjusted manually at the tank. Once the optimal speed is determined the mixer will normally operate at this constant speed.

Dilute polymer solution is pumped out of this tank to the clarifier and sludge tank via two Moyno (progressive cavity) pumps on the dosing skid. Isolation valves for pump servicing are located

upstream and downstream of each pump and can be manually manipulated. In the event that a pump is operating against a closed isolation valve or other downstream blockage (automatic block valve failure, back pressure valve failure), each pump discharge is equipped with a pressure relief valve that discharges back to the storage tank. Flow from the storage tank can be divided between the two pumps which allows for flexibility in the system. When polymer is only needed in the clarifier, one pump will be operational while the second acts as an online spare. When polymer is needed in the sludge tank, one pump (PU-330 A or B) can be directed to the sludge line by manipulation of the manual valves and adjustment of the pump speed. In the event of a failure of the first pump, polymer can be directed to the clarifier via the second pump. The speed of the dosing pumps can be adjusted locally, or by the PLC to keep pace with the influent flowrate (FIT-100). It is set based on the incoming groundwater flow at a volumetric rate of polymer to groundwater flow. This proportion can be adjusted manually by operators as required based on treatment system performance. The speed of each pump can be controlled independently HOA, with the status displayed on the HMI. Pressure in the pump discharge lines is measured and displayed locally via a pressure gauge.

5.2 ALARMS

The settling system reference drawings and system equipment are summarized in Tables 5.1 and 5.2 respectively. Table 5.3 summarizes the alarm conditions and interlocks associated with the settling system.

6.0 PH ADJUST SYSTEM

6.1 CONTROL NARRATIVE

6.1.1 pH Adjust Tank

Water flows by gravity into the pH adjust tank where it is mixed with sulfuric acid. The tank is equipped with a mixer, pH sensor, ultrasonic level sensor and level switch. The mixer is a constant speed mixer which runs continuously and can be shut off/on via a HOA switch. The status of the mixer (on, off) is displayed on the HMI.

pH is monitored in the pH adjust tank with the real time reading displayed both locally and on the HMI. The pH is used to control the speed of the acid dosing pumps to maintain the pH in the tank to an operator defined value. An alarm is signaled by the PLC when the pH reaches a LO level resulting in an operator call out. When a LOLO is reached in the pH adjust tank, a system shutdown is initiated.

The water level in the tank measured by the ultrasonic level sensor is displayed locally and on the HMI. When the level sensor detects a set LOLO, LO, or HI level the PLC triggers an alarm on the HMI. At the LOLO level, the mixers are shut off. At the LO level set point the discharge pumps (PU 420 A and B) are shut off. At the HI level set point the inlet valves and well pumps are shut off. A float level switch in the pH adjust tank triggers an alarm on the HMI and triggers the autodialer when the water level reaches the HIHI and is near to overflowing, warning the operator of a failure and the system shutdown sequence is initiated. The level sensor and level switch both signal alarms via the PLC when the water level is high, as a safety measure in case either device fails.

6.2.2 Acid Dosing

Sulfuric acid at 93-97% concentration by weight is delivered to the site in totes. The tote is connected to the acid dosing pump skid by the operator. A level sensor is installed in the tote which displays the level on the HMI. When the level in the tote reaches a set low level, the PLC triggers an alarm on the HMI. An alarm and a call out to the operator are triggered if the level drops to the LOLO level. These alarms signal the operator to exchange the tote with the spare and/or order a new tote. An alarm is also triggered on the HMI when the level in the tote decreases rapidly, indicating there may be a leak in the tote resulting in a shutdown sequence for the plant. There is also an alarm if a leak is detected in the dosing skid as indicated by an optical leak detection switch (LS-410).

The dosing pump skid transfers acid from the tote to the pH adjust tank via one of two diaphragm pumps, one pump being an installed spare. Isolation valves for pump servicing are located upstream and downstream of each pump and can be manually manipulated. The pumps can be shut off or on via a HOA switch and the speed is automatically controlled based on the pH reading in the adjust tank. The pump stroke length is manually adjustable by the operator. The acid dose to pH relationship is based on a single point control PID loop. In the event that a pump is operating

against a closed isolation valve, or other downstream blockage (automatic block valve failure, back pressure valve failure) each pump discharge is equipped with a pressure relief valve that discharges back to the storage tank. The status of the pump (on/off) is displayed on the HMI. Pressure in the pump discharge lines is measured and displayed locally.

6.2 ALARMS

The pH adjust system reference drawings and system equipment are summarized in Tables 6.1 and 6.2 respectively. Table 6.3 summarizes the alarm conditions and interlocks associated with the pH adjust system.

7.0 FILTRATION AND ADSORPTION SYSTEM

7.1 CONTROL NARRATIVE

7.1.1 Bag Filters

The level in the pH adjust tank is used to control the speed of the centrifugal pumps (PU-420A and 420B). The speed is set via a PID algorithm to be proportional to the water level which is maintained at initially 70% and manipulated to satisfy the level control. Two pumps are installed, one as an installed spare. In the event of a LO level alarm the pumps are shut off and in the event of a HI level alarm the inlet valves and well pumps are shut off. Manual isolation valves located upstream and downstream of the pumps allow for the pumps to be removed for servicing. Normally only one pump will be in operation. A pressure gauge located on the downstream end of the combined pump flow displays the pressure entering the bag filters locally. The pumps can be shut off/on HOA.

Water pumped from the pH adjust tank flows through the two bag filters installed in parallel with manual valves. The pressure differential across both filters is monitored by a pressure sensor and is displayed locally and on the HMI. When the pressure difference reaches the HI or HIHI level the PLC triggers an alarm on the HMI and a callout is sent to the operator warning the operator that the bag filters need to be changed. Pressure in the combined outlet piping is monitored via a pressure gauge and displayed locally.

7.1.2 Cartridge Filters

Water pumped from the pH adjust tank flows through the bag filters and into one of two cartridge filters installed in parallel with manual valves (one is an installed spare). A pressure gauge located on the downstream end of the bag filters displays the pressure entering the cartridge filters locally. The pressure differential across each filter is monitored by a pressure sensor and is displayed locally and on the HMI. When the pressure difference reaches the HI or HIHI level the PLC triggers an alarm on the HMI and a callout is sent to the operator warning the operator that the filter cartridges need to be changed. Pressure in the combined outlet piping is monitored via a pressure gauge and displayed locally.

7.1.3 Adsorption Columns

From the filters, the groundwater flows to the two adsorption columns in series which follow a lead/lag operation. Manual valves located upstream and downstream of each column allow for each column to be isolated for servicing or maintenance. Water samples manually collected downstream of the first adsorption column will indicate to the operator when breakthrough has occurred. The columns will also be monitored on a pressure differential basis via pressure sensors located directly upstream and downstream of each column. The differential pressure across each column will be displayed locally and on the HMI. When the pressure differential reaches a HI or HIHI level the PLC triggers an alarm on the HMI warning the operator that the adsorption media

needs to be replaced. In addition, a callout is sent to the operator at the HIHI level. Local pressure gauges are located downstream of the each column.

pH in the treated effluent is monitored (AIT-450) in the effluent pipe with the real time reading displayed both locally and on the HMI. The pH is used for compliance monitoring and reporting. The transmitter does not control any equipment, however, an alarm is signaled by the PLC when the pH reaches a LO or HI level. In addition, an alarm is signaled by the PLC, the operator is called, and the system shuts down upon a LOLO or a HIHI level.

Flow rate is measured via a magnetic flow meter (FIT-490) on the downstream end of the columns before it reaches the discharge outlet. The real time flow is displayed both locally and on the HMI. Additionally, the total flow, calculated by the PLC from the flow meter pulse output, is displayed on the HMI.

7.2 ALARMS

The filtration and adsorption system reference drawings and system equipment are summarized in Tables 7.1 and 7.2 respectively. Table 7.3 summarizes the alarm conditions and interlocks associated with the filtration and adsorption system.

8.0 SLUDGE MANAGEMENT SYSTEM

8.1 CONTROL NARRATIVE

8.1.1 Sludge Tank

Clarifier underflow is pumped to the sludge tank via a pneumatic diaphragm pump (P-220). Compressed air from the compressor (CO-910) flows through an accumulator vessel (TK-910). A pressure gauge on the vessel is displayed locally, and a pressure switch low will alarm to the PLC. Air from the accumulator vessel is divided between the first and second diaphragm pumps and the filter press. Air flow to the diaphragm pumps is controlled by solenoid valves

(EV-920 and EV-930) which are set on timers. The position of the valve is displayed on the HMI.

Sludge flow from the clarifier can be isolated manually via a pinch valve and diverted to either the sludge tank or back to the co-precipitation tank. Sludge flow from the clarifier to sludge tank and to the co-precipitation tank are controlled via the solenoid valve (EV-221) and (EV-229) respectively. Flow will normally be diverted to the co-precipitation tank to achieve a target TSS concentration into the clarifier. These valves therefore will be set to open and close by the PLC based on an operator input time interval. In the event that the clarifier is not working effectively and reprocessing is required, all flow can be diverted back to the co-precipitation tank.

In the event that the sludge in the tank is not of sufficient quality for dewatering prior to processing in the filter press, polymer can be added in the sludge tank. The operator will manually open/close the correct valves and adjust the polymer dosing pump speed as needed (see Section 5 Settling).

The sludge tank is equipped with a level sensor and level switch as a safety measure in case either device fails. The level sensor continuously measures the sludge level and displays the value both locally and on the HMI. When the level sensor detects a HI, LO or LOLO level the

PLC triggers an alarm warning the operator. A LO level indicates the tank is nearing empty and there is not enough sludge to run a batch in the filter press. A LOLO level also switches off the tank mixer to avoid running dry. A HI level indicates the tank is above operating level and a batch should be processed in the filter press. If the level continues to rise to the HIHI level, near overflow, the float switch is triggered and the PLC signals an alarm on the HMI, sends a callout to the operator and initiates the system shutdown sequence.

The sludge tank is stirred continuously by a constant speed mixer. The mixer can be shut on/off HOA and the status of the mixer (on, off) is displayed on the HMI.

8.1.2 Filter Press

The operator manually processes batches of sludge using the filter press as needed. The operator switches on the diaphragm pump and filter press on the filter press control panel (CP-840). The majority of the press functions are controlled locally at the control panel. The PLC monitors

pressure at a pressure transducer adjacent to the press inlet to ensure that high pressure setting is not exceeded by the press feed pump.

Filtrate from the press flows by gravity to the head tank. Excess filtrate is collected in the drip launder and is directed into the process sump by gravity. When the filter press cycle is complete the operator shuts off the diaphragm pump via the control panel and opens the press. The cake solids fall into a roll-off bin where they are collected until full and the bin is removed for offsite disposal. The operator will need to shut off the filter press and pump and close the valves. In the event of a malfunction, the filter press is equipped with an emergency stop which immediately shuts off power to the press. Pressure in the line between the pump and press is measured and displayed locally for the operator to observe while the press is in operation.

8.1.3 Process Sump

Flow from the treatment system containment area enter the process sump by gravity. If liquid levels in the containment area reach a HIHI level, a level float switch is activated which triggers an alarm on the HMI and sends a callout to the operator. In total there is one level switch in the containment area and one level switch in the dedicated KMnO4 and lime containment area (see Section 4). Water is pumped out of the sump to the sludge tank via a submersible pump controlled by two level float switches which signal the pump to turn on at the HI level and off at the LO level. This sump pump is only active when filter pressing operations are in progress, otherwise it is manually turned off.

8.2 ALARMS

The sludge management system reference drawings and system equipment are summarized in Tables 8.1 and 8.2 respectively. Table 8.3 summarizes the alarm conditions and interlocks associated with the sludge management system.

9.0 SAFETY

1. Flow switch FSH-990 will actuate when the safety shower and eyewash station is operated. This will actuate a local warning light and alarm horn, and call out to the operator response list. The local and remote alarms should be tested whenever the station is tested.
2. Flow alarms (local and remote) will activate and call out when the flow to the fire sprinkler system is active, and should be reported and logged at the PLC.
3. The Smoke alarm will activate and call out when any of the smoke alarm(s) are active, and should be reported and logged by the PLC.
4. HVAC system exhaust fan pushbutton emergency stop (ES-840) shall be tied into the PLC so that e-stop can be monitored remotely.
5. The manual shutdown pushbutton (ES-800) shall initiate a plant shutdown and shall call out to the operator.

Table 2.1 Groundwater Recovery System Drawing Reference

Discipline	Drawing Name	Number
P&ID	Extraction and Monitoring Wells	P&ID-05
P&ID	As Built – Piping and Instrumentation, Addendum 1	P-1
Civil	As Built - Lift Station and Trench Details, Addendum 1	C-10

Table 2.2 Groundwater Recovery System Equipment

Process Tag #	Description
PU – 510R	(01-11) Landfill well pumps
SC – 510R	(01-11) Well pumps speed control
HS – 510R	(01-11) Well pumps hand switch
PI - 510R	(01-11) Pressure indicator
FIQ – 510R	(01-11) Flow meter
PU – 520R	(12- 21) Field and wetland well pumps
HS – 520R	(12- 21) Well pumps hand switch
PI – 520R	(12- 21) Pressure Indicator
FIQ- 520R	(12- 21) Flow meter
LT – 530PZ	(1a- 8c) Piezometers
none	Lift station A submersible pump
none	Hand switch Lift Station A submersible pump
none	Low level switch Lift Station A
none	High level switch Lift Station A
none	Pressure gauge Lift Station A
none	Low low level switch Lift Station A
none	High high level switch Lift Station B
none	High high level switch West InfiltrationPond
none	Lift station B submersible pump
none	Hand switch Lift Station B submersible pump
none	Low level switch Lift Station B
none	High level switch Lift Station B
none	Pressure gauge Lift Station B
none	Low low level switch Lift Station B
none	High high level switch Lift Station B
none	High high level switch North Pond

Table 2.3 Groundwater Recovery System Alarms

Alarm	Operator Call Out Condition	Description	Set Point	Possible Causes	Interlocks
PZ-1	Yes	Cross-wall head differential at PZ-1 is approaching noncompliance. Differential head calculated by PLC from PZ-1a & b.	0.5 ft	Failure of pump control to maintain differential head or failure of well pumps	None
PZ-2	Yes	Cross-wall head differential at PZ-2 is approaching noncompliance. Differential head calculated by PLC from PZ-2a & b.	0.5 ft	Failure of pump control to maintain differential head or failure of well pumps	None
PZ-3	Yes	Cross-wall head differential at PZ-3 is approaching noncompliance. Differential head calculated by PLC from PZ-3a & b.	0.5 ft	Failure of pump control to maintain differential head or failure of well pumps	None
PZ-4	Yes	Cross-wall head differential at PZ-4 is approaching noncompliance. Differential head calculated by PLC from PZ-4a & b.	0.5 ft	Failure of pump control to maintain differential head or failure of well pumps	None
PZ-5	Yes	Cross-wall head differential at PZ-5 is approaching noncompliance. Differential head calculated by PLC from PZ-5a & b.	0.5 ft	Failure of pump control to maintain differential head or failure of well pumps	None
PZ-6	Yes	Cross-wall head differential at PZ-6 is approaching noncompliance. Differential head calculated by PLC from PZ-6a & b.	0.5 ft	Failure of pump control to maintain differential head or failure of well pumps	None
PZ-7	Yes	Cross-wall head differential at PZ-7 is approaching noncompliance. Differential head calculated by PLC from PZ-7a & b.	0.5 ft	Failure of pump control to maintain differential head or failure of well pumps	None
PZ-8	Yes	Cross-wall head differential at PZ-8 is approaching noncompliance. Differential head calculated by PLC from PZ-8a & b.	0.5 ft	Failure of pump control to maintain differential head or failure of well pumps	None
PZ-4V	Yes	Vertical head differential at PZ-4 is approaching noncompliance. Differential head calculated by PLC from PZ-4b & c.	0.1 ft	Failure of pump control to maintain differential head or failure of well pumps	None
PZ-5V	Yes	Vertical head differential at PZ-5 is approaching noncompliance. Differential head calculated by PLC from PZ-5b & c.	0.1 ft	Failure of pump control to maintain differential head or failure of well pumps	None
PZ-8V	Yes	Vertical head differential at PZ-8 is approaching noncompliance. Differential head calculated by PLC from PZ-8b & c.	0.1 ft	Failure of pump control to maintain differential head or failure of well pumps	None

Table 3.1 Chemical Oxidation System Drawing Reference

Discipline	Drawing Name	Number
P&ID	Oxidation/Precipitation	P&ID-01
P&ID	Additives	P&ID-03
Mechanical	Mechanical Layout – Floor Plan	M-01
Mechanical	Mechanical Layout – Mezzanine Plan	M-02
Mechanical	Mechanical Layout – Section B	M-04

Table 3.2 Chemical Oxidation System Equipment

Process Tag #	Description
FIT-100	Head tank discharge flow meter
LSH – 100	Head tank high level switch
TK-100	Head tank
EV - 100	Actuating Landfill A Wells isolation valve
EV -101	Actuating Landfill B Wells isolation valve
EV -102	Actuating Wetland/East Boundary Wells isolation valve
AG-110	Oxidation tank mixer
AIT-110	Oxidation tank ORP sensor
HS-110	Oxidation tank mixer hand switch
TK-110	Oxidation tank
EV-390	Actuating water shut off valve
AG-310	$KMnO_4$ storage tank mixer
HS - 310	$KMnO_4$ solution mixer hand switch
HS – 310 A &B	$KMnO_4$ dosing pumps hand switches
LIT – 310	$KMnO_4$ storage tank level sensor
LSH - 310	$KMnO_4$ storage tank high level switch
PI - 310	Pressure indicator
PU-310 A &B	$KMnO_4$ diaphragm dosing pumps
SC - 310	$KMnO_4$ dosing pumps speed control
TK-310	$KMnO_4$ storage tank

Table 3.3 Chemical Oxidation System Alarms

Alarm	Operator Call Out Condition	Description	Set Point	Possible Causes	Interlocks
LAH-100	Yes	An alarm notifies the operator that the level in the head tank is above operating level	2 in below tank overflow = 34 in	Blockage in discharge piping Failure of float switch	PLC system initiates an alarm condition. PLC system initiates a shutdown PLC system logs the alarm condition.
FAL – 100	No	An alarm notifies the operator that flow from the head tank is below operating limits	Minimum flow = 16 gpm	Blockage/failure upstream of flowmeter Failure of flowmeter	PLC system initiates an alarm condition. PLC system logs the alarm condition.
FAH – 100	No	An alarm notifies the operator that flow from the head tank is above operating limits	Maximum flow = 60 gpm	Failure of flowmeter	PLC system initiates an alarm condition. PLC system logs the alarm condition.
LALL - 310	Yes	An alarm notifies the operator that the level in the $KMnO_4$ storage tank is nearing empty	10% of Tank Depth = 13 in	Half batch of $KMnO_4$ solution has not been made Tank/piping failure Dosing pumps operating at high speed Sensor error	PLC system initiates an alarm condition. PLC system logs the alarm condition.
LAL- 310	No	An alarm notifies the operator that the level in the $KMnO_4$ storage tank indicates one half batch of $KMnO_4$ has been used	50% of Working Depth = 51 in	Half batch of $KMnO_4$ solution has been used Tank/piping failure Dosing pumps operating at high speed Sensor error	PLC system initiates an alarm condition. PLC system logs the alarm condition.
LAH- 310	No	An alarm notifies the operator that the level in the $KMnO_4$ storage tank is above operating limits	Full Batch Level = 102 in	Too much water added to batch Blockage in discharge piping Sensor error	PLC system initiates an alarm condition. PLC system sends a close valve signal to the water inlet valve (EV 390). PLC system logs the alarm condition.
LAHH- 310	Yes	An alarm notifies the operator that the level in the $KMnO_4$ storage tank is near to the overflow level	90% of Tank Depth = 113 in	Blockage in discharge piping Failure of water line valve to close Sensor error	PLC system initiates an alarm condition. PLC system sends a close valve signal to the water inlet valve (EV 390). PLC system logs the alarm condition.
AALL - 110	Yes	An alarm notifies the operator that the ORP in the oxidation tank is	Estimated 500 mV	Failure in $KMnO_4$ dosing pumps, valves or piping Ratio of flow between	PLC system initiates an alarm condition. PLC system logs the alarm condition. PLC system initiates shutdown sequence.

Table 3.3 Chemical Oxidation System Alarms

Alarm	Operator Call Out Condition	Description	Set Point	Possible Causes	Interlocks
		well below operating limits		groundwater and $KMnO_4$ solution not adjusted properly Concentration of $KMnO_4$ solution too low	
AAL – 110	Yes	An alarm notifies the operator that the ORP in the oxidation tank is below operating limits	Estimated 600 mV	Failure in $KMnO_4$ dosing pumps, valves or piping Ratio of flow between groundwater and $KMnO_4$ solution not adjusted properly Concentration of $KMnO_4$ solution too low	PLC system initiates an alarm condition. PLC system logs the alarm condition.
AAH – 110	Yes	An alarm notifies the operator that the ORP in the oxidation tank is above operating limits	Determined in field	Failure in $KMnO_4$ dosing pumps, valves or piping Ratio of flow between groundwater and $KMnO_4$ solution not adjusted properly Concentration of $KMnO_4$ solution too high	PLC system initiates an alarm condition. PLC system logs the alarm condition.
AAHH – 110	Yes	An alarm notifies the operator that the ORP in the oxidation tank is well above operating limits	Determined in field	Failure in $KMnO_4$ dosing pumps, valves or piping Ratio of flow between groundwater and $KMnO_4$ solution not adjusted properly Concentration of $KMnO_4$ solution too high	PLC system initiates an alarm condition. PLC system logs the alarm condition. PLC system initiates shutdown sequence.

Table 4.1 Co-precipitation System Drawing Reference

Discipline	Drawing Name	Number
P&ID	Oxidation/Precipitation	P&ID-01
P&ID	Additives	P&ID-03
Mechanical	Mechanical Layout – Floor Plan	M-01
Mechanical	Mechanical Layout – Mezzanine Plan	M-02
Mechanical	Mechanical Layout – Section A	M-03
Mechanical	Mechanical Layout – Section B	M-04

Table 4.2 Co-precipitation System Equipment

Process Tag #	Description
TK-120	Co-precipitation tank
AG-120	Co-precipitation tank mixer
HS - 120	Manual switch co-precipitation tank mixer
SC-120	Speed control co-precipitation tank mixer
AIT - 120	pH sensor
TK- 320	Lime storage tank
AG- 320	Lime storage tank mixer
PU-320	Lime peristaltic dosing pump
LIT -320	Lime slurry storage tank level sensor
LSH - 320	Lime slurry storage tank level switch high
HS - 320	Lime slurry tank mixer manual switch
PI - 320	Lime slurry discharge pressure indicator
HS - 321	Lime dosing pump manual switch
PU-326	Coagulant dosing pump
LS - 390	Lime and $KMnO_4$ containment level switch

Table 4.3 Co-precipitation System Alarms

Alarm	Operator Call Out Condition	Description	Set Point	Possible Causes	Interlocks
AALL - 120	Yes	An alarm notifies the operator that the pH in the co-precipitation tank is well below operating level	1.0 pH units below set point = 7.8	Valve failure/closed Failure in dosing pump Failure in pH sensor Failure in/blockage in lime piping Concentration of lime slurry too low Level of lime in storage tank low	PLC system initiates an alarm condition. PLC system logs the alarm condition. PLC system initiates shutdown sequence.
AAL - 120	No	An alarm notifies the operator that the pH in the co-precipitation tank is below operating level	0.5 pH units below set point = 8.3	Valve failure/closed Failure in dosing pump Failure in pH sensor Failure in/blockage in lime piping Concentration of lime slurry too low Level of lime in storage tank low	PLC system initiates an alarm condition. PLC system logs the alarm condition.
AAH - 120	No	An alarm notifies the operator that the pH in the co-precipitation tank is above operating level	0.5 pH units above set point = 9.3	Valve failure/closed Failure in pH sensor Concentration of lime slurry too high	PLC system initiates an alarm condition. PLC system logs the alarm condition.
AAHH - 120	Yes	An alarm notifies the operator that the pH in the co-precipitation tank is well above operating level	1.0 pH units above set point = 9.8	Valve failure/closed Failure in pH sensor Concentration of lime slurry too high	PLC system initiates an alarm condition. PLC system logs the alarm condition. PLC system initiates shutdown sequence.
LAL – 320	No	An alarm notifies the operator that the level in the lime storage tank is below operating level	10% of operating level = 12 in	All the lime slurry has been used Failure in the lime storage tank Sensor error	PLC system initiates an alarm condition. PLC system logs the alarm condition.
LAH – 320	No	An alarm notifies the operator that the level in the lime storage tank is above operating level	5% above Operating Level = 121 in	Discharge valve closed Blockage in the discharge piping Too much lime slurry added to tank Sensor error	PLC system initiates an alarm condition. PLC system logs the alarm condition.

Table 4.3 Co-precipitation System Alarms

Alarm	Operator Call Out Condition	Description	Set Point	Possible Causes	Interlocks
LAHH – 320	Yes	An alarm notifies the operator that the level in the lime storage tank is near overflow	95%of Tank Depth = 129 in	Discharge valve closed Blockage in the discharge piping Too much lime slurry added to tank Sensor error	PLC system initiates an alarm condition. PLC system logs the alarm condition.
LAH - 321	Yes	An alarm notifies the operator of a high liquid level in the pump casing	On/off	Break in peristaltic pump hose	PLC system initiates an alarm condition. PLC system logs the alarm condition. PLC system removes run signal from peristaltic pump. PLC system initiates shutdown sequence.
LAHH – 390	Yes	An alarm notifies the operator that the level in the lime/KMnO4 containment area is near overflow	2 in	Leakage/overflow of tanks Leakage in piping Sensor error	PLC system initiates an alarm condition. PLC system logs the alarm condition. PLC system initiates the shutdown sequence. PLC shuts off the lime pump (PU-320).

Table 5.1 Settling System Drawing Reference

Discipline	Drawing Name	Number
P&ID	Oxidation/Precipitation	P&ID-01
P&ID	Additives	P&ID-03
Mechanical	Mechanical Layout – Floor Plan	M-01
Mechanical	Mechanical Layout – Mezzanine Plan	M-02
Mechanical	Mechanical Layout – Section B	M-04

Table 5.2 Settling System Equipment

Process Tag #	Description
TH - 130	Lamella parallel plate clarifier
AG-130	Clarifier flash mixer
HS - 130	Flash mixer manual switch
AG - 131	Clarifier flocculation mixer
HS - 131	Flocculator mixer manual switch
SKID -330	Polymer make-down skid
TK - 330	Polymer storage tank
AG- 330	Polymer tank mixer
PU - 330 A	Polymer dosing pump #1
PU – 330 B	Polymer dosing pump #2
LIT - 330	Polymer dosing tank level sensor
LSH - 330	Polymer dosing tank float switch
PT - 330	Polymer dosing tank pressure transmitter
SC - 330	Polymer mixer speed control
HS - 330	Polymer mixer manual switch
HS – 330A	Polymer dosing pump #1 manual switch
SC – 330A	Polymer dosing pump #1 speed control
HS – 330B	Polymer dosing pump #2 manual switch
SC – 330B	Polymer dosing pump #2 speed control
PI – 330A	Pressure indicator discharge pump #1
PI – 330B	Pressure indicator discharge pump #2

Table 5.3 Settling System Alarms

Alarm	Operator Call Out Condition	Description	Set Point	Possible Causes	Interlocks
LALL - 330	Yes	An alarm notifies the operator that the level in the polymer storage tank is well below operating level	10% of Tank Depth = 4 in.	Failure in make-down skid Leak in storage tank or piping Level sensor error	PLC system initiates an alarm condition. PLC system logs the alarm condition. PLC removes run signal from mixer.
LAL – 330	No	An alarm notifies the operator that the level in the polymer storage tank is below operating level	10% Below Batch Level = 12 in	Failure in make-down skid Leak in storage tank or piping Level sensor error	PLC system initiates an alarm condition. PLC system logs the alarm condition.
LAH – 330	No	An alarm notifies the operator that the level in the polymer storage tank is above operating level	80% of Tank Depth = 33 in	Failure in make-down skid Water cleaning valve open Blockage/failure in discharge piping Level sensor error	PLC system initiates an alarm condition. PLC system logs the alarm condition.
LAHH – 330	Yes	An alarm notifies the operator that the level in the polymer storage tank is nearing overflow	90% of Tank Depth = 35 in	Failure in make-down skid Water cleaning valve open Blockage/failure in discharge piping Level sensor error	PLC system initiates an alarm condition. PLC system logs the alarm condition.

Table 6.1 pH Adjust System Drawing Reference

Discipline	Drawing Name	Number
P&ID	Effluent Polishing	P&ID-04
Mechanical	Mechanical Layout – Floor Plan	M-01
Mechanical	Mechanical Layout – Mezzanine Plan	M-02
Mechanical	Mechanical Layout – Section B	M-04

Table 6.2 pH Adjust System Equipment

Process Tag #	Description
TK- 410	Acid dosing tote
PU- 410 A	Acid diaphragm dosing pump #1
PU- 410 B	Acid diaphragm dosing pump #2
SC - 410	Acid dosing pumps speed control
HS – 410A	Acid dosing pump #1 manual switch
HS – 410B	Acid dosing pump #2 manual switch
LS-410	Acid dosing skid leak detection switch
LIT - 410	Acid dosing tote level sensor
LIT – 411	Spare tote level sensor
TK- 420	pH adjust tank
AG- 420	pH adjust tank mixer
AIT- 420	pH adjust tank pH sensor
LIT - 420	pH adjust tank level sensor
LSH - 420	pH adjust tank level switch
HS - 420	pH adjust tank mixer manual switch

Table 6.3 pH Adjust System Alarms

Alarm	Operator Call Out Condition	Description	Set Point	Possible Causes	Interlocks
LAH – 410	Yes	An alarm notifies the operator that there is a leak in the dosing skid	On	Leak in the acid tote/discharge piping contained in dosing skid Level switch error	PLC system initiates an alarm condition. PLC system logs the alarm
LALL – 410	Yes	An alarm notifies the operator that the level in the acid tote is nearing empty	10% of Tote Depth = 5 in	Leak in the acid tote/discharge piping Acid tote needs to be replaced Level sensor error	PLC system initiates an alarm condition. PLC system logs the alarm condition.
LAL – 410	No	An alarm notifies the operator that the level in the acid tote is low	20% of Tote Depth = 9 in	Leak in the acid tote/discharge piping Acid tote needs to be replaced Level sensor error	PLC system initiates an alarm condition. PLC system logs the alarm condition
LDAH (rate of fall) - 410	Yes	An alarm notifies the operator that the level in the acid tote is decreasing rapidly	Decreasing more than 3 times the max = >1 in/hr	Leak in acid tote Level sensor error	PLC system initiates an alarm condition. PLC system logs the alarm condition PLC system initiates a system shutdown sequence.
LAH – 410	No	An alarm notifies the operator that the level in the acid tote is above operating level	90% of Tote Depth = 41 in	Level sensor error	PLC system initiates an alarm condition. PLC system logs the alarm condition
LALL – 411	Yes	An alarm notifies the operator that the level in the acid tote is nearing empty	10% of Tote Depth = 5 in	Leak in the acid tote/discharge piping Acid tote needs to be replaced Level sensor error	PLC system initiates an alarm condition. PLC system logs the alarm condition.
LAL – 411	No	An alarm notifies the operator that the level in the acid tote is low	20% of Tote Depth = 9 in	Leak in the acid tote/discharge piping Acid tote needs to be replaced Level sensor error	PLC system initiates an alarm condition. PLC system logs the alarm condition
LDAH (rate of fall) – 411	Yes	An alarm notifies the operator that the level in the spare acid tote is decreasing rapidly	Decreasing more than 3 times the max = >1 in/hr	Leak in acid tote Level sensor error	PLC system initiates an alarm condition. PLC system logs the alarm condition PLC system initiates a system shutdown sequence.
LAH – 411	No	An alarm notifies the operator that the level in the acid tote is above operating level	90% of Tote Depth = 41 in	Level sensor error	PLC system initiates an alarm condition. PLC system logs the alarm condition
AAL - 420	No	An alarm notifies the operator that the pH in the pH adjust tank is below operating level	0.05 pH units below set point = 6.55	Acid dosing failure Low water flow pH sensor error Inconsistent mixing	PLC system initiates an alarm condition. PLC system logs the alarm condition

Alarm	Operator Call Out Condition	Description	Set Point	Possible Causes	Interlocks
AALL - 420	Yes	An alarm notifies the operator that the pH in the pH adjust tank is below operating level	0.1 pH units below set point = 6.5	Acid dosing failure Low water flow pH sensor error Inconsistent mixing	PLC system initiates an alarm condition. PLC system initiates a system shutdown sequence. PLC system logs the alarm condition
AAH - 420	No	An alarm notifies the operator that the pH in the pH adjust tank is above operating level	0.05 pH units above set point = 6.65	Acid dosing pump failure High water flow pH sensor error Inconsistent mixing	PLC system initiates an alarm condition. PLC system logs the alarm condition
AAHH - 420	Yes	An alarm notifies the operator that the pH in the pH adjust tank is above operating level	0.1 pH units above set point = 6.7	Acid dosing pump failure High water flow pH sensor error Inconsistent mixing	PLC system initiates an alarm condition. PLC system initiates a system shutdown sequence. PLC system logs the alarm condition

Table 6.3 pH Adjust System Alarms

Alarm	Operator Call Out Condition	Description	Set Point	Possible Causes	Interlocks
LALL - 420	Yes	An alarm notifies the operator that the level in the pH adjust tank is well below operating level	10% of Working Depth = 7 in	Leak in the pH adjust tank/discharge piping Discharge pump speed too high Level sensor error	PLC system initiates an alarm condition. PLC system removes run signal from mixer. PLC system logs the alarm condition
LAL – 420	No	An alarm notifies the operator that the level in the pH adjust tank is below operating level	20% of Working Depth = 14 in	Leak in the pH adjust tank/discharge piping Discharge pump speed too high Level sensor error	PLC system initiates an alarm condition. PLC system withdraws the run signal to the filter pumps. PLC system logs the alarm condition
LAH – 420	No	An alarm notifies the operator that the level in the pH adjust tank is above operating level	10% above Working Depth = 75 in	Discharge pump speed too low Blockage/closed valve in discharge pipe Level sensor error	PLC system initiates an alarm condition. PLC system logs the alarm condition
LAHH – 420	Yes	An alarm notifies the operator that the level in the pH adjust tank is nearing overflow	95% of Tank Depth = 77 in	Discharge pump speed too low Blockage/closed valve in discharge pipe Level switch error	PLC system initiates an alarm condition. PLC system initiates the shutdown sequence. PLC system logs the alarm condition

Table 7.1 Filtration and Adsorption System Drawing Reference

Discipline	Drawing Name	Number
P&ID	Effluent Polishing	P&ID-04
Mechanical	Mechanical Layout – Floor Plan	M-01
Mechanical	Mechanical Layout – Mezzanine Plan	M-02
Mechanical	Mechanical Layout – Section A	M-03
Mechanical	Mechanical Layout – Section B	M-04

Table 7.2 Filtration and Adsorption Adjust System Equipment

Process Tag #	Description
PU – 420 A	Centrifugal pump #1 to filter/adsorption columns
PU – 420 B	Centrifugal pump #2 to filter/adsorption columns
HS - 420A	Centrifugal pump #1 manual switch
HS – 420B	Centrifugal pump #2 manual switch
FIL - 425 A	Filter bag #1
FIL - 425 B	Filter bag #2
DPIT – 425	Differential pressure sensor bag filters
FIL - 430 A	Filter cartridge #1
FIL - 430 B	Filter cartridge #2
DPIT – 430A	Differential pressure sensor filter #1
DPIT – 430B	Differential pressure sensor filter #2
ADS - 440 A	Arsenic adsorption column #1
ADS - 440 B	Arsenic adsorption column #2
PI - 420	Cartridge filter feed pressure indicator
PI - 430	Filter discharge pressure indicator
DPIT – 440A	Differential pressure sensor adsorption column #1
DPIT – 440B	Differential pressure sensor adsorption column #2
PI - 441	Adsorption column #1 discharge pressure indicator
PI - 442	Adsorption column #2 discharge pressure indicator
AIT - 450	Final Effluent pH meter
FIT - 490	Adsorption columns discharge flow meter

Table 7.3 Filtration and Adsorption System Alarms

Alarm	Operator Call Out Condition	Description	Set Point	Possible Causes	Interlocks
DPAH – 425	No	An alarm notifies the operator that the pressure differential in the bag filters is above operating level	Estimated to be greater than 10 psi	Bag filters needs to be cleaned Pressure sensor error Blockage in piping/ valve closed	PLC system initiates an alarm condition. PLC system logs the alarm condition
DPAHH – 425	Yes	An alarm notifies the operator that the pressure differential in the bag filters is well above operating level	Estimated to be greater than 20 psi	Bag filter needs to be changed out Pressure sensor error Blockage in piping/ valve closed	PLC system initiates an alarm condition. PLC system logs the alarm condition
DPAH – 430A	No	An alarm notifies the operator that the pressure differential in the cartridge filter is above operating level	Estimated to be greater than 10 psi	Cartridge filter needs to be cleaned Pressure sensor error Blockage in piping/ valve closed	PLC system initiates an alarm condition. PLC system logs the alarm condition
DPAHH – 430A	Yes	An alarm notifies the operator that the pressure differential in the cartridge filter is well above operating level	Estimated to be greater than 20 psi	Cartridge filter needs to be cleaned Pressure sensor error Blockage in piping/ valve closed	PLC system initiates an alarm condition. PLC system logs the alarm condition
DPAH – 430B	No	An alarm notifies the operator that the pressure differential in the cartridge filter is above operating level	Estimated to be greater than 10 psi	Cartridge filter needs to be cleaned Pressure sensor error Blockage in piping/ valve closed	PLC system initiates an alarm condition. PLC system logs the alarm condition
DPAHH – 430B	Yes	An alarm notifies the operator that the pressure differential in the cartridge filter is well above operating level	Estimated to be greater than 20 psi	Cartridge filter needs to be cleaned Pressure sensor error Blockage in piping/ valve closed	PLC system initiates an alarm condition. PLC system logs the alarm condition
DPAH – 440A	No	An alarm notifies the operator that the pressure differential in the adsorption column is above operating level	Estimated to be greater than 5 psi	Adsorption media needs to be replaced Pressure sensor error Blockage in piping/ valve closed	PLC system initiates an alarm condition. PLC system logs the alarm condition
DPAHH – 440A	Yes	An alarm notifies the operator that the pressure differential in the adsorption column is well above operating level	Estimated to be greater than 7 psi	Adsorption media needs to be replaced Pressure sensor error Blockage in piping/ valve closed	PLC system initiates an alarm condition. PLC system logs the alarm condition

Alarm	Operator Call Out Condition	Description	Set Point	Possible Causes	Interlocks
DPAH – 440B	No	An alarm notifies the operator that the pressure differential in the adsorption column is above operating level	Estimated to be greater than 5 psi	Adsorption media needs to be replaced Pressure sensor error Blockage in piping/ valve closed	PLC system initiates an alarm condition. PLC system logs the alarm condition
DPAHH – 440B	Yes	An alarm notifies the operator that the pressure	Estimated to be greater than 7	Adsorption media needs to be replaced	PLC system initiates an alarm condition.

Table 7.3 Filtration and Adsorption System Alarms

Alarm	Operator Call Out Condition	Description	Set Point	Possible Causes	Interlocks
		differential in the adsorption column is well above operating level		Pressure sensor error Blockage in piping/ valve closed	PLC system logs the alarm condition
AALL-450	Yes	An alarm notifies the operator that effluent pH is below the compliance limit.	<6.1	Acid overdose pH sensor error	PLC system initiates an alarm condition. PLC system initiates shutdown sequence PLC system logs the alarm condition
AAL-450	No	An alarm notifies the operator that effluent pH is approaching the compliance limit.	<6.2	Acid overdose pH sensor error	PLC system initiates an alarm condition. PLC system logs the alarm condition
AAH-450	No	An alarm notifies the operator that effluent pH is approaching the compliance limit.	>7.0	Acid underdose Lime overdose pH sensor error	PLC system initiates an alarm condition. PLC system logs the alarm condition
AAHH-450	Yes	An alarm notifies the operator that effluent pH is above the compliance limit.	>7.9	Acid underdose Lime overdose pH sensor error	PLC system initiates an alarm condition. PLC system initiates shutdown sequence PLC system logs the alarm condition
FSL – 490	No	An alarm notifies the operator that the flow is below operating level	43% of average flow = 17 gpm	Blockage/failure upstream Flow sensor error	PLC system initiates an alarm condition. PLC system logs the alarm condition
FSLL – 490	Yes	An alarm notifies the operator that the flow is well below operating level	Min flow = 15 gpm	Blockage/failure upstream Flow sensor error	PLC system initiates an alarm condition. PLC system logs the alarm condition
FSH – 490	No	An alarm notifies the operator that the flow is above operating level	95% of max flow = 57 gpm	Level/flow control failure upstream Flow sensor error	PLC system initiates an alarm condition. PLC system logs the alarm condition
FSHH - 490	Yes	An alarm notifies the operator that the flow is well	Max flow = 60 gpm	Failure upstream Level/flow control failure upstream	PLC system initiates an alarm condition.
		above operating level		w sensor error	PLC system initiates shutdown sequence PLC system logs the alarm condition

Table 8.1 Sludge Management System Drawing Reference

Discipline	Drawing Name	Number
P&ID	Sludge Handling	P&ID-02
Mechanical	Mechanical Layout – Floor Plan	M-01
Mechanical	Mechanical Layout – Mezzanine Plan	M-02
Mechanical	Mechanical Layout – Section A	M-03
Mechanical	Mechanical Layout – Section B	M-04

Table 8.2 Sludge Management System Equipment

Process Tag #	Description
TK - 220	Sludge tank
AG - 220	Sludge tank mixer
LIT - 220	Sludge tank level sensor
HS - 220	Sludge tank mixer manual switch
LSH - 220	Sludge tank level switch
P - 220	Air diaphragm pump #1 (clarifier to sludge tank)
EV- 221	Solenoid valve (clarifier to sludge tank)
EV- 229	Solenoid valve (clarifier to co-precipitation tank)
P- 230	Air diaphragm pump #2 (sludge tank to filter press)
PI - 235	Filter press pressure indicator
PIT-235	Filter press pressure transmitter
FP - 240	Filter press
TK - 250	Process sump
none	Process sump pump
LSL - 250	Process sump level switch low
LSH - 250	Process sump level switch high
LS - 290	Containment level switch
CP- 840	Filter Press Control Panel
ES - 840	Filter press emergency stop
CO - 910	Air compressor
TK - 910	Compressed air accumulator vessel
PI/PSL - 910	Accumulator vessel pressure indicator and pressure switch
EV- 920	Compressed air control valve – air diaphragm pump #1
EV- 930	Compressed air control valve – air diaphragm pump #2

Table 8.3 Sludge Management System Alarms

Alarm	Operator Call Out Condition	Description	Set Point	Possible Causes	Interlocks
LALL - 220	Yes	An alarm notifies the operator that the level in the sludge storage tank is well below operating level	10% of Tank Depth = 19 in	Leak/failure in tank or piping Filter press and pump on but not enough sludge for batch Sensor error	PLC system initiates an alarm condition. PLC system logs the alarm condition PLC system removes run signal from mixer.
LAL – 220	No	An alarm notifies the operator that the level in the sludge storage tank is below operating level	20% of Tank Depth = 37 in	Leak/failure in tank or piping Filter press and pump on but not enough sludge for batch Sensor error	PLC system initiates an alarm condition. PLC system logs the alarm condition
LAH – 220	No	An alarm notifies the operator that the level in the sludge storage tank is above operating level	80% of Tank Depth = 148 in	Sludge batch in filter press needs to be run Sensor error	PLC system initiates an alarm condition. PLC system logs the alarm condition
LAHH – 220	Yes	An alarm notifies the operator that the level in the sludge storage tank is nearing overflow	90% of Tank Depth = 167 in	Sludge batch in filter press needs to be run Sensor error	PLC system initiates an alarm condition. PLC system initiates the shutdown sequence PLC system logs the alarm condition
PAH – 225	Yes	An alarm notifies the operator that the pressure level in the feed to the filter press is too high	110 psi	Feeding press at too high of a pump speed Sensor error	PLC system initiates an alarm condition. PLC system initiates shutdown of sludge feed pump PLC system logs the alarm condition
LAHH - 290	Yes	An alarm notifies the operator that the level in the containment area is nearing overflow	2 in	Spill, leak or tank overflow Process sump overflow Sensor error	PLC system initiates an alarm condition. PLC system logs the alarm condition PLC system initiates the shutdown sequence
PAL - 910	No	An alarm notifies the operator that the pressure in the air accumulator vessel is low	75 psi (adjustable)	Air leak in vessel or piping Compressor failure High air demand in system	PLC system initiates an alarm condition. PLC system logs the alarm condition

Appendix C

Stormwater Pollution Prevention Plan

B&L Woodwaste Site
Pierce County, Washington

Stormwater Pollution Prevention Plan (SWPPP)

Groundwater Recovery and Treatment System

Prepared for
B&L Woodwaste Custodial Trust
606 Columbia Street NW, Suite 212
Olympia, Washington 98501

Prepared by
AMEC Environment & Infrastructure
600 University St, Suite 600
Seattle, Washington 98101

F L O Y D | S N I D E R
601 Union Street, Suite 600
Seattle, Washington 98101

November 2013

Table of Contents

Figures

1.0 Introduction

This Stormwater Pollution Prevention Plan (SWPPP) has been prepared to support operations and maintenance activities being conducted as part of cleanup activities being conducted for the B&L Woodwaste Site (Site) in Pierce County, Washington. This SWPPP addresses management of stormwater runoff from the facilities and activities associated with routine operation and maintenance of the cleanup remedy components that are present at the Site. Remedy components include the following:

- Landfill cap that limits infiltration of rain water to the wastes present beneath the cap.
- Subsurface barrier wall encircling contaminated groundwater beneath the Landfill cap.
- Interceptor trench located along the eastern and southern portions of the barrier wall.
- Groundwater recovery well network beneath the Landfill.
- Outside Area groundwater recovery well network.
- Monitoring well and piezometer network.
- Groundwater treatment plant and building.
- Security fencing.

The locations for these remedy components are shown on Figure 1.

This SWPPP addresses stormwater best management practices associated with routine monitoring, operation, and maintenance activities for the above remedy components. This plan does not address spills of chemicals, materials, or groundwater from the GWTP; spills associated with the GWTP are addressed in the Spill Control Plan included with the O&M Manual (Appendix A of the OMMP).

This SWPPP is divided into the following seven main sections:

- **Section 1 – Introduction.** This section describes the objectives and organization of this SWPPP.
- **Section 2 – Project Background and Work Area Description.** This section describes project background, existing conditions in the work area, and construction activities.
- **Section 3 – Lime Delivery Pad BMPs.** This section provides a detailed description of the BMPs to be implemented to control releases that may occur during delivery of lime slurry to the GWTP building.
- **Section 4 – Well Maintenance BMPs.** This section describes the BMPs for performing routine maintenance on the monitoring well and recovery well networks.
- **Section 5 – Pollution Prevention Team.** This section identifies the appropriate contact names (emergency and non-emergency), monitoring personnel, and the on-site temporary erosion and sedimentation control inspector.

- **Section 6 – Reporting and Recordkeeping.** This section describes the requirements for documentation of BMP implementation and changes, if any, that are made to the BMPs described in this SWPPP.

Supporting documentation and forms are provided in the Attachments.

2.0 Project Background and Work Area Description

2.1 PROJECT BACKGROUND

The Site is located in unincorporated Pierce County, Washington, in Township 20 North, Range 4 East, Section 5, Willamette Meridian. The Site consists of the B&L Property (Property), which includes the B&L Woodwaste Landfill (Landfill), and adjacent areas that have been affected by releases from the Landfill. The Property occupies about 18.5 acres of undeveloped land approximately 0.25 mile east of Interstate 5 and 5 miles east of Tacoma. Within the Property, the pentagonal-shaped Landfill encompasses roughly 11.5 acres and rises to an elevation of approximately 53 feet (NAVD88). Farmland borders the western and southwestern edges of the Property, the Autumn Village Apartment complex adjoins the southeastern border, and Fife Way defines the eastern boundary. A private property is located to the northeast. Puget Power Access Road, which was converted to a bicycle trail and is now known as the Interurban Trail, borders the north side of the property. Former farmland that has re-established itself as a grassy wetland lies to the north of the Interurban Trail.

Beginning in the 1970s, the Property was operated as a disposal site for deck debris from log sort yards operating in the Tacoma Tideflats area. Log sort yard operators used Asarco slag as roadway and yard ballast. The slag was mixed with the bark and dirt that was periodically cleaned from the log sort yards and transported to the Property for disposal. During the 1980s, Ecology discovered that the slag within the waste was leaching arsenic at concentrations in exceedance of surface water standards. The waste was identified as a source of metal contamination to Hylebos Waterway and the Commencement Nearshore/Tideflats CERCLA site by the U.S. Environmental Protection Agency. Remediation and monitoring activities at the Site began in the late 1980s and have continued through the present day. In response to an order from Ecology, the waste was consolidated and a landfill cap was placed over the consolidated waste in 1992 to limit generation of leachate due to infiltration of stormwater. A phased construction program was conducted from 2008 through 2012 to implement the additional cleanup actions specified in the 2008 CAP; this work included:

- Construction of a subsurface barrier wall to enclose contaminated groundwater beneath the Landfill (2009-2010);
- Construction of an interceptor trench to facilitate groundwater flow around the barrier wall (2009);
- Implementation of in situ treatment for downgradient groundwater (2009 – 2011);
- Construction of a contaminated groundwater recovery and treatment system (2011 – 2012); and
- Excavation and disposal of contaminated ditch sediments (2012).

Remediation activities at the Site include operation and maintenance of the interceptor trench, groundwater recovery system, groundwater treatment plant, and the in situ treatment program. Groundwater monitoring and monitoring well maintenance is also conducted in a network of monitoring wells distributed over the Site.

2.2 EXISTING CONDITIONS

The Site includes the B&L Property (which included the Landfill) and several adjacent properties that have been affected by the groundwater plume or affected sediment. The ground surface on the Property is mostly vegetated with grass. A curbed concrete pad extends approximately 12 ft. from the groundwater treatment plant building. The adjacent properties are primarily wetland areas and agricultural fields. Driving and parking areas on the Property are surfaced with gravel. Farming structures and an apartment complex exist on an adjacent property. The Property topography is characterized by a mound in the middle (i.e., the Landfill), a perimeter access road around the Landfill at a lower elevation, and decreasing elevations around the perimeter. The Landfill cap slopes towards the access road from the topographical high in the middle. The access road is higher than the perimeter ground surface by approximately 4 to 5 feet. An earthen pad is present beneath the groundwater treatment building; the pad elevation is approximately the same as the perimeter road around the Landfill. Agricultural ditches that collect surface runoff from agricultural farmlands are located along the southern, western, and northern boundaries of the Property. The agricultural ditches join with flow from the Surprise Lake Drain and ultimately discharge to Hylebos Creek.

The Landfill is covered by an engineered, multi-layer cap comprised of surface grass, an impermeable liner, and drainage layers; the cap limits rainfall infiltration into the Landfill wastes. Stormwater runoff and drainage from the Landfill cap drains to the perimeter stormwater collection ditch around the Landfill. The ditch conveys the runoff from south to north and discharges to the stormwater detention pond immediately north of the Landfill through three culverts. An overflow pipe in the detention pond discharges into the agricultural ditch along the northern boundary of the Property. The detention pond also receives the treated water discharged by the groundwater treatment plant. Stormwater runoff from the perimeter road either drains inward to the stormwater ditch or drains outward to the agricultural ditches. Stormwater runoff from topographically low area on the east side of the Landfill drains via a culvert to the agricultural ditch.

An organic silt and peat unit lies beneath the Landfill and forms the near-surface soils beneath much of the area surrounding the Landfill. These deposits are 4- to 7-feet thick and correspond to the pre-landfill ground surface. A thin layer of fill material from the 1993 remedy covers much of the Property ground surface surrounding the Landfill. Saturated alluvial deposits (primarily sands) directly underlie the organic silt and peat unit and comprise the Upper Sand Aquifer. The soils beneath the area upgradient of the Landfill consist of a silty, gravelly colluvium deposit with generally low permeability.

Several distinct wetlands areas, are located near or within the project area, located both on and off the Landfill Property, as shown on Figure 1. All of the wetlands are ultimately connected to Hylebos Creek through a series of smaller surface drainages and the Surprise Lake Drain. Wetland A covers approximately 0.2 acres on the southeast side of Property. As described by the Ecology rating system, Wetland A is a Category IV wetland. Wetland B is a Category III wetland, and occupies approximately 0.7 acres on the northeast portion of the Property. Wetland C covers at least 59 acres north of the Interurban Trail and is classified as a Category I wetland. Wetland F, approximately 1 acre in size, is a Category IV wetland located in the agricultural field, adjacent the northwest corner of the Property (AMEC 2011). Wetland E is located on the property to the northeast of the Landfill Property; this wetland area is not affected by stormwater runoff from the project area.

2.3 OPERATION AND MAINTENANCE ACTIVITIES

This SWPPP addresses routine operation and maintenance activities conducted to ensure the active remedy components attain cleanup objectives specified in the 2008 CAP and to comply with post-closure care requirements specified in applicable regulations for the Landfill. These routine activities will include operation and maintenance of the groundwater recovery wells, operation and maintenance of the groundwater treatment process located inside the building, monitoring and maintenance injections for in situ treatment of the groundwater plume, monitoring of groundwater and surface water, and Landfill cap inspection and surface maintenance. These routine activities will not require disturbance of surface soils. Non-routine operation and maintenance activities are not specifically addressed by this SWPPP. Work plans will be prepared for non-routine work that may disturb surface soils or otherwise potentially affect stormwater runoff from the Site. The project-specific work plans will include BMPs or, if earth disturbance is sufficiently large, a construction stormwater permit to properly manage stormwater runoff from the non-routine work.

Operation and maintenance activities associated with the GWTP will mostly be conducted inside the building housing the process equipment. Figure 2 shows the GWTP building and adjacent areas. The building significantly reduces the potential for process operations to affect stormwater runoff. The treatment system includes secondary containment and fail-safe protections that should prevent releases of chemical or untreated water from the building area. Wastes generated by the process and stored inside the building. Chemicals used in the process are stored inside the building. Standard operating procedures for the treatment process include housekeeping requirements to keep walkways clean and limit the potential for tracking process materials outside the building. Chemicals other than lime used in the treatment process are delivered in containers and transferred from delivery trucks directly to the building. Lime is delivered as a slurry in bulk tank trucks at a delivery pad designed to limit the potential for any leakage to be released to the environment; specific BMPs have been established to address stormwater management from the lime delivery area, as described below.

The groundwater recovery system includes a network of recovery wells and 19 piezometers used to monitor groundwater level around the perimeter of the Landfill (Figure 1). The groundwater recovery wells are distributed over the Landfill and the areas northwest, north, and east of the Landfill. During normal operation, the 19 submerged well pumps discharge to a sealed, underground line that directs recovered groundwater to the inside of the GWTP building. Routine maintenance may require removal of pumps from recovery wells, opening or replacement of equipment at the well heads, or removal of transducers within piezometers. BMPs have been established to address stormwater management during routine maintenance work.

A network of monitoring wells is used to collect groundwater samples to demonstrate compliance with the cleanup standard specified in the 2008 CAP. The Compliance Monitoring Plan (CMP) and the Sampling and Analysis Plan (SAP), both of which are appended to the OMMP, describe procedures used to collect samples and to prevent release of groundwater to surface soils. These procedures effectively limit the potential for groundwater sampling to impact stormwater runoff. Routine maintenance of monitoring wells is limited to replacement of well caps and maintaining well identification information on the wells. These maintenance activities have minimal potential for affecting stormwater runoff. No additional BMPs are needed to manage stormwater runoff from the area adjacent to groundwater monitoring wells during routine sampling and maintenance. Project-specific work plans that will include BMPs for

stormwater management will be prepared if more invasive maintenance (e.g., replacing the well monument) is needed.

This page intentionally left blank.

3.0 Lime Delivery Pad BMPs

Deliveries of lime slurry are made only at the Lime Delivery Pad. The location and design of the Lime Delivery Pad are shown on Figures 2 and 3. The Pad provides an impervious surface that will contain spills, if any during delivery of lime slurry. A specially designed enclosure around the delivery connection piping will collect and contain drippage that may occur during hose connection and/or disconnection. The enclosure will prevent these incidental drips from contacting the concrete pad. This Pad includes BMPs that support stormwater management and will limit the potential for releases of lime slurry to the environment during delivery of lime slurry. The design and BMPs are described in more detail below.

3.1. LIME DELIVERY PAD DESIGN

The Lime Delivery Pad is located on the north side of the building (Figure 2). The Pad is a concrete slab (12 ft X 35 ft) oriented NW to SE and completely surrounded by concrete curbing extending up to 1 ft above the slab. A concrete sump (9.5 ft X 4 ft X 4 ft) covered by a steel grate is located at the southeastern end of the slab. The slab is sloped at 3% from a high at the NW end to a low at the SE end so that any liquids on the slab will drain toward the sump. The sump is equipped with an outlet gate valve that is manually operated. An extension to the valve handle allows the drain valve to be opened and closed from grade level. The curbed area and sump provide a total containment capacity of approximately 2,350 gallons; the maximum volume of lime slurry that will be delivered is 2,500 gallons. It is highly unlikely that the entire contents of the lime slurry truck would be released to the containment area, as the truck operator will be present at the truck during delivery and the truck will be actively pumping lime slurry to the storage tank inside the building during delivery. The Lime Delivery Pad is capable of containing up to a 10 inch rain event. The Lime Delivery Pad is accessed directly from the gravel parking area around the GWTP building.

An Environ-Box™ is installed on the wall of the building at the Lime Delivery Pad to provide a safe and environmentally sound means to connect the truck to the lime slurry storage tank during delivery. The Environ-Box™ is specially designed to provide containment for any leakage that may occur when connecting or disconnecting the delivery hose to the lime slurry delivery line. The box will contain nominal amounts of drippage or leakage during connections and disconnections, preventing contact of the leaks with the concrete pad. A side connection to the lime delivery line allows the delivery line to be flushed with water from a water hose. A drain valve for the box allows any leaked lime slurry to be removed from the Environ-Box™ and collected into a bucket. The Environ-Box™ is kept closed and locked when it is not being used for delivery or being cleaned.

3.2 LIME DELIVERY PROCEDURES

The lime delivery procedures are documented in the O&M Manual, Operation Procedure P-320, Lime Feed System Operations. These procedures are summarized below. These operating procedures are followed for routine activities associated with the GWTP. Lime is delivered to the GWTP only when ordered. An order is placed for the lime only when there is sufficient capacity in the lime slurry storage tank to accept a load.

Delivery of lime slurry requires that the GWTP Operator be present at the facility. Prior to allowing the delivery truck to drive onto the Lime Delivery Pad, the truck and trailer are

inspected for oil and/or chemical leaks. If leaks are noted the truck is not allowed to unload and the trucking company is contacted to initiate cleanup of the parking area and entry driveway.

After the truck is approved for delivery, the Operator directs the truck driver to park the truck on the Lime Delivery Pad to commence transfer of lime slurry from the tank truck to the storage tank located inside the building. Prior to connecting the lime slurry delivery lines to the truck or to the GWTP lines, the Operator manually closes the gate valve in the spill containment sump located in the Lime Delivery Pad. When closed, this valve, prevents the contents of the sump from release to the environment. Upon authorization from the Operator, The truck driver connects the lime slurry delivery hose to the truck outlet connection and the Environ-Box™ camlock fitting. After double checking the connections, the truck driver opens the delivery gate valve in the Environ-Box™, which allows the lime slurry to flow to the storage tank inside the building. The driver then pumps lime slurry from the truck through the lime delivery piping and into the lime storage tank. When the lime has been delivered, the truck driver then rinses his truck using the water hose located nearby. He then pumps that rinsate water into the lime tank; this also rinses the lime delivery piping. After completing rinsing, the truck driver then closes the delivery gate valve in the Environ-Box™, disconnects the hoses, inspects the pad for spills, and leaves the site is there are no lime spills. After the lime delivery truck leaves the site the operator flushes the lime delivery piping with clean water using the ¾" ball valve present in the Environ-Box™. The delivery pad, sump, and Environ-Box™ are then checked visually to confirm that no lime has spilled. If no spills are noted, the containment sump gate valve is opened again, allowing for uncontaminated stormwater from the concrete pad to flow to the environment. If spillage has occurred, the Lime Delivery Pad, sump, and/or Environ-Box™ are cleaned, as described in the Procedure P-320 and as summarized below.

3.3 LIME DELIVERY PAD CLEANUP PROCEDURES

The cleanup procedures for the Lime Delivery Pad, are delineated in Procedure 320, Lime Feed System. The cleanup procedures are summarized here.

If lime is spilled onto the Lime Delivery Pad, the truck is not allowed to drive from the pad until cleanup of the pad has been completed. Initially, the size of the spill is assessed by the Operator. If it is small, the spill can be cleaned up using the onsite wet vacuum, a steel brush, and rinsing the concrete surface using a clean water spray from a hose. Rinse water from cleanup will collect within the sump. Cleaning will continue until the area shows no visible evidence of lime. The truck will also be inspected and any lime found on the truck will be washed off using clean water and brushes, as appropriate to remove visible traces of lime from the truck. The truck will not be allowed to leave the Lime Delivery Pad until cleanup of the pad surface and the has been completed. The water and lime collected in the sump will be removed and the sump cleaned as outlined below. Lime from cleanup will be reused in the treatment process if it is of sufficient quality. If contamination or debris is mixed with the lime it will be allowed to dry and disposed with the sludge from the groundwater treatment process.

For a moderate spill, the Operator must evaluate the spill and determine an appropriate way to proceed with cleanup. Cleanup options include removal of lime slurry using a shovel plastic bucket, washing the lime to the sump using a clean water hose, and brushes, or removal using a vacuum truck followed by clean water and brush wash. If any lime is present on the truck tires or chassis, the affected area will be washed with clean water and brushed as appropriate to remove lime. If the recovered lime slurry is of adequate quality, it will be placed into the lime storage tank for use in the treatment process. If the lime contains debris or is contaminated, it would need to be disposed by a commercial disposal firm in accordance with applicable

regulations. The truck will be allowed to leave the Lime Delivery Pad after cleanup of the surface has been completed. Water and lime collected in the sump will be removed and the sump cleaned as described below.

For a large spill, such as loss of the entire contents of the lime delivery truck to the Lime Delivery Pad, a commercial cleanup contractor will be dispatched to the site to remove the spilled lime, clean the truck, clean the Lime Delivery Pad, and to clean the Lime Delivery Pad sump. Any spill which results in the discharge of lime outside the Lime Delivery Pad and sump will be immediately reported in accordance with the Spill Response Plan presented in Section 7 of the O&M Manual.

Spills contained within the Environ-Box™ will be immediately cleanup up after the truck has left the Lime Delivery Pad. The Operator will remove lime to the extent possible using trowels or spoons. Lime residue will be flushed to a bucket via a plastic hose connected to the Environ-Box™ drain valve. Brushes will be used as appropriate. Cleanup will continue until there is no visual evidence of residual lime in the Environ-Box™.

The Lime Delivery Pad sump will be emptied and cleaned as described in Procedure P-320 after cleanup of any spills to the Pad. Water and lime in the sump will be removed by vacuum truck. Following removal of the lime and water, the sump will be rinsed using the clean water hose. Rinse water will be tested for pH by the Operator. Rinsing will continue until testing shows that the rinse water pH within the range of 6.5 to 8.5. Rinse water not within this pH range will be removed from the sump by the vacuum truck. Removed sump water will be disposed in accordance with applicable regulations by the commercial vacuum truck company. As only lime will be handled in the Lime Delivery Pad, the sump water pH will not be sufficiently high to designate the water as a characteristic Dangerous Waste.

This page intentionally left blank.

4.0 Well and Piezometer Maintenance BMPs

Maintenance of extraction wells and piezometer transducers may be required occasionally. It is important that groundwater from the subsurface is not spilled onto the ground surface.

As a piezometer transducer consists only of the transducer and an electrical cable, when a transducer is removed from the ground it should simply be placed into a 5-gallon bucket. It can then be decontaminated using a detergent such as Alconox and a rag or paper towels.

If an extraction well pump needs to be removed for maintenance, the operator should place a layer of plastic sheeting (Visqueen or similar) on the ground to contain any drips or spillage. When the tubing and pump are removed, care should be taken to direct the water which may be present in the tube into a 5-gallon bucket. After the conclusion of the pump maintenance, the contents of that bucket must be dumped into the sump, head tank, or oxidation tank inside the GWTP building. The plastic sheeting must be decontaminated using Alconox and a rag or paper towels, and then disposed of in the roll off bin onsite.

This page intentionally left blank.

5.0 Pollution Prevention Team

5.1 ROLES AND RESPONSIBILITIES

The pollution prevention team consists of personnel responsible for implementation of the SWPPP, including the following:

- Process Operator-responsible for performing the work described in this SWPPP in conformance with the BMPs and applicable O&M procedures and for conducting inspections described in this SWPPP.
- Process Operations Supervisor-responsible for general supervision of the Process Operator and reviewing work performed by the Process Operator to ensure the procedures described in this SWPPP are properly implemented.
- Process Engineer-responsible for overall review of operations and maintenance of the Site. Responsible for initiating procedure, BMP, or facility modifications needed to properly manage stormwater at the Site.
- Emergency Ecology Contact—NPDES permit manager at Ecology to be contacted in the event of a stormwater emergency. This contact is in addition to the Ecology contacts identified in the Spill Control Plan.
- Non-Emergency Ecology Contact—Site manager at Ecology that can be contacted as appropriate for non-emergency issues.
- Owner Contact—individual that is the Owner or representative of the Owner to be contacted in the case of an emergency or other issue.

5.2 TEAM MEMBERS

Names and contact information for those identified as members of the pollution prevention team are provided in Table 1. The personnel designated in Table 1 will be responsible for assigning their project responsibilities to a qualified and competent person during times they may be unavailable. This table will be reviewed and revised at least annually to ensure the names and phone numbers are accurate.

This page intentionally left blank.

6.0 Reporting and Recordkeeping

6.1 RECORDKEEPING

A site log book will be maintained for all on-site construction activities including a record of the implementation of the SWPPP.

The site log book, the SWPPP, and any other relevant documentation will be retained during the life of the construction project and for a minimum of 3 years after construction.

The SWPPP and site log book will be retained on-site or within reasonable access to the construction site, and will be made immediately available upon request to Ecology or to representatives of local jurisdictions. A copy of this SWPPP will be provided to Ecology within 14 days of receipt of a written request for the SWPPP from Ecology. A copy of the SWPPP or access to the SWPPP will be provided to the public within a reasonable amount of time when requested in writing.

6.2 UPDATING THE SWPPP

This SWPPP will be modified if it is determined to be ineffective in eliminating or significantly minimizing pollutants in stormwater discharges from the work areas, or if there has been a change in design, construction, operation, or maintenance at the Site that has a significant effect on the discharge, or potential for discharge, of pollutants to the waters of the State. The SWPPP will be modified within seven (7) days of a determination by a CESCL, based on inspection(s), that additional or modified BMPs are necessary to correct problems identified, and an updated timeline for BMP implementation will be prepared.

6.3 NOTIFICATION OF DISCHARGE

If there is a stormwater discharge from the work area and it causes a potential threat to human health or the environment, the following steps will be taken:

1. Ecology will be immediately notified.
2. Immediate action will be taken to sample and control the discharge and to correct the problem. If applicable, sampling and analysis results will be submitted to Ecology within 5 days of the initial discharge.
3. A detailed written report describing the discharge will be submitted to Ecology within 5 days, unless requested otherwise by Ecology.

Chemical spills to areas outside the building or Lime Delivery Pad will be addressed as described in Section 7 of the O&M Manual.

This page intentionally left blank.

7.0 References

AMEC Earth and Environmental, Inc. (AMEC). 2011. *Wetland Determination and Delineation, B&L Woodwaste Site Remediation*. Prepared for Floyd|Snider. May.

Washington State Department of Ecology (Ecology). 2005. *Stormwater Management Manual for Western Washington, Publication Numbers 05-10-029 through 05-10-033:* Washington State Department of Ecology, Water Quality Program. Olympia, Washington. February.

TABLE 1
Pollution Prevention Team Members
B&L Woodwaste Site

Title	Name(s)	Phone Number
Process Operator	Frank Rorie	360-509-2787
Process Operations Supervisor	Michael Kehoe	217-521-5580
Process Engineer	Charles Hand	206-342-1769
Emergency Ecology Contact	Mohsen Kourhedar	360-407-6256
Alternate Ecology Contact	Dom Reale	360-407-6266
Owner Contact	Dan Silver	360-754-9343

Revised October 15, 2013

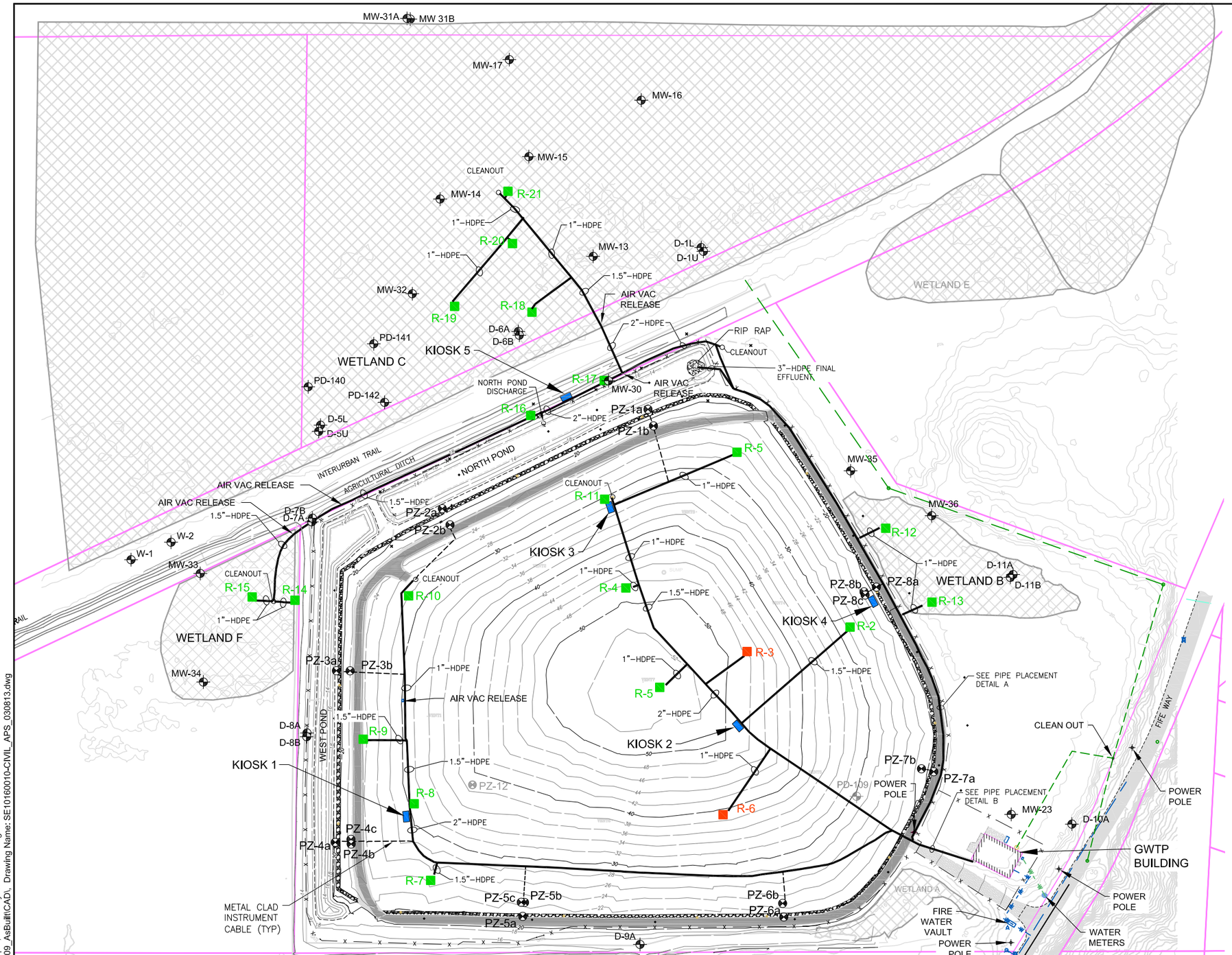

LEGEND:

- TAX PARCEL LINE
- FENCE LINE
- 12" DIAMETER CULVERT
- AGRICULTURAL DITCH
- WETLAND
- STORMWATER COLLECTION DITCH
- PERIMETER ROAD
- GROUNDWATER COLLECTION LINE
- COMMUNICATION LINE
- 2" POTABLE WATER LINE
- 6" FIRE WATER LINE
- WATER LINE
- SANITARY SEWER LINE
- R-5 EXTRACTION WELL
- R-3 EXTRACTION WELL (INACTIVE)
- MW-30 MONITORING WELL
- PZ-8b PIEZOMETER

NOTE:
UNDERGROUND LINE LOCATIONS ARE APPROXIMATE.

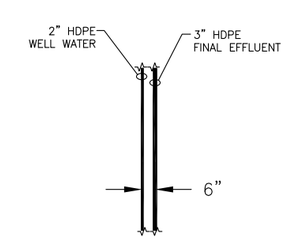

PIPE PLACEMENT DETAIL A
NTS

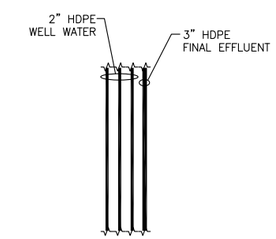

PIPE PLACEMENT DETAIL B
NTS

SCALE BAR (1" = 150'–0")
0 150' 300' 450'

REFERENCES:
PLANS

DATUM
HORIZONTAL: WASP–NAD83–S FEET
VERTICAL: NAVD88 FEET

NO.	REVISION	DATE	APRVD
1	ISSUED FOR REVIEW	FEB 25	WJM
2	ISSUED FOR PERMIT	MAR 18	GP
3	ISSUED FOR PLANS AND SPECIFICATIONS	APR 8	WJM
4	ISSUED FOR TENDER	MAY 26	WJM
5	ISSUED FOR FINAL ENGINEERING DESIGN	JLY 26	LDV

DRAWN JR
DESIGNED ES
CHECKED GP
REVIEWED WJM/LMM

FLOYD | SNIDER

amec

AMEC Environment & Infrastructure
600 University Street
Suite 600
Seattle, Washington 98101

GROUNDWATER RECOVERY AND TREATMENT PLANT PIPING LAYOUT

B&L WOODWASTE SITE
PIERCE COUNTY, WASHINGTON

DATE: 03/15/13
PROJECT NO.: SE10160010

Figure 1

Plot Date: 03/15/13 - 2:33pm, Plotted by: adam.stenberg
Drawing Path: S:\13488\009_AsBuilt\CAD\, Drawing Name: SE10160010-CIVIL_APS_030813.dwg

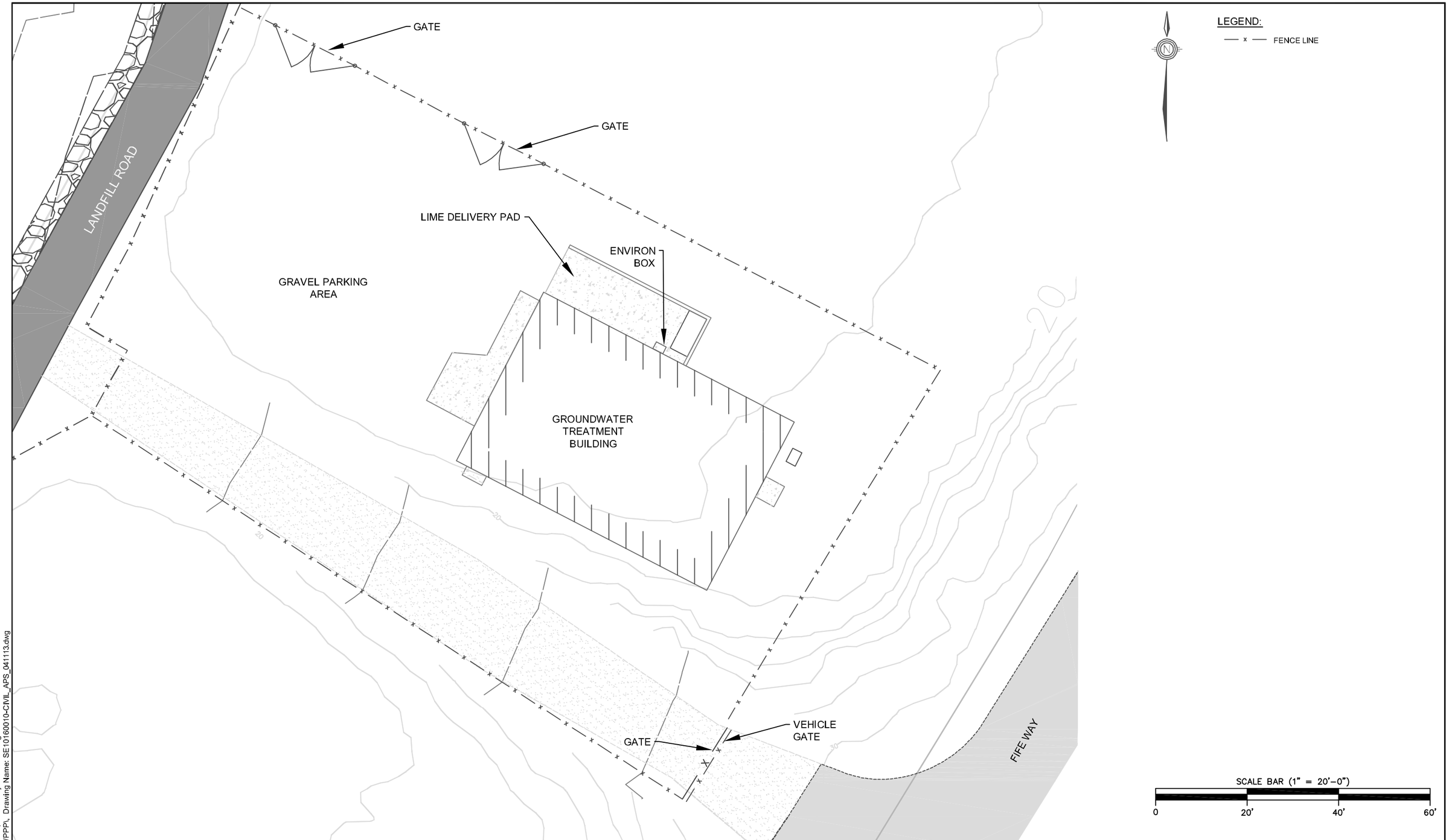

Plot Date: 04/11/13 - 9:38am, Plotted by: mike.stenberg
Drawing Path: Z:\B&L SWPPP\, Drawing Name: SE10160010-CIVIL_APS_041113.dwg

REFERENCES:
PLANS

DATUM
HORIZONTAL: WASP-NAD83-S FEET
VERTICAL: NAVD88 FEET

NO.	REVISION	DATE	APRVD

DRAWN
DESIGNED
CHECKED
REVIEWED

FLOYD | SNIDER

amec

AMEC Environment & Infrastucture
600 University Street
Suite 600
Seattle, Washington 98101

SWPPP SITE PLAN

B&L WOODWASTE SITE
PIERCE COUNTY, WASHINGTON

DATE: 04/11/13
PROJECT NO.: SE10160010

FIGURE
2

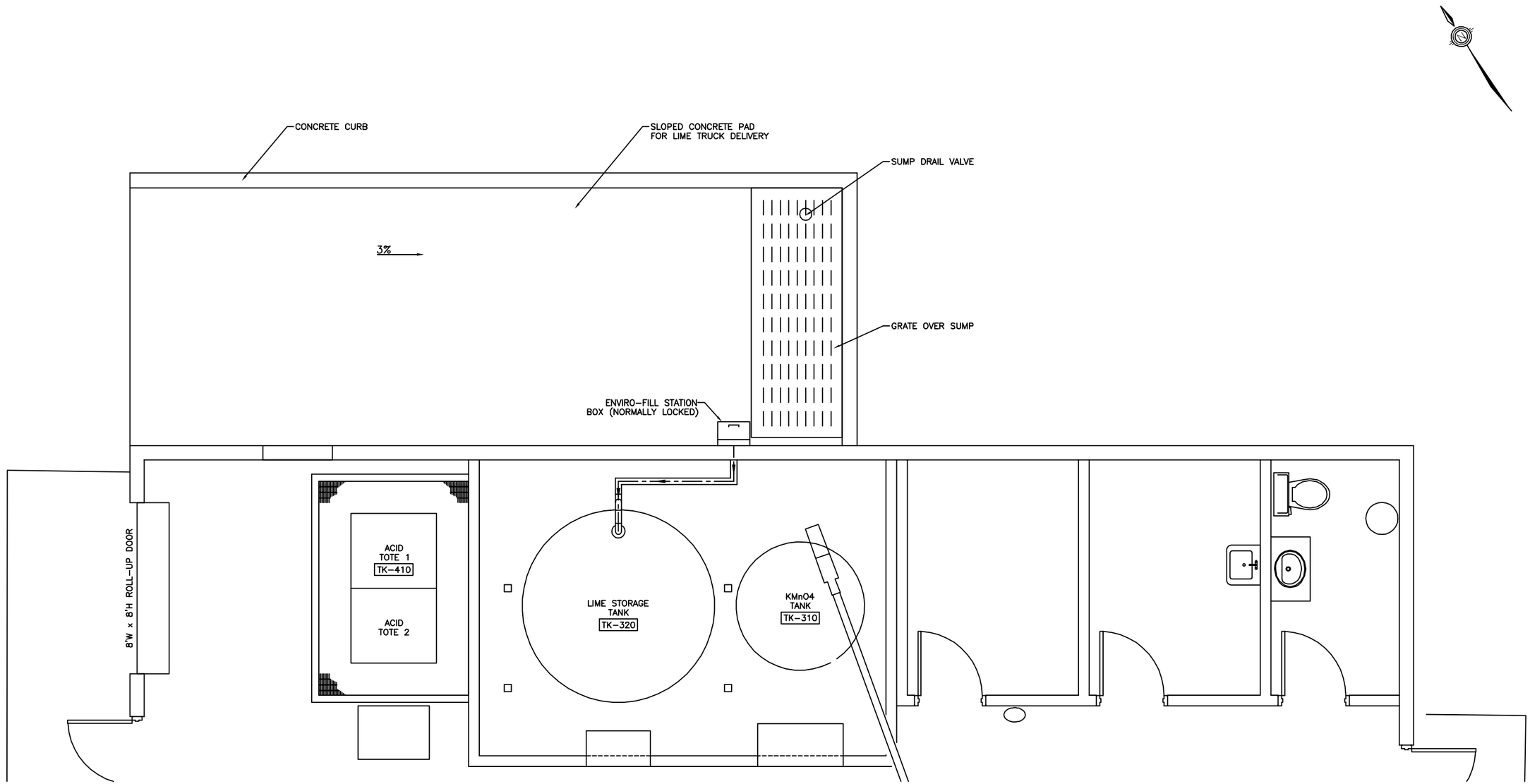

PLAN VIEW

SCALE BAR
0 2'-6" 5'-0" 7'-6"

REFERENCES:	NO.	REVISION	DATE	APRVD
PLANS				
DATUM HORIZONTAL: WASP-NAD83-S FEET VERTICAL: NAVD88 FEET				

DRAWN
DESIGNED
CHECKED
REVIEWED

FLOYD | SNIDER

amec

AMEC Environment & Infrastucture
600 University Street
Suite 600
Seattle, Washington 98101

LIME DELIVERY PAD
PLAN VIEW

B&L WOODWASTE SITE
PIERCE COUNTY, WASHINGTON

DATE: 04/11/13
PROJECT NO.: SE10160010

FIGURE 3

Plot Date: 04/11/13 - 9:35am, Plotted by: mike.stenberg
Drawing Path: Z:\B&L SWPPP\, Drawing Name: SE10160010-MECH_APS_041013.dwg

Appendix D

Health and Safety Plan

Site-Specific Health and Safety Plan: Facility Operation and Maintenance

B&L Woodwaste Site

1522 Fife Way East

Milton, Washington 98354

Prepared for:
B&L Woodwaste Custodial Trust

Prepared by:

Floyd|Snider
600 Union Street, Suite 600
Seattle, Washington 98101

AMEC Environment & Infrastructure, Inc.
600 University Street, Suite 600
Seattle, Washington 98101

June 2012

TABLE OF CONTENTS

TABLES

FIGURES

ATTACHMENTS

SITE-SPECIFIC HEALTH AND SAFETY PLAN: GROUNDWATER RECOVERY AND TREATMENT SYSTEMS

B&L Woodwaste Landfill
Seattle, Washington

1.0 PURPOSE

This Health and Safety Plan Appendix (HASP Appendix) outlines the health and safety procedures that shall be followed while conducting field activities related to operation and maintenance of the groundwater recovery system, groundwater interceptor trench, the groundwater treatment system, Landfill cap, and associated buildings and fencing. The project site is located at 1522 Fife Way East, Milton/Fife, WA.

This HASP Appendix defines site-specific hazards and controls to prevent injury and illness for project personnel working on remediation and monitoring conducted at the Site. The observance and practice of the procedures in this plan are mandatory for personnel working on the above remedy components. All contractors and visitors associated with this work shall be made aware of the requirements of this plan; however, contractors are responsible for the health and safety of their own employees and subcontractors they employ and for following all applicable federal, state, and local regulations. At a minimum, any contractors associated with this work must meet the requirements of this document.

This HASP Appendix has been reviewed jointly by the AMEC Project Manager and the AMEC Project Health and Safety Officer. Prior to entering the project area, project personnel shall read this plan and be familiar with health and safety procedures specific to their project responsibilities when working at the project. A copy of the plan shall be available at the Site project office and, for work conducted outside the B&L Property, a copy shall be readily available at the off-property work area. The work area and Site history are described in the main body of the Site Specific HASP.

This page intentionally left blank.

2.0 SCOPE OF FIELD ACTIVITIES

Project activities will include operation and maintenance of the groundwater interceptor trench, the groundwater recovery and treatment system, and associated security systems and buildings associated with the Site remedy. Tasks will include:

- Operation of groundwater treatment system equipment, machinery, and controls/instruments;
- Operation of groundwater recovery wells, pumps, and controls/instruments;
- Collection of groundwater samples from groundwater recovery wells as needed to support operations;
- Contaminated water sampling from treatment system components;
- Laboratory testing and analysis using onsite test kits and instruments;
- Process chemical receipt and handling;
- Operation of the groundwater interceptor trench system;
- Maintenance of equipment, machinery, and instruments associated with the interceptor trench, groundwater recovery system, and groundwater treatment system;
- Monitoring and maintenance of systems associated with the groundwater treatment building (e.g., heating system, sewage lift station);
- Inspection and maintenance of the Landfill cap, perimeter drainage system, and ponds; and
- Inspection and maintenance of security fencing and surveillance systems.

The field activities involve potential exposure to contaminated groundwater, hazardous chemicals, mechanical hazards associated with machinery and equipment, and electrical hazards. Except for operations and maintenance activities conducted on groundwater recovery wells located on adjacent wetlands or agricultural properties, field work addressed by this HASP Appendix will be performed on the B&L Property.

A job safety analysis (JSA) has been completed for each routine task associated with project work addressed by this HASP Appendix. The JSA has been built into the specific Operations

Procedure developed for each task. The Operations and Maintenance Procedures (O&M Procedures) are included in the Operations, Monitoring, and Maintenance Plan (OMMP); these detailed procedures are not reproduced in the HASP Appendix, but are included in this HASP Appendix by reference. Project personnel are required to be familiar with and to follow the O&M Procedures when performing project work. Material Safety Data Sheets (MSDS) for chemicals that will be used in performing project tasks or otherwise will be present in the work areas are provided in Attachment 2.

3.0 ADMINISTRATIVE INFORMATION

Project Name: B&L Woodwaste Site Groundwater Recovery & Treatment System O&M

Project Start Date: May 2012

Project Address: 1522 Fife Way East, Milton, WA

AMEC Project Manager: Larry McGaughey

Telephone No.: (206) 342-1788

AMEC Project Health & Safety Officer: Tim Reinhardt

Telephone No.: (206) 838-8464 / (425) 241-5816

This page intentionally left blank.

4.0 PRIMARY RESPONSIBILITIES

4.1 PROJECT MANAGER

The Project Manager (PM) will have overall responsibility for the success of the project, including the successful implementation of this HASP Appendix. The PM will review health and safety issues as needed and as consulted and will have the authority to reallocate resources and personnel to safely accomplish the field work.

In addition the PM shall:

1. Direct all project personnel involved in the work covered by this HASP Appendix;
2. Make the Project Health and Safety Officer aware of all pertinent project developments and changes or revisions to project plans;
3. Make available the resources that are necessary for a safe working environment;
4. Maintain communications with the client, as necessary; and
5. Ensure that all project personnel have received required training, are aware of the potential hazards associated with the project work, have been instructed in the work practices necessary for personal health and safety, and are familiar with the HASP Appendix and safe O&M Procedures for all scheduled activities and for dealing with emergencies.

4.2 PROJECT HEALTH AND SAFETY OFFICER

The Project Health and Safety Officer (PHSO) shall:

1. Advise PM and project personnel on all health and safety aspects of the work covered by this HASP Appendix activities conducted by project personnel in the field;
2. Specify exposure monitoring as appropriate to assess health and safety conditions in the field;
3. Review any accident/incident reports and make corrective action recommendations;
4. Modify the HASP Appendix as required based on accidents/incidents and findings regarding hazards and work practices;
5. Report all accidents/incidents and findings regarding personnel exposure, field hazards, and work practices to the PM;

6. Suspend field work if the PHSO believes that project personnel, including any subcontractor's personnel, are or may be exposed to an immediate health hazard.

7. Periodically inspect/audit the project site for compliance with health and safety standards and safe practices.

4.3 SITE SAFETY OFFICER

Field work addressed by this HASP Appendix will usually be done by a single worker. Multiple workers may be present during some maintenance or calibration work. The Site Safety Officer (SSO) will normally be the operator assigned to the Site, and the SSO will have the responsibilities of both the SSO and the Site Supervisor (see Section 4.4). If multiple personnel are on site, the PM will ensure that SSO Site Supervisor responsibilities are clearly defined; the SSO may function as the Site Supervisor, as designated by the PM. The SSO shall:

1. Ensure that appropriate personal protective equipment is available to and used by project personnel;

2. Ensure that all AMEC personnel have received required training, are aware of the potential hazards associated with site operations, have been instructed in the work practices necessary for personal health and safety, and are familiar with the HASP Appendix's procedures for all scheduled activities and for dealing with emergencies;

3. Suspend field work if the SSO believes that project personnel are or may be exposed to an imminent health hazard;

4. Implement the HASP Appendix and report any observed significant differences from the field conditions anticipated in the plan to the PM;

5. Review O&M Procedures before performing project tasks to ensure that safe practices are followed;

6. If directed by the PHSO, perform exposure monitoring;

7. Assume other duties as directed by the PHSO; and

8. Prepare reports of any observed accidents/incidents or inadequate work practices and communicate them to the PM and PHSO.

4.4 SITE SUPERVISOR

The Site Supervisor shall:

1. Maintain control of the project site and direct daily field operations to be consistent with applicable environmental and health and safety regulations, O&M Procedures, and this project HASP Appendix, and enforce safe work practices and proper utilization of personal protective equipment by all project personnel working in the field;

2. With guidance from the PHSO, observe AMEC and subcontractor's procedures with respect to health and safety;

3. Suspend field work and, as appropriate, coordinate work suspension through the subcontractor's site supervisor, if the SS believes that any project personnel are or may be exposed to an imminent health or safety hazard;

4. Implement the HASP Appendix and report any observed significant differences from the field conditions anticipated in the plan to the project manager;

5. Conduct field safety briefings as needed;

6. Ensure that required personal protective, monitoring, and emergency equipment is provided and maintained in effective working condition prior to performing assigned field work; and

7. Report observed accidents/incidents or inadequate work practices to the PM and the PHSO.

4.5 PROJECT PERSONNEL

Project personnel involved in project work shall:

1. Perform assigned work in accordance with the O&M Procedures and safe work practices. Project personnel shall take reasonable precautions to prevent injury to themselves and to their fellow workers;

2. Perform only those tasks that they can do safely and for which they have proper personnel protective equipment, tools, and safeguards. Immediately report accidents and/or unsafe conditions to the SSO or PHSO;

3. Follow the procedures set forth in the HASP Appendix and report to the SSO, Site Supervisor, or PHSO any observed deviations by project personnel from the procedures described in this plan; and

4. Inform the SSO and PHSO of any physical conditions that might affect their ability to perform the planned field tasks prior to performing the work.

4.6 TRAINING REQUIREMENTS

All project personnel must comply with applicable regulations specified in Title 29, U.S. Code of Federal Regulations (29 CFR) Part 1910.120 and the Washington Administrative Code (WAC) Chapter 296-843, hazardous waste operations (HAZWOPER), administered by the Washington State Department of Labor and Industries (L&I). These include completion of a 40-hour health and safety training course for HAZWOPER, an annual 8-hour refresher training, and participation in AMEC's medical surveillance program and respiratory protection program. In addition to the 40-hour course and 8-hour refreshers, the Site Supervisor (and SSO, if performing the duties of the SS) will have completed an 8-hour course for hazardous waste site supervisors as required by WAC 296-843-20015. Each field worker will also have a minimum of 3 days of supervised field experience at a hazardous waste site before working in the project area without close, direct, supervision. Documentation of all required training for personnel assigned to the project site will be maintained at the project site by the Site Supervisor.

Additional site-specific training that covers task-specific hazards; personal protection equipment (PPE) requirements, use, and limitations; decontamination procedures; and emergency response information as outlined in this HASP Appendix will be given by the PHSO or SSO before performed project work. Site-specific training briefings should be documented on the "Project Health and Safety Field Meeting Form," included as Attachment 1.

4.7 MEDICAL SURVEILLANCE

All AMEC personnel assigned field duties for the project area shall participate in AMEC's medical surveillance program, which includes annual audiometric and physical examinations for employees involved in HAZWOPER projects. It requires that all such personnel have medical clearance before being issued a respirator and participating in field activities. Frequency of medical examinations which comply with 29 CFR § 1910.120(f)(3) and WAC 296-843-21005 are:

- Prior to performing field work;
- At least once every 24 months (12 months if exposed to air contaminants above the permissible exposure limit [PEL]), or if working in respiratory protection more than 30 days per year);
- At termination of employment;

- Upon occurrence of possible unprotected overexposure to chemicals or harmful physical agents; and
- More frequently if deemed necessary by a physician.

5.0 HAZARD ASSESSMENT

An assessment of the potential hazards that may be encountered during project work is designated by project task in Table 1 and discussed below.

5.1 POTENTIAL CHEMICAL HAZARDS AT SITE

Listed below are hazardous materials and contaminants that are suspected to be present for the work addressed by this HASP Appendix within the project area. Other hazardous substances are present in wastes and affected soil and sediments present at the Site; project work is not expected to result in potential exposure to landfilled wastes or affected soil/sediment. If it becomes necessary to conduct subsurface work, a separate HASP must be prepared specifically addressing the potential hazards associated with the subsurface work. Additional information on the potential chemical hazards associated with the project work, including their acute exposure effects, is noted below.

TABLE 1

HAZARDOUS CONSTITUENTS KNOWN OR SUSPECTED
B&L Woodwaste Site, Groundwater Recovery and Treatment System
Pierce County, Washington

Chemical, Form	Media	Maximum Concentration	Routes of Exposure[2]	Acute Exposure Symptoms
Contaminated Groundwater				
Arsenic	GW	4,540 µg/L	RISE	Skin irritation, possible dermatitis; respiratory distress; diarrhea; kidney damage; muscle tremor, convulsions; possible gastrointestinal tract, reproductive effects; possible liver damage

TABLE 1

HAZARDOUS CONSTITUENTS KNOWN OR SUSPECTED
B&L Woodwaste Site, Groundwater Recovery and Treatment System
Pierce County, Washington

Chemical, Form	Media	Maximum Concentration	Routes of Exposure[2]	Acute Exposure Symptoms
Treatment System Chemicals				
Sulfuric Acid, ~93%	Liquid	93-98%	RISE	Very hazardous upon skin or eye contact, producing burns, itching, redness, possible blistering; liquid mist may produce mucous membrane damage; inhalation of mist will produce extreme irritation of respiratory tract
Lime Slurry	Liquid	3.5 lb $Ca(OH)_2$ per gal water	RISE	Irritation of skin upon contact, burning of eyes if contacted; severe irritation of respiratory system if inhaled
Potassium Permanganate	Solid	Industrial Grade $KMnO_4$ Crystals	RISE	Irritation, blistering upon contact; burning, sneezing, and coughing upon inhalation; corneal damage or blindness upon eye contact
Potassium Permanganate	Liquid	3% solution in water	RISE	Skin and eye irritator causing redness and itching, nausea and vomiting if ingested
Coagulant, Nalco Ferralyte 8130	Liquid	100%	RISE	Skin and eye irritator. May injure eye tissue if not removed promptly. Ingestion may cause irritation to the gastrointestinal tract. Inhalation of liquid mist may be irritating to eyes, nose, throat and lungs.
Polymer, Nalco Core Shell 71307	Liquid	100%	RISE	Can cause mild eye irritation. Prolonged skin contact will lead to discomfort and dermatitis

1. Maximum concentrations are in milligrams per kilogram for soil samples, and micrograms per liter for water samples
2. RISE = respiratory, ingestion, skin, eyes.

Several of the chemicals used in the groundwater treatment process and in the laboratory are damaging to the eyes, skin, and mucous membranes. Along with wearing the PPE designated for the task when handling these chemicals, a plumbed eyewash and safety shower is located centrally within the building. Workers will ensure that they know the location of the safety shower/eyewash fountain and that it is readily accessible prior to commencing a task that has any potential for eye or skin exposure to corrosives, caustics, water reactive chemicals, and/or oxidizers.

5.2 POTENTIAL PHYSICAL HAZARDS

Potential physical hazards are listed in Table 2 and discussed below.

TABLE 2

ANTICIPATED HAZARDS
B&L Woodwaste Site
Pierce County, Washington

	Hazards											
Task	**Slip/Trip/Fall**	**General Electrical Hazards**	**Noise**	**Heat Stress**	**Cold Stress**	**Sunburn**	**Confined Spaces**	**Mechanical Hazards**	**Heavy Equipment**	**Traffic**	**Insects and Wildlife**	**Lockout/Tag Out/ Hazardous Energy**
Groundwater Recovery Well Operation & Maintenance	X	X	X	X	X	X		X			X	X
Groundwater Treatment System Operations	X	X	X	X				X				X
Laboratory Testing and Analysis	X	X	X	X				X				
Groundwater Sampling	X		X	X								
Chemical Delivery & Handling	X	X	X	X	X	X			X	X	X	

Common safety hazards include slip/trip/fall hazards, chemical handling hazards, contaminated media, debris and tools, and hazards associated with working around machinery, equipment, and with hand or power tools. All project area personnel will keep materials, equipment, and debris organized and flagged as necessary to prevent trip hazards. Project area personnel will wear the following PPE at a minimum when entering and/or working in the groundwater treatment building:

- Sturdy work boots or shoes with steel toes and shanks;
- Safety glasses; and
- Hard hats.

Work conducted outside the building will require the same PPE with the exception of hard hat. Hard hats are not required in the office, laboratory, or lavatory; and safety glasses are not required in the office or lavatory. Additional PPE may be required for specific tasks, as described in the O&M Procedures for the specific work task.

5.2.1 General Electrical Hazards

Electrical hazards are present throughout the GWTP Building, as much of the equipment, instrumentation, and controls require electrical power. Prior to performing maintenance or servicing of any process equipment, instruments, or controls, documented lockout/tag out procedures must be followed, in accordance with the O&M Procedures. Circuits powering equipment, instruments, and/or controls must be confirmed to be de-energized prior to removing or opening housings to perform service or when entering confined spaces where water may be present.

To prevent electrocution hazards caused by utilizing electrically powered tools and/or other mobile equipment, all electrical extension cords must be rated for the combined amperage of the equipment they power, and must be factory listed as rated SJOW or STOW (an “-A” extension is acceptable for either) and inspected prior to each use for defects in the cord and plugs. Any reduction or damage to the original cord jacket, gap between the strain relief, or any evidence of overheating (cord discoloration or melting) will result in the immediate destruction of the cord and replacement, as necessary.

The following safe work practices will also be enforced.

- No exposed energized conductors operating above 50 volts to ground will be allowed unless properly guarded from contact by site workers.
- Electrical distribution systems and electrical repairs to equipment operating above 50 volts to ground will be performed only by a qualified licensed electrician.
- All portable power tools will be inspected by the user for defects before use and will be of a double-insulated design.
- Any generator brought to the work area will be grounded to a suitable earth and will be equipped with overcurrent protection.
- All extension cords will be protected by a ground-fault circuit interrupter, which will be tested before each use.
- No extension cords will be routed through walls, ceilings, doors, or windows.

5.2.2 Noise Hazards

GWTP process equipment will operate continuously and has the potential for requiring hearing protection. Site personnel will wear hearing protection when working in any areas designated as requiring hearing protection. This measure is designed to prevent hearing loss that can occur when daily 8-hour time weighted average noise exposures meet or exceed 85 decibels (dBA) (WAC 296-817-20015).

5.2.3 Heat Stress Hazards

Heat stress is a slight hazard during the summer months in the Pacific Northwest, but becomes a significant hazard for workers wearing protective clothing under certain conditions. Heat stress may affect workers to varying degrees. The signs, symptoms, and treatment of these varying degrees of heat stress are summarized below.

- Heat rash may result from exposure to heat or humid air.
- Heat cramps are caused by heavy sweating with inadequate electrolyte replacement. Signs and symptoms include muscle spasms and pain in the hands, feet, and abdomen. Persons experiencing these symptoms should rest in a cooler area, drink cool (not cold) liquids, and gently massage cramped muscles.
- Heat exhaustion occurs from increased stress on various body organs and may include inadequate blood circulation due to cardiovascular insufficiency or dehydration. Signs and symptoms include pale, cool, moist skin; heavy sweating; dizziness; nausea; and fainting. Persons experiencing these symptoms should lie down in a cooler area, drink cool liquids with electrolytes (Gatorade, etc.), remove

any protective clothing, and cool body with wet compresses at forehead, back and neck, and/or armpits.

- Heat stroke is the most serious form of heat stress. Temperature regulation fails and the body temperature rises to critical levels. Immediate action must be taken to cool the body before serious injury and death occur. Competent medical help must be obtained. Signs and symptoms are red, hot, usually dry skin; lack of or reduced perspiration; nausea; dizziness and confusion; strong, rapid pulse; and coma.

From May 1 to September 30, if physically demanding field work will occur in the combination of temperatures and clothing/PPE ensembles shown in the table below, actions will be taken to prevent heat stress among the affected workers.

WORK AREA TEMPERATURE ACTION LEVELS

Non-breathing clothes, including vapor- and chemical-resistant suits (Levels B and A, and impermeable raingear)	**52° F**
Double-layer woven clothes, including coveralls, jackets, and sweatshirts	**77° F**
All other clothing	**89° F**

Site staff working outdoors will be trained in heat-related illness and in management of potential risk factors in accordance with WAC 296-62-095. To prevent heat stress, at least one quart per person-hour of cool potable water will be readily available via individual cups, and field personnel will be encouraged to drink plenty of fluids and take periodic work breaks in hot weather. The SSO will promptly consult with the PHSO, and a radial pulse monitoring method will be implemented to ensure that adequate work-rest cycles will be established to manage heat stress potential among the affected workers. Combined temperature and humidity conditions that result in a heat index exceeding 100° will trigger mandatory radial pulse monitoring and heat stress management. The following chart indicates the relative risk of heat stress at combinations of temperature and relative humidity.

Temperature (°F)

Relative Humidity (%)	80	82	84	86	88	90	92	94	96	98	100	102	104	106	108	110
40	80	81	83	85	88	91	94	97	101	105	109	114	119	124	130	136
45	80	82	84	87	89	93	96	100	104	109	114	119	124	130	137	
50	81	83	85	88	91	95	99	103	108	113	118	124	131	137		
55	81	84	86	89	93	97	101	106	112	117	124	130	137			
60	82	84	88	91	95	100	105	110	116	123	129	137				
65	82	85	89	93	98	103	108	114	121	128	136					
70	83	86	90	95	100	105	112	119	126	134						
75	84	88	92	97	103	109	116	124	132							
80	84	89	94	100	106	113	121	129								
85	85	90	96	102	110	117	126	135								
90	86	91	98	105	113	122	131									
95	86	93	100	108	117	127										
100	87	95	103	112	121	132										

Likelihood of Heat Disorders with Prolonged Exposure or Strenuous Activity

Caution Extreme Caution Danger Extreme Danger

5.2.4 Cold Stress Hazards

Exposure to even moderate levels of cold can cause the body's internal temperature to drop to a dangerously low level. This is called hypothermia, and is a significant hazard in the fall, winter, and spring months in the Pacific Northwest. Exposure to temperatures below freezing can cause frostbite of hands, feet, and face.

Symptoms of hypothermia include:

- vague, slow, slurred speech;
- forgetfulness, memory lapses;
- inability to use hands;
- frequent stumbling;

- drowsiness.

To prevent hypothermia, project personnel should stay dry and avoid exposure. Project personnel are encouraged to wear sufficient clothing in layers such that outer clothing is wind- and waterproof and inner layers retain warmth (wool or polypropylene). Project personnel should keep hands and feet well protected at all times, especially when working in cold conditions.

5.2.5 Sunburn Hazards

Skin exposure to ultraviolet radiation can result in sunburn. Site personnel will use long-sleeved shirts, hats, and sunscreen to protect against sunburn when working outdoors.

5.2.6 Confined Spaces

Confined spaces and associated hazards include the following:

Confined Space	Potential Hazards	Lockout / Tag Out
Head Tank, TK-100	Engulfment in water, Arsenic contaminated water (wells)	Well pumps
Oxidation Tank, TK-110	Engulfment & arsenic contaminated water (TK-100), Contaminated water from process sump (TK-250), Potassium Permanganate feed (TK-310), Rotating machinery (mixer)	Permanganate dosing pump, well pumps, process sump pump, mixer
Co-Precipitation Tank, TK-120	Engulfment & arsenic contaminated water (TK-110), Lime Slurry dosing, Sludge recycle, Rotating machinery (mixer)	Lime dosing pump, sludge line to co-precipitation tank, well pumps, mixer
pH Adjust Tank, TK-420	Engulfment & arsenic contaminated water (TH-130), Sulfuric acid dosing, Rotating machinery (mixer)	Acid dosing pumps, well pumps, mixer
Potassium Permanganate Feed Tank, TK-310	$KMnO_4$ powder addition, Engulfment (potable water line), Rotating machinery (mixer)	Permanganate conveyor, potable water line, mixer
Lime Storage Tank, TK-320	Engulfment & Lime slurry exposure, Rotating machinery (mixer)	Mixer, lime recirculation pump

Sludge Tank, TK-220	Engulfment and arsenic exposure in sludge (P-220), Polymer exposure (TK-330), Rotating machinery (mixer)	Sludge pump (P-220), polymer feed pump (PU-330A/B), mixer
Sewage Grinder Sump	Exposure to sewage (biological hazard), Low oxygen, methane/H_2S gas, Electrical energy, Grinder pump operation	Sewer grinder pump power, toilet, lab sink, bathroom sink
Interceptor Trench Vaults A & B	Exposure to arsenic contaminated groundwater, Electrical energy, Sump pump operation	Inlet and outlet passive water lines, Sump pump power

No confined space entries will be required during ordinary operations and maintenance procedures. The O&M Procedures for specific tasks will identify any confined space entry that may be necessary for maintenance work. If entry into a confined space is required, the PHSO must be consulted and a confined space entry plan prepared and followed prior to anyone entering the space. The plan will include additional training and certification for confined space entry. A Confined Space Entry Permit, signed by the PHSO, must be obtained prior to entry to a confined space.

5.2.7 Mechanical Hazards

There are a number of electrical motors associated with mixers, pumps, and other process equipment that present mechanical hazards to system operators providing operations and maintenance services. Common mechanical hazards will include spinning blades of mixers, spinning shafts in pumps, rotating augers, and reciprocating shafts in metering pumps. Additionally, there is stored energy in compressed air and hydraulic systems associated with the air compressor, filter press, and drum dumper that present significant mechanical hazards.

Pinch points exist for some equipment (such as mixers or the drum dumper) as the equipment moves through its designed range of motion. Covers and guards are in place to protect workers during normal operations. These guards and covers must be kept in place and be regularly inspected to ensure they are in proper working condition at all times for moving equipment. Proper lockout/tag out procedures must be followed to prevent mechanical energy from harming system operators during machine maintenance. Replacement of all guards and covers is mandatory after completing maintenance and before removing lockout/tag out devices. The safe work practices described in the O&M Procedures must be followed for normal operations and for planned maintenance

5.2.8 Heavy Equipment

Heavy equipment will not be used during normal operations. If it is necessary to use heavy equipment for maintenance or equipment replacement, a task-specific HASP that includes JSAs, will be prepared and implemented to document associated hazards and establish safe work practices.

5.2.9 Traffic Hazards

Delivery truck operations in the work area may pose a hazard to site workers if working outside the GWTP Building. Truck deliveries will be coordinated with work conducted outside the building, and site workers will be notified of pending deliveries. High-visibility safety vests will be worn by personnel working outside the building during truck deliveries. A speed limit of 5 miles per hour on the B&L property will be enforced. Trucks will only be approached from the front or side of the cab, and eye contact with the operator will be made prior to entering the strike radius of the vehicle. Loads leaving the work area will be secured and covered as necessary to prevent loss of material on the highway. Site personnel assisting delivery vehicles by directing the driver while backing to delivery areas will maintain a safe distance from the vehicle and maintain visual contact with the driver.

5.2.10 Insects and Wildlife

Bees, other insects, and spiders may be encountered during site activities. Persons with allergies to bees will make the SS and SSO aware of their allergies and will avoid areas where bees are identified. Black widow, hobo, and brown recluse spiders are occasionally encountered in dry, dark areas. Field personnel will maintain a safe distance from any urban wildlife encountered, including raccoons and rodents, to preclude a bite from a sick or injured animal. Personnel will not put ungloved hands into dark places that could contain spiders, and will use tools to lift covers from catch basins, cleanouts, and well monuments. In order to avoid contact with bees, wasps, spiders, and mosquitoes, field personnel will wear gloves and long sleeved shirts as needed.

5.2.11 Lockout/Tag Out / Hazardous Energy

The groundwater treatment system poses a hazard from exposure to hazardous energy during operation, maintenance, and repair from pressurized, contaminated groundwater, pressurized air, hydraulic systems, and/or from electrical and mechanical energy. Written AMEC Lockout Procedures will be followed whenever these systems must be shut down for maintenance or repair/replacement if the unexpected energizing of the system (or release of stored energy such

as pressure) could cause serious injury to employees. Such activities will be implemented or overseen only by employees named as authorized persons in AMEC's downtown Seattle office lockout program.

The O&M Procedures will inform the operator of lockout/tag out-requirements for normal maintenance procedures. The operator must be lockout/tag out trained in order to complete the maintenance procedures which require such actions. Non-standard maintenance procedures that are not explicitly covered by existing O&M Procedures and this HASP will be performed under a task-specific HASP (including JSAs) approved by the SSO and PM.

5.2.12 Water Hazards

Operations and maintenance of recovery wells located in wetlands areas may present water hazards during periods of the year when these areas are flooded. Special precautions must be taken when working in these areas during the wet season. Whenever work must be conducted when standing water is present in these areas, the provisions for working safely specified in the O&M Procedures must be followed. These provisions will require appropriate waders or flotation devices and working in buddy teams. Specific health and safety precautions identified in the appropriate O&M Procedures must be followed when working on recovery wells in the seasonally inundated areas.

5.3 GENERAL HAZARDS

In working with or around any hazardous or potentially hazardous materials or hazardous situations, field personnel should plan all activities before starting any task. Field personnel shall identify health and safety hazards involved with the work planned and consult with the PM, PHSO or SSO as to how the task can be performed in the safest manner, if he/she has any uncertainties. Standard O&M Procedures, which identify safe work practices, must be followed for all operations and maintenance tasks addressed by the procedures. For any tasks not covered by the standard O&M Procedures and this HASP, a task-specific HASP(including JSAs) must be prepared and submitted to the SSO, PM, or PHSO for approval.

Common field safety hazards include slip/trip/fall hazards, sharp or rough-surface equipment, debris and tools, and hazards associated with working around heavy equipment. All staff who will use portable ladders must be specifically trained in ladder safety. All operations personnel will adhere to the following general safety rules.

- Wear protective equipment and clothing, as specified in Section 6 of this HASP Appendix and as specified in applicable O&M Procedures.
- Do not eat, drink, or use tobacco or cosmetics in restricted work areas.
- Prevent splashing of contaminated groundwater and chemical solutions, and minimize emissions of dust.
- Prevent back injury by never lifting or carrying a load that is heavier than you can comfortably handle. When lifting heavy objects, bend the knees and use the leg muscles, and get assistance when necessary.
- Keep all heat and ignition sources away from combustible liquids, gases, or any flammable materials. When working in areas where combustible gases may be present, use only intrinsically safe (non-sparking) equipment.
- Be familiar with the physical characteristics of the work area, including:
    1. accessibility of other personnel, equipment, and vehicles;
    2. areas of known or suspected chemicals in soil, surface water, or groundwater;
    3. areas where hazardous materials are stored or used;
    4. locations of the safety shower, eye wash fountain, fire extinguishers, and emergency shutdown buttons;
    5. access;
    6. nearest water sources; and
    7. location of communication devices.
- Dispose of wastes generated in accordance with the O&M Procedures.
- Inspect power cords for damage such as cuts and frays. Suspend cords only with nylon rope or plastic “S” hooks.
- When in doubt of your safety, it is better to overprotect.
- Practice defensive driving.
- Wear sturdy outer gloves when handling sharp or rough-surfaced objects.
- Keep a first-aid kit in the work area and/or in a field vehicle when performing field work.

This page intentionally left blank

.

6.0 PERSONAL PROTECTIVE EQUIPMENT

At a minimum, a modified Level D PPE ensemble will be used with the main objective to prevent unnecessary dermal exposure to contaminated groundwater. Additional PPE shall be used in accordance with specific O&M Procedures for specific GWTP operations and maintenance tasks. The PHSO will be consulted to up- or downgrade any PPE requirements, followed by updating of the appropriate O&M Procedure. The following minimum PPE is required.

SYSTEM OPERATION TASKS

PPE Required[1]	Groundwater Well Maintenance	Effluent Water Sampling	Laboratory Analysis	Treatment System Operations	Chemical Delivery Handling
Steel-Toe/Shank Boots (Rubber)	Av			Av	Av
Steel-Toe/Shank Boots (Leather)	X	X	X	X	X
Hard Hat	X	X	Av	X	X
Safety Glasses/Goggles	X	X	X	X	X
Face Shield			Av	Per O&M Procedure	Per O&M Procedure
Ear Plugs	Av	Av	Av	Per O&M Procedure	Av
Gloves:					
Nitrile Inner/Leather Outer	Av	Per O&M Procedure	Per O&M Procedure	Per O&M Procedure	Per O&M Procedure
Nitrile Inner/Rubber Outer	Av	Per O&M Procedure	Per O&M Procedure	Per O&M Procedure	Per O&M Procedure
Nitrile Only	Per O&M Procedure	Per O&M Procedure	Per O&M Procedure	Per O&M Procedure	Per O&M Procedure
Tyvek Coverall (permeable)	Per O&M Procedure	Per O&M Procedure	Per O&M Procedure	Per O&M Procedure	Per O&M Procedure
Chemically Resistant Coverall	Per O&M Procedure	Per O&M Procedure	Per O&M Procedure	Per O&M Procedure	Per O&M Procedure
High-visibility Vest	X	Av	Av	Av	Per O&M Procedure
Respirator (particulate cartridge)	Per O&M Procedure			Av	Per O&M Procedure

Other	Per O&M Procedure	Per O&M Procedure	Per O&M Procedure	Per O&M Procedure	Per O&M Procedure

Abbreviations
Av = Have available at work site
O = PPE Optional
X = PPE Required

This page intentionally left blank.

7.0 ACCESS CONTROL

The purpose of access control is to minimize potential exposure to hazards, to prevent vandalism and access by children and other unauthorized persons, and to provide secure and safe facilities for workers. Fencing, gates, surveillance systems, and building access control will be used to safeguard workers at the project site. Signs will be posted at each door to the GWTP Building stating that only authorized personnel are allowed inside the building. A field log, listing of all personnel present at the project site and listing all visitors, vendors, or contractors is entering the project site will be maintained at the GWTP Building. Arrival and departure times will be noted to enable an accurate roll call for onsite personnel in the event of an emergency.

Work area controls, appropriate safety procedures, and decontamination/PPE areas will be clearly identified to all personnel entering the project area to limit the potential for chemical exposure associated with work activities. Access to the GWTP Building restroom and washing facilities will be identified and provided as appropriate; sanitary facilities in the GWTP Building will be maintained in hygienic conditions at all times.

7.1 COMMUNICATIONS

On-site communications will be by voice, hand-held radio, office phone, or cell phone. Emergency alarms are readily available at locations within the GWTP Building. Personnel entering the GWTP Building will be notified of the locations and use of emergency alarm buttons, which will initiate an emergency shutdown of the GWTP and issue an alarm to offsite and emergency personnel.

This page intentionally left blank.

8.0 EMERGENCY RESPONSE

This section defines the emergency action plan for the site. It will be rehearsed with all personnel regularly performing project work, including maintenance subcontractors, and will be reviewed with delivery workers and/or visitors upon their initial visit to the work area, and whenever the plan is modified or the SS or SSO believe that field personnel are unclear about the appropriate emergency actions.

After every emergency is resolved, the entire project team will meet and debrief on the incident—the purpose is not to fix blame, but to improve the planning and response to future emergencies. The debriefing will review the sequence of events, what was done well, and what can be improved. The debriefing will be documented in a written format and communicated to the PHSO. Modifications to the emergency plan will be approved by the PHSO.

Reasonably foreseeable emergency situations include medical emergencies, accidental release of hazardous materials (such as potassium permanganate, lime slurry, or sulfuric acid) or hazardous waste, and general emergencies such as fire, thunderstorm, flooding, and earthquake. It is important that each person present understands his or her role in an emergency, and that s/he remains calm and acts efficiently to ensure everyone's safety. Expected actions for each potential incident are outlined below.

8.1 EMERGENCY EVACUATION

In the event of an emergency that requires evacuation of the GWTP Building, workers inside the building must immediately exit the building through the nearest building exit. One exit is located on each end of the building, as shown on Figure 1. Upon exiting the building, workers shall go to the muster point as shown on Figure 1. This muster point is located west of the building, and should be clear from expected hazards. This location also provides alternate pathways to leave the site, should it be necessary.

This muster point will be communicated to the field personnel and visitors. Hazardous materials and contaminated groundwater are generally present in the GWTP Building, which provides effective containment. Building ventilation exhausts from the roof of the building. In an emergency, all field personnel and visitors will evacuate to the muster point for roll call. The SSO will confirm that all personnel working at the site have evacuated the building and will direct site personnel to take specific actions, such as calling 911 or taking steps to minimize or mitigate dangers.

8.2 MEDICAL EMERGENCIES

In the event of a medical emergency, the following procedures should be used.

1. Stop any imminent hazard if you can safely do it.

2. Remove ill, injured, or exposed person(s) from immediate danger if moving them will clearly not cause them harm, and no hazards exist to the rescuers.

3. Evacuate other personnel present to a safe place in an upwind or cross-wind direction until it is safe for work to resume.

4. If serious injury or life-threatening condition exists, call:

   911 – for paramedics, fire department, police

   Clearly describe the location, injury, and conditions to the dispatcher. Designate a person to go to the site entrance and direct emergency equipment to the injured person(s). Provide the responders with a copy of this health and safety plan, to alert them to chemicals of potential concern.

5. Trained personnel may provide first aid/cardiopulmonary resuscitation if it is necessary and safe to do so. Remove contaminated clothing and PPE only if this can be done without endangering the injured person. Use universal precautions and required PPE (latex or nitrile gloves, barrier mask) if bodily fluid exposure is possible to prevent exposure to pathogens.

6. Call the PHSO and/or PM.

7. Immediately implement steps to prevent recurrence of the accident.

A map showing the nearest hospital location is shown at the end of this section, in Figure 3. The address and contact information for the nearest hospital is shown below:

Tacoma General Hospital
315 Martin Luther King Jr. Way
Tacoma, WA 98405-4234
(253) 403-1000

Telephone number of nearest Poison Control Center: (800) 222-1222

8.3 ACCIDENTAL RELEASE OF HAZARDOUS MATERIALS OR WASTES

Accidental releases of hazardous materials, contaminated groundwater, or wastes may occur to contained areas or to the environment. Containment systems are in place for areas and operations with the potential to have accidental releases; containment systems are designed to prevent the release from reaching the environment outside the building or containment area. Releases to secondary containment systems present a potential hazard to the site worker but do not present a hazard to the environment, provided that the release is properly addressed by site workers. Releases to areas outside containment systems represent hazards to site workers, the general public, and to the environment.

In the event of personnel exposure to the hazardous process chemicals, including sulfuric acid, lime slurry, or potassium permanganate solution, the affected worker should immediately proceed to the safety shower and eye wash fountain and flush the affected area with water. Activation of the eye wash fountain or safety shower will automatically initiate a safe shutdown of the GWTP and issue an alarm to offsite personnel. Off site personnel will immediately report the incident to emergency response services.

Secondary containment is provided for the areas inside the building where contaminated groundwater or process chemicals are processed or stored. Containment is also provided for the delivery pad and hose connector (Environbox) used to receive bulk shipments of lime slurry. The lime slurry delivery pad provides capability to contain minor spills that may occur during lime slurry deliveries. Releases to secondary containment areas are to be addressed in accordance with the O&M Procedures.

In the event of accidental release of hazardous materials to areas outside the GWTP Building and/or the lime slurry delivery pad, the following procedures must be followed.

1. Evacuate all personnel to a safe place in an upwind direction until the PHSO determines that it is safe for work to resume.

2. Contact the Tacoma Fire Department (911) and inform them of a hazardous material release.

3. Contact the Washington State Emergency Management Division (800) 258-5990 AND the National Response Center (800) 424-8802 in accordance with the procedures for spill response and reporting, as described in the O&M Procedures.

4. Contact or designate a person to contact the PHSO and PM and confirm a response from the PHSO or PM.

5. Contain spill in accordance with the applicable MSDS, if it is possible and if it can be done safely.

6. Initiate cleanup in accordance with the MSDS and using personnel trained in responding to the material that was released.

8.4 GENERAL EMERGENCIES

The following procedures should be followed for general emergencies.

- In the event of a general process failure, the onsite operator can initiate an emergency, safe shutdown of the GWTP using any of the three emergency shutdown switches. An emergency shutdown switch is located near each of the two man doors to the building and one near the safety shower. After activating an emergency shutdown switch, the onsite operator must report the reason to offsite operations personnel and local emergency authorities, as appropriate based on the nature of the emergency shutdown.

- In the case of fire, severe flooding, explosion, earthquake, or other imminent hazard, GWTP operations shall be halted using the emergency shutdown buttons and hazardous materials shall be secured. Site personnel will be immediately evacuated to a safe place. The local police/ fire department shall be notified by calling 911 if the emergency poses a hazard to the community or environment.

- During the incipient phase of a fire, the available fire extinguisher(s) may be used by persons trained in putting out fires, if it is safe for them to do so. The sprinkler system is expected to extinguish significant fires.

- In the event of a thunderstorm, outdoor work will be discontinued until the threat of lightning has abated.

- In the event of a strong earthquake, the work area will be evacuated and secured, and personnel will quickly mobilize to high ground until it is clear that no seiche (inland tsunami) is expected.

8.5 EMERGENCY COMMUNICATIONS

The GWTP is equipped with an autodialer that will issue telephone calls to offsite personnel in the event of emergency conditions detected by process instruments, building instruments, or the emergency shutdown switches. The building smoke alarm and fire alarm systems will issue a local alarm and will alarm local emergency response services if a fire or smoke is detected in the building. Telephone service is also available from the building office that can be used in the event of an emergency.

8.6 EMERGENCY EQUIPMENT

The following minimum emergency equipment will be readily available in the work area and functional at all times:

- First Aid Kit—Contents approved by the PHSO, including two blood borne pathogen barriers;
- A safety shower and eye wash fountain for use if chemical exposure occurs;
- Fire extinguishers and automatic sprinkler system;
- Emergency shutdown buttons (three, one at each man door and one at the safety shower) to shut down the GWTP and issue an offsite alarm;
- Fire alarms and smoke detectors;
- Emergency lighting and exit signs;
- Spill response materials in accordance with the MSDS for the hazardous materials stored onsite
- Spare PPE suitable for working with the hazardous materials present in the GWTP Building; and
- A copy of the current site-specific HASP Appendix.

This page intentionally left blank.

9.0 APPROVALS

Project Manager	Date
Project Health & Safety Officer	Date
Site Safety Officer	Date

This page intentionally left blank.

FIGURES

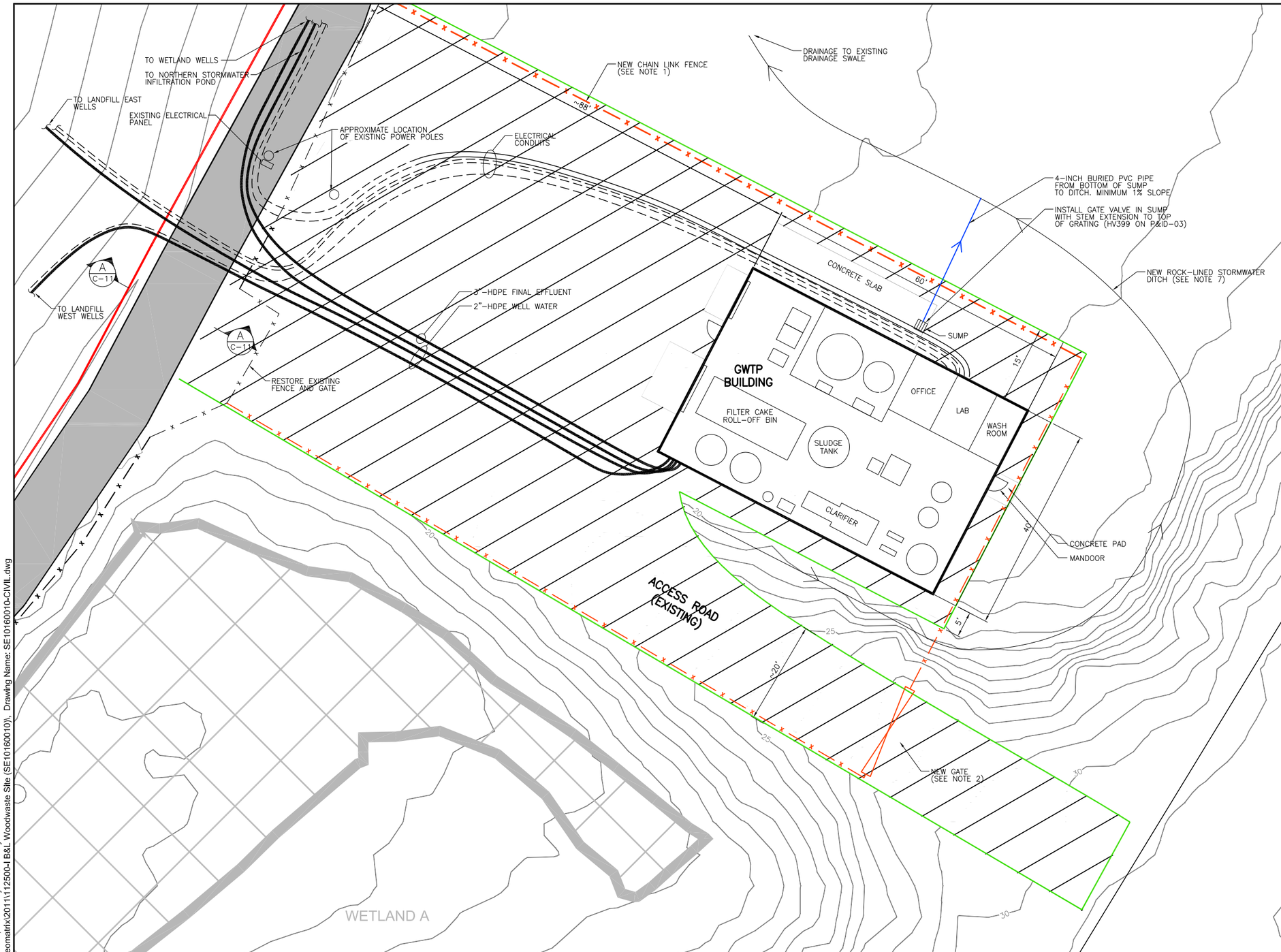

LEGEND:

- TAX PARCEL LINE
- EXISTING FENCE LINE
- WETLAND
- STORMWATER COLLECTION DITCH (EXISTING)
- STABILIZE AREA WITH CRUSHED ROCK
- PERIMETER ROAD (EXISTING)
- HDPE PIPE
- ELECTRICAL CONDUITS
- NEW FENCE LINE
- NEW DRAIN PIPE

NOTES:

1. NEW FENCE TO MATCH EXISTING.
2. SWINGING CHAIN LINK GATE, FULL WIDTH OF ACCESS ROAD, C/W LOCKING HARDWARE. HEIGHT TO MATCH EXISTING FENCE.
3. HATCHED AREA WILL BE USED AS ACCESS ROAD AND PARKING AREA AROUND BUILDING. SUPPLY AND PLACE 6-INCH THICK, UNIFORM LAYER OF CRUSHED SURFACING MATERIAL MEETING WSDOT 9-03.9(3) "CRUSHED SURFACING - TOP COURSE" WITHIN THE AREA INDICATED. SHAPE CRUSHED SURFACING TO REQUIRED CROWN ELEVATIONS AND CROSS-SLOPE GRADES TO PROMOTE POSITIVE DRAINAGE AWAY FROM BUILDING AREA (GENERALLY TO THE NORTH).
4. PIPING, CONDUIT, TRENCH, AND BACKFILL UNDER EXISING PERIMETER ROAD, ACCESS ROAD AND GRAVEL AREA AROUND BUILDING SHALL BE SUITABLE FOR HEAVY TRUCK TRAFFIC.
5. PIPING AND CONDUIT IS SHOWN TO ILLUSTRATE CONCEPT ONLY. FINAL SPACING AND LOCATION SHALL BE DETERMINED BY CONTRACTOR.
6. RAMMED AGGREGATE PIER FOUNDATIONS WILL BE CONSTRUCTED BY OTHERS TO STABILIZE SOIL BENEATH BUILDING. FINAL BUILDING SIZE, LOCATION, LAYOUT MUST BE SUITABLE FOR LOCATION OF THOSE EXISTING PIERS.
7. EXCAVATE DRAINAGE DITCH AT THE APPROXIMATE LOCATION INDICATED. SLOPE DITCH INVERT SUCH THAT POSITIVE DRAINAGE IS MAINTAINED IN THE DIRECTION SHOWN WITH DISCHARGE POINT LOCATED AS SHOWN. LINE DITCH WITH 2- TO 4-INCH DIAMETER QUARRY SPALLS TO ARMOR DITCH SIDEWALLS.
8. CONTRACTOR TO PROVIDE ADDITIONAL FILL TO COMPENSATE FOR MAXIMUM 6 INCHES OF SETTLEMENT IN HATCHED AREA OUTSIDE OF BUILDING, BEFORE PLACING CRUSHED ROCK SURFACING. UTILIZE RECOVERED FILL FROM EXCAVATION ACTIVITIES FOR BUILDING FOUNDATION ETC WHERE POSSIBLE. PROVIDE IMPORTED MATERIAL TO MATCH EXISTING FILL (WSDOT 9-03.14(2) "SELECT BORROW") WHERE NECESSARY.
9. WHERE NATIVE SOIL IS LESS THAN 2 FT BELOW ANY SUMPS, FOOTINGS, OR OTHER NEW STRUCTURES, OVER EXCAVATE BY A MINIMUM OF 2 FEET AND PLACE AND COMPACT FILL IN SUITABLE LIFTS. FILL MATERIAL SHALL MEET WSDOT 9-03.14(2) "SELECT BORROW". UTILIZE RECOVERED FILL FROM EXCAVATION WHERE POSSIBLE.
10. PROVIDE SUITABLE YARD LIGHTING ABOVE EACH BUILDING DOOR AND FOR PARKING AREA WEST OF BUILDING.
11. TIE BUILDING ROOF GUTTERS AND DOWNSPOUTS INTO NEW STORMWATER DRAINAGE DITCH.

SCALE BAR (1" = 20'-0")

0 20'-0" 40'-0" 60'-0"

PRELIMINARY

REFERENCES:
PLANS

DATUM
HORIZONTAL: WASP-NAD83-S FEET
VERTICAL: NAVD88 FEET

NO.	REVISION	DATE	APRVD
1	ISSUED FOR PERMIT	FEB 25	WJM
2	ISSUED FOR PLANS AND SPECIFICATIONS	APR 8	WJM
3	ISSUED FOR TENDER	MAY 26	WJM
4	ISSUED FOR FINAL ENGINEERING DESIGN	JLY 26	LDV

DRAWN JR
DESIGNED ES
CHECKED GP
REVIEWED WJM/LMM

AMEC Geomatrix

LARRY M. McGAUGHEY STATE OF WASHINGTON 30623 REGISTERED PROFESSIONAL ENGINEER

GROUNDWATER TREATMENT PLANT
PARTIAL SITE PLAN

B&L WOODWASTE SITE
PIERCE COUNTY, WASHINGTON

DATE: 07/27/11
PROJECT NO.: SE10160010

DRAWING
C-03

Plot Date: 07/27/11 - 8:24am, Plotted by: Dell Survey2
Drawing Path: T:\Pete\Geomatrix\2011\12500-I B&L Woodwaste Site (SE10160010)\, Drawing Name: SE10160010-CIVIL.dwg

EAL 05/25/07 1733009-AJ.cdr

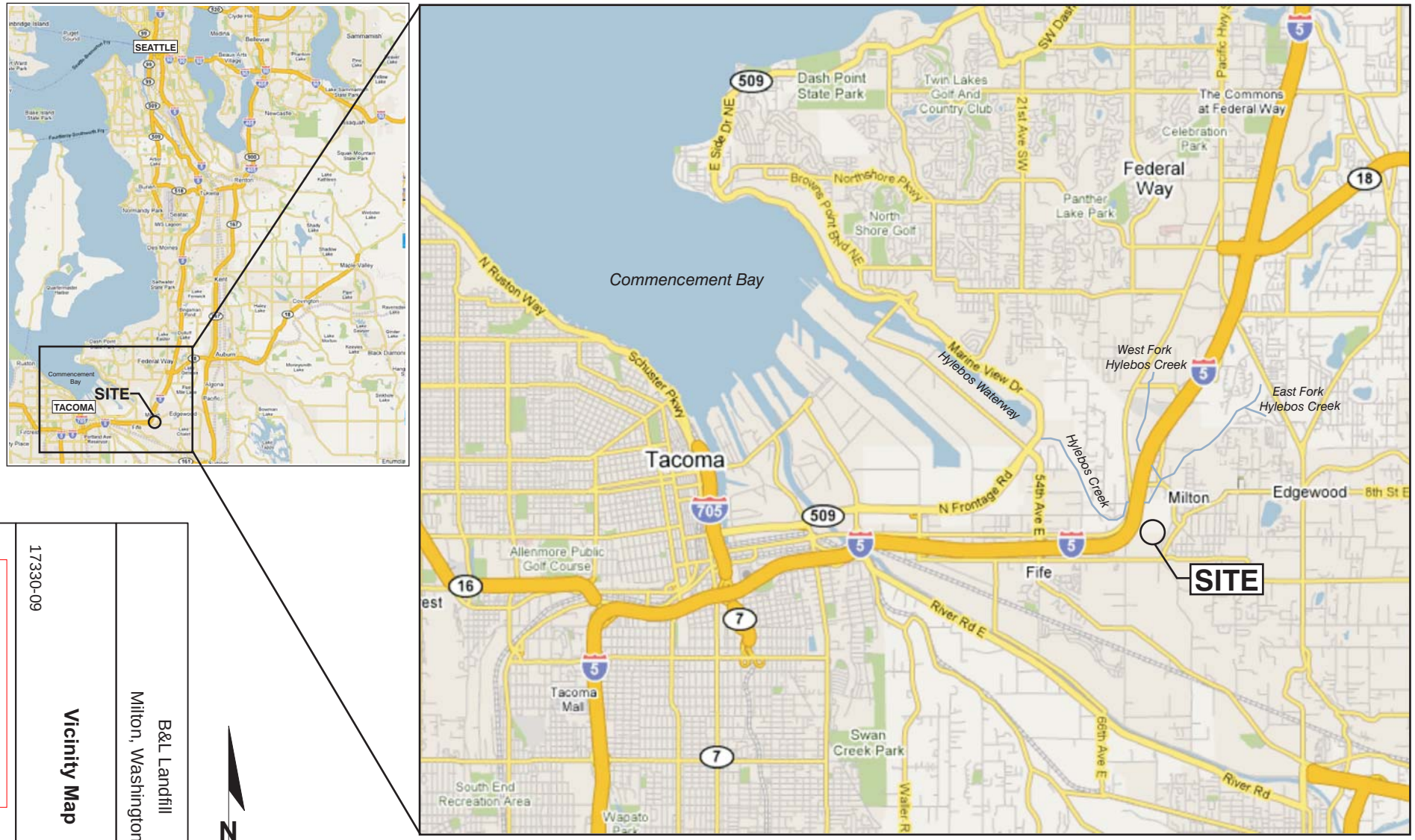

B&L Landfill
Milton, Washington

Vicinity Map

17330-09

5/07

Figure 1

Note: Figure based on drawing from Groundwater Alternatives Evaluation Report, prepared by Floyd/Snider, January 2007.

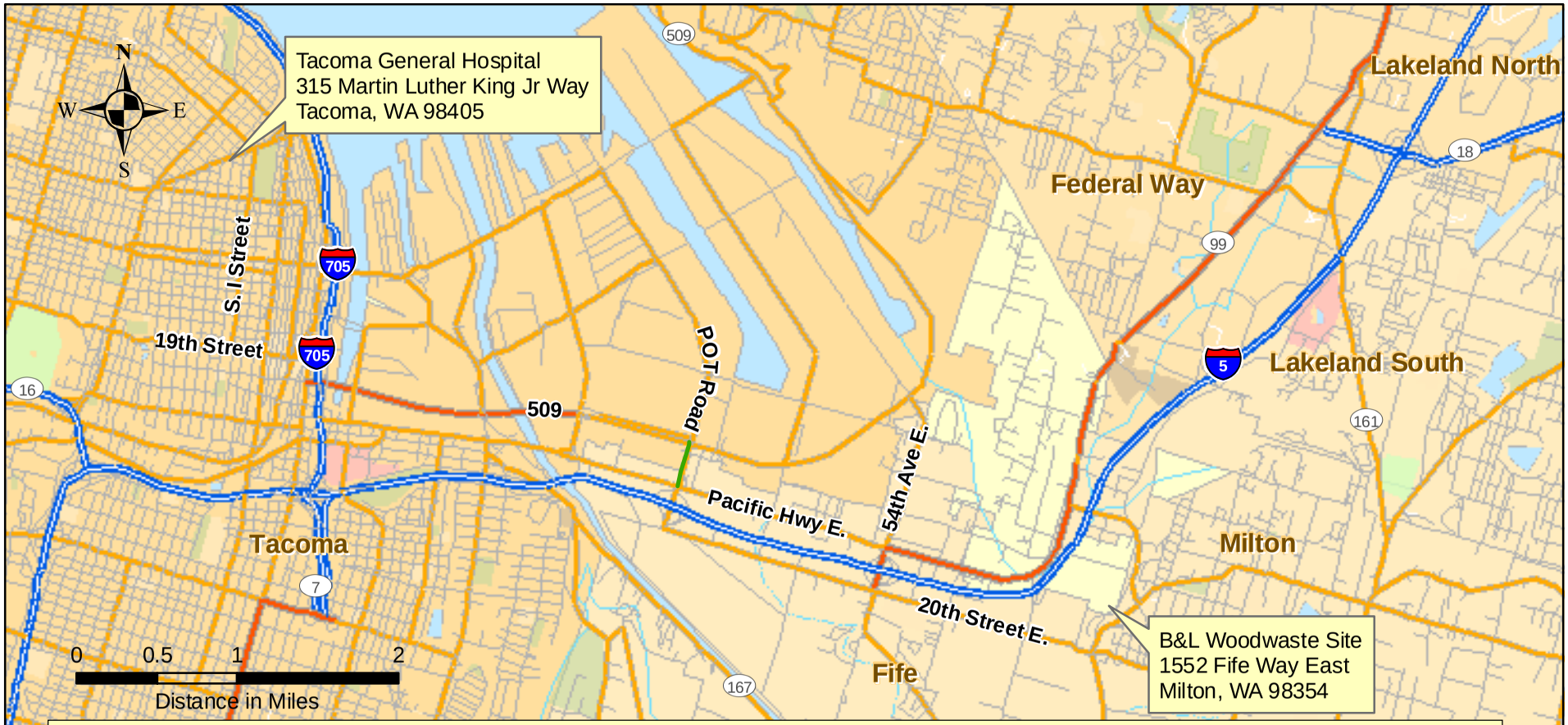

Directions to Hospital from B&L Woodwaste Site:

1. Depart B&L Woodwaste Site
2: Go East on 6th Ave toward Fife Way < 0.1 mile(s) < 1 minute
3: Make sharp right on Fife Way 0.2 mile(s) < 1 minute
4: Bear right on Milton Way < 0.1 mile(s) < 1 minute
5: Turn right on Yuma St (20th St E) < 0.1 mile(s) < 1 minute
6: Bear right on 20th St E 1.3 mile(s) 2 minute(s)
7: Turn right on 54th Ave E 0.3 mile(s) < 1 minute
8: Turn left on STHY 99 (Pacific Hwy E) 1.3 mile(s) 2 minute(s)
9: Turn right on Port Of Tacoma Rd 0.3 mile(s) < 1 minute
10: Turn left on S Frontage Rd (STHY 509) 0.6 mile(s) < 1 minute
11: Continue on STHY 509 1.8 mile(s) 1 minute(s)
12: Turn right on Pacific Ave 0.1 mile(s) < 1 minute
13: Turn left on S 19th St 0.5 mile(s) < 1 minute
14: Turn right on S I St 1.2 mile(s) 1 minute(s)
15: Turn left on S 3rd St 0.1 mile(s) < 1 minute
16: Turn right on Martin Luther King Jr Way (S K St) < 0.1 mile(s) < 1 minute
17: Arrive at Tacoma General Hospital.

FLOYD | SNIDER
strategy • science • engineering
AMEC Geomatrix

B&L Woodwaste Site
Pierce County, Washington

Figure 1H.1
Route to Hospital Map

File: F:\projects\B&L RIM\GIS\MXD\Figure 1H.1 (Streetmap USA Route to Hospital Map).mxd
6/5/2009 11:02 AM

ATTACHMENT 1

Project Health & Safety Field Meeting Form

PROJECT HEALTH AND SAFETY MEETING FORM

Date:_____ Time: _____ Project No.: 13488_____

Project Name: B&L Woodwaste Site Groundwater Treatment

Location: 1522 Fife Way East, Milton, WA

Meeting Conducted by: _____

Topics Discussed:
Physical Hazards: _____

Chemical Hazards: _____

Personal Protection: _____

Decontamination: _____

Other:_____

_____

_____

_____

_____

Emergency Information: Tacoma General Hospital 315 Martin Luther King Jr. Way
Tacoma, WA 98405-4234

Attendees

Name/Company (printed)	Signature

Meeting Conducted by: _____

Signature

ATTACHMENT 2

Material Data Safety Sheets

AMEC Geomatrix
600 University Street, Suite 1020 Seattle, WA 98101

FLOYD | SNIDER
strategy ▪ science ▪ engineering
601 Union Street, Suite 600 Seattle, WA 98101

Memorandum

To: Kyle Hansen, Floyd|Snider

Copies: Brett Beaulieu, Floyd|Snider

From: Larry McGaughey

Date: September 30, 2011

Re: **Laboratory Testing and Reagent Overview, B&L Woodwaste Site Phase 2 Remediation**

The laboratory included in the groundwater treatment building will be used solely for supporting operations of the groundwater treatment system. Testing will include pH measurement, oxidation/reduction potential (ORP) measurement, field testing for arsenic, iron, and manganese in groundwater, and for performing settling tests of groundwater to support operations of the process clarifier. Other operations to be conducted in the laboratory include washing of laboratory glassware and other items (such as instrument electrodes) associated with the treatment process. The laboratory will also be used for handling and packaging samples collected for compliance with the NPDES permit for the treated water discharge and for samples to be sent to a commercial laboratory for testing beyond the capabilities of the plant laboratory.

Testing of pH and ORP will be done using conventional electrochemical instruments and electrodes. Samples of groundwater collected from the treatment process, including untreated influent, water from intermediate treatment stages, and treated effluent will be manually collected from the treatment process and brought to the laboratory for testing. Influent groundwater is expected to be near neutral. Process conditions for pH are expected to range from about pH 6.0 to pH 8.5. The pH meter will be calibrated using commercially-available buffer solutions in the range of pH 6 to pH 9. Testing for ORP is expected to be conducted on samples of untreated influent and water discharged from the oxidation tank. Electrodes will be rinsed with either potable tap water or commercially-available deionized water. Samples of groundwater collected for pH or ORP testing will be dumped to the oxidation tank. Rinse water and used calibration solutions will be dumped to the sink drain.

Testing for arsenic, iron, and manganese will be performed on samples of untreated groundwater, groundwater from intermediate treatment stages, and treated effluent. Testing will be conducted using Hach test kits and a Hach spectrophotometer. These test kits require mixing of packets of test chemicals into a measured aliquot of test water, allowing adequate reaction time, and reading the result either using a test strip or the spectrophotometer. Excess water sample will be returned to the oxidation tank in the groundwater treatment system for treatment. Solutions containing test reagent will be placed in a plastic container stored on the floor of the laboratory for periodic offsite disposal by a properly permitted disposal firm. Reagent packaging will also be placed in a plastic container for periodic offsite disposal by a

properly permitted disposal firm. As operation of the groundwater treatment system has not yet commenced, no disposal contracts have been established. Glassware used for testing will be washed in the laboratory sink with potable water using a laboratory detergent such as Alconox®. Glassware will be rinsed in the sink using potable water and commercially available deionized water. Material Safety Data Sheets (MSDS) for the Hach test kits and Alconox are attached.

Testing will also be conducted as needed to assess coagulants/flocculants for the treatment process. This testing would be conducted on intermediate process samples collected from the co-precipitation tank. Commercially-available coagulants and flocculants used commonly in water and wastewater treatment plants would be tested for this purpose. Testing would consist of preparing coagulant/flocculant feed from the commercial product and tap water followed by dosing the test samples at different concentrations, mixing the test solutions, and observing results. Settling tests using graduated cylinders or other glassware may also be conducted to assess settling properties. Excess samples and test solutions will be returned to the groundwater treatment process. Glassware used for testing will be washed and rinsed in the laboratory sink. Excess coagulant or flocculant product will be disposed offsite by a permitted commercial disposal firm.

Reagents and laboratory materials used in the laboratory will be limited to those needed the testing described above. These will include the following:

- Hach Ferrous Iron Reagent:
  - Phenanthroline
  - Sodium Bicarbonate
- Hach High Range Arsenic Test Kit
  - Arsenic Test Strips
    - Mercuric Bromide Saturated Paper
  - EZ Arsenic Reagent #1
    - Sulfamic Acid
  - Lead Acetate, 10%
    - Acetic Acid
    - Demineralized water
    - Lead Acetate
  - EZ Arsenic Reagent #2
    - Zinc
- Hach Low Range Arsenic Test Kit
  - Arsenic Test Strips
    - Mercuric Bromide Saturated Paper
  - Arsenic Reagent #1
    - Dibasic Sodium Phosphate
  - Arsenic Reagent #2
    - Potassium peroxymonosulfate sulfate

    - Arsenic Reagent #3
        - Ethylenediaminetetracetic acid, disodium salt
        - Ethylenediaminetetracetic acid, tetrasodium salt
    - Arsenic Reagent #4
        - Sulfamic Acid
    - Arsenic Reagent #5
        - Zinc
- Hach Manganese Reagent
    - Buffer Powder Citrate Type
        - Citric Acid
        - Sodium phosphate, monobasic
        - Sodium Sulfate
    - Sodium m-Periodate
- Buffer Solutions, pH 6.0, 7.2, and 8.0
    - Potassium phosphate/sodium hydroxide solutions

Commercially available polymers or polyelectrolytes used in the water and wastewater treatment industry may also be used in performing jar tests to assess their effectiveness in separating solid precipitates from groundwater. No other reagents are anticipated for use at the site. If other reagents or lab materials, such as buffer solutions for different pH or ORP calibration standards are to be used, they will be disposed in accordance with manufacturer recommendations via placement in a plastic container and periodic offsite disposal using a permitted commercial disposal service.

The Hach reagents listed above will be received and stored in small, sealed plastic packets or sealed glass ampules. Hach test strips will be received and stored in either a box or jar. The buffers listed above for calibrating the pH meters will be received either in sealed packets containing powder or in sealed plastic bottles. All reagents will be stored as-received in a closed storage cabinet located across the room from the laboratory sink. Storage will be conducted in accordance with supplier instructions and the MSDS information. Incompatible reagents and/or materials will be kept separated, in accordance with supplier recommendations and the MSDS information. Reagents removed from the chemical storage cabinet for use will be returned after use. Cabinets located in the immediate vicinity of the sink will be used only for storage of glassware, plastic ware, or water containers. Detergent used for washing glassware will be stored in the chemical storage cabinet; a small amount of detergent will be placed in a bottle or jar near the sink for routine use.

Sincerely yours,

FLOYD | SNIDER
AMEC Geomatrix

Larry McGaughey, Ph.D., P.E.
Project Manager

Encl.: MSDS Sheets:

- Arsenic Test Strips
- EZ Arsenic Reagent #1
- EZ Arsenic Reagent #2
- Lead Acetate, 10%
- Arsenic Reagent #1
- Arsenic Reagent #2
- Arsenic Reagent #3
- Arsenic Reagent #4
- Arsenic Reagent #5
- Ferrous Iron Reagent
- Buffer Powder Citrate Type
- Sodium Periodate
- FerroVer Iron Reagent
- FerroVer Iron Reagent
- Alconox

World Headquarters
Hach Company
P.O.Box 389
Loveland, CO USA 80539
(970) 669-3050

MSDS No: M01892

MATERIAL SAFETY DATA SHEET

1. CHEMICAL PRODUCT AND COMPANY IDENTIFICATION

Product Name: Arsenic Test Strips
Catalog Number: 2800150

Hach Company
P.O.Box 389
Loveland, CO USA 80539
(970) 669-3050

Emergency Telephone Numbers:
(Medical and Transportation)
(303) 623-5716 24 Hour Service
(515)232-2533 8am - 4pm CST

MSDS Number: M01892
Chemical Name: Not applicable
CAS No.: Not applicable
Chemical Formula: Not applicable
Chemical Family: Not applicable
Hazard: Highly toxic. Experimental carcinogen. Cumulative poison. Harmful if absorbed through skin. Harmful if swallowed
Date of MSDS Preparation:
Day: 25
Month: August
Year: 2007

2. COMPOSITION / INFORMATION ON INGREDIENTS

Mercuric Bromide Saturated Paper
CAS No.: Not applicable
TSCA CAS Number: Not applicable
Percent Range: 100.0
Percent Range Units: weight / weight
LD50: None reported
LC50: None reported
TLV: Not established
PEL: Not established
Hazard: Highly toxic. Experimental carcinogen. Cumulative poison. Harmful if absorbed through skin. Harmful if swallowed

3. HAZARDS IDENTIFICATION

Emergency Overview:
Appearance: White paper
Odor: None
HARMFUL IF SWALLOWED OR ABSORBED THROUGH SKIN
POSSIBLE BIRTH DEFECT HAZARD: MAY CAUSE BIRTH DEFECTS BASED ON ANIMAL DATA CAN CAUSE LUNG AND KIDNEY DISEASE

HMIS:

Health: 4
Flammability: 0
Reactivity: 0
Protective Equipment: X - See protective equipment, Section 8.

NFPA:
Health: 4
Flammability: 0
Reactivity: 0
Symbol: Not applicable

Potential Health Effects:
Eye Contact: May cause irritiation
Skin Contact: May cause irritiation
Skin Absorption: Will be absorbed through the skin. Effects similar to those of ingestion
Target Organs: Central nervous system Liver Kidneys
Ingestion: Highly toxic. Causes: abdominal pain nausea vomiting diarrhea metallic taste rapid pulse and respirations weakness May cause: inflammation of the mouth increased urinary output excessive salivation liver damage kidney damage central nervous system effects collapse death
Target Organs: Central nervous system Liver Kidneys
Inhalation: Toxic. May cause: Effects similar to those of ingestion.
Target Organs: Central nervous system Kidneys Liver
Medical Conditions Aggravated: Allergies or sensitivity to mercury. Central nervous system diseases Kidney conditions Liver conditions Pre-existing: Eye conditions Skin conditions Respiratory conditions
Chronic Effects: Mercury can cause personality changes such as: depression, despondency, fearfulness, restlessness, irritability, timidness, indecision and embarrassment. Mercury is a general protoplasmic poison; it circulates in the blood and is stored in the liver, kidneys, spleen and bones. Main symptoms are sore mouth, tremors and psychic disturbances.
Cancer / Reproductive Toxicity Information:
This product does NOT contain any OSHA listed carcinogens.

IARC Group 3: Non-classifiable
Mercury and Inorganic Mercury compounds
This product does NOT contain any NTP listed chemicals.

Additional Cancer / Reproductive Toxicity Information: an experimental teratogen. an experimental mutagen.

Toxicologically Synergistic Products: None reported

4. FIRST AID

Eye Contact: Flush eyes with water. Call physician if irritation develops.
Skin Contact (First Aid): Wash skin with plenty of water. Call physician if irritation develops.
Ingestion (First Aid): Give large quantities of water or milk. Induce vomiting using syrup of ipecac or by sticking finger down throat. Call physician immediately. Never give anything by mouth to an unconscious person.
Inhalation: None required.

5. FIRE FIGHTING MEASURES

Flammable Properties: Can burn in fire, releasing toxic vapors.
Flash Point: Not determined
Method: Not applicable
Flammability Limits:
Lower Explosion Limits: Not applicable
Upper Explosion Limits: Not applicable
Autoignition Temperature: Not determined

Hazardous Combustion Products: May vaporize to form Mercury vapor. bromides
Fire / Explosion Hazards: Reacts with sodium aci-nitromethanide and acid to form explosive mercury fulminate.
Static Discharge: None reported.
Mechanical Impact: None reported
Extinguishing Media: Use media appropriate to surrounding fire conditions
Fire Fighting Instruction: As in any fire, wear self-contained breathing apparatus pressure-demand and full protective gear. Water runoff can cause environmental damage. Dike and collect water used to fight fire.

6. ACCIDENTAL RELEASE MEASURES

Spill Response Notice:
Only persons properly qualified to respond to an emergency involving hazardous substances may respond to a spill according to federal regulations (OSHA 29 CFR 1910.120(a)(v)) and per your company's emergency response plan and guidelines/procedures. See Section 13, Special Instructions for disposal assistance.
Containment Technique: Releases of this material may contaminate the environment. Stop spilled material from being released to the environment.
Clean-up Technique: Sweep up material. Dispose of all mercury contaminated material at an E.P.A. hazardous waste facility. Decontaminate the area of the spill with a soap solution.
Evacuation Procedure: Evacuate as needed to perform spill clean-up. If conditions warrant, increase the size of the evacuation.
Special Instructions (for accidental release): Product is regulated as a hazardous air pollutant. Product is regulated as RCRA hazardous waste.
304 EHS RQ (40 CFR 355): Mercuric Bromide - RQ 1 lb.
D.O.T. Emergency Response Guide Number: 154

7. HANDLING / STORAGE

Handling: Avoid contact with skin eyes clothing Do not breathe dust. Use with adequate ventilation. Wash thoroughly after handling. Maintain general industrial hygiene practices when using this product.
Storage: Keep container tightly closed when not in use.
Flammability Class: Not applicable

8. EXPOSURE CONTROLS / PROTECTIVE EQUIPMENT

Engineering Controls: Maintain adequate ventilation to keep vapor level below TWA for chemicals in this product. Maintain general industrial hygiene practices when using this product.
Personal Protective Equipment:
Eye Protection: safety glasses with top and side shields
Skin Protection: disposable latex gloves lab coat
Inhalation Protection: adequate ventilation
Precautionary Measures: Avoid contact with: eyes skin clothing Do not breathe: dust Use with adequate ventilation. Wash thoroughly after handling.
TLV: Not established
PEL: Not established

9. PHYSICAL / CHEMICAL PROPERTIES

Appearance: White paper
Physical State: Solid
Molecular Weight: Not applicable
Odor: None
pH: Not applicable
Vapor Pressure: Not applicable

Vapor Density (air = 1): Not applicable
Boiling Point: Not applicable
Melting Point: Not applicable
Specific Gravity (water = 1): Not applicable
Evaporation Rate (water = 1): Not applicable
Volatile Organic Compounds Content: Not applicable
Partition Coefficient (n-octanol / water): Not applicable
Solubility:
Water: Not applicable
Acid: Not applicable
Other: Not applicable
Metal Corrosivity:
Steel: Not applicable
Aluminum: Not applicable

10. STABILITY / REACTIVITY

Chemical Stability: Stable when stored under proper conditions.
Conditions to Avoid: Heating to decomposition.
Reactivity / Incompatibility: Incompatible with: formates sulfites phosphates arsenic boron compounds carbonates iron copper silver salts
Hazardous Decomposition: Heating to decomposition releases: mercury bromides
Hazardous Polymerization: Will not occur.

11. TOXICOLOGICAL INFORMATION

Product Toxicological Data:
LD50: None reported
LC50: None reported
Dermal Toxicity Data: None reported
Skin and Eye Irritation Data: None reported
Mutation Data: None reported
Reproductive Effects Data: None reported
Ingredient Toxicological Data: Mercuric Bromide: Oral rat LD50 = 40 mg/kg, Dermal rat LD50 = 100 mg/kg

12. ECOLOGICAL INFORMATION

Product Ecological Information: --
No ecological data available for this product.
Ingredient Ecological Information: Mercury and mercury compounds: Calculated Bioconcentration factor > 100. LC50/96H fish <1 mg/L

13. DISPOSAL CONSIDERATIONS

EPA Waste ID Number: D009
Special Instructions (Disposal): Dispose of all mercury contaminated material at an E.P.A. hazardous waste facility.
Empty Containers: Rinse three times with an appropriate solvent. Rinsate from empty containers is hazardous waste and should be disposed of at an E.P.A. approved facility. Dispose of empty container as normal trash.

NOTICE (Disposal): These disposal guidelines are based on federal regulations and may be superseded by more stringent state or local requirements. Please consult your local environmental regulators for more information.

14. TRANSPORT INFORMATION

D.O.T.:
D.O.T. Proper Shipping Name: Mercury Bromides Mixture
--
DOT Hazard Class: 6.1
DOT Subsidiary Risk: NA
DOT ID Number: UN1634
DOT Packing Group: II
I.C.A.O.:
I.C.A.O. Proper Shipping Name: Mercury Bromides Mixture
--
ICAO Hazard Class: 6.1
ICAO Subsidiary Risk: NA
ICAO ID Number: UN1634
ICAO Packing Group: II
I.M.O.:
I.M.O. Proper Shipping Name: Mercury Bromides Mixture
--
I.M.O. Hazard Class: 6.1
I.M.O. Subsidiary Risk: NA
I.M.O. ID Number: UN1634
I.M.O. Packing Group: II
Additional Information: There is a possibility that this product could be contained in a reagent set or kit composed of various compatible dangerous goods. If the item is NOT in a set or kit, the classification given above applies. If the item IS part of a set or kit, the classification would change to the following: UN3316 Chemical Kit, Class 9, PG II or III. If the item is not regulated, the Chemical Kit classification does not apply.

15. REGULATORY INFORMATION

U.S. Federal Regulations:
O.S.H.A.: This product meets the criteria for a hazardous substance as defined in the Hazard Communication Standard. (29 CFR 1910.1200)
E.P.A.:
S.A.R.A. Title III Section 311/312 Categorization (40 CFR 370): Immediate (Acute) Health Hazard Delayed (Chronic) Health Hazard
S.A.R.A. Title III Section 313 (40 CFR 372): This product contains a chemical(s) subject to the reporting requirements of Section 313 of Title III of SARA.
Mercury Compounds
302 (EHS) TPQ (40 CFR 355): 500 lbs. Mercury Bromide
304 CERCLA RQ (40 CFR 302.4): Not applicable
304 EHS RQ (40 CFR 355): Mercuric Bromide - RQ 1 lb.
Clean Water Act (40 CFR 116.4): Not applicable
RCRA: Contains RCRA regulated substances. See Section 13, EPA Waste ID Number.
C.P.S.C.: Not applicable
State Regulations:
California Prop. 65: WARNING - This product contains a chemical known to the State of California to cause birth defects or other reproductive harm.
Identification of Prop. 65 Ingredient(s): Mercury Compounds
California Perchlorate Rule CCR Title 22 Chap 33:
Trade Secret Registry: Not applicable

National Inventories:

U.S. Inventory Status: All ingredients in this product are listed on the TSCA 8(b) Inventory (40 CFR 710).

TSCA CAS Number: Not applicable

16. OTHER INFORMATION

Intended Use: Laboratory Reagent

References: Air Contaminants, Federal Register, Vol. 54, No. 12. Thursday, January 19, 1989. pp. 2332-2983. TLV's Threshold Limit Values and Biological Exposure Indices for 1992-1993. American Conference of Governmental Industrial Hygienists, 1992. Sax, N. Irving. Dangerous Properties of Industrial Materials, 7th Ed. New York: Van Nostrand Reinhold Co., 1989. Sax, N. Irving and Richard J. Lewis, Sr., revised by. Hawley's Condensed Chemical Dictionary, Eleventh Ed. New York: Van Nostrand Reinhold Co., 1987. The Merck Index, 11th Ed. Rahway, New Jersey: Merck and Co., Inc., 1989. Vendor Information. Gosselin, R. E. et al. Clinical Toxicology of Commercial Products, 5th Ed. Baltimore: The Williams and Wilkins Co., 1984. CCINFO RTECS. Canadian Centre for Occupational Health and Safety. Hamilton, Ontario Canada: 30 June 1993. Technical Judgment.

Revision Summary: Updates in Section(s) 14,

Legend:

NA - Not Applicable	w/w - weight/weight
ND - Not Determined	w/v - weight/volume
NV - Not Available	v/v - volume/volume

USER RESPONSIBILITY: Each user should read and understand this information and incorporate it in individual site safety programs in accordance with applicable hazard communication standards and regulations.

THE INFORMATION CONTAINED HEREIN IS BASED ON DATA CONSIDERED TO BE ACCURATE. HOWEVER, NO WARRANTY IS EXPRESSED OR IMPLIED REGARDING THE ACCURACY OF THESE DATA OR THE RESULTS TO BE OBTAINED FROM THE USE THEREOF.

World Headquarters
Hach Company
P.O.Box 389
Loveland, CO USA 80539
(970) 669-3050

MSDS No: M00007

MATERIAL SAFETY DATA SHEET

1. CHEMICAL PRODUCT AND COMPANY IDENTIFICATION

Product Name: EZ Arsenic Reagent #1
Catalog Number: 2822999

Hach Company
P.O.Box 389
Loveland, CO USA 80539
(970) 669-3050

Emergency Telephone Numbers:
(Medical and Transportation)
(303) 623-5716 24 Hour Service
(515)232-2533 8am - 4pm CST

MSDS Number: M00007
Chemical Name: Sulfamic Acid
CAS No.: 5329-14-6
Chemical Formula: H_3NO_3S
Chemical Family: Inorganic Acid
Hazard: Causes eye burns.
Date of MSDS Preparation:
Day: 25
Month: 06
Year: 2010

2. COMPOSITION / INFORMATION ON INGREDIENTS

Other component
CAS No.: Not applicable
TSCA CAS Number: Not applicable
Percent Range: < 1.0
Percent Range Units: weight / weight
LD50: Not applicable
LC50: Not applicable
TLV: Not established
PEL: Not established
Hazard: Any ingredient(s) of this product listed as "Other component(s)" is not considered a health hazard to the user of this product.

Sulfamic Acid
CAS No.: 5329-14-6
TSCA CAS Number: 5329-14-6
Percent Range: > 99.0
Percent Range Units: weight / weight
LD50: Oral rat LD50 = 3160 mg/kg.
LC50: None reported
TLV: Not established
PEL: Not established
Hazard: Causes eye burns.

3. HAZARDS IDENTIFICATION

Emergency Overview:
Appearance: White crystals

Odor: None
CAUSES EYE BURNS CAUSES SKIN AND RESPIRATORY TRACT IRRITATION

HMIS:
Health: 2
Flammability: 1
Reactivity: 1
Protective Equipment: X - See protective equipment, Section 8.

NFPA:
Health: 2
Flammability: 1
Reactivity: 1
Symbol: Not applicable

Potential Health Effects:
Eye Contact: Causes eye burns.
Skin Contact: Causes severe irritation
Skin Absorption: None reported
Target Organs: None reported
Ingestion: May cause: irritation of the mouth and esophagus gastrointestinal irritation
Target Organs: None reported
Inhalation: May cause: irritation of nose and throat
Target Organs: None reported
Medical Conditions Aggravated: Pre-existing: Eye conditions Skin conditions Respiratory conditions
Chronic Effects: None reported
Cancer / Reproductive Toxicity Information:
O.S.H.A. Listed: No
IARC Listed: No
NTP Listed: No
Additional Cancer / Reproductive Toxicity Information: Not applicable

Toxicologically Synergistic Products: None reported

4. FIRST AID

Eye Contact: Immediately flush eyes with water for 15 minutes. Call physician.
Skin Contact (First Aid): Wash skin with plenty of water for 15 minutes. Call physician immediately.
Ingestion (First Aid): Do not induce vomiting. Give 1-2 glasses of water. Call physician immediately. Never give anything by mouth to an unconscious person.
Inhalation: Remove to fresh air.

5. FIRE FIGHTING MEASURES

Flammable Properties: During a fire, irritating and highly toxic gases may be generated by thermal decomposition.
Flash Point: Not applicable
Method: Not applicable
Flammability Limits:
Lower Explosion Limits: Not applicable
Upper Explosion Limits: Not applicable
Autoignition Temperature: Not applicable
Hazardous Combustion Products: Toxic fumes of: ammonia nitrogen oxides. sulfur oxides.
Fire / Explosion Hazards: May react violently with: chlorine / chlorine compounds metal nitrates metal nitrites nitric acid
Static Discharge: None reported.
Mechanical Impact: None reported
Extinguishing Media: Dry chemical. Water.
Fire Fighting Instruction: As in any fire, wear self-contained breathing apparatus pressure-demand and full protective gear.

6. ACCIDENTAL RELEASE MEASURES

Spill Response Notice:

Only persons properly qualified to respond to an emergency involving hazardous substances may respond to a spill according to federal regulations (OSHA 29 CFR 1910.120(a)(v)) and per your company's emergency response plan and guidelines/procedures. See Section 13, Special Instructions for disposal assistance.
Containment Technique: Stop spilled material from being released to the environment. Cover spilled solid material with sand or other inert material.
Clean-up Technique: Scoop up spilled material into a large beaker and dissolve with water. Adjust to a pH between 6 and 9 with an alkali, such as soda ash or sodium bicarbonate. Flush reacted material to the drain with a large excess of water. Decontaminate the area of the spill with a soap solution.
Evacuation Procedure: Evacuate local area (15 foot radius or as directed by your facility's emergency response plan) when: a pound or more of loose powder is spilled. If conditions warrant, increase the size of the evacuation.
Special Instructions (for accidental release): Product is regulated as RCRA hazardous waste in the U.S.
304 EHS RQ (40 CFR 355): Not applicable
D.O.T. Emergency Response Guide Number: 154

7. HANDLING / STORAGE

Handling: Avoid contact with eyes skin Do not breathe dust. Maintain general industrial hygiene practices when using this product.
Storage: Store away from: oxidizers alkalies chlorine/chlorinated metals Protect from: heat moisture
Flammability Class: Not applicable

8. EXPOSURE CONTROLS / PROTECTIVE EQUIPMENT

Engineering Controls: Have an eyewash station nearby. Maintain general industrial hygiene practices when using this product.
Personal Protective Equipment:
Eye Protection: safety glasses with top and side shields
Skin Protection: disposable latex gloves lab coat
Inhalation Protection: adequate ventilation
Precautionary Measures: Avoid contact with: eyes skin Do not breathe: dust Wash thoroughly after handling. Keep away from: alkalies metals Protect from: heat moisture
TLV: Not established
PEL: Not established

9. PHYSICAL / CHEMICAL PROPERTIES

Appearance: White crystals
Physical State: Solid
Molecular Weight: 97.10
Odor: None
pH: 1% soln = 1.18
Vapor Pressure: Not applicable
Vapor Density (air = 1): Not applicable
Boiling Point: Not applicable
Melting Point: Product decomposes at 205 °C; 401 °F
Specific Gravity/ Relative Density (water = 1; air =1): 2.15
Evaporation Rate (water = 1): Not applicable
Volatile Organic Compounds Content: Not applicable
Partition Coefficient (n-octanol / water): None reported
Solubility:
Water: 1:2 ratio @ 80 ° C (176 °F)
Acid: Soluble
Other: Slightly soluble in alcohol, methanol.
Metal Corrosivity:
Steel: 0.814 in/yr
Aluminum: 0.212 in/yr

10. STABILITY / REACTIVITY

Chemical Stability: Stable when stored under proper conditions.

Conditions to Avoid: Heating to decomposition. Excess moisture
Reactivity / Incompatibility: May react violently in contact with: chlorates metal nitrates metal nitrites nitric acid
Incompatible with: alkalies oxidizers
Hazardous Decomposition: Heating to decomposition releases toxic and/or corrosive fumes of: ammonia nitrogen oxides sulfur oxides
Hazardous Polymerization: Will not occur.

11. TOXICOLOGICAL INFORMATION

Product Toxicological Data:
LD50: Oral rat LD50 = 3160 mg/kg.
LC50: None reported
Dermal Toxicity Data: None reported
Skin and Eye Irritation Data: Skin Human 4%/5 days intermittent MILD, Skin rabbit 500 mg/24H SEVERE, Eye rabbit 20mg MODERATE, Eye rabbit 250µg/24H SEVERE.
Mutation Data: None reported
Reproductive Effects Data: None reported
Ingredient Toxicological Data: --
Not applicable

12. ECOLOGICAL INFORMATION

Product Ecological Information: --
No ecological data available for this product.
Ingredient Ecological Information: --
Not applicable

13. DISPOSAL CONSIDERATIONS

EPA Waste ID Number: None
Special Instructions (Disposal): Dilute to 3 to 5 times the volume with cold water. Adjust to a pH between 6 and 9 with an alkali, such as soda ash or sodium bicarbonate. Open cold water tap completely, slowly pour the reacted material to the drain.
Empty Containers: Rinse three times with an appropriate solvent. Dispose of empty container as normal trash.
NOTICE (Disposal): These disposal guidelines are based on federal regulations and may be superseded by more stringent state or local requirements. Please consult your local environmental regulators for more information.

14. TRANSPORT INFORMATION

D.O.T.:
D.O.T. Proper Shipping Name: Sulphamic Acid
--
DOT Hazard Class: 8
DOT Subsidiary Risk: NA
DOT ID Number: UN2967
DOT Packing Group: III
I.C.A.O.:
I.C.A.O. Proper Shipping Name: Sulphamic Acid
--
ICAO Hazard Class: 8
ICAO Subsidiary Risk: NA
ICAO ID Number: UN2967
ICAO Packing Group: III
I.M.O.:
I.M.O. Proper Shipping Name: Sulphamic Acid
--
I.M.O. Hazard Class: 8
I.M.O. Subsidiary Risk: NA
I.M.O. ID Number: UN2967
I.M.O. Packing Group: III

Additional Information: There is a possibility that this product could be contained in a reagent set or kit composed of various compatible dangerous goods. If the item is NOT in a set or kit, the classification given above applies. If the item IS part of a set or kit, the classification would change to the following: UN3316 Chemical Kit, Class 9, PG II or III. If the item is not regulated, the Chemical Kit classification does not apply.

15. REGULATORY INFORMATION

U.S. Federal Regulations:

O.S.H.A.: This product meets the criteria for a hazardous substance as defined in the Hazard Communication Standard. (29 CFR 1910.1200)

E.P.A.:

S.A.R.A. Title III Section 311/312 Categorization (40 CFR 370): Immediate (Acute) Health Hazard

S.A.R.A. Title III Section 313 (40 CFR 372): This product does NOT contain any chemical subject to the reporting requirements of Section 313 of Title III of SARA.

--

302 (EHS) TPQ (40 CFR 355): Not applicable

304 CERCLA RQ (40 CFR 302.4): Not applicable

304 EHS RQ (40 CFR 355): Not applicable

Clean Water Act (40 CFR 116.4): Not applicable

RCRA: Contains no RCRA regulated substances.

C.P.S.C.: Not applicable

State Regulations:

California Prop. 65: No Prop. 65 listed chemicals are present in this product.

Identification of Prop. 65 Ingredient(s): Not applicable

California Perchlorate Rule CCR Title 22 Chap 33:

Trade Secret Registry: Not applicable

National Inventories:

U.S. Inventory Status: TSCA Listed: Yes

TSCA CAS Number: 5329-14-6

16. OTHER INFORMATION

Intended Use: Laboratory Use

References: Vendor Information. NIOSH Registry of Toxic Effects of Chemical Substances, 1985-86. Cincinnati: U.S. Department of Health and Human Services, April, 1987. Gosselin, R. E. et al. Clinical Toxicology of Commercial Products, 5th Ed. Baltimore: The Williams and Wilkins Co., 1984. Fire Protection Guide on Hazardous Materials, 10th Ed. Quincy, MA: National Fire Protection Fire Protection Guide on Hazardous Materials, 10th Ed. Quincy, MA: National Fire Protection Association, 1991. Outside Testing. Technical Judgment. The Merck Index, 11th Ed. Rahway, New Jersey: Merck and Co., Inc., 1989. Sax, N. Irving. Dangerous Properties of Industrial Materials, 7th Ed. New York: Van Nostrand Reinhold Co., 1989. Air Contaminants, Federal Register, Vol. 54, No. 12. Thursday, January 19, 1989. pp. 2332-2983. TLV's Threshold Limit Values and Biological Exposure Indices for 1992-1993. American Conference of Governmental Industrial Hygienists, 1992.

Revision Summary: Updates in Section(s) 14,

Legend:

NA - Not Applicable	w/w - weight/weight
ND - Not Determined	w/v - weight/volume
NV - Not Available	v/v - volume/volume

USER RESPONSIBILITY: Each user should read and understand this information and incorporate it in individual site safety programs in accordance with applicable hazard communication standards and regulations.

THE INFORMATION CONTAINED HEREIN IS BASED ON DATA CONSIDERED TO BE ACCURATE. HOWEVER, NO WARRANTY IS EXPRESSED OR IMPLIED REGARDING THE ACCURACY OF THESE DATA OR THE RESULTS TO BE OBTAINED FROM THE USE THEREOF.

World Headquarters
Hach Company
P.O.Box 389
Loveland, CO USA 80539
(970) 669-3050

MSDS No: M01157

MATERIAL SAFETY DATA SHEET

1. CHEMICAL PRODUCT AND COMPANY IDENTIFICATION

Product Name: EZ Arsenic Reagent #2
Catalog Number: 2823099

Hach Company
P.O.Box 389
Loveland, CO USA 80539
(970) 669-3050

Emergency Telephone Numbers:
(Medical and Transportation)
(303) 623-5716 24 Hour Service
(515)232-2533 8am - 4pm CST

MSDS Number: M01157
Chemical Name: Zinc
CAS Number: 7440-66-6
Additional CAS No. (for hydrated forms): Not applicable
Chemical Formula: Zn
Chemical Family: Inorganic Metals
Intended Use: Laboratory Reagent

2. HAZARDS IDENTIFICATION

GHS Classification:
Hazard categories: Pyrophoric Solid: Pyr. Sol. 1 Contact with Water Emits Flammable Gases: Water-react. 1 Hazardous to the Aquatic Environment: Aquatic Acute 1 Hazardous to the Aquatic Environment: Aquatic Chronic 1
GHS Label Elements:
DANGER

Hazard statements: Catches fire spontaneously if exposed to air. In contact with water releases flammable gases which may ignite spontaneously. Very toxic to aquatic life with long lasting effects.
Precautionary statements: Keep away from heat/sparks/open flames/hot surfaces. - No smoking. Wear protective gloves / protective clothing / eye protection / face protection. Handle environmental release according to local, state, federal, provincial requirements.
HMIS:
Health: 1
Flammability: 3
Reactivity: 1
Protective Equipment: X - See protective equipment, Section 8.
NFPA:
Health: 1
Flammability: 3
Reactivity: 1
Symbol: Water Reactive

3. COMPOSITION / INFORMATION ON INGREDIENTS

Hazardous Components according to GHS: Yes

Zinc

CAS Number: 7440-66-6
Chemical Formula: Zn
GHS Classification: Pyr.Sol. 1, H250; Water react. 1, H260; Aq Acute 1, H400; Aq Ch. 1 H410;
Percent Range: 100.0
Percent Range Units: weight / weight
PEL: 5 mg/m^3 (ZnO)
TLV: 5 mg/m^3 (ZnO)

4. FIRST AID MEASURE

General Information: In the event of exposure, show this Material Safety Data Sheet and label (where possible) to a doctor.
Advice to doctor: Treat symptomatically.
Eye Contact: Immediately flush eyes with water for 15 minutes. Call physician.
Skin Contact (First Aid): Wash skin with plenty of water. Call physician if irritation develops.
Inhalation: Remove to fresh air.
Ingestion (First Aid): Give large quantities of water. Call physician immediately.

5. FIRE FIGHTING MEASURES

Flammable Properties: During a fire, irritating and highly toxic gases may be generated by thermal decomposition.
Fire Fighting Instruction: As in any fire, wear self-contained breathing apparatus pressure-demand and full protective gear.
Extinguishing Media: Sand or inert dry powder
Extinguishing Media NOT To Be Used: Do NOT use water.
Fire / Explosion Hazards: Finely divided dust may form a flammable or explosive mixture with air. May form explosive mixtures with: oxidizers
Hazardous Combustion Products: zinc oxide

6. ACCIDENTAL RELEASE MEASURES

Spill Response Notice:
Only persons properly qualified to respond to an emergency involving hazardous substances may respond to a spill according to federal regulations (OSHA 29 CFR 1910.120(a)(v)) and per your company's emergency response plan and guidelines/procedures. See Section 13, Special Instructions for disposal assistance. Outside of the US, only persons properly qualified according to state or local regulations should respond to a spill involving chemicals.
Containment Technique: Stop spilled material from being released to the environment.
Clean-up Technique: Sweep up material. Dispose of material in government approved hazardous waste facility. Decontaminate the area of the spill with a soap solution.
Evacuation Procedure: Evacuate as needed to perform spill clean-up. If conditions warrant, increase the size of the evacuation.
DOT Emergency Response Guide Number: 138

7. HANDLING AND STORAGE

Handling: Avoid contact with eyes Do not breathe dust. Wash thoroughly after handling. Use with adequate ventilation. Maintain general industrial hygiene practices when using this product.
Storage: Protect from: heat moisture
Flammability Class: Not applicable

8. EXPOSURE CONTROLS / PROTECTIVE EQUIPMENT

Engineering Controls: Maintain general industrial hygiene practices when using this product.
Personal Protective Equipment:
Eye Protection: safety glasses with top and side shields
Skin Protection: lab coat
Inhalation Protection: adequate ventilation

Precautionary Measures: Avoid contact with: eyes Do not breathe: dust Wash thoroughly after handling. Use with adequate ventilation. Protect from: heat moisture
TLV: 5 mg/m^3 (ZnO)
PEL: 5 mg/m^3 (ZnO)
For Occupational Exposure Limits (OEL) for ingredients, see section 3 - Composition/Information on Ingredients.:

9. PHYSICAL AND CHEMICAL PROPERTIES

Appearance: Bluish-gray powder
Physical State: Solid
Molecular Weight: 65.37
Odor: None
Odor Threshold: Odorless
pH: Not applicable
Metal Corrosivity:
Corrosivity Classification: Not classified as corrosive to metals according to GHS criteria.
Steel: Not determined
Aluminum: Not determined
Specific Gravity/ Relative Density (water = 1; air =1): 7.14
Viscosity: Not applicable
Solubility:
Water: Insoluble
Acid: Soluble
Other: Soluble in alkali solutions
Partition Coefficient (n-octanol / water): Not applicable
Coefficient of Water / Oil: Not applicable
Melting Point: 419° C (786° F)
Decomposition Temperature: Not applicable
Boiling Point: 907° C (1665° F)
Vapor Pressure: Not applicable
Vapor Density (air = 1): Not applicable
Evaporation Rate (water = 1): Not applicable
Volatile Organic Compounds Content: Not applicable
Flammable Properties: During a fire, irritating and highly toxic gases may be generated by thermal decomposition.
Flash Point: Not determined
Method: Not applicable
Flammability Limits:
Lower Explosion Limits: Not applicable
Upper Explosion Limits: Not applicable
Autoignition Temperature: Not determined
Explosive Properties:
Not classified according to GHS criteria.
Oxidizing Properties:
Not classified according to GHS criteria.
Reactivity Properties:
Pyrophoric solid. In contact with water, emits flammable gases.
Gas under Pressure: Not classified as gas under pressure according to GHS.

10. STABILITY AND REACTIVITY

Chemical Stability: Stable when stored under proper conditions.
Mechanical Impact: None reported
Static Discharge: None reported.
Reactivity / Incompatibility: Incompatible with: Barium dioxide barium nitrate cadmium carbon disulfide chlorates chlorine fluorine hydroxylamine sulfur magnesium manganese chloride potassium chloride selenium
Hazardous Decomposition: Heating to decomposition releases: zinc oxide
Conditions to Avoid: Heating to decomposition. Avoid creating dust.

11. TOXICOLOGICAL INFORMATION

Toxicokinetics, Metabolism and Distribution:

Ingestion: 10 times recommended daily allowance - no adverse effects. Excessive: may cause copper -deficiency anemia.
Toxicologically Synergistic Products: None reported
Acute Toxicity: Based on classification principles, the classification criteria are not met. Route Data Given Below
Inhalation human LCLo(50 min) = 124 mg/m³; TCLo (4hr) = 0.026mg/L.
Specific Target Organ Toxicity - Single Exposure (STOT-SE): Based on classification principles, the classification criteria are not met.
Specific Target Organ Toxicity - Repeat Exposure (STOT-RE): Based on classification principles, the classification criteria are not met.
Skin Corrosion/Irritation: Based on classification principles, the classification criteria are not met.
Skin human 300 µg/3D (Intermittent) - MILD.
Eye Damage: Based on classification principles, the classification criteria are not met.
Dust may cause mechanical irritation.
Sensitization: Based on classification principles, the classification criteria are not met.
CMR Effects/Properties (carcinogenic, mutagenic or toxic to reproduction): Data insufficient for classification
IARC Listed: No
NTP Listed: No
O.S.H.A. Listed: No
Symptoms/Effects:
Ingestion: Very large doses may cause: thirst sweating gastrointestinal tract irritation abdominal pain
Inhalation: May cause: irritation of nose and throat coughing difficult breathing sweating
Skin Absorption: No effects anticipated
Chronic Effects: None reported
Medical Conditions Aggravated: Pre-existing: Skin conditions

12. ECOLOGICAL INFORMATION

Product Ecological Information: Oncorhynchus mykiss 96 hr LC50 = 0.41 mg/L; Daphnia magna 48 hr EC50 = 0.139 - 0.908 mg/L; Pseudokirchneriella subcapitata 96 hr EC50 = 0.11 - 0.271 mg/L.
CEPA Categorization: Persistent Not Bioaccumulative Not inherently toxic to aquatic organisms
Ingredient Ecological Information: --
Not applicable

13. DISPOSAL CONSIDERATIONS

EPA Waste ID Number: D001
Special Instructions (Disposal): Dispose of material in an E.P.A. approved hazardous waste facility.
Empty Containers: Rinse three times with an appropriate solvent. Dispose of empty container as normal trash.
NOTICE (Disposal): These disposal guidelines are based on federal regulations and may be superseded by more stringent state or local requirements. Please consult your local environmental regulators for more information. In Europe: Chemical and analysis solutions must be disposed of in compliance with the respective national regulations. Product packaging must be disposed of in compliance with the country-specific regulations or must be passed to a packaging return system.

14. TRANSPORT INFORMATION

D.O.T.:
D.O.T. Proper Shipping Name: Zinc Powder
--
Hazard Class: 4.3
Subsidiary Risk: 4.2
ID Number: UN1436
Packing Group: III
T.D.G.:
Proper Shipping Name: Zinc Powder
--
Hazard Class: 4.3
Subsidiary Risk: 4.2
PIN: 1436
Group: III
I.C.A.O.:
I.C.A.O. Proper Shipping Name: Zinc Powder
--

Hazard Class: 4.3
Subsidiary Risk: 4.2
ID Number: UN1436
Packing Group: III

I.M.O.:
I.M.O. Proper Shipping Name: Zinc Powder
--
Hazard Class: 4.3
Subsidiary Risk: 4.2
ID Number: UN1436
Packing Group: III

Additional Information: There is a possibility that this product could be contained in a reagent set or kit composed of various compatible dangerous goods. If the item is NOT in a set or kit, the classification given above applies. If the item IS part of a set or kit, the classification would change to the following: UN3316 Chemical Kit, Class 9, PG II or III. If the item is not regulated, the Chemical Kit classification does not apply.

15. REGULATORY INFORMATION

U.S. Federal Regulations:
O.S.H.A.: This product meets the criteria for a hazardous substance as defined in the Hazard Communication Standard. (29 CFR 1910.1200)
E.P.A.:
S.A.R.A. Title III Section 311/312 Categorization (40 CFR 370): Immediate (Acute) Health Hazard Fire Hazard
S.A.R.A. Title III Section 313 (40 CFR 372): This product contains a chemical(s) subject to the reporting requirements of Section 313 of Title III of SARA.
Zinc
302 (EHS) TPQ (40 CFR 355): Not applicable
304 CERCLA RQ (40 CFR 302.4): Zinc 1000 lbs.
304 EHS RQ (40 CFR 355): Not applicable
Clean Water Act (40 CFR 116.4): Not applicable
RCRA: Contains no RCRA regulated substances.

State Regulations:
California Prop. 65: No Prop. 65 listed chemicals are present in this product.
Identification of Prop. 65 Ingredient(s): None
California Perchlorate Rule CCR Title 22 Chap 33: Not applicable
Trade Secret Registry: Not applicable

National Inventories:
U.S. Inventory Status: TSCA Listed: Yes
CAS Number: 7440-66-6
Canadian Inventory Status: DSL Listed: Yes
EEC Inventory Status: EINECS Listed: Yes
Australian Inventory (AICS) Status: Listed
New Zealand Inventory (NZIoC) Status: Listed
Korean Inventory (KECI) Status: Listed
Japan (ENCS) Inventory Status: Some ingredients are not listed or exempt.
China (PRC) Inventory (MEP) Status: Listed

16. OTHER INFORMATION

References: Air Contaminants, Federal Register, Vol. 54, No. 12. Thursday, January 19, 1989. pp. 2332-2983. CCINFO RTECS. Canadian Centre for Occupational Health and Safety. Hamilton, Ontario Canada: 30 June 1993. In-house information. Patty, Frank A. Industrial Hygiene and Toxicology, 3rd Revised Edition. Volume 2. New York: A Wiley-Interscience Publication, 1981. Prager, Jan C. Environmental Contaminants Reference Databook, Volumes I and II. Van Nostrand Reinhold Company, New York. Sax, N. Irving and Richard J. Lewis, Sr., revised by. Hawley's Condensed Chemical Dictionary, Eleventh Ed. New York: Van Nostrand Reinhold Co., 1987. Sax, N. Irving. Dangerous Properties of Industrial Materials, 7th Ed. New York: Van Nostrand Reinhold Co., 1989. Technical Judgment. TLV's Threshold Limit Values and Biological Exposure Indices for 1992-1993. American Conference of Governmental Industrial Hygienists, 1992. Vendor Information.
Complete Text of H phrases referred to in Section 3: H250 Catches fire spontaneously if exposed to air. H260 In contact with water releases flammable gases which may ignite spontaneously. H400 Very toxic to aquatic life. H410 Very toxic to aquatic life with long lasting effects.

Revision Summary: . Substantial revision to comply with EU Reg 1272/2008, Reg 1907/2006 and UN GHS (ST/SG/AC.10/36/Add.3).

Date of MSDS Preparation:

Day: 04

Month: March

Year: 2011

MSDS Prepared: MSDS prepared by Product Compliance Department extension 3350

CCOHS Evaluation Note: This product has been classified and labeled in accordance with the requirements of GHS (ST/SG/AC.10/36/Add.3). It is offered under the interim policy that was established by Health Canada permitting use of GHS-formatted safety data sheets in Canada prior to revision of CPR to GHS. It is offered under exemption from WHMIS labeling as specified in the Controlled Products Regulation (CPR) Section 17.

Legend:

NA - Not Applicable	w/w - weight/weight
ND - Not Determined	w/v - weight/volume
NV - Not Available	v/v - volume/volume

USER RESPONSIBILITY: Each user should read and understand this information and incorporate it in individual site safety programs in accordance with applicable hazard communication standards and regulations.

THE INFORMATION CONTAINED HEREIN IS BASED ON DATA CONSIDERED TO BE ACCURATE. HOWEVER, NO WARRANTY IS EXPRESSED OR IMPLIED REGARDING THE ACCURACY OF THESE DATA OR THE RESULTS TO BE OBTAINED FROM THE USE THEREOF.

World Headquarters
Hach Company
P.O.Box 389
Loveland, CO USA 80539
(970) 669-3050

MSDS No: M01120

MATERIAL SAFETY DATA SHEET

1. CHEMICAL PRODUCT AND COMPANY IDENTIFICATION

Product Name: Lead Acetate, 10%
Catalog Number: 2823123

Hach Company
P.O.Box 389
Loveland, CO USA 80539
(970) 669-3050

Emergency Telephone Numbers:
(Medical and Transportation)
(303) 623-5716 24 Hour Service
(515)232-2533 8am - 4pm CST

MSDS Number: M01120
Chemical Name: Not applicable
CAS No.: Not applicable
Chemical Formula: Not applicable
Chemical Family: Not applicable
Hazard: Experimental carcinogen. Experimental mutagen. Experimental teratogen. Harmful if swallowed
Date of MSDS Preparation:
Day: 14
Month: December
Year: 2007

2. COMPOSITION / INFORMATION ON INGREDIENTS

Acetic Acid
CAS No.: 64-19-7
TSCA CAS Number: 64-19-7
Percent Range: 1.0 - 5.0
Percent Range Units: weight / weight
LD50: Oral rat LD50 = 3310 mg/kg
LC50: Human TCLo = 816 ppm / 3 minutes (Irritant) ; Mouse LC50 = 5620 ppm / 1 hour
TLV: 10 ppm (15 ppm STEL)
PEL: 10 ppm
Hazard: Flammable. Causes severe burns.

Demineralized Water
CAS No.: 7732-18-5
TSCA CAS Number: 7732-18-5
Percent Range:
Percent Range Units:
LD50: None reported
LC50: None reported
TLV: Not established
PEL: Not established
Hazard: No effects anticipated.

Lead Acetate
CAS No.: 6080-56-4
TSCA CAS Number: 301-04-2

Percent Range: 5.0 - 15.0
Percent Range Units: weight / volume
LD50: Oral Human LD_{Lo} = 714 mg/kg; Oral Dog LD_{Lo} = 300 mg/kg
LC50: None reported
TLV: 0.15 mg/m³ as Pb
PEL: 0.05 mg/m³ as Pb
Hazard: Poison. Experimental carcinogen. Experimental mutagen. Experimental teratogen.

---

3. HAZARDS IDENTIFICATION

Emergency Overview:
Appearance: Clear, colorless liquid
Odor: Vinegar
HARMFUL IF SWALLOWED MAY CAUSE EYE, SKIN AND RESPIRATORY TRACT IRRITATION
POSSIBLE CANCER HAZARD: MAY CAUSE CANCER BASED ON ANIMAL DATA POSSIBLE BIRTH DEFECT HAZARD: MAY CAUSE BIRTH DEFECTS

HMIS:
Health: 3
Flammability: 0
Reactivity: 0
Protective Equipment: X - See protective equipment, Section 8.
NFPA:
Health: 3
Flammability: 0
Reactivity: 0
Symbol: Not applicable
Potential Health Effects:
Eye Contact: May cause irritiation
Skin Contact: May cause irritiation
Skin Absorption: Harmful if absorbed through the skin Effects similar to those of ingestion
Target Organs: Central nervous system Brain
Ingestion: May cause: gastrointestinal disturbances nausea vomiting central nervous system effects weakness headache shock convulsions brain damage yellow jaundice kidney damage coma death
Target Organs: Brain Kidneys Peripheral nervous system Central nervous system
Inhalation: Toxic. Effects similar to those of ingestion. May cause: respiratory tract irritation
Target Organs: Central nervous system Brain
Medical Conditions Aggravated: Persons with pre-existing circulatory or nerve disorders may have increased susceptibility to lead poisoning. Pre-existing: Eye conditions Skin conditions
Chronic Effects: Lead is a cumulative poison and exposure even to small amounts can raise the body's content to toxic levels. Small children are especially susceptible to the effects of lead poisoning.
Cancer / Reproductive Toxicity Information:
This product does NOT contain any OSHA listed carcinogens.

IARC Group 2B: Experimental Carcinogen
Lead and Lead Compounds, Inorganic
NTP Listed Group 2B: Experimental Carcinogen
Lead Acetate
Additional Cancer / Reproductive Toxicity Information: Contains: an experimental mutagen. an experimental teratogen.
Toxicologically Synergistic Products: None reported

---

4. FIRST AID

Eye Contact: Immediately flush eyes with water for 15 minutes. Call physician.
Skin Contact (First Aid): Wash skin with soap and plenty of water. Call physician immediately.
Ingestion (First Aid): Induce vomiting using syrup of ipecac or by sticking finger down throat. Never give anything by mouth to an unconscious person. Call physician immediately.
Inhalation: Remove to fresh air.

---

5. FIRE FIGHTING MEASURES

Flammable Properties: During a fire, this product decomposes to form toxic gases.
Flash Point: Not applicable
Method: Not applicable
Flammability Limits:
Lower Explosion Limits: Not applicable
Upper Explosion Limits: Not applicable
Autoignition Temperature: Not applicable
Hazardous Combustion Products: This material will not burn.
Fire / Explosion Hazards: This product will not burn or explode.
Static Discharge: None reported.
Mechanical Impact: None reported
Extinguishing Media: Use media appropriate to surrounding fire conditions
Fire Fighting Instruction: As in any fire, wear self-contained breathing apparatus pressure-demand and full protective gear. Water runoff can cause environmental damage. Dike and collect water used to fight fire.

---

6. ACCIDENTAL RELEASE MEASURES

Spill Response Notice:
Only persons properly qualified to respond to an emergency involving hazardous substances may respond to a spill according to federal regulations (OSHA 29 CFR 1910.120(a)(v)) and per your company's emergency response plan and guidelines/procedures. See Section 13, Special Instructions for disposal assistance.
Containment Technique: Releases of this material may contaminate the environment. Absorb spilled liquid with non-reactive sorbent material. Stop spilled material from being released to the environment. Dike the spill to contain material for later disposal.
Clean-up Technique: Cover spilled material with an alkali, such as soda ash or sodium bicarbonate. Scoop up slurry into a large beaker. Adjust to a pH between 6 and 9 with an alkali, such as soda ash or sodium bicarbonate. Dispose of material in an E.P.A. approved hazardous waste facility. Decontaminate the area of the spill with a soap solution.
Evacuation Procedure: Evacuate general area (50 foot radius or as directed by your facility's emergency response plan) when: any quantity is spilled.
Special Instructions (for accidental release): Product is regulated as a hazardous water pollutant. Product is regulated as RCRA hazardous waste. Product is regulated as a hazardous air pollutant.
304 EHS RQ (40 CFR 355): Not applicable
D.O.T. Emergency Response Guide Number: None

---

7. HANDLING / STORAGE

Handling: Avoid contact with eyes skin clothing Do not breathe mist or vapors. Wash thoroughly after handling. Maintain general industrial hygiene practices when using this product.
Storage: Keep container tightly closed when not in use. Keep away from: oxidizers
Flammability Class: Not applicable

---

8. EXPOSURE CONTROLS / PROTECTIVE EQUIPMENT

Engineering Controls: Have an eyewash station nearby. Maintain general industrial hygiene practices when using this product. Use a fume hood to avoid exposure to dust, mist or vapor.
Personal Protective Equipment:
Eye Protection: safety glasses with top and side shields
Skin Protection: disposable latex gloves
Inhalation Protection: laboratory fume hood
Precautionary Measures: Avoid contact with: eyes clothing Do not breathe: mist/vapor Wash thoroughly after handling. Keep away from: oxidizers
TLV: Not established
PEL: Not established

9. PHYSICAL / CHEMICAL PROPERTIES

Appearance: Clear, colorless liquid
Physical State: Liquid
Molecular Weight: Not applicable
Odor: Vinegar
pH: 3.9
Vapor Pressure: Not available
Vapor Density (air = 1): Not available
Boiling Point: 99.2°C; 211°F
Melting Point: Not available
Specific Gravity (water = 1): 1.067
Evaporation Rate (water = 1): 0.73
Volatile Organic Compounds Content: Not available
Partition Coefficient (n-octanol / water): Not applicable
Solubility:
Water: Miscible
Acid: Miscible
Other: Not determined
Metal Corrosivity:
Steel: Not determined
Aluminum: Not determined

10. STABILITY / REACTIVITY

Chemical Stability: Stable when stored under proper conditions.
Conditions to Avoid: Extreme temperatures Heating to decomposition.
Reactivity / Incompatibility: Incompatible with: strong acids oxidizers sulfites
Hazardous Decomposition: Heating to decomposition releases: Toxic fumes of: lead carbon monoxide carbon dioxide
Hazardous Polymerization: Will not occur.

11. TOXICOLOGICAL INFORMATION

Product Toxicological Data:
LD50: None reported
LC50: None reported
Dermal Toxicity Data: Acetic Acid: Rabbit LD50 = 1060 mg/kg
Skin and Eye Irritation Data: None reported
Mutation Data: Lead Acetate: Cytogenetic Analysis - Human Lymphocytes 1 mmol/L/24H; Cytogenetic Analysis - Oral rat 5000 ppm; Oncogenic Transformation - Mouse Fibroblast 800 µg/L; Acetic Acid: Human sister chromatid exchange in Lymphocytes at 5 mmol/L
Reproductive Effects Data: Lead Acetate: Oral rat TDLo 600 µg/kg - 30 days premating - Paternal reproductive effects; Oral rat TDLo 460 mg/kg - 49 days premating - Newborn growth effects

Ingredient Toxicological Data: Lead Acetate: Oral human LDLo = 714 mg/kg; Oral dog LDLo = 300 mg/kg; Acetic Acid: Oral rat LD50 = 3310 mg/kg

12. ECOLOGICAL INFORMATION

Product Ecological Information: --
No ecological data available for this product.
Ingredient Ecological Information: --
No ecological data available for the ingredients of this product.

13. DISPOSAL CONSIDERATIONS

EPA Waste ID Number: D008
Special Instructions (Disposal): Dispose of material in an E.P.A. approved hazardous waste facility.
Empty Containers: Rinse three times with an appropriate solvent. Rinsate from empty containers may contain sufficient product to require disposal as hazardous waste. Dispose of empty container as normal trash.
NOTICE (Disposal): These disposal guidelines are based on federal regulations and may be superseded by more stringent state or local requirements. Please consult your local environmental regulators for more information.

14. TRANSPORT INFORMATION

D.O.T.:
D.O.T. Proper Shipping Name: Not Currently Regulated
--
DOT Hazard Class: NA
DOT Subsidiary Risk: NA
DOT ID Number: NA
DOT Packing Group: NA
I.C.A.O.:
I.C.A.O. Proper Shipping Name: Not Currently Regulated
--
ICAO Hazard Class: NA
ICAO Subsidiary Risk: NA
ICAO ID Number: NA
ICAO Packing Group: NA
I.M.O.:
I.M.O. Proper Shipping Name: Not Currently Regulated
--
I.M.O. Hazard Class: NA
I.M.O. Subsidiary Risk: NA
I.M.O. ID Number: NA
I.M.O. Packing Group: NA
Additional Information: There is a possibility that this product could be contained in a reagent set or kit composed of various compatible dangerous goods. If the item is NOT in a set or kit, the classification given above applies. If the item IS part of a set or kit, the classification would change to the following: UN3316 Chemical Kit, Class 9, PG II or III. If the item is not regulated, the Chemical Kit classification does not apply.

15. REGULATORY INFORMATION

U.S. Federal Regulations:
O.S.H.A.: This product contains Lead and is regulated under 29CFR Subpart Z 1910.1025.
E.P.A.:

S.A.R.A. Title III Section 311/312 Categorization (40 CFR 370): Immediate (Acute) Health Hazard Delayed (Chronic) Health Hazard

S.A.R.A. Title III Section 313 (40 CFR 372): This product contains a chemical(s) subject to the reporting requirements of Section 313 of Title III of SARA.

Lead Acetate

302 (EHS) TPQ (40 CFR 355): Not applicable

304 CERCLA RQ (40 CFR 302.4): Lead Acetate: 10 lbs.

304 EHS RQ (40 CFR 355): Not applicable

Clean Water Act (40 CFR 116.4): Lead acetate - RQ 10 lbs.

RCRA: Contains RCRA regulated substances. See Section 13, EPA Waste ID Number.

C.P.S.C.: Not applicable

State Regulations:

California Prop. 65: WARNING - This product contains a chemical known to the State of California to cause cancer. WARNING - This product contains a chemical known to the State of California to cause birth defects or other reproductive harm.

Identification of Prop. 65 Ingredient(s): Lead Acetate

California Perchlorate Rule CCR Title 22 Chap 33:

Trade Secret Registry: Not applicable

National Inventories:

U.S. Inventory Status: All ingredients in this product are listed on the TSCA 8(b) Inventory (40 CFR 710).

TSCA CAS Number: Not applicable

16. OTHER INFORMATION

Intended Use: Laboratory Reagent

References: Air Contaminants, Federal Register, Vol. 54, No. 12. Thursday, January 19, 1989. pp. 2332-2983. TLV's Threshold Limit Values and Biological Exposure Indices for 1992-1993. American Conference of Governmental Industrial Hygienists, 1992. In-house information. Technical Judgment. Vendor Information. 29 CFR 1900 - 1910 (Code of Federal Regulations - Labor). CCINFO RTECS. Canadian Centre for Occupational Health and Safety. Hamilton, Ontario Canada: 30 June 1993. IARC Monographs on the Evaluation of the Carcinogenic Risks to Humans. World Health Organization (Volumes 1-42) Supplement 7. France: 1987.

Revision Summary: Updates in Section(s) 14,

Legend:

NA - Not Applicable	w/w - weight/weight
ND - Not Determined	w/v - weight/volume
NV - Not Available	v/v - volume/volume

USER RESPONSIBILITY: Each user should read and understand this information and incorporate it in individual site safety programs in accordance with applicable hazard communication standards and regulations.

THE INFORMATION CONTAINED HEREIN IS BASED ON DATA CONSIDERED TO BE ACCURATE. HOWEVER, NO WARRANTY IS EXPRESSED OR IMPLIED REGARDING THE ACCURACY OF THESE DATA OR THE RESULTS TO BE OBTAINED FROM THE USE THEREOF.

World Headquarters
Hach Company
P.O.Box 389
Loveland, CO USA 80539
(970) 669-3050

MSDS No: M00244

MATERIAL SAFETY DATA SHEET

1. CHEMICAL PRODUCT AND COMPANY IDENTIFICATION

Product Name: Arsenic Reagent #1
Catalog Number: 2797899

Hach Company
P.O.Box 389
Loveland, CO USA 80539
(970) 669-3050

Emergency Telephone Numbers:
(Medical and Transportation)
(303) 623-5716 24 Hour Service
(515)232-2533 8am - 4pm CST

MSDS Number: M00244
Chemical Name: Phosphoric acid, disodium salt
CAS No.: 7558-79-4
Chemical Formula: Na_2HPO_4
Chemical Family: Inorganic Salt
Hazard: May cause irritation.
Date of MSDS Preparation:
Day: 25
Month: September
Year: 2007

2. COMPOSITION / INFORMATION ON INGREDIENTS

Sodium Phosphate, Dibasic
CAS No.: 7558-79-4
TSCA CAS Number: 7558-79-4
Percent Range: 100.0
Percent Range Units: weight / weight
LD50: Oral rat LD50 = 17 g/kg.
LC50: None reported
TLV: Not established
PEL: Not established
Hazard: May cause irritation.

3. HAZARDS IDENTIFICATION

Emergency Overview:
Appearance: Colorless crystals
Odor: None
MAY CAUSE EYE AND RESPIRATORY TRACT IRRITATION

HMIS:
Health: 1
Flammability: 0

Reactivity: 0
Protective Equipment: X - See protective equipment, Section 8.
NFPA:
Health: 1
Flammability: 0
Reactivity: 0
Symbol: Not applicable
Potential Health Effects:
Eye Contact: May cause irritiation
Skin Contact: No effects are anticipated
Skin Absorption: No effects anticipated
Target Organs: Not applicable
Ingestion: Very large doses may cause: fever lethargy diarrhea muscular cramps nausea vomiting
Target Organs: None reported
Inhalation: May cause: respiratory tract irritation
Target Organs: None reported
Medical Conditions Aggravated: None reported
Chronic Effects: None reported
Cancer / Reproductive Toxicity Information:
O.S.H.A. Listed: No

IARC Listed: No

NTP Listed: No

Additional Cancer / Reproductive Toxicity Information: None reported
Toxicologically Synergistic Products: None reported

4. FIRST AID

Eye Contact: Immediately flush eyes with water for 15 minutes. Call physician.
Skin Contact (First Aid): Wash skin with plenty of water.
Ingestion (First Aid): Give large quantities of water. Call physician immediately.
Inhalation: Remove to fresh air.

5. FIRE FIGHTING MEASURES

Flammable Properties: During a fire, corrosive and toxic gases may be generated by thermal decomposition.
Flash Point: Not applicable
Method: Not applicable
Flammability Limits:
Lower Explosion Limits: Not applicable
Upper Explosion Limits: Not applicable
Autoignition Temperature: Not applicable
Hazardous Combustion Products: Toxic fumes of: phosphorus oxides
Fire / Explosion Hazards: None reported
Static Discharge: None reported.
Mechanical Impact: None reported
Extinguishing Media: Dry chemical. Carbon dioxide Water.
Fire Fighting Instruction: As in any fire, wear self-contained breathing apparatus pressure-demand and full protective gear.

6. ACCIDENTAL RELEASE MEASURES

Spill Response Notice:

Only persons properly qualified to respond to an emergency involving hazardous substances may respond to a spill according to federal regulations (OSHA 29 CFR 1910.120(a)(v)) and per your company's emergency response plan and guidelines/procedures. See Section 13, Special Instructions for disposal assistance.
Containment Technique: Stop spilled material from being released to the environment.
Clean-up Technique: Scoop up spilled material into a large beaker and dissolve with water. Adjust to a pH between 6 and 9 with an acid, such as sulfuric or citric. Flush reacted material to the drain with a large excess of water. Decontaminate the area of the spill with a soap solution.
Evacuation Procedure: Evacuate as needed to perform spill clean-up. If conditions warrant, increase the size of the evacuation.
Special Instructions (for accidental release): Product is regulated as a hazardous water pollutant.
304 EHS RQ (40 CFR 355): Not applicable
D.O.T. Emergency Response Guide Number: Not applicable

7. HANDLING / STORAGE

Handling: Avoid contact with eyes Do not breathe dust. Wash thoroughly after handling. Maintain general industrial hygiene practices when using this product.
Storage: Protect from: heat moisture
Flammability Class: Not applicable

8. EXPOSURE CONTROLS / PROTECTIVE EQUIPMENT

Engineering Controls: Maintain general industrial hygiene practices when using this product.
Personal Protective Equipment:
Eye Protection: safety glasses with top and side shields
Skin Protection: disposable latex gloves lab coat
Inhalation Protection: adequate ventilation
Precautionary Measures: Avoid contact with: eyes Do not breathe: dust Wash thoroughly after handling. Protect from: heat moisture
TLV: Not established
PEL: Not established

9. PHYSICAL / CHEMICAL PROPERTIES

Appearance: Colorless crystals
Physical State: Solid
Molecular Weight: 141.96 g/mol
Odor: None
pH: 9.1 (1% solution)
Vapor Pressure: Not applicable
Vapor Density (air = 1): Not applicable
Boiling Point: Not applicable
Melting Point: Not determined
Specific Gravity (water = 1): 1.62
Evaporation Rate (water = 1): Not applicable
Volatile Organic Compounds Content: Not applicable
Partition Coefficient (n-octanol / water): Not determined
Solubility:
Water: Soluble
Acid: Not determined
Other: Insoluble in alcohol
Metal Corrosivity:
Steel: Not determined
Aluminum: Not determined

10. STABILITY / REACTIVITY

Chemical Stability: Stable when stored under proper conditions.
Conditions to Avoid: Extreme temperatures Excess moisture
Reactivity / Incompatibility: None reported
Hazardous Decomposition: Toxic fumes of: phosphorus oxides
Hazardous Polymerization: Will not occur.

11. TOXICOLOGICAL INFORMATION

Product Toxicological Data:
LD50: Oral rat LD50 = 17 g/kg.
LC50: None reported
Dermal Toxicity Data: None reported
Skin and Eye Irritation Data: Eye irritation rabbit: 500mg/24 hrs = MILD; Skin irritation rabbit: 500 mg/24 hrs = MILD.
Mutation Data: None reported
Reproductive Effects Data: None reported
Ingredient Toxicological Data: --
Not applicable

12. ECOLOGICAL INFORMATION

Product Ecological Information: --
No ecological data available for this product.
Ingredient Ecological Information: --
Not applicable

13. DISPOSAL CONSIDERATIONS

EPA Waste ID Number: Not applicable
Special Instructions (Disposal): Adjust to a pH between 6 and 9 with an acid, such as sulfuric or citric. Open cold water tap completely, slowly pour the reacted material to the drain. Allow cold water to run for 5 minutes to completely flush the system.
Empty Containers: Rinse three times with an appropriate solvent. Dispose of empty container as normal trash.
NOTICE (Disposal): These disposal guidelines are based on federal regulations and may be superseded by more stringent state or local requirements. Please consult your local environmental regulators for more information.

14. TRANSPORT INFORMATION

D.O.T.:
D.O.T. Proper Shipping Name: Not Currently Regulated
--
DOT Hazard Class: NA
DOT Subsidiary Risk: NA
DOT ID Number: NA
DOT Packing Group: NA
I.C.A.O.:
I.C.A.O. Proper Shipping Name: Not Currently Regulated
--
ICAO Hazard Class: NA

ICAO Subsidiary Risk: NA
ICAO ID Number: NA
ICAO Packing Group: NA
I.M.O.:
I.M.O. Proper Shipping Name: Not Currently Regulated
--
I.M.O. Hazard Class: NA
I.M.O. Subsidiary Risk: NA
I.M.O. ID Number: NA
I.M.O. Packing Group: NA
Additional Information: There is a possibility that this product could be contained in a reagent set or kit composed of various compatible dangerous goods. If the item is NOT in a set or kit, the classification given above applies. If the item IS part of a set or kit, the classification would change to the following: UN3316 Chemical Kit, Class 9, PG II or III. If the item is not regulated, the Chemical Kit classification does not apply.

15. REGULATORY INFORMATION

U.S. Federal Regulations:
O.S.H.A.: This product meets the criteria for a hazardous substance as defined in the Hazard Communication Standard. (29 CFR 1910.1200)
E.P.A.:
S.A.R.A. Title III Section 311/312 Categorization (40 CFR 370): Immediate (Acute) Health Hazard
S.A.R.A. Title III Section 313 (40 CFR 372): This product does NOT contain any chemical subject to the reporting requirements of Section 313 of Title III of SARA.
--
302 (EHS) TPQ (40 CFR 355): Not applicable
304 CERCLA RQ (40 CFR 302.4): Sodium phosphate, dibasic 5000 lbs.
304 EHS RQ (40 CFR 355): Not applicable
Clean Water Act (40 CFR 116.4): Sodium phosphate, dibasic - RQ 5000 lbs.
RCRA: Contains no RCRA regulated substances.
C.P.S.C.: Not applicable
State Regulations:
California Prop. 65: No Prop. 65 listed chemicals are present in this product.
Identification of Prop. 65 Ingredient(s): None
California Perchlorate Rule CCR Title 22 Chap 33:
Trade Secret Registry: Not applicable
National Inventories:
U.S. Inventory Status: TSCA Listed: Yes
TSCA CAS Number: 7558-79-4

16. OTHER INFORMATION

Intended Use: Laboratory Reagent
References: CCINFO MSDS/FTSS. Canadian Centre for Occupational Health and Safety. Hamilton, Ontario Canada: 30 June 1993. Vendor Information. Technical Judgment. Sax, N. Irving. Dangerous Properties of Industrial Materials, 7th Ed. New York: Van Nostrand Reinhold Co., 1989. The Merck Index, 11th Ed. Rahway, New Jersey: Merck and Co., Inc., 1989. TLV's Threshold Limit Values and Biological Exposure Indices for 1992-1993. American Conference of Governmental Industrial Hygienists, 1992. Air Contaminants, Federal Register, Vol. 54, No. 12. Thursday, January 19, 1989. pp. 2332-2983. 29 CFR 1900 - 1910 (Code of Federal Regulations - Labor). CCINFO RTECS. Canadian Centre for Occupational Health and Safety. Hamilton, Ontario Canada: 30 June 1993. IARC Monographs on the Evaluation of the Carcinogenic Risks to Humans. World Health Organization (Volumes 1-42) Supplement 7. France: 1987. List of Dangerous Substances Classified in Annex I of the EEC Directive (67/548) - Classification, Packaging and Labeling of

Dangerous Substances, Amended July 1992. Sixth Annual Report on Carcinogens, 1991. U.S. Department of Health and Human Services. Rockville, MD: Technical Resources, Inc. 1991.
Revision Summary: Updates in Section(s) 14,

Legend:

NA - Not Applicable	w/w - weight/weight
ND - Not Determined	w/v - weight/volume
NV - Not Available	v/v - volume/volume

USER RESPONSIBILITY: Each user should read and understand this information and incorporate it in individual site safety programs in accordance with applicable hazard communication standards and regulations.

THE INFORMATION CONTAINED HEREIN IS BASED ON DATA CONSIDERED TO BE ACCURATE. HOWEVER, NO WARRANTY IS EXPRESSED OR IMPLIED REGARDING THE ACCURACY OF THESE DATA OR THE RESULTS TO BE OBTAINED FROM THE USE THEREOF.

World Headquarters
Hach Company
P.O.Box 389
Loveland, CO USA 80539
(970) 669-3050

MSDS No: M01887

MATERIAL SAFETY DATA SHEET

1. CHEMICAL PRODUCT AND COMPANY IDENTIFICATION

Product Name: Arsenic Reagent #2
Catalog Number: 2797799

Hach Company
P.O.Box 389
Loveland, CO USA 80539
(970) 669-3050

Emergency Telephone Numbers:
(Medical and Transportation)
(303) 623-5716 24 Hour Service
(515)232-2533 8am - 4pm CST

MSDS Number: M01887
Chemical Name: Potassium peroxymonosulfate
CAS No.: 70693-62-8
Chemical Formula: $H_3K_5S_4O_{18}$
Chemical Family: Oxidizing Agents
Hazard: Oxidizer. Causes burns. May cause allergic reaction.
Date of MSDS Preparation:
Day: 25
Month: August
Year: 2007

2. COMPOSITION / INFORMATION ON INGREDIENTS

Oxone, monopersulfate compound
CAS No.: 70693-62-8
TSCA CAS Number: Not Applicable
Percent Range: 100.0
Percent Range Units: weight / weight
LD50: Oral rat LD50 = 2000 mg/kg.
LC50: Inhalation rat LC50 > 5 mg/l/4H.
TLV: Not Established
PEL: Not Established
Hazard: Oxidizer. Causes burns. May cause allergic reaction.

3. HAZARDS IDENTIFICATION

Emergency Overview:
Appearance: White powder
Odor: None
CAUSES BURNS CAUSES RESPIRATORY TRACT IRRITATION MAY CAUSE ALLERGIC REACTION

STRONG OXIDIZER: CONTACT WITH OTHER MATERIAL MAY CAUSE FIRE

HMIS:
Health: 2

Flammability: 0
Reactivity: 0
Protective Equipment: X - See protective equipment, Section 8.
NFPA:
Health: 2
Flammability: 0
Reactivity: 0
Symbol: oxy
Potential Health Effects:
Eye Contact: Causes eye burns.
Skin Contact: Causes burns. May cause allergic reaction
Skin Absorption: None reported
Target Organs: None reported
Ingestion: May cause: gastrointestinal irritation
Target Organs: None reported
Inhalation: Causes: irritation of nose and throat
Target Organs: None reported
Medical Conditions Aggravated: Pre-existing: Skin conditions Eye conditions Allergies or sensitivity to potassium persulfate.
Chronic Effects: None reported
Cancer / Reproductive Toxicity Information:
O.S.H.A. Listed: No

IARC Listed: No

NTP Listed: No

Additional Cancer / Reproductive Toxicity Information: None reported
Toxicologically Synergistic Products: None reported

4. FIRST AID

Eye Contact: Immediately flush eyes with water for 15 minutes. Call physician.
Skin Contact (First Aid): Wash skin with plenty of water for 15 minutes. Remove contaminated clothing. Call physician immediately.
Ingestion (First Aid): Do not induce vomiting. Give 1-2 glasses of water. Call physician immediately. Never give anything by mouth to an unconscious person.
Inhalation: Remove to fresh air. Give artificial respiration if necessary. Call physician.

5. FIRE FIGHTING MEASURES

Flammable Properties: Strong oxidizer. Contact with combustible materials may cause a fire. During a fire, this product decomposes to form toxic gases.
Flash Point: Not Determined
Method: Not applicable
Flammability Limits:
Lower Explosion Limits: Not Applicable
Upper Explosion Limits: Not Applicable
Autoignition Temperature: Not Determined
Hazardous Combustion Products: This material will not burn.
Fire / Explosion Hazards: May react violently with: oxidizable materials
Static Discharge: None reported.
Mechanical Impact: None reported
Extinguishing Media: Water.

Fire Fighting Instruction: As in any fire, wear self-contained breathing apparatus pressure-demand and full protective gear. Evacuate area and fight fire from a safe distance.

6. ACCIDENTAL RELEASE MEASURES

Spill Response Notice:
Only persons properly qualified to respond to an emergency involving hazardous substances may respond to a spill according to federal regulations (OSHA 29 CFR 1910.120(a)(v)) and per your company's emergency response plan and guidelines/procedures. See Section 13, Special Instructions for disposal assistance.
Containment Technique: Stop spilled material from being released to the environment. Cover spilled solid material with sand or other inert material.
Clean-up Technique: Cover with an inert material, such as sand. Sweep up material. Work in an approved fume hood. Working in small batches, dilute with excess water. Adjust to a pH between 6 and 9 with an alkali, such as soda ash or sodium bicarbonate. Filter to remove solids. Flush reacted material to the drain with a large excess of water. Decontaminate the area of the spill with a soap solution.
Evacuation Procedure: Evacuate local area (15 foot radius or as directed by your facility's emergency response plan) when: a pound or more of loose powder is spilled. If conditions warrant, increase the size of the evacuation.
Special Instructions (for accidental release): Product is regulated as RCRA hazardous waste.
304 EHS RQ (40 CFR 355): Not applicable
D.O.T. Emergency Response Guide Number: 154

7. HANDLING / STORAGE

Handling: Avoid contact with eyes skin Do not breathe dust. Wash thoroughly after handling. Maintain general industrial hygiene practices when using this product.
Storage: Keep away from: reducers oxidizable materials Protect from: moisture heat
Flammability Class: Not applicable

8. EXPOSURE CONTROLS / PROTECTIVE EQUIPMENT

Engineering Controls: Have an eyewash station nearby. Use a fume hood to avoid exposure to dust, mist or vapor.
Personal Protective Equipment:
Eye Protection: safety glasses with top and side shields
Skin Protection: lab coat disposable latex gloves
Inhalation Protection: laboratory fume hood
Precautionary Measures: Avoid contact with: eyes skin Do not breathe: dust Wash thoroughly after handling. Keep away from: oxidizable materials reducers
TLV: Not Established
PEL: Not Established

9. PHYSICAL / CHEMICAL PROPERTIES

Appearance: White powder
Physical State: Solid
Molecular Weight: 614.9
Odor: None
pH: 1% solution = 2.3; 3% solution = 2.0
Vapor Pressure: Nil
Vapor Density (air = 1): Not Determined
Boiling Point: Not Determined
Melting Point: Decomposes
Specific Gravity (water = 1): 1.1 - 1.4

Evaporation Rate (water = 1): Not Applicable
Volatile Organic Compounds Content: Not Applicable
Partition Coefficient (n-octanol / water): Not Applicable
Solubility:
Water: Soluble
Acid: Not Determined
Other: Not Determined
Metal Corrosivity:
Steel: Not Determined
Aluminum: Not Determined

10. STABILITY / REACTIVITY

Chemical Stability: Stable when stored under proper conditions.
Conditions to Avoid: Excess moisture Exposure to air. Heating to decomposition.
Reactivity / Incompatibility: May react violently in contact with: oxidizable material reducers
Hazardous Decomposition: Heating to decomposition releases: oxygen sulfur oxides
Hazardous Polymerization: Will not occur.

11. TOXICOLOGICAL INFORMATION

Product Toxicological Data:
LD50: Oral rat LD50 = 2000 mg/kg.
LC50: Inhalation rat LC50 > 5 mg/l/4H.
Dermal Toxicity Data: Skin rabbit LD50 > 11,000 mg/kg.
Skin and Eye Irritation Data: None Reported
Mutation Data: None Reported
Reproductive Effects Data: None Reported
Ingredient Toxicological Data: Not Applicable
Not applicable

12. ECOLOGICAL INFORMATION

Product Ecological Information: --
No ecological data available for this product.
Ingredient Ecological Information: --
Not applicable

13. DISPOSAL CONSIDERATIONS

EPA Waste ID Number: None
Special Instructions (Disposal): Work in an approved fume hood. Dilute material with excess water making a weaker than 5% solution. Adjust to a pH between 6 and 9 with an alkali, such as soda ash or sodium bicarbonate. Open cold water tap completely, slowly pour the reacted material to the drain.
Empty Containers: Rinse three times with an appropriate solvent. Dispose of empty container as normal trash. Rinsate from empty containers may contain sufficient product to require disposal as hazardous waste.
NOTICE (Disposal): These disposal guidelines are based on federal regulations and may be superseded by more stringent state or local requirements. Please consult your local environmental regulators for more information.

14. TRANSPORT INFORMATION

D.O.T.:
D.O.T. Proper Shipping Name: Corrosive Solid, Acidic, Inorganic, N.O.S.

Potassium Monopersulfate
DOT Hazard Class: 8
DOT Subsidiary Risk: NA
DOT ID Number: UN3260
DOT Packing Group: III
I.C.A.O.:
I.C.A.O. Proper Shipping Name: Corrosive Solid, Acidic, Inorganic, N.O.S.
Potassium Monopersulfate
ICAO Hazard Class: 8
ICAO Subsidiary Risk: NA
ICAO ID Number: UN3260
ICAO Packing Group: III
I.M.O.:
I.M.O. Proper Shipping Name: Corrosive Solid, Acidic, Inorganic, N.O.S.
Potassium Monopersulfate
I.M.O. Hazard Class: 8
I.M.O. Subsidiary Risk: NA
I.M.O. ID Number: UN3260
I.M.O. Packing Group: III
Additional Information: There is a possibility that this product could be contained in a reagent set or kit composed of various compatible dangerous goods. If the item is NOT in a set or kit, the classification given above applies. If the item IS part of a set or kit, the classification would change to the following: UN3316 Chemical Kit, Class 9, PG II or III. If the item is not regulated, the Chemical Kit classification does not apply.

15. REGULATORY INFORMATION

U.S. Federal Regulations:
O.S.H.A.: This product meets the criteria for a hazardous substance as defined in the Hazard Communication Standard. (29 CFR 1910.1200)
E.P.A.:
S.A.R.A. Title III Section 311/312 Categorization (40 CFR 370): Immediate (Acute) Health Hazard Fire Hazard
S.A.R.A. Title III Section 313 (40 CFR 372): This product does NOT contain any chemical subject to the reporting requirements of Section 313 of Title III of SARA.
--
302 (EHS) TPQ (40 CFR 355): Not applicable
304 CERCLA RQ (40 CFR 302.4): Not applicable
304 EHS RQ (40 CFR 355): Not applicable
Clean Water Act (40 CFR 116.4): Not applicable
RCRA: Contains RCRA regulated substances. See Section 13, EPA Waste ID Number.
C.P.S.C.: Not applicable
State Regulations:
California Prop. 65: No Prop. 65 listed chemicals are present in this product.
Identification of Prop. 65 Ingredient(s): Not Applicable
California Perchlorate Rule CCR Title 22 Chap 33:
Trade Secret Registry: Not applicable
National Inventories:
U.S. Inventory Status: All ingredients in this product are listed on the TSCA 8(b) Inventory (40 CFR 710).
TSCA CAS Number: Not Applicable

16. OTHER INFORMATION

Intended Use: Laboratory Reagent

References: TLV's Threshold Limit Values and Biological Exposure Indices for 1992-1993. American Conference of Governmental Industrial Hygienists, 1992. The Merck Index, 11th Ed. Rahway, New Jersey: Merck and Co., Inc., 1989. Technical Judgment. Sax, N. Irving. Dangerous Properties of Industrial Materials, 7th Ed. New York: Van Nostrand Reinhold Co., 1989. List of Dangerous Substances Classified in Annex I of the EEC Directive (67/548) - Classification, Packaging and Labeling of Dangerous Substances, Amended July 1992. In-house information. Fire Protection Guide on Hazardous Materials, 10th Ed. Quincy, MA: National Fire Protection Fire Protection Guide on Hazardous Materials, 10th Ed. Quincy, MA: National Fire Protection Association, 1991. CCINFO RTECS. Canadian Centre for Occupational Health and Safety. Hamilton, Ontario Canada: 30 June 1993. CCINFO MSDS/FTSS. Canadian Centre for Occupational Health and Safety. Hamilton, Ontario Canada: 30 June 1993. Air Contaminants, Federal Register, Vol. 54, No. 12. Thursday, January 19, 1989. pp. 2332-2983. 29 CFR 1900 - 1910 (Code of Federal Regulations - Labor).
Revision Summary: Updates in Section(s) 14,

Legend:

NA - Not Applicable	w/w - weight/weight
ND - Not Determined	w/v - weight/volume
NV - Not Available	v/v - volume/volume

USER RESPONSIBILITY: Each user should read and understand this information and incorporate it in individual site safety programs in accordance with applicable hazard communication standards and regulations.

THE INFORMATION CONTAINED HEREIN IS BASED ON DATA CONSIDERED TO BE ACCURATE. HOWEVER, NO WARRANTY IS EXPRESSED OR IMPLIED REGARDING THE ACCURACY OF THESE DATA OR THE RESULTS TO BE OBTAINED FROM THE USE THEREOF.

World Headquarters
Hach Company
P.O.Box 389
Loveland, CO USA 80539
(970) 669-3050

MSDS No: M01888

MATERIAL SAFETY DATA SHEET

1. CHEMICAL PRODUCT AND COMPANY IDENTIFICATION

Product Name: Arsenic Reagent #3
Catalog Number: 2797999

Hach Company
P.O.Box 389
Loveland, CO USA 80539
(970) 669-3050

Emergency Telephone Numbers:
(Medical and Transportation)
(303) 623-5716 24 Hour Service
(515)232-2533 8am - 4pm CST

MSDS Number: M01888
Chemical Name: Not applicable
CAS No.: Not applicable
Chemical Formula: Not applicable
Chemical Family: Not applicable
Hazard: May cause irritation.
Date of MSDS Preparation:
Day: 25
Month: August
Year: 2007

2. COMPOSITION / INFORMATION ON INGREDIENTS

Ethylenediaminetetraacetic Acid, Disodium Salt
CAS No.: 6381-92-6
TSCA CAS Number: 139-33-3
Percent Range: < 55
Percent Range Units: weight / weight
LD50: Oral rat LD50 = 2000 mg/kg
LC50: None reported
TLV: Not established
PEL: Not established
Hazard: May cause irritation.

EDTA Tetrasodium Salt
CAS No.: 64-02-8
TSCA CAS Number: 64-02-8
Percent Range: < 55
Percent Range Units: weight / weight
LD50: None reported
LC50: None reported
TLV: Not established
PEL: Not established
Hazard: May cause irritation.

3. HAZARDS IDENTIFICATION

Emergency Overview:
Appearance: White crystals
Odor: None
MAY CAUSE EYE, SKIN AND RESPIRATORY TRACT IRRITATION

HMIS:
Health: 1
Flammability: 0
Reactivity: 0
Protective Equipment: X - See protective equipment, Section 8.
NFPA:
Health: 1
Flammability: 0
Reactivity: 0
Symbol: Not applicable
Potential Health Effects:
Eye Contact: May cause irritiation
Skin Contact: May cause irritiation
Skin Absorption: None reported
Target Organs: None reported
Ingestion: May cause: irritation of the mouth and esophagus calcium deficiency in the blood gastrointestinal irritation Very large doses may cause: kidney damage
Target Organs: Kidneys
Inhalation: May cause: irritation of nose and throat
Target Organs: None reported
Medical Conditions Aggravated: None reported
Chronic Effects: None reported
Cancer / Reproductive Toxicity Information:
O.S.H.A. Listed: No

IARC Listed: No

NTP Listed: No

Additional Cancer / Reproductive Toxicity Information: None reported
Toxicologically Synergistic Products: None reported

4. FIRST AID

Eye Contact: Immediately flush eyes with water for 15 minutes. Call physician.
Skin Contact (First Aid): Wash skin with soap and plenty of water. Call physician if irritation develops.
Ingestion (First Aid): Give large quantities of water. Call physician immediately.
Inhalation: Remove to fresh air.

5. FIRE FIGHTING MEASURES

Flammable Properties: Combustion generates toxic fumes.
Flash Point: Not applicable
Method: Not applicable
Flammability Limits:
Lower Explosion Limits: Not applicable
Upper Explosion Limits: Not applicable

Autoignition Temperature: Not determined
Hazardous Combustion Products: Toxic fumes of: sodium oxides carbon monoxide, carbon dioxide. nitrogen oxides.
Fire / Explosion Hazards: None reported
Static Discharge: None reported.
Mechanical Impact: None reported
Extinguishing Media: Use media appropriate to surrounding fire conditions
Fire Fighting Instruction: As in any fire, wear self-contained breathing apparatus pressure-demand and full protective gear.

6. ACCIDENTAL RELEASE MEASURES

Spill Response Notice:
Only persons properly qualified to respond to an emergency involving hazardous substances may respond to a spill according to federal regulations (OSHA 29 CFR 1910.120(a)(v)) and per your company's emergency response plan and guidelines/procedures. See Section 13, Special Instructions for disposal assistance.
Containment Technique: Stop spilled material from being released to the environment.
Clean-up Technique: Scoop up spilled material into a large beaker and dissolve with water. Adjust to a pH between 6 and 9. Use sulfuric or citric acid to lower pH. Use soda ash or sodium bicarbonate to increase pH. Flush reacted material to the drain with a large excess of water. Decontaminate the area of the spill with a soap solution.
Evacuation Procedure: Evacuate local area (15 foot radius or as directed by your facility's emergency response plan) when: a pound or more of loose powder is spilled. If conditions warrant, increase the size of the evacuation.
Special Instructions (for accidental release): Not applicable
304 EHS RQ (40 CFR 355): Not applicable
D.O.T. Emergency Response Guide Number: None

7. HANDLING / STORAGE

Handling: Avoid contact with eyes skin Do not breathe dust. Wash thoroughly after handling. Maintain general industrial hygiene practices when using this product.
Storage: Protect from: oxidizers heat moisture
Flammability Class: Not applicable

8. EXPOSURE CONTROLS / PROTECTIVE EQUIPMENT

Engineering Controls: Maintain general industrial hygiene practices when using this product.
Personal Protective Equipment:
Eye Protection: safety glasses with top and side shields
Skin Protection: disposable latex gloves lab coat
Inhalation Protection: adequate ventilation
Precautionary Measures: Avoid contact with: eyes skin Do not breathe: dust Wash thoroughly after handling. Keep away from: oxidizers heat moisture
TLV: Not established
PEL: Not established

9. PHYSICAL / CHEMICAL PROPERTIES

Appearance: White crystals
Physical State: Solid
Molecular Weight: Not applicable
Odor: None
pH: Not determined

Vapor Pressure: Not determined
Vapor Density (air = 1): Not determined
Boiling Point: Not determined
Melting Point: Not determined
Specific Gravity (water = 1): Not determined
Evaporation Rate (water = 1): Not determined
Volatile Organic Compounds Content: Not determined
Partition Coefficient (n-octanol / water): Not determined
Solubility:
Water: Soluble
Acid: Soluble
Other: Not determined
Metal Corrosivity:
Steel: Not determined
Aluminum: Not determined

10. STABILITY / REACTIVITY

Chemical Stability: Stable when stored under proper conditions.
Conditions to Avoid: Extreme temperatures Excess moisture
Reactivity / Incompatibility: May react violently in contact with: oxidizers
Hazardous Decomposition: Toxic fumes of: nitrogen oxides carbon dioxide carbon monoxide sodium oxides
Hazardous Polymerization: Will not occur.

11. TOXICOLOGICAL INFORMATION

Product Toxicological Data:
LD50: None reported
LC50: None reported
Dermal Toxicity Data: None reported
Skin and Eye Irritation Data: EDTA Tetrasodium Salt: Skin rabbit 500mg/24H, MODERATE; Eye rabbit 1900µg; Eye rabbit 100mg/24H, MODERATE.
Mutation Data: EDTA Disodium Salt: Cytogenetic analysis Hamster lung at 200mg/L.
Reproductive Effects Data: None reported
Ingredient Toxicological Data: EDTA Disodium Salt: Oral rat LD50 = 2000 mg/kg

12. ECOLOGICAL INFORMATION

Product Ecological Information: --
No ecological data available for this product.
Ingredient Ecological Information: EDTA Tetrasodium Salt: BOD 0.02 g/g; COD 0.54 g/g; Fish toxicity: Bluegill LC50 = 410 mg/l for 96 hours.

13. DISPOSAL CONSIDERATIONS

EPA Waste ID Number: None
Special Instructions (Disposal): Dilute material with excess water making a weaker than 5% solution. Adjust to a pH between 6 and 9 with an alkali, such as soda ash or sodium bicarbonate. Open cold water tap completely, slowly pour the reacted material to the drain.
Empty Containers: Rinse three times with an appropriate solvent. Dispose of empty container as normal trash.

NOTICE (Disposal): These disposal guidelines are based on federal regulations and may be superseded by more stringent state or local requirements. Please consult your local environmental regulators for more information.

14. TRANSPORT INFORMATION

D.O.T.:
D.O.T. Proper Shipping Name: Not Currently Regulated
--
DOT Hazard Class: NA
DOT Subsidiary Risk: NA
DOT ID Number: NA
DOT Packing Group: NA
I.C.A.O.:
I.C.A.O. Proper Shipping Name: Not Currently Regulated
--
ICAO Hazard Class: NA
ICAO Subsidiary Risk: NA
ICAO ID Number: NA
ICAO Packing Group: NA
I.M.O.:
I.M.O. Proper Shipping Name: Not Currently Regulated
--
I.M.O. Hazard Class: NA
I.M.O. Subsidiary Risk: NA
I.M.O. ID Number: NA
I.M.O. Packing Group: NA
Additional Information: There is a possibility that this product could be contained in a reagent set or kit composed of various compatible dangerous goods. If the item is NOT in a set or kit, the classification given above applies. If the item IS part of a set or kit, the classification would change to the following: UN3316 Chemical Kit, Class 9, PG II or III. If the item is not regulated, the Chemical Kit classification does not apply.

15. REGULATORY INFORMATION

U.S. Federal Regulations:
O.S.H.A.: This product meets the criteria for a hazardous substance as defined in the Hazard Communication Standard. (29 CFR 1910.1200)
E.P.A.:
S.A.R.A. Title III Section 311/312 Categorization (40 CFR 370): Immediate (Acute) Health Hazard
S.A.R.A. Title III Section 313 (40 CFR 372): This product does NOT contain any chemical subject to the reporting requirements of Section 313 of Title III of SARA.
--
302 (EHS) TPQ (40 CFR 355): Not applicable
304 CERCLA RQ (40 CFR 302.4): Not applicable
304 EHS RQ (40 CFR 355): Not applicable
Clean Water Act (40 CFR 116.4): Not applicable
RCRA: Contains no RCRA regulated substances.
C.P.S.C.: Not applicable
State Regulations:
California Prop. 65: No Prop. 65 listed chemicals are present in this product.
Identification of Prop. 65 Ingredient(s): None
California Perchlorate Rule CCR Title 22 Chap 33:
Trade Secret Registry: Not applicable
National Inventories:
U.S. Inventory Status: All ingredients in this product are listed on the TSCA 8(b) Inventory (40 CFR 710).

TSCA CAS Number: Not applicable

16. OTHER INFORMATION

Intended Use: Laboratory Reagent

References: TLV's Threshold Limit Values and Biological Exposure Indices for 1992-1993. American Conference of Governmental Industrial Hygienists, 1992. The Merck Index, 11th Ed. Rahway, New Jersey: Merck and Co., Inc., 1989. Technical Judgment. Sax, N. Irving. Dangerous Properties of Industrial Materials, 7th Ed. New York: Van Nostrand Reinhold Co., 1989. In-house information. Fire Protection Guide on Hazardous Materials, 10th Ed. Quincy, MA: National Fire Protection Fire Protection Guide on Hazardous Materials, 10th Ed. Quincy, MA: National Fire Protection Association, 1991. CCINFO RTECS. Canadian Centre for Occupational Health and Safety. Hamilton, Ontario Canada: 30 June 1993. CCINFO MSDS/FTSS. Canadian Centre for Occupational Health and Safety. Hamilton, Ontario Canada: 30 June 1993. Air Contaminants, Federal Register, Vol. 54, No. 12. Thursday, January 19, 1989. pp. 2332-2983. 29 CFR 1900 - 1910 (Code of Federal Regulations - Labor).

Revision Summary: Updates in Section(s) 14,

Legend:

NA - Not Applicable	w/w - weight/weight
ND - Not Determined	w/v - weight/volume
NV - Not Available	v/v - volume/volume

USER RESPONSIBILITY: Each user should read and understand this information and incorporate it in individual site safety programs in accordance with applicable hazard communication standards and regulations.

THE INFORMATION CONTAINED HEREIN IS BASED ON DATA CONSIDERED TO BE ACCURATE. HOWEVER, NO WARRANTY IS EXPRESSED OR IMPLIED REGARDING THE ACCURACY OF THESE DATA OR THE RESULTS TO BE OBTAINED FROM THE USE THEREOF.

World Headquarters
Hach Company
P.O.Box 389
Loveland, CO USA 80539
(970) 669-3050

MSDS No: M00007

MATERIAL SAFETY DATA SHEET

1. CHEMICAL PRODUCT AND COMPANY IDENTIFICATION

Product Name: Arsenic Reagent #4
Catalog Number: 45429

Hach Company
P.O.Box 389
Loveland, CO USA 80539
(970) 669-3050

Emergency Telephone Numbers:
(Medical and Transportation)
(303) 623-5716 24 Hour Service
(515)232-2533 8am - 4pm CST

MSDS Number: M00007
Chemical Name: Sulfamic Acid
CAS No.: 5329-14-6
Chemical Formula: H_3NO_3S
Chemical Family: Inorganic Acid
Hazard: Causes eye burns.
Date of MSDS Preparation:
Day: 25
Month: 06
Year: 2010

2. COMPOSITION / INFORMATION ON INGREDIENTS

Other component
CAS No.: Not applicable
TSCA CAS Number: Not applicable
Percent Range: < 1.0
Percent Range Units: weight / weight
LD50: Not applicable
LC50: Not applicable
TLV: Not established
PEL: Not established
Hazard: Any ingredient(s) of this product listed as "Other component(s)" is not considered a health hazard to the user of this product.

Sulfamic Acid
CAS No.: 5329-14-6
TSCA CAS Number: 5329-14-6
Percent Range: > 99.0
Percent Range Units: weight / weight
LD50: Oral rat LD50 = 3160 mg/kg.
LC50: None reported
TLV: Not established
PEL: Not established
Hazard: Causes eye burns.

3. HAZARDS IDENTIFICATION

Emergency Overview:
Appearance: White crystals

Odor: None
CAUSES EYE BURNS CAUSES SKIN AND RESPIRATORY TRACT IRRITATION

HMIS:
Health: 2
Flammability: 1
Reactivity: 1
Protective Equipment: X - See protective equipment, Section 8.

NFPA:
Health: 2
Flammability: 1
Reactivity: 1
Symbol: Not applicable

Potential Health Effects:
Eye Contact: Causes eye burns.
Skin Contact: Causes severe irritation
Skin Absorption: None reported
Target Organs: None reported
Ingestion: May cause: irritation of the mouth and esophagus gastrointestinal irritation
Target Organs: None reported
Inhalation: May cause: irritation of nose and throat
Target Organs: None reported
Medical Conditions Aggravated: Pre-existing: Eye conditions Skin conditions Respiratory conditions
Chronic Effects: None reported
Cancer / Reproductive Toxicity Information:
O.S.H.A. Listed: No
IARC Listed: No
NTP Listed: No
Additional Cancer / Reproductive Toxicity Information: Not applicable

Toxicologically Synergistic Products: None reported

4. FIRST AID

Eye Contact: Immediately flush eyes with water for 15 minutes. Call physician.
Skin Contact (First Aid): Wash skin with plenty of water for 15 minutes. Call physician immediately.
Ingestion (First Aid): Do not induce vomiting. Give 1-2 glasses of water. Call physician immediately. Never give anything by mouth to an unconscious person.
Inhalation: Remove to fresh air.

5. FIRE FIGHTING MEASURES

Flammable Properties: During a fire, irritating and highly toxic gases may be generated by thermal decomposition.
Flash Point: Not applicable
Method: Not applicable
Flammability Limits:
Lower Explosion Limits: Not applicable
Upper Explosion Limits: Not applicable
Autoignition Temperature: Not applicable
Hazardous Combustion Products: Toxic fumes of: ammonia nitrogen oxides. sulfur oxides.
Fire / Explosion Hazards: May react violently with: chlorine / chlorine compounds metal nitrates metal nitrites nitric acid
Static Discharge: None reported.
Mechanical Impact: None reported
Extinguishing Media: Dry chemical. Water.
Fire Fighting Instruction: As in any fire, wear self-contained breathing apparatus pressure-demand and full protective gear.

6. ACCIDENTAL RELEASE MEASURES

Spill Response Notice:

Only persons properly qualified to respond to an emergency involving hazardous substances may respond to a spill according to federal regulations (OSHA 29 CFR 1910.120(a)(v)) and per your company's emergency response plan and guidelines/procedures. See Section 13, Special Instructions for disposal assistance.
Containment Technique: Stop spilled material from being released to the environment. Cover spilled solid material with sand or other inert material.
Clean-up Technique: Scoop up spilled material into a large beaker and dissolve with water. Adjust to a pH between 6 and 9 with an alkali, such as soda ash or sodium bicarbonate. Flush reacted material to the drain with a large excess of water. Decontaminate the area of the spill with a soap solution.
Evacuation Procedure: Evacuate local area (15 foot radius or as directed by your facility's emergency response plan) when: a pound or more of loose powder is spilled. If conditions warrant, increase the size of the evacuation.
Special Instructions (for accidental release): Product is regulated as RCRA hazardous waste in the U.S.
304 EHS RQ (40 CFR 355): Not applicable
D.O.T. Emergency Response Guide Number: 154

7. HANDLING / STORAGE

Handling: Avoid contact with eyes skin Do not breathe dust. Maintain general industrial hygiene practices when using this product.
Storage: Store away from: oxidizers alkalies chlorine/chlorinated metals Protect from: heat moisture
Flammability Class: Not applicable

8. EXPOSURE CONTROLS / PROTECTIVE EQUIPMENT

Engineering Controls: Have an eyewash station nearby. Maintain general industrial hygiene practices when using this product.
Personal Protective Equipment:
Eye Protection: safety glasses with top and side shields
Skin Protection: disposable latex gloves lab coat
Inhalation Protection: adequate ventilation
Precautionary Measures: Avoid contact with: eyes skin Do not breathe: dust Wash thoroughly after handling. Keep away from: alkalies metals Protect from: heat moisture
TLV: Not established
PEL: Not established

9. PHYSICAL / CHEMICAL PROPERTIES

Appearance: White crystals
Physical State: Solid
Molecular Weight: 97.10
Odor: None
pH: 1% soln = 1.18
Vapor Pressure: Not applicable
Vapor Density (air = 1): Not applicable
Boiling Point: Not applicable
Melting Point: Product decomposes at 205 °C; 401 °F
Specific Gravity/ Relative Density (water = 1; air =1): 2.15
Evaporation Rate (water = 1): Not applicable
Volatile Organic Compounds Content: Not applicable
Partition Coefficient (n-octanol / water): None reported
Solubility:
Water: 1:2 ratio @ 80 ° C (176 °F)
Acid: Soluble
Other: Slightly soluble in alcohol, methanol.
Metal Corrosivity:
Steel: 0.814 in/yr
Aluminum: 0.212 in/yr

10. STABILITY / REACTIVITY

Chemical Stability: Stable when stored under proper conditions.

Conditions to Avoid: Heating to decomposition. Excess moisture
Reactivity / Incompatibility: May react violently in contact with: chlorates metal nitrates metal nitrites nitric acid
Incompatible with: alkalies oxidizers
Hazardous Decomposition: Heating to decomposition releases toxic and/or corrosive fumes of: ammonia nitrogen oxides sulfur oxides
Hazardous Polymerization: Will not occur.

11. TOXICOLOGICAL INFORMATION

Product Toxicological Data:
LD50: Oral rat LD50 = 3160 mg/kg.
LC50: None reported
Dermal Toxicity Data: None reported
Skin and Eye Irritation Data: Skin Human 4%/5 days intermittent MILD, Skin rabbit 500 mg/24H SEVERE, Eye rabbit 20mg MODERATE, Eye rabbit 250µg/24H SEVERE.
Mutation Data: None reported
Reproductive Effects Data: None reported
Ingredient Toxicological Data: --
Not applicable

12. ECOLOGICAL INFORMATION

Product Ecological Information: --
No ecological data available for this product.
Ingredient Ecological Information: --
Not applicable

13. DISPOSAL CONSIDERATIONS

EPA Waste ID Number: None
Special Instructions (Disposal): Dilute to 3 to 5 times the volume with cold water. Adjust to a pH between 6 and 9 with an alkali, such as soda ash or sodium bicarbonate. Open cold water tap completely, slowly pour the reacted material to the drain.
Empty Containers: Rinse three times with an appropriate solvent. Dispose of empty container as normal trash.
NOTICE (Disposal): These disposal guidelines are based on federal regulations and may be superseded by more stringent state or local requirements. Please consult your local environmental regulators for more information.

14. TRANSPORT INFORMATION

D.O.T.:
D.O.T. Proper Shipping Name: Sulphamic Acid
--
DOT Hazard Class: 8
DOT Subsidiary Risk: NA
DOT ID Number: UN2967
DOT Packing Group: III
I.C.A.O.:
I.C.A.O. Proper Shipping Name: Sulphamic Acid
--
ICAO Hazard Class: 8
ICAO Subsidiary Risk: NA
ICAO ID Number: UN2967
ICAO Packing Group: III
I.M.O.:
I.M.O. Proper Shipping Name: Sulphamic Acid
--
I.M.O. Hazard Class: 8
I.M.O. Subsidiary Risk: NA
I.M.O. ID Number: UN2967
I.M.O. Packing Group: III

Additional Information: There is a possibility that this product could be contained in a reagent set or kit composed of various compatible dangerous goods. If the item is NOT in a set or kit, the classification given above applies. If the item IS part of a set or kit, the classification would change to the following: UN3316 Chemical Kit, Class 9, PG II or III. If the item is not regulated, the Chemical Kit classification does not apply.

15. REGULATORY INFORMATION

U.S. Federal Regulations:

O.S.H.A.: This product meets the criteria for a hazardous substance as defined in the Hazard Communication Standard. (29 CFR 1910.1200)

E.P.A.:

S.A.R.A. Title III Section 311/312 Categorization (40 CFR 370): Immediate (Acute) Health Hazard

S.A.R.A. Title III Section 313 (40 CFR 372): This product does NOT contain any chemical subject to the reporting requirements of Section 313 of Title III of SARA.

--

302 (EHS) TPQ (40 CFR 355): Not applicable

304 CERCLA RQ (40 CFR 302.4): Not applicable

304 EHS RQ (40 CFR 355): Not applicable

Clean Water Act (40 CFR 116.4): Not applicable

RCRA: Contains no RCRA regulated substances.

C.P.S.C.: Not applicable

State Regulations:

California Prop. 65: No Prop. 65 listed chemicals are present in this product.

Identification of Prop. 65 Ingredient(s): Not applicable

California Perchlorate Rule CCR Title 22 Chap 33:

Trade Secret Registry: Not applicable

National Inventories:

U.S. Inventory Status: TSCA Listed: Yes

TSCA CAS Number: 5329-14-6

16. OTHER INFORMATION

Intended Use: Laboratory Use

References: Vendor Information. NIOSH Registry of Toxic Effects of Chemical Substances, 1985-86. Cincinnati: U.S. Department of Health and Human Services, April, 1987. Gosselin, R. E. et al. Clinical Toxicology of Commercial Products, 5th Ed. Baltimore: The Williams and Wilkins Co., 1984. Fire Protection Guide on Hazardous Materials, 10th Ed. Quincy, MA: National Fire Protection Fire Protection Guide on Hazardous Materials, 10th Ed. Quincy, MA: National Fire Protection Association, 1991. Outside Testing. Technical Judgment. The Merck Index, 11th Ed. Rahway, New Jersey: Merck and Co., Inc., 1989. Sax, N. Irving. Dangerous Properties of Industrial Materials, 7th Ed. New York: Van Nostrand Reinhold Co., 1989. Air Contaminants, Federal Register, Vol. 54, No. 12. Thursday, January 19, 1989. pp. 2332-2983. TLV's Threshold Limit Values and Biological Exposure Indices for 1992-1993. American Conference of Governmental Industrial Hygienists, 1992.

Revision Summary: Updates in Section(s) 14,

Legend:

NA - Not Applicable	w/w - weight/weight
ND - Not Determined	w/v - weight/volume
NV - Not Available	v/v - volume/volume

USER RESPONSIBILITY: Each user should read and understand this information and incorporate it in individual site safety programs in accordance with applicable hazard communication standards and regulations.

THE INFORMATION CONTAINED HEREIN IS BASED ON DATA CONSIDERED TO BE ACCURATE. HOWEVER, NO WARRANTY IS EXPRESSED OR IMPLIED REGARDING THE ACCURACY OF THESE DATA OR THE RESULTS TO BE OBTAINED FROM THE USE THEREOF.

World Headquarters
Hach Company
P.O.Box 389
Loveland, CO USA 80539
(970) 669-3050

MSDS No: M01157

MATERIAL SAFETY DATA SHEET

1. CHEMICAL PRODUCT AND COMPANY IDENTIFICATION

Product Name: Arsenic Reagent #5
Catalog Number: 2798199

Hach Company
P.O.Box 389
Loveland, CO USA 80539
(970) 669-3050

Emergency Telephone Numbers:
(Medical and Transportation)
(303) 623-5716 24 Hour Service
(515)232-2533 8am - 4pm CST

MSDS Number: M01157
Chemical Name: Zinc
CAS No.: 7440-66-6
Chemical Formula: Zn
Chemical Family: Inorganic Metals
Hazard: Flammable solid. Finely divided dust may be flammable or explosive. May cause irritation.
Date of MSDS Preparation:
Day: 18
Month: February
Year: 2009

2. COMPOSITION / INFORMATION ON INGREDIENTS

Zinc
CAS No.: 7440-66-6
TSCA CAS Number: 4770-66-6
Percent Range: > 99.0
Percent Range Units: weight / weight
LD50: None reported
LC50: None reported
TLV: 5 mg/m^3 (ZnO)
PEL: 5 mg/m^3 (ZnO)
Hazard: Flammable solid. Finely divided dust may be flammable or explosive. May cause irritation.

Impurities
CAS No.: Not applicable
TSCA CAS Number: Not applicable
Percent Range: < 1.0
Percent Range Units: weight / weight
LD50: None reported.
LC50: None reported.
TLV: Not established.
PEL: Not established.
Hazard: Not applicable

3. HAZARDS IDENTIFICATION

Emergency Overview:
Appearance: Bluish-gray powder
Odor: None
MAY CAUSE EYE, SKIN AND RESPIRATORY TRACT IRRITATION

FLAMMABLE SOLID DANGEROUS WHEN EXPOSED TO HEAT, FLAMES OR OXIDIZERS

HMIS:
Health: 1
Flammability: 1
Reactivity: 1
Protective Equipment: X - See protective equipment, Section 8.
NFPA:
Health: 1
Flammability: 1
Reactivity: 1
Symbol: Not applicable
Potential Health Effects:
Eye Contact: May cause irritiation
Skin Contact: Causes mild irritation
Skin Absorption: No effects anticipated
Target Organs: Not applicable
Ingestion: Very large doses may cause: thirst sweating gastrointestinal irritation abdominal pain
Target Organs: None reported
Inhalation: May cause: irritation of nose and throat coughing difficult breathing sweating
Target Organs: None reported
Medical Conditions Aggravated: Pre-existing: Skin conditions
Chronic Effects: None reported
Cancer / Reproductive Toxicity Information:
O.S.H.A. Listed: No

IARC Listed: No

NTP Listed: No

Additional Cancer / Reproductive Toxicity Information: None reported
Toxicologically Synergistic Products: None reported

4. FIRST AID

Eye Contact: Immediately flush eyes with water for 15 minutes. Call physician if irritation develops.
Skin Contact (First Aid): Wash skin with plenty of water.
Ingestion (First Aid): Give large quantities of water. Call physician immediately.
Inhalation: Remove to fresh air.

5. FIRE FIGHTING MEASURES

Flammable Properties: During a fire, irritating and highly toxic gases may be generated by thermal decomposition.
Flash Point: Not determined
Method: Not applicable
Flammability Limits:
Lower Explosion Limits: Not applicable
Upper Explosion Limits: Not applicable

Autoignition Temperature: Not determined
Hazardous Combustion Products: zinc oxide
Fire / Explosion Hazards: Finely divided dust may form a flammable or explosive mixture with air. May form explosive mixtures with: oxidizers
Static Discharge: None reported.
Mechanical Impact: None reported
Extinguishing Media: Sand or inert dry powder Do NOT use water.
Fire Fighting Instruction: As in any fire, wear self-contained breathing apparatus pressure-demand and full protective gear.

6. ACCIDENTAL RELEASE MEASURES

Spill Response Notice:
Only persons properly qualified to respond to an emergency involving hazardous substances may respond to a spill according to federal regulations (OSHA 29 CFR 1910.120(a)(v)) and per your company's emergency response plan and guidelines/procedures. See Section 13, Special Instructions for disposal assistance.
Containment Technique: Stop spilled material from being released to the environment.
Clean-up Technique: Sweep up material. Dispose of material in an E.P.A. approved hazardous waste facility. Decontaminate the area of the spill with a soap solution.
Evacuation Procedure: Evacuate as needed to perform spill clean-up. If conditions warrant, increase the size of the evacuation.
Special Instructions (for accidental release): Not applicable
304 EHS RQ (40 CFR 355): Not applicable
D.O.T. Emergency Response Guide Number: Not applicable

7. HANDLING / STORAGE

Handling: Avoid contact with eyes Do not breathe dust. Wash thoroughly after handling. Use with adequate ventilation. Maintain general industrial hygiene practices when using this product.
Storage: Protect from: heat moisture
Flammability Class: Not applicable

8. EXPOSURE CONTROLS / PROTECTIVE EQUIPMENT

Engineering Controls: Maintain general industrial hygiene practices when using this product.
Personal Protective Equipment:
Eye Protection: safety glasses with top and side shields
Skin Protection: lab coat
Inhalation Protection: adequate ventilation
Precautionary Measures: Avoid contact with: eyes Do not breathe: dust Wash thoroughly after handling. Use with adequate ventilation. Protect from: heat moisture
TLV: 5 mg/m^3 (ZnO)
PEL: 5 mg/m^3 (ZnO)

9. PHYSICAL / CHEMICAL PROPERTIES

Appearance: Bluish-gray powder
Physical State: Solid
Molecular Weight: 65.37
Odor: None
pH: Not applicable
Vapor Pressure: Not applicable
Vapor Density (air = 1): Not applicable
Boiling Point: 907° C (1665° F)

Melting Point: 419° C (786° F)
Specific Gravity (water = 1): 7.14
Evaporation Rate (water = 1): Not applicable
Volatile Organic Compounds Content: Not applicable
Partition Coefficient (n-octanol / water): Not applicable
Solubility:
Water: Insoluble
Acid: Soluble
Other: Soluble in alkali solutions
Metal Corrosivity:
Steel: Not determined
Aluminum: Not determined

10. STABILITY / REACTIVITY

Chemical Stability: Stable when stored under proper conditions.
Conditions to Avoid: Heating to decomposition. Avoid creating dust.
Reactivity / Incompatibility: Incompatible with: Barium dioxide barium nitrate cadmium carbon disulfide chlorates chlorine fluorine hydroxylamine sulfur magnesium manganese chloride potassium chloride selenium
Hazardous Decomposition: Heating to decomposition releases: zinc oxide
Hazardous Polymerization: Will not occur.

11. TOXICOLOGICAL INFORMATION

Product Toxicological Data:
LD50: None reported
LC50: None reported
Dermal Toxicity Data: None reported
Skin and Eye Irritation Data: Skin human 300 µg/3D (Intermittent) - MILD
Mutation Data: None reported
Reproductive Effects Data: None reported
Ingredient Toxicological Data: --
Not applicable

12. ECOLOGICAL INFORMATION

Product Ecological Information: --
No ecological data available for this product.
Ingredient Ecological Information: --
Not applicable

13. DISPOSAL CONSIDERATIONS

EPA Waste ID Number: None
Special Instructions (Disposal): Dispose of material in an E.P.A. approved hazardous waste facility.
Empty Containers: Rinse three times with an appropriate solvent. Dispose of empty container as normal trash.
NOTICE (Disposal): These disposal guidelines are based on federal regulations and may be superseded by more stringent state or local requirements. Please consult your local environmental regulators for more information.

14. TRANSPORT INFORMATION

D.O.T.:
D.O.T. Proper Shipping Name: Zinc Powder
--
DOT Hazard Class: 4.3
DOT Subsidiary Risk: 4.2
DOT ID Number: UN1436
DOT Packing Group: III
I.C.A.O.:
I.C.A.O. Proper Shipping Name: Zinc Powder
--
ICAO Hazard Class: 4.3
ICAO Subsidiary Risk: 4.2
ICAO ID Number: UN1436
ICAO Packing Group: III
I.M.O.:
I.M.O. Proper Shipping Name: Zinc Powder
--
I.M.O. Hazard Class: 4.3
I.M.O. Subsidiary Risk: 4.2
I.M.O. ID Number: UN1436
I.M.O. Packing Group: III
Additional Information: There is a possibility that this product could be contained in a reagent set or kit composed of various compatible dangerous goods. If the item is NOT in a set or kit, the classification given above applies. If the item IS part of a set or kit, the classification would change to the following: UN3316 Chemical Kit, Class 9, PG II or III. If the item is not regulated, the Chemical Kit classification does not apply.

15. REGULATORY INFORMATION

U.S. Federal Regulations:
O.S.H.A.: This product meets the criteria for a hazardous substance as defined in the Hazard Communication Standard. (29 CFR 1910.1200)
E.P.A.:
S.A.R.A. Title III Section 311/312 Categorization (40 CFR 370): Immediate (Acute) Health Hazard Fire Hazard
S.A.R.A. Title III Section 313 (40 CFR 372): This product contains a chemical(s) subject to the reporting requirements of Section 313 of Title III of SARA.
Zinc
302 (EHS) TPQ (40 CFR 355): Not applicable
304 CERCLA RQ (40 CFR 302.4): Zinc 1000 lbs.
304 EHS RQ (40 CFR 355): Not applicable
Clean Water Act (40 CFR 116.4): Not applicable
RCRA: Contains no RCRA regulated substances.
C.P.S.C.: Not applicable
State Regulations:
California Prop. 65: No Prop. 65 listed chemicals are present in this product.
Identification of Prop. 65 Ingredient(s): None
California Perchlorate Rule CCR Title 22 Chap 33:
Trade Secret Registry: Not applicable
National Inventories:
U.S. Inventory Status: TSCA Listed: Yes
TSCA CAS Number: 4770-66-6

16. OTHER INFORMATION

Intended Use: Laboratory Reagent

References: Air Contaminants, Federal Register, Vol. 54, No. 12. Thursday, January 19, 1989. pp. 2332-2983. CCINFO RTECS. Canadian Centre for Occupational Health and Safety. Hamilton, Ontario Canada: 30 June 1993. In-house information. Patty, Frank A. Industrial Hygiene and Toxicology, 3rd Revised Edition. Volume 2. New York: A Wiley-Interscience Publication, 1981. Prager, Jan C. Environmental Contaminants Reference Databook, Volumes I and II. Van Nostrand Reinhold Company, New York. Sax, N. Irving and Richard J. Lewis, Sr., revised by. Hawley's Condensed Chemical Dictionary, Eleventh Ed. New York: Van Nostrand Reinhold Co., 1987. Sax, N. Irving. Dangerous Properties of Industrial Materials, 7th Ed. New York: Van Nostrand Reinhold Co., 1989. Technical Judgment. TLV's Threshold Limit Values and Biological Exposure Indices for 1992-1993. American Conference of Governmental Industrial Hygienists, 1992. Vendor Information.

Revision Summary: Updates in Section(s) 14,

Legend:

NA - Not Applicable	w/w - weight/weight
ND - Not Determined	w/v - weight/volume
NV - Not Available	v/v - volume/volume

USER RESPONSIBILITY: Each user should read and understand this information and incorporate it in individual site safety programs in accordance with applicable hazard communication standards and regulations.

THE INFORMATION CONTAINED HEREIN IS BASED ON DATA CONSIDERED TO BE ACCURATE. HOWEVER, NO WARRANTY IS EXPRESSED OR IMPLIED REGARDING THE ACCURACY OF THESE DATA OR THE RESULTS TO BE OBTAINED FROM THE USE THEREOF.

World Headquarters
Hach Company
P.O.Box 389
Loveland, CO USA 80539
(970) 669-3050

MSDS No: M00024

MATERIAL SAFETY DATA SHEET

1. CHEMICAL PRODUCT AND COMPANY IDENTIFICATION

Product Name: Ferrous Iron Reagent
Catalog Number: 103769

Hach Company
P.O.Box 389
Loveland, CO USA 80539
(970) 669-3050

Emergency Telephone Numbers:
(Medical and Transportation)
(303) 623-5716 24 Hour Service
(515)232-2533 8am - 4pm CST

MSDS Number: M00024
Chemical Name: Not applicable
CAS No.: Not applicable
Chemical Formula: Not applicable
Chemical Family: Not applicable
Hazard: May cause irritation.
Date of MSDS Preparation:
Day: 05
Month: October
Year: 2007

2. COMPOSITION / INFORMATION ON INGREDIENTS

1, 10-Phenanthroline
CAS No.: 5144-89-8
TSCA CAS Number: 66-71-7
Percent Range: 1.0 - 10.0
Percent Range Units: weight / weight
LD50: Oral Rat LD_{50} = 132 mg/kg
LC50: None reported
TLV: Not established
PEL: Not established
Hazard: May cause irritation.

Sodium Bicarbonate
CAS No.: 144-55-8
TSCA CAS Number: 144-55-8
Percent Range: 90.0 - 100.0
Percent Range Units: weight / weight
LD50: Oral rat LD50 = 4220 mg/kg
LC50: None reported
TLV: Not established
PEL: Not established
Hazard: May cause irritation.

3. HAZARDS IDENTIFICATION

Emergency Overview:
Appearance: White powder
Odor: Not determined
MAY CAUSE EYE, SKIN AND RESPIRATORY TRACT IRRITATION

HMIS:
Health: 1
Flammability: 0
Reactivity: 0
Protective Equipment: X - See protective equipment, Section 8.
NFPA:
Health: 1
Flammability: 0
Reactivity: 0
Symbol: Not applicable
Potential Health Effects:
Eye Contact: May cause irritiation
Skin Contact: May cause irritiation
Skin Absorption: None reported
Target Organs: None reported
Ingestion: Very large doses may cause: abdominal pain gastrointestinal disturbances alkalosis which causes abnormally high alkali reserve of the blood and other body fluids hypotension
Target Organs: None reported
Inhalation: May cause: respiratory tract irritation
Target Organs: None reported
Medical Conditions Aggravated: Pre-existing: Kidney conditions
Chronic Effects: None reported
Cancer / Reproductive Toxicity Information:
This product does NOT contain any OSHA listed carcinogens.

This product does NOT contain any IARC listed chemicals.

This product does NOT contain any NTP listed chemicals.

Additional Cancer / Reproductive Toxicity Information: None reported
Toxicologically Synergistic Products: None reported

4. FIRST AID

Eye Contact: Immediately flush eyes with water for 15 minutes. Call physician.
Skin Contact (First Aid): Wash skin with soap and plenty of water. Call physician if irritation develops.
Ingestion (First Aid): Give large quantities of water. Call physician immediately.
Inhalation: Remove to fresh air.

5. FIRE FIGHTING MEASURES

Flammable Properties: Does not burn, but may melt in a fire, releasing toxic fumes.
Flash Point: Not applicable
Method: Not applicable
Flammability Limits:
Lower Explosion Limits: Not applicable
Upper Explosion Limits: Not applicable
Autoignition Temperature: Not applicable

Hazardous Combustion Products: Toxic fumes of: sodium monoxide nitrogen oxides. carbon monoxide, carbon dioxide.
Fire / Explosion Hazards: None reported
Static Discharge: None reported.
Mechanical Impact: None reported
Extinguishing Media: Water. Carbon dioxide Dry chemical.
Fire Fighting Instruction: As in any fire, wear self-contained breathing apparatus pressure-demand and full protective gear.

6. ACCIDENTAL RELEASE MEASURES

Spill Response Notice:
Only persons properly qualified to respond to an emergency involving hazardous substances may respond to a spill according to federal regulations (OSHA 29 CFR 1910.120(a)(v)) and per your company's emergency response plan and guidelines/procedures. See Section 13, Special Instructions for disposal assistance.
Containment Technique: Stop spilled material from being released to the environment.
Clean-up Technique: Scoop up spilled material into a large beaker and dissolve with water. Flush the spilled material to the drain with a large excess of water. Decontaminate the area of the spill with a weak acid solution.
Evacuation Procedure: Evacuate as needed to perform spill clean-up. If conditions warrant, increase the size of the evacuation.
Special Instructions (for accidental release): Not applicable
304 EHS RQ (40 CFR 355): Not applicable
D.O.T. Emergency Response Guide Number: None

7. HANDLING / STORAGE

Handling: Avoid contact with eyes skin Do not breathe dust. Wash thoroughly after handling. Maintain general industrial hygiene practices when using this product.
Storage: Keep container tightly closed when not in use. Protect from: moisture oxidizers
Flammability Class: Not applicable

8. EXPOSURE CONTROLS / PROTECTIVE EQUIPMENT

Engineering Controls: Have an eyewash station nearby. Maintain general industrial hygiene practices when using this product.
Personal Protective Equipment:
Eye Protection: safety glasses with top and side shields
Skin Protection: disposable latex gloves
Inhalation Protection: adequate ventilation
Precautionary Measures: Avoid contact with: eyes skin Do not breathe: dust Wash thoroughly after handling. Keep away from: oxidizers
TLV: Not established
PEL: Not established

9. PHYSICAL / CHEMICAL PROPERTIES

Appearance: White powder
Physical State: Solid
Molecular Weight: Not applicable
Odor: Not determined
pH: Not determined
Vapor Pressure: Not applicable
Vapor Density (air = 1): Not applicable

Boiling Point: Not applicable
Melting Point: Not determined
Specific Gravity (water = 1): 2.10
Evaporation Rate (water = 1): Not applicable
Volatile Organic Compounds Content: Not applicable
Partition Coefficient (n-octanol / water): Not applicable
Solubility:
Water: Slightly soluble
Acid: Slightly soluble
Other: Not determined
Metal Corrosivity:
Steel: Not determined
Aluminum: Not determined

10. STABILITY / REACTIVITY

Chemical Stability: Stable when stored under proper conditions.
Conditions to Avoid: Excess moisture Heating to decomposition.
Reactivity / Incompatibility: Incompatible with: oxidizers
Hazardous Decomposition: Toxic fumes of: nitrogen oxides sodium oxides carbon monoxide carbon dioxide
Hazardous Polymerization: Will not occur.

11. TOXICOLOGICAL INFORMATION

Product Toxicological Data:
LD50: None reported
LC50: None reported
Dermal Toxicity Data: None reported
Skin and Eye Irritation Data: Sodium Bicarbonate: Eye - rabbit - 100 mg/30 seconds - MILD; Skin - Human - 30 mg/3 days intermittent - MILD
Mutation Data: None reported
Reproductive Effects Data: None reported
Ingredient Toxicological Data: Sodium Bicarbonate: Oral rat LD_{50} = 4220 mg/kg; 1, 10-Phenanthroline: Oral rat LD_{50} = 132 mg/kg

12. ECOLOGICAL INFORMATION

Product Ecological Information: --
No ecological data available for this product.
Ingredient Ecological Information: --
No ecological data available for the ingredients of this product.

13. DISPOSAL CONSIDERATIONS

EPA Waste ID Number: None
Special Instructions (Disposal): Dilute material with excess water making a weaker than 5% solution. Open cold water tap completely, slowly pour the material to the drain.
Empty Containers: Rinse three times with an appropriate solvent. Dispose of empty container as normal trash.
NOTICE (Disposal): These disposal guidelines are based on federal regulations and may be superseded by more stringent state or local requirements. Please consult your local environmental regulators for more information.

14. TRANSPORT INFORMATION

D.O.T.:
D.O.T. Proper Shipping Name: Not Currently Regulated
--
DOT Hazard Class: NA
DOT Subsidiary Risk: NA
DOT ID Number: NA
DOT Packing Group: NA
I.C.A.O.:
I.C.A.O. Proper Shipping Name: Not Currently Regulated
--
ICAO Hazard Class: NA
ICAO Subsidiary Risk: NA
ICAO ID Number: NA
ICAO Packing Group: NA
I.M.O.:
I.M.O. Proper Shipping Name: Not Currently Regulated
--
I.M.O. Hazard Class: NA
I.M.O. Subsidiary Risk: NA
I.M.O. ID Number: NA
I.M.O. Packing Group: NA
Additional Information: There is a possibility that this product could be contained in a reagent set or kit composed of various compatible dangerous goods. If the item is NOT in a set or kit, the classification given above applies. If the item IS part of a set or kit, the classification would change to the following: UN3316 Chemical Kit, Class 9, PG II or III. If the item is not regulated, the Chemical Kit classification does not apply. ALSO NOTE: If the National Competent Authority declares this product an environmental hazard by Special Provision 909 (IMDG) and Special Provision A97 (IATA) the classification may be UN3077 or UN3082.

15. REGULATORY INFORMATION

U.S. Federal Regulations:
O.S.H.A.: This product meets the criteria for a hazardous substance as defined in the Hazard Communication Standard. (29 CFR 1910.1200)
E.P.A.:
S.A.R.A. Title III Section 311/312 Categorization (40 CFR 370): Immediate (Acute) Health Hazard
S.A.R.A. Title III Section 313 (40 CFR 372): This product does NOT contain any chemical subject to the reporting requirements of Section 313 of Title III of SARA.
--
302 (EHS) TPQ (40 CFR 355): Not applicable
304 CERCLA RQ (40 CFR 302.4): Not applicable
304 EHS RQ (40 CFR 355): Not applicable
Clean Water Act (40 CFR 116.4): Not applicable
RCRA: Contains no RCRA regulated substances.
C.P.S.C.: Not applicable
State Regulations:
California Prop. 65: No Prop. 65 listed chemicals are present in this product.
Identification of Prop. 65 Ingredient(s): None
California Perchlorate Rule CCR Title 22 Chap 33:
Trade Secret Registry: Not applicable
National Inventories:
U.S. Inventory Status: All ingredients in this product are listed on the TSCA 8(b) Inventory (40 CFR 710).
TSCA CAS Number: Not applicable

16. OTHER INFORMATION

Intended Use: Iron determination

References: TLV's Threshold Limit Values and Biological Exposure Indices for 1992-1993. American Conference of Governmental Industrial Hygienists, 1992. Air Contaminants, Federal Register, Vol. 54, No. 12. Thursday, January 19, 1989. pp. 2332-2983. 29 CFR 1900 - 1910 (Code of Federal Regulations - Labor). In-house information. Technical Judgment. Fire Protection Guide on Hazardous Materials, 10th Ed. Quincy, MA: National Fire Protection Fire Protection Guide on Hazardous Materials, 10th Ed. Quincy, MA: National Fire Protection Association, 1991.

Revision Summary: Updates in Section(s) 14,

Legend:

NA - Not Applicable	w/w - weight/weight
ND - Not Determined	w/v - weight/volume
NV - Not Available	v/v - volume/volume

USER RESPONSIBILITY: Each user should read and understand this information and incorporate it in individual site safety programs in accordance with applicable hazard communication standards and regulations.

THE INFORMATION CONTAINED HEREIN IS BASED ON DATA CONSIDERED TO BE ACCURATE. HOWEVER, NO WARRANTY IS EXPRESSED OR IMPLIED REGARDING THE ACCURACY OF THESE DATA OR THE RESULTS TO BE OBTAINED FROM THE USE THEREOF.

World Headquarters
Hach Company
P.O.Box 389
Loveland, CO USA 80539
(970) 669-3050

MSDS No: M00024

MATERIAL SAFETY DATA SHEET

1. CHEMICAL PRODUCT AND COMPANY IDENTIFICATION

Product Name: Ferrous Iron Reagent
Catalog Number: 2514025

Hach Company
P.O.Box 389
Loveland, CO USA 80539
(970) 669-3050

Emergency Telephone Numbers:
(Medical and Transportation)
(303) 623-5716 24 Hour Service
(515)232-2533 8am - 4pm CST

MSDS Number: M00024
Chemical Name: Not applicable
CAS No.: Not applicable
Chemical Formula: Not applicable
Chemical Family: Not applicable
Hazard: May cause irritation.
Date of MSDS Preparation:
Day: 05
Month: October
Year: 2007

2. COMPOSITION / INFORMATION ON INGREDIENTS

1, 10-Phenanthroline
CAS No.: 5144-89-8
TSCA CAS Number: 66-71-7
Percent Range: 1.0 - 10.0
Percent Range Units: weight / weight
LD50: Oral Rat LD_{50} = 132 mg/kg
LC50: None reported
TLV: Not established
PEL: Not established
Hazard: May cause irritation.

Sodium Bicarbonate
CAS No.: 144-55-8
TSCA CAS Number: 144-55-8
Percent Range: 90.0 - 100.0
Percent Range Units: weight / weight
LD50: Oral rat LD50 = 4220 mg/kg
LC50: None reported
TLV: Not established
PEL: Not established
Hazard: May cause irritation.

3. HAZARDS IDENTIFICATION

Emergency Overview:
Appearance: White powder
Odor: Not determined
MAY CAUSE EYE, SKIN AND RESPIRATORY TRACT IRRITATION

HMIS:
Health: 1
Flammability: 0
Reactivity: 0
Protective Equipment: X - See protective equipment, Section 8.
NFPA:
Health: 1
Flammability: 0
Reactivity: 0
Symbol: Not applicable
Potential Health Effects:
Eye Contact: May cause irritiation
Skin Contact: May cause irritiation
Skin Absorption: None reported
Target Organs: None reported
Ingestion: Very large doses may cause: abdominal pain gastrointestinal disturbances alkalosis which causes abnormally high alkali reserve of the blood and other body fluids hypotension
Target Organs: None reported
Inhalation: May cause: respiratory tract irritation
Target Organs: None reported
Medical Conditions Aggravated: Pre-existing: Kidney conditions
Chronic Effects: None reported
Cancer / Reproductive Toxicity Information:
This product does NOT contain any OSHA listed carcinogens.

This product does NOT contain any IARC listed chemicals.

This product does NOT contain any NTP listed chemicals.

Additional Cancer / Reproductive Toxicity Information: None reported
Toxicologically Synergistic Products: None reported

4. FIRST AID

Eye Contact: Immediately flush eyes with water for 15 minutes. Call physician.
Skin Contact (First Aid): Wash skin with soap and plenty of water. Call physician if irritation develops.
Ingestion (First Aid): Give large quantities of water. Call physician immediately.
Inhalation: Remove to fresh air.

5. FIRE FIGHTING MEASURES

Flammable Properties: Does not burn, but may melt in a fire, releasing toxic fumes.
Flash Point: Not applicable
Method: Not applicable
Flammability Limits:
Lower Explosion Limits: Not applicable
Upper Explosion Limits: Not applicable

Autoignition Temperature: Not applicable
Hazardous Combustion Products: Toxic fumes of: sodium monoxide nitrogen oxides. carbon monoxide, carbon dioxide.
Fire / Explosion Hazards: None reported
Static Discharge: None reported.
Mechanical Impact: None reported
Extinguishing Media: Water. Carbon dioxide Dry chemical.
Fire Fighting Instruction: As in any fire, wear self-contained breathing apparatus pressure-demand and full protective gear.

6. ACCIDENTAL RELEASE MEASURES

Spill Response Notice:
Only persons properly qualified to respond to an emergency involving hazardous substances may respond to a spill according to federal regulations (OSHA 29 CFR 1910.120(a)(v)) and per your company's emergency response plan and guidelines/procedures. See Section 13, Special Instructions for disposal assistance.
Containment Technique: Stop spilled material from being released to the environment.
Clean-up Technique: Scoop up spilled material into a large beaker and dissolve with water. Flush the spilled material to the drain with a large excess of water. Decontaminate the area of the spill with a weak acid solution.
Evacuation Procedure: Evacuate as needed to perform spill clean-up. If conditions warrant, increase the size of the evacuation.
Special Instructions (for accidental release): Not applicable
304 EHS RQ (40 CFR 355): Not applicable
D.O.T. Emergency Response Guide Number: None

7. HANDLING / STORAGE

Handling: Avoid contact with eyes skin Do not breathe dust. Wash thoroughly after handling. Maintain general industrial hygiene practices when using this product.
Storage: Keep container tightly closed when not in use. Protect from: moisture oxidizers
Flammability Class: Not applicable

8. EXPOSURE CONTROLS / PROTECTIVE EQUIPMENT

Engineering Controls: Have an eyewash station nearby. Maintain general industrial hygiene practices when using this product.
Personal Protective Equipment:
Eye Protection: safety glasses with top and side shields
Skin Protection: disposable latex gloves
Inhalation Protection: adequate ventilation
Precautionary Measures: Avoid contact with: eyes skin Do not breathe: dust Wash thoroughly after handling. Keep away from: oxidizers
TLV: Not established
PEL: Not established

9. PHYSICAL / CHEMICAL PROPERTIES

Appearance: White powder
Physical State: Solid
Molecular Weight: Not applicable
Odor: Not determined
pH: Not determined
Vapor Pressure: Not applicable

Vapor Density (air = 1): Not applicable
Boiling Point: Not applicable
Melting Point: Not determined
Specific Gravity (water = 1): 2.10
Evaporation Rate (water = 1): Not applicable
Volatile Organic Compounds Content: Not applicable
Partition Coefficient (n-octanol / water): Not applicable
Solubility:
Water: Slightly soluble
Acid: Slightly soluble
Other: Not determined
Metal Corrosivity:
Steel: Not determined
Aluminum: Not determined

10. STABILITY / REACTIVITY

Chemical Stability: Stable when stored under proper conditions.
Conditions to Avoid: Excess moisture Heating to decomposition.
Reactivity / Incompatibility: Incompatible with: oxidizers
Hazardous Decomposition: Toxic fumes of: nitrogen oxides sodium oxides carbon monoxide carbon dioxide
Hazardous Polymerization: Will not occur.

11. TOXICOLOGICAL INFORMATION

Product Toxicological Data:
LD50: None reported
LC50: None reported
Dermal Toxicity Data: None reported
Skin and Eye Irritation Data: Sodium Bicarbonate: Eye - rabbit - 100 mg/30 seconds - MILD; Skin - Human - 30 mg/3 days intermittent - MILD
Mutation Data: None reported
Reproductive Effects Data: None reported
Ingredient Toxicological Data: Sodium Bicarbonate: Oral rat LD_{50} = 4220 mg/kg; 1, 10-Phenanthroline: Oral rat LD_{50} = 132 mg/kg

12. ECOLOGICAL INFORMATION

Product Ecological Information: --
No ecological data available for this product.
Ingredient Ecological Information: --
No ecological data available for the ingredients of this product.

13. DISPOSAL CONSIDERATIONS

EPA Waste ID Number: None
Special Instructions (Disposal): Dilute material with excess water making a weaker than 5% solution. Open cold water tap completely, slowly pour the material to the drain.
Empty Containers: Rinse three times with an appropriate solvent. Dispose of empty container as normal trash.

NOTICE (Disposal): These disposal guidelines are based on federal regulations and may be superseded by more stringent state or local requirements. Please consult your local environmental regulators for more information.

14. TRANSPORT INFORMATION

D.O.T.:
D.O.T. Proper Shipping Name: Not Currently Regulated
--
DOT Hazard Class: NA
DOT Subsidiary Risk: NA
DOT ID Number: NA
DOT Packing Group: NA
I.C.A.O.:
I.C.A.O. Proper Shipping Name: Not Currently Regulated
--
ICAO Hazard Class: NA
ICAO Subsidiary Risk: NA
ICAO ID Number: NA
ICAO Packing Group: NA
I.M.O.:
I.M.O. Proper Shipping Name: Not Currently Regulated
--
I.M.O. Hazard Class: NA
I.M.O. Subsidiary Risk: NA
I.M.O. ID Number: NA
I.M.O. Packing Group: NA
Additional Information: There is a possibility that this product could be contained in a reagent set or kit composed of various compatible dangerous goods. If the item is NOT in a set or kit, the classification given above applies. If the item IS part of a set or kit, the classification would change to the following: UN3316 Chemical Kit, Class 9, PG II or III. If the item is not regulated, the Chemical Kit classification does not apply. ALSO NOTE: If the National Competent Authority declares this product an environmental hazard by Special Provision 909 (IMDG) and Special Provision A97 (IATA) the classification may be UN3077 or UN3082.

15. REGULATORY INFORMATION

U.S. Federal Regulations:
O.S.H.A.: This product meets the criteria for a hazardous substance as defined in the Hazard Communication Standard. (29 CFR 1910.1200)
E.P.A.:
S.A.R.A. Title III Section 311/312 Categorization (40 CFR 370): Immediate (Acute) Health Hazard
S.A.R.A. Title III Section 313 (40 CFR 372): This product does NOT contain any chemical subject to the reporting requirements of Section 313 of Title III of SARA.
--
302 (EHS) TPQ (40 CFR 355): Not applicable
304 CERCLA RQ (40 CFR 302.4): Not applicable
304 EHS RQ (40 CFR 355): Not applicable
Clean Water Act (40 CFR 116.4): Not applicable
RCRA: Contains no RCRA regulated substances.
C.P.S.C.: Not applicable
State Regulations:
California Prop. 65: No Prop. 65 listed chemicals are present in this product.
Identification of Prop. 65 Ingredient(s): None
California Perchlorate Rule CCR Title 22 Chap 33:
Trade Secret Registry: Not applicable

National Inventories:

U.S. Inventory Status: All ingredients in this product are listed on the TSCA 8(b) Inventory (40 CFR 710).

TSCA CAS Number: Not applicable

16. OTHER INFORMATION

Intended Use: Iron determination

References: TLV's Threshold Limit Values and Biological Exposure Indices for 1992-1993. American Conference of Governmental Industrial Hygienists, 1992. Air Contaminants, Federal Register, Vol. 54, No. 12. Thursday, January 19, 1989. pp. 2332-2983. 29 CFR 1900 - 1910 (Code of Federal Regulations - Labor). In-house information. Technical Judgment. Fire Protection Guide on Hazardous Materials, 10th Ed. Quincy, MA: National Fire Protection Fire Protection Guide on Hazardous Materials, 10th Ed. Quincy, MA: National Fire Protection Association, 1991.

Revision Summary: Updates in Section(s) 14,

Legend:

NA - Not Applicable	w/w - weight/weight
ND - Not Determined	w/v - weight/volume
NV - Not Available	v/v - volume/volume

USER RESPONSIBILITY: Each user should read and understand this information and incorporate it in individual site safety programs in accordance with applicable hazard communication standards and regulations.

THE INFORMATION CONTAINED HEREIN IS BASED ON DATA CONSIDERED TO BE ACCURATE. HOWEVER, NO WARRANTY IS EXPRESSED OR IMPLIED REGARDING THE ACCURACY OF THESE DATA OR THE RESULTS TO BE OBTAINED FROM THE USE THEREOF.

World Headquarters
Hach Company
P.O.Box 389
Loveland, CO USA 80539
(970) 669-3050

MSDS No: M00023

MATERIAL SAFETY DATA SHEET

1. CHEMICAL PRODUCT AND COMPANY IDENTIFICATION

Product Name: Buffer Powder Citrate Type
Catalog Number: 2107669

Hach Company
P.O.Box 389
Loveland, CO USA 80539
(970) 669-3050

Emergency Telephone Numbers:
(Medical and Transportation)
(303) 623-5716 24 Hour Service
(515)232-2533 8am - 4pm CST

MSDS Number: M00023
Chemical Name: Not applicable
CAS No.: Not applicable
Chemical Formula: Not applicable
Chemical Family: Not applicable
Hazard: Causes moderate eye irritation.
Date of MSDS Preparation:
Day: 21
Month: May
Year: 2009

2. COMPOSITION / INFORMATION ON INGREDIENTS

Citric Acid
CAS No.: 77-92-9
TSCA CAS Number: 77-92-9
Percent Range: 15.0 - 25.0
Percent Range Units: weight / weight
LD50: Oral rat LD50 = 6730 mg/Kg
LC50: None reported
TLV: Not established
PEL: Not established
Hazard: Causes severe eye irritation.

Sodium Phosphate Monobasic
CAS No.: 7782-85-6
TSCA CAS Number: 7558-79-4
Percent Range: 45.0 - 55.0
Percent Range Units: weight / weight
LD50: Oral rat LD_{50} = 12930 mg/kg.
LC50: None reported
TLV: Not established
PEL: Not established
Hazard: May cause irritation.

Sodium Sulfate
CAS No.: 7757-82-6
TSCA CAS Number: 7757-82-6

Percent Range: 30.0 - 40.0
Percent Range Units: weight / weight
LD50: Oral mouse LD50 = 5989 mg/kg
LC50: None reported
TLV: Not established
PEL: Not established
Hazard: May cause irritation.

3. HAZARDS IDENTIFICATION

Emergency Overview:
Appearance: White powder
Odor: None
CAUSES EYE IRRITATION MAY CAUSE SKIN AND RESPIRATORY TRACT IRRITATION

HMIS:
Health: 1
Flammability: 0
Reactivity: 0
Protective Equipment: X - See protective equipment, Section 8.
NFPA:
Health: 1
Flammability: 0
Reactivity: 0
Symbol: Not applicable
Potential Health Effects:
Eye Contact: Causes irritation
Skin Contact: May cause irritiation
Skin Absorption: No effects anticipated
Target Organs: Not applicable
Ingestion: Very large doses may cause: nausea vomiting diarrhea lethargy muscular cramps fever
Target Organs: None reported
Inhalation: May cause: respiratory tract irritation
Target Organs: None reported
Medical Conditions Aggravated: Pre-existing: Eye conditions
Chronic Effects: Citric acid chronic overexposure may cause effects due to the ability of citric acid to chelate metals, which could impair the body's ability to absorb calcium and iron.
Cancer / Reproductive Toxicity Information:
This product does NOT contain any OSHA listed carcinogens.

This product does NOT contain any IARC listed chemicals.

This product does NOT contain any NTP listed chemicals.

Additional Cancer / Reproductive Toxicity Information: None reported
Toxicologically Synergistic Products: None reported

4. FIRST AID

Eye Contact: Immediately flush eyes with water for 15 minutes. Call physician.
Skin Contact (First Aid): Wash skin with plenty of water. Call physician if irritation develops.
Ingestion (First Aid): Give large quantities of water. Call physician immediately.

Inhalation: Remove to fresh air.

5. FIRE FIGHTING MEASURES

Flammable Properties: Can burn in fire, releasing toxic vapors.
Flash Point: Not applicable
Method: Not applicable
Flammability Limits:
Lower Explosion Limits: Not applicable
Upper Explosion Limits: Not applicable
Autoignition Temperature: Not determined
Hazardous Combustion Products: Toxic fumes of: phosphorus oxides sodium monoxide sulfur oxides. carbon monoxide, carbon dioxide.
Fire / Explosion Hazards: May react violently with: aluminum / aluminum compounds metal nitrates
Static Discharge: None reported.
Mechanical Impact: None reported
Extinguishing Media: Water.
Fire Fighting Instruction: As in any fire, wear self-contained breathing apparatus pressure-demand and full protective gear.

6. ACCIDENTAL RELEASE MEASURES

Spill Response Notice:
Only persons properly qualified to respond to an emergency involving hazardous substances may respond to a spill according to federal regulations (OSHA 29 CFR 1910.120(a)(v)) and per your company's emergency response plan and guidelines/procedures. See Section 13, Special Instructions for disposal assistance.
Containment Technique: Stop spilled material from being released to the environment.
Clean-up Technique: Scoop up spilled material into a large beaker and dissolve with water. Flush the spilled material to the drain with a large excess of water. Decontaminate the area of the spill with a soap solution.
Evacuation Procedure: Evacuate as needed to perform spill clean-up. If conditions warrant, increase the size of the evacuation.
Special Instructions (for accidental release): Mixture contains a component which is regulated as a water pollutant.
304 EHS RQ (40 CFR 355): Not applicable
D.O.T. Emergency Response Guide Number: Not applicable

7. HANDLING / STORAGE

Handling: Avoid contact with eyes Do not breathe dust. Wash thoroughly after handling. Maintain general industrial hygiene practices when using this product.
Storage: Store at 10 - 30°C. Keep container tightly closed when not in use. Protect from: moisture
Flammability Class: Not applicable

8. EXPOSURE CONTROLS / PROTECTIVE EQUIPMENT

Engineering Controls: Have an eyewash station nearby. Maintain general industrial hygiene practices when using this product.
Personal Protective Equipment:
Eye Protection: safety glasses with top and side shields
Skin Protection: disposable latex gloves lab coat
Inhalation Protection: adequate ventilation
Precautionary Measures: Avoid contact with: eyes Do not breathe: dust Wash thoroughly after handling. Protect from: moisture
TLV: Not established

PEL: Not established

9. PHYSICAL / CHEMICAL PROPERTIES

Appearance: White powder
Physical State: Solid
Molecular Weight: Not applicable
Odor: None
pH: of 1% solution at 23 °C = 6.35
Vapor Pressure: Not applicable
Vapor Density (air = 1): Not applicable
Boiling Point: Not applicable
Melting Point: 160 °C 320 °F
Specific Gravity (water = 1): 2.30
Evaporation Rate (water = 1): Not applicable
Volatile Organic Compounds Content: Not determined
Partition Coefficient (n-octanol / water): Not determined
Solubility:
Water: Soluble
Acid: Not determined
Other: Not determined
Metal Corrosivity:
Steel: Not determined
Aluminum: Not determined

10. STABILITY / REACTIVITY

Chemical Stability: Stable when stored under proper conditions.
Conditions to Avoid: Excess moisture Heating to decomposition.
Reactivity / Incompatibility: Incompatible with: metal nitrates aluminum
Hazardous Decomposition: Toxic fumes of: phosphorus oxides sulfur oxides carbon monoxide carbon dioxide
Hazardous Polymerization: Will not occur.

11. TOXICOLOGICAL INFORMATION

Product Toxicological Data:
LD50: None reported
LC50: None reported
Dermal Toxicity Data: None reported
Skin and Eye Irritation Data: Citric Acid Skin rabbit 500 mg/24 hour: MODERATE. Citric Acid Eye rabbit 750 µg/24 hour: SEVERE.
Mutation Data: None reported
Reproductive Effects Data: None reported
Ingredient Toxicological Data: Citric acid Oral rat LD50 = 6730 mg/kg; Sodium Sulfate Oral mouse LD50 = 5989 mg/kg; Sodium Phosphate Oral rat LD50 = 17 g/kg

12. ECOLOGICAL INFORMATION

Product Ecological Information: --
No ecological data available for this product.
Ingredient Ecological Information: Sodium Sulfate: Aquatic Toxicity: TLm 13500 mg/L bluegill sunfish / 96 hours, TLm 16500 mg/L mosquito fish / 96 hours

13. DISPOSAL CONSIDERATIONS

EPA Waste ID Number: Not applicable
Special Instructions (Disposal): Dilute to 3 to 5 times the volume with cold water. Open cold water tap completely, slowly pour the material to the drain. Flush system with plenty of water.
Empty Containers: Rinse three times with an appropriate solvent. Dispose of empty container as normal trash.
NOTICE (Disposal): These disposal guidelines are based on federal regulations and may be superseded by more stringent state or local requirements. Please consult your local environmental regulators for more information.

14. TRANSPORT INFORMATION

D.O.T.:
D.O.T. Proper Shipping Name: Not Currently Regulated
--
DOT Hazard Class: NA
DOT Subsidiary Risk: NA
DOT ID Number: NA
DOT Packing Group: NA
I.C.A.O.:
I.C.A.O. Proper Shipping Name: Not Currently Regulated
--
ICAO Hazard Class: NA
ICAO Subsidiary Risk: NA
ICAO ID Number: NA
ICAO Packing Group: NA
I.M.O.:
I.M.O. Proper Shipping Name: Not Currently Regulated
--
I.M.O. Hazard Class: NA
I.M.O. Subsidiary Risk: NA
I.M.O. ID Number: NA
I.M.O. Packing Group: NA
Additional Information: There is a possibility that this product could be contained in a reagent set or kit composed of various compatible dangerous goods. If the item is NOT in a set or kit, the classification given above applies. If the item IS part of a set or kit, the classification would change to the following: UN3316 Chemical Kit, Class 9, PG II or III. If the item is not regulated, the Chemical Kit classification does not apply.

15. REGULATORY INFORMATION

U.S. Federal Regulations:
O.S.H.A.: This product meets the criteria for a hazardous substance as defined in the Hazard Communication Standard. (29 CFR 1910.1200)
E.P.A.:
S.A.R.A. Title III Section 311/312 Categorization (40 CFR 370): Immediate (Acute) Health Hazard
S.A.R.A. Title III Section 313 (40 CFR 372): This product does NOT contain any chemical subject to the reporting requirements of Section 313 of Title III of SARA.
--
302 (EHS) TPQ (40 CFR 355): Not applicable
304 CERCLA RQ (40 CFR 302.4): Sodium phosphate, dibasic 5000 lbs.
304 EHS RQ (40 CFR 355): Not applicable
Clean Water Act (40 CFR 116.4): Sodium phosphate, dibasic - RQ 5000 lbs.

RCRA: Contains no RCRA regulated substances.
C.P.S.C.: Not applicable
State Regulations:
California Prop. 65: No Prop. 65 listed chemicals are present in this product.
Identification of Prop. 65 Ingredient(s): None
California Perchlorate Rule CCR Title 22 Chap 33:
Trade Secret Registry: Not applicable
National Inventories:
U.S. Inventory Status: All ingredients in this product are listed on the TSCA 8(b) Inventory (40 CFR 710).
TSCA CAS Number: Not applicable

16. OTHER INFORMATION

Intended Use: Determination of manganese
References: NIOSH Registry of Toxic Effects of Chemical Substances, 1985-86. Cincinnati: U.S. Department of Health and Human Services, April, 1987. CCINFO MSDS/FTSS. Canadian Centre for Occupational Health and Safety. Hamilton, Ontario Canada: 30 June 1993. The Merck Index, 11th Ed. Rahway, New Jersey: Merck and Co., Inc., 1989. Technical Judgment. In-house information. Air Contaminants, Federal Register, Vol. 54, No. 12. Thursday, January 19, 1989. pp. 2332-2983. TLV's Threshold Limit Values and Biological Exposure Indices for 1992-1993. American Conference of Governmental Industrial Hygienists, 1992.
Revision Summary: Updates in Section(s) 14,

Legend:

NA - Not Applicable	w/w - weight/weight
ND - Not Determined	w/v - weight/volume
NV - Not Available	v/v - volume/volume

USER RESPONSIBILITY: Each user should read and understand this information and incorporate it in individual site safety programs in accordance with applicable hazard communication standards and regulations.

THE INFORMATION CONTAINED HEREIN IS BASED ON DATA CONSIDERED TO BE ACCURATE. HOWEVER, NO WARRANTY IS EXPRESSED OR IMPLIED REGARDING THE ACCURACY OF THESE DATA OR THE RESULTS TO BE OBTAINED FROM THE USE THEREOF.

World Headquarters
Hach Company
P.O.Box 389
Loveland, CO USA 80539
(970) 669-3050

MSDS No: M00021

MATERIAL SAFETY DATA SHEET

1. CHEMICAL PRODUCT AND COMPANY IDENTIFICATION

Product Name: Sodium Periodate
Catalog Number: 2107769

Hach Company
P.O.Box 389
Loveland, CO USA 80539
(970) 669-3050

Emergency Telephone Numbers:
(Medical and Transportation)
(303) 623-5716 24 Hour Service
(515)232-2533 8am - 4pm CST

MSDS Number: M00021
Chemical Name: Sodium Periodate
CAS Number: 7790-28-5
Additional CAS No. (for hydrated forms): Not applicable
Chemical Formula: $NaIO_4$
Chemical Family: Oxidizing Agents
Intended Use: Laboratory Use

2. HAZARDS IDENTIFICATION

GHS Classification:
Hazard categories: Oxidizing Solids: Ox. Sol. 2 Acute Toxicity: Acute Tox. 4-Orl
GHS Label Elements:
DANGER

Hazard statements: May intensify fire; oxidiser. Harmful if swallowed.
Precautionary statements: Keep/Store away from clothing/combustible materials. Keep away from heat/sparks/open flames/hot surfaces. - No smoking. In case of fire: Use dry sand, extinquishing powder, foam or water for extinction. Wear protective gloves / protective clothing / eye protection / face protection. IF SWALLOWED: Call a POISON CENTER or doctor/physician if you feel unwell. Rinse mouth.

HMIS:
Health: 2
Flammability: 0
Reactivity: 2
Protective Equipment: X - See protective equipment, Section 8.

NFPA:
Health: 2
Flammability: 0
Reactivity: 2
Symbol: oxy

3. COMPOSITION / INFORMATION ON INGREDIENTS

Hazardous Components according to GHS: Yes
Sodium m-Periodate

CAS Number: 7790-28-5
Chemical Formula: $NaIO_4$
GHS Classification: Ox. Sol. 2, H272; Acute Tox. Orl. 4, H302
Percent Range: 100.0
Percent Range Units: weight / weight
PEL: Not established
TLV: Not established

4. FIRST AID

General Information: In the event of exposure, show this Material Safety Data Sheet and label (where possible) to a doctor.
Advice to doctor: Treat symptomatically.
Eye Contact: Immediately flush eyes with water for 15 minutes. Call physician.
Skin Contact (First Aid): Wash skin with plenty of water for 15 minutes. Remove contaminated clothing. Call physician immediately.
Inhalation: Remove to fresh air.
Ingestion (First Aid): Give large quantities of water. Call physician immediately.

5. FIRE FIGHTING MEASURES

Flammable Properties: Strong oxidizer. Contact with combustible materials may cause a fire.
Fire Fighting Instruction: As in any fire, wear self-contained breathing apparatus pressure-demand and full protective gear. Evacuate area and fight fire from a safe distance.
Extinguishing Media: Water. Carbon dioxide Dry chemical.
Extinguishing Media NOT To Be Used: Not applicable
Fire / Explosion Hazards: May react violently with: strong reducers
Hazardous Combustion Products: Toxic fumes of: iodine iodine compounds sodium monoxide

6. ACCIDENTAL RELEASE MEASURES

Spill Response Notice:
Only persons properly qualified to respond to an emergency involving hazardous substances may respond to a spill according to federal regulations (OSHA 29 CFR 1910.120(a)(v)) and per your company's emergency response plan and guidelines/procedures. See Section 13, Special Instructions for disposal assistance. Outside of the US, only persons properly qualified according to state or local regulations should respond to a spill involving chemicals.
Containment Technique: Stop spilled material from being released to the environment. Cover spilled solid material with sand or other inert material.
Clean-up Technique: Working in small batches, dilute with excess water. Adjust to a pH between 6 and 9 with an alkali, such as soda ash or sodium bicarbonate. Flush reacted material to the drain with a large excess of water. Decontaminate site with an alkali solution.
Evacuation Procedure: Evacuate general area (50 foot radius or as directed by your facility's emergency response plan) when: any quantity is spilled. If conditions warrant, increase the size of the evacuation.
DOT Emergency Response Guide Number: 140

7. HANDLING / STORAGE

Handling: Avoid contact with eyes skin clothing Do not breathe dust. Wash thoroughly after handling. Maintain general industrial hygiene practices when using this product.
Storage: Protect from: moisture oxidizable materials all sources of ignition
Flammability Class: Not applicable

8. EXPOSURE CONTROLS / PROTECTIVE EQUIPMENT

Engineering Controls: Maintain general industrial hygiene practices when using this product.
Personal Protective Equipment:
Eye Protection: safety glasses with top and side shields

Skin Protection: lab coat disposable latex gloves In the EU, the selected gloves must satisfy the specifications of EU Directive 89/686/EEC and standard EN 374 derived from it.
Inhalation Protection: adequate ventilation
Precautionary Measures: Avoid contact with: eyes skin clothing Do not breathe: dust Wash thoroughly after handling.
TLV: Not established
PEL: Not established
For Occupational Exposure Limits (OEL) for ingredients, see section 3 - Composition/Information on Ingredients.:

9. PHYSICAL / CHEMICAL PROPERTIES

Appearance: White powder
Physical State: Solid
Molecular Weight: 214.0
Odor: None
Odor Threshold: Odorless
pH: of 5% solution = 4 - 4.5
Metal Corrosivity:
Corrosivity Classification: Not classified as corrosive to metals according to GHS criteria.
Steel: Not determined
Aluminum: Not determined
Specific Gravity/ Relative Density (water = 1; air =1): 3.865
Viscosity: Not applicable
Solubility:
Water: Soluble - 14.4 g/100 g of water
Acid: Soluble
Other: Not determined
Partition Coefficient (n-octanol / water): Not determined
Coefficient of Water / Oil: Not determined
Melting Point: 300°C 572°F
Decomposition Temperature: > 300 °C
Boiling Point: Not applicable
Vapor Pressure: Not applicable
Vapor Density (air = 1): Not applicable
Evaporation Rate (water = 1): Not applicable
Volatile Organic Compounds Content: Not applicable
Flammable Properties: Strong oxidizer. Contact with combustible materials may cause a fire.
Flash Point: Not applicable
Method: Not applicable
Flammability Limits:
Lower Explosion Limits: Not applicable
Upper Explosion Limits: Not applicable
Autoignition Temperature: Not determined
Explosive Properties:
Not applicable Not classified according to GHS criteria.
Oxidizing Properties:
Not applicable Not classified according to GHS criteria.
Reactivity Properties:
Not applicable Not classifed as self-reactive, pyrophoric, self-heating or emitting flammable gases in contact with water according to GHS criteria.
Gas under Pressure: Not classified as gas under pressure according to GHS. Not applicable

10. STABILITY / REACTIVITY

Chemical Stability: Stable when stored under proper conditions.
Mechanical Impact: None reported
Static Discharge: None reported.
Reactivity / Incompatibility: May react violently in contact with: reducers organic materials
Hazardous Decomposition: Toxic fumes of: Iodine iodine compounds sodium monoxide
Conditions to Avoid: Excess moisture Heating to decomposition.

11. TOXICOLOGICAL INFORMATION

Toxicokinetics, Metabolism and Distribution: No information available
Toxicologically Synergistic Products: None reported
Acute Toxicity: Route Data Given Below
Analoguos compound, sodium perchlorate CAS 7601-89-0, (oral rat LD50 900 - 2100 mg/kg) was classified in Annex VI (EU Index No 017-010-00-6) as Acute Tox 4.
Specific Target Organ Toxicity - Single Exposure (STOT-SE): Based on classification principles, the classification criteria are not met.
Specific Target Organ Toxicity - Repeat Exposure (STOT-RE): Based on classification principles, the classification criteria are not met.
Skin Corrosion/Irritation: Based on classification principles, the classification criteria are not met.
Eye Damage: Based on classification principles, the classification criteria are not met.
Sensitization: Based on classification principles, the classification criteria are not met.
CMR Effects/Properties (carcinogenic, mutagenic or toxic to reproduction): No germ cell mutagenicity, carcinogeniicty or reproductive toxicity data found.
IARC Listed: No
NTP Listed: No
O.S.H.A. Listed: No
Symptoms/Effects:
Ingestion: May cause: abdominal pain vomiting diarrhea
Inhalation: Causes: irritation of nose and throat
Skin Absorption: None Reported
Chronic Effects: None reported
Medical Conditions Aggravated: Pre-existing: Eye conditions Skin conditions

12. ECOLOGICAL INFORMATION

Product Ecological Information: --
No ecological data available for this product.
CEPA Categorization: Persistent Not Bioaccumulative Not inherently toxic to aquatic organisms
Ingredient Ecological Information: --
Not applicable

13. DISPOSAL CONSIDERATIONS

EPA Waste ID Number: D001
Special Instructions (Disposal): Work in an approved fume hood. Working in a large container, cautiously add small portions of the material to cold water with agitation. Adjust to a pH between 6 and 9 with an alkali, such as soda ash or sodium bicarbonate. Open cold water tap completely, slowly pour the reacted material to the drain. Allow cold water to run for 5 minutes to completely flush the system. Verification should be made that such disposal is not inconsistent with any pretreatment agreement your facility may have with the wastewater treatment facility.
Empty Containers: Rinse three times with an appropriate solvent. Dispose of empty container as normal trash.
NOTICE (Disposal): These disposal guidelines are based on federal regulations and may be superseded by more stringent state or local requirements. Please consult your local environmental regulators for more information. In Europe: Chemical and analysis solutions must be disposed of in compliance with the respective national regulations. Product packaging must be disposed of in compliance with the country-specific regulations or must be passed to a packaging return system.

14. TRANSPORT INFORMATION

D.O.T.:
D.O.T. Proper Shipping Name: Oxidizing Solid, N.O.S.
(Sodium Periodate)
Hazard Class: 5.1
Subsidiary Risk: NA
ID Number: UN1479
Packing Group: II
T.D.G.:
Proper Shipping Name: Oxidizing Solid, N.O.S.
(Sodium Periodate)
Hazard Class: 5.1
Subsidiary Risk: NA

PIN: 1479
Group: II
I.C.A.O.:
I.C.A.O. Proper Shipping Name: Oxidizing Solid, N.O.S.
(Sodium Periodate)
Hazard Class: 5.1
Subsidiary Risk: NA
ID Number: UN1479
Packing Group: II
I.M.O.:
I.M.O. Proper Shipping Name: Oxidizing Solid, N.O.S.
(Sodium Periodate)
Hazard Class: 5.1
Subsidiary Risk: NA
ID Number: UN1479
Packing Group: II
Additional Information: There is a possibility that this product could be contained in a reagent set or kit composed of various compatible dangerous goods. If the item is NOT in a set or kit, the classification given above applies. If the item IS part of a set or kit, the classification would change to the following: UN3316 Chemical Kit, Class 9, PG II or III. If the item is not regulated, the Chemical Kit classification does not apply.

15. REGULATORY INFORMATION

U.S. Federal Regulations:
O.S.H.A.: This product meets the criteria for a hazardous substance as defined in the Hazard Communication Standard. (29 CFR 1910.1200)
E.P.A.:
S.A.R.A. Title III Section 311/312 Categorization (40 CFR 370): Immediate (Acute) Health Hazard Fire Hazard
S.A.R.A. Title III Section 313 (40 CFR 372): This product does NOT contain any chemical subject to the reporting requirements of Section 313 of Title III of SARA.
--
302 (EHS) TPQ (40 CFR 355): Not applicable
304 CERCLA RQ (40 CFR 302.4): Not applicable
304 EHS RQ (40 CFR 355): Not applicable
Clean Water Act (40 CFR 116.4): Not applicable
RCRA: Contains RCRA regulated substances. See Section 13, EPA Waste ID Number.
State Regulations:
California Prop. 65: No Prop. 65 listed chemicals are present in this product.
Identification of Prop. 65 Ingredient(s): Not applicable
California Perchlorate Rule CCR Title 22 Chap 33: Not applicable
Trade Secret Registry: Not applicable
National Inventories:
U.S. Inventory Status: TSCA Listed: Yes
CAS Number: 7790-28-5
Canadian Inventory Status: DSL Listed: Yes
EEC Inventory Status: EINECS Listed: Yes
Australian Inventory (AICS) Status: Listed
New Zealand Inventory (NZIoC) Status: Listed
Korean Inventory (KECI) Status: Listed
Japan (ENCS) Inventory Status: Listed
China (PRC) Inventory (MEP) Status: Listed

16. OTHER INFORMATION

References: Vendor Information. TLV's Threshold Limit Values and Biological Exposure Indices for 1992-1993. American Conference of Governmental Industrial Hygienists, 1992. The Merck Index, 11th Ed. Rahway, New Jersey: Merck and Co., Inc., 1989. Technical Judgment. Sax, N. Irving. Dangerous Properties of Industrial Materials, 7th Ed. New York: Van Nostrand Reinhold Co., 1989. CCINFO RTECS. Canadian Centre for Occupational Health and Safety. Hamilton, Ontario Canada: 30 June 1993. CCINFO MSDS/FTSS. Canadian Centre for Occupational Health and Safety. Hamilton, Ontario Canada: 30 June 1993. List of Dangerous Substances Classified in Annex I of the EEC Directive (67/548) - Classification, Packaging and Labeling of Dangerous Substances, Amended July 1992. Air Contaminants,

Federal Register, Vol. 54, No. 12. Thursday, January 19, 1989. pp. 2332-2983. 29 CFR 1900 - 1910 (Code of Federal Regulations - Labor).

Complete Text of H phrases referred to in Section 3: H272 May intensify fire; oxidiser. H302 Harmful if swallowed.

Revision Summary: Substantial revision to comply with EU Reg 1272/2008, Reg 1907/2006 and UN GHS (ST/SG/AC.10/36/Add.3).

Date of MSDS Preparation:

Day: 01

Month: October

Year: 2010

MSDS Prepared: MSDS prepared by Product Compliance Department extension 3350

CCOHS Evaluation Note: It is offered under the interim policy that was established by Health Canada permitting use of GHS-formatted safety data sheets in Canada prior to revision of CPR to GHS. It is offered under exemption from WHMIS labeling as specified in the Controlled Products Regulation (CPR) Section 17.

Legend:

NA - Not Applicable	w/w - weight/weight
ND - Not Determined	w/v - weight/volume
NV - Not Available	v/v - volume/volume

USER RESPONSIBILITY: Each user should read and understand this information and incorporate it in individual site safety programs in accordance with applicable hazard communication standards and regulations.

THE INFORMATION CONTAINED HEREIN IS BASED ON DATA CONSIDERED TO BE ACCURATE. HOWEVER, NO WARRANTY IS EXPRESSED OR IMPLIED REGARDING THE ACCURACY OF THESE DATA OR THE RESULTS TO BE OBTAINED FROM THE USE THEREOF.

World Headquarters
Hach Company
P.O.Box 389
Loveland, CO USA 80539
(970) 669-3050

MSDS No: M00135

MATERIAL SAFETY DATA SHEET

1. CHEMICAL PRODUCT AND COMPANY IDENTIFICATION

Product Name: FerroVer® Iron Reagent
Catalog Number: 2105769

Hach Company
P.O.Box 389
Loveland, CO USA 80539
(970) 669-3050

Emergency Telephone Numbers:
(Medical and Transportation)
(303) 623-5716 24 Hour Service
(515)232-2533 8am - 4pm CST

MSDS Number: M00135
Chemical Name: Not applicable
CAS No.: Not applicable
Chemical Formula: Not applicable
Chemical Family: Not applicable
Hazard: May cause allergic reaction. May cause irritation.
Date of MSDS Preparation:
Day: 15
Month: October
Year: 2009

2. COMPOSITION / INFORMATION ON INGREDIENTS

Sodium Thiosulfate
CAS No.: 10102-17-7
TSCA CAS Number: 7772-98-7
Percent Range: 45.0 - 55.0
Percent Range Units: weight / weight
LD50: Oral rat LD50 > 8 gm/kg
LC50: None reported
TLV: Not established
PEL: Not established
Hazard: May cause irritation.

1,10-Phenanthroline-p-toluenesulfonic Acid Salt
CAS No.: 92798-16-8
TSCA CAS Number: 92798-16-8
Percent Range: 1.0 - 5.0
Percent Range Units: weight / weight
LD50: None reported
LC50: None reported
TLV: Not established
PEL: Not established
Hazard: May cause irritation. Toxic properties unknown.

Sodium Hydrosulfite
CAS No.: 7775-14-6
TSCA CAS Number: 7775-14-6
Percent Range: 15.0 - 25.0
Percent Range Units: weight / weight
LD50: Oral rat LD50 > 500 mg/kg
LC50: None reported
TLV: Not established
PEL: Not established

Hazard: Allergen Causes moderate eye irritation. Flammable solid.

Sodium Citrate
CAS No.: 68-04-2
TSCA CAS Number: 68-04-2
Percent Range: 1.0 - 10.0
Percent Range Units: weight / weight
LD50: Oral rat LD50 >8 g/Kg
LC50: None reported
TLV: Not established
PEL: Not established
Hazard: May cause irritation.

Sodium Metabisulfite
CAS No.: 7681-57-4
TSCA CAS Number: 7681-57-4
Percent Range: 20.0 - 30.0
Percent Range Units: weight / weight
LD50: Oral rat LD_{50} = 1131 mg/kg
LC50: None reported
TLV: 5 mg/m^3 (ACGIH - TWA)
PEL: Not established
Hazard: May cause irritation. May cause allergic reaction.

3. HAZARDS IDENTIFICATION

Emergency Overview:
Appearance: White to light yellow crystals
Odor: Sulfur-like
MAY CAUSE EYE AND RESPIRATORY TRACT IRRITATION
MAY CAUSE ALLERGIC RESPIRATORY REACTION IF SWALLOWED OR INHALED

HMIS:
Health: 2
Flammability: 0
Reactivity: 1
Protective Equipment: X - See protective equipment, Section 8.
NFPA:
Health: 2
Flammability: 0
Reactivity: 1
Symbol: Not applicable
Potential Health Effects:
Eye Contact: May cause irritiation
Skin Contact: No effects are anticipated
Skin Absorption: None reported
Target Organs: None reported
Ingestion: May cause: allergic respiratory reaction gastrointestinal irritation circulatory disturbances central nervous system depression Very large doses may cause: abdominal pain diarrhea vomiting depression
Target Organs: None reported
Inhalation: May cause: respiratory tract irritation allergic respiratory reaction difficult breathing coughing rapid pulse and respirations chest pain blood pressure changes sweating flushing hives
Target Organs: None reported
Medical Conditions Aggravated: Sulfites are strong sensitizers. Inhalation and ingestion may cause allergic respiratory reactions in asthmatics. Persons with respiratory conditions should take special care when working with products that contain sulfites.
Chronic Effects: Chronic overexposure may cause allergic respiratory reactions
Cancer / Reproductive Toxicity Information:
This product does NOT contain any OSHA listed carcinogens.

An ingredient of this mixture is: IARC Group 3: Non-classifiable
Metabisulfites
This product does NOT contain any NTP listed chemicals.

Additional Cancer / Reproductive Toxicity Information: Contains: an experimental mutagen.
Toxicologically Synergistic Products: None reported

4. FIRST AID

Eye Contact: Immediately flush eyes with water for 15 minutes. Call physician.
Skin Contact (First Aid): Wash skin with soap and plenty of water.
Ingestion (First Aid): Give 1-2 glasses of water. Do not induce vomiting. Call physician immediately.
Inhalation: Give artificial respiration if necessary. Remove to fresh air. Call physician.

5. FIRE FIGHTING MEASURES

Flammable Properties: Can burn in fire, releasing toxic vapors.
Flash Point: Not applicable
Method: Not applicable
Flammability Limits:
Lower Explosion Limits: Not applicable
Upper Explosion Limits: Not applicable
Autoignition Temperature: Not determined
Hazardous Combustion Products: Toxic fumes of: sulfur oxides. sodium monoxide carbon monoxide, carbon dioxide.
Fire / Explosion Hazards: May react violently with: organic materials aluminum / aluminum compounds strong oxidizers combustible materials strong acids water
Static Discharge: None reported.
Mechanical Impact: None reported
Extinguishing Media: Carbon dioxide Alcohol foam. Dry chemical.
Fire Fighting Instruction: As in any fire, wear self-contained breathing apparatus pressure-demand and full protective gear.

6. ACCIDENTAL RELEASE MEASURES

Spill Response Notice:
Only persons properly qualified to respond to an emergency involving hazardous substances may respond to a spill according to federal regulations (OSHA 29 CFR 1910.120(a)(v)) and per your company's emergency response plan and guidelines/procedures. See Section 13, Special Instructions for disposal assistance.
Containment Technique: Stop spilled material from being released to the environment. Cover spilled solid material with sand or other inert material.
Clean-up Technique: Sweep up material. Dilute with a large excess of water. Adjust to a pH between 6 and 9 with an alkali, such as soda ash or sodium bicarbonate. Decontaminate the area of the spill with a soap solution.
Evacuation Procedure: Evacuate local area (15 foot radius or as directed by your facility's emergency response plan) when: any quantity is spilled. If conditions warrant, increase the size of the evacuation.
Special Instructions (for accidental release): Not applicable
304 EHS RQ (40 CFR 355): Not applicable
D.O.T. Emergency Response Guide Number: Not applicable

7. HANDLING / STORAGE

Handling: Avoid contact with eyes skin clothing Do not breathe dust. Wash thoroughly after handling. Maintain general industrial hygiene practices when using this product.
Storage: Store between 10° and 25°C. Protect from: heat moisture light Keep away from: acids / acid fumes. combustible materials organic material oxidizers
Flammability Class: Not applicable

8. EXPOSURE CONTROLS / PROTECTIVE EQUIPMENT

Engineering Controls: Have an eyewash station nearby. Use general ventilation to minimize exposure to mist, vapor or dust. Maintain general industrial hygiene practices when using this product.

Personal Protective Equipment:
Eye Protection: safety glasses with top and side shields
Skin Protection: disposable latex gloves lab coat
Inhalation Protection: adequate ventilation and / or dust / mist mask
Precautionary Measures: Avoid contact with: eyes skin clothing Do not breathe: dust Wash thoroughly after handling. Use with adequate ventilation. Protect from: heat Keep away from: acids/acid fumes organic materials combustible material oxidizers water
TLV: Not established
PEL: Not established

9. PHYSICAL / CHEMICAL PROPERTIES

Appearance: White to light yellow crystals
Physical State: Solid
Molecular Weight: Not applicable
Odor: Sulfur-like
pH: 5% solution = 5.29
Vapor Pressure: Not applicable
Vapor Density (air = 1): Not applicable
Boiling Point: Not applicable
Melting Point: decomposes at 192° C
Specific Gravity (water = 1): 2.27
Evaporation Rate (water = 1): Not applicable
Volatile Organic Compounds Content: Not determined
Partition Coefficient (n-octanol / water): Not determined
Solubility:
Water: Soluble
Acid: Soluble
Other: Not determined
Metal Corrosivity:
Steel: 0.106 in/yr
Aluminum: 0.003 in/yr

10. STABILITY / REACTIVITY

Chemical Stability: Stable when stored under proper conditions.
Conditions to Avoid: Exposure to light. Excess moisture Extreme temperatures
Reactivity / Incompatibility: Incompatible with: combustible materials organic materials oxidizers aluminum acids sodium nitrite sodium chlorite
Hazardous Decomposition: Heating to decomposition releases toxic and/or corrosive fumes of: sulfur oxides carbon monoxide carbon dioxide
Hazardous Polymerization: Will not occur.

11. TOXICOLOGICAL INFORMATION

Product Toxicological Data:
LD50: None reported
LC50: None reported
Dermal Toxicity Data: None reported
Skin and Eye Irritation Data: Erythema at 3 minutes, 1 hour, 4 hours, 24 hours, 48 hours, 72 hours = 0. Edema at 3 minutes, 1 hour, 4 hours, 24 hours, 48 hours, 72 hours = 0.
Mutation Data: Sodium Metabisulfite: cytogenetic analysis hamster ovary 180 µg/l; sister chromatid exchange on hamster ovary @ 200 µg/l.
Reproductive Effects Data: Sodium Metabisulfite: oral rat TDLo = 20 g/kg - effects on newborn - stillbirth; oral rat TDLo = 40 g/kg - effects on newborn - weaning or lactation index.
Ingredient Toxicological Data: Sodium Hydrosulfite Oral rat LD50 > 500 mg/kg; Sodium Thiosulfate Oral rat LD50 > 8 g/kg; Sodium Citrate Oral rat LD50 > 8 g/kg

12. ECOLOGICAL INFORMATION

Product Ecological Information: --
No ecological data available for this product.
Ingredient Ecological Information: Sodium Metabisulfite: 120 ppm / 24, 48 & 96 hours / mosquito fish / TLm / fresh water (converting bisulfite figure to metabisulfite); Sodium Thiosulfate: Aquatic toxicity: 24,000 mg / 1 / 96 hours / mosquito-fish / TLm / turbid water at 22 ° - 24° C.

13. DISPOSAL CONSIDERATIONS

EPA Waste ID Number: Not applicable
Special Instructions (Disposal): Dilute to 3 to 5 times the volume with cold water. Adjust to a pH between 6 and 9 with an alkali, such as soda ash or sodium bicarbonate. Open cold water tap completely, slowly pour the reacted material to the drain. Allow cold water to run for 5 minutes to completely flush the system.
Empty Containers: Rinse three times with an appropriate solvent. Dispose of empty container as normal trash.
NOTICE (Disposal): These disposal guidelines are based on federal regulations and may be superseded by more stringent state or local requirements. Please consult your local environmental regulators for more information.

14. TRANSPORT INFORMATION

D.O.T.:
D.O.T. Proper Shipping Name: Not Currently Regulated
--
DOT Hazard Class: NA
DOT Subsidiary Risk: NA
DOT ID Number: NA
DOT Packing Group: NA
I.C.A.O.:
I.C.A.O. Proper Shipping Name: Not Currently Regulated
--
ICAO Hazard Class: NA
ICAO Subsidiary Risk: NA
ICAO ID Number: NA
ICAO Packing Group: NA
I.M.O.:
I.M.O. Proper Shipping Name: Not Currently Regulated
--
I.M.O. Hazard Class: NA
I.M.O. Subsidiary Risk: NA
I.M.O. ID Number: NA
I.M.O. Packing Group: NA
Additional Information: There is a possibility that this product could be contained in a reagent set or kit composed of various compatible dangerous goods. If the item is NOT in a set or kit, the classification given above applies. If the item IS part of a set or kit, the classification would change to the following: UN3316 Chemical Kit, Class 9, PG II or III. If the item is not regulated, the Chemical Kit classification does not apply.

15. REGULATORY INFORMATION

U.S. Federal Regulations:
O.S.H.A.: This product meets the criteria for a hazardous substance as defined in the Hazard Communication Standard. (29 CFR 1910.1200)
E.P.A.:
S.A.R.A. Title III Section 311/312 Categorization (40 CFR 370): Immediate (Acute) Health Hazard Delayed (Chronic) Health Hazard
S.A.R.A. Title III Section 313 (40 CFR 372): This product does NOT contain any chemical subject to the reporting requirements of Section 313 of Title III of SARA.
--
302 (EHS) TPQ (40 CFR 355): Not applicable
304 CERCLA RQ (40 CFR 302.4): Not applicable
304 EHS RQ (40 CFR 355): Not applicable
Clean Water Act (40 CFR 116.4): Not applicable

RCRA: Contains no RCRA regulated substances.
C.P.S.C.: Not applicable
State Regulations:
California Prop. 65: No Prop. 65 listed chemicals are present in this product.
Identification of Prop. 65 Ingredient(s): Not applicable
California Perchlorate Rule CCR Title 22 Chap 33:
Trade Secret Registry: Not applicable
National Inventories:
U.S. Inventory Status: All ingredients in this product are listed on the TSCA 8(b) Inventory (40 CFR 710).
TSCA CAS Number: Not applicable

16. OTHER INFORMATION

Intended Use: Iron determination
References: CCINFO MSDS/FTSS. Canadian Centre for Occupational Health and Safety. Hamilton, Ontario Canada: 30 June 1993. NIOSH Registry of Toxic Effects of Chemical Substances, 1985-86. Cincinnati: U.S. Department of Health and Human Services, April, 1987. Outside Testing. Vendor Information. Gosselin, R. E. et al. Clinical Toxicology of Commercial Products, 5th Ed. Baltimore: The Williams and Wilkins Co., 1984. Sax, N. Irving. Dangerous Properties of Industrial Materials, 7th Ed. New York: Van Nostrand Reinhold Co., 1989. Fire Protection Guide on Hazardous Materials, 10th Ed. Quincy, MA: National Fire Protection Fire Protection Guide on Hazardous Materials, 10th Ed. Quincy, MA: National Fire Protection Association, 1991. Technical Judgment. In-house information. TLV's Threshold Limit Values and Biological Exposure Indices for 1992-1993. American Conference of Governmental Industrial Hygienists, 1992. Air Contaminants, Federal Register, Vol. 54, No. 12. Thursday, January 19, 1989. pp. 2332-2983.
Revision Summary: Updates in Section(s) 14,

Legend:

NA - Not Applicable	w/w - weight/weight
ND - Not Determined	w/v - weight/volume
NV - Not Available	v/v - volume/volume

USER RESPONSIBILITY: Each user should read and understand this information and incorporate it in individual site safety programs in accordance with applicable hazard communication standards and regulations.

THE INFORMATION CONTAINED HEREIN IS BASED ON DATA CONSIDERED TO BE ACCURATE. HOWEVER, NO WARRANTY IS EXPRESSED OR IMPLIED REGARDING THE ACCURACY OF THESE DATA OR THE RESULTS TO BE OBTAINED FROM THE USE THEREOF.

World Headquarters
Hach Company
P.O.Box 389
Loveland, CO USA 80539
(970) 669-3050

MSDS No: M00135

MATERIAL SAFETY DATA SHEET

1. CHEMICAL PRODUCT AND COMPANY IDENTIFICATION

Product Name: FerroVer ® Iron Reagent
Catalog Number: 2507025

Hach Company
P.O.Box 389
Loveland, CO USA 80539
(970) 669-3050

Emergency Telephone Numbers:
(Medical and Transportation)
(303) 623-5716 24 Hour Service
(515)232-2533 8am - 4pm CST

MSDS Number: M00135
Chemical Name: Not applicable
CAS No.: Not applicable
Chemical Formula: Not applicable
Chemical Family: Not applicable
Hazard: May cause allergic reaction. May cause irritation.
Date of MSDS Preparation:
Day: 15
Month: October
Year: 2009

2. COMPOSITION / INFORMATION ON INGREDIENTS

Sodium Thiosulfate
CAS No.: 10102-17-7
TSCA CAS Number: 7772-98-7
Percent Range: 45.0 - 55.0
Percent Range Units: weight / weight
LD50: Oral rat LD50 > 8 gm/kg
LC50: None reported
TLV: Not established
PEL: Not established
Hazard: May cause irritation.

1,10-Phenanthroline-p-toluenesulfonic Acid Salt
CAS No.: 92798-16-8
TSCA CAS Number: 92798-16-8
Percent Range: 1.0 - 5.0
Percent Range Units: weight / weight
LD50: None reported
LC50: None reported
TLV: Not established
PEL: Not established
Hazard: May cause irritation. Toxic properties unknown.

Sodium Hydrosulfite
CAS No.: 7775-14-6
TSCA CAS Number: 7775-14-6
Percent Range: 15.0 - 25.0
Percent Range Units: weight / weight
LD50: Oral rat LD50 > 500 mg/kg
LC50: None reported
TLV: Not established

PEL: Not established
Hazard: Allergen Causes moderate eye irritation. Flammable solid.

Sodium Citrate
CAS No.: 68-04-2
TSCA CAS Number: 68-04-2
Percent Range: 1.0 - 10.0
Percent Range Units: weight / weight
LD50: Oral rat LD50 >8 g/Kg
LC50: None reported
TLV: Not established
PEL: Not established
Hazard: May cause irritation.

Sodium Metabisulfite
CAS No.: 7681-57-4
TSCA CAS Number: 7681-57-4
Percent Range: 20.0 - 30.0
Percent Range Units: weight / weight
LD50: Oral rat LD_{50} = 1131 mg/kg
LC50: None reported
TLV: 5 mg/m^3 (ACGIH - TWA)
PEL: Not established
Hazard: May cause irritation. May cause allergic reaction.

3. HAZARDS IDENTIFICATION

Emergency Overview:
Appearance: White to light yellow crystals
Odor: Sulfur-like
MAY CAUSE EYE AND RESPIRATORY TRACT IRRITATION
MAY CAUSE ALLERGIC RESPIRATORY REACTION IF SWALLOWED OR INHALED

HMIS:
Health: 2
Flammability: 0
Reactivity: 1
Protective Equipment: X - See protective equipment, Section 8.
NFPA:
Health: 2
Flammability: 0
Reactivity: 1
Symbol: Not applicable
Potential Health Effects:
Eye Contact: May cause irritiation
Skin Contact: No effects are anticipated
Skin Absorption: None reported
Target Organs: None reported
Ingestion: May cause: allergic respiratory reaction gastrointestinal irritation circulatory disturbances central nervous system depression Very large doses may cause: abdominal pain diarrhea vomiting depression
Target Organs: None reported
Inhalation: May cause: respiratory tract irritation allergic respiratory reaction difficult breathing coughing rapid pulse and respirations chest pain blood pressure changes sweating flushing hives
Target Organs: None reported
Medical Conditions Aggravated: Sulfites are strong sensitizers. Inhalation and ingestion may cause allergic respiratory reactions in asthmatics. Persons with respiratory conditions should take special care when working with products that contain sulfites.
Chronic Effects: Chronic overexposure may cause allergic respiratory reactions
Cancer / Reproductive Toxicity Information:
This product does NOT contain any OSHA listed carcinogens.

An ingredient of this mixture is: IARC Group 3: Non-classifiable
Metabisulfites
This product does NOT contain any NTP listed chemicals.

Additional Cancer / Reproductive Toxicity Information: Contains: an experimental mutagen.
Toxicologically Synergistic Products: None reported

4. FIRST AID

Eye Contact: Immediately flush eyes with water for 15 minutes. Call physician.
Skin Contact (First Aid): Wash skin with soap and plenty of water.
Ingestion (First Aid): Give 1-2 glasses of water. Do not induce vomiting. Call physician immediately.
Inhalation: Give artificial respiration if necessary. Remove to fresh air. Call physician.

5. FIRE FIGHTING MEASURES

Flammable Properties: Can burn in fire, releasing toxic vapors.
Flash Point: Not applicable
Method: Not applicable
Flammability Limits:
Lower Explosion Limits: Not applicable
Upper Explosion Limits: Not applicable
Autoignition Temperature: Not determined
Hazardous Combustion Products: Toxic fumes of: sulfur oxides. sodium monoxide carbon monoxide, carbon dioxide.
Fire / Explosion Hazards: May react violently with: organic materials aluminum / aluminum compounds strong oxidizers combustible materials strong acids water
Static Discharge: None reported.
Mechanical Impact: None reported
Extinguishing Media: Carbon dioxide Alcohol foam. Dry chemical.
Fire Fighting Instruction: As in any fire, wear self-contained breathing apparatus pressure-demand and full protective gear.

6. ACCIDENTAL RELEASE MEASURES

Spill Response Notice:
Only persons properly qualified to respond to an emergency involving hazardous substances may respond to a spill according to federal regulations (OSHA 29 CFR 1910.120(a)(v)) and per your company's emergency response plan and guidelines/procedures. See Section 13, Special Instructions for disposal assistance.
Containment Technique: Stop spilled material from being released to the environment. Cover spilled solid material with sand or other inert material.
Clean-up Technique: Sweep up material. Dilute with a large excess of water. Adjust to a pH between 6 and 9 with an alkali, such as soda ash or sodium bicarbonate. Decontaminate the area of the spill with a soap solution.
Evacuation Procedure: Evacuate local area (15 foot radius or as directed by your facility's emergency response plan) when: any quantity is spilled. If conditions warrant, increase the size of the evacuation.
Special Instructions (for accidental release): Not applicable
304 EHS RQ (40 CFR 355): Not applicable
D.O.T. Emergency Response Guide Number: Not applicable

7. HANDLING / STORAGE

Handling: Avoid contact with eyes skin clothing Do not breathe dust. Wash thoroughly after handling. Maintain general industrial hygiene practices when using this product.
Storage: Store between 10° and 25°C. Protect from: heat moisture light Keep away from: acids / acid fumes. combustible materials organic material oxidizers
Flammability Class: Not applicable

8. EXPOSURE CONTROLS / PROTECTIVE EQUIPMENT

Engineering Controls: Have an eyewash station nearby. Use general ventilation to minimize exposure to mist, vapor or dust. Maintain general industrial hygiene practices when using this product.
Personal Protective Equipment:
Eye Protection: safety glasses with top and side shields
Skin Protection: disposable latex gloves lab coat
Inhalation Protection: adequate ventilation and / or dust / mist mask
Precautionary Measures: Avoid contact with: eyes skin clothing Do not breathe: dust Wash thoroughly after handling. Use with adequate ventilation. Protect from: heat Keep away from: acids/acid fumes organic materials combustible material oxidizers water
TLV: Not established
PEL: Not established

9. PHYSICAL / CHEMICAL PROPERTIES

Appearance: White to light yellow crystals
Physical State: Solid
Molecular Weight: Not applicable
Odor: Sulfur-like
pH: 5% solution = 5.29
Vapor Pressure: Not applicable
Vapor Density (air = 1): Not applicable
Boiling Point: Not applicable
Melting Point: decomposes at 192° C
Specific Gravity (water = 1): 2.27
Evaporation Rate (water = 1): Not applicable
Volatile Organic Compounds Content: Not determined
Partition Coefficient (n-octanol / water): Not determined
Solubility:
Water: Soluble
Acid: Soluble
Other: Not determined
Metal Corrosivity:
Steel: 0.106 in/yr
Aluminum: 0.003 in/yr

10. STABILITY / REACTIVITY

Chemical Stability: Stable when stored under proper conditions.
Conditions to Avoid: Exposure to light. Excess moisture Extreme temperatures
Reactivity / Incompatibility: Incompatible with: combustible materials organic materials oxidizers aluminum acids sodium nitrite sodium chlorite
Hazardous Decomposition: Heating to decomposition releases toxic and/or corrosive fumes of: sulfur oxides carbon monoxide carbon dioxide
Hazardous Polymerization: Will not occur.

11. TOXICOLOGICAL INFORMATION

Product Toxicological Data:
LD50: None reported
LC50: None reported
Dermal Toxicity Data: None reported
Skin and Eye Irritation Data: Erythema at 3 minutes, 1 hour, 4 hours, 24 hours, 48 hours, 72 hours = 0. Edema at 3 minutes, 1 hour, 4 hours, 24 hours, 48 hours, 72 hours = 0.
Mutation Data: Sodium Metabisulfite: cytogenetic analysis hamster ovary 180 µg/l; sister chromatid exchange on hamster ovary @ 200 µg/l.
Reproductive Effects Data: Sodium Metabisulfite: oral rat TDLo = 20 g/kg - effects on newborn - stillbirth; oral rat TDLo = 40 g/kg - effects on newborn - weaning or lactation index.
Ingredient Toxicological Data: Sodium Hydrosulfite Oral rat LD50 > 500 mg/kg; Sodium Thiosulfate Oral rat LD50 > 8 g/kg; Sodium Citrate Oral rat LD50 > 8 g/kg

12. ECOLOGICAL INFORMATION

Product Ecological Information: --
No ecological data available for this product.
Ingredient Ecological Information: Sodium Metabisulfite: 120 ppm / 24, 48 & 96 hours / mosquito fish / TLm / fresh water (converting bisulfite figure to metabisulfite); Sodium Thiosulfate: Aquatic toxicity: 24,000 mg / 1 / 96 hours / mosquito-fish / TLm / turbid water at 22 ° - 24° C.

---

13. DISPOSAL CONSIDERATIONS

EPA Waste ID Number: Not applicable
Special Instructions (Disposal): Dilute to 3 to 5 times the volume with cold water. Adjust to a pH between 6 and 9 with an alkali, such as soda ash or sodium bicarbonate. Open cold water tap completely, slowly pour the reacted material to the drain. Allow cold water to run for 5 minutes to completely flush the system.
Empty Containers: Rinse three times with an appropriate solvent. Dispose of empty container as normal trash.
NOTICE (Disposal): These disposal guidelines are based on federal regulations and may be superseded by more stringent state or local requirements. Please consult your local environmental regulators for more information.

---

14. TRANSPORT INFORMATION

D.O.T.:
D.O.T. Proper Shipping Name: Not Currently Regulated
--
DOT Hazard Class: NA
DOT Subsidiary Risk: NA
DOT ID Number: NA
DOT Packing Group: NA
I.C.A.O.:
I.C.A.O. Proper Shipping Name: Not Currently Regulated
--
ICAO Hazard Class: NA
ICAO Subsidiary Risk: NA
ICAO ID Number: NA
ICAO Packing Group: NA
I.M.O.:
I.M.O. Proper Shipping Name: Not Currently Regulated
--
I.M.O. Hazard Class: NA
I.M.O. Subsidiary Risk: NA
I.M.O. ID Number: NA
I.M.O. Packing Group: NA
Additional Information: There is a possibility that this product could be contained in a reagent set or kit composed of various compatible dangerous goods. If the item is NOT in a set or kit, the classification given above applies. If the item IS part of a set or kit, the classification would change to the following: UN3316 Chemical Kit, Class 9, PG II or III. If the item is not regulated, the Chemical Kit classification does not apply.

---

15. REGULATORY INFORMATION

U.S. Federal Regulations:
O.S.H.A.: This product meets the criteria for a hazardous substance as defined in the Hazard Communication Standard. (29 CFR 1910.1200)
E.P.A.:
S.A.R.A. Title III Section 311/312 Categorization (40 CFR 370): Immediate (Acute) Health Hazard Delayed (Chronic) Health Hazard
S.A.R.A. Title III Section 313 (40 CFR 372): This product does NOT contain any chemical subject to the reporting requirements of Section 313 of Title III of SARA.
--
302 (EHS) TPQ (40 CFR 355): Not applicable
304 CERCLA RQ (40 CFR 302.4): Not applicable
304 EHS RQ (40 CFR 355): Not applicable

Clean Water Act (40 CFR 116.4): Not applicable
RCRA: Contains no RCRA regulated substances.
C.P.S.C.: Not applicable
State Regulations:
California Prop. 65: No Prop. 65 listed chemicals are present in this product.
Identification of Prop. 65 Ingredient(s): Not applicable
California Perchlorate Rule CCR Title 22 Chap 33:
Trade Secret Registry: Not applicable
National Inventories:
U.S. Inventory Status: All ingredients in this product are listed on the TSCA 8(b) Inventory (40 CFR 710).
TSCA CAS Number: Not applicable

16. OTHER INFORMATION

Intended Use: Iron determination
References: CCINFO MSDS/FTSS. Canadian Centre for Occupational Health and Safety. Hamilton, Ontario Canada: 30 June 1993. NIOSH Registry of Toxic Effects of Chemical Substances, 1985-86. Cincinnati: U.S. Department of Health and Human Services, April, 1987. Outside Testing. Vendor Information. Gosselin, R. E. et al. Clinical Toxicology of Commercial Products, 5th Ed. Baltimore: The Williams and Wilkins Co., 1984. Sax, N. Irving. Dangerous Properties of Industrial Materials, 7th Ed. New York: Van Nostrand Reinhold Co., 1989. Fire Protection Guide on Hazardous Materials, 10th Ed. Quincy, MA: National Fire Protection Fire Protection Guide on Hazardous Materials, 10th Ed. Quincy, MA: National Fire Protection Association, 1991. Technical Judgment. In-house information. TLV's Threshold Limit Values and Biological Exposure Indices for 1992-1993. American Conference of Governmental Industrial Hygienists, 1992. Air Contaminants, Federal Register, Vol. 54, No. 12. Thursday, January 19, 1989. pp. 2332-2983.
Revision Summary: Updates in Section(s) 14,

Legend:

NA - Not Applicable	w/w - weight/weight
ND - Not Determined	w/v - weight/volume
NV - Not Available	v/v - volume/volume

USER RESPONSIBILITY: Each user should read and understand this information and incorporate it in individual site safety programs in accordance with applicable hazard communication standards and regulations.

THE INFORMATION CONTAINED HEREIN IS BASED ON DATA CONSIDERED TO BE ACCURATE. HOWEVER, NO WARRANTY IS EXPRESSED OR IMPLIED REGARDING THE ACCURACY OF THESE DATA OR THE RESULTS TO BE OBTAINED FROM THE USE THEREOF.

MATERIAL SAFETY DATA SHEET

ALCONOX®

Prepared to U.S. OSHA, CMA, ANSI, Canadian WHMIS, Australian WorkSafe, Japanese Industrial Standard JIS Z 7250:2000, and European Union REACH Regulations

SECTION 1 - PRODUCT AND COMPANY IDENTIFICATION

PRODUCT NAME:	**ALCONOX®**
CHEMICAL FAMILY NAME:	Detergent.
PRODUCT USE:	Critical-cleaning detergent for laboratory, healthcare and industrial applications
U.N. NUMBER:	Not Applicable
U.N. DANGEROUS GOODS CLASS:	Non-Regulated Material
SUPPLIER/MANUFACTURER'S NAME:	Alconox, Inc.
ADDRESS:	30 Glenn St., Suite 309, White Plains, NY 10603. USA
EMERGENCY PHONE:	**TOLL-FREE in USA/Canada** 800-255-3924
	International calls 813-248-0585
BUSINESS PHONE:	914-948-4040
DATE OF PREPARATION:	May 2011
DATE OF LAST REVISION:	February 2008

SECTION 2 - HAZARDS IDENTIFICATION

EMERGENCY OVERVIEW: This product is a white granular powder with little or no odor. Exposure can be irritating to eyes, respiratory system and skin. It is a non-flammable solid. The Environmental effects of this product have not been investigated.

US DOT SYMBOLS

Non-Regulated

CANADA (WHMIS) SYMBOLS

EUROPEAN and (GHS) Hazard Symbols

Signal Word: **Warning!**

EU LABELING AND CLASSIFICATION:

Classification of the substance or mixture according to Regulation (EC) No1272/2008 Annex 1
EC# 205-633-8 This substance is not classified in the Annex I of Directive 67/548/EEC
EC# 268-356-1 This substance is not classified in the Annex I of Directive 67/548/EEC
EC# 231-838-7 This substance is not classified in the Annex I of Directive 67/548/EEC
EC# 231-767-1 This substance is not classified in the Annex I of Directive 67/548/EEC
EC# 207-638-8 Index# 011-005-00-2
EC# 205-788-1 This substance is not classified in the Annex I of Directive 67/548/EEC

GHS Hazard Classification(s):

Eye Irritant Category 2A

Hazard Statement(s):

H319: Causes serious eye irritation

Precautionary Statement(s):

P260: Do not breath dust/fume/gas/mist/vapors/spray
P264: Wash hands thoroughly after handling
P271: Use only in well ventilated area.
P280: Wear protective gloves/protective clothing/eye protection/face protection/

Hazard Symbol(s):

[Xi] Irritant

Risk Phrases:
R20: Harmful by inhalation
R36/37/38: Irritating to eyes, respiratory system and skin

Safety Phrases:
S8: Keep container dry
S22: Do not breath dust
S24/25: Avoid contact with skin and eyes

HEALTH HAZARDS OR RISKS FROM EXPOSURE:

ACUTE: Exposure to this product may cause irritation of the eyes, respiratory system and skin. Ingestion may cause gastrointestinal irritation including pain, vomiting or diarrhea.

CHRONIC: This product contains an ingredient which may be corrosive.

TARGET ORGANS: ACUTE: Eye, respiratory System, Skin CHRONIC: None Known

SECTION 3 - COMPOSITION and INFORMATION ON INGREDIENTS

HAZARDOUS INGREDIENTS:	CAS #	EINECS #	ICSC #	WT %	HAZARD CLASSIFICATION; RISK PHRASES
Sodium Bicarbonate	144-55-8	205-633-8	1044	33 - 43%	HAZARD CLASSIFICATION: None RISK PHRASES: None
Sodium (C10 – C16) Alkylbenzene Sulfonate	68081-81-2	268-356-1	Not Listed	10 – 20%	HAZARD CLASSIFICATION: None RISK PHRASES: None
Sodium Tripolyphosphate	7758-29-4	231-838-7	1469	5 - 15%	HAZARD CLASSIFICATION: None RISK PHRASES: None
Tetrasodium Pyrophosphate	7722-88-5	231-767-1	1140	5 - 15%	HAZARD CLASSIFICATION: None RISK PHRASES: None
Sodium Carbonate	497-19-8	207-638-8	1135	1 - 10%	HAZARD CLASSIFICATION: [Xi] Irritant RISK PHRASES: R36
Sodium Alcohol Sulfate	151-21-3	205-788-1	0502	1 – 5%	HAZARD CLASSIFICATION: None RISK PHRASES: None
Balance of other ingredients are non-hazardous or less than 1% in concentration (or 0.1% for carcinogens, reproductive toxins, or respiratory sensitizers).					

NOTE: ALL WHMIS required information is included in appropriate sections based on the ANSI Z400.1-2004 format. This product has been classified in accordance with the hazard criteria of the CPR and the MSDS contains all the information required by the CPR, EU Directives and the Japanese Industrial Standard *JIS Z 7250: 2000*.

SECTION 4 - FIRST-AID MEASURES

Contaminated individuals of chemical exposure must be taken for medical attention if any adverse effect occurs. Rescuers should be taken for medical attention, if necessary. Take copy of label and MSDS to health professional with contaminated individual.

EYE CONTACT: If product enters the eyes, open eyes while under gentle running water for at least 15 minutes. Seek medical attention if irritation persists.

SKIN CONTACT: Wash skin thoroughly after handling. Seek medical attention if irritation develops and persists. Remove contaminated clothing. Launder before re-use.

INHALATION: If breathing becomes difficult, remove victim to fresh air. If necessary, use artificial respiration to support vital functions. Seek medical attention if breathing dificulty continues.

INGESTION: If product is swallowed, call physician or poison control center for most current information. If professional advice is not available, do not induce vomiting. Never induce vomiting or give diluents (milk or water) to someone who is unconscious, having convulsions, or who cannot swallow. Seek medical advice. Take a copy of the label and/or MSDS with the victim to the health professional.

MEDICAL CONDITIONS AGGRAVATED BY EXPOSURE: Pre-existing skin, or eye problems may be aggravated by prolonged contact.

RECOMMENDATIONS TO PHYSICIANS: Treat symptoms and reduce over-exposure.

SECTION 5 - FIRE-FIGHTING MEASURES

FLASH POINT: Not Flammable
AUTOIGNITION TEMPERATURE: Not Applicable
FLAMMABLE LIMITS (in air by volume, %): Lower (LEL): NA Upper (UEL): NA
FIRE EXTINGUISHING MATERIALS: As appropriate for surrounding fire. Carbon dioxide, foam, dry chemical, halon, or water spray.

UNUSUAL FIRE AND EXPLOSION HAZARDS: This product is non-flammable and has no known explosion hazards.
Explosion Sensitivity to Mechanical Impact: Not Sensitive.
Explosion Sensitivity to Static Discharge: Not Sensitive
SPECIAL FIRE-FIGHTING PROCEDURES: Incipient fire responders should wear eye protection. Structural firefighters must wear Self-Contained Breathing Apparatus and full protective equipment. Isolate materials not yet involved in the fire and protect personnel. Move containers from fire area if this can be done without risk; otherwise, cool with carefully applied water spray. If possible, prevent runoff water from entering storm drains, bodies of water, or other environmentally sensitive areas.

NFPA RATING SYSTEM

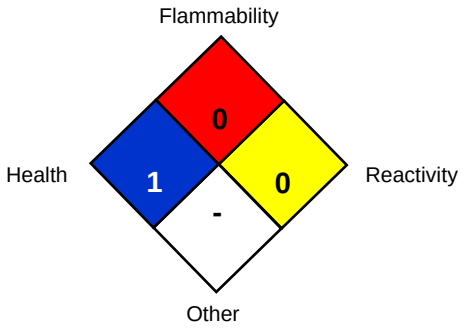

HMIS RATING SYSTEM

HAZARDOUS MATERIAL IDENTIFICATION SYSTEM

HEALTH HAZARD (BLUE)	**1**
FLAMMABILITY HAZARD (RED)	**0**
PHYSICAL HAZARD (YELLOW)	**0**

PROTECTIVE EQUIPMENT

EYES	RESPIRATORY	HANDS	BODY
	See Sect 8		See Sect 8

For Routine Industrial Use and Handling Applications

Hazard Scale: 0 = Minimal **1** = Slight **2** = Moderate **3** = Serious **4** = Severe * = Chronic hazard

SECTION 6 - ACCIDENTAL RELEASE MEASURES

SPILL AND LEAK RESPONSE: Personnel should be trained for spill response operations.
SPILLS: Contain spill if safe to do so. Prevent entry into drains, sewers, and other waterways. Sweep, shovel or vacuum spilled material and place in an appropriate container for re-use or disposal. Avoid dust generation if possible. Dispose of in accordance with applicable Federal, State, and local procedures (see Section 13, Disposal Considerations).

SECTION 7 - HANDLING and STORAGE

WORK PRACTICES AND HYGIENE PRACTICES: As with all chemicals, avoid getting this product ON YOU or IN YOU. Wash thoroughly after handling this product. Do not eat, drink, smoke, or apply cosmetics while handling this product. Avoid breathing dusts generated by this product. Use in a well-ventilated location. Remove contaminated clothing immediately.

STORAGE AND HANDLING PRACTICES: Containers of this product must be properly labeled. Store containers in a cool, dry location. Keep container tightly closed when not in use. Store away from strong acids or oxidizers.

SECTION 8 - EXPOSURE CONTROLS - PERSONAL PROTECTION

EXPOSURE LIMITS/GUIDELINES:

Chemical Name	CAS#	ACGIH TWA	OSHA TWA	SWA
Sodium Bicarbonate	144-55-8	10 mg/m³ Total Dust	15 mg/m³ Total Dust	10 mg/m³ Total Dust
Sodium (C10 – C16) Alkylbenzene Sulfonate	68081-81-2	10 mg/m³ Total Dust	15 mg/m³ Total Dust	10 mg/m³ Total Dust
Sodium Tripolyphosphate	7758-29-4	10 mg/m³ Total Dust	15 mg/m³ Total Dust	10 mg/m³ Total Dust
Tetrasodium Pyrophosphate	7722-88-5	5 mg/m³	5 mg/m³	5 mg/m³
Sodium Carbonate	497-19-8	10 mg/m³ Total Dust	15 mg/m³ Total Dust	10 mg/m³ Total Dust
Sodium Alcohol Sulfate	151-21-3	10 mg/m³ Total Dust	15 mg/m³ Total Dust	10 mg/m³ Total Dust

Currently, International exposure limits are not established for the components of this product. Please check with competent authority in each country for the most recent limits in place.

VENTILATION AND ENGINEERING CONTROLS: Use with adequate ventilation to ensure exposure levels are maintained below the limits provided below. Use local exhaust ventilation to control airborne dust. Ensure eyewash/safety shower stations are available near areas where this product is used.

The following information on appropriate Personal Protective Equipment is provided to assist employers in complying with OSHA regulations found in 29 CFR Subpart I (beginning at 1910.132) or equivalent standard of Canada, or standards of EU member states (including EN 149 for respiratory PPE, and EN 166 for face/eye protection), and those of Japan. Please reference applicable regulations and standards for relevant details.

RESPIRATORY PROTECTION: Based on test data, exposure limits should not be exceeded under normal use conditions when using Alconox Detergent. Maintain airborne contaminant concentrations below guidelines listed above, if applicable. If necessary, use only respiratory protection authorized in the U.S. Federal OSHA Respiratory Protection Standard (29 CFR 1910.134), equivalent U.S. State standards, Canadian CSA Standard Z94.4-93, the European Standard EN149, or EU member states.

EYE PROTECTION: Safety glasses. If necessary, refer to U.S. OSHA 29 CFR 1910.133 or appropriate Canadian Standards.

HAND PROTECTION: Use chemical resistant gloves to prevent skin contact.. If necessary, refer to U.S. OSHA 29 CFR 1910.138 or appropriate Standards of Canada.

BODY PROTECTION: Use body protection appropriate to prevent contact (e.g. lab coat, overalls). If necessary, refer to appropriate Standards of Canada, or appropriate Standards of the EU, Australian Standards, or relevant Japanese Standards.

SECTION 9 - PHYSICAL and CHEMICAL PROPERTIES

PHYSICAL STATE:	Solid
APPEARANCE & ODOR:	White granular powder with little or no odor.
ODOR THRESHOLD (PPM):	Not Available
VAPOR PRESSURE (mmHg):	Not Applicable
VAPOR DENSITY (AIR=1):	Not Applicable.
BY WEIGHT:	Not Available
EVAPORATION RATE (nBuAc = 1):	Not Applicable.
BOILING POINT (C°):	Not Applicable.
FREEZING POINT (C°):	Not Applicable.
pH:	9.5 (1% aqueous solution)
SPECIFIC GRAVITY 20°C: (WATER =1)	0.85 – 1.1
SOLUBILITY IN WATER (%)	>10% w/w
COEFFICIENT OF WATER/OIL DIST.:	Not Available
VOC:	None
CHEMICAL FAMILY:	Detergent

SECTION 10 - STABILITY and REACTIVITY

STABILITY: Product is stable
DECOMPOSITION PRODUCTS: When heated to decomposition this product produces Oxides of carbon (COx)
MATERIALS WITH WHICH SUBSTANCE IS INCOMPATIBLE: Strong acids and strong oxidizing agents.
HAZARDOUS POLYMERIZATION: Will not occur.
CONDITIONS TO AVOID: Contact with incompatible materials and dust generation.

SECTION 11 - TOXICOLOGICAL INFORMATION

TOXICITY DATA: Toxicity data is available for mixture:

CAS# 497-19-8 LD50 Oral (Rat)	4090 mg/kg
CAS# 497-19-8 LD50 Oral (Mouse)	6600 mg/kg
CAS# 497-19-8 LC50 Inhalation (Rat)	2300 mg/m³ 2H
CAS# 497-19-8 LC50 Inhalation (Mouse)	1200 mg/m³ 2H
CAS# 7758-29-4 LD50 Oral (Rat)	3120 mg/kg
CAS# 7758-29-4 LD50 Oral (Mouse)	3100 mg/kg
CAS# 7722-88-5 LD50 Oral (Rat)	4000 mg/kg

SUSPECTED CANCER AGENT: None of the ingredients are found on the following lists: FEDERAL OSHA Z LIST, NTP, CAL/OSHA, IARC and therefore is not considered to be, nor suspected to be a cancer-causing agent by these agencies.
IRRITANCY OF PRODUCT: Contact with this product can be irritating to exposed skin, eyes and respiratory system.
SENSITIZATION OF PRODUCT: This product is not considered a sensitizer.
REPRODUCTIVE TOXICITY INFORMATION: No information concerning the effects of this product and its components on the human reproductive system.

SECTION 12 - ECOLOGICAL INFORMATION

ALL WORK PRACTICES MUST BE AIMED AT ELIMINATING ENVIRONMENTAL CONTAMINATION.
ENVIRONMENTAL STABILITY: No Data available at this time.
EFFECT OF MATERIAL ON PLANTS or ANIMALS: No evidence is currently available on this product's effects on plants or animals.

EFFECT OF CHEMICAL ON AQUATIC LIFE: No evidence is currently available on this product's effects on aquatic life.

SECTION 13 - DISPOSAL CONSIDERATIONS

PREPARING WASTES FOR DISPOSAL: Waste disposal must be in accordance with appropriate Federal, State, and local regulations, those of Canada, Australia, EU Member States and Japan.

SECTION 14 - TRANSPORTATION INFORMATION

US DOT; IATA; IMO; ADR:
THIS PRODUCT IS NOT HAZARDOUS AS DEFINED BY 49 CFR 172.101 BY THE U.S. DEPARTMENT OF TRANSPORTATION.
PROPER SHIPPING NAME: Non-Regulated Material
HAZARD CLASS NUMBER and DESCRIPTION: Not Applicable
UN IDENTIFICATION NUMBER: Not Applicable
PACKING GROUP: Not Applicable.
DOT LABEL(S) REQUIRED: Not Applicable
NORTH AMERICAN EMERGENCY RESPONSE GUIDEBOOK NUMBER (2004): Not Applicable
MARINE POLLUTANT: None of the ingredients are classified by the DOT as a Marine Pollutant (as defined by 49 CFR 172.101, Appendix B)

U.S. DEPARTMENT OF TRANSPORTATION (DOT) SHIPPING REGULATIONS:
This product is not classified as dangerous goods, per U.S. DOT regulations, under 49 CFR 172.101.

TRANSPORT CANADA, TRANSPORTATION OF DANGEROUS GOODS REGULATIONS:
This product is not classified as Dangerous Goods, per regulations of Transport Canada.

INTERNATIONAL AIR TRANSPORT ASSOCIATION (IATA):
This product is not classified as Dangerous Goods, by rules of IATA:

INTERNATIONAL MARITIME ORGANIZATION (IMO) DESIGNATION:
This product is not classified as Dangerous Goods by the International Maritime Organization.

EUROPEAN AGREEMENT CONCERNING THE INTERNATIONAL CARRIAGE OF DANGEROUS GOODS BY ROAD (ADR):

This product is not classified by the United Nations Economic Commission for Europe to be dangerous goods.

SECTION 15 - REGULATORY INFORMATION

UNITED STATES REGULATIONS

SARA REPORTING REQUIREMENTS: This product is not subject to the reporting requirements of Sections 302, 304 and 313 of Title III of the Superfund Amendments and Reauthorization Act., as follows: None

TSCA: All components in this product are listed on the US Toxic Substances Control Act (TSCA) inventory of chemicals.

SARA 311/312:

Acute Health: Yes Chronic Health: No Fire: No Reactivity: No

U.S. SARA THRESHOLD PLANNING QUANTITY: There are no specific Threshold Planning Quantities for this product. The default Federal MSDS submission and inventory requirement filing threshold of 10,000 lb (4,540 kg) may apply, per 40 CFR 370.20.

U.S. CERCLA REPORTABLE QUANTITY (RQ): None

CALIFORNIA SAFE DRINKING WATER AND TOXIC ENFORCEMENT ACT (PROPOSITION 65): None of the ingredients are on the California Proposition 65 lists.

CANADIAN REGULATIONS:

CANADIAN DSL/NDSL INVENTORY STATUS: All of the components of this product are on the DSL Inventory

CANADIAN ENVIRONMENTAL PROTECTION ACT (CEPA) PRIORITIES SUBSTANCES LISTS: No component of this product is on the CEPA First Priorities Substance Lists.

CANADIAN WHMIS CLASSIFICATION and SYMBOLS: This product is categorized as a Controlled Product, Hazard Class D2B as per the Controlled Product Regulations

EUROPEAN ECONOMIC COMMUNITY INFORMATION:

EU LABELING AND CLASSIFICATION:

Classification of the mixture according to Regulation (EC) No1272/2008. See section 2 for details.

AUSTRALIAN INFORMATION FOR PRODUCT:

AUSTRALIAN INVENTORY OF CHEMICAL SUBSTANCES (AICS) STATUS: All components of this product are listed on the AICS.

STANDARD FOR THE UNIFORM SCHEDULING OF DRUGS AND POISONS: Not applicable.

JAPANESE INFORMATION FOR PRODUCT:

JAPANESE MINISTER OF INTERNATIONAL TRADE AND INDUSTRY (MITI) STATUS: The components of this product are not listed as Class I Specified Chemical Substances, Class II Specified Chemical Substances, or Designated Chemical Substances by the Japanese MITI.

INTERNATIONAL CHEMICAL INVENTORIES:

Listing of the components on individual country Chemical Inventories is as follows:

Asia-Pac:	Listed
Australian Inventory of Chemical Substances (AICS):	Listed
Korean Existing Chemicals List (ECL):	Listed
Japanese Existing National Inventory of Chemical Substances (ENCS):	Listed
Philippines Inventory if Chemicals and Chemical Substances (PICCS):	Listed
Swiss Giftliste List of Toxic Substances:	Listed
U.S. TSCA:	Listed

SECTION 16 - OTHER INFORMATION

PREPARED BY: Paul Eigbrett Global Safety Management, 10006 Cross Creek Blvd. Suite 440, Tampa, FL 33647

ANNEX:

IDENTIFIED USES OF ALCONOX® AND DIRECTIONS FOR USE

Used to clean: Healthcare instruments, laboratory ware, vacuum equipment, tissue culture ware, personal protective equipment, sampling apparatus, catheters, tubing, pipes, radioactive contaminated articles, optical parts, electronic components, pharmaceutical apparatus, cosmetics manufacturing equipment, metal castings, forgings and stampings, industrial parts, tanks and reactors. Authorized by USDA for use in federally inspected meat and poultry plants. Passes inhibitory residue test for water analysis. FDA certified.

Used to remove: Soil, grit, grime, buffing compound, slime, grease, oils, blood, tissue, salts, deposits, particulates, solvents, chemicals, radioisotopes, radioactive contaminations, silicon oils, mold release agents.

Surfaces cleaned: Corrosion inhibited formulation recommended for glass, metal, stainless steel, porcelain, ceramic, plastic, rubber and fiberglass. Can be used on soft metals such as copper, aluminum, zinc and magnesium if rinsed promptly. Corrosion testing may be advisable.

Cleaning method: Soak, brush, sponge, cloth, ultrasonic, flow through clean-inplace. Will foam—not for spray or machine use.

Directions: Make a fresh 1% solution (2 1/2 Tbsp. per gal., 1 1/4 oz. per gal. or 10 grams per liter) in cold, warm, or hot water. If available use warm water. Use cold water for blood stains. For difficult soils, raise water temperature and use more detergent. Clean by soak, circulate, wipe, or ultrasonic method. Not for spray machines, will foam. For nonabrasive scouring, make paste. Use 2% solution to soak frozen stopcocks. To remove silver tarnish, soak in 1% solution in aluminum container. RINSE THOROUGHLY—preferably with running water. For critical cleaning, do final or all rinsing in distilled, deionized, or purified water. For food contact surfaces, rinse with potable water. Used on a wide range of glass, ceramic, plastic, and metal surfaces. Corrosion testing may be advisable.

Health	2
Fire	0
Reactivity	0
Personal Protection	E

Material Safety Data Sheet
Alumina MSDS

Section 1: Chemical Product and Company Identification

Product Name: Alumina

Catalog Codes: SLA1906

CAS#: 1344-28-1

RTECS: BD1200000

TSCA: TSCA 8(b) inventory: Aluminum oxide

CI#: Not applicable.

Synonym: Alumina, Activated, 80-200 Mesh

Chemical Name: Aluminium Oxide

Chemical Formula: Al2O3

Contact Information:

Sciencelab.com, Inc.
14025 Smith Rd.
Houston, Texas 77396

US Sales: **1-800-901-7247**
International Sales: **1-281-441-4400**

Order Online: ScienceLab.com

CHEMTREC (24HR Emergency Telephone), call: 1-800-424-9300

International CHEMTREC, call: 1-703-527-3887

For non-emergency assistance, call: 1-281-441-4400

Section 2: Composition and Information on Ingredients

Composition:

Name	CAS #	% by Weight
Aluminum oxide	1344-28-1	100

Toxicological Data on Ingredients: Aluminum oxide LD50: Not available. LC50: Not available.

Section 3: Hazards Identification

Potential Acute Health Effects: Hazardous in case of skin contact (irritant), of eye contact (irritant), of ingestion, of inhalation.

Potential Chronic Health Effects:
CARCINOGENIC EFFECTS: A4 (Not classifiable for human or animal.) by ACGIH. MUTAGENIC EFFECTS: Not available. TERATOGENIC EFFECTS: Classified None. for human. DEVELOPMENTAL TOXICITY: Not available. Repeated or prolonged exposure is not known to aggravate medical condition.

Section 4: First Aid Measures

Eye Contact:
Check for and remove any contact lenses. In case of contact, immediately flush eyes with plenty of water for at least 15 minutes. Get medical attention.

Skin Contact:

In case of contact, immediately flush skin with plenty of water. Cover the irritated skin with an emollient. Remove contaminated clothing and shoes. Wash clothing before reuse. Thoroughly clean shoes before reuse. Get medical attention.

Serious Skin Contact:
Wash with a disinfectant soap and cover the contaminated skin with an anti-bacterial cream. Seek medical attention.

Inhalation:
If inhaled, remove to fresh air. If not breathing, give artificial respiration. If breathing is difficult, give oxygen. Get medical attention.

Serious Inhalation: Not available.

Ingestion:
Do NOT induce vomiting unless directed to do so by medical personnel. Never give anything by mouth to an unconscious person. If large quantities of this material are swallowed, call a physician immediately. Loosen tight clothing such as a collar, tie, belt or waistband.

Serious Ingestion: Not available.

Section 5: Fire and Explosion Data

Flammability of the Product: Non-flammable.

Auto-Ignition Temperature: Not applicable.

Flash Points: Not applicable.

Flammable Limits: Not applicable.

Products of Combustion: Not available.

Fire Hazards in Presence of Various Substances: Not applicable.

Explosion Hazards in Presence of Various Substances:
Risks of explosion of the product in presence of mechanical impact: Not available. Risks of explosion of the product in presence of static discharge: Not available.

Fire Fighting Media and Instructions: Not applicable.

Special Remarks on Fire Hazards: Chlorine Trifluoride reacts violently with Aluminum Oxide producing a flame.

Special Remarks on Explosion Hazards: Not available.

Section 6: Accidental Release Measures

Small Spill:
Use appropriate tools to put the spilled solid in a convenient waste disposal container. Finish cleaning by spreading water on the contaminated surface and dispose of according to local and regional authority requirements.

Large Spill:
Use a shovel to put the material into a convenient waste disposal container. Finish cleaning by spreading water on the contaminated surface and allow to evacuate through the sanitary system. Be careful that the product is not present at a concentration level above TLV. Check TLV on the MSDS and with local authorities.

Section 7: Handling and Storage

Precautions:
Do not breathe dust. Wear suitable protective clothing. In case of insufficient ventilation, wear suitable respiratory equipment. If you feel unwell, seek medical attention and show the label when possible. Avoid contact with skin and eyes. Keep away from incompatibles such as oxidizing agents, acids.

Storage: Keep container tightly closed. Keep container in a cool, well-ventilated area. Do not store above 24°C (75.2°F).

Section 8: Exposure Controls/Personal Protection

Engineering Controls:
Use process enclosures, local exhaust ventilation, or other engineering controls to keep airborne levels below recommended exposure limits. If user operations generate dust, fume or mist, use ventilation to keep exposure to airborne contaminants below the exposure limit.

Personal Protection:
Splash goggles. Lab coat. Dust respirator. Be sure to use an approved/certified respirator or equivalent. Gloves.

Personal Protection in Case of a Large Spill:
Splash goggles. Full suit. Dust respirator. Boots. Gloves. A self contained breathing apparatus should be used to avoid inhalation of the product. Suggested protective clothing might not be sufficient; consult a specialist BEFORE handling this product.

Exposure Limits:
TWA: 10 (mg/m3) from ACGIH (TLV) [United States] Inhalation Total. TWA: 10 (mg/m3) [Canada] Inhalation Total. TWA: 5 (mg/m3) from OSHA (PEL) [United States] Inhalation Respirable. TWA: 15 from OSHA (PEL) [United States] Inhalation Total. TWA: 10 [United Kingdom (UK)] Inhalation Total. TWA: 4 [United Kingdom (UK)] Inhalation Respirable.Consult local authorities for acceptable exposure limits.

Section 9: Physical and Chemical Properties

Physical state and appearance: Solid. (Solid crystalline powder.)

Odor: Odorless.

Taste: Not available.

Molecular Weight: 101.96 g/mole

Color: White.

pH (1% soln/water): Not applicable.

Boiling Point: 2980°C (5396°F)

Melting Point: 2072°C (3761.6°F)

Critical Temperature: Not available.

Specific Gravity: 4 (Water = 1)

Vapor Pressure: Not applicable.

Vapor Density: Not available.

Volatility: Not available.

Odor Threshold: Not available.

Water/Oil Dist. Coeff.: Not available.

Ionicity (in Water): Not available.

Dispersion Properties: Not available.

Solubility:
Very slightly soluble in cold water. Insoluble in hot water. Practically insoluble in non-polar organic solvents. Slowly soluble in aqueous alkalie solution-forming hydroxides. Very slightly soluble in acid, alkali.

Section 10: Stability and Reactivity Data

Stability: The product is stable.

Instability Temperature: Not available.

Conditions of Instability: Incompatible materials

Incompatibility with various substances: Reactive with oxidizing agents, acids.

Corrosivity: Non-corrosive in presence of glass.

Special Remarks on Reactivity:
Chlorine Trifluoride reacts violently with Aluminum Oxide producing a flame. Ethylene oxide may polymerize violently when in contact with highly catalytic surfaces such as pure Aluminum Oxide. Reacts with hot chlorinated rubber.

Special Remarks on Corrosivity: Not available.

Polymerization: Will not occur.

Section 11: Toxicological Information

Routes of Entry: Inhalation. Ingestion.

Toxicity to Animals:
LD50: Not available. LC50: Not available.

Chronic Effects on Humans:
CARCINOGENIC EFFECTS: A4 (Not classifiable for human or animal.) by ACGIH. TERATOGENIC EFFECTS: Classified None. for human.

Other Toxic Effects on Humans: Hazardous in case of skin contact (irritant), of ingestion, of inhalation.

Special Remarks on Toxicity to Animals: Not available.

Special Remarks on Chronic Effects on Humans: May cause cancer (tumorigenic) according to animal data. No human data found.

Special Remarks on other Toxic Effects on Humans:
Acute Potential Health Effects: Skin: May cause skin irritation. Eyes: Nuissance Dust. Dust may cause mechanical eye irritation. Inhalation: Nuissance Dust. Material is irritating to mucous membranes and upper respiratory tract. May cause lung injury. Ingestion: May be harmful if swallowed. Ingestion of large amounts mat cause gastrointestinal tract irritation. It is expected to be a low hazard for normal industrial handling.

Section 12: Ecological Information

Ecotoxicity: Not available.

BOD5 and COD: Not available.

Products of Biodegradation:
Possibly hazardous short term degradation products are not likely. However, long term degradation products may arise.

Toxicity of the Products of Biodegradation: The product itself and its products of degradation are not toxic.

Special Remarks on the Products of Biodegradation: Not available.

Section 13: Disposal Considerations

Waste Disposal:
Waste must be disposed of in accordance with federal, state and local environmental control regulations.

Section 14: Transport Information

DOT Classification: Not a DOT controlled material (United States).

Identification: Not applicable.

Special Provisions for Transport: Not applicable.

Section 15: Other Regulatory Information

Federal and State Regulations:
Illinois toxic substances disclosure to employee act: Aluminum oxide Rhode Island RTK hazardous substances: Aluminum oxide Minnesota: Aluminum oxide Massachusetts RTK: Aluminum oxide New Jersey: Aluminum oxide New Jersey spill list: Aluminum oxide California Director's list of Hazardous Substances: Aluminum oxide TSCA 8(b) inventory: Aluminum oxide SARA 313 toxic chemical notification and release reporting: Aluminum oxide

Other Regulations: EINECS: This product is on the European Inventory of Existing Commercial Chemical Substances.

Other Classifications:

WHMIS (Canada): Not controlled under WHMIS (Canada).

DSCL (EEC):
R36/38- Irritating to eyes and skin. S2- Keep out of the reach of children. S46- If swallowed, seek medical advice immediately and show this container or label.

HMIS (U.S.A.):

Health Hazard: 2

Fire Hazard: 0

Reactivity: 0

Personal Protection: E

National Fire Protection Association (U.S.A.):

Health: 2

Flammability: 0

Reactivity: 0

Specific hazard:

Protective Equipment:
Gloves. Lab coat. Dust respirator. Be sure to use an approved/certified respirator or equivalent. Splash goggles.

Section 16: Other Information

References:
-Material safety data sheet emitted by: la Commission de la Santé et de la Sécurité du Travail du Québec. -The Sigma-Aldrich Library of Chemical Safety Data, Edition II. -Hawley, G.G.. The Condensed Chemical Dictionary, 11e ed., New York N.Y., Van Nostrand Reinold, 1987.

Other Special Considerations: Not available.

Created: 10/10/2005 12:47 AM

Last Updated: 05/21/2013 12:00 PM

The information above is believed to be accurate and represents the best information currently available to us. However, we make no warranty of merchantability or any other warranty, express or implied, with respect to such information, and we assume no liability resulting from its use. Users should make their own investigations to determine the suitability of the information for

ALCONOX MSDS

Section 1 : MANUFACTURER INFORMATION

Product name: Alconox

Supplier: Same as manufacturer.

Manufacturer: Alconox, Inc.
30 Glenn St.
Suite 309
White Plains, NY 10603.

Manufacturer emergency phone number: 800-255-3924.
813-248-0585 (outside of the United States).

Manufacturer: Alconox, Inc.
30 Glenn St.
Suite 309
White Plains, NY 10603.

Supplier MSDS date: 2005/03/09

D.O.T. Classification: Not regulated.

Section 2 : HAZARDOUS INGREDIENTS

C.A.S.	CONCENTRATION %	Ingredient Name	T.L.V.	LD/50	LC/50
25155-30-0	10-30	SODIUM DODECYLBENZENESULFONATE	NOT AVAILABLE	438 MG/KG RAT ORAL 1330 MG/KG MOUSE ORAL	NOT AVAILABLE
497-19-8	7-13	SODIUM CARBONATE	NOT AVAILABLE	4090 MG/KG RAT ORAL 6600 MG/KG MOUSE ORAL	2300 MG/M3/2H RAT INHALATION 1200 MG/M3/2H MOUSE INHALATION
7722-88-5	10-30	TETRASODIUM PYROPHOSPHATE	5 MG/M3	4000 MG/KG RAT ORAL 2980 MG/KG MOUSE ORAL	NOT AVAILABLE
7758-29-4	10-30	SODIUM PHOSPHATE	NOT AVAILABLE	3120 MG/KG RAT ORAL 3100 MG/KG MOUSE ORAL >4640 MG/KG RABBIT DERMAL	NOT AVAILABLE

Section 2A : ADDITIONAL INGREDIENT INFORMATION

Note: (supplier).
CAS# 497-19-8: LD50 4020 mg/kg - rat oral.
CAS# 7758-29-4: LD50 3100 mg/kg - rat oral.

Section 3 : PHYSICAL / CHEMICAL CHARACTERISTICS

Physical state: Solid

Appearance & odor: Almost odourless.
White granular powder.

Odor threshold (ppm): Not available.

Vapour pressure (mmHg): Not applicable.

Vapour density (air=1): Not applicable.

By weight: Not available.

Evaporation rate (butyl acetate = 1): Not applicable.

Boiling point (°C): Not applicable.

Freezing point (°C): Not applicable.

pH: (1% aqueous solution).
9.5

Specific gravity @ 20 °C: (water = 1).
0.85 - 1.10

Solubility in water (%): 100 - > 10% w/w

Coefficient of water\oil dist.: Not available.

VOC: None

Section 4 : FIRE AND EXPLOSION HAZARD DATA

Flammability: Not flammable.

Conditions of flammability: Surrounding fire.

Extinguishing media: Carbon dioxide, dry chemical, foam.
Water
Water fog.

Special procedures: Self-contained breathing apparatus required.
Firefighters should wear the usual protective gear.

Auto-ignition temperature: Not available.

Flash point (°C), method: None

Lower flammability limit (% vol): Not applicable.

Upper flammability limit (% vol): Not applicable.

Not available.

Sensitivity to mechanical impact: Not applicable.

Hazardous combustion products: Oxides of carbon (COx).
Hydrocarbons.

Rate of burning: Not available.

Explosive power: None

Section 5 : REACTIVITY DATA

Chemical stability: Stable under normal conditions.

Conditions of instability: None known.

Hazardous polymerization: Will not occur.

Incompatible substances: Strong acids.
Strong oxidizers.

Hazardous decomposition products: See hazardous combustion products.

Section 6 : HEALTH HAZARD DATA

Route of entry: Skin contact, eye contact, inhalation and ingestion.

Effects of Acute Exposure

Eye contact: May cause irritation.

Skin contact: Prolonged contact may cause irritation.

Inhalation: Airborne particles may cause irritation.

Ingestion: May cause vomiting and diarrhea.
May cause abdominal pain.
May cause gastric distress.

Effects of chronic exposure: Contains an ingredient which may be corrosive.

LD50 of product, species & route: > 5000 mg/kg rat oral.

LC50 of product, species & route: Not available for mixture, see the ingredients section.

Exposure limit of material: Not available for mixture, see the ingredients section.

Sensitization to product: Not available.

Carcinogenic effects: Not listed as a carcinogen.

Reproductive effects: Not available.

Teratogenicity: Not available.

Mutagenicity: Not available.

Synergistic materials: Not available.

Medical conditions aggravated by exposure: Not available.

First Aid

Skin contact: Remove contaminated clothing.
Wash thoroughly with soap and water.
Seek medical attention if irritation persists.

Eye contact: Check for and remove contact lenses.
Flush eyes with clear, running water for 15 minutes while holding eyelids open: if irritation persists, consult a physician.

Inhalation: Remove victim to fresh air.
Seek medical attention if symptoms persist.

Ingestion: Dilute with two glasses of water.
Never give anything by mouth to an unconscious person.
Do not induce vomiting, seek immediate medical attention.

Section 7 : PRECAUTIONS FOR SAFE HANDLING AND USE

Leak / Spill: Contain the spill.
Recover uncontaminated material for re-use.
Wear appropriate protective equipment.
Contaminated material should be swept or shoveled into appropriate waste container for disposal.

Waste disposal: In accordance with municipal, provincial and federal regulations.

Handling procedures and equipment: Protect against physical damage.
Avoid breathing dust.
Wash thoroughly after handling.
Keep out of reach of children.
Avoid contact with skin, eyes and clothing.
Launder contaminated clothing prior to reuse.

Storage requirements: Keep containers closed when not in use.
Store away from strong acids or oxidizers.
Store in a cool, dry and well ventilated area.

Section 8 : CONTROL MEASURES

Precautionary Measures

Gloves / Type:

Neoprene or rubber gloves.

Respiratory / Type:

If exposure limit is exceeded, wear a NIOSH approved respirator.

Eye / Type:

Safety glasses with side-shields.

Footwear / Type: Safety shoes per local regulations.

Clothing / Type: As required to prevent skin contact.

Other / Type: Eye wash facility should be in close proximity.
Emergency shower should be in close proximity.

Ventilation requirements: Local exhaust at points of emission.

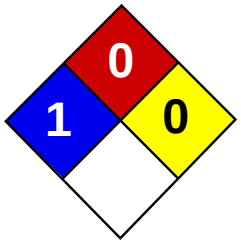

Health	2
Fire	0
Reactivity	0
Personal Protection	H

Material Safety Data Sheet

Arsenite Standard, 0.100 N Solution MSDS

Section 1: Chemical Product and Company Identification

Product Name: Arsenite Standard, 0.100 N Solution

Catalog Codes: SLA3832

CAS#: Mixture.

RTECS: Not applicable.

TSCA: TSCA 8(b) inventory: Water; Arsenic trioxide; Sodium hydroxide

CI#: Not applicable.

Synonym: Arsenite Standard, 0.100 N Solution

Chemical Name: Not applicable.

Chemical Formula: Not applicable.

Contact Information:

Sciencelab.com, Inc.
14025 Smith Rd.
Houston, Texas 77396

US Sales: **1-800-901-7247**
International Sales: **1-281-441-4400**

Order Online: ScienceLab.com

CHEMTREC (24HR Emergency Telephone), call: 1-800-424-9300

International CHEMTREC, call: 1-703-527-3887

For non-emergency assistance, call: 1-281-441-4400

Section 2: Composition and Information on Ingredients

Composition:

Name	CAS #	% by Weight
Water	7732-18-5	<100
Arsenic trioxide	1327-53-3	<0.5
Sodium hydroxide	1310-73-2	<0.3

Toxicological Data on Ingredients: Arsenic trioxide: ORAL (LD50): Acute: 14.6 mg/kg [Rat.]. 31.5 mg/kg [Mouse].

Section 3: Hazards Identification

Potential Acute Health Effects: Hazardous in case of skin contact (irritant), of eye contact (irritant), of ingestion.

Potential Chronic Health Effects:
CARCINOGENIC EFFECTS: Classified A1 (Confirmed for human.) by ACGIH, 1 (Proven for human.) by IARC [Arsenic trioxide]. MUTAGENIC EFFECTS: Mutagenic for mammalian somatic cells. [Arsenic trioxide]. Mutagenic for mammalian somatic cells. [Sodium hydroxide]. TERATOGENIC EFFECTS: Classified POSSIBLE for human [Arsenic trioxide]. DEVELOPMENTAL TOXICITY: Not available. The substance may be toxic to blood, kidneys, liver, cardiovascular system, central nervous system (CNS). Repeated or prolonged exposure to the substance can produce target organs damage.

Section 4: First Aid Measures

Eye Contact:
Check for and remove any contact lenses. In case of contact, immediately flush eyes with plenty of water for at least 15 minutes. Cold water may be used. Get medical attention.

Skin Contact:
In case of contact, immediately flush skin with plenty of water. Cover the irritated skin with an emollient. Remove contaminated clothing and shoes. Cold water may be used.Wash clothing before reuse. Thoroughly clean shoes before reuse. Get medical attention.

Serious Skin Contact:
Wash with a disinfectant soap and cover the contaminated skin with an anti-bacterial cream. Seek immediate medical attention.

Inhalation:
If inhaled, remove to fresh air. If not breathing, give artificial respiration. If breathing is difficult, give oxygen. Get medical attention.

Serious Inhalation: Not available.

Ingestion:
Do NOT induce vomiting unless directed to do so by medical personnel. Never give anything by mouth to an unconscious person. If large quantities of this material are swallowed, call a physician immediately. Loosen tight clothing such as a collar, tie, belt or waistband.

Serious Ingestion: Not available.

Section 5: Fire and Explosion Data

Flammability of the Product: Non-flammable.

Auto-Ignition Temperature: Not applicable.

Flash Points: Not applicable.

Flammable Limits: Not applicable.

Products of Combustion: Not available.

Fire Hazards in Presence of Various Substances: Not applicable.

Explosion Hazards in Presence of Various Substances: Non-explosive in presence of open flames and sparks, of shocks.

Fire Fighting Media and Instructions: Not applicable.

Special Remarks on Fire Hazards: Not available.

Special Remarks on Explosion Hazards:
Arsenic trioxide + zinc will explode on heating. (Arsenic trioxide)

Section 6: Accidental Release Measures

Small Spill:
Dilute with water and mop up, or absorb with an inert dry material and place in an appropriate waste disposal container. Finish cleaning by spreading water on the contaminated surface and dispose of according to local and regional authority requirements.

Large Spill:
Absorb with an inert material and put the spilled material in an appropriate waste disposal. Finish cleaning by spreading water on the contaminated surface and allow to evacuate through the sanitary system. Be careful that the product is not present at a concentration level above TLV. Check TLV on the MSDS and with local authorities.

Section 7: Handling and Storage

Precautions:
Keep locked up.. Keep container dry. Do not ingest. Do not breathe gas/fumes/ vapor/spray. Never add water to this product. In case of insufficient ventilation, wear suitable respiratory equipment. If ingested, seek medical advice immediately and show the container or the label. Avoid contact with skin and eyes.

Storage: Keep container tightly closed. Keep container in a cool, well-ventilated area. Do not store above 24°C (75.2°F).

Section 8: Exposure Controls/Personal Protection

Engineering Controls:
Provide exhaust ventilation or other engineering controls to keep the airborne concentrations of vapors below their respective threshold limit value.

Personal Protection:
Splash goggles. Lab coat. Vapor respirator. Be sure to use an approved/certified respirator or equivalent. Gloves.

Personal Protection in Case of a Large Spill:
Splash goggles. Full suit. Vapor respirator. Boots. Gloves. A self contained breathing apparatus should be used to avoid inhalation of the product. Suggested protective clothing might not be sufficient; consult a specialist BEFORE handling this product.

Exposure Limits:
Arsenic trioxide TWA: 0.05 (mg(As)/m) [Canada] Sodium hydroxide STEL: 2 (mg/m3) from ACGIH (TLV) [United States] TWA: 2 CEIL: 2 (mg/m3) from OSHA (PEL) [United States] CEIL: 2 (mg/m3) from NIOSHConsult local authorities for acceptable exposure limits.

Section 9: Physical and Chemical Properties

Physical state and appearance: Liquid.

Odor: Not available.

Taste: Not available.

Molecular Weight: Not applicable.

Color: Clear Colorless.

pH (1% soln/water): Neutral.

Boiling Point: The lowest known value is 100°C (212°F) (Water).

Melting Point: Not available.

Critical Temperature: Not available.

Specific Gravity: The only known value is 1 (Water = 1) (Water).

Vapor Pressure: The highest known value is 2.3 kPa (@ 20°C) (Water).

Vapor Density: The highest known value is 0.62 (Air = 1) (Water).

Volatility: Not available.

Odor Threshold: Not available.

Water/Oil Dist. Coeff.: Not available.

Ionicity (in Water): Not available.

Dispersion Properties: See solubility in water.

Solubility:
Easily soluble in cold water, hot water. Very slightly soluble in diethyl ether.

Section 10: Stability and Reactivity Data

Stability: The product is stable.

Instability Temperature: Not available.

Conditions of Instability: Incompatible materials

Incompatibility with various substances: Slightly reactive to reactive with oxidizing agents, metals, acids, alkalis.

Corrosivity: Non-corrosive in presence of glass.

Special Remarks on Reactivity:
Dangerous when heated to decomposition. It emits toxic fumes of Arsenic. Dissolves in alkali to form arsenites. Incompatible with tannic acid, infusion of Chincona & other vegetable astringent infusions & decoctions, iron (in solution). Forms toxic volatile halides in contact in contact with halide acids. Forms volatile, highly toxic Arsine when reduced in acid solution. A vigorous reaction occurs between Oxygen Difluoride, Aluminum Chloride and Arsenic Trioxide. Chlorine Trifluoride + Arsenic Trioxide produces a violent reaction without flame. Can generate Arsine, which is an extremely poisonous gas, when arsenic compounds contact acid, alkalies, or water in the presence of an active metal (zinc, aluminum, manganese, sodium, iron, etc.) (Arsenic trioxide)

Special Remarks on Corrosivity: Not available.

Polymerization: Will not occur.

Section 11: Toxicological Information

Routes of Entry: Absorbed through skin. Eye contact. Ingestion.

Toxicity to Animals:
LD50: Not available. LC50: Not available.

Chronic Effects on Humans:
CARCINOGENIC EFFECTS: Classified A1 (Confirmed for human.) by ACGIH, 1 (Proven for human.) by IARC [Arsenic trioxide]. MUTAGENIC EFFECTS: Mutagenic for mammalian somatic cells. [Arsenic trioxide]. Mutagenic for mammalian somatic cells. [Sodium hydroxide]. TERATOGENIC EFFECTS: Classified POSSIBLE for human [Arsenic trioxide]. Contains material which may cause damage to the following organs: blood, kidneys, liver, cardiovascular system, central nervous system (CNS).

Other Toxic Effects on Humans:
Hazardous in case of skin contact (irritant), of ingestion, of inhalation. Slightly hazardous in case of skin contact (permeator).

Special Remarks on Toxicity to Animals: Not available.

Special Remarks on Chronic Effects on Humans:
Passes through the placental barrier in human. May affect genetic material. May cause adverse reproductive (paternal and maternal effects as well as fetotoxicity or post implantation mortality) and birth defects (teratogen). May cause cancer (tumorigenic) (Arsenic trioxide)

Special Remarks on other Toxic Effects on Humans:
Acute Potential Health Effects: Skin: May cause skin irritation. Eyes: May cause eye irritation. May also affect vision. Inhalation: May cause respiratory tract irritation with sore throat, coughing, shortness of breath, and delayed lung edema. Ingestion: May be fatal if swallowed. Causes severe digestive tract irritation. Symptoms may include garlic-like odor of breath, garlic taste, possible bloody diarrhea, Mee's Lines (transverse white lines on nails), abdominal pain, nausea, vomiting. May also affect the liver, blood (anemia, hemolysis, pancytopenia), urinary tract (Kidneys), cardiovascular system (lowering of blood pressure and changes in EKG), behavior/Central Nervous System, metabolsim, and brain. Chronic Potential Health Effects:

Section 12: Ecological Information

Ecotoxicity: Not available.

BOD5 and COD: Not available.

Products of Biodegradation:
Possibly hazardous short term degradation products are not likely. However, long term degradation products may arise.

Toxicity of the Products of Biodegradation: The products of degradation are less toxic than the product itself.

Special Remarks on the Products of Biodegradation: Not available.

Section 13: Disposal Considerations

Waste Disposal:
Waste must be disposed of in accordance with federal, state and local environmental control regulations.

Section 14: Transport Information

DOT Classification: Not a DOT controlled material (United States).

Identification: Not applicable.

Special Provisions for Transport: Not applicable.

Section 15: Other Regulatory Information

Federal and State Regulations:
California prop. 65: This product contains the following ingredients for which the State of California has found to cause cancer, birth defects or other reproductive harm, which would require a warning under the statute: Arsenic trioxide California prop. 65: This product contains the following ingredients for which the State of California has found to cause birth defects which would require a warning under the statute: Arsenic trioxide California prop. 65: This product contains the following ingredients for which the State of California has found to cause cancer which would require a warning under the statute: Arsenic trioxide Connecticut hazardous material survey.: Arsenic trioxide Illinois toxic substances disclosure to employee act: Sodium hydroxide Illinois chemical safety act: Arsenic trioxide; Sodium hydroxide New York release reporting list: Arsenic trioxide; Sodium hydroxide Rhode Island RTK hazardous substances: Arsenic trioxide; Sodium hydroxide Pennsylvania RTK: Arsenic trioxide; Sodium hydroxide Minnesota: Sodium hydroxide Massachusetts RTK: Arsenic trioxide; Sodium hydroxide Massachusetts spill list: Arsenic trioxide New Jersey: Arsenic trioxide; Sodium hydroxide New Jersey spill list: Arsenic trioxide Louisiana RTK reporting list: Arsenic trioxide Louisiana spill reporting: Arsenic trioxide; Sodium hydroxide TSCA 8(b) inventory: Water; Arsenic trioxide; Sodium hydroxide SARA 302/304/311/312 extremely hazardous substances: Arsenic trioxide

Other Regulations: OSHA: Hazardous by definition of Hazard Communication Standard (29 CFR 1910.1200).

Other Classifications:

WHMIS (Canada): Not controlled under WHMIS (Canada).

DSCL (EEC):
R22- Harmful if swallowed. R45- May cause cancer. S2- Keep out of the reach of children. S46- If swallowed, seek medical advice immediately and show this container or label. S53- Avoid exposure - obtain special instructions before use.

HMIS (U.S.A.):

Health Hazard: 2

Fire Hazard: 0

Reactivity: 0

Personal Protection: h

National Fire Protection Association (U.S.A.):

Health: 1

Flammability: 0

Reactivity: 0

Specific hazard:

Protective Equipment:
Gloves. Lab coat. Vapor respirator. Be sure to use an approved/certified respirator or equivalent. Splash goggles.

Section 16: Other Information

References: Not available.

Other Special Considerations: Not available.

Created: 10/10/2005 12:50 AM

Last Updated: 05/21/2013 12:00 PM

SAFETY DATA SHEET

1. CHEMICAL PRODUCT AND COMPANY IDENTIFICATION

Product Identification

Product Name: Bon Ami® Powder Cleanser

Product Number: 04403, 04409, 04411, 04410, 04413, 04418 04412, 04421, 04424, 04414, 04415,

Synonyms: Bon Ami® Powder Cleanser, Bon Ami® Kitchen & Bath Cleanser, Bon Ami Polishing Cleanser

Product Use: Hard Surface Cleaner

Company Identification

Faultless Starch / Bon Ami Co.
1025 W 8th Street
Kansas City, MO 64101 USA
1-816-842-1230 (For product information)
1-800-424-9300 or 1-703-527-3887 (For emergencies)

2. HAZARDS IDENTIFICATION

Eye damage/irritation-category 1

Specific target organ toxicity-category 3

Warning

NFPA Rating:
Health - 1, Flammability - 0, Reactivity - 0

POTENTIAL HEALTH EFFECTS

INHALATION RISKS AND SYMPTOMS OF EXPOSURE:
Not toxic according to Federal Hazardous Substance and Labeling Definition Act. Repeated or prolonged inhalation of respirable dust in excess of the PEL may cause chronic respiratory disorders.

SKIN / EYE CONTACT RISKS AND SYMPTOMS OF EXPOSURE:
Not a skin irritant. Contains Calcium Carbonate which is a mild eye irritant.

SKIN ABSORPTION RISKS AND SYMPTOMS OF EXPOSURE:
None known.

INGESTION RISKS AND SYMPTOMS OF EXPOSURE:
Not toxic according to Federal Hazardous Substance and Labeling Act.

HEALTH HAZARDS (ACUTE AND CHRONIC):
Repeated prolonged inhalation of respirable dust in excess of the PEL may cause chronic respiratory disorders.

CARCINOGENICITY INFORMATION:
Not listed by IARC or NTP as a carcinogen.

MEDICAL CONDITIONS AGGRAVATED BY EXPOSURE:
None known.

3. COMPOSITION/INFORMATION ON INGREDIENTS

Chemical Name	CAS Number	Amount
CALCIUM CARBONATE	1317-65-3	Confidential
SODIUM CARBONATE	497-19-8	Confidential
FELDSPAR	68476-25-5	Confidential

(See Section 8 for exposure guidelines)

(See Section 15 for regulatory information)

4. FIRST AID MEASURES

EYE CONTACT FIRST AID:
Hold eyelids apart and flush eyes with plenty of water for at least 15 minutes. Get medical attention if irritation persists.

INHALATION FIRST AID:
If exposed to excessive levels of dust, remove to fresh air.

5. FIRE FIGHTING MEASURES

FLAMMABLE PROPERTIES
COC Flash Point: N/A
Autoignition Temperature: N/A

FLAMMABLE LIMITS IN AIR
LEL: N/A
UEL: N/A

FLAMMABLE PROPERTIES:
Active ingredient is not flammable, but packaging material will burn.

EXTINGUISHING MEDIA:
Water, carbon dioxide, foam or dry powder.

(section 5 continued)

SPECIAL FIRE FIGHTING PROCEDURES:
As in any fire, wear self-contained breathing apparatus pressure-demand MSHA/NIOSH (approved or equivalent) and full protective gear.

UNUSUAL FIRE AND EXPLOSION HAZARDS:
No known unusual hazards in a fire/explosion situation.

6. ACCIDENTAL RELEASE MEASURES

ACTIONS IF MATERIAL IS RELEASED OR SPILLED:
If uncontaminated, recover and reuse. Avoid causing dust in air. If contaminated, collect in suitable containers for disposal.

7. HANDLING AND STORAGE

PRECAUTIONS TO BE TAKEN IN HANDLING AND STORAGE:
Avoid breathing dust. Avoid contact with eyes. Store in a cool, dry area.

OTHER PRECAUTIONS:
Read and follow label CAUTIONS carefully.

8. EXPOSURE CONTROLS / PERSONAL PROTECTION

RESPIRATORY PROTECTION:
Use approved NIOSH/MSHA respirator if dust exceeds PEL.

VENTILATION:
Local exhaust to take dust away from user.

PROTECTIVE GLOVES:
Not required.

EYE PROTECTION:
Wear approved safety glasses.

OTHER PROTECTIVE CLOTHING OR EQUIPMENT:
None required.

WORK / HYGIENIC PRACTICES:
Observe reasonable care, cleanliness, and caution.

(section 8 continued)

EXPOSURE GUIDELINES:

CALCIUM CARBONATE

OSHA PEL: Total dust 15mg/m^3 / Respirable dust 5 mg/m^3
ACGIH TWA: Total dust 10 mg/m^3

SODIUM CARBONATE

OSHA PEL: 5 mg/m^3

FELDSPAR

OSHA TWA: (Respirable) 0.1 mg/m^3
ACGIH TWA: (Respirable) 0.1 mg/m^3

9. PHYSICAL AND CHEMICAL PROPERTIES

FORM .....: Powder
COLOR .....: White
ODOR .....: Pleasant to non-existent odor
SOLUBILITY IN WATER ...: 10%
BULK DENSITY .....: 0.9 g/ml
PH .....: ~10 for a 1% solution in water

10. STABILITY AND REACTIVITY

STABILITY:
Stable.

CONDITIONS TO AVOID:
Exposure to acids will generate carbon dioxide.

INCOMPATIBILITY (MATERIALS TO AVOID):
Strong mineral acids.

HAZARDOUS DECOMPOSITION OR BYPRODUCTS:
Reacts with acid to produce carbon dioxide or carbon monoxide.

HAZARDOUS POLYMERIZATION:
Will not occur.

11. TOXICOLOGICAL INFORMATION

No information available.

12. ECOLOGICAL INFORMATION

No information available.

13. DISPOSAL CONSIDERATIONS

WASTE DISPOSAL METHOD:
Not a hazardous substance under the solid waste disposal act. May be disposed of in an approved land disposal facility in accordance with federal, state and local regulations.

14. TRANSPORTATION INFORMATION

PRODUCT LABEL.....: Bon Ami® Powder Cleanser
D.O.T. HAZARD CLASS...: Not Regulated

15. REGULATORY INFORMATION

CHEMICAL INVENTORY INFORMATION:
This material or all of its components are listed on the Inventory of Existing Chemical Substances under the Toxic Substance Control Act (TSCA).

MISCELLANEOUS INFORMATION:
No toxic chemical(s) subject to the reporting requirements of section 313 Title III and of 40 CFR 372 are present.

16. OTHER INFORMATION

Reason For Issue...: GHS update
Approval Date.....: May 27, 2015
Supercedes Date....: October 9, 2013
RTN Number.....: 00004403 (Official Copy)

****
The information accumulated herein is believed to be accurate but is not warranted to be whether originating with the company or not. Recipients are advised to confirm in advance of need that the information is current, applicable and suitable to their circumstances.

****

END OF SDS

****

World Headquarters
Hach Company
P.O.Box 389
Loveland, CO USA 80539
(970) 669-3050

MSDS No: M01892

MATERIAL SAFETY DATA SHEET

1. CHEMICAL PRODUCT AND COMPANY IDENTIFICATION

Product Name: Arsenic Test Strips
Catalog Number: 2800150

Hach Company
P.O.Box 389
Loveland, CO USA 80539
(970) 669-3050

Emergency Telephone Numbers:
(Medical and Transportation)
(303) 623-5716 24 Hour Service
(515)232-2533 8am - 4pm CST

MSDS Number: M01892
Chemical Name: Not applicable
CAS No.: Not applicable
Chemical Formula: Not applicable
Chemical Family: Not applicable
Hazard: Highly toxic. Experimental carcinogen. Cumulative poison. Harmful if absorbed through skin. Harmful if swallowed
Date of MSDS Preparation:
Day: 25
Month: August
Year: 2007

2. COMPOSITION / INFORMATION ON INGREDIENTS

Mercuric Bromide Saturated Paper
CAS No.: Not applicable
TSCA CAS Number: Not applicable
Percent Range: 100.0
Percent Range Units: weight / weight
LD50: None reported
LC50: None reported
TLV: Not established
PEL: Not established
Hazard: Highly toxic. Experimental carcinogen. Cumulative poison. Harmful if absorbed through skin. Harmful if swallowed

3. HAZARDS IDENTIFICATION

Emergency Overview:
Appearance: White paper
Odor: None
HARMFUL IF SWALLOWED OR ABSORBED THROUGH SKIN
POSSIBLE BIRTH DEFECT HAZARD: MAY CAUSE BIRTH DEFECTS BASED ON ANIMAL DATA CAN CAUSE LUNG AND KIDNEY DISEASE

HMIS:

Health: 4
Flammability: 0
Reactivity: 0
Protective Equipment: X - See protective equipment, Section 8.

NFPA:
Health: 4
Flammability: 0
Reactivity: 0
Symbol: Not applicable

Potential Health Effects:
Eye Contact: May cause irritiation
Skin Contact: May cause irritiation
Skin Absorption: Will be absorbed through the skin. Effects similar to those of ingestion
Target Organs: Central nervous system Liver Kidneys
Ingestion: Highly toxic. Causes: abdominal pain nausea vomiting diarrhea metallic taste rapid pulse and respirations weakness May cause: inflammation of the mouth increased urinary output excessive salivation liver damage kidney damage central nervous system effects collapse death
Target Organs: Central nervous system Liver Kidneys
Inhalation: Toxic. May cause: Effects similar to those of ingestion.
Target Organs: Central nervous system Kidneys Liver
Medical Conditions Aggravated: Allergies or sensitivity to mercury. Central nervous system diseases Kidney conditions Liver conditions Pre-existing: Eye conditions Skin conditions Respiratory conditions
Chronic Effects: Mercury can cause personality changes such as: depression, despondency, fearfulness, restlessness, irritability, timidness, indecision and embarrassment. Mercury is a general protoplasmic poison; it circulates in the blood and is stored in the liver, kidneys, spleen and bones. Main symptoms are sore mouth, tremors and psychic disturbances.
Cancer / Reproductive Toxicity Information:
This product does NOT contain any OSHA listed carcinogens.

IARC Group 3: Non-classifiable
Mercury and Inorganic Mercury compounds
This product does NOT contain any NTP listed chemicals.

Additional Cancer / Reproductive Toxicity Information: an experimental teratogen. an experimental mutagen.

Toxicologically Synergistic Products: None reported

4. FIRST AID

Eye Contact: Flush eyes with water. Call physician if irritation develops.
Skin Contact (First Aid): Wash skin with plenty of water. Call physician if irritation develops.
Ingestion (First Aid): Give large quantities of water or milk. Induce vomiting using syrup of ipecac or by sticking finger down throat. Call physician immediately. Never give anything by mouth to an unconscious person.
Inhalation: None required.

5. FIRE FIGHTING MEASURES

Flammable Properties: Can burn in fire, releasing toxic vapors.
Flash Point: Not determined
Method: Not applicable
Flammability Limits:
Lower Explosion Limits: Not applicable
Upper Explosion Limits: Not applicable
Autoignition Temperature: Not determined

Hazardous Combustion Products: May vaporize to form Mercury vapor. bromides
Fire / Explosion Hazards: Reacts with sodium aci-nitromethanide and acid to form explosive mercury fulminate.
Static Discharge: None reported.
Mechanical Impact: None reported
Extinguishing Media: Use media appropriate to surrounding fire conditions
Fire Fighting Instruction: As in any fire, wear self-contained breathing apparatus pressure-demand and full protective gear. Water runoff can cause environmental damage. Dike and collect water used to fight fire.

6. ACCIDENTAL RELEASE MEASURES

Spill Response Notice:
Only persons properly qualified to respond to an emergency involving hazardous substances may respond to a spill according to federal regulations (OSHA 29 CFR 1910.120(a)(v)) and per your company's emergency response plan and guidelines/procedures. See Section 13, Special Instructions for disposal assistance.
Containment Technique: Releases of this material may contaminate the environment. Stop spilled material from being released to the environment.
Clean-up Technique: Sweep up material. Dispose of all mercury contaminated material at an E.P.A. hazardous waste facility. Decontaminate the area of the spill with a soap solution.
Evacuation Procedure: Evacuate as needed to perform spill clean-up. If conditions warrant, increase the size of the evacuation.
Special Instructions (for accidental release): Product is regulated as a hazardous air pollutant. Product is regulated as RCRA hazardous waste.
304 EHS RQ (40 CFR 355): Mercuric Bromide - RQ 1 lb.
D.O.T. Emergency Response Guide Number: 154

7. HANDLING / STORAGE

Handling: Avoid contact with skin eyes clothing Do not breathe dust. Use with adequate ventilation. Wash thoroughly after handling. Maintain general industrial hygiene practices when using this product.
Storage: Keep container tightly closed when not in use.
Flammability Class: Not applicable

8. EXPOSURE CONTROLS / PROTECTIVE EQUIPMENT

Engineering Controls: Maintain adequate ventilation to keep vapor level below TWA for chemicals in this product. Maintain general industrial hygiene practices when using this product.
Personal Protective Equipment:
Eye Protection: safety glasses with top and side shields
Skin Protection: disposable latex gloves lab coat
Inhalation Protection: adequate ventilation
Precautionary Measures: Avoid contact with: eyes skin clothing Do not breathe: dust Use with adequate ventilation. Wash thoroughly after handling.
TLV: Not established
PEL: Not established

9. PHYSICAL / CHEMICAL PROPERTIES

Appearance: White paper
Physical State: Solid
Molecular Weight: Not applicable
Odor: None
pH: Not applicable
Vapor Pressure: Not applicable

Vapor Density (air = 1): Not applicable
Boiling Point: Not applicable
Melting Point: Not applicable
Specific Gravity (water = 1): Not applicable
Evaporation Rate (water = 1): Not applicable
Volatile Organic Compounds Content: Not applicable
Partition Coefficient (n-octanol / water): Not applicable
Solubility:
Water: Not applicable
Acid: Not applicable
Other: Not applicable
Metal Corrosivity:
Steel: Not applicable
Aluminum: Not applicable

10. STABILITY / REACTIVITY

Chemical Stability: Stable when stored under proper conditions.
Conditions to Avoid: Heating to decomposition.
Reactivity / Incompatibility: Incompatible with: formates sulfites phosphates arsenic boron compounds carbonates iron copper silver salts
Hazardous Decomposition: Heating to decomposition releases: mercury bromides
Hazardous Polymerization: Will not occur.

11. TOXICOLOGICAL INFORMATION

Product Toxicological Data:
LD50: None reported
LC50: None reported
Dermal Toxicity Data: None reported
Skin and Eye Irritation Data: None reported
Mutation Data: None reported
Reproductive Effects Data: None reported
Ingredient Toxicological Data: Mercuric Bromide: Oral rat LD50 = 40 mg/kg, Dermal rat LD50 = 100 mg/kg

12. ECOLOGICAL INFORMATION

Product Ecological Information: --
No ecological data available for this product.
Ingredient Ecological Information: Mercury and mercury compounds: Calculated Bioconcentration factor > 100. LC50/96H fish <1 mg/L

13. DISPOSAL CONSIDERATIONS

EPA Waste ID Number: D009
Special Instructions (Disposal): Dispose of all mercury contaminated material at an E.P.A. hazardous waste facility.
Empty Containers: Rinse three times with an appropriate solvent. Rinsate from empty containers is hazardous waste and should be disposed of at an E.P.A. approved facility. Dispose of empty container as normal trash.

NOTICE (Disposal): These disposal guidelines are based on federal regulations and may be superseded by more stringent state or local requirements. Please consult your local environmental regulators for more information.

14. TRANSPORT INFORMATION

D.O.T.:
D.O.T. Proper Shipping Name: Mercury Bromides Mixture
--
DOT Hazard Class: 6.1
DOT Subsidiary Risk: NA
DOT ID Number: UN1634
DOT Packing Group: II
I.C.A.O.:
I.C.A.O. Proper Shipping Name: Mercury Bromides Mixture
--
ICAO Hazard Class: 6.1
ICAO Subsidiary Risk: NA
ICAO ID Number: UN1634
ICAO Packing Group: II
I.M.O.:
I.M.O. Proper Shipping Name: Mercury Bromides Mixture
--
I.M.O. Hazard Class: 6.1
I.M.O. Subsidiary Risk: NA
I.M.O. ID Number: UN1634
I.M.O. Packing Group: II
Additional Information: There is a possibility that this product could be contained in a reagent set or kit composed of various compatible dangerous goods. If the item is NOT in a set or kit, the classification given above applies. If the item IS part of a set or kit, the classification would change to the following: UN3316 Chemical Kit, Class 9, PG II or III. If the item is not regulated, the Chemical Kit classification does not apply.

15. REGULATORY INFORMATION

U.S. Federal Regulations:
O.S.H.A.: This product meets the criteria for a hazardous substance as defined in the Hazard Communication Standard. (29 CFR 1910.1200)
E.P.A.:
S.A.R.A. Title III Section 311/312 Categorization (40 CFR 370): Immediate (Acute) Health Hazard Delayed (Chronic) Health Hazard
S.A.R.A. Title III Section 313 (40 CFR 372): This product contains a chemical(s) subject to the reporting requirements of Section 313 of Title III of SARA.
Mercury Compounds
302 (EHS) TPQ (40 CFR 355): 500 lbs. Mercury Bromide
304 CERCLA RQ (40 CFR 302.4): Not applicable
304 EHS RQ (40 CFR 355): Mercuric Bromide - RQ 1 lb.
Clean Water Act (40 CFR 116.4): Not applicable
RCRA: Contains RCRA regulated substances. See Section 13, EPA Waste ID Number.
C.P.S.C.: Not applicable
State Regulations:
California Prop. 65: WARNING - This product contains a chemical known to the State of California to cause birth defects or other reproductive harm.
Identification of Prop. 65 Ingredient(s): Mercury Compounds
California Perchlorate Rule CCR Title 22 Chap 33:
Trade Secret Registry: Not applicable

National Inventories:

U.S. Inventory Status: All ingredients in this product are listed on the TSCA 8(b) Inventory (40 CFR 710).

TSCA CAS Number: Not applicable

16. OTHER INFORMATION

Intended Use: Laboratory Reagent

References: Air Contaminants, Federal Register, Vol. 54, No. 12. Thursday, January 19, 1989. pp. 2332-2983. TLV's Threshold Limit Values and Biological Exposure Indices for 1992-1993. American Conference of Governmental Industrial Hygienists, 1992. Sax, N. Irving. Dangerous Properties of Industrial Materials, 7th Ed. New York: Van Nostrand Reinhold Co., 1989. Sax, N. Irving and Richard J. Lewis, Sr., revised by. Hawley's Condensed Chemical Dictionary, Eleventh Ed. New York: Van Nostrand Reinhold Co., 1987. The Merck Index, 11th Ed. Rahway, New Jersey: Merck and Co., Inc., 1989. Vendor Information. Gosselin, R. E. et al. Clinical Toxicology of Commercial Products, 5th Ed. Baltimore: The Williams and Wilkins Co., 1984. CCINFO RTECS. Canadian Centre for Occupational Health and Safety. Hamilton, Ontario Canada: 30 June 1993. Technical Judgment.

Revision Summary: Updates in Section(s) 14,

Legend:

NA - Not Applicable	w/w - weight/weight
ND - Not Determined	w/v - weight/volume
NV - Not Available	v/v - volume/volume

USER RESPONSIBILITY: Each user should read and understand this information and incorporate it in individual site safety programs in accordance with applicable hazard communication standards and regulations.

THE INFORMATION CONTAINED HEREIN IS BASED ON DATA CONSIDERED TO BE ACCURATE. HOWEVER, NO WARRANTY IS EXPRESSED OR IMPLIED REGARDING THE ACCURACY OF THESE DATA OR THE RESULTS TO BE OBTAINED FROM THE USE THEREOF.

Material Safety Data Sheet
acc. to ISO/DIS 11014

Printing date: 04/13/2010 Reviewed on: 04/13/2010

1 Identification of substance

· **Product details**

· **Trade name:** **LUBRICANT/COOLANT FOR BREDEL HOSEPUMP 'FOOD GRADE'**
NSF Registration No 123204, Category Code H1

· **Application of the substance / the preparation:** Coolant/ Cutting solution

· **Manufacturer/Supplier:**
Watson-Marlow Bredel B.V.
Sluisstraat 7, 7491 GA tel.: +31 74 3770000
P.O.Box 47, 7490 AA fax.: +31 74 3761175
DELDEN, the Netherlands

· **Information department:**
Tel.: +31 (0)74 3770000
E-mail: hosepumps@wmpg.com

· **Emergency information:** Tel.: +31 (0)74 3770000

2 Composition/Data on components

· **Chemical characterization**

· **Description:** Mixture of the substances listed below with nonhazardous additions.

· **Dangerous components:**

56-81-5 glycerol	50-100%
57-55-6 propane-1,2-diol	2.5-10%

3 Hazards identification

· **Hazard description:** not applicable

· **Information pertaining to particular dangers for man and environment**
The product does not have to be labelled due to the calculation procedure of the "General Classification guideline for preparations of the EU" in the latest valid version.

· **Classification system**
The classification was made according to the latest editions of international substances lists, and expanded upon from company and literature data.

· **NFPA-Ratings for USA**
Health = 0
Fire = 1
Reactivity = 0

4 First aid measures

· **General information** No special measures required.

· **After inhalation** Not applicable.

· **After skin contact** Wash with water.

· **After eye contact** Rinse opened eye for several minutes under running water.

· **After swallowing** If symptoms persist consult doctor.

5 Fire fighting measures

· **Suitable extinguishing agents** Water spray, CO2, extinguishing powder, foam.

· **Special hazards caused by the material, its products of combustion or resulting gases:**
Formation of toxic gases is possible during heating or in case of fire.

(Contd. on page 2)

Material Safety Data Sheet
acc. to ISO/DIS 11014

Printing date: 04/13/2010 Reviewed on: 04/13/2010

Trade name: LUBRICANT/COOLANT FOR BREDEL HOSEPUMP 'FOOD GRADE'
NSF Registration No 123204, Category Code H1

(Contd. of page 1)

· **Protective equipment:** Wear fully protective suit.

6 Accidental release measures

· **Person-related safety precautions:** Not required.
· **Measures for environmental protection:** Dilute with plenty of water.
· **Measures for cleaning/collecting:**
Absorb with liquid-binding material (sand, diatomite, acid binders, universal binders, sawdust).
Dispose of the collected material according to regulations.

7 Handling and storage

· **Handling**
· **Information for safe handling:** No special measures required.
· **Information about protection against explosions and fires:**
No special measures required.

· **Storage**
· **Requirements to be met by storerooms and receptacles:**
Suitable material for receptacles: stainless and carbon steel and plastics.
· **Information about storage in one common storage facility:** Not required.
· **Further information about storage conditions:**
This product is hygroscopic.
Protect from humidity and water.

8 Exposure controls and personal protection

· **Components with limit values that require monitoring at the workplace:**

56-81-5 glycerol
PEL 15*; 5** mg/m³
*Total dust **Respirable fraction

· **Additional information:**
The lists that were valid during the creation were used as basis.

· **Personal protective equipment**
· **General protective and hygienic measures**
The usual precautionary measures for handling chemicals should be followed.
· **Breathing equipment:** Not required.
· **Protection of hands:** Safety gloves recommended.
· **Material of gloves**
Neoprene
Nitrile rubber, NBR
Fluorocarbon rubber (Viton)
· **Penetration time of glove material**
The determined penetration times according to EN 374 part III are not performed under practical conditions. Therefore a maximum wearing time, which corresponds to 50% of the penetration time, is recommended.

(Contd. on page 3)

Material Safety Data Sheet
acc. to ISO/DIS 11014

Printing date: 04/13/2010 Reviewed on: 04/13/2010

Trade name: LUBRICANT/COOLANT FOR BREDEL HOSEPUMP 'FOOD GRADE'
NSF Registration No 123204, Category Code H1

(Contd. of page 2)

· **For the permanent contact of a maximum of 15 minutes gloves made of the following materials are suitable:**
Butyl rubber, BR
· **Eye protection:** Goggles recommended.

9 Physical and chemical properties

· **General Information**

Form:	Fluid
Color:	Clear Green
Odor:	Odorless

· **Change in condition**

Boiling point/Boiling range:	260°C (500°F)
Solidification point:	- 30°C

· **Flash point:**	> 100°C (> 212°F) (ASTM D6450)
· **Ignition temperature:**	~ 370°C (~ 698°F)
· **Danger of explosion:**	Product is not explosive. However, formation of explosive air/vapor mixtures are possible.
· **Explosion limits:**	
Lower:	2.6 Vol %
Upper:	11.3 Vol %
· **Vapor pressure at 20°C (68°F):**	1.3 hPa (1 mm Hg)
· **Density at 20°C (68°F):**	~ 1.245 g/cm³ (ISO 2811-2)
· **Solubility in / Miscibility with**	
Water:	Fully miscible
· **Alcohols:**	Fully miscible
· **pH-value:**	Neutral
· **Viscosity:**	
dynamic at 20°C (68°F):	600-700 mPas (ASTM D2196)

10 Stability and reactivity

· **Thermal decomposition / conditions to be avoided:**
No decomposition if used according to specifications.
· **Materials to be avoided:** oxidizing agents
· **Dangerous products of decomposition:** No dangerous decomposition products known

(Contd. on page 4)

Material Safety Data Sheet
acc. to ISO/DIS 11014

Printing date: 04/13/2010 Reviewed on: 04/13/2010

Trade name: LUBRICANT/COOLANT FOR BREDEL HOSEPUMP 'FOOD GRADE'
NSF Registration No 123204, Category Code H1

(Contd. of page 3)

11 Toxicological information

· **Acute toxicity:**

· **LD/LC50 values that are relevant for classification:**
· **LD50 Product:** oral: > 10000 mg/kg (rat, literature).

· **Primary irritant effect:**
· **on the skin:** No irritant effect.
· **on the eye:** No irritating effect.
· **Sensitization:** No sensitizing effects known.

· **Additional toxicological information:**
The product is not subject to classification according to internally approved calculation methods for preparations:
When used and handled according to specifications, the product does not have any harmful effects according to our experience and the information provided to us.

12 Ecological information

· **Information about elimination (persistence and degradability):**
Easily biodegradable
Biodegradability: > 85%.

· **Acquatic toxicity:**
· **fish toxicity:** LC50: > 5000 mg/l, literature.

· **Behavior in sewage processing plants:**
In case of judicious use the product does not cause disturbances in water purification plants, according to experiences made so far.

· **Additional ecological information:**

· **General notes:**
Water hazard class 1 (German Regulation) (Self-assessment): slightly hazardous for water.
Do not allow undiluted product or large quantities of it to reach ground water, water course or sewage system.
Classification according VwVwS dated May 1999. (German legislation)

13 Disposal considerations

· **Product:**
· **Recommendation**
Must not be disposed of together with household garbage. Do not allow product to reach sewage system.

· **Uncleaned packagings:**
· **Recommendation:**
With due observance of local regulations, for instance transport to refuse incinerator.
· **Recommended cleansing agent:** Water, if necessary with cleansing agents.

(Contd. on page 5)

Material Safety Data Sheet
acc. to ISO/DIS 11014

Printing date: 04/13/2010 Reviewed on: 04/13/2010

Trade name: LUBRICANT/COOLANT FOR BREDEL HOSEPUMP 'FOOD GRADE'
NSF Registration No 123204, Category Code H1

(Contd. of page 4)

14 Transport information

· **Transport/Additional information:**
Not dangerous according to the ADR/RID, IMDG, ICAO/IATA and DOT specifications.

15 Regulations

· **Cancerogenity categories**
· **EPA (Environmental Protection Agency)**
None of the ingredients is listed.
· **IARC (International Agency for Research on Cancer)**
None of the ingredients is listed.
· **NTP (National Toxicology Program)**
None of the ingredients is listed.
· **TLV (Threshold Limit Value established by ACGIH)**
None of the ingredients is listed.
· **MAK (German Maximum Workplace Concentration)**
None of the ingredients is listed.
· **NIOSH-Ca (National Institute for Occupational Safety and Health)**
None of the ingredients is listed.
· **OSHA-Ca (Occupational Safety & Health Administration)**
None of the ingredients is listed.

· **Product related hazard informations:**
Observe the general safety regulations when handling chemicals
The product is not subject to identification regulations according to directives on hazardous materials.

· **National regulations**

· **Water hazard class:**
Water hazard class 1 (Self-assessment): slightly hazardous for water.

16 Other information

Disclaimer of liability: the information in this MSDS was obtained from sources which we believe are reliable. However, the information is provided without any warranty, express or implied, regarding its correctness. The conditions or methods of handling, storage, use or disposal of the product are beyond our control and may be beyond our knowledge. For this and other reasons, we do not assume responsibility and expressly disclaim liability for loss, damage or expense arising out of or in any way connected with the handling, storage, use or disposal of the product. This MSDS was prepared and is to be used only for this product. If the product is used as a component in another product, this MSDS information may not be applicable.

CITGO A/W Hydraulic Oil 46

Material Safety Data Sheet

CITGO Petroleum Corporation
P.O. Box 4689
Houston, TX 77210

MSDS No. 633420001
Revision Date 11/4/2011

IMPORTANT: This MSDS is prepared in accordance with 29 CFR 1910.1200. Read this MSDS before transporting, handling, storing or disposing of this product and forward this information to employees, customers and users of this product.

Hazard Rankings

	HMIS	NFPA
Health Hazard	1	0
Fire Hazard	1	1
Reactivity	0	0

*** = Chronic Health Hazard**

Emergency Overview

Physical State Liquid.
Color Light amber **Odor** Mild petroleum odor

WARNING:
Oil injected into the skin from high-pressure leaks can cause severe injury.
Most damage occurs during the first few hours.
Seek medical attention immediately.
Surgical removal of oil may be necessary.
Spills may create a slipping hazard.

Protective Equipment

Minimum Recommended
See Section 8 for Details

SECTION 1. PRODUCT IDENTIFICATION

Trade Name	CITGO A/W Hydraulic Oil 46	**Technical Contact**	(800) 248-4684
Product Number	633420001	**Medical Emergency**	(832) 486-4700
CAS Number	Mixture.	**CHEMTREC Emergency (United States Only)**	(800) 424-9300
Product Family	Hydraulic oil		
Synonyms	Hydraulic oil; CITGO® Material Code: 633420001		

SECTION 2. COMPOSITION

Component Name(s)	CAS Registry No.	Concentration (%)
Highly-refined petroleum lubricant oils	Various	60 - 100
Zinc and zinc compounds	Proprietary	<1
Proprietary Ingredients	Proprietary Mixture	<1

SECTION 3. HAZARDS IDENTIFICATION

Also see Emergency Overview and Hazard Ratings on the top of Page 1 of this MSDS.

Major Route(s) of Entry Skin contact.

Signs and Symptoms of Acute Exposure

Inhalation At elevated temperatures or in enclosed spaces, product mist or vapors may irritate the mucous membranes of the nose, the throat, bronchi, and lungs.

Eye Contact This product can cause transient mild eye irritation with short-term contact with liquid sprays or mists. Symptoms include stinging, watering, redness, and swelling.

Skin Contact This material can cause mild skin irritation from prolonged or repeated skin contact. Injection under the skin can cause inflammation and swelling. Injection of pressurized hydrocarbons can cause severe, permanent tissue damage. Initial symptoms may be minor. Injection of petroleum hydrocarbons requires immediate medical attention.

Ingestion If swallowed, large volumes of material can cause generalized depression, headache, drowsiness, nausea, vomiting and diarrhea. Smaller doses can cause a laxative effect. If aspirated into the lungs, liquid can cause lung damage.

Chronic Health Effects Summary This product contains a petroleum-based mineral oil. Prolonged or repeated skin contact can cause mild irritation and inflammation characterized by drying, cracking, (dermatitis) or oil acne. Repeated or prolonged inhalation of petroleum-based mineral oil mists at concentrations above applicable workplace exposure levels can cause respiratory irritation or other pulmonary effects.

Conditions Aggravated by Exposure Disorders of the following organs or organ systems that may be aggravated by significant exposure to this material or its components include: Skin

Target Organs May cause damage to the following organs: skin.

Carcinogenic Potential This product is not known to contain any components at concentrations above 0.1% which are considered carcinogenic by OSHA, IARC or NTP.

OSHA Hazard Classification is indicated by an "X" in the box adjacent to the hazard title. If no "X" is present, the product does not exhibit the hazard as defined in the OSHA Hazard Communication Standard (29 CFR 1910.1200).

OSHA Health Hazard Classification				OSHA Physical Hazard Classification					
Irritant		Sensitizer		Combustible		Explosive		Pyrophoric	
Toxic		Highly Toxic		Flammable		Oxidizer		Water-reactive	
Corrosive		Carcinogenic		Compressed Gas		Organic Peroxide		Unstable	

SECTION 4. FIRST AID MEASURES

Take proper precautions to ensure your own health and safety before attempting rescue or providing first aid. For more specific information, refer to Exposure Controls and Personal Protection in Section 8 of this MSDS.

Inhalation Move victim to fresh air. If victim is not breathing, immediately begin rescue breathing. If breathing is difficult, 100 percent humidified oxygen should be administered by a qualified individual. Seek medical attention immediately. Keep the affected individual warm and at rest.

Eye Contact Check for and remove contact lenses. Flush eyes with cool, clean, low-pressure water while occasionally lifting and lowering eyelids. Seek medical attention if excessive tearing, redness, or pain persists.

Skin Contact If burned by hot material, cool skin by quenching with large amounts of cool water. For contact with product at ambient temperatures, remove contaminated shoes and clothing. Wipe off excess material. Wash exposed skin with mild soap and water. Seek medical attention if tissue appears damaged or if pain or irritation persists. Thoroughly clean contaminated clothing before reuse. Clean or discard contaminated leather goods. If material is injected under the skin, seek medical attention immediately.

Ingestion Do not induce vomiting unless directed to by a physician. Do not give anything to drink unless directed to by a physician. Never give anything by mouth to a person who is not fully conscious. Seek medical attention immediately.

Notes to Physician

SKIN: In the event of injection in underlying tissue, immediate treatment should include extensive incision, debridement and saline irrigation. Inadequate treatment can result in ischemia and gangrene. Early symptoms may be minimal.

INGESTION: The viscosity range of the product(s) represented by this MSDS is greater than 100 SUS at 100°F. Careful gastric lavage may be considered to evacuate large quantities of material.

SECTION 5. FIRE FIGHTING MEASURES

NFPA Flammability Classification NFPA Class-IIIB combustible material.

Flash Point Open cup: 220°C (428°F) (Cleveland.).

Lower Flammable Limit No data. **Upper Flammable Limit** No data.

Autoignition Temperature Not available.

Hazardous Combustion Products Carbon dioxide, carbon monoxide, smoke, fumes, unburned hydrocarbons and oxides of sulfur, phosphorus, zinc and/or nitrogen.

Special Properties This material can burn but will not readily ignite. This material will release vapors when heated above the flash point temperature that can ignite when exposed to a source of ignition. In enclosed spaces, heated vapor can ignite with explosive force. Mists or sprays may burn at temperatures below the flash point.

Extinguishing Media Use dry chemical, foam, carbon dioxide or water fog. Water or foam may cause frothing. Carbon dioxide and inert gas can displace oxygen. Use caution when applying carbon dioxide or inert gas in confined spaces.

Protection of Fire Fighters Firefighters must use full bunker gear including NIOSH-approved positive pressure self-contained breathing apparatus to protect against potential hazardous combustion or decomposition products and oxygen deficiencies.

SECTION 6. ACCIDENTAL RELEASE MEASURES

Take proper precautions to ensure your own health and safety before attempting spill control or clean-up. For more specific information, refer to the Emergency Overview on Page 1, Exposure Controls and Personal Protection in Section 8 and Disposal Considerations in Section 13 of this MSDS.

Do not touch damaged containers or spilled material unless wearing appropriate protective equipment. Slipping hazard; do not walk through spilled material. Stop leak if you can do so without risk. For small spills, absorb or cover with dry earth, sand, or other inert non-combustible absorbent material and place into waste containers for later disposal. Contain large spills to maximize product recovery or disposal. Prevent entry into waterways or sewers. In urban area, cleanup spill as soon as possible. In natural environments, seek cleanup advice from specialists to minimize physical habitat damage. This material will float on water. Absorbent pads and similar materials can be used. Comply with all laws and regulations.

SECTION 7. HANDLING AND STORAGE

Handling

Keep containers closed and do not handle or store near heat, sparks, or any other potential ignition sources. Avoid contact with oxidizing agents. Never siphon by mouth. Avoid contact with eyes, skin, and clothing. Avoid contamination and extreme temperatures.

Empty containers may contain product residues that can ignite with explosive force. Drain and purge equipment, as necessary, to remove material residues. Follow proper entry procedures, including compliance with 29 CFR 1910.146 prior to entering confined spaces such as tanks or pits. Use appropriate respiratory protection when concentrations exceed any

established occupational exposure level (See Section 8). Promptly remove contaminated clothing. Wash exposed skin thoroughly with soap and water after handling.

Do not pressurize, cut, weld, braze solder, drill, grind or expose containers to flames, sparks, heat or other potential ignition sources. Protect containers against physical damage. Consult appropriate federal, state and local authorities before reusing, reconditioning, reclaiming, recycling or disposing of empty containers and/or waste residues of this product.

Storage

Keep container tightly closed. Store in a cool, dry, well-ventilated area. Store only in approved containers. Do not store with strong oxidizing agents. Do not store at elevated temperatures. Avoid storing product in direct sunlight for extended periods of time. Storage area must meet OSHA requirements and applicable fire codes. Consult appropriate federal, state and local authorities before reusing, reconditioning, reclaiming, recycling or disposing of empty containers or waste residues of this product.

SECTION 8. EXPOSURE CONTROLS AND PERSONAL PROTECTION

Engineering Controls

Provide exhaust ventilation or other engineering controls to keep the airborne concentrations of mists and/or vapors below the recommended exposure limits (see below). An eye wash station and safety shower should be located near the work-station.

Personal Protective Equipment

Personal protective equipment should be selected based upon the conditions under which this material is used. A hazard assessment of the work area for PPE requirements should be conducted by a qualified professional pursuant to OSHA regulations. The following pictograms represent the minimum requirements for personal protective equipment. For certain operations, additional PPE may be required.

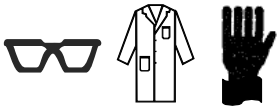

Eye Protection

Safety glasses equipped with side shields are recommended as minimum protection in industrial settings. Wear goggles if splashing or spraying is anticipated. Wear goggles and face shield if material is heated above 125°F (51°C). Have suitable eye wash water available.

Hand Protection

None required for incidental contact. Use gloves constructed of chemical resistant materials such as heavy nitrile rubber if frequent or prolonged contact is expected. Use heat-protective gloves when handling product at elevated temperatures.

Body Protection

Use clean protective clothing if splashing or spraying conditions are present. Protective clothing may include long-sleeve outer garment, apron, or lab coat. If significant contact occurs, remove oil-contaminated clothing as soon as possible and promptly shower. Launder contaminated clothing before reuse or discard. Wear heat protective boots and protective clothing when handling material at elevated temperatures.

Respiratory Protection

The need for respiratory protection is not anticipated under normal use conditions and with adequate ventilation. If elevated airborne concentrations above applicable workplace exposure levels are anticipated, a NIOSH-approved organic vapor respirator equipped with a dust/mist prefilter should be used. Protection factors vary depending upon the type of respirator used. Respirators should be used in accordance with OSHA requirements (29 CFR 1910.134).

General Comments

Use good personal hygiene practices. Wash hands and other exposed skin areas with plenty of mild soap and water before eating, drinking, smoking, use of toilet facilities, or leaving work. DO NOT use gasoline, kerosene, solvents or harsh abrasives as skin cleaners. Since specific exposure standards/control limits have not been established for this product, the "Oil Mist, Mineral" exposure limits shown below are suggested as minimum control guidelines.

Occupational Exposure Guidelines

Substance	Applicable Workplace Exposure Levels

Oil, Mineral (Mist)	**ACGIH (United States).** TWA: 5 mg/m^3 STEL: 10 mg/m^3 **OSHA (United States).** TWA: 5 mg/m^3

SECTION 9. PHYSICAL AND CHEMICAL PROPERTIES (TYPICAL)

Physical State	Liquid.	**Color**	Light amber	**Odor**	Mild petroleum odor
Specific Gravity	0.87 (Water = 1)	**pH**	Not applicable	**Vapor Density**	>1 (Air = 1)
Boiling Range	Not available.			**Melting/Freezing Point**	Not available.
Vapor Pressure	<0.001 kPa (<0.01 mm Hg) (at 20°C)			**Volatility**	Negligible volatility.
Solubility in Water	Negligible solubility in cold water.			**Viscosity (cSt @ 40°C)**	47
Flash Point	Open cup: 220°C (428°F) (Cleveland.).				
Additional Properties	Gravity, ºAPI (ASTM D287) = 30.4 @ 60º F Density = 7.28 Lbs/gal. Viscosity (ASTM D2161) = 240 SUS @ 100º F				

SECTION 10. STABILITY AND REACTIVITY

Chemical Stability	Stable.	**Hazardous Polymerization**	Not expected to occur.
Conditions to Avoid	Keep away from extreme heat, sparks, open flame, and strongly oxidizing conditions.		
Materials Incompatibility	Strong oxidizers.		
Hazardous Decomposition Products	No additional hazardous decomposition products were identified other than the combustion products identified in Section 5 of this MSDS.		

SECTION 11. TOXICOLOGICAL INFORMATION

For other health-related information, refer to the Emergency Overview on Page 1 and the Hazards Identification in Section 3 of this MSDS.

Toxicity Data

Highly-refined petroleum lubricant oils

ORAL (LD50): Acute: >5000 mg/kg [Rat].
DERMAL (LD50): Acute: >2000 mg/kg [Rabbit].

Mineral oil mists derived from highly refined oils are reported to have low acute and sub-acute toxicities in animals. Effects from single and short-term repeated exposures to high concentrations of mineral oil mists well above applicable workplace exposure levels include lung inflammatory reaction, lipoid granuloma formation and lipoid pneumonia. In acute and sub-acute studies involving exposures to lower concentrations of mineral oil mists at or near current work place exposure levels produced no significant toxicological effects. In long term studies (up to two years) no carcinogenic effects have been reported in any animal species tested.

Hydraulic oil

Repeated or prolonged skin contact with certain hydraulic oils can cause mild skin irritation characterized by drying, cracking (dermatitis) or oil acne. Injection under the skin, in muscle or into the blood stream can cause irritation, inflammation, swelling, fever, and systemic

effects, including mild central nervous system depression. Injection of pressurized hydrocarbons can cause severe, permanent tissue damage.

SECTION 12. ECOLOGICAL INFORMATION

Ecotoxicity

Analysis for ecological effects has not been conducted on this product. However, if spilled, this product and any contaminated soil or water may be harmful to human, animal, and aquatic life. Also, the coating action associated with petroleum and petroleum products can be harmful or fatal to aquatic life and waterfowl.

Environmental Fate

Biodegradability: Inherently biodegradable in aerobic conditions.

Partition Coefficient (log Kow): >6 (based on similar materials)

Photodegradation: Based on similar materials, this product will have little or no tendency to partition to air. Hydrocarbons from this product which do partition to air are expected to rapidly photodegrade.

Stability in Water: Not readily susceptible to hydrolysis under aquatic conditions.

Distribution: Principally to soil and sediment. Petroleum-based (mineral) lubricating oils normally will float on water. In stagnant or slow-flowing waterways, an oil layer can cover a large surface area. As a result, this oil layer might limit or eliminate natural atmospheric oxygen transport into the water. With time, if not removed, oxygen depletion in the waterway may be sufficient to cause a fish kill or create an anaerobic environment.

SECTION 13. DISPOSAL CONSIDERATIONS

Hazard characteristic and regulatory waste stream classification can change with product use. Accordingly, the responsibility of the user to determine the proper storage, transportation, treatment and/or disposal methodologies for spent materials and residues at the time of disposition.

Conditions of use may cause this material to become a "hazardous waste", as defined by federal or state regulations. It is the responsibility of the user to determine if the material is a "hazardous waste" at the time of disposal. Transportation, treatment, storage, and disposal of waste material must be conducted in accordance with RCRA regulations (see 40 CFR 260 through 40 CFR 271). State and/or local regulations may be more restrictive. Contact your regional US EPA office for guidance concerning case specific disposal issues. Empty drums and pails retain residue. DO NOT pressurize, cut, weld, braze, solder, drill, grind, or expose this product's empty container to heat, flame, or other ignition sources. DO NOT attempt to clean it. Empty drums and pails should be drained completely, properly bunged or sealed, and promptly sent to a reconditioner.

SECTION 14. TRANSPORT INFORMATION

The shipping description below may not represent requirements for all modes of transportation, shipping methods or locations outside of the United States.

US DOT Status Not regulated by the U.S. Department of Transportation as a hazardous material.

Proper Shipping Name Not regulated.

Hazard Class Not regulated.

Packing Group Not applicable.

UN/NA Number Not regulated.

Reportable Quantity A Reportable Quantity (RQ) has not been established for this material.

Placard(s)

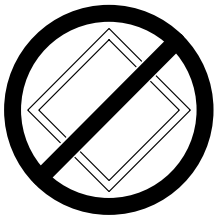

Emergency Response Guide No.	Not applicable.
MARPOL III Status	Not a DOT "Marine Pollutant" per 49 CFR 171.8.

Oil: The product(s) represented by this MSDS is (are) regulated as “oil” under 49 CFR Part 130. Shipments by rail or highway in packaging having a capacity of 3500 gallons or more or in a quantity greater 42,000 gallons are subject to these requirements. In addition, mixtures containing 10% or more of this product may be subject to these requirements.

SECTION 15. REGULATORY INFORMATION

TSCA Inventory	This product and/or its components are listed on the Toxic Substances Control Act (TSCA) inventory.
SARA 302/304 Emergency Planning and Notification	The Superfund Amendments and Reauthorization Act of 1986 (SARA) Title III requires facilities subject to Subparts 302 and 304 to submit emergency planning and notification information based on Threshold Planning Quantities (TPQs) and Reportable Quantities (RQs) for "Extremely Hazardous Substances" listed in 40 CFR 302.4 and 40 CFR 355. No components were identified.
SARA 311/312 Hazard Identification	The Superfund Amendments and Reauthorization Act of 1986 (SARA) Title III requires facilities subject to this subpart to submit aggregate information on chemicals by "Hazard Category" as defined in 40 CFR 370.2. This material would be classified under the following hazard categories: No SARA 311/312 hazard categories identified.
SARA 313 Toxic Chemical Notification and Release Reporting	This product contains the following components in concentrations above *de minimis* levels that are listed as toxic chemicals in 40 CFR Part 372 pursuant to the requirements of Section 313 of SARA: No components were identified.
CERCLA	The Comprehensive Environmental Response, Compensation, and Liability Act of 1980 (CERCLA) requires notification of the National Response Center concerning release of quantities of "hazardous substances" equal to or greater than the reportable quantities (RQ's) listed in 40 CFR 302.4. As defined by CERCLA, the term "hazardous substance" does not include petroleum, including crude oil or any fraction thereof which is not otherwise specifically designated in 40 CFR 302.4. Chemical substances present in this product or refinery stream that may be subject to this statute are: Zinc and Zinc Compounds, Concentration: <1%
Clean Water Act (CWA)	This material is classified as an oil under Section 311 of the Clean Water Act (CWA) and the Oil Pollution Act of 1990 (OPA). Discharges or spills which produce a visible sheen on waters of the United States, their adjoining shorelines, or into conduits leading to surface waters must be reported to the EPA's National Response Center at (800) 424-8802.
California Proposition 65	This material may contain the following components which are known to the State of California to cause cancer, birth defects or other reproductive harm, and may be subject to the requirements of California Proposition 65 (CA Health & Safety Code Section 25249.5): Toluene: <0.001% Ethyl acrylate: <0.0005%
New Jersey Right-to-Know Label	Petroleum Oil (Hydraulic Oil)
Additional Remarks	No additional regulatory remarks.

SECTION 16. OTHER INFORMATION

Refer to the top of Page 1 for the HMIS and NFPA Hazard Ratings for this product.

REVISION INFORMATION

Version Number 4.0

Revision Date 11/4/2011

ABBREVIATIONS

AP: Approximately EQ: Equal >: Greater Than <: Less Than

NA: Not Applicable ND: No Data NE: Not Established

ACGIH: American Conference of Governmental Industrial Hygienists

AIHA: American Industrial Hygiene Association

IARC: International Agency for Research on Cancer

NIOSH: National Institute of Occupational Safety and Health

NPCA: National Paint and Coating Manufacturers Association

EPA: US Environmental Protection Agency

HMIS: Hazardous Materials Information System

OSHA: Occupational Safety and Health Administration

NTP: National Toxicology Program

NFPA: National Fire Protection Association

DISCLAIMER OF LIABILITY

THE INFORMATION IN THIS MSDS WAS OBTAINED FROM SOURCES WHICH WE BELIEVE ARE RELIABLE. HOWEVER, THE INFORMATION IS PROVIDED WITHOUT ANY WARRANTY, EXPRESSED OR IMPLIED REGARDING ITS CORRECTNESS. SOME INFORMATION PRESENTED AND CONCLUSIONS DRAWN HEREIN A FROM SOURCES OTHER THAN DIRECT TEST DATA ON THE SUBSTANCE ITSELF. THIS MSDS WAS PREPARED AND IS TO BE USED ONLY FOR THIS PRODUCT. IF THE PRODUCT IS USED AS A COMPONENT IN ANOTHER PRODUCT, THIS MSDS INFORMATION MAY NOT BE APPLICABLE. USERS SHOULD MAKE THEIR OWN INVESTIGATIONS TO DETERMINE THE SUITABILITY OF THE INFORMATION OR PRODUCTS FOR THEIR PARTICULAR PURPOSE.

THE CONDITIONS OR METHODS OF HANDLING, STORAGE, USE, AND DISPOSAL OF THE PRODUCT ARE BEYOND OUR CONTROL AND MAY BE BEYOND OUR KNOWLEDGE. FOR THIS AND OTHER REASONS, WE DO NOT ASSUME RESPONSIBILITY AND EXPRESSLY DISCLAIM LIABILITY FOR LOSS, DAMAGE OR EXPENSE ARISING OUT OF OR IN ANY WAY CONNECTED WITH HANDLING, STORAGE, USE OR DISPOSAL OF THE PRODUCT.

* * * * * END OF MSDS * * * * *

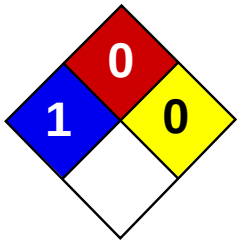

Health	2
Fire	0
Reactivity	0
Personal Protection	J

Material Safety Data Sheet
Potassium permanganate MSDS

Section 1: Chemical Product and Company Identification

Product Name: Potassium permanganate

Catalog Codes: SLP4912, SLP3892, SLP1075

CAS#: 7722-64-7

RTECS: SD6475000

TSCA: TSCA 8(b) inventory: Potassium permanganate

CI#: Not available.

Synonym: Potassium Permanganate, Biotech Grade

Chemical Name: Potassium Permanganate

Chemical Formula: KMnO4

Contact Information:

Sciencelab.com, Inc.
14025 Smith Rd.
Houston, Texas 77396

US Sales: **1-800-901-7247**
International Sales: **1-281-441-4400**

Order Online: ScienceLab.com

CHEMTREC (24HR Emergency Telephone), call: 1-800-424-9300

International CHEMTREC, call: 1-703-527-3887

For non-emergency assistance, call: 1-281-441-4400

Section 2: Composition and Information on Ingredients

Composition:

Name	CAS #	% by Weight
Potassium permanganate	7722-64-7	100

Toxicological Data on Ingredients: Potassium permanganate, Biotech: ORAL (LD50): Acute: 1090 mg/kg [Rat]. 2157 mg/kg [Mouse].

Section 3: Hazards Identification

Potential Acute Health Effects:
Hazardous in case of skin contact (irritant), of eye contact (irritant), of ingestion, of inhalation. Slightly hazardous in case of skin contact (permeator). Possibly corrosive to eyes and skin. The amount of tissue damage depends on length of contact. Eye contact can result in corneal damage or blindness. Skin contact can produce inflammation and blistering. Inhalation of dust will produce irritation to gastro-intestinal or respiratory tract, characterized by burning, sneezing and coughing. Severe over-exposure can produce lung damage, choking, unconsciousness or death. Prolonged exposure may result in skin burns and ulcerations. Over-exposure by inhalation may cause respiratory irritation.

Potential Chronic Health Effects:
CARCINOGENIC EFFECTS: Not available. MUTAGENIC EFFECTS: Mutagenic for bacteria and/or yeast. TERATOGENIC EFFECTS: Not available. DEVELOPMENTAL TOXICITY: Not available. The substance may be toxic to kidneys, liver, skin, central nervous system (CNS). Repeated or prolonged exposure to the substance can produce target organs damage. Repeated exposure of the eyes to a low level of dust can produce eye irritation. Repeated skin exposure can produce local skin destruction, or dermatitis. Repeated inhalation of dust can produce varying degree of respiratory irritation or lung damage.

Section 4: First Aid Measures

Eye Contact:
Check for and remove any contact lenses. In case of contact, immediately flush eyes with plenty of water for at least 15 minutes. Cold water may be used. Get medical attention immediately.

Skin Contact:
In case of contact, immediately flush skin with plenty of water for at least 15 minutes while removing contaminated clothing and shoes. Cover the irritated skin with an emollient. Cold water may be used.Wash clothing before reuse. Thoroughly clean shoes before reuse. Get medical attention immediately.

Serious Skin Contact:
Wash with a disinfectant soap and cover the contaminated skin with an anti-bacterial cream. Seek immediate medical attention.

Inhalation:
If inhaled, remove to fresh air. If not breathing, give artificial respiration. If breathing is difficult, give oxygen. Get medical attention.

Serious Inhalation:
Evacuate the victim to a safe area as soon as possible. Loosen tight clothing such as a collar, tie, belt or waistband. If breathing is difficult, administer oxygen. If the victim is not breathing, perform mouth-to-mouth resuscitation. WARNING: It may be hazardous to the person providing aid to give mouth-to-mouth resuscitation when the inhaled material is toxic, infectious or corrosive. Seek immediate medical attention.

Ingestion:
Do NOT induce vomiting unless directed to do so by medical personnel. Never give anything by mouth to an unconscious person. If large quantities of this material are swallowed, call a physician immediately. Loosen tight clothing such as a collar, tie, belt or waistband.

Serious Ingestion: Not available.

Section 5: Fire and Explosion Data

Flammability of the Product: Non-flammable.

Auto-Ignition Temperature: Not applicable.

Flash Points: Not applicable.

Flammable Limits: Not applicable.

Products of Combustion: Not available.

Fire Hazards in Presence of Various Substances: organic materials, metals, combustible materials

Explosion Hazards in Presence of Various Substances:
Risks of explosion of the product in presence of mechanical impact: Not available. Risks of explosion of the product in presence of static discharge: Not available. Explosive in presence of organic materials, of metals.

Fire Fighting Media and Instructions: Not applicable.

Special Remarks on Fire Hazards:
Spontaneously flammable on contact with ethylene glycol. Potassium Permanganate being conveyed through propylene tube ignited the tube. When solid hydroxylamine is brought into contact with solid potassium permanganate, there is produced immediately a with flame. Potassium permanganate decomposes hydrogen trisulfide so rapidly that sufficient heat is liberated to ignite the trisulfide. When Antimony or arsenic and solid potassium permanganate are ground together, the metals ignite.

Special Remarks on Explosion Hazards:
Take care in handling as explosions may occur if it is brought in contact with organic or other readily oxidizable substances, either in solution or in dry state. Explosive in contact with sulfuric acid or hydrogen peroxide. Potassium permanganate + acetic acid or acetic anhydride can explode if permanganate is not kept cold. Explosions can occur when permanganates come on contact with benzene, carbon disulfide, diethyl ether, ethyl alcohol, petroleum, or oganic matter. Contact with glycerol

may produce explosion. Crystals of potassium permanganate explode vigorously when ground with phosphorous. A mixture of .5% potassium permanganate + ammonium nitrate explosive caused an explosion 7 hrs. later. Addition of Potassium permanganate + dimethylformamide to give a 20% solution led to an explosion after 5 min. During a preparation of chlorine by addition of the concentrated acid (Hydrochloric acid) to solid potassium permanganate, a sharp explosion occurred on one occasion.

Section 6: Accidental Release Measures

Small Spill: Use appropriate tools to put the spilled solid in a convenient waste disposal container.

Large Spill:
Oxidizing material. Corrosive solid. Stop leak if without risk. Do not get water inside container. Avoid contact with a combustible material (wood, paper, oil, clothing...). Keep substance damp using water spray. Do not touch spilled material. Use water spray to reduce vapors. Prevent entry into sewers, basements or confined areas; dike if needed. Call for assistance on disposal. Be careful that the product is not present at a concentration level above TLV. Check TLV on the MSDS and with local authorities.

Section 7: Handling and Storage

Precautions:
Keep away from heat. Keep away from sources of ignition. Keep away from combustible material. Do not ingest. Do not breathe dust. In case of insufficient ventilation, wear suitable respiratory equipment. If ingested, seek medical advice immediately and show the container or the label. Avoid contact with skin and eyes. Keep away from incompatibles such as organic materials, metals, acids.

Storage:
Keep container tightly closed. Keep container in a cool, well-ventilated area. Separate from acids, alkalies, reducing agents and combustibles. See NFPA 43A, Code for the Storage of Liquid and Solid Oxidizers.

Section 8: Exposure Controls/Personal Protection

Engineering Controls:
Use process enclosures, local exhaust ventilation, or other engineering controls to keep airborne levels below recommended exposure limits. If user operations generate dust, fume or mist, use ventilation to keep exposure to airborne contaminants below the exposure limit.

Personal Protection:
Splash goggles. Synthetic apron. Vapor and dust respirator. Be sure to use an approved/certified respirator or equivalent. Gloves.

Personal Protection in Case of a Large Spill:
Splash goggles. Full suit. Vapor and dust respirator. Boots. Gloves. A self contained breathing apparatus should be used to avoid inhalation of the product. Suggested protective clothing might not be sufficient; consult a specialist BEFORE handling this product.

Exposure Limits:
TWA: 5 Consult local authorities for acceptable exposure limits.

Section 9: Physical and Chemical Properties

Physical state and appearance: Solid.

Odor: Odorless.

Taste: Sweetish, astringent.

Molecular Weight: 158.03 g/mole

Color: Purple. (Dark.)

pH (1% soln/water): Not available.

Boiling Point: Not available.

Melting Point: Decomposes.

Critical Temperature: Not available.

Specific Gravity: 2.7 @ 15 C (Water = 1)

Vapor Pressure: Not applicable.

Vapor Density: Not available.

Volatility: Not available.

Odor Threshold: Not available.

Water/Oil Dist. Coeff.: Not available.

Ionicity (in Water): Not available.

Dispersion Properties: See solubility in water, methanol, acetone.

Solubility:
Easily soluble in methanol, acetone. Partially soluble in cold water, hot water. Soluble in Sulfuric Acid

Section 10: Stability and Reactivity Data

Stability: The product is stable.

Instability Temperature: Not available.

Conditions of Instability: Incompatible materials

Incompatibility with various substances:
Highly reactive with organic materials, metals, acids. Reactive with reducing agents, combustible materials.

Corrosivity: Not available.

Special Remarks on Reactivity:
It is a powerful oxidizing agent. Incompatible with reducing agents, acids, formaldehyde, ammonium nitrate, dimethylformamide, glycerol, combustible materials, alcohols, arsenites, bromides, iodides, charcoal, organic substances, ferrous or mercurous salts, hypophosphites, hyposulfites, sulfites, peroxides, oxalates, ethylene glycol, Manganese salts in air oxidize the toxic sulfur dioxide to more toxic sulfur trioxide. Can react violently with most metal powders, ammonia, ammonium salts, phosphorous, many finely divided organic compounds (materials), flammable liquids, acids, sulfur.

Special Remarks on Corrosivity: Not available.

Polymerization: Will not occur.

Section 11: Toxicological Information

Routes of Entry: Absorbed through skin. Eye contact. Inhalation. Ingestion.

Toxicity to Animals:
Acute oral toxicity (LD50): 1090 mg/kg [Rat]. Lowest Published Lethal Dose: LDL[Woman] - Route: Oral; Dose: 100 mg/kg LDL[Human] - Route: Oral; Dose: 143 mg/kg.

Chronic Effects on Humans:
MUTAGENIC EFFECTS: Mutagenic for bacteria and/or yeast. May cause damage to the following organs: kidneys, liver, skin, central nervous system (CNS).

Other Toxic Effects on Humans:

Hazardous in case of skin contact (irritant), of eye contact (corrosive), of ingestion, of inhalation. Slightly hazardous in case of skin contact (permeator).

Special Remarks on Toxicity to Animals: Not available.

Special Remarks on Chronic Effects on Humans:
May cause adverse reproductive effects (Male and Female fertility) based on animal data. May affect genetic material (mutagenetic) based on animal data.

Special Remarks on other Toxic Effects on Humans:

Section 12: Ecological Information

Ecotoxicity: Not available.

BOD5 and COD: Not available.

Products of Biodegradation:
Possibly hazardous short term degradation products are not likely. However, long term degradation products may arise.

Toxicity of the Products of Biodegradation: The products of degradation are less toxic than the product itself.

Special Remarks on the Products of Biodegradation: Not available.

Section 13: Disposal Considerations

Waste Disposal:
Waste must be disposed of in accordance with federal, state and local environmental control regulations.

Section 14: Transport Information

DOT Classification: CLASS 5.1: Oxidizing material.

Identification: : Potassium permanganate UNNA: 1490 PG: II

Special Provisions for Transport: Not available.

Section 15: Other Regulatory Information

Federal and State Regulations:
Connecticut carcinogen reporting list.: Potassium permanganate Illinois toxic substances disclosure to employee act: Potassium permanganate Illinois chemical safety act: Potassium permanganate New York release reporting list: Potassium permanganate Rhode Island RTK hazardous substances: Potassium permanganate Pennsylvania RTK: Potassium permanganate Massachusetts RTK: Potassium permanganate Massachusetts spill list: Potassium permanganate New Jersey: Potassium permanganate New Jersey spill list: Potassium permanganate Louisiana spill reporting: Potassium permanganate California Director's list of Hazardous Substances: Potassium permanganate

Other Regulations:
OSHA: Hazardous by definition of Hazard Communication Standard (29 CFR 1910.1200). EINECS: This product is on the European Inventory of Existing Commercial Chemical Substances.

Other Classifications:

WHMIS (Canada):
CLASS C: Oxidizing material. CLASS E: Corrosive solid.

DSCL (EEC):
R8- Contact with combustible material may cause fire. R22- Harmful if swallowed. R50/53- Very toxic to aquatic organisms, may cause long-term adverse effects in the aquatic environment. S60- This material and its container must be disposed of as hazardous waste. S61- Avoid release to the environment. Refer to special instructions/Safety data sheets.

HMIS (U.S.A.):

Health Hazard: 2

Fire Hazard: 0

Reactivity: 0

Personal Protection: j

National Fire Protection Association (U.S.A.):

Health: 1

Flammability: 0

Reactivity: 0

Specific hazard:

Protective Equipment:
Gloves. Synthetic apron. Vapor and dust respirator. Be sure to use an approved/certified respirator or equivalent. Wear appropriate respirator when ventilation is inadequate. Splash goggles.

Section 16: Other Information

References: Not available.

Other Special Considerations: Not available.

Created: 10/10/2005 08:50 PM

Last Updated: 11/01/2010 12:00 PM

Material Safety Data Sheet
HYDRATED LIME SLURRY

Rev. Date:5/1/2008

SECTION 1: PRODUCT AND COMPANY IDENTIFICATION

Product Name:	**Hi-Cal Lime Slurry**	
Synonym/s:	**Hydrated Lime Slurry, Calcium Hydroxide Slurry, Lime Slurry, Slurry, Milk of Lime**	
Manufacturer:	**US Operations:** **Chemical Lime Co.** **3700 Hulen St.** **Fort Worth, TX 76107** **817-732-8164**	**Canadian Operations:** **Chemical Lime Co. of Canada Inc.** **20302-102B Ave.** **Langley, BC V1M 3H1** **604-888-4333**
Emergency Phone:	**Chemtrec 1-800-424-9300**	
Chemical Name: **Chemical Family:** **Chemical Formula:**	**Calcium Hydroxide** **Alkaline Earth Hydroxide** **$Ca(OH)_2 + H_2O$**	**WHMIS Classification:** **D2A, E**
Product Use/s:	**Water treatment, pH adjustment, FGT, Construction**	
Prepared By:	**Chemical Lime Co.** **R&D/Technical Services, KSA**	

SECTION 2: COMPOSITION / INFORMATION ON INGREDIENTS

Ingredient	CAS	OSHA PEL, TWA 8/40h (mg/m3)	ACGIH TLV, TWA 8/40h (mg/m3)	NIOSH REL, TWA 8/40h (mg/m3)	NIOSH IDLH (mg/m3)	Conc. (%)
Calcium Hydroxide, $Ca(OH)_2$ (Hydrated Lime)	**1305-62-0**	**15** (total dust) **5** (respirable)	**5**	**5**	**N.A.**	**20 - 55**
Magnesium Hydroxide, $Mg(OH)_2$ (Brucite)	**1309-42-8**	**N.A.**	**N.A.**	**N.A.**	**N.A.**	**< 5**
Crystalline Silica, SiO_2 (Quartz)	**14808-60-7**	**10/(SiO2% + 2)** (respirable)	**0.025** (respirable)	**0.05** (respirable)	**50**	**< 2**

OSHA Regulatory Status: This material is subject to 29 CFR 1910.1200 (Hazard Communication).

SECTION 3: HAZARDS IDENTIFICATION

Emergency Overview: Lime Slurry is an odorless, low viscosity suspension of calcium hydroxide in water. Contact can cause irritation to eyes, skin, gastrointestinal tract. In mist form or if material becomes dry, it will irritate the respiratory system.

Potential Health Effects

Eyes: Contact can cause severe irritation or burning of eyes, including permanent damage.

Skin: Contact can cause irritation of skin.

Ingestion: This product can cause severe irritation of gastrointestinal tract if swallowed.

Inhalation: This product can cause severe irritation of the respiratory system in mist or dry form. Long-term exposure may cause permanent damage. Lime Slurry is not listed by MSHA, OSHA, or IARC as a carcinogen. However, this product may contain trace amounts of crystalline silica in the form of quartz or crystobalite, which has been classified by IARC as a Group I carcinogen to humans when inhaled. Inhalation of silica can also cause a chronic lung disorder, silicosis.

Medical Conditions Aggravated by Exposure: Contact may aggravate disorders of the eyes, skin, gastrointestinal tract, and respiratory system.

Potential Environmental Effects: This material is alkaline and if released into water or moist soil will cause an increase in pH.

SECTION 4: FIRST AID MEASURES

Eyes: Immediately flush eyes with generous amounts of water or eye wash solution if water is unavailable. Pull back eyelid while flushing to ensure that all lime dust has been washed out. Seek medical attention promptly if the initial flushing of the eyes does not remove the irritant. Do not rub eyes.

Skin: Remove as much lime slurry as possible and wash exposed area with large amounts of water. If irritation persists, seek medical attention promptly.

Inhalation: Move victim to fresh air. Seek medical attention. If breathing has stopped, give artificial respiration.

Ingestion: Do not induce vomiting. Seek medical attention immediately. Never give anything by mouth unless instructed to do so by medical personnel.

SECTION 5: FIRE FIGHTING MEASURES

Fire Hazards:	Lime Slurry is not combustible or flammable. However, it reacts vigorously with acids, and may release heat sufficient to ignite combustible materials in specific instances. Lime Slurry is not considered to be an explosion hazard, although reaction with acids or other incompatible materials may rupture containers.
Hazardous Combustion Products:	None
Extinguishing Media:	Use extinguishing agent suitable for surrounding fire. Do not use water or halogenated compounds, except that large amounts of water may be used to deluge small quantities of Lime Slurry.
Fire Fighting Instructions:	Keep personnel away from and upwind of fire. Avoid skin contact or inhalation of dust. Wear full fire-fighting turn-out gear (full Bunker gear), and respiratory protection (SCBA).

SECTION 6: ACCIDENTAL RELEASE MEASURES

Spill / Leak Procedures:	**Do Not** use water on bulk material spills. Use proper protective equipment.
Small Spills:	Use wet material containment methods. Do not clean up with compressed air. Store collected materials in sealed plastic or non-aluminum metal containers. Residue on surfaces may be water washed.
Large Spills:	Use wet containment/collection techniques to collect spilled materials. If material has sufficiently dried to generate dust, evacuate area downwind of clean-up operations to minimize dust exposure. Store spilled materials in sealed plastic or non-aluminum metal containers.
Containment:	Minimize dust generation and prevent bulk release to sewers or waterways.
Clean-up:	Residual amounts of material can be flushed with large amounts of water. Equipment can be washed with either a mild vinegar and water solution, or detergent and water.

SECTION 7: HANDLING AND STORAGE

Handling:	Keep in tightly closed plastic or non-aluminum metal containers. Protect containers from physical damage. Avoid direct skin contact with the material.
Storage:	Store in a cool, dry, and well-ventilated location. Do not store near acids or other incompatible materials. Keep away from moisture. Do not store or ship in aluminum containers.

SECTION 8: EXPOSURE CONTROLS / PERSONAL PROTECTION

Engineering Controls: Provide ventilation adequate to maintain PELs.

Respiratory Protection: Use NIOSH/MSHA approved respirators if airborne concentration exceeds PELs.

Skin Protection: Use appropriate gloves and footwear to prevent skin contact. Clothing should fully cover arms and legs. Should lime slurry get inside clothing or gloves, remove the clothing and the lime slurry promptly.

Eye Protection: Use safety glasses with side shields or safety goggles. Contact lenses should not be worn when working with lime products.

Other: Eye wash fountain/stations and emergency showers should be available.

SECTION 9: PHYSICAL AND CHEMICAL PROPERTIES

Appearance: White or grayish-white liquid suspension	**Odor:** Odorless	**Physical State:** Solid
Boiling Point (°C/°F): 100 / 212	**Melting Point (°C/°F):** dec 580 / 1076	**Specific Gravity** (Apparent) g/cc: N.A. (True) g/cc: 1.2 - 1.5
Vapor Pressure (mm Hg): N.A.	**Vapor Density:** N.A.	**Evaporation Rate:** N.A.
Solubility in Water Material is a suspension of calcium hydroxide in water.	**pH (25°C/77°F):** 12.4	

SECTION 10: STABILITY AND REACTIVITY

Stability: Chemically stable, but decomposes at 580°C to form calcium oxide.
See also Incompatibility below.

Incompatibility/ Conditions to Avoid: Lime Slurry should not be mixed or stored with the following materials, due to the potential for vigorous reaction and release of heat:

Acids (unless in a controlled process)	Organic Acid Anhydrides
Reactive Fluoridated Compounds	Nitro-Organic Compounds
Reactive Brominated Compounds	Reactive Phosphorous Compounds
Reactive Powdered Metals	Interhalogenated Compounds

Hazardous Decomposition Products: None

Hazardous Polymerization: None

SECTION 11: TOXICOLOGICAL INFORMATION

If product becomes dry and is in its calcium hydroxide form, the following toxicological characteristics apply:
ORL-RAT LD50: 7,340 MG/KG
ORL-MUS LD50: 7,300 MG/KG

Lime Slurry is not listed by MSHA, OSHA, or IARC as a carcinogen, but this product may contain trace amounts of crystalline silica, which has been classified by IARC as carcinogenic to humans when inhaled in the form of quartz or crystobalite.

SECTION 12: ECOLOGICAL INFORMATION

Ecotoxicity: Because of the high pH of this product, it would be expected to produce significant ecotoxicity upon exposure to aquatic organisms and aquatic systems in high concentrations.

Environmental Fate: This material shows no bioaccumulation effect or food chain concentration toxicity.

SECTION 13: DISPOSAL CONSIDERATIONS

Dispose of in accordance with all applicable federal, state, and local environmental regulations. If this product as supplied, and unmixed, becomes a waste, it will not meet the criteria of a hazardous waste as defined under the U.S. Resource Conservation and Recovery Act (RCRA).

SECTION 14: TRANSPORTATION INFORMATION

Lime Slurry is not classified as a hazardous material by US DOT and is not regulated by the Transportation of Dangerous Goods (TDG) when shipped by any mode of transport.

SECTION 15: REGULATORY INFORMATION

U.S. EPA Regulations:
RCRA Hazardous Waste Number (40 CFR 261.33): not listed
RCRA Hazardous Waste Classification (40 CFR 261): not classified
CERCLA Hazardous Substance (40 CFR 302.4) unlisted specific per RCRA, Sec. 3001; CWA, Sec. 311(b)(4); CWA, Sec. 307(a), CAA, Sec. 112
CERCLA Reportable Quantity (RQ), not listed
SARA 311/312 Codes: not listed
SARA Toxic Chemical (40 CFR 372.65): not listed
SARA EHS (Extremely Hazardous Substance) (40 CFR 355): not listed, Threshold Planning Quantity (TPQ): not listed
All chemical ingredients are listed on the USEPA TSCA Inventory List.

OSHA/MSHA Regulations:
Air Contaminant (29 CRF 1910.1000, Table Z-1, Z-1-A): 5mg/M^3 TWA-8
MSHA: not listed
OSHA Specifically Regulated Substance (29 CFR 1910): not listed

State Regulations:
Consult state and local authorities for guidance. Components found in this product may contain trace amounts of inherent naturally occurring elements (such as, but not limited to arsenic and cadmium) that may be regulated.

Canada:
WHMIS Classification: "D2A" Materials Causing Other Toxic Effects
WHMIS Classification: "E" Corrosive Materials (listed due to corrosive effect on aluminum)
Canada DSL: Listed

NFPA Hazard Class: Health: 1 Flammability: 0 Reactivity: 0
HMIS Hazard Class: Health: 1 Flammability: 0 Reactivity: 0 Personal Protection: E


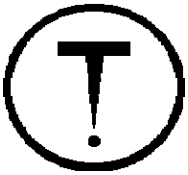
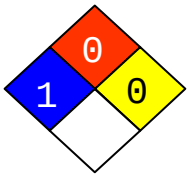

SECTION 16: OTHER INFORMATION

Prepared By: **Chemical Lime Company, R&D/Technical Services, KSA**

Chemical Lime Company provides the information contained herein in good faith but makes no representation as to its comprehensiveness or accuracy. This document is intended only as a guide to the appropriate precautionary handling of the material by a properly trained person. Individuals receiving this information must consult their own technical and legal advisors and/ or exercise their own judgment in determining its appropriateness for a particular purpose. Chemical Lime Company makes no representations or warranties, either express or implied, including without limitation and warranties of merchantability or fitness for a particular purpose with respect to the information set forth herein or the product(s) to which the information refers. Accordingly, Chemical Lime Company will not be responsible or liable for any claims, losses or damages resulting from the use of or reliance upon or failure to use this information.

Thermo Orion
a Thermo Electron business
500 Cummings Center
Beverly, MA 01915-6199 USA
Telephone 978-232-6000

MATERIAL SAFETY DATA SHEET

I. PRODUCT IDENTIFICATION

Product Name: ORP Standard	**Catalog No.** 967961 967901	**Effective Date** 2/16/01
Hazardous Shipment Labeling:	**DOT** None	**IATA** None
Prepared By	**Title** Quality Assurance Chemist	
Approved By	**Title** Director Regulatory Matters	

II. HAZARDOUS INGREDIENTS (IDENTIFY INFORMATION)

Hazardous Components * Specific Chemical Identity: Common Name(s)	**CAS NO.**	**%**	**OSHA PEL**	**ACGIH TLV**	**LD_{LO}** mg/Kg
Potassium Iodide (KI)	7681-11-0	40	None Listed	None Listed	120 (IVN-RAT)
Trade Secret - Chemical Identity Withheld	Trade Secrect	60	None Listed	None Listed	None Listed
***Aqueous mixture of non-hazardous proprietary ingredients not found on the most recent Massachusetts substance list.					

III. PHYSICAL DATA

Boiling Point 750mm Hg	106°C	**Freezing Point**	-6°C
Specific Gravity (H_2O=1)	1.08	**Vapor Pressure @ 25°C**	NA**
pH @ 25°C	(6.98-7.02)	**Solubility In Water, % by Wt @ 25°C**	Miscible
Volatiles % By Wt.	NA	**Evaporation Rate (BUTYL, ACETATE = 1)**	NA
Vapor Density (AIR = 1)	NA		
Appearance and Odor	Dark Amber Solution		

IV. FIRE AND EXPLOSION HAZARD DATA

Flash Point (Test Method) NA	**Autoignition Temperature** NA	
Flammable Limits in air, % by volume:	**Lower** NA	**Upper** NA
Extinguishing Media	Dry chemical, water, foam, or CO_2	
Special Fire-Fighting Procedures	Wear Self-contained breathing apparatus.	
Unusual Fire and Explosion Hazards	Toxic K_2O and I_2 fumes may be released during a fire.	

*Chemicals which are not classified as hazardous per U.S. OSHA guidelines (29CFR Parts 1915.2 or 1916.2) or the Massachusetts Substance List (105CMR670.000 Appendix A) will not necessarily be listed on this form even though one or more may be a constituent of this product

** NA Not available/not applicable

*** Non-hazardous component

Liability is expressly disclaimed for any loss or injury arising out of the use of this information or the use of any materials designated. Safe use of the materials is the responsibility of the user.

Document No. 232162-001
Rev . B

Printed in U.S.A.
Form MSDS/1192

MATERIAL SAFETY DATA SHEET

PRODUCT NAME: ORP Standard **Catalog No.: 967961, 967901**

V. REACTIVITY DATA

Stability:		**Conditions to Avoid**
Unstable	Stable X	None
Incompatibility (Materials to avoid) Incompatible with oxidants, metallic salts, calomel.		
Hazardous Decomposition Products	When heated emits K_2O and I^-	
Hazardous Polymerization:		**Condition to Avoid**
May Occur	Will Not Occur X	None

VI. HEALTH HAZARD DATA

Route(s) Of Entry:	**Inhalation?**	**Skin?**	**Ingestion?**
	No	No	Yes
Health Hazards (acute and chronic) Moderately toxic by ingestion. May irritate eyes or skin.			
Carcinogenicity:	**NTP?**	**IARC Monographs?**	**OSHA Regulated?**
Not found on these lists.			
Signs and Symptoms of Exposure Itching of skin, irritation of eyes if allowed to come in direct contact.			
Medical Conditions Generally Aggravated by Exposure	Cause stinging in an open cut.		
Emergency And First Aid Procedures Eyes – Irrigate with water. Skin – Wash with soap and water. If ingested – dilute with large amounts of water. Get medical attention for eyes or internal exposure.			

VII. PRECAUTIONS (SAFE HANDLING AND USE)

Steps To be Taken In Case Material Is Released or Spilled Clean up and set aside for waste disposal.
Waste Disposal Method Observe all Federal, State and local laws when disposing of this product..
Precautions To Be Taken In Handling and Storing None, product is a low hazard. NFPA rating: Scale (0-4); Health – 2, Fire - 0, Reactivity - 0, Specific - None.
Other Precautions Keep closure sealed and store at room temperature to protect product integrity. This product is not affected by SARA TITLE III: Not found on CAL Prop 65. Components are listed in EPA TSCA inventory.

VIII. CONTROL MEASURES

Respiratory Protection (specify type) None			
Ventilation	**Local Exhaust** None	**Special**	None
Ventilation	**Mechanical (General)** None	**Other**	None
Protective Gloves	Yes	**Eye Protection**	Safety glasses
Other Protective Clothing Or Equipment None			
Work/Hygienic Practices Emergency eye wash should be available. Wash off hands after working with this product.			

OAKTON®
P.O. Box 5136
Vernon Hills IL 60061, USA
Phone: 888-462-5866 Fax: 847-247-2984 E-mail: info@4oakton.com

Oakton 00654-08, 05942-61, 05942-62, 05942-64, 05942-65, 35653-03
pH 10.01 Buffer
Material Safety Data Sheet

I. PRODUCT AND COMPANY IDENTIFICATION:

CATALOG NUMBERS: 00654-08, 05942-61, 05942-62, 05942-64, 05942-65, 35653-03

PRODUCT NAME: pH 10.01 Buffer

PRODUCT USE: Buffer

NFPA RATINGS: HEALTH: 1 FLAMMABILITY: 0 REACTIVITY: 0

MANUFACTURER'S NAME: Thermo Fisher Scientific, Inc

ADDRESS: 166 Cummings Center, Beverly MA 01915, USA

PHONE NUMBER FOR INFORMATION: 978-232-6000

CHEMTREC® 24 hr Emergency: US 800-424-9300; International 703-527-3887

II. COMPOSITION/INFORMATION ON INGREDIENTS

		%	LD_{50} mg/kg
COMPONENT	Sodium Bicarbonate ($NaHCO_3$)		
CAS NO.	144-55-8	<1	4220 (ORL-RAT)
COMPONENT	Sodium Carbonate (Na_2CO_3)		
CAS NO.	497-19-8	<1	117 (IPR-MUS)
COMPONENT	Methyl Paraben ($C_8H_8O_3$)		
CAS NO.	99-76-3	<0.1	3000 (ORL-DOG)
COMPONENT	FD&C Blue #1 ($C_{37}H_{34}N_2O_9S_3Na_2$)		
CAS NO.	3844-45-9	<0.01	Not available
COMPONENT	Deionized Water (H_2O)		
CAS NO.	7732-18-5	99	190,000 (IPR-MUS)

III. HAZARDS IDENTIFICATION

Low hazard for normal use.
May be harmful if swallowed. May cause irritation to eyes and skin.
TARGET ORGANS: Eye, skin.
ACUTE TOXICITY: Low hazard.
CHRONIC TOXICITY: May cause irritation to skin after prolonged exposure.
MEDICAL CONDITIONS AGGRAVATED BY EXPOSURE: Disease of the skin.

IV. FIRST AID MEASURES

EYE AND SKIN CONTACT: Wash off with large amounts of water.
INGESTION: Give large amounts of water. Consult physician.
INHALATION: Not hazardous.

V. FIRE FIGHTING MEASURES

FLASH POINT: NA AUTOIGNITION POINT: NA
FLAMMABILITY LIMITS: UPPER: NA LOWER: NA
EXTINGUISHING MEDIA: Water, CO_2, dry chemical or foam.

VI. ACCIDENTAL RELEASE MEASURES

Take up with absorbent materials. Place in small containers for disposal. Wash spill site after material pick up is complete.

VII. HANDLING AND STORAGE

Always wear eye protection and gloves when working with this product.
Avoid contact with eyes, skin or clothing. Do not ingest.
Store at room temperature. Keep away from heat and keep container closed.

VIII. EXPOSURE CONTROLS/ PERSONAL PROTECTION

OSHA & ACGIH THRESHOLD LIMIT: None listed.
PROTECTIVE EQUIPMENT: Safety glasses, lab coat and gloves.

IX. PHYSICAL AND CHEMICAL PROPERTIES

STATE: Light blue liquid ODOR THRESHOLD: None
SENSITIVITY TO MECHANICAL IMPACT: None
SENSITIVITY TO STATIC DISCHARGE: None
COEFFICIENT OF OIL/WATER DISTRIBUTION: None
SOLUBILITY IN WATER: Soluble pH: 10.01
SPECIFIC GRAVITY: 1.0
BOILING POINT: 100ºC MELTING POINT: Not determined
VAPOR DENSITY: Not determined

X. STABILITY AND REACTIVITY

Product is stable. Hazardous polymerization will not occur.
Incompatibles: Na-K alloy, $NH_4H_2PO_4$, Al, P_2O_5, H_2SO_4.
Hazardous decomposition product: May emit fumes of carbon dioxides when heated to decomposition.

XI. TOXICOLOGICAL INFORMATION

Route of Exposure: Eyes, skin.
Teratogen Status: None
Mutagen Status: None
Reproductive Toxicity: None
Carcinogen Status: None

XII. ECOLOGICAL INFORMATION

None available.

XIII. DISPOSAL CONSIDERATIONS

Dispose of in a manner consistent with Federal, State and Local Regulations.

XIV. TRANSPORT INFORMATION

Product is not hazardous for transport.

XV. REGULATORY INFORMATION

EUROPEAN INFORMATION:

RISK PHRASES: None
SAFETY PHRASES: S24/25 Avoid contact with skin and eyes.

US/ CANADA INFORMATION

SARA/Title III: Ingredients not listed.
Cal. Proposition 65: Ingredients not listed.
US TSCA Inventory: Ingredients are listed.
CPR Class: None.
TDG Class: None.
MSDS discloses elements required by the CPR.

XVI. OTHER INFORMATION

THE ABOVE INFORMATION IS BELIEVED TO BE ACCURATE AND REPRESENTS THE BEST INFORMATION CURRENTLY AVAILABLE TO US. ALL PRODUCTS ARE OFFERED IN ACCORDANCE WITH THE MANUFACTURER'S CURRENT PRODUCTION SPECIFICATIONS AND ARE INTENDED SOLELY FOR USE IN ANALYTICAL TESTING. THE MANUFACTURER SHALL IN NO EVENT BE LIABLE FOR ANY INJURY, LOSS OR DAMAGE RESULTING FROM THE HANDLING, USE OR MISUSE OF THESE PRODUCTS.

MSDS prepared by Environmental, Health and Safety group.

Document Number 264594-001 Rev. A Effective Date: 2/17/2010

OAKTON®
P.O. Box 5136
Vernon Hills IL 60061, USA
Phone: 888-462-5866 Fax: 847-247-2984 E-mail: info@4oakton.com

Oakton 00654-00, 05942-21, 05942-22, 05942-24, 05942-25, 35653-01

pH 4.01 Buffer
Material Safety Data Sheet

I. PRODUCT AND COMPANY IDENTIFICATION:

CATALOG NUMBERS: 00654-00, 05942-21, 05942-22, 05942-24, 05942-25, 35653-01

PRODUCT NAME: pH 4.01 Buffer

PRODUCT USE: Buffer

NFPA RATINGS: HEALTH: 1 FLAMMABILITY: 0 REACTIVITY: 0

MANUFACTURER'S NAME: Thermo Fisher Scientific, Inc

ADDRESS: 166 Cummings Center, Beverly MA 01915, USA

PHONE NUMBER FOR INFORMATION: 978-232-6000

CHEMTREC® 24 hr Emergency: US 800-424-9300; International 703-527-3887

II. COMPOSITION/INFORMATION ON INGREDIENTS

		%	LD_{50} mg/kg
COMPONENT	Potassium Hydrogen Phthalate ($C_8H_5O_4K$)		
CAS NO.	877-24-7	1	> 3,200 (ORL-RAT)
COMPONENT	Amaranth Red Dye ($C_{20}H_{11}N_2O_{10}S_3Na_3$)		
CAS NO.	915-67-3	<0.01	1000 (IRP-MUS)
COMPONENT	Deionized Water (H_2O)		
CAS NO.	7732-18-5	99	190,000 (IPR-MUS)

III. HAZARDS IDENTIFICATION

Low hazard for normal use.
Maybe harmful if swallowed. May cause irritation to eyes and skin.
TARGET ORGANS: Eyes, skin.
ACUTE TOXICITY: Low hazards.
CHRONIC TOXICITY: May cause irritation to skin after prolonged exposure.
MEDICAL CONDITIONS AGGRAVATED BY EXPOSURE: Disease of the skin.

IV. FIRST AID MEASURES

EYE AND SKIN CONTACT: Wash off with large amounts of water.
INGESTION: Give large amounts of water. Consult physician.
INHALATION: Not hazardous.

V. FIRE FIGHTING MEASURES

FLASH POINT: NA AUTOIGNITION POINT: NA
FLAMMABILITY LIMITS: UPPER: NA LOWER: NA
EXTINGUISHING MEDIA: Water, CO_2, dry chemical or foam.

VI. ACCIDENTAL RELEASE MEASURES

Take up with absorbent materials. Place in small containers for disposal. Wash spill site after material pick up is complete.

VII. HANDLING AND STORAGE

Always wear eye protection and gloves when working with this product.
Avoid contact with eyes, skin or clothing. Do not ingest.
Store at room temperature. Keep away from heat and keep container closed.

VIII. EXPOSURE CONTROLS/ PERSONAL PROTECTION

OSHA & ACGIH THRESHOLD LIMIT: None listed.
PROTECTIVE EQUIPMENT: Safety glasses, lab coat and gloves.

IX. PHYSICAL AND CHEMICAL PROPERTIES

STATE: Light red liquid ODOR THRESHOLD: None
SENSITIVITY TO MECHANICAL IMPACT: None
SENSITIVITY TO STATIC DISCHARGE: None
COEFFICIENT OF OIL/WATER DISTRIBUTION: None
SOLUBILITY IN WATER: Soluble pH: 4.01
SPECIFIC GRAVITY: 1.0
BOILING POINT: 100ºC MELTING POINT: Not determined
VAPOR DENSITY: Not determined

X. STABILITY AND REACTIVITY

Product is stable. Hazardous polymerization will not occur.
Incompatibles: Strong oxidizing agents, nitric acid.
Hazardous decomposition product: None known.

XI. TOXICOLOGICAL INFORMATION

Route of Exposure: Eyes, skin.
Teratogen Status: None
Mutagen Status: None
Reproductive Toxicity: None.
Carcinogen Status: None.

XII. ECOLOGICAL INFORMATION

None available.

XIII. DISPOSAL CONSIDERATIONS

Dispose of in a manner consistent with Federal, State and Local Regulations.

XIV. TRANSPORT INFORMATION

Product is not hazardous for transport.

XV. REGULATORY INFORMATION

EUROPEAN INFORMATION:

RISK PHRASES: None
SAFETY PHRASES: S24/25 Avoid contact with skin and eyes.

US/CANADA INFORMATION

SARA/Title III: Ingredients not listed.
Cal. Proposition 65: Ingredients not listed.
US TSCA Inventory: Ingredients are listed
CPR Class: None.
TDG Class: None.
MSDS discloses elements required by the CPR.

XVI. OTHER INFORMATION

THE ABOVE INFORMATION IS BELIEVED TO BE ACCURATE AND REPRESENTS THE BEST INFORMATION CURRENTLY AVAILABLE TO US. ALL PRODUCTS ARE OFFERED IN ACCORDANCE WITH THE MANUFACTURER'S CURRENT PRODUCTION SPECIFICATIONS AND ARE INTENDED SOLELY FOR USE IN ANALYTICAL TESTING. THE MANUFACTURER SHALL IN NO EVENT BE LIABLE FOR ANY INJURY, LOSS OR DAMAGE RESULTING FROM THE HANDLING, USE OR MISUSE OF THESE PRODUCTS.

MSDS prepared by Environmental, Health and Safety group.

Document Number 264586-001 Rev. A Effective Date: 2/17/2010

OAKTON®

MATERIAL SAFETY DATA SHEET

Section 1. Chemical Product and Company Identification

Catalog Number(s) 00654-04, 35654-04, 05942-41, 05942-42, 05942-44, 05942-45, 35653-02	
Product Identity BUFFER, Standard, pH 7.00 (Color Coded Green)	
Manufacturer's Name RICCA CHEMICAL COMPANY	Emergency Telephone Number (24 hr) CHEMTREC®: 800-424-9300
Address (Number, Street, City, State, and ZIP Code) P.O. Box 13090	Telephone Number For Information 817-461-5601
Arlington, Texas 76094	Date Prepared 3-8-2000

Section 2. Composition / Information on Ingredients

Component	CAS Registry #	Percent Concentration	Exposure Limits ACGIH TLV	OSHA PEL
Sodium Phosphate, Dibasic	7558-79-4	< 1	N/A	N/A
Potassium Phosphate, Monobasic	7778-77-0	< 1	N/A	N/A
Preservative* *(No Mercury Compounds or Formaldehyde)	Proprietary	< 0.1	N/A	N/A
Inert Dye	Proprietary	< 0.1	N/A	N/A
Water, Deionized	7732-18-5	Balance	N/A	N/A

Section 3. Hazards Identification

☆☆

EMERGENCY OVERVIEW

Non-flammable, non-toxic, non-corrosive. Does not present any significant health hazards. May cause irritation. Wash areas of contact with water

☆☆

POTENTIAL HEALTH EFFECTS:

TARGET ORGANS: eyes, skin.

EYE CONTACT: May cause slight irritation.

INHALATION: May cause allergic respiratory reaction to those allergic to phosphates.

SKIN CONTACT: May cause slight irritation to those allergic to phosphates.

INGESTION: Large doses may cause stomach upset.

CHRONIC EFFECTS / CARCINOGENICITY:

IARC – No
NTP – No
OSHA – No

TERATOLOGY (BIRTH DEFECT) INFORMATION:

No information found in "Registry of Toxic Effects of Chemical Substances" or other information sources.

REPRODUCTION INFORMATION:

No information found in "Registry of Toxic Effects of Chemical Substances" or other information sources.

Section 4. First Aid Measures – In all cases, seek qualified evaluation.

EYE CONTACT: Irrigate immediately with large quantity of water for at least 15 minutes. Call a physician if irritation develops.

INHALATION: Remove to fresh air. Give artificial respiration if necessary. If breathing is difficult, give oxygen.

SKIN CONTACT: Flush with plenty of water for at least 15 minutes. Call a physician if irritation develops.

INGESTION: Dilute with water or milk. Call a physician if necessary.

Section 5. Fire Fighting Measures

FLAMMABLE PROPERTIES:

FLASH POINT: N/A METHOD USED: N/A

FLAMMABLE LIMITS

LFL: N/A UFL: N/A

EXTINGUISHING MEDIA: Use any means suitable for extinguishing surrounding fire.

FIRE & EXPLOSION HAZARDS: Not considered to be a fire or explosion hazard.

FIRE FIGHTING INSTRUCTIONS: Use normal procedures/instructions.

FIRE FIGHTING EQUIPMENT: Use protective clothing and breathing equipment appropriate for the surrounding fire.

Section 6. Accidental Release Measures

Absorb with suitable material (vermiculite, clay, etc.) and dispose of in accordance with local regulations. Check with local agencies for the proper disposal of phosphate containing solutions.

Section 7. Handling and Storage

As with all chemicals, wash hands thoroughly after handling. Avoid contact with eyes and skin. Protect from freezing and physical damage. SAFETY STORAGE CODE: GENERAL

Section 8. Exposure Controls / Personal Protection

ENGINEERING CONTROLS: No specific controls are needed. Normal room ventilation is adequate.

RESPIRATORY PROTECTION: Normal room ventilation is adequate.

SKIN PROTECTION: Chemical resistant gloves.

EYE PROTECTION: Safety glasses or goggles.

Section 9. Physical and chemical Properties

APPEARANCE:	Clear, green liquid	**pH:**	7
ODOR:	Odorless	**BOILING POINT (^{o}C):**	approximately 100
SOLUBILITY IN WATER:	Infinite	**MELTING POINT (^{o}C):**	approximately 0
SPECIFIC GRAVITY:	approximately 1	**VAPOR PRESSURE:**	N/A

Section 10. Stability and Reactivity

CHEMICAL STABILITY: Stable under normal conditions of use and storage.

INCOMPATIBILITY: None identified.

HAZARDOUS DECOMPOSITION PRODUCTS: Phosphorus oxides may form when heated to decomposition.

HAZARDOUS POLYMERIZATION: Will not occur.

Section 11. Toxicological Information

LD50, Oral, Rat: (Sodium Phosphate Dibasic) 17 gm/kg; LD50, Dermal, Rabbit: (Potassium Phosphate Monobasic) >4640 mg/kg; details of toxic effects not reported other than lethal dose value.

Section 12. Ecological Information

ECOTOXICOLOGICAL INFORMATION: No information found.

CHEMICAL FATE INFORMATION: No information found.

Section 13. Disposal Considerations

Dilute with water, then flush to sewer if local regulations allow for the flushing of phosphate containing solutions. If not allowed, save for recovery or recycling in an approved waste disposal facility. Always dispose of in accordance with local, state and federal regulations.

Section 14. Transport Information (Not meant to be all inclusive)

D.O.T. SHIPPING NAME:	Not regulated
D.O.T. HAZARD CLASS:	None
U.N. / N.A. NUMBER:	None
PACKING GROUP:	None
D.O.T. LABEL:	None

Section 15. Regulatory Information (Not meant to be all inclusive - selected regulation represented)

OSHA STATUS: The above items either do not contain any specifically hazardous material or the potentially hazardous material is present in such low concentration that the items do not present any immediate threat to health and safety. These items do not meet the OSHA Hazard Communication Standard (29 CFR 1910.1200) definition of a hazardous material.

TSCA STATUS: All components of this solution are listed on the TSCA Inventory or are mixtures (hydrates) of items listed on the TSCA Inventory.

CERCLA REPORTABLE QUANTITY: Sodium Phosphate, Dibasic - 5,000 pounds.

SARA TITLE III:

- **SECTION 302 EXTREMELY HAZARDOUS SUBSTANCES:** No
- **SECTION 311/312 HAZARDOUS CATEGORIES:** No
- **SECTION 313 TOXIC CHEMICALS:** No

RCRA STATUS: No

CALIFORNIA PROPOSITION 65: Not listed.

PENNSYLVANIA: Sodium Phosphate Dibasic is listed as an environmental hazard on the state Hazardous Substance list.

Section 16. Other Information

NFPA Ratings:	**Health: 1**	**Flammability: 0**	**Reactivity: 0**	**Special Notice Key: None**
HMIS® Ratings:	**Health: 1**	**Flammability: 0**	**Reactivity: 0**	**Protective Equipment: B (Protective eyewear, gloves)**

Rev 1, 8-25-2000: (Section 2) corrected concentration of preservative from 1 – 2 to < 0.1%.
Rev 2, 03-25-2003: Reviewed and approved, (Section 15) added CERCLA reportable quantity.
Rev 3, 03-20-2006: Reviewed and approved.

When handled properly by qualified personnel, the product described herein does not present a significant health or safety hazard. Alteration of its characteristics by concentration, evaporation, addition of other substances, or other means may present hazards not specifically addressed herein and which must be evaluated by the user. The information furnished herein is believed to be accurate and represents the best data currently available to us. No warranty, expressed or implied, is made and RICCA CHEMICAL COMPANY assumes no legal responsibility or liability whatsoever resulting from its use.

SAFETY DATA SHEET

PRODUCT

CORE SHELL® 71307

EMERGENCY TELEPHONE NUMBER(S)

(800) 424-9300 (24 Hours) CHEMTREC

1. CHEMICAL PRODUCT AND COMPANY IDENTIFICATION

PRODUCT NAME :	**CORE SHELL® 71307**
APPLICATION :	FLOCCULANT
COMPANY IDENTIFICATION :	Nalco Company 1601 W. Diehl Road Naperville, Illinois 60563-1198
EMERGENCY TELEPHONE NUMBER(S) :	(800) 424-9300 (24 Hours) CHEMTREC

NFPA 704M/HMIS RATING
HEALTH : 1 / 1 FLAMMABILITY : 1 / 1 INSTABILITY : 0 / 0 OTHER :
0 = Insignificant 1 = Slight 2 = Moderate 3 = High 4 = Extreme * = Chronic Health Hazard

2. COMPOSITION/INFORMATION ON INGREDIENTS

Based on our hazard evaluation, none of the substances in this product are hazardous.

3. HAZARDS IDENTIFICATION

****EMERGENCY OVERVIEW****

CAUTION
May cause irritation with prolonged contact.
Do not get in eyes, on skin, on clothing. Do not take internally. Use with adequate ventilation. In case of contact with eyes, rinse immediately with plenty of water and seek medical advice. After contact with skin, wash immediately with plenty of water. Protect product from freezing.
Wear suitable protective clothing.
May evolve oxides of carbon (COx) under fire conditions. May evolve oxides of nitrogen (NOx) and sulfur (SOx) under fire conditions. Water in contact with the product will cause slippery floor conditions.

PRIMARY ROUTES OF EXPOSURE :
Eye, Skin

HUMAN HEALTH HAZARDS - ACUTE :

EYE CONTACT :
Can cause mild irritation.

SKIN CONTACT :
Frequent or prolonged contact with product may defat and dry the skin, leading to discomfort and dermatitis.

INGESTION :
Not a likely route of exposure. If swallowed a jelly mass may form which in digestion may cause blockage.

INHALATION :
Not a likely route of exposure. No adverse effects expected.

SYMPTOMS OF EXPOSURE :
Acute :
A review of available data does not identify any symptoms from exposure not previously mentioned.
Chronic :
Frequent or prolonged contact with product may defat and dry the skin, leading to discomfort and dermatitis.

AGGRAVATION OF EXISTING CONDITIONS :
Skin contact may aggravate an existing dermatitis condition.

HUMAN HEALTH HAZARDS - CHRONIC :
No adverse effects expected other than those mentioned above.

4. FIRST AID MEASURES

EYE CONTACT :
Flush affected area with water. Get medical attention.

SKIN CONTACT :
Flush affected area with water. If symptoms develop, seek medical advice.

INGESTION :
Do not induce vomiting without medical advice. If conscious, washout mouth and give water to drink. Get medical attention.

INHALATION :
Remove to fresh air, treat symptomatically. If symptoms develop, seek medical advice.

NOTE TO PHYSICIAN :
Based on the individual reactions of the patient, the physician's judgement should be used to control symptoms and clinical condition.

5. FIRE FIGHTING MEASURES

FLASH POINT : > 200 °F / > 93.3 °C (PMCC)

EXTINGUISHING MEDIA :
This product would not be expected to burn unless all the water is boiled away. The remaining organics may be ignitable. Use extinguishing media appropriate for surrounding fire.

FIRE AND EXPLOSION HAZARD :
May evolve oxides of carbon (COx) under fire conditions. May evolve oxides of nitrogen (NOx) and sulfur (SOx) under fire conditions. Water in contact with the product will cause slippery floor conditions.

SPECIAL PROTECTIVE EQUIPMENT FOR FIRE FIGHTING :
In case of fire, wear a full face positive-pressure self contained breathing apparatus and protective suit.

6. ACCIDENTAL RELEASE MEASURES

PERSONAL PRECAUTIONS :
Notify appropriate government, occupational health and safety and environmental authorities. Do not touch spilled material. Stop or reduce any leaks if it is safe to do so. Use personal protective equipment recommended in Section 8 (Exposure Controls/Personal Protection).

METHODS FOR CLEANING UP :
SMALL SPILLS: Soak up spill with absorbent material. Place residues in a suitable, covered, properly labeled container. Wash affected area. Water in contact with the product will cause slippery floor conditions. LARGE SPILLS: Contain liquid using absorbent material, by digging trenches or by diking. Reclaim into recovery or salvage drums or tank truck for proper disposal. Contact an approved waste hauler for disposal of contaminated recovered material. Dispose of material in compliance with regulations indicated in Section 13 (Disposal Considerations).

ENVIRONMENTAL PRECAUTIONS :
This product is toxic to fish. It should not be directly discharged into lakes, ponds, streams, waterways or public water supplies.

7. HANDLING AND STORAGE

HANDLING :
Avoid eye and skin contact. Do not take internally. Ensure all containers are labeled. Keep the containers closed when not in use.

STORAGE CONDITIONS :
Protect product from freezing. Store in suitable labeled containers. Store the containers tightly closed. Store separately from oxidizers.

UNSUITABLE CONSTRUCTION MATERIAL :
Compatibility with Plastic Materials can vary; we therefore recommend that compatibility is tested prior to use.

8. EXPOSURE CONTROLS/PERSONAL PROTECTION

OCCUPATIONAL EXPOSURE LIMITS :
This product does not contain any substance that has an established exposure limit.

ENGINEERING MEASURES :
General ventilation is recommended.

RESPIRATORY PROTECTION :
Respiratory protection is not normally needed. If significant mists, vapors or aerosols are generated an approved respirator is recommended. A suitable filter material depends on the amount and type of chemicals being handled. Consider the use of filter type: Multi-contaminant cartridge. with a Particulate pre-filter. If respiratory protection is

required, institute a complete respiratory protection program including selection, fit testing, training, maintenance and inspection. In event of emergency or planned entry into unknown concentrations a positive pressure, full-facepiece SCBA should be used.

HAND PROTECTION :
Neoprene gloves Nitrile gloves Butyl gloves PVC gloves

SKIN PROTECTION :
Wear standard protective clothing.

EYE PROTECTION :
Wear chemical splash goggles.

HYGIENE RECOMMENDATIONS :
Keep an eye wash fountain available. Keep a safety shower available. If clothing is contaminated, remove clothing and thoroughly wash the affected area. Launder contaminated clothing before reuse.

9. PHYSICAL AND CHEMICAL PROPERTIES

PHYSICAL STATE	Emulsion
APPEARANCE	Opaque Off-white Light brown
ODOR	Hydrocarbon

SPECIFIC GRAVITY	0.995 - 1.078 @ 77 °F / 25 °C
DENSITY	8.30 - 9.00 lb/gal
SOLUBILITY IN WATER	Emulsifiable
pH (100 %)	4.0 - 5.0
VISCOSITY	400 - 1,500 cps @ 72 °F / 22 °C
VOC CONTENT	28.7 % Calculated

Note: These physical properties are typical values for this product and are subject to change.

10. STABILITY AND REACTIVITY

STABILITY :
Stable under normal conditions.

HAZARDOUS POLYMERIZATION :
Hazardous polymerization will not occur.

CONDITIONS TO AVOID :
Avoid temperatures below 0 and above 93 degrees C which will cause polymer to precipitate. Avoid extremes of temperature.

MATERIALS TO AVOID :
Addition of water results in gelling. Contact with strong oxidizers (e.g. chlorine, peroxides, chromates, nitric acid, perchlorate, concentrated oxygen, permanganate) may generate heat, fires, explosions and/or toxic vapors.

HAZARDOUS DECOMPOSITION PRODUCTS :
Under fire conditions: Oxides of carbon, Oxides of nitrogen, Oxides of sulfur

11. TOXICOLOGICAL INFORMATION

No toxicity studies have been conducted on this product.

SENSITIZATION :
This product is not expected to be a sensitizer.

CARCINOGENICITY :
None of the substances in this product are listed as carcinogens by the International Agency for Research on Cancer (IARC), the National Toxicology Program (NTP) or the American Conference of Governmental Industrial Hygienists (ACGIH).

HUMAN HAZARD CHARACTERIZATION :
Based on our hazard characterization, the potential human hazard is: Low

12. ECOLOGICAL INFORMATION

ECOTOXICOLOGICAL EFFECTS :

The tests for (products or similar products) were performed in clean water as set forth by USEPA (EPA/600/4-90/027). In order to evaluate the potential toxicity mitigation, the tests for (representative polymers) were performed in environmentally relevant water with dissolved organic carbon (DOC: 4.5 mg/l). The toxicity of this product is due to an external mode of action, e.g., suffocation or immobilization. In the presence of suspended material, e.g., DOC, the polymers are bound to suspended material and the bioavailability is substantially reduced. As a result, the toxicity is expected to be lower. Under normal use and discharge conditions, the LC50 values of the representative polymers tested in the presence of DOC are expected to apply to this product. However, for large spills, the clean water data is more applicable.

Acute Fish Results :

Species	Exposure	Test Type	Value	Test Descriptor
Zebra Danio	96 hrs	LC50	1 - 10 mg/l	Representative polymer tested in water with DOC
Inland Silverside	96 hrs	LC50	185.14 mg/l	Product
Rainbow Trout	96 hrs	LC50	0.51 mg/l	Product

ACUTE INVERTEBRATE RESULTS :

Species	Exposure	Test Type	Value	Test Descriptor
Daphnia magna	48 hrs	LC50	10 - 100 mg/l	Representative polymer tested in water with DOC
Daphnia magna	48 hrs	LC50	6.09 mg/l	Product
Mysid Shrimp (Mysidopsis	96 hrs	LC50	3.38 mg/l	Product

bahia)				

CHRONIC FISH RESULTS :

Species	Exposure	Test Type	Value	End Point	Test Descriptor
Topsmelt	7 Days	EC25 / IC25	> 10 mg/l		Similar Product
Fathead Minnow	7 Days	EC25 / IC25	1.55 mg/l	Growth	Similar Product
Topsmelt	7 Days	LOEC	> 10 mg/l		Similar Product
Fathead Minnow	7 Days	LOEC	2.5 mg/l	Growth	Similar Product
Topsmelt	7 Days	NOEC	1 mg/l		Similar Product
Fathead Minnow	7 Days	NOEC	1.25 mg/l	Growth	Similar Product

Chronic Invertebrate Results :

Species	Exposure	Test Type	Value	End Point	Test Descriptor
Ceriodaphnia dubia	7 Days	LOEC	0.313 mg/l	Reproduction	Similar Product
Ceriodaphnia dubia	7 Days	EC25 / IC25	0.25 mg/l	Reproduction	Similar Product
Ceriodaphnia dubia	7 Days	NOEC	0.156 mg/l	Reproduction	Similar Product

ADDITIONAL ECOLOGICAL DATA
NOEC on earthworm: > 1000 mg/l (representative polymer) AOX information: Product contains no organic halogens.

MOBILITY :
The environmental fate was estimated using a level III fugacity model embedded in the EPI (estimation program interface) Suite TM, provided by the US EPA. The model assumes a steady state condition between the total input and output. The level III model does not require equilibrium between the defined media. The information provided is intended to give the user a general estimate of the environmental fate of this product under the defined conditions of the models.
If released into the environment this material is expected to distribute to the air, water and soil/sediment in the approximate respective percentages;

Air	Water	Soil/Sediment
<5%	10 - 30%	70 - 90%

The portion in water is expected to be soluble or dispersible.

BIOACCUMULATION POTENTIAL
This preparation or material is not expected to bioaccumulate.

ENVIRONMENTAL HAZARD AND EXPOSURE CHARACTERIZATION
Based on our hazard characterization, the potential environmental hazard is: High

If released into the environment, see CERCLA/SUPERFUND in Section 15.

13. DISPOSAL CONSIDERATIONS

If this product becomes a waste, it is not a hazardous waste as defined by the Resource Conservation and Recovery Act (RCRA) 40 CFR 261, since it does not have the characteristics of Subpart C, nor is it listed under Subpart D.

As a non-hazardous waste, it is not subject to federal regulation. Consult state or local regulation for any additional handling, treatment or disposal requirements. For disposal, contact a properly licensed waste treatment, storage, disposal or recycling facility.

14. TRANSPORT INFORMATION

The information in this section is for reference only and should not take the place of a shipping paper (bill of lading) specific to an order. Please note that the proper Shipping Name / Hazard Class may vary by packaging, properties, and mode of transportation. Typical Proper Shipping Names for this product are as follows.

LAND TRANSPORT :

Proper Shipping Name :	PRODUCT IS NOT REGULATED DURING TRANSPORTATION

AIR TRANSPORT (ICAO/IATA) :

Proper Shipping Name :	PRODUCT IS NOT REGULATED DURING TRANSPORTATION

MARINE TRANSPORT (IMDG/IMO) :

Proper Shipping Name :	ENVIRONMENTALLY HAZARDOUS SUBSTANCE, LIQUID, N.O.S.
Technical Name(s) :	Cationic polymer
UN/ID No :	UN 3082
Hazard Class - Primary :	9
Packing Group :	III

15. REGULATORY INFORMATION

This section contains additional information that may have relevance to regulatory compliance. The information in this section is for reference only. It is not exhaustive, and should not be relied upon to take the place of an individualized compliance or hazard assessment. Nalco accepts no liability for the use of this information.

NATIONAL REGULATIONS, USA :

OSHA HAZARD COMMUNICATION RULE, 29 CFR 1910.1200 :
Based on our hazard evaluation, none of the substances in this product are hazardous.

CERCLA/SUPERFUND, 40 CFR 302 :
Notification of spills of this product is not required.

SARA/SUPERFUND AMENDMENTS AND REAUTHORIZATION ACT OF 1986 (TITLE III) - SECTIONS 302, 311, 312, AND 313 :

SECTION 302 - EXTREMELY HAZARDOUS SUBSTANCES (40 CFR 355) :
This product does not contain substances listed in Appendix A and B as an Extremely Hazardous Substance.

SECTIONS 311 AND 312 - MATERIAL SAFETY DATA SHEET REQUIREMENTS (40 CFR 370) :
Our hazard evaluation has found that this product is not hazardous under 29 CFR 1910.1200.

Under SARA 311 and 312, the EPA has established threshold quantities for the reporting of hazardous chemicals. The current thresholds are: 500 pounds or the threshold planning quantity (TPQ), whichever is lower, for extremely hazardous substances and 10,000 pounds for all other hazardous chemicals.

SECTION 313 - LIST OF TOXIC CHEMICALS (40 CFR 372) :
This product does not contain substances on the List of Toxic Chemicals.

TOXIC SUBSTANCES CONTROL ACT (TSCA) :
The substances in this preparation are included on or exempted from the TSCA 8(b) Inventory (40 CFR 710)

FEDERAL WATER POLLUTION CONTROL ACT, CLEAN WATER ACT, 40 CFR 401.15 / formerly Sec. 307, 40 CFR 116.4 / formerly Sec. 311 :
This product may contain trace levels (<0.1% for carcinogens, <1% all other substances) of the following substance(s) listed under the regulation. Additional components may be unintentionally present at trace levels.

Substance(s)	Citations
• Adipic Acid	Sec. 311

CLEAN AIR ACT, Sec. 112 (Hazardous Air Pollutants, as amended by 40 CFR 63), Sec. 602 (40 CFR 82, Class I and II Ozone Depleting Substances) :
This product may contain trace levels (<0.1% for carcinogens, <1% all other substances) of the following substance(s) listed under the regulation. Additional components may be unintentionally present at trace levels.

Substance(s)	Citations
• Acrylamide	Sec. 112

CALIFORNIA PROPOSITION 65 :
This product contains no listed substances known to the State of California to cause cancer, birth defects or other reproductive harm, at levels, which would require a warning under the statute.

MICHIGAN CRITICAL MATERIALS :
Substances listed under this regulation are not intentionally added or expected to be present in this product. Listed components may be present at trace levels.

STATE RIGHT TO KNOW LAWS :
The following substances are disclosed for compliance with State Right to Know Laws:

Adipic Acid 124-04-9

INTERNATIONAL CHEMICAL CONTROL LAWS :

CANADIAN ENVIRONMENTAL PROTECTION ACT (CEPA) :
The substance(s) in this preparation are included in or exempted from the Domestic Substance List (DSL).

AUSTRALIA
All substances in this product comply with the National Industrial Chemicals Notification & Assessment Scheme (NICNAS).

CHINA
All substances in this product comply with the Provisions on the Environmental Administration of New Chemical Substances and are listed on or exempt from the Inventory of Existing Chemical Substances China (IECSC).

EUROPE
The substance(s) in this preparation are included in or exempted from the EINECS or ELINCS inventories

JAPAN
All substances in this product comply with the Law Regulating the Manufacture and Importation Of Chemical Substances and are listed on the Existing and New Chemical Substances list (ENCS).

KOREA
All substances in this product comply with the Toxic Chemical Control Law (TCCL) and are listed on the Existing Chemicals List (ECL)

NEW ZEALAND
All substances in this product comply with the Hazardous Substances and New Organisms (HSNO) Act 1996,and are listed on or are exempt from the New Zealand Inventory of Chemicals.

PHILIPPINES
All substances in this product comply with the Republic Act 6969 (RA 6969) and are listed on the Philippines Inventory of Chemicals & Chemical Substances (PICCS).

16. OTHER INFORMATION

This product material safety data sheet provides health and safety information. The product is to be used in applications consistent with our product literature. Individuals handling this product should be informed of the recommended safety precautions and should have access to this information. For any other uses, exposures should be evaluated so that appropriate handling practices and training programs can be established to insure safe workplace operations. Please consult your local sales representative for any further information.

REFERENCES

Threshold Limit Values for Chemical Substances and Physical Agents and Biological Exposure Indices, American Conference of Governmental Industrial Hygienists, OH., (Ariel Insight™ CD-ROM Version), Ariel Research Corp., Bethesda, MD.

Hazardous Substances Data Bank, National Library of Medicine, Bethesda, Maryland (TOMES CPS™ CD-ROM Version), Micromedex, Inc., Englewood, CO.

IARC Monographs on the Evaluation of the Carcinogenic Risk of Chemicals to Man, Geneva: World Health Organization, International Agency for Research on Cancer.

Integrated Risk Information System, U.S. Environmental Protection Agency, Washington, D.C. (TOMES CPS™ CD-ROM Version),
Micromedex, Inc., Englewood, CO.

Annual Report on Carcinogens, National Toxicology Program, U.S. Department of Health and Human Services, Public Health Service.

Title 29 Code of Federal Regulations, Part 1910, Subpart Z, Toxic and Hazardous Substances, Occupational Safety and Health Administration (OSHA), (Ariel Insight™ CD-ROM Version), Ariel Research Corp., Bethesda, MD.

Registry of Toxic Effects of Chemical Substances, National Institute for Occupational Safety and Health, Cincinnati, OH,
(TOMES CPS™ CD-ROM Version), Micromedex, Inc., Englewood, CO.

Ariel Insight™ (An integrated guide to industrial chemicals covered under major regulatory and advisory programs), North American Module, Western European Module, Chemical Inventories Module and the Generics Module (Ariel Insight™ CD-ROM Version), Ariel Research Corp., Bethesda, MD.

The Teratogen Information System, University of Washington, Seattle, WA (TOMES CPS™ CD-ROM Version), Micromedex, Inc., Englewood, CO.

Prepared By : Product Safety Department
Date issued : 02/15/2012
Version Number : 1.17

Potassium Permanganate Solution, 0.1M

MSDS # 584.10

Section 1: Product and Company Identification

Potassium Permanganate Solution, 0.1M

Synonyms/General Names: Chameleon Mineral
Product Use: For educational use only
Manufacturer: Columbus Chemical Industries, Inc., Columbus, WI 53925.

24 Hour Emergency Information Telephone Numbers

CHEMTREC (USA): 800-424-9300 **CANUTEC (Canada): 613-424-6666**

ScholAR Chemistry; 5100 W. Henrietta Rd, Rochester, NY 14586; (866) 260-0501; www.Scholarchemistry.com

Section 2: Hazards Identification

Violet solution, no odor.

HMIS (0 to 4)

Health	1
Fire Hazard	0
Reactivity	0

WARNING! Oxidizing agent and slightly toxic by ingestion.
Target organs: None known

This material is considered hazardous by the OSHA Hazard Communication Standard (29 CFR 1910.1200).

Section 3: Composition / Information on Ingredients

Potassium Permanganate (7722-64-7), 1-2%. Water (7732-18-5), 98-99%.

Section 4: First Aid Measures

Always seek professional medical attention after first aid measures are provided.

Eyes: Immediately flush eyes with excess water for 15 minutes, lifting lower and upper eyelids occasionally.
Skin: Immediately flush skin with excess water for 15 minutes while removing contaminated clothing.
Ingestion: Call Poison Control immediately. Rinse mouth with cold water. Give victim 1-2 cups of water or milk to drink. Induce vomiting immediately.
Inhalation: Remove to fresh air. If not breathing, give artificial respiration.

Section 5: Fire Fighting Measures

Oxidizing agent. When heated to decomposition, emits acrid fumes of manganese oxides and potassium hydroxide.
Protective equipment and precautions for firefighters: Use foam or dry chemical to extinguish fire. Firefighters should wear full fire fighting turn-out gear and respiratory protection (SCBA). Cool container with water spray. Material is not sensitive to mechanical impact or static discharge.

Section 6: Accidental Release Measures

Use personal protection recommended in Section 8. Isolate the hazard area and deny entry to unnecessary and unprotected personnel. Contain spill with sand or absorbent material and place in sealed bag or container for disposal. Ventilate and wash spill area after pickup is complete. See Section 13 for disposal information.

Section 7: Handling and Storage Yellow

Handling: Use with adequate ventilation and do not breathe dust or vapor. Avoid contact with skin, eyes, or clothing. Wash hands thoroughly after handling.
Storage: Store in Oxidizer Storage Area [Yellow Storage] with other oxidizers and away from any combustible materials. Store in a cool, dry, well-ventilated, locked store room away from incompatible materials.

Section 8: Exposure Controls / Personal Protection

Use ventilation to keep airborne concentrations below exposure limits. Have approved eyewash facility, safety shower, and fire extinguishers readily available. Wear chemical splash goggles and chemical resistant clothing such as gloves and aprons. Wash hands thoroughly after handling material and before eating or drinking. Exposure guidelines: Potassium Permanganate: OSHA PEL: Not Available, ACGIH: TLV: Not Available, STEL: Not Available.

Section 9: Physical and Chemical Properties

Molecular formula	KNO_3.	**Appearance**	Violet solution solid.	
Molecular weight	101.11.	**Odor**	No odor.	
Specific Gravity	1.02 g/mL @ 20°C.	**Odor Threshold**	N/A.	
Vapor Density (air=1)	N/A.	**Solubility**	Soluble in water .	
Melting Point	N/A.	**Evaporation rate**	N/A.	*(Butyl acetate = 1).*
Boiling Point/Range	N/A.	**Partition Coefficient**	N/A.	*(log P_{OW}).*
Vapor Pressure (20°C)	N/A.	**pH**	N/A.	
Flash Point:	N/A.	**LEL**	N/A.	
Autoignition Temp.:	N/A.	**UEL**	N/A.	

N/A = Not available or applicable

Section 10: Stability and Reactivity

Stability: Stable under normal conditions of use and storage.
Incompatibility: Reducing agents, alcohols, bromides, iodides, charcoal, hydrochloric acid, organic material, ferrous or mercurous salt, sulfites, peroxides or oxalates.
Shelf life: Indefinite shelf life, store in cool, dry environment.

Section 11: Toxicology Information

Acute Symptoms/Signs of exposure: ***Eyes***: Redness, tearing, itching, burning, conjunctivitis. ***Skin***: Redness, itching. ***Ingestion***: Irritation and burning sensations of mouth and throat, nausea, vomiting and abdominal pain. ***Inhalation***: Irritation of mucous membranes, coughing, wheezing, shortness of breath,
Chronic Effects: No information found.
Sensitization: none expected
Potassium Permanganate: LD50 [oral, rat]; 1090mg/kg; LC50 [rat]; N/A; LD50 Dermal [rabbit]; N/A
Material has not been found to be a carcinogen nor produce genetic, reproductive, or developmental effects.

Section 12: Ecological Information

Ecotoxicity (aquatic and terrestrial): Toxic to beneficial microorganisms (e.g. soil and sewage treatment microorganisms).. Do not release to environment.

Section 13: Disposal Considerations

Check with all applicable local, regional, and national laws and regulations. Local regulations may be more stringent than regional or national regulations. Small amounts of this material may be suitable for sanitary sewer or trash disposal.

Section 14: Transport Information

DOT Shipping Name:	Not regulated by DOT.	**Canada TDG:**	Not regulated by TDG.
DOT Hazard Class:		**Hazard Class:**	
Identification Number:		**UN Number:**	

Section 15: Regulatory Information

EINECS: Listed (231-760-3) .
TSCA: All components are listed or are exempt.
WHMIS Canada: C, E: Oxidizing material, Corrosive.
California Proposition 65: Not listed.

The product has been classified in accordance with the hazard criteria of the Controlled Products Regulations and the MSDS contains all the information required by the Controlled Products Regulations.

Section 16: Other Information

Current Issue Date: January 10, 2012
Disclaimer: Scholar Chemistry and Columbus Chemical Industries, Inc., ("S&C") believes that the information herein is factual but is not intended to be all inclusive. The information relates only to the specific material designated and does not relate to its use in combination with other materials or its use as to any particular process. Because safety standards and regulations are subject to change and because S&C has no continuing control over the material, those handling, storing or using the material should satisfy themselves that they have current information regarding the particular way the material is handled, stored or used and that the same is done in accordance with federal, state and local law. ***S&C makes no warranty, expressed or implied, including (without limitation) warranties with respect to the completeness or continuing accuracy of the information contained herein or with respect to fitness for any particular use.***

Material Name: OATEY PVC REGULAR CLEAR – LO-VOC FORMULA

* * * Section 1 - Product and Company Identification * * *

MSDS #1100E

Part Numbers: Clear - 31012, 31013, 31014, 31015, 31016, 31958, 31959, 31960, 31961

Manufacturer Information

Oatey Co.
4700 West 160th Street
Cleveland, OH 44135

Phone: 216-267-7100

For Emergency First Aid call 1-877-740-5015. For chemical transportation emergencies ONLY, call Chemtrec at 1-800-424-9300. Outside the U.S. 1- 703-527-3887.

* * * Section 2 - Hazards Identification * * *

GHS Classification:

Flammable Liquids - Category 2
Acute Toxicity Oral - Category 4
Acute Toxicity Dermal - Category 4
Acute Toxicity Inhalation - Category 4
Eye Damage/Irritation - Category 2A
Carcinogenicity - Category 2
Specific Target Organ Toxicity Single Exposure - Category 3

GHS LABEL ELEMENTS

Symbol(s)

Signal Word

Danger

Hazard Statements

Highly flammable liquid and vapor.
Harmful if swallowed.
Harmful in contact with skin.
Harmful if inhaled.
Causes serious eye irritation.
Contains a chemical classified by the US EPA as a suspected possible carcinogen.
May cause respiratory irritation.
May cause drowsiness or dizziness.

Precautionary Statements

Prevention

Keep away from heat/sparks/open flames and hot surfaces. - No smoking.
Keep container tightly closed.
Use explosion-proof electrical/ventilating/lighting/equipment.
Use only non-sparking tools.
Take precautionary measures against static discharge.
Wear protective gloves/eye protection/face protection.
Wash thoroughly after handling.
Do not eat, drink or smoke when using this product.
Obtain special instructions before use.
Do not handle until all safety precautions have been read and understood.
Avoid breathing fume/gas/mist/vapors.
Use only outdoors or in a well-ventilated area.

Response

If on skin (or hair): Remove/Take off immediately all contaminated clothing. Rinse skin with water/shower. Wash contaminated clothing before reuse.
If swallowed: Call a poison center or doctor/physician if you feel unwell. Rinse mouth. Do not induce vomiting.
If inhaled: Remove victim to fresh air and keep at rest in a position comfortable for breathing. Call a poison center or doctor/physician if you feel unwell.
If in eyes: Rinse cautiously with water for several minutes. Remove contact lenses, if present and easy to do. Continue rinsing. Immediately call a poison center or doctor/physician.
If exposed or concerned Get medical advice/attention.
In case of fire: Use dry chemical, CO_2, or foam to extinguish fire.

Storage

Store in a well-ventilated place. Keep cool.
Store locked up.

Disposal

Dispose of contents/container in accordance with local/regional/national/international regulations.

* * * Section 3 - Composition / Information on Ingredients * * *

CAS #	Component	Percent
109-99-9	Tetrahydrofuran	20-40
78-93-3	Methyl ethyl ketone	15-35
108-94-1	Cyclohexanone	10-20
67-64-1	Acetone	10-20
9002-86-2	PVC (Chloroethylene, polymer)	10-18

* * * Section 4 - First Aid Measures * * *

First Aid: Eyes

If material gets into eyes or if fumes cause irritation, immediately flush eyes with plenty of water until chemical is removed. If irritation persists, get medical attention immediately.

First Aid: Skin

Remove contaminated clothing immediately. Wash all exposed areas with soap and water. Get medical attention if irritation develops. Remove dried cement with hand cleaner or baby oil.

First Aid: Ingestion

DO NOT INDUCE VOMITING. Rinse mouth with water. Never give anything by mouth to a person who is unconscious or drowsy. Get immediate medical attention by calling a Poison Control Center, or hospital emergency room. If medical advice cannot be obtained, then take the person and product to the nearest medical emergency treatment center or hospital.

First Aid: Inhalation

If symptoms of exposure develop, remove to fresh air. If breathing becomes difficult, administer oxygen. Administer artificial respiration if breathing has stopped. Seek immediate medical attention.

* * * Section 5 - Fire Fighting Measures * * *

General Fire Hazards

See Section 9 for Flammability Properties.

Highly flammable liquid and vapor. Keep away from heat and all sources of ignition including sparks, flames, lighted cigarettes and pilot lights. Containers may rupture or explode in the heat of a fire. Vapors are heavier than air and may travel to a remote ignition source and flash back. This product contains tetrahydrofuran that may form explosive organic peroxide when exposed to air or light or with age.

Hazardous Combustion Products

Combustion will produce toxic and irritating vapors including carbon monoxide, carbon dioxide and hydrogen chloride.

Extinguishing Media

Use dry chemical, CO_2, or foam to extinguish fire. Cool fire exposed container with water. Water may be ineffective as an extinguishing agent.

Unsuitable Extinguishing Media

None.

Fire Fighting Equipment/Instructions

Firefighters should wear positive pressure self-contained breathing apparatus and full protective clothing for fires in areas where chemicals are used or stored.

* * * Section 6 - Accidental Release Measures * * *

Recovery and Neutralization

Stop leak if it can be done without risk.

Materials and Methods for Clean-Up

Remove all sources of ignition and ventilate area. Soak up spill with an inert absorbent such as sand, earth or other noncombusting material. Put absorbent material in covered, labeled metal containers.

Emergency Measures

Isolate area. Keep unnecessary personnel away.

Personal Precautions and Protective Equipment

Personnel cleaning up the spill should wear appropriate personal protective equipment, including respirators if vapor concentrations are high.

Environmental Precautions

Prevent liquid from entering watercourses, sewers and natural waterways.

Prevention of Secondary Hazards

None

* * * Section 7 - Handling and Storage * * *

Handling Procedures

Avoid contact with eyes, skin and clothing. Avoid breathing vapors or mists. Use with adequate ventilation (equivalent to outdoors). Wash thoroughly after handling. Do not eat, drink or smoke in the work area. Keep product away from heat, sparks, flames and all other sources of ignition. No smoking in storage or use areas. Keep containers closed when not in use. Other: "Empty" containers retain product residue and can be hazardous. Follow all SDS precautions in handling empty containers. Do not cut or weld on or near empty or full containers.

Storage Procedures

Store in a cool, dry, well-ventilated area away from incompatible materials. Keep containers closed when not in use.

Incompatibilities

Oxidizing agents, alkalis, amines, ammonia, acids, chlorine compounds, chlorinated inorganics (potassium, calcium and sodium hypochlorite) and hydrogen peroxides. May attack plastic, resins and rubber.

* * * Section 8 - Exposure Controls / Personal Protection * * *

Component Exposure Limits

Tetrahydrofuran (109-99-9)

ACGIH: 50 ppm TWA
100 ppm STEL
Skin - potential significant contribution to overall exposure by the cutaneous route
OSHA: 200 ppm TWA; 590 mg/m3 TWA
NIOSH: 200 ppm TWA; 590 mg/m3 TWA
250 ppm STEL; 735 mg/m3 STEL

Methyl ethyl ketone (78-93-3)

ACGIH: 200 ppm TWA
300 ppm STEL
OSHA: 200 ppm TWA; 590 mg/m3 TWA
NIOSH: 200 ppm TWA; 590 mg/m3 TWA
300 ppm STEL; 885 mg/m3 STEL

Acetone (67-64-1)

ACGIH: 500 ppm TWA
750 ppm STEL
OSHA: 1000 ppm TWA; 2400 mg/m3 TWA
NIOSH: 250 ppm TWA; 590 mg/m3 TWA

Cyclohexanone (108-94-1)

ACGIH: 20 ppm TWA
50 ppm STEL
Skin - potential significant contribution to overall exposure by the cutaneous route
OSHA: 50 ppm TWA; 200 mg/m3 TWA
NIOSH: 25 ppm TWA; 100 mg/m3 TWA
Potential for dermal absorption

PVC (Chloroethylene, polymer) (9002-86-2)

ACGIH: 1 mg/m3 TWA (respirable fraction)

Engineering Measures

Open doors & windows. Provide ventilation capable of maintaining emissions at the point of use below recommended exposure limits. If used in enclosed area, use exhaust fans. Exhaust fans should be explosion-proof or set up in a way that flammable concentrations of solvent vapors are not exposed to electrical fixtures or hot surfaces.

Personal Protective Equipment: Respiratory

For operations where the exposure limit may be exceeded, a NIOSH approved organic vapor respirator or supplied air respirator is recommended. Equipment selection depends on contaminant type and concentration, select in accordance with 29 CFR 1910.134 and good industrial hygiene practice. For firefighting, use self-contained breathing apparatus.

Personal Protective Equipment: Hands

Rubber gloves are suitable for normal use of the product. For long exposures chemical resistant gloves may be required such as 4H(tm) or Silver Shield(tm) to avoid prolonged skin contact.

Personal Protective Equipment: Eyes

Safety glasses with side shields or safety goggles.

Personal Protective Equipment: Skin and Body

No additional protective equipment needed.

* * * Section 9 - Physical & Chemical Properties * * *

Appearance:	Clear	**Odor:**	Ether-like
Physical State:	Liquid	**pH:**	NA
Vapor Pressure:	145 mmHg @ 20°C	**Vapor Density:**	2.5
Boiling Point:	151°F (66°C)	**Melting Point:**	NA
Solubility (H2O):	Negligible	**Specific Gravity:**	0.90 +/- 0.02 @ 20°C
Evaporation Rate:	(BUAC = 1) = 5.5 - 8.0	**VOC:**	84-88%
Octanol/H2O Coeff.:	ND	**Flash Point:**	14-23°F (-10 to -5°C)
Flash Point Method:	CCCFP	**Upper Flammability Limit (UFL):**	11.8
Lower Flammability Limit (LFL):	1.8	**Burning Rate:**	ND
Auto Ignition:	ND		

* * * Section 10 - Chemical Stability & Reactivity Information * * *

Chemical Stability

This is a stable material.

Hazardous Reaction Potential

Will not occur.

Conditions to Avoid

Avoid heat, sparks, flames and other sources of ignition.

Incompatible Products

Oxidizing agents, alkalis, amines, ammonia, acids, chlorine compounds, chlorinated inorganics (potassium, calcium and sodium hypochlorite) and hydrogen peroxides. May attack plastic, resins and rubber.

Hazardous Decomposition Products

Combustion will produce toxic and irritating vapors including carbon monoxide, carbon dioxide and hydrogen chloride.

* * * Section 11 - Toxicological Information * * *

Acute Toxicity

Component Analysis - LD50/LC50

Tetrahydrofuran (109-99-9)
Inhalation LC50 Rat 53.9 mg/L 4 h; Inhalation LC50 Rat 180 mg/L 1 h; Oral LD50 Rat 1650 mg/kg

Methyl ethyl ketone (78-93-3)
Inhalation LC50 Mouse 32 g/m3 4 h; Oral LD50 Rat 2737 mg/kg; Dermal LD50 Rabbit 6480 mg/kg

Acetone (67-64-1)
Oral LD50 Rat 5800 mg/kg

Cyclohexanone (108-94-1)
Inhalation LC50 Rat 10.7 mg/L 4 h; Inhalation LC50 Rat 8000 ppm 4 h; Oral LD50 Rat 800 mg/kg; Dermal LD50 Rabbit 948 mg/kg

Potential Health Effects: Skin Corrosion Property/Stimulativeness

May cause irritation with redness, itching and pain. Methyl ethyl ketone and cyclohexanone may be absorbed through the skin causing effects similar to those listed under inhalation.

Potential Health Effects: Eye Critical Damage/ Stimulativeness

Vapors may cause irritation. Direct contact may cause irritation with redness, stinging and tearing of the eyes. May cause eye damage.

Potential Health Effects: Ingestion

Swallowing may cause abdominal pain, nausea, vomiting and diarrhea. Aspiration during swallowing or vomiting can cause chemical pneumonia and lung damage. May cause kidney and liver damage.

Potential Health Effects: Inhalation

Vapors or mists may cause mucous membrane and respiratory irritation, coughing, headache, dizziness, dullness, nausea, shortness of breath and vomiting. High concentrations may cause central nervous system depression, narcosis and unconsciousness. May cause kidney, liver and lung damage.

Respiratory Organs Sensitization/Skin Sensitization

This product is not reported to have any skin sensitization effects.

Generative Cell Mutagenicity

Cyclohexanone has been positive in bacterial and mammalian assays. Acetone, methyl ethyl ketone and tetrahydrofuran are generally thought not to be mutagenic.

Carcinogenicity

A: General Product Information

In 2012 USEPA Integrated Risk Information System (IRIS) reviewed a two species inhalation lifetime study on THF conducted by NTP (1998). Male rats developed renal tumors and female mice developed liver tumors while neither the female rats nor the male mice showed similar results. Because the carcinogenic mechanisms could not be identified clearly in either species for either tumor, the EPA determined that the male rat and female mouse findings are relevant to the assessment of carcinogenic potential in humans. Therefore, the IRIS review concludes that these data in aggregate indicate that there is "suggestive evidence of carcinogenic potential" following exposure to THF by all routes of exposure.

B: Component Carcinogenicity

Tetrahydrofuran (109-99-9)

ACGIH: A3 - Confirmed Animal Carcinogen with Unknown Relevance to Humans

Acetone (67-64-1)

ACGIH: A4 - Not Classifiable as a Human Carcinogen

Cyclohexanone (108-94-1)

ACGIH: A3 - Confirmed Animal Carcinogen with Unknown Relevance to Humans
IARC: Monograph 71 [1999]; Monograph 47 [1989] (Group 3 (not classifiable))

PVC (Chloroethylene, polymer) (9002-86-2)

ACGIH: A4 - Not Classifiable as a Human Carcinogen
IARC: Supplement 7 [1987]; Monograph 19 [1979] (Group 3 (not classifiable))

Reproductive Toxicity

Methyl ethyl ketone and cyclohexanone have been shown to cause embryofetal toxicity and birth defects in laboratory animals. Acetone and tetrahydrofuran has been found to cause adverse developmental effects only when exposure levels cause other toxic effects to the mother.

Specified Target Organ General Toxicity: Single Exposure

May cause respiratory irritation. Inhalation of high concentrations may cause central nervous system depression, narcosis and unconsciousness. May cause kidney, liver and lung damage.

Specified Target Organ General Toxicity: Repeated Exposure

This product is not reported to have any specific target organ toxicity repeat exposure effects.

Aspiration Respiratory Organs Hazard

Aspiration during swallowing or vomiting can cause chemical pneumonia and lung damage. May cause kidney and liver damage.

* * * Section 12 - Ecological Information * * *

Ecotoxicity

A: General Product Information

This product is not expected to be toxic to aquatic organisms.

B: Component Analysis - Ecotoxicity - Aquatic Toxicity

Tetrahydrofuran (109-99-9)

Test & Species		Conditions
96 Hr LC50 Pimephales promelas	1970-2360 mg/L [flow-through]	
96 Hr LC50 Pimephales promelas	2700-3600 mg/L [static]	
24 Hr EC50 Daphnia magna	5930 mg/L	

Methyl ethyl ketone (78-93-3)

Test & Species		Conditions
96 Hr LC50 Pimephales promelas	3130-3320 mg/L [flow-through]	
48 Hr EC50 Daphnia magna	>520 mg/L	
48 Hr EC50 Daphnia magna	5091 mg/L	
48 Hr EC50 Daphnia magna	4025 - 6440 mg/L [Static]	

Acetone (67-64-1)

Test & Species		Conditions
96 Hr LC50 Oncorhynchus mykiss	4.74 - 6.33 mL/L	
96 Hr LC50 Pimephales promelas	6210 - 8120 mg/L [static]	
96 Hr LC50 Lepomis macrochirus	8300 mg/L	
48 Hr EC50 Daphnia magna	10294 - 17704 mg/L [Static]	
48 Hr EC50 Daphnia magna	12600 - 12700 mg/L	

Cyclohexanone (108-94-1)

Test & Species		Conditions
96 Hr LC50 Pimephales promelas	481-578 mg/L [flow-through]	
96 Hr LC50 Pimephales promelas	8.9 mg/L	
96 Hr EC50 Chlorella vulgaris	20 mg/L	
24 Hr EC50 Daphnia magna	800 mg/L	

Persistence/Degradability

No information available for the product.

Bioaccumulation

No information available for the product.

Mobility in Soil

No information available for the product.

* * * Section 13 - Disposal Considerations * * *

Waste Disposal Instructions

See Section 7 for Handling Procedures. See Section 8 for Personal Protective Equipment recommendations.

Disposal of Contaminated Containers or Packaging

Dispose of contents/container in accordance with local/regional/national/international regulations.

* * * Section 14 - Transportation Information * * *

DOT Information

For Greater than 1 liter (0.3 gal):
Shipping Name: Adhesives
UN #: 1133 **Hazard Class:** 3 **Packing Group:** II
Required Label(s): Flammable Liquid

For Less than 1 liter (0.3 gal):
Shipping Name: Consumer Commodity, ORM-D

IMDG Information

For Greater than 1 liter (0.3 gal):
Shipping Name: Adhesives
UN #: 1133 **Hazard Class:** 3 **Packing Group:** II
Required Label(s): Flammable Liquid

For Less than 1 liter (0.3 gal):
Shipping Name: Adhesives
UN #: 1133 **Hazard Class:** 3 **Packing Group:** II
Required Label(s): None (Limited Quantities are expected from labeling)

* * * Section 15 - Regulatory Information * * *

Regulatory Information

US Federal Regulations

Component Analysis

This material contains one or more of the following chemicals required to be identified under SARA Section 302 (40 CFR 355 Appendix A), SARA Section 313 (40 CFR 372.65) and/or CERCLA (40 CFR 302.4).

Tetrahydrofuran (109-99-9)

CERCLA: 1000 lb final RQ; 454 kg final RQ

Methyl ethyl ketone (78-93-3)

CERCLA: 5000 lb final RQ; 2270 kg final RQ

Acetone (67-64-1)

CERCLA: 5000 lb final RQ; 2270 kg final RQ

Cyclohexanone (108-94-1)

CERCLA: 5000 lb final RQ; 2270 kg final RQ

State Regulations

Component Analysis - State

The following components appear on one or more of the following state hazardous substances lists:

Component	CAS	CA	MA	MN	NJ	PA	RI
Tetrahydrofuran	109-99-9	Yes	Yes	Yes	Yes	Yes	No
Methyl ethyl ketone	78-93-3	Yes	Yes	Yes	Yes	Yes	No
Acetone	67-64-1	Yes	Yes	Yes	Yes	Yes	No
Cyclohexanone	108-94-1	Yes	Yes	Yes	Yes	Yes	No
PVC (Chloroethylene, polymer)	9002-86-2	No	No	No	Yes	No	No

Component Analysis - WHMIS IDL

The following components are identified under the Canadian Hazardous Products Act Ingredient Disclosure List:

Component	CAS #	Minimum Concentration
Tetrahydrofuran	109-99-9	1 %
Methyl ethyl ketone	78-93-3	1 %
Acetone	67-64-1	1 %
Cyclohexanone	108-94-1	0.1 %

Additional Regulatory Information

A: General Product Information

This product contains trace amounts of chemicals known to the State of California to cause cancer. Under normal use conditions, exposure to these chemicals at levels above the State of California "No Significant Risk Level" (NSRL) are unlikely. The use of proper personal protective equipment (PPE) and ventilation guidelines noted in Section 8 will minimize exposure to these chemicals.

B: Component Analysis - Inventory

Component	CAS #	TSCA	CAN	EEC
Tetrahydrofuran	109-99-9	Yes	DSL	EINECS
Methyl ethyl ketone	78-93-3	Yes	DSL	EINECS
Acetone	67-64-1	Yes	DSL	EINECS
Cyclohexanone	108-94-1	Yes	DSL	EINECS
PVC (Chloroethylene, polymer)	9002-86-2	Yes	DSL	ELINCS

* * * Section 16 - Other Information * * *

Key/Legend

EPA = Environmental Protection Agency; TSCA = Toxic Substance Control Act; ACGIH = American Conference of Governmental Industrial Hygienists; IARC = International Agency for Research on Cancer; NIOSH = National Institute for Occupational Safety and Health; NTP = National Toxicology Program; OSHA = Occupational Safety and Health Administration., NJTSR = New Jersey Trade Secret Registry.

Literature References

None

Other Information

NFPA and HMIS:
NFPA Hazard Signal: Health: 2 Flammability: 3 Reactivity: 1 Special: None
HMIS Hazard Signal: Health: 2* Flammability: 3 Reactivity: 1 PPE: G

Disclaimer:
The information herein has been compiled from sources believed to be reliable, up-to-date, and is accurate to the best of our knowledge. However, we cannot give any guarantees regarding information from other sources, and expressly do not make warranties, nor assume any liability for its use.

End of Sheet

Material Name: OATEY PURPLE PRIMER/CLEANER

* * * Section 1 - Product and Company Identification * * *

MSDS #1401E

Part Numbers: 30768, 30780, 30783, 30796, 30806, 31966, 31967, 31968, 31969

Manufacturer Information

Oatey Co.
4700 West 160th Street
Cleveland, OH 44135

Phone: 216-267-7100

For Emergency First Aid call 1-877-740-5015. For chemical transportation emergencies ONLY, call Chemtrec at 1-800-424-9300. Outside the U.S. 1- 703-527-3887.

* * * Section 2 - Hazards Identification * * *

GHS Classification:

Flammable Liquids - Category 2
Acute Toxicity Oral - Category 4
Acute Toxicity Dermal - Category 4
Acute Toxicity Inhalation - Category 4
Eye Damage/Irritation - Category 2A
Carcinogenicity - Category 2
Specific Target Organ Toxicity Single Exposure - Category 3

GHS LABEL ELEMENTS

Symbol(s)

Signal Word

Danger

Hazard Statements

Highly flammable liquid and vapor.
Harmful if swallowed.
Harmful in contact with skin.
Harmful if inhaled.
Causes serious eye irritation.
Contains a chemical classified by the US EPA as a suspected possible carcinogen.
May cause respiratory irritation.
May cause drowsiness or dizziness.

Precautionary Statements

Prevention

Keep away from heat/sparks/open flames and hot surfaces. - No smoking.

Keep container tightly closed.
Use explosion-proof electrical/ventilating/lighting/equipment.
Use only non-sparking tools.
Take precautionary measures against static discharge.
Wear protective gloves/eye protection/face protection.
Wash thoroughly after handling.
Do not eat, drink or smoke when using this product.
Obtain special instructions before use.
Do not handle until all safety precautions have been read and understood.
Avoid breathing fume/gas/mist/vapors.
Use only outdoors or in a well-ventilated area.

Response

If on skin (or hair): Remove/Take off immediately all contaminated clothing. Rinse skin with water/shower. Wash contaminated clothing before reuse.
If swallowed: Call a poison center or doctor/physician if you feel unwell. Rinse mouth. Do not induce vomiting.
If inhaled: Remove victim to fresh air and keep at rest in a position comfortable for breathing. Call a poison center or doctor/physician if you feel unwell.
If in eyes: Rinse cautiously with water for several minutes. Remove contact lenses, if present and easy to do. Continue rinsing. Immediately call a poison center or doctor/physician.
If exposed or concerned: Get medical advice/attention.
In case of fire: Use dry chemical, CO_2, or foam to extinguish fire.

Storage

Store in a well-ventilated place. Keep cool.
Store locked up.

Disposal

Dispose of contents/container in accordance with local/regional/national/international regulations.

* * * Section 3 - Composition / Information on Ingredients * * *

CAS #	Component	Percent
67-64-1	Acetone	60-90
78-93-3	Methyl ethyl ketone	10-20
108-94-1	Cyclohexanone	3-10
109-99-9	Tetrahydrofuran	0-10

* * * Section 4 - First Aid Measures * * *

First Aid: Eyes

If material gets into eyes or if fumes cause irritation, immediately flush eyes with plenty of water until chemical is removed. If irritation persists, get medical attention immediately.

First Aid: Skin

Remove contaminated clothing immediately. Wash all exposed areas with soap and water. Get medical attention if irritation develops. Remove dried cement with hand cleaner or baby oil.

First Aid: Ingestion

DO NOT INDUCE VOMITING. Rinse mouth with water. Never give anything by mouth to a person who is unconscious or drowsy. Get immediate medical attention by calling a Poison Control Center, or hospital emergency room. If medical advice cannot be obtained, then take the person and product to the nearest medical emergency treatment center or hospital.

First Aid: Inhalation

If symptoms of exposure develop, remove to fresh air. If breathing becomes difficult, administer oxygen. Administer artificial respiration if breathing has stopped. Seek immediate medical attention.

* * * Section 5 - Fire Fighting Measures * * *

General Fire Hazards

See Section 9 for Flammability Properties.

Highly flammable liquid and vapor. Keep away from heat and all sources of ignition including sparks, flames, lighted cigarettes and pilot lights. Containers may rupture or explode in the heat of a fire. Vapors are heavier than air and may travel to a remote ignition source and flash back. This product contains tetrahydrofuran that may form explosive organic peroxide when exposed to air or light or with age.

Hazardous Combustion Products

Combustion will produce toxic and irritating vapors including carbon monoxide, carbon dioxide and hydrogen chloride.

Extinguishing Media

Use dry chemical, CO2, or foam to extinguish fire. Cool fire exposed container with water. Water may be ineffective as an extinguishing agent.

Unsuitable Extinguishing Media

None.

Fire Fighting Equipment/Instructions

Firefighters should wear positive pressure self-contained breathing apparatus and full protective clothing for fires in areas where chemicals are used or stored.

* * * Section 6 - Accidental Release Measures * * *

Recovery and Neutralization

Stop leak if it can be done without risk.

Materials and Methods for Clean-Up

Remove all sources of ignition and ventilate area. Soak up spill with an inert absorbent such as sand, earth or other noncombusting material. Put absorbent material in covered, labeled metal containers.

Emergency Measures

Isolate area. Keep unnecessary personnel away.

Personal Precautions and Protective Equipment

Personnel cleaning up the spill should wear appropriate personal protective equipment, including respirators if vapor concentrations are high.

Environmental Precautions

Prevent liquid from entering watercourses, sewers and natural waterways.

Prevention of Secondary Hazards

None

* * * Section 7 - Handling and Storage * * *

Handling Procedures

Avoid contact with eyes, skin and clothing. Avoid breathing vapors or mists. Use with adequate ventilation (equivalent to outdoors). Wash thoroughly after handling. Do not eat, drink or smoke in the work area. Keep product away from heat, sparks, flames and all other sources of ignition. No smoking in storage or use areas. Keep containers closed when not in use. "Empty" containers retain product residue and can be hazardous. Follow all SDS precautions in handling empty containers. Do not cut or weld on or near empty or full containers.

Storage Procedures

Store in a cool, dry, well-ventilated area away from incompatible materials. Keep containers closed when not in use.

Incompatibilities

Oxidizing agents, alkalis, amines, ammonia, acids, chlorine compounds, chlorinated inorganics (potassium, calcium and sodium hypochlorite) and hydrogen peroxides. May attack plastic, resins and rubber.

* * * Section 8 - Exposure Controls / Personal Protection * * *

Component Exposure Limits

Acetone (67-64-1)

ACGIH: 500 ppm TWA
750 ppm STEL
OSHA: 1000 ppm TWA; 2400 mg/m3 TWA
NIOSH: 250 ppm TWA; 590 mg/m3 TWA

Methyl ethyl ketone (78-93-3)

ACGIH: 200 ppm TWA
300 ppm STEL
OSHA: 200 ppm TWA; 590 mg/m3 TWA
NIOSH: 200 ppm TWA; 590 mg/m3 TWA
300 ppm STEL; 885 mg/m3 STEL

Cyclohexanone (108-94-1)

ACGIH: 20 ppm TWA
50 ppm STEL
Skin - potential significant contribution to overall exposure by the cutaneous route
OSHA: 50 ppm TWA; 200 mg/m3 TWA
NIOSH: 25 ppm TWA; 100 mg/m3 TWA
Potential for dermal absorption

Tetrahydrofuran (109-99-9)

ACGIH: 50 ppm TWA
100 ppm STEL
Skin - potential significant contribution to overall exposure by the cutaneous route
OSHA: 200 ppm TWA; 590 mg/m3 TWA
NIOSH: 200 ppm TWA; 590 mg/m3 TWA
250 ppm STEL; 735 mg/m3 STEL

Engineering Measures

Open doors & windows. Provide ventilation capable of maintaining emissions at the point of use below recommended exposure limits. If used in enclosed area, use exhaust fans. Exhaust fans should be explosion-proof or set up in a way that flammable concentrations of solvent vapors are not exposed to electrical fixtures or hot surfaces.

Personal Protective Equipment: Respiratory

For operations where the exposure limit may be exceeded, a NIOSH approved organic vapor respirator or supplied air respirator is recommended. Equipment selection depends on contaminant type and concentration, select in accordance with 29 CFR 1910.134 and good industrial hygiene practice. For firefighting, use self-contained breathing apparatus.

Personal Protective Equipment: Hands

Rubber gloves are suitable for normal use of the product. For long exposures chemical resistant gloves may be required such as 4H(tm) or Silver Shield(tm) to avoid prolonged skin contact.

Personal Protective Equipment: Eyes

Safety glasses with side shields or safety goggles.

Personal Protective Equipment: Skin and Body

No additional protective equipment needed.

* * * Section 9 - Physical & Chemical Properties * * *

Appearance:	Purple	**Odor:**	Ether-like
Physical State:	Liquid	**pH:**	NA
Vapor Pressure:	145 mmHg @ 20°C	**Vapor Density:**	2.5
Boiling Point:	151°F (66°C)	**Melting Point:**	NA
Solubility (H2O):	Negligible	**Specific Gravity:**	0.81 +/- 0.02 @ 20°C
Evaporation Rate:	(BUAC = 1) = 5.5 - 8.0	**VOC:**	99.96%
Octanol/H2O Coeff.:	ND	**Flash Point:**	14-23°F (-10 to -5°C)
Flash Point Method:	CCCFP	**Upper Flammability Limit (UFL):**	11.8
Lower Flammability Limit (LFL):	1.8	**Burning Rate:**	ND
Auto Ignition:	ND		

* * * Section 10 - Chemical Stability & Reactivity Information * * *

Chemical Stability

This is a stable material.

Hazardous Reaction Potential

Will not occur.

Conditions to Avoid

Avoid heat, sparks, flames and other sources of ignition.

Incompatible Products

Oxidizing agents, alkalis, amines, ammonia, acids, chlorine compounds, chlorinated inorganics (potassium, calcium and sodium hypochlorite) and hydrogen peroxides. May attack plastic, resins and rubber.

Hazardous Decomposition Products

Combustion will produce toxic and irritating vapors including carbon monoxide, carbon dioxide and hydrogen chloride.

* * * Section 11 - Toxicological Information * * *

Acute Toxicity

Component Analysis - LD50/LC50

Acetone (67-64-1)
Oral LD50 Rat 5800 mg/kg

Methyl ethyl ketone (78-93-3)
Inhalation LC50 Mouse 32 g/m3 4 h; Oral LD50 Rat 2737 mg/kg; Dermal LD50 Rabbit 6480 mg/kg

Cyclohexanone (108-94-1)
Inhalation LC50 Rat 10.7 mg/L 4 h; Inhalation LC50 Rat 8000 ppm 4 h; Oral LD50 Rat 800 mg/kg; Dermal LD50 Rabbit 948 mg/kg

Tetrahydrofuran (109-99-9)
Inhalation LC50 Rat 53.9 mg/L 4 h; Inhalation LC50 Rat 180 mg/L 1 h; Oral LD50 Rat 1650 mg/kg

Potential Health Effects: Skin Corrosion Property/Stimulativeness

May cause irritation with redness, itching and pain. Methyl ethyl ketone and cyclohexanone may be absorbed through the skin causing effects similar to those listed under inhalation.

Potential Health Effects: Eye Critical Damage/ Stimulativeness

Vapors may cause irritation. Direct contact may cause irritation with redness, stinging and tearing of the eyes. May cause eye damage.

Potential Health Effects: Ingestion

Swallowing may cause abdominal pain, nausea, vomiting and diarrhea. Aspiration during swallowing or vomiting can cause chemical pneumonia and lung damage. May cause kidney and liver damage.

Potential Health Effects: Inhalation

Vapors or mists may cause mucous membrane and respiratory irritation, coughing, headache, dizziness, dullness, nausea, shortness of breath and vomiting. High concentrations may cause central nervous system depression, narcosis and unconsciousness. May cause kidney, liver and lung damage.

Respiratory Organs Sensitization/Skin Sensitization

This product is not reported to have any skin sensitization effects.

Generative Cell Mutagenicity

Cyclohexanone has been positive in bacterial and mammalian assays. Acetone, methyl ethyl ketone and tetrahydrofuran are generally thought not to be mutagenic.

Carcinogenicity

A: General Product Information

In 2012 USEPA Integrated Risk Information System (IRIS) reviewed a two species inhalation lifetime study on THF conducted by NTP (1998). Male rats developed renal tumors and female mice developed liver tumors while neither the female rats nor the male mice showed similar results. Because the carcinogenic mechanisms could not be identified clearly in either species for either tumor, the EPA determined that the male rat and female mouse findings are relevant to the assessment of carcinogenic potential in humans. Therefore, the IRIS review concludes that these data in aggregate indicate that there is "suggestive evidence of carcinogenic potential" following exposure to THF by all routes of exposure.

B: Component Carcinogenicity

Acetone (67-64-1)

ACGIH: A4 - Not Classifiable as a Human Carcinogen

Cyclohexanone (108-94-1)

ACGIH: A3 - Confirmed Animal Carcinogen with Unknown Relevance to Humans
IARC: Monograph 71 [1999]; Monograph 47 [1989] (Group 3 (not classifiable))

Tetrahydrofuran (109-99-9)

ACGIH: A3 - Confirmed Animal Carcinogen with Unknown Relevance to Humans

Reproductive Toxicity

Methyl ethyl ketone and cyclohexanone have been shown to cause embryofetal toxicity and birth defects in laboratory animals. Acetone and tetrahydrofuran has been found to cause adverse developmental effects only when exposure levels cause other toxic effects to the mother.

Specified Target Organ General Toxicity: Single Exposure

May cause respiratory irritation. Inhalation of high concentrations may cause central nervous system depression, narcosis and unconsciousness. May cause kidney, liver and lung damage.

Specified Target Organ General Toxicity: Repeated Exposure

This product is not reported to have any specific target organ toxicity repeat exposure effects.

Aspiration Respiratory Organs Hazard

Aspiration during swallowing or vomiting can cause chemical pneumonia and lung damage. May cause kidney and liver damage.

* * * Section 12 - Ecological Information * * *

Ecotoxicity

A: General Product Information

This product is not expected to be toxic to aquatic organisms.

B: Component Analysis - Ecotoxicity - Aquatic Toxicity

Acetone (67-64-1)

Test & Species		Conditions
96 Hr LC50 Oncorhynchus mykiss	4.74 - 6.33 mL/L	
96 Hr LC50 Pimephales promelas	6210 - 8120 mg/L [static]	
96 Hr LC50 Lepomis macrochirus	8300 mg/L	
48 Hr EC50 Daphnia magna	10294 - 17704 mg/L [Static]	
48 Hr EC50 Daphnia magna	12600 - 12700 mg/L	

Methyl ethyl ketone (78-93-3)

Test & Species		Conditions
96 Hr LC50 Pimephales promelas	3130-3320 mg/L [flow-through]	
48 Hr EC50 Daphnia magna	>520 mg/L	
48 Hr EC50 Daphnia magna	5091 mg/L	
48 Hr EC50 Daphnia magna	4025 - 6440 mg/L [Static]	

Cyclohexanone (108-94-1)

Test & Species		Conditions
96 Hr LC50 Pimephales promelas	481-578 mg/L [flow-through]	
96 Hr LC50 Pimephales promelas	8.9 mg/L	
96 Hr EC50 Chlorella vulgaris	20 mg/L	
24 Hr EC50 Daphnia magna	800 mg/L	

Tetrahydrofuran (109-99-9)

Test & Species		Conditions
96 Hr LC50 Pimephales promelas	1970-2360 mg/L [flow-through]	
96 Hr LC50 Pimephales promelas	2700-3600 mg/L [static]	
24 Hr EC50 Daphnia magna	5930 mg/L	

Persistence/Degradability

No information available for the product.

Bioaccumulation

No information available for the product.

Mobility in Soil

No information available for the product.

* * * Section 13 - Disposal Considerations * * *

Waste Disposal Instructions

See Section 7 for Handling Procedures. See Section 8 for Personal Protective Equipment recommendations.

Disposal of Contaminated Containers or Packaging

Dispose of contents/container in accordance with local/regional/national/international regulations.

* * * Section 14 - Transportation Information * * *

DOT Information

For Greater than 1 liter (0.3 gal):
Shipping Name: Flammable Liquid, n.o.s (Methyl Ethyl Ketone, Acetone)
UN #: 1993 **Hazard Class:** 3 **Packing Group:** II
Required Label(s): Flammable Liquid

For Less than 1 liter (0.3 gal):
Shipping Name: Consumer Commodity, ORM-D

IMDG Information

For Greater than 1 liter (0.3 gal):
Shipping Name: Flammable Liquid, n.o.s (Methyl Ethyl Ketone, Acetone)
UN #: 1993 **Hazard Class:** 3 **Packing Group:** II
Required Label(s): Flammable Liquid

For Less than 1 liter (0.3 gal):
Shipping Name: Flammable Liquid, n.o.s (Limited Quantity)
UN #: 1993 **Hazard Class:** 3 **Packing Group:** II

Required Label(s): None (Limited Quantities are expected from labeling)

* * * Section 15 - Regulatory Information * * *

Regulatory Information

US Federal Regulations

Component Analysis

This material contains one or more of the following chemicals required to be identified under SARA Section 302 (40 CFR 355 Appendix A), SARA Section 313 (40 CFR 372.65) and/or CERCLA (40 CFR 302.4).

Acetone (67-64-1)

CERCLA: 5000 lb final RQ; 2270 kg final RQ

Methyl ethyl ketone (78-93-3)

CERCLA: 5000 lb final RQ; 2270 kg final RQ

Cyclohexanone (108-94-1)

CERCLA: 5000 lb final RQ; 2270 kg final RQ

Tetrahydrofuran (109-99-9)

CERCLA: 1000 lb final RQ; 454 kg final RQ

State Regulations

Component Analysis - State

The following components appear on one or more of the following state hazardous substances lists:

Component	CAS	CA	MA	MN	NJ	PA	RI
Acetone	67-64-1	Yes	Yes	Yes	Yes	Yes	No
Methyl ethyl ketone	78-93-3	Yes	Yes	Yes	Yes	Yes	No
Cyclohexanone	108-94-1	Yes	Yes	Yes	Yes	Yes	No
Tetrahydrofuran	109-99-9	Yes	Yes	Yes	Yes	Yes	No

Component Analysis - WHMIS IDL

The following components are identified under the Canadian Hazardous Products Act Ingredient Disclosure List:

Component	CAS #	Minimum Concentration
Acetone	67-64-1	1 %
Methyl ethyl ketone	78-93-3	1 %
Cyclohexanone	108-94-1	0.1 %
Tetrahydrofuran	109-99-9	1 %

Additional Regulatory Information

A: General Product Information

This product contains trace amounts of chemicals known to the State of California to cause cancer. Under normal use conditions, exposure to these chemicals at levels above the State of California "No Significant Risk Level" (NSRL) are unlikely. The use of proper personal protective equipment (PPE) and ventilation guidelines noted in Section 8 will minimize exposure to these chemicals.

B: Component Analysis - Inventory

Component	CAS #	TSCA	CAN	EEC
Acetone	67-64-1	Yes	DSL	EINECS
Methyl ethyl ketone	78-93-3	Yes	DSL	EINECS
Cyclohexanone	108-94-1	Yes	DSL	EINECS
Tetrahydrofuran	109-99-9	Yes	DSL	EINECS

* * * Section 16 - Other Information * * *

Key/Legend

EPA = Environmental Protection Agency; TSCA = Toxic Substance Control Act; ACGIH = American Conference of Governmental Industrial Hygienists; IARC = International Agency for Research on Cancer; NIOSH = National Institute for Occupational Safety and Health; NTP = National Toxicology Program; OSHA = Occupational Safety and Health Administration., NJTSR = New Jersey Trade Secret Registry.

Literature References

None

Other Information

NFPA and HMIS:
NFPA Hazard Signal: Health: 2 Flammability: 3 Reactivity: 1 Special: None
HMIS Hazard Signal: Health: 2* Flammability: 3 Reactivity: 1 PPE: G

Disclaimer:
The information herein has been compiled from sources believed to be reliable, up-to-date, and is accurate to the best of our knowledge. However, we cannot give any guarantees regarding information from other sources, and expressly do not make warranties, nor assume any liability for its use.

End of Sheet

MATERIAL SAFETY DATA SHEET

JCI Jones Chemicals, Inc. Sunny Sol® 150

SECTION I - IDENTIFICATION

TRADE NAME:	Sunny Sol® 150
CHEMICAL NAME:	Sodium Hypochlorite
FORMULA:	NaOCl
DOT SHIPPING NAME:	Hypochlorite Solutions
DOT HAZARD CLASS:	8
UN/NA NUMBER:	UN 1791
DOT LABEL:	Corrosive
DOT PLACARD:	Corrosive
PACKING GROUP:	III
REPORTABLE QUANTITY:	Sodium Hypochlorite: 100 Pounds/45.4 Kilograms
CAS NUMBER:	7681-52-9
NFPA DESIGNATION:	The NFPA has not rated sodium hypochlorite.

SECTION II - HAZARDOUS INGREDIENTS

MATERIAL	% BY WEIGHT	CAS NO.	OSHA PEL	ACGIH TLV
Sodium Hypochlorite	12.5-15.6	7681-52-9	Not Applicable	Not Applicable
Sodium Hydroxide	0.1-2.0	1310-73-2	2mg/m^3 ceiling	STEL/CEIL(c) 2mg/m^3 ceiling
Inert Ingredients	Balance	Not Applicable	Not Applicable	Not Applicable

CARCINOGENICITY STATUS: NTP - No, IARC - No, OSHA - No.

SECTION III - PHYSICAL DATA

APPEARANCE:	Yellow-green liquid
BOILING POINT:	219°F (104°C) for 12.5% NaOCl by wt.
FREEZING POINT:	- 11°F (- 24°C) for 12.5% NaOCl by wt.
ODOR:	Chlorine
pH:	12.5 - 13.5 s.u. @ 25°C
VISCOSITY (Cs):	2.15 @ 23°C for 12.5% NaOCl by wt.
% VOLATILE BY VOLUME:	Variable water plus products of decomposition
SOLUBILITY IN WATER:	Complete
SPECIFIC GRAVITY (Water=1):	1.196 @ 20°C for 12.5% NaOCl by wt.
VAPOR DENSITY (AIR=1):	Not available
VAPOR PRESSURE (mm Hg):	Variable water plus products of decomposition .

SECTION IV - FIRE AND EXPLOSION DATA

FLASH POINT (Test method): Not applicable
AUTO IGNITION TEMPERATURE: Not applicable
FLAMMABLE LIMITS IN AIR (Volume %): Not applicable
EXTINGUISHING MEDIA: Flood with water or carbon dioxide (CO_2)
SPECIAL FIRE FIGHTING PROCEDURES: Use National Institute of Occupational Safety & Health (NIOSH) approved respirator with acid type canister or use self-contained breathing apparatus. Unusual fire and explosion hazards: material is a strong oxidizer. Contact with combustibles may initiate or promote combustion. Acid and heat accelerate decomposition. Decomposition products may include chlorine.

SECTION V - HEALTH HAZARD INFORMATION

MEDICAL CONDITIONS AGGRAVATED BY EXPOSURE
No medical conditions are known to be aggravated by exposure.

ROUTES OF EXPOSURE

- INHALATION: Fumes from spills can cause severe irritation and chemical burns to the nose, throat, and lungs. Very little hazard from properly stored solution.
- SKIN CONTACT: Severe irritant, reddening of skin, can cause chemical burns to skin.
- SKIN ABSORPTION: Same as skin contact.
- EYE CONTACT: Severe irritant, corrosive, can severely burn eyes.
- INGESTION: Causes irritation of membranes of the mouth, throat, and stomach pain and possible ulceration. LD50 (oral, rat) for 12.5% NaOCl is approximately 5 g/kg body weight.

EFFECTS OF OVEREXPOSURE

ACUTE OVEREXPOSURE (see Routes of Exposure above)

- SWALLOWING: See "ingestion" under routes of exposure.
- SKIN CONTACT: severe Irritant, reddening of skin, skin damage, chemical burns.
- INHALATION: Fumes from spills are very irritating to mucous membranes.
- EYE CONTACT: Extreme irritant, corrosive.

CHRONIC OVEREXPOSURE (see Routes of Exposure above)

- EYE: Can cause damage.
- SKIN: Can cause damage, chemical burns.

EMERGENCY AND FIRST AID PROCEDURES

IF ON SKIN OR CLOTHING: Take off contaminated clothing; rinse skin immediately with plenty of water for 15-20 minutes; call a poison control center or doctor for treatment advice.

IF IN EYES: Hold eye open and rinse slowly and gently with water for 15-20 minutes; remove contact lenses, if present, after the first 5 minutes, then continue rinsing eye; call a poison control center or doctor for treatment advice.

IF SWALLOWED: Call poison control center or doctor immediately for treatment advice; have person sip a glass of water if able to swallow; do not induce vomiting unless told to do so by the poison control center or doctor; do not give anything by mouth to an unconscious person.

IF INHALED: Move person to fresh air; if person is not breathing, call 911 or an ambulance, then give artificial respiration, preferably by mouth-to-mouth, if possible; call a poison control center or doctor for further treatment advice. Have the product container or label with you when calling a poison control center or doctor, or going for treatment.

SECTION VI - REACTIVITY DATA

CONDITIONS CONTRIBUTING TO INSTABILITY
Solutions are fairly stable in concentrations below 10%. Stability decreases with concentration, heat, light, exposure, decrease in pH, and contamination with heavy metals, such as nickel, cobalt, copper, and iron.

INCOMPATIBILITY
Acids, alcohols, amines, ammonia, chlorinated isocyanurates, combustibles, cyanides, detergents, ethers, hydrocarbons, oxidizable materials, reducing agents. Corrosive to most metals.

DECOMPOSITION PRODUCTS
Hypochlorous Acid (HOCl), chlorine, hydrochloric acid. Composition depends upon temperature and decrease in pH. Additional decomposition products, which depend upon pH, temperature and time, are sodium chloride, sodium chlorate and oxygen.

CONDITIONS CONTRIBUTING TO HAZARDOUS POLYMERIZATION
Will not occur.

SECTION VII - SPILL OR LEAK PROCEDURES

IN THE EVENT OF A TRANSPORTATION EMERGENCY, CALL CHEMTREC: (800) 424-9300

STEPS TO BE TAKEN IF MATERIAL IS RELEASED OR SPILLED
Cleanup personnel must wear proper protective equipment (See Section VIII). Contain in diked area. Neutralize with sodium bisulfite or ferrous salt solutions. Place neutralized material in DOT specification approved container(s). Flush area with large amounts of water. Comply with all Federal, State and Local reporting requirements.

WASTE DISPOSAL
Contact Federal, State, County, and Local environmental regulators for guidance regarding proper disposal.

SECTION VIII - SPECIAL PROTECTION INFORMATION

VENTILATION REQUIREMENTS: Local exhaust is recommended.

SPECIFIC PERSONAL PROTECTIVE EQUIPMENT

- RESPIRATORY: Use National Institute of Occupational Safety and Health (NIOSH) or Mine Safety and Health Administration (MSHA) approved respirator appropriate for this product when permissible exposure limits are exceeded.
- EYES: Use chemical goggles and face shield with chin guard.
- GLOVES: Use chemical resistant rubber, plastic, or neoprene gloves.
- OTHER: Use chemical resistant splash apron and boots. Safety shower and eye wash fountain should be located nearby.

SECTION IX - SPECIAL PRECAUTIONS

PRECAUTIONS TO BE TAKEN IN HANDLING
DANGER: This product is corrosive and may cause severe skin irritation or chemical burns to broken skin. Causes eye damage. Do not get in eyes, on skin or on clothing. Wear goggles and face shield and chemical resistant gloves when handling this product. Wash after handling. Avoid breathing vapors. Vacate poorly ventilated areas as soon as possible. Do not return until odors have dissipated.

PROPER STORAGE AND DISPOSAL REQUIREMENTS
Store this product in a cool, dry area away from direct sunlight and heat to avoid deterioration. In case of spill, flood areas with large quantities of water.

Disposal for domestic use: Do not reuse container. Rinse thoroughly before discarding in trash. Disposal for all other uses: Triple rinse (or equivalent). Then offer for recycling or reconditioning, or puncture and dispose of in a sanitary landfill, or incineration, or, if allowed by state and local authorities, by burning. If burned, stay out of smoke.

Do not contaminate water, food, or feed by storage, disposal or cleaning of equipment.

Store in an upright position!!!

OTHER PRECAUTIONS

STRONG OXIDIZING AGENT: Mix only with water according to label directions. Mixing this product with gross filth such as feces, urine, etc., or with ammonia, acids, detergents or other chemicals may release hazardous gases irritating to eyes, lungs and mucous membranes.

SECTION X – REGULATORY STATUS INFORMATION

- This product is listed in the Toxic Substances Control Act (TSCA) Inventory Of Chemical Substances.
- USEPA Pesticide Registration Number: 1744-20001
- Certified in Accordance with ANSI/NSF Standard 60 (Drinking Water Treatment Additives). Maximum Use Level: 80 mg/L
- Manufactured in Accordance with AWWA Standard for Hypochlorites, AWWA B300-04.
- USDA Authorized Uses: 3D, B1, D2, L1, Q4
- SARA Title III Extremely Hazardous Substance: No
- SARA Title III Toxic Chemical: No
- DOT Shipping Description: UN 1791, Hypochlorite Solutions, 8, PG III

MSDS PREPARED BY: JCI Jones Chemicals, Inc.
100 Sunny Sol Blvd.
Caledonia, NY 14423
Phone: (585) 538-2314

ISSUE DATE: 12/11/08
SUPERSEDES ISSUE DATED: 11/26/02

The information herein is given in good faith but no warranty, expressed or implied is made.

Sodium Sulfite

Sodium Sulfite

Material Safety Data Sheet

Chemical: Sodium Sulfite

NFPA: H=2 F=0 I= 1 S=None
HMIS: H=2 F=0 R=1 PPE= Supplied by user; dependent on conditions

MSDS Number: sodsulf-1003
Effective Date: 6 October 2003
Issued by: Solvay Chemicals, Inc. Regulatory Affairs Department

Not valid three years after effective date or after issuance of superseding MSDS, whichever is earlier. French or Spanish translations of this MSDS may be available. Check www.solvaychemicals.us or call Solvay Chemicals, Inc. to verify the latest version or translation availability.

Material Safety Data Sheets contain country specific regulatory information. Therefore, the MSDS's provided are for use only by customers of Solvay Chemicals, Inc. in North America. If you are located in a country other than Canada, Mexico or the United States, please contact the Solvay Group company in your country for MSDS information applicable to your location.

1. Company and Product Identification

1.1 Product Name: Sodium Sulfite, Anhydrous
Chemical Name: Inorganic sodium compounds
Synonyms: Anhydrous sodium sulfite
Chemical Formula: Na_2SO_3
Molecular Weight: 126.04
CAS Number: 7757-83-7
EINECS Number: 231-821-4
Grade/Trade Names: industrial grade, technical grade, food grade, photographic grade

1.2 Recommended Uses: Pulp and paper, photography, food preservatives, boiler water treatment, dechlorination, reducing agent, dyes, bleaching.

1.3 Supplier: Solvay Chemicals, Inc.
PO BOX 27328 Houston, TX 77227-7328
3333 Richmond Ave. Houston, Texas 77098

1.4 Emergency Telephone Numbers
Emergencies (USA): 1-800-424-9300 (CHEMTREC®)
Transportation Emergencies (INTERNATIONAL/MARITIME): 1-703-527-3887 (CHEMTREC®)
Transportation Emergencies (CANADA): 1-613-996-6666 (CANUTEC)
Transportation Emergencies (MEXICO-SETIQ): 01-800-00-214-00 (MEX. REPUBLIC)
525-559-1588 (Mexico City and metro area)

Responsible Care®
Good Chemistry at Work

Solvay Chemicals

SOLVAY

Interox, Fluorides & Minerals

Sodium Sulfite

Material Safety Data Sheet

2. Composition/Information on Ingredients

INGREDIENTS	FORMULA	WT. PERCENT	CAS #
Sodium Sulfite	Na_2SO_3	99	7757-83-7
Sodium Sulfate	Na_2SO_4	1	7757-82-6

3. Hazards Identification

Emergency Overview: Sulfite-sensitive individuals may experience a severe allergic reaction.

3.1 Route of Entry: Inhalation: Yes Skin: Yes Ingestion: Yes

3.2 Potential Effects of exposure: May cause irritation.

Inhalation (dust): May cause mild irritation.

Eyes (dust): May cause mild irritation.

Skin contact: May cause mild irritation with prolonged exposure.

Ingestion: Oral exposure or swallowing may produce gastrointestinal upset, nausea or vomiting. Ingestion may be fatal. Sulfite sensitive individuals may experience a severe allergic reaction.

Carcinogenicity: See section 11.3

4. First-Aid Measures

4.1 Inhalation:

- Remove the patient to fresh air.
- If breathing has stopped or patient experiences difficulty in breathing, administer artificial respiration.

Eyes:

- Remove contact lenses. Gently flush the eyes and surrounding areas with lukewarm water for 15 minutes.
- If irritation persists, seek medical attention.

Skin:

- Remove contaminated clothing.
- Wipe material from the skin. Rinse the affected area with large amounts of water for 15 minutes.
- If irritation persists, seek medical attention.

Ingestion:

If the subject is completely conscious: Give 8-12 ounces of water and seek medical attention.

If the subject is unconscious: Remove any evidence of the substance from the patient's mouth. NEVER GIVE ANYTHING BY MOUTH TO AN UNCONSCIOUS PERSON.

4.2 Medical Treatment/Notes to Physician: Breathing of dust may aggravate asthma or other pulmonary diseases.

Sodium Sulfite

Material Safety Data Sheet

5. Fire-Fighting Measures

5.1 Flash point: Non-combustible

5.2 Auto-ignition Temperature: Not applicable.

5.3 Flammability Limits: Not applicable.

5.4 Unusual Fire and Explosion Hazards: Non-combustible. Generates hazardous SO_2 during decomposition.

5.5 Common Extinguishing Methods: In case of fire in close proximity, all means of extinguishing are acceptable.

5.6 Fire Fighting Procedures: Wear NIOSH-approved self-contained breathing apparatus. Use water spray to keep containers cool and to knock down fumes.

6. Accidental Release Measures

6.1 Precautions: Avoid excessive dust.

6.2 Cleanup methods:

- Clean up uncontaminated material and recycle into process.
- Place unusable material into a closed, labeled container compatible with the product.

6.3 Precautions for protection of the environment:

- Sweep up residual material.
- Do not flush to drain.
- Prevent material from entering public sewer systems or any waterways.
- Dispose of waste in accordance with applicable federal, state, and local environmental laws and regulations.

7. Handling and Storage

7.1 Handling:

- Avoid prolonged or repeated contact with the skin or eyes.
- Do not wear contact lenses without proper eye protection when using this product.
- Wash exposed areas promptly and thoroughly after skin contact from working with this product and before eating, drinking, using tobacco products or using the rest room.
- Avoid prolonged or repeated breathing of dusts.
- Use vacuum or wet mop to clean up dust.

7.2 Storage:

- Keep in a closed, properly labeled container in a dry area away from acids.
- Protect from physical damage.

7.3 Specific Uses: See Section 1.2

7.4 Packaging:

- Bulk rail car & truck.
- Paper+PE.
- Woven plastic material + PE coating.
- Woven plastic material + PE.

Sodium Sulfite

Material Safety Data Sheet

8. Exposure Controls/Personal Protection

8.1 Exposure Limit Values:

Exposure Limit Values	TLV® ACGIH®-USA (2002)	OSHA PEL
Sodium Sulfite	Not listed	Nuisance Dust-5mg/m³ (Respirable Fraction), 15 mg/m³ (Total Dust).
Sulfur Dioxide Gas	TWA-2 ppm STEL-5 ppm IDLH-100ppm	

ACGIH® and TLV® are registered trademarks of the American Conference of Governmental Industrial Hygienists.

8.2 Occupational Exposure Controls:

8.2.1 Ventilation: In places with the possibility for creating dust in excess of exposure limits, ventilation should be provided.

8.2.2 Respiratory protection: In case of significant or accidental dust emissions, a NIOSH/MSHA approved respirator should be worn. If SO_2 is present, (see section 10), use an NIOSH-approved air supplied positive pressure respirator or acid gas canister.

8.2.3 Hand protection: Cotton gloves are adequate for routine handling of dry product. For solutions, wear acid impervious gloves.

8.2.4 Eye protection: Wear chemical safety goggles. Do not wear contact lenses without proper eye protection.

8.2.5 Skin protection: Wear boots, apron, long sleeves and other protective clothing suitable for use to prevent contact with the skin.

8.3 Other precautions: An eyewash and safety shower should be nearby and ready for use. Use good hygiene practices when handling this product including changing work clothes after use. Do not eat, drink or smoke in areas where this material is handled. Persons with allergic symptoms should seek advice from medical personnel as to whether exposure to the substance should be curtailed or eliminated.

9. Physical and Chemical Properties

9.1 Appearance: Granular solid
Color: White
Odor: Odorless

9.2 Important Health, Safety and Environmental information:
pH: 9.6-9.8 (1% solution)

Change of state:
Melting point: Decomposes at approximately 600°C (1112°F)
Boiling point: Not Applicable
Decompositon Temperature: Approximately 600°C (1112°F)

Flash Point: Not applicable

Flammability (solid, gas): Not applicable

Explosive Properties: Not applicable

Oxidizing Properties: Decomposition releases oxides of sulfur

Vapor Pressure: No data

Relative Density:
Specific gravity: 2.63 @ 20°C (68°F)
(H_2O=1)

Solubility:
Water: 27g Sodium Sulfite in 100g water @ 20°C (68°F)
Fat: Not applicable

Partition coefficient: Not applicable
P (n-octanol/water)

Viscosity: No data

Vapor Density (air=1): Not applicable

Evaporation Rate: No data

Surface Tension: Not applicable

9.3 **Other Information:** Bulk Density: 95-100 lbs/ft^3 (1522-1602 kg/m^3).

10. Stability and Reactivity

Stability: Stable at ambient temperatures and atmospheric pressure.

10.1 **Conditions to avoid:**
- High temperatures
- Moisture.

10.2 **Materials and substances to avoid:**
- Contact with strong oxidizers cause vigorous exothermic reactions.
- Contact with acids will release SO_2.

10.3 **Hazardous decomposition products:** Oxides of sulfur and sulfur dioxide gas.

10.4 **Hazardous Polymerization:** Not applicable

Sodium Sulfite

Material Safety Data Sheet

11. Toxicological Information

11.1 Acute toxicity:

Oral: LD_{50} - 820 mg/kg species: mouse

11.2 Chronic toxicity: Can cause allergic reactions (headaches, difficulty in breathing, rapid heart rate and anaphylaxis) to susceptible individuals.

11.3 Carcinogenic Designation: None

12. Ecological Information

12.1 Acute ecotoxicity:

- 96 hour LC_{50}, Goldfish: 100 mg/l.
- 24, 48, 96 hour TLm Mosquito fish: 2,600 ppm.
- BOD (Biological Oxygen Demand) = 0.12 LB/LB instantaneous.

12.2 Chronic ecotoxicity: No data

12.3 Mobility: No data

12.4 Degradation

Abiotic: No data

Biotic: No data

12.5 Potential for bioaccumulation: Not expected to occur

12.6 Other adverse effects / comments: Sodium sulfite is an oxygen scavenger when introduced to water.

13. Disposal Considerations

13.1 Waste treatment: Sodium sulfite is not a listed hazardous waste under 40 CFR 261. However, state and local regulations for waste disposal may be more restrictive. Spilled product should be disposed of in an EPA approved disposal facility in accordance with applicable national, state and local environmental laws and regulations.

13.2 Packaging treatment: To avoid treatments, use dedicated containers where possible. Rinse the empty containers and treat the effluent in the same way as waste. Consult current federal, state and local regulations regarding the proper disposal of emptied containers.

13.3 RCRA Hazardous Waste: Not Listed

14. Transport Information

Mode	DOT	IMDG	IATA
Proper Shipping Name	Not a regulated hazardous material	Not a regulated hazardous material	Not a regulated hazardous material
Emergency Info	It is recommended that ERG guide # 111 be used for all non DOT regulated material.		
STCC #	28-123-80		

15. Regulatory Information

National Regulations (US)

TSCA Inventory 8(b): Yes

SARA Title III Sec. 302/303 Extremely Hazardous Substances (40 CFR355): No

SARA Title III Sec. 311/312 (40 CFR 370:
Hazard: Category Acute & chronic health hazard
Threshold planning quantity: 10,000 lbs

SARA Title III Sec. 313 Toxic Chemical Emissions Reporting (40 CFR 372): No

CERCLA Hazardous Substance (40CFR Part 302): No

State Component Listing: None identified

National Regulations (Canada)

Canadian NDSL/DSL Registration: DSL

WHMIS Classification: D2B - Material causing other toxic effects

This product has been classified in accordance with the hazard criteria of the ***Controlled Products Regulations*** and the MSDS contains all the information required by the ***Controlled Products Regulations.***

Labeling according to Directive 1999/45/EC.

Symbols	None	
Phrases R	22	Harmful if swallowed.
	36/38	Irritating to eyes and skin.
	40	Possibility of irreversible effects.
Phrases S	22	Do not breathe dust.
	26	In case of contact with eyes, rinse immediately with plenty of water and seek medical attention.
	36	Wear suitable protective clothing.

16. Other Information

The NSF International recommends that the maximum usage level is 22 mg/l for potable water treatment, unless usage is ozone reduction. To reduce ozone, this product may be used at a stoichiometric ratio of 1 to 1, or a ratio of 215 mg/l of sodium sulfite to 100 mg/l of ozone. Residual sodium sulfite levels shall not exceed 100 ppb in the finished water.

This product is not for food or drug use unless material is labeled "food grade". For food grade product, the following applies:

1. Effective August 8, 1987, the FDA has banned the use of "Sulfiting Agents" or "Sulfites" on fruits and vegetables intended to be served raw or sold raw to consumers.
2. Effective January 9, 1987, the FDA is requiring when a sulfite is present in a dedtectable amount in a finished food, regardless of whether it has been directly or indirectly added via one or more of the food ingredients, it must be declared on the label. The regulation defines a "detectable amount" of sulfite to be 10 ppm.
3. Sulfiting agents or sulfites are not to be used on foods or meats recognized as a source of Vitamin B1.

16.1 Ratings:

NFPA (NATIONAL FIRE PROTECTION ASSOCIATION)
Health = 2 Flammability = 0 Instability = 1 Special = None

HMIS (HAZARDOUS MATERIAL INFORMATION SYSTEM)
Health = 2 Fire = 0 Reactivity = 1 PPE = Supplied by User; dependent on local conditions

16.2 Other Information:

The previous information is based upon our current knowledge and experience of our product and is not exhaustive. It applies to the product as defined by the specifications. In case of combinations or mixtures, one must confirm that no new hazards are likely to exist. In any case, the user is not exempt from observing all legal, administrative and regulatory procedures relating to the product, personal hygiene, and integrity of the work environment. (Unless noted to the contrary, the technical information applies only to pure product).

To our actual knowledge, the information contained herein is accurate as of the date of this document. However, neither Solvay Chemicals, Inc. nor any of its affiliates makes any warranty, express or implied, or accepts any liability in connection with this information or its use. This information is for use by technically skilled persons at their own discretion and risk and does not relate to the use of this product in combination with any other substance or any other process. This is not a license under any patent or other proprietary right. The user alone must finally determine suitability of any information or material for any contemplated use, the manner of use and whether any patents are infringed.

TRADEMARKS: All trade names products referenced herein are either trademarks or registered trademarks of Solvay Chemicals, Inc. or affiliate unless otherwise indicated.

16.3 Reason for revision:

Supersedes edition: Solvay Minerals MSDS #003 dated 06/26/03
Purpose of revision: Change Company name and MSDS format

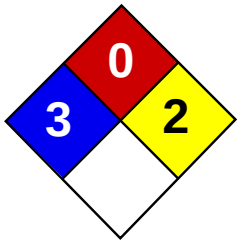

Health	3
Fire	0
Reactivity	2
Personal Protection	

Material Safety Data Sheet
Sulfuric acid MSDS

Section 1: Chemical Product and Company Identification

Product Name: Sulfuric acid

Catalog Codes: SLS2539, SLS1741, SLS3166, SLS2371, SLS3793

CAS#: 7664-93-9

RTECS: WS5600000

TSCA: TSCA 8(b) inventory: Sulfuric acid

CI#: Not applicable.

Synonym: Oil of Vitriol; Sulfuric Acid

Chemical Name: Hydrogen sulfate

Chemical Formula: H2-SO4

Contact Information:

Sciencelab.com, Inc.
14025 Smith Rd.
Houston, Texas 77396

US Sales: **1-800-901-7247**
International Sales: **1-281-441-4400**

Order Online: ScienceLab.com

CHEMTREC (24HR Emergency Telephone), call: 1-800-424-9300

International CHEMTREC, call: 1-703-527-3887

For non-emergency assistance, call: 1-281-441-4400

Section 2: Composition and Information on Ingredients

Composition:

Name	CAS #	% by Weight
Sulfuric acid	7664-93-9	95 - 98

Toxicological Data on Ingredients: Sulfuric acid: ORAL (LD50): Acute: 2140 mg/kg [Rat.]. VAPOR (LC50): Acute: 510 mg/m 2 hours [Rat]. 320 mg/m 2 hours [Mouse].

Section 3: Hazards Identification

Potential Acute Health Effects:
Very hazardous in case of skin contact (corrosive, irritant, permeator), of eye contact (irritant, corrosive), of ingestion, of inhalation. Liquid or spray mist may produce tissue damage particularly on mucous membranes of eyes, mouth and respiratory tract. Skin contact may produce burns. Inhalation of the spray mist may produce severe irritation of respiratory tract, characterized by coughing, choking, or shortness of breath. Severe over-exposure can result in death. Inflammation of the eye is characterized by redness, watering, and itching. Skin inflammation is characterized by itching, scaling, reddening, or, occasionally, blistering.

Potential Chronic Health Effects:
CARCINOGENIC EFFECTS: Classified 1 (Proven for human.) by IARC, + (Proven.) by OSHA. Classified A2 (Suspected for human.) by ACGIH. MUTAGENIC EFFECTS: Not available. TERATOGENIC EFFECTS: Not available. DEVELOPMENTAL TOXICITY: Not available. The substance may be toxic to kidneys, lungs, heart, cardiovascular system, upper respiratory tract, eyes, teeth. Repeated or prolonged exposure to the substance can produce target organs damage. Repeated or prolonged

contact with spray mist may produce chronic eye irritation and severe skin irritation. Repeated or prolonged exposure to spray mist may produce respiratory tract irritation leading to frequent attacks of bronchial infection. Repeated exposure to a highly toxic material may produce general deterioration of health by an accumulation in one or many human organs.

Section 4: First Aid Measures

Eye Contact:
Check for and remove any contact lenses. In case of contact, immediately flush eyes with plenty of water for at least 15 minutes. Cold water may be used. Get medical attention immediately.

Skin Contact:
In case of contact, immediately flush skin with plenty of water for at least 15 minutes while removing contaminated clothing and shoes. Cover the irritated skin with an emollient. Cold water may be used.Wash clothing before reuse. Thoroughly clean shoes before reuse. Get medical attention immediately.

Serious Skin Contact:
Wash with a disinfectant soap and cover the contaminated skin with an anti-bacterial cream. Seek immediate medical attention.

Inhalation:
If inhaled, remove to fresh air. If not breathing, give artificial respiration. If breathing is difficult, give oxygen. Get medical attention immediately.

Serious Inhalation:
Evacuate the victim to a safe area as soon as possible. Loosen tight clothing such as a collar, tie, belt or waistband. If breathing is difficult, administer oxygen. If the victim is not breathing, perform mouth-to-mouth resuscitation. WARNING: It may be hazardous to the person providing aid to give mouth-to-mouth resuscitation when the inhaled material is toxic, infectious or corrosive. Seek immediate medical attention.

Ingestion:
Do NOT induce vomiting unless directed to do so by medical personnel. Never give anything by mouth to an unconscious person. Loosen tight clothing such as a collar, tie, belt or waistband. Get medical attention if symptoms appear.

Serious Ingestion: Not available.

Section 5: Fire and Explosion Data

Flammability of the Product: Non-flammable.

Auto-Ignition Temperature: Not applicable.

Flash Points: Not applicable.

Flammable Limits: Not applicable.

Products of Combustion:
Products of combustion are not available since material is non-flammable. However, products of decompostion include fumes of oxides of sulfur. Will react with water or steam to produce toxic and corrosive fumes. Reacts with carbonates to generate carbon dioxide gas. Reacts with cyanides and sulfides to form poisonous hydrogen cyanide and hydrogen sulfide respectively.

Fire Hazards in Presence of Various Substances: Combustible materials

Explosion Hazards in Presence of Various Substances:
Risks of explosion of the product in presence of mechanical impact: Not available. Risks of explosion of the product in presence of static discharge: Not available. Slightly explosive in presence of oxidizing materials.

Fire Fighting Media and Instructions: Not applicable.

Special Remarks on Fire Hazards:
Metal acetylides (Monocesium and Monorubidium), and carbides ignite with concentrated sulfuric acid. White Phosphorous + boiling Sulfuric acid or its vapor ignites on contact. May ignite other combustible materials. May cause fire when sulfuric acid is mixed with Cyclopentadiene, cyclopentanone oxime, nitroaryl amines, hexalithium disilicide, phorphorous (III) oxide, and oxidizing agents such as chlorates, halogens, permanganates.

Special Remarks on Explosion Hazards:
Mixtures of sulfuric acid and any of the following can explode: p-nitrotoluene, pentasilver trihydroxydiaminophosphate, perchlorates, alcohols with strong hydrogen peroxide, ammonium tetraperoxychromate, mercuric nitrite, potassium chlorate, potassium permanganate with potassium chloride, carbides, nitro compounds, nitrates, carbides, phosphorous, iodides, picratres, fulminats, dienes, alcohols (when heated) Nitramide decomposes explosively on contact with concentrated sulfuric acid. 1,3,5-Trinitrosohexahydro-1,3,5-triazine + sulfuric acid causes explosive decompositon.

Section 6: Accidental Release Measures

Small Spill:
Dilute with water and mop up, or absorb with an inert dry material and place in an appropriate waste disposal container. If necessary: Neutralize the residue with a dilute solution of sodium carbonate.

Large Spill:
Corrosive liquid. Poisonous liquid. Stop leak if without risk. Absorb with DRY earth, sand or other non-combustible material. Do not get water inside container. Do not touch spilled material. Use water spray curtain to divert vapor drift. Use water spray to reduce vapors. Prevent entry into sewers, basements or confined areas; dike if needed. Call for assistance on disposal. Neutralize the residue with a dilute solution of sodium carbonate. Be careful that the product is not present at a concentration level above TLV. Check TLV on the MSDS and with local authorities.

Section 7: Handling and Storage

Precautions:
Keep locked up.. Keep container dry. Do not ingest. Do not breathe gas/fumes/ vapor/spray. Never add water to this product. In case of insufficient ventilation, wear suitable respiratory equipment. If ingested, seek medical advice immediately and show the container or the label. Avoid contact with skin and eyes. Keep away from incompatibles such as oxidizing agents, reducing agents, combustible materials, organic materials, metals, acids, alkalis, moisture. May corrode metallic surfaces. Store in a metallic or coated fiberboard drum using a strong polyethylene inner package.

Storage:
Hygroscopic. Reacts. violently with water. Keep container tightly closed. Keep container in a cool, well-ventilated area. Do not store above 23°C (73.4°F).

Section 8: Exposure Controls/Personal Protection

Engineering Controls:
Provide exhaust ventilation or other engineering controls to keep the airborne concentrations of vapors below their respective threshold limit value. Ensure that eyewash stations and safety showers are proximal to the work-station location.

Personal Protection:
Face shield. Full suit. Vapor respirator. Be sure to use an approved/certified respirator or equivalent. Gloves. Boots.

Personal Protection in Case of a Large Spill:
Splash goggles. Full suit. Vapor respirator. Boots. Gloves. A self contained breathing apparatus should be used to avoid inhalation of the product. Suggested protective clothing might not be sufficient; consult a specialist BEFORE handling this product.

Exposure Limits:
TWA: 1 STEL: 3 (mg/m3) [Australia] Inhalation TWA: 1 (mg/m3) from OSHA (PEL) [United States] Inhalation TWA: 1 STEL: 3 (mg/m3) from ACGIH (TLV) [United States] [1999] Inhalation TWA: 1 (mg/m3) from NIOSH [United States] Inhalation TWA: 1 (mg/m3) [United Kingdom (UK)]Consult local authorities for acceptable exposure limits.

Section 9: Physical and Chemical Properties

Physical state and appearance: Liquid. (Thick oily liquid.)

Odor: Odorless, but has a choking odor when hot.

Taste: Marked acid taste. (Strong.)

Molecular Weight: 98.08 g/mole

Color: Colorless.

pH (1% soln/water): Acidic.

Boiling Point:
270°C (518°F) - 340 deg. C Decomposes at 340 deg. C

Melting Point: -35°C (-31°F) to 10.36 deg. C (93% to 100% purity)

Critical Temperature: Not available.

Specific Gravity: 1.84 (Water = 1)

Vapor Pressure: Not available.

Vapor Density: 3.4 (Air = 1)

Volatility: Not available.

Odor Threshold: Not available.

Water/Oil Dist. Coeff.: Not available.

Ionicity (in Water): Not available.

Dispersion Properties: See solubility in water.

Solubility:
Easily soluble in cold water. Sulfuric is soluble in water with liberation of much heat. Soluble in ethyl alcohol.

Section 10: Stability and Reactivity Data

Stability: The product is stable.

Instability Temperature: Not available.

Conditions of Instability:
Conditions to Avoid: Incompatible materials, excess heat, combustible material materials, organic materials, exposure to moist air or water, oxidizers, amines, bases. Always add the acid to water, never the reverse.

Incompatibility with various substances:
Reactive with oxidizing agents, reducing agents, combustible materials, organic materials, metals, acids, alkalis, moisture.

Corrosivity:
Extremely corrosive in presence of aluminum, of copper, of stainless steel(316). Highly corrosive in presence of stainless steel(304). Non-corrosive in presence of glass.

Special Remarks on Reactivity:
Hygroscopic. Strong oxidizer. Reacts violently with water and alcohol especially when water is added to the product. Incompatible (can react explosively or dangerously) with the following: ACETIC ACID, ACRYLIC ACID, AMMONIUM HYDROXIDE, CRESOL, CUMENE, DICHLOROETHYL ETHER, ETHYLENE CYANOHYDRIN, ETHYLENEIMINE, NITRIC ACID, 2-NITROPROPANE, PROPYLENE OXIDE, SULFOLANE, VINYLIDENE CHLORIDE, DIETHYLENE GLYCOL MONOMETHYL ETHER, ETHYL ACETATE, ETHYLENE CYANOHYDRIN, ETHYLENE GLYCOL MONOETHYL ETHER ACETATE, GLYOXAL, METHYL ETHYL KETONE, dehydrating agents, organic materials, moisture (water), Acetic anhydride, Acetone, cyanohydrin, Acetone+nitric acid, Acetone + potassium dichromate, Acetonitrile, Acrolein, Acrylonitrile, Acrylonitrile +water, Alcohols + hydrogen peroxide, ally compounds such as Allyl alcohol, and Allyl Chloride, 2-Aminoethanol, Ammonium hydroxide, Ammonium triperchromate, Aniline, Bromate + metals, Bromine pentafluoride, n-Butyraldehyde, Carbides, Cesium acetylene carbide, Chlorates, Cyclopentanone oxime, chlorinates, Chlorates + metals, Chlorine trifluoride, Chlorosulfonic acid, 2-cyano-4-nitrobenzenediazonium hydrogen sulfate, Cuprous nitride, p-chloronitrobenzene, 1,5-Dinitronaphthlene +

sulfur, Diisobutylene, p-dimethylaminobenzaldehyde, 1,3-Diazidobenzene, Dimethylbenzylcarbinol + hydrogen peroxide, Epichlorohydrin, Ethyl alcohol + hydrogen peroxide, Ethylene diamine, Ethylene glycol and other glycols, , Ethylenimine, Fulminates, hydrogen peroxide, Hydrochloric acid, Hydrofluoric acid, Iodine heptafluoride, Indane + nitric acid, Iron, Isoprene, Lithium silicide, Mercuric nitride, Mesityl oxide, Mercury nitride, Metals (powdered), Nitromethane, Nitric acid + glycerides, p-Nitrotoluene, Pentasilver trihydroxydiaminophosphate, Perchlorates, Perchloric acid, Permanganates + benzene, 1-Phenyl-2-methylpropyl alcohol + hydrogen peroxide, Phosphorus, Phosphorus isocyanate, Picrates, Potassium tert-butoxide, Potassium chlorate, Potassium Permanganate and other permanganates, halogens, amines, Potassium Permanganate + Potassium chloride, Potassium Permanganate + water, Propiolactone (beta)-, Pyridine, Rubidium aceteylene carbide, Silver permanganate, Sodium, Sodium carbonate, sodium hydroxide, Steel, styrene monomer, toluene + nitric acid, Vinyl acetate, Thalium (I) azidodithiocarbonate, Zinc chlorate, Zinc Iodide, azides, carbonates, cyanides, sulfides, sulfites, alkali hydrides, carboxylic acid anhydrides, nitriles, olefinic organics, aqueous acids, cyclopentadiene, cyano-alcohols, metal acetylides, Hydrogen gas is generated by the action of the acid on most metals (i.e. lead, copper, tin, zinc, aluminum, etc.). Concentrated sulfuric acid oxidizes, dehydrates, or sulfonates most organic compounds.

Special Remarks on Corrosivity:
Non-corrosive to lead and mild steel, but dillute acid attacks most metals. Attacks many metals releasing hydrogen. Minor corrosive effect on bronze. No corrosion data on brass or zinc.

Polymerization: Will not occur.

Section 11: Toxicological Information

Routes of Entry: Absorbed through skin. Dermal contact. Eye contact. Inhalation. Ingestion.

Toxicity to Animals:
WARNING: THE LC50 VALUES HEREUNDER ARE ESTIMATED ON THE BASIS OF A 4-HOUR EXPOSURE. Acute oral toxicity (LD50): 2140 mg/kg [Rat.]. Acute toxicity of the vapor (LC50): 320 mg/m3 2 hours [Mouse].

Chronic Effects on Humans:
CARCINOGENIC EFFECTS: Classified 1 (Proven for human.) by IARC, + (Proven.) by OSHA. Classified A2 (Suspected for human.) by ACGIH. May cause damage to the following organs: kidneys, lungs, heart, cardiovascular system, upper respiratory tract, eyes, teeth.

Other Toxic Effects on Humans:
Extremely hazardous in case of inhalation (lung corrosive). Very hazardous in case of skin contact (corrosive, irritant, permeator), of eye contact (corrosive), of ingestion, .

Special Remarks on Toxicity to Animals: Not available.

Special Remarks on Chronic Effects on Humans:
Mutagenicity: Cytogenetic Analysis: Hamster, ovary = 4mmol/L Reproductive effects: May cause adverse reproductive effects based on animal data. Developmental abnormalities (musculoskeletal) in rabbits at a dose of 20 mg/m3 for 7 hrs.(RTECS) Teratogenecity: neither embryotoxic, fetoxic, nor teratogenetic in mice or rabbits at inhaled doses producing some maternal toxicity

Special Remarks on other Toxic Effects on Humans:
Acute Potential Health Effects: Skin: Causes severe skin irritation and burns. Continued contact can cause tissue necrosis. Eye: Causes severe eye irritation and burns. May cause irreversible eye injury. Ingestion: Harmful if swallowed. May cause permanent damage to the digestive tract. Causes gastrointestial tract burns. May cause perforation of the stomach, GI bleeding, edema of the glottis, necrosis and scarring, and sudden circulatory collapse(similar to acute inhalation). It may also cause systemic toxicity with acidosis. Inhalation: May cause severe irritation of the respiratory tract and mucous membranes with sore throat, coughing, shortness of breath, and delayed lung edema. Causes chemical burns to the repiratory tract. Inhalation may be fatal as a result of spasm, inflammation, edema of the larynx and bronchi, chemical pneumonitis, and pulmonary edema. Cause corrosive action on mucous membranes. May affect cardiovascular system (hypotension, depressed cardiac output, bradycardia). Circulatory collapse with clammy skin, weak and rapid pulse, shallow respiration, and scanty urine may follow. Circulatory shock is often the immediate cause of death. May also affect teeth(changes in teeth and supporting structures - erosion, discoloration). Chronic Potential Health Effects: Inhalation: Prolonged or repeated inhalation may affect behavior (muscle contraction or spasticity), urinary system (kidney damage), and cardiovascular system, heart (ischemic heart leisons), and respiratory system/lungs(pulmonary edema, lung damage), teeth (dental discoloration, erosion). Skin: Prolonged or repeated skin contact may cause dermatitis, an allergic skin reaction.

Section 12: Ecological Information

Ecotoxicity: Ecotoxicity in water (LC50): 49 mg/l 48 hours [bluegill/sunfish].

BOD5 and COD: Not available.

Products of Biodegradation:
Possibly hazardous short term degradation products are not likely. However, long term degradation products may arise.

Toxicity of the Products of Biodegradation: The products of degradation are less toxic than the product itself.

Special Remarks on the Products of Biodegradation: Not available.

Section 13: Disposal Considerations

Waste Disposal:
Sulfuric acid may be placed in sealed container or absorbed in vermiculite, dry sand, earth, or a similar material. It may also be diluted and neutralized. Be sure to consult with local or regional authorities (waste regulators) prior to any disposal. Waste must be disposed of in accordance with federal, state and local environmental control regulations.

Section 14: Transport Information

DOT Classification: Class 8: Corrosive material

Identification: : Sulfuric acid UNNA: 1830 PG: II

Special Provisions for Transport: Not available.

Section 15: Other Regulatory Information

Federal and State Regulations:
Illinois toxic substances disclosure to employee act: Sulfuric acid New York release reporting list: Sulfuric acid Rhode Island RTK hazardous substances: Sulfuric acid Pennsylvania RTK: Sulfuric acid Minnesota: Sulfuric acid Massachusetts RTK: Sulfuric acid New Jersey: Sulfuric acid California Director's List of Hazardous Substances (8 CCR 339): Sulfuric acid Tennessee RTK: Sulfuric acid TSCA 8(b) inventory: Sulfuric acid SARA 302/304/311/312 extremely hazardous substances: Sulfuric acid SARA 313 toxic chemical notification and release reporting: Sulfuric acid CERCLA: Hazardous substances.: Sulfuric acid: 1000 lbs. (453.6 kg)

Other Regulations:
OSHA: Hazardous by definition of Hazard Communication Standard (29 CFR 1910.1200). EINECS: This product is on the European Inventory of Existing Commercial Chemical Substances.

Other Classifications:

WHMIS (Canada):
CLASS D-1A: Material causing immediate and serious toxic effects (VERY TOXIC). CLASS E: Corrosive liquid.

DSCL (EEC):
R35- Causes severe burns. S2- Keep out of the reach of children. S26- In case of contact with eyes, rinse immediately with plenty of water and seek medical advice. S30- Never add water to this product. S45- In case of accident or if you feel unwell, seek medical advice immediately (show the label where possible).

HMIS (U.S.A.):

Health Hazard: 3

Fire Hazard: 0

Reactivity: 2

Personal Protection:

National Fire Protection Association (U.S.A.):

Health: 3

Flammability: 0

Reactivity: 2

Specific hazard:

Protective Equipment:
Gloves. Full suit. Vapor respirator. Be sure to use an approved/certified respirator or equivalent. Wear appropriate respirator when ventilation is inadequate. Face shield.

Section 16: Other Information

References:
-Material safety data sheet emitted by: la Commission de la Santé et de la Sécurité du Travail du Québec. -The Sigma-Aldrich Library of Chemical Safety Data, Edition II. -Hawley, G.G.. The Condensed Chemical Dictionary, 11e ed., New York N.Y., Van Nostrand Reinold, 1987.

Other Special Considerations: Not available.

Created: 10/09/2005 11:58 PM

Last Updated: 11/01/2010 12:00 PM

Material Safety Data Sheet

1 - Chemical Product and Company Identification

Manufacturer: WD-40 Company **Address: 1061 Cudahy Place (92110)** **P.O. Box 80607** **San Diego, California, USA** **92138 –0607** **Telephone:** **Emergency only: 1-888-324-7596 (PROSAR)** **Information: 1-888-324-7596** **Chemical Spills: 1-800-424-9300 (Chemtrec)** **1-703-527-3887 (International Calls)**	**Chemical Name: Organic Mixture** **Trade Name: WD-40 Aerosol** **Product Use: Lubricant, Penetrant, Drives Out Moisture, Removes and Protects Surfaces From Corrosion** **MSDS Date Of Preparation: 3/11/10**

2 – Hazards Identification

Emergency Overview:
DANGER! Flammable aerosol. Contents under pressure. Harmful or fatal if swallowed. If swallowed, may be aspirated and cause lung damage. May cause eye irritation. Avoid eye contact. Use with adequate ventilation. Keep away from heat, sparks and all other sources of ignition.

Symptoms of Overexposure:
Inhalation: High concentrations may cause nasal and respiratory irritation and central nervous system effects such as headache, dizziness and nausea. Intentional abuse may be harmful or fatal.
Skin Contact: Prolonged and/or repeated contact may produce mild irritation and defatting with possible dermatitis.
Eye Contact: Contact may be irritating to eyes. May cause redness and tearing.
Ingestion: This product has low oral toxicity. Swallowing may cause gastrointestinal irritation, nausea, vomiting and diarrhea. This product is an aspiration hazard. If swallowed, can enter the lungs and may cause chemical pneumonitis, severe lung damage and death.
Chronic Effects: None expected.
Medical Conditions Aggravated by Exposure: Preexisting eye, skin and respiratory conditions may be aggravated by exposure.

Suspected Cancer Agent:
Yes No X

3 - Composition/Information on Ingredients

Ingredient	CAS #	Weight Percent
Aliphatic Hydrocarbon	64742-47-8	45-50
Petroleum Base Oil	64742-58-1 64742-53-6 64742-56-9 64742-65-0	<25
LVP Aliphatic Hydrocarbon	64742-47-8	12-18
Carbon Dioxide	124-38-9	2-3
Surfactant	Proprietary	<2
Non-Hazardous Ingredients	Mixture	<10

4 – First Aid Measures

Ingestion (Swallowed): Aspiration Hazard. DO NOT induce vomiting. Call physician, poison control center or the WD-40 Safety Hotline at 1-888-324-7596 immediately.
Eye Contact: Flush thoroughly with water. Remove contact lenses if present after the first 5 minutes and continue flushing for several more minutes. Get medical attention if irritation persists.

Skin Contact: Wash with soap and water. If irritation develops and persists, get medical attention.
Inhalation (Breathing): If irritation is experienced, move to fresh air. Get medical attention if irritation or other symptoms develop and persist.

5 – Fire Fighting Measures

Extinguishing Media: Use water fog, dry chemical, carbon dioxide or foam. Do not use water jet or flooding amounts of water. Burning product will float on the surface and spread fire.
Special Fire Fighting Procedures: Firefighters should always wear positive pressure self-contained breathing apparatus and full protective clothing. Cool fire-exposed containers with water. Use shielding to protect against bursting containers.
Unusual Fire and Explosion Hazards: Contents under pressure. Keep away from ignition sources and open flames. Exposure of containers to extreme heat and flames can cause them to rupture often with violent force. Vapors are heavier than air and may travel along surfaces to remote ignition sources and flash back.

6 – Accidental Release Measures

Wear appropriate protective clothing (see Section 8). Eliminate all sources of ignition and ventilate area. Leaking cans should be placed in a plastic bag or open pail until the pressure has dissipated. Contain and collect liquid with an inert absorbent and place in a container for disposal. Clean spill area thoroughly. Report spills to authorities as required.

7 – Handling and Storage

Handling: Avoid contact with eyes. Avoid prolonged contact with skin. Avoid breathing vapors or aerosols. Use only with adequate ventilation. Keep away from heat, sparks, pilot lights, hot surfaces and open flames. Unplug electrical tools, motors and appliances before spraying or bringing the can near any source of electricity. Electricity can burn a hole in the can and cause contents to burst into flames. To avoid serious burn injury, do not let the can touch battery terminals, electrical connections on motors or appliances or any other source of electricity. Wash thoroughly with soap and water after handling. Keep containers closed when not in use. Keep out of the reach of children. Do not puncture, crush or incinerate containers, even when empty.
Storage: Store in a cool, well-ventilated area, away from incompatible materials Do not store above 120°F or in direct sunlight. U.F.C (NFPA 30B) Level 3 Aerosol.

8 – Exposure Controls/Personal Protection

Chemical	Occupational Exposure Limits
Aliphatic Hydrocarbon	1200 mg/m3 TWA (manufacturer recommended)
Petroleum Base Oil	5 mg/m3 TWA, 10 mg/m3 STEL ACGIH TLV 5 mg/m3 TWA OSHA PEL
LVP Aliphatic Hydrocarbon	1200 mg/m3 TWA (manufacturer recommended)
Carbon Dioxide	5000 ppm TWA (OSHA/ACGIH), 30,000 ppm STEL (ACGIH)
Surfactant	None Established
Non-Hazardous Ingredients	None Established

The Following Controls are Recommended for Normal Consumer Use of this Product
Engineering Controls: Use in a well-ventilated area.
Personal Protection:
Eye Protection: Avoid eye contact. Always spray away from your face.
Skin Protection: Avoid prolonged skin contact. Chemical resistant gloves recommended for operations where skin contact is likely.
Respiratory Protection: None needed for normal use with adequate ventilation.

For Bulk Processing or Workplace Use the Following Controls are Recommended
Engineering Controls: Use adequate general and local exhaust ventilation to maintain exposure levels below that occupational exposure limits.

Personal Protection:
Eye Protection: Safety goggles recommended where eye contact is possible.
Skin Protection: Wear chemical resistant gloves.
Respiratory Protection: None required if ventilation is adequate. If the occupational exposure limits are exceeded, wear a NIOSH approved respirator. Respirator selection and use should be based on contaminant type, form and concentration. Follow OSHA 1910.134, ANSI Z88.2 and good Industrial Hygiene practice.
Work/Hygiene Practices: Wash with soap and water after handling.

9 – Physical and Chemical Properties

Boiling Point:	361 - 369°F (183 - 187°C)	Specific Gravity:	0.8 – 0.82 @ 60°F
Solubility in Water:	Insoluble	pH:	Not Applicable
Vapor Pressure:	95-115 PSI @ 70°F	Vapor Density:	Greater than 1
Percent Volatile:	70-75%	VOC:	412 grams/liter (49.5%)
Coefficient of Water/Oil Distribution:	Not Determined	Appearance/Odor	Light amber liquid/mild odor
Flash Point:	122°F (49°C) Tag Open Cup (concentrate)	Flammable Limits: (Solvent Portion)	LEL: 0.6% UEL: 8.0%
Pour Point:	-63°C (-81.4°F) ASTM D-97	Kinematic Viscosity:	2.79-2.96cSt @ 100°F

10 – Stability and Reactivity

Stability: Stable
Hazardous Polymerization: Will not occur.
Conditions to Avoid: Avoid heat, sparks, flames and other sources of ignition. Do not puncture or incinerate containers.
Incompatibilities: Strong oxidizing agents.
Hazardous Decomposition Products: Carbon monoxide and carbon dioxide.

11 – Toxicological Information

The oral toxicity of this product is estimated to be greater than 5,000 mg/kg based on an assessment of the ingredients. This product is not classified as toxic by established criteria. It is an aspiration hazard.
None of the components of this product is listed as a carcinogen or suspected carcinogen or is considered a reproductive hazard.

12 – Ecological Information

No data is currently available.

13 - Disposal Considerations

If this product becomes a waste, it would be expected to meet the criteria of a RCRA ignitable hazardous waste (D001). However, it is the responsibility of the generator to determine at the time of disposal the proper classification and method of disposal. Dispose in accordance with federal, state, and local regulations.

14 – Transportation Information_

DOT Surface Shipping Description: Consumer Commodity, ORM-D
IMDG Shipping Description: Un1950, Aerosols, 2.1, LTD QTY

15 – Regulatory Information

U.S. Federal Regulations:

CERCLA 103 Reportable Quantity: This product is not subject to CERCLA reporting requirements, however, oil spills are reportable to the National Response Center under the Clean Water Act and many states have more stringent release reporting requirements. Report spills required under federal, state and local regulations.
SARA TITLE III:
Hazard Category For Section 311/312: Acute Health, Fire Hazard, Sudden Release of Pressure
Section 313 Toxic Chemicals: This product contains the following chemicals subject to SARA Title III Section 313 Reporting requirements: None
Section 302 Extremely Hazardous Substances (TPQ): None
EPA Toxic Substances Control Act (TSCA) Status: All of the components of this product are listed on the TSCA inventory.
California Safe Drinking Water and Toxic Enforcement Act (Proposition 65): This product does not contain chemicals regulated under California Proposition 65.
VOC Regulations: This product complies with the consumer product VOC limits of CARB, the US EPA and states adopting the OTC VOC rules.
Canadian Environmental Protection Act: One of the components is listed on the NDSL. All of the other ingredients are listed on the Canadian Domestic Substances List or exempt from notification.
Canadian WHMIS Classification: Class B-5 (Flammable Aerosol)
This MSDS has been prepared according to the criteria of the Controlled Products Regulation (CPR) and the MSDS contains all of the information required by the CPR.

16 – Other Information:

HMIS Hazard Rating:
Health – 1 (slight hazard), Fire Hazard – 4 (severe hazard), Reactivity – 0 (minimal hazard)

SIGNATURE: 

TITLE: Director of Global Quality Assurance

REVISION DATE: March 2010

SUPERSEDES: August 2009

Zep Commercial Sales & Service
A unit of Zep Inc.
P.O. Box 1060
Cartersville, GA 30120
1-888-805-HELP (4357)
www.zepcommercial.com

Material Safety Data Sheet

Section 1. Chemical Product and Company Identification

Product name Fast 505 - Industrial Cleaner & Degreaser

Product code ZU505

Date of issue 03/24/08 **Supersedes**

Emergency Telephone Numbers

For MSDS Information:
Compliance Services 404-352-1680

For Medical Emergency
INFOTRAC: (877) 541-2016 Toll Free - All Calls Recorded

For Transportation Emergency
CHEMTREC: (800) 424-9300 - All Calls Recorded
In the District of Columbia (202) 483-7616

Prepared By
Compliance Services
1420 Seaboard Industrial Blvd.
Atlanta, GA 30318

Section 2. Hazards Identification

Emergency overview

CAUTION

CAUSES EYE AND SKIN IRRITATION.
HARMFUL IF ABSORBED THROUGH SKIN.
HARMFUL IF SWALLOWED.

*Hazard Determination System (HDS): Health, Flammability, Reactivity

2	0	0

NOTE: MSDS data pertains to the product as delivered in the original shipping container(s). Risk of adverse effects are lessened by following all prescribed safety precautions, including the use of proper personal protective equipment.

Acute Effects **Routes of Entry** Eye contact. Absorbed through skin. Inhalation. Ingestion.

Eyes Causes eye irritation. Liquid in eye may cause irritation with possible damage if not rinsed immediately.

Skin May cause skin irritation. Harmful if absorbed through the skin. Skin inflammation is characterized by itching, scaling, reddening or, occasionally, blistering.

Inhalation Inhalation of the spray or mist may produce severe irritation of respiratory tract, characterized by coughing, choking or shortness of breath. Inhalation of high concentrations of vapor may affect the central nervous system.

Ingestion May be harmful if swallowed. Ingestion may cause gastrointestinal irritation and diarrhea.

Chronic effects Overexposure of this product by inhalation or absorption can produce central nervous system depression resulting in headache, nausea and/or dizziness. Repeated or prolonged exposure to the substance can produce damage to blood, kidneys, liver, upper respiratory tract.

Carcinogenicity Ingredients: Not listed as carcinogen by OSHA, NTP or IARC.

Additional Information: See Toxicological Information (Section 11)

Section 3. Composition/Information on Ingredients

Name of Hazardous Ingredients	CAS number	% by Weight
SODIUM METASILICATE; silicic acid (H2-Si-O3) disodium salt; water glass	6834-92-0	1 - 5
ETHYLENE GLYCOL MONOBUTYL ETHER; 2-butoxyethanol; butyl cellosolve	111-76-2	1 - 5

Section 4. First Aid Measures

Eye Contact Immediately flush eyes with plenty of water, occasionally lifting the upper and lower eyelids. Check for and remove any contact lenses. Continue to rinse for at least 10 minutes. Get medical attention immediately.

Skin Contact In case of contact, immediately flush skin with plenty of water for at least 15 minutes while removing contaminated clothing and shoes. Wash clothing before reuse. Get medical attention.

Inhalation Move exposed person to fresh air. If irritation persists, get medical attention.

Ingestion Wash out mouth with water. Do not induce vomiting unless directed to do so by medical personnel. If material has been swallowed and the exposed person is conscious, give small quantities of water to drink. Never give anything by mouth to an unconscious person. Get medical attention immediately.

Section 5. Fire Fighting Measures

National Fire Protection Association (U.S.A.)

Flash Point None.

Flammable Limits Not applicable.

Flammability Non-combustible.

Fire hazard No specific hazard.

Fire-Fighting Procedures Use an extinguishing agent suitable for the surrounding fire. Fire-fighters should wear appropriate protective equipment.

Section 6. Accidental Release Measures

Spill Clean up Put on appropriate personal protective equipment (see section 8). Stop leak if without risk. Dilute with water and mop up if water-soluble or absorb with an inert dry material and place in an appropriate waste disposal container. Dispose of via a licensed waste disposal contractor.

Section 7. Handling and Storage

Handling Put on appropriate personal protective equipment (see section 8). Avoid contact with eyes, skin and clothing. Avoid breathing vapors, spray or mists. Use only with adequate ventilation. Do not ingest. Empty containers retain product residue and can be hazardous. Do not reuse container.

Storage Store in original container protected from direct sunlight in a dry, cool and well-ventilated area, away from incompatible materials (see section 10) and food and drink. Keep container tightly closed and sealed until ready for use. Containers that have been opened must be carefully resealed and kept upright to prevent leakage. Keep out of the reach of children.

Section 8. Exposure Controls/Personal Protection

Product name	Exposure limits
SODIUM METASILICATE; silicic acid (H2-Si-O3) disodium salt; water glass	**Supplier Suggested (United States).** CEIL: 2 mg/m³ Form:
ETHYLENE GLYCOL MONOBUTYL ETHER; 2-butoxyethanol; butyl cellosolve	**ACGIH TLV (United States).** TWA: 20 ppm 8 hour(s). Form: **OSHA PEL (United States). Skin** TWA: 50 ppm 8 hour(s). Form:

Personal Protective Equipment (PPE)

Eyes Safety glasses.

Body Wear appropriate protective clothing to prevent skin contact. Chemical-resistant gloves.

Respiratory Use with adequate ventilation. A respirator is not needed under normal and intended conditions of product use.

Section 9. Physical and Chemical Properties

Physical State Liquid.

pH 12.75 - 13.25

Boiling Point 100°C (212°F)

Specific Gravity 1.032

Solubility Soluble in water in any proportion.

Color Colorless to light yellow.

Odor Lemon-like. [Slight]

Vapor Pressure Not determined.

Vapor Density Not determined.

Evaporation Rate Not determined.

VOC (Consumer) 36 (g/l). 0.30 lbs/gal 3.5%

Section 10. Stability and Reactivity

Stability and Reactivity The product is stable.

Incompatibility Reactive or incompatible with the following materials: oxidizing materials and acids.

Hazardous Polymerization Will not occur.

Hazardous Decomposition Products carbon oxides (CO, CO_2)

Section 11. Toxicological Information

Acute Toxicity

Product/ingredient name	Result	Species	Dose	Exposure
Sodium Metasilicate	LD50 Oral	Rat	1153 mg/kg	-
	LD50 Oral	Mouse	770 mg/kg	-
Ethylene Glycol Monobutyl Ether	LD50 Dermal	Rabbit	680 mg/kg	-
	LD50 Oral	Rat	1746 mg/kg	-
	LC50 Inhalation Vapor	Rat	450 ppm	4 hours

Section 12. Ecological Information

Environmental Effects No applicable toxicity data

Aquatic Ecotoxicity

Not available.

Section 13. Disposal Considerations

Waste Information

Waste must be disposed of in accordance with federal, state and local environmental control regulations. Consult your local or regional authorities for additional information.

Waste Stream Code: D002
Classification: - (Hazardous waste.)
Origin: - (RCRA waste.)

Section 14. Transport Information

Regulatory information	UN number	Proper shipping name	Classes	PG*	Label
DOT Classification	Not regulated.	- None.	Not a DOT controlled material (United States).		
TDG Classification	Not regulated.	- None.	Not a TDG-controlled material.	-	
IMDG Class	Not available.	Not available.	Not available.	-	

NOTE: DOT classification applies to most package sizes. For specific container size classifications or for size exceptions, refer to the Bill of Lading with your shipment.

PG* : Packing group

Section 15. Regulatory Information

U.S. Federal Regulations

SARA 313 toxic chemical notification and release reporting:

Product name

Ethylene Glycol Monobutyl Ether (Glycol Ethers)

Clean Water Act (CWA) 307: No products were found.

Clean Water Act (CWA) 311: No products were found.

Clean Air Act (CAA) 112 regulated toxic substances: No products were found.

All Components of this product are listed or exempt from listing on TSCA Inventory.

State Regulations

California Prop 65 No products were found.

Canada

WHMIS (Canada) Class D-2B: Material causing other toxic effects (Toxic).

Section 16. Other Information

To the best of our knowledge, the information contained herein is accurate. However, neither the above named supplier nor any of its subsidiaries assumes any liability whatsoever for the accuracy or completeness of the information contained herein.
Final determination of suitability of any material is the sole responsibility of the user. All materials may present unknown hazards and should be used with caution. Although certain hazards are described herein, we cannot guarantee that these are the only hazards that exist.

**NOTE: Hazard Determination System (HDS) ratings are based on a 0-4 rating scale, with 0 representing minimal hazards or risks, and 4 representing significant hazards or risks Although these ratings are not required on MSDSs under 29 CFR 1910.1200, the preparer may choose to provide them. HDS ratings are to be used with a fully implemented program to relay the meanings of this scale.*