RECOMMENDED PROTOCOLS FOR SAMPLING AND ANALYZING SUBTIDAL BENTHIC MACROINVERTEBRATE ASSEMBLAGES IN PUGET SOUND

For

U.S. Environmental Protection Agency
Region 10, Office of Puget Sound
1200 6th Avenue
Seattle, WA 98101

Puget Sound Water Quality Authority
P. O. Box 40900
Olympia, WA 98504-0900

January 1987

CONTENTS

Page

LIST OF FIGURES iii

LIST OF TABLES iv

ACKNOWLEDGEMENTS iv

INTRODUCTION 1

STUDY DESIGN CONSIDERATIONS 3
- KIND OF SAMPLER 5
- AREA OF SAMPLER 6
- SAMPLE REPLICATION 7
- SIEVE MESH SIZE 7
- SIEVING LOCATION 8
- USE OF RELAXANTS 9
- USE OF STAINS 9
- LEVEL OF TAXONOMY 9
- SAMPLING SEASON 10

PROTOCOLS FOR SAMPLING AND ANALYSIS 12
- FIELD PROCEDURES 12
- Pre-Collection Preparation 12
- Collection 16
- Processing 21
- LABORATORY PROCEDURES 24
- Equipment and Supplies 24
- Preservative Preparation 24
- Analytical Procedures 25
- QA/QC PROCEDURES 30
- Calibration and Preventive Maintenance 30
- Quality Control Checks 31
- Corrective Action 32
- DATA QUALITY AND REPORTING REQUIREMENTS 32

REFERENCES 33

LIST OF FIGURES

Number		Page
1	Construction of a sieve box	13
2	Deployment of a grab sampler	18
3	Examples of acceptable and unacceptable grab samples	20
4	Example of a sieving stand	23

Note: Figures 1, 2, 3 and 4 are not contained in this electronic version. Figures appear on the paper copies accompanying the disks.

LIST OF TABLES

Number Page

TABLE 1. CONTRIBUTORS TO THE BENTHOS PROTOCOLS 2

TABLE 2. SUMMARY OF THE MAJOR STUDY DESIGN CHARACTERISTICS USED MOST FREQUENTLY IN HISTORICAL SURVEYS OF SUBTIDAL BENTHICMACROINVERTEBRATE ASSEMBLAGES IN PUGET SOUND..... 4

ACKNOWLEDGEMENTS

This chapter was prepared by Tetra Tech, Inc., under the direction of Dr. Scott Becker, for the U.S. Environmental Protection Agency in partial fulfillment of Contract No. 68-03-1977, Dr. Thomas Ginn of Tetra Tech was the Program Manager. Mr. John Underwood and Dr. John Armstrong of U.S. EPA were the Project Officers. Much of this chapter was modified from material prepared originally by Tetra Tech, Inc. for the Marine Operations Division, Office of Marine and Estuarine Protection, U.S. EPA, Washington, DC as part of U.S. EPA Contract No. 68-01-6938, Allison J. Duryee, Project Director. The primary authors of this chapter were Drs. Gordon Bilyard and Scott Becker of Tetra Tech, Inc., Mr. Peter Striplin of Evans Hamilton, Inc., and Mr. Jack Word of Battelle Northwest.

INTRODUCTION

Recommended methods for sampling and analyzing subtidal soft-bottom benthic macroinvertebrate assemblages in Puget Sound are presented in this chapter. The methods are based on the results of a workshop and written reviews by representatives from most organizations that fund or conduct environmental studies in Puget Sound (Table 1). The purpose of developing these recommended protocols is to encourage all Puget Sound investigators conducting monitoring programs, baseline surveys, and intensive investigations to use standardized methods whenever possible. If this goal is achieved, most data collected in the Sound should be directly comparable, and thereby capable of being integrated into a sound-wide database. Such a database is necessary for developing and maintaining a comprehensive water quality management program for Puget Sound.

Before the recommended protocols are described, a section is presented on study design considerations. This section discusses some major elements of the design of subtidal benthic macroinvertebrate studies that were considered at the workshop but left unresolved. Following this initial section, specifications are provided for the field, laboratory, quality assurance/quality control (QA/QC), and data reporting procedures that are recommended for most future benthic macroinvertebrate studies in Puget Sound.

Although the following protocols are recommended for most studies conducted in Puget Sound, departures from these methods may be necessary to meet the special requirements of individual projects. If such departures are made, however, the funding agency or investigator should be aware that the resulting data may not be comparable with most other data of that kind. In some instances, data collected using different methods may be compared if the methods are intercalibrated adequately.

TABLE 1. CONTRIBUTORS TO THE BENTHOS PROTOCOLS

Name	Organization
Rick Albright[a]	U.S. EPA
John Armstrong[a]	U.S. EPA
Scott Becker[a,b]	Tetra Tech
Alice Benedict[a]	NOAA
Gordon Bilyard[a]	Tetra Tech
Steven Brocco[a]	Nortec
Peter Chapman[a]	EVS Consultants
Faith Cole[a]	U.S. EPA
Wally De Ben[a]	U.S. EPA
Tom Ginn[a]	Tetra Tech
Evan Hornig[a]	U.S. EPA
David Kendall[a]	U.S. COE
Ed Long[a]	NOAA
Michael Matta[a]	U.S. EPA
Gary Mauseth[a]	Nortec
Brian Melzian	U.S. EPA
Jeff Osborn[a]	Parametrix
John Palmisano[a]	CH_2M HILL
Walter Pearson[a]	Battelle Northwest
Deborah Penry[a]	University of Washington
Tony Roth[a]	Cooper Consultants
Liko Self	University of Washington
Kathy Sercu[a]	U.S. EPA
Craig Smith	University of Washington
Margaret Stinson[a]	Washington Dept. Ecology
Rick Swartz[a]	U.S. EPA
David Terpening[a]	U.S. EPA
Ron Thom[a]	University of Washington
Jeff Ward[a]	URS Engineers
Bert Webber[a]	Western Washington University
Don Weston[a]	SAIC
Jack Word[a]	Battelle Northwest

[a] Attended the workshop held on December 12, 1985.
[b] Workshop moderator.

STUDY DESIGN CONSIDERATIONS

The designs of different benthic macroinvertebrate studies can vary substantially, depending upon study-specific objectives. Therefore, it is not possible to standardize all of the elements that constitute such a study design. Because variations in some of these elements can influence the comparability of different data sets, it is preferable that as many of these elements as possible be similar among studies.

Nine study design elements that may vary among different studies in Puget Sound and may limit data comparability are described in this section. They include:

- Kind of sampler
- Area of sampler
- Sample replication
- Sieve mesh size
- Sieving location
- Use of relaxants
- Use of stains
- Level of taxonomy
- Sampling season.

The specifications for these nine elements that are used most frequently in surveys of subtidal benthic macroinvertebrate assemblages in Puget Sound are summarized in Table 2.

TABLE 2. SUMMARY OF THE MAJOR STUDY DESIGN CHARACTERISTICS USED MOST FREQUENTLY IN HISTORICAL SURVEYS OF SUBTIDAL BENTHICMACROINVERTEBRATE ASSEMBLAGES IN PUGET SOUND

Study Design Variable	Most Common Specification
Kind of sampler	Modified van Veen bottom grab
Area of sampler	0.1 m2
Sample replication[a]	4-5 per station
Sieve mesh size	1.0 mm
Initial sieving location	On vessel
Use of relaxants	No
Use of stains	Yes - rose bengal
Level of taxonomy	Species, if possible
Sampling season	Variable

[a] For variance-related comparisons.

KIND OF SAMPLER

A wide variety of devices can be used to sample benthic macroinvertebrates, including trawls, dredges, grabs, box corers, suction samplers, and hand-held corers (Eleftheriou and Holme 1984). Because most of these devices sample the benthos in a unique manner, comparability of data collected using different devices may be questionable. Trawls and dredges generally collect organisms over a variable and relatively large area. By contrast, the remaining devices generally collect organisms over a fixed and relatively small area. Data collected using the former devices are semi-quantitative at best, and detailed comparisons with data collected using the latter, more quantitative, devices generally are questionable. Differences among data collected using the latter devices generally are more subtle.

The most common device used to sample subtidal soft-bottom benthic macro-invertebrates in Puget Sound is the modified van Veen bottom grab (Kahlsico 1986). Penetration depth (i.e., the maximum depth sampled below the sediment surface) can be as great as 15-16 cm when using this device. The major advantages of this device are its ease of deployment from small vessels, its reliable operation in a wide range of sediment types (from clays through sands), and its frequent use in Puget Sound in the past (affording a large database for comparison). Its principal disadvantages are that its penetration depth varies from sample to sample with sediment properties, that it can land at an angle (providing varying penetration depth within the same sample), and that the sample inevitably is folded by the closing motion and geometry of the device (with resulting loss of information on vertical structure within the sediments).

Most of the disadvantages identified for the van Veen grab are shared by all grabs. The Smith-McIntyre grab's characteristics differ only slightly from those of the van Veen. It is spring loaded and encased in a frame that ensures vertical entry of the grab into the sediments. This combination of features slightly reduces variability in penetration, both within and between samples. Its major disadvantages relative to the van Veen grab are slightly greater difficulty in handling and general lack of intercalibration studies with the more widely used (in Puget Sound) van Veen. No other grabs have been used commonly in the Sound.

Box corers (Hessler and Jumars, 1974; Eleftheriou and Holme, 1984) have a surrounding frame that ensures vertical entry. Although most have stops and weighting systems that allow depth of penetration to be set, most workers adjust the devices for maximum penetration (roughly 45 cm in the most common models) and then slice the resulting core to a standard depth (e.g., 10 cm) for

sieving. Thus, imprecision due to variable penetration depth is much reduced in comparison to grab samples. Using box corers, in situ horizontal partitioning of samples for gaining further spatial information or for unbiased subsampling is routine. Box corers are widely recognized as the tools of choice for maximal accuracy and precision of sampling in soft sediments below diving depths. Their disadvantages are large size and weight, requiring a large vessel for deployment and large expense for construction. In addition, their relatively recent introduction and lack of intercalibration studies with the van Veen grab make comparability with historical data in Puget Sound an issue.

Suction samplers and hand-held corers avoid some of the problems identified for grabs and box corers by being operated in situ using SCUBA. Suction corers can penetrate sediments as deeply as box corers, but they can draw animals (vacuum-cleaner-like) from surrounding sediments, inflating abundance estimates. Some suction methods are extremely rough on organisms, turbulently abrading them with drawn-in sediments. Hand-held corers, on the other hand, are limited in penetration depth. Both kinds of devices are restricted to SCUBA depths and thus are not of general utility in Puget Sound.

AREA OF SAMPLER

Because different species of benthic macroinvertebrates may have different scales of horizontal spatial distribution (Elliott 1971), data comparability generally is enhanced if sampling devices sample the same area of sediment surface. The major reason that trawls and dredges are considered semi-quantitative devices is that they do not sample consistently the same area of sediment surface. Although most grabs and corers sample sediment surface area relatively consistently, comparisons among samples with different surface areas may be questionable. At present, it is uncertain how such comparisons would be affected.

The most common sediment surface area sampled by the quantitative bottom devices used historically in Puget Sound is 0.1 m^2 (van Veen grab, Smith-McIntyre grab). Other surface areas sampled using these devices include 0.06 m^2 (van Veen grab, box corer), 0.002 m^2 (hand-held corer), and 0.001 m^2 (hand-held corer).

SAMPLE REPLICATION

Because the appropriate level of sample replication is determined largely by study objectives, it cannot be standardized for all studies in Puget Sound. Given the potentially large within-station variability of benthic macroinvertebrate assemblages, it generally is advisable to use more than one sample to represent a station. However, single samples may be acceptable for some kinds of investigations, such as preliminary surveys. For statistical comparisons that rely on within-station variance of benthic infaunal variables, Swartz (1978) recommends that five replicates be collected at each station, if possible, and that the minimum number of replicates per station be three. Most historical studies in Puget Sound that have used variance-related statistical analyses have collected four to five replicate samples per station.

SIEVE MESH SIZE

Perhaps more than any of the other elements discussed in this section, the mesh size with which benthic infauna are sieved can limit data comparability among studies (e.g., Reish 1959; Lewis and Stoner 1981; Schwinghamer 1981; Rees 1984). In some cases, study objectives may require that a specific mesh size be used. For example, studies of infaunal recruitment or predation patterns of juvenile fishes generally require very small mesh sizes (i.e., 0.3 mm or smaller). However, in other cases (e.g., general characterization of benthic infaunal assemblages for impact assessment or monitoring), the study objectives do not narrowly constrain the choice of mesh size. Data comparability among such studies can be ensured by using a common mesh size, whenever possible.

The mesh size used most frequently to characterize benthic macroinvertebrate assemblages in Puget Sound is 1.0 mm. A mesh size of 0.5 mm has also been used in a small number of Puget Sound investigations and is commonly used in studies of benthic macroinvertebrates on the east coast of the U.S. Eleftheriou and Holme (1984) recommend that a mesh size of 0.5 mm be used for most macroinvertebrate studies. A major advantage to using a 0.5-mm mesh size rather than a 1.0-mm mesh size is increased retention of total macroinvertebrates (e.g., by a factor of 130-180 percent; Lewis and Stoner 1981), including adults of smaller species and juveniles of larger species (see also Rees 1984). A major disadvantage is increased cost (e.g., by as much as 200 percent) of sample processing (i.e., primarily sorting and taxonomic identifications).

For future characterizations of benthic macroinvertebrate assemblages in Puget Sound, it is recommended that either a 1.0- or 0.5-mm mesh size be used to sieve

samples. If a 0.5-mm mesh size is used, it is recommended that each sample first be screened using a 1.0-mm mesh size and that the two fractions (i.e., 0.5 and 1.0 mm) be processed separately. In this manner, the 1.0-mm results can be compared with data based on a 1.0-mm mesh size from other studies. Data from the two fractions also can be pooled during data analysis to represent the full fraction of organisms >0.5 mm in size.

SIEVING LOCATION

Sieving can be conducted either aboard the survey vessel as samples are collected or onshore after a sampling excursion has been completed. In the first case, sieving usually precedes fixation and is conducted primarily on live organisms. This is the method used by most studies in Puget Sound. In the second case, sieving generally occurs after fixation and is therefore conducted on dead organisms. Comparability between the results of these two techniques may be influenced by at least two factors. First, because fixation may cause some taxa to distort their shape or autotomize (i.e., cast off body parts), the sieving characteristics of those taxa may change following fixation. Second, sieving characteristics of live organisms may differ from those of dead individuals. This bias occurs primarily for soft-bodied organisms (e.g., polychaetes) that can crawl through mesh openings or entangle themselves on the screen when they are sieved live.

A major problem that may be encountered when organisms are fixed in sediment before being sieved is that the fixative either will not reach all buried organisms or will not reach them in time or in sufficient concentration to prevent some deterioration. Because deteriorated individuals may decompose completely or fragment upon sieving, their sieving characteristics can be modified substantially by inadequate fixation. Therefore, if samples are fixed in sediment, extra care should be taken to ensure that organisms are fixed adequately. For example, the sample container can be rotated gently immediately after fixation and again after 12-24 h to ensure adequate fixative penetration.

From a logistical standpoint, sieving of samples in the field is generally preferred for surveys in which a large number of samples are collected during each cruise. Field sieving results in a considerable reduction in the volume of material that must be stored on the vessel (i.e., where space is often limiting) and later transported to the laboratory. Most historical large-scale studies in Puget Sound have sieved samples in the field.

USE OF RELAXANTS

Relaxants are often used when processing benthic macroinvertebrate samples for at least two major reasons. First, relaxants facilitate taxonomic identifications (and morphometric measurements) by reducing the tendency of organisms to distort their shape or autotomize when exposed to a fixative (Gosner 1971). Complete organisms having a natural appearance are easier to identify correctly than are fragmented and/or distorted specimens. For some taxonomic groups (e.g., Maldanidae), complete organisms are required for species-level identification.

A second reason for using a relaxant is to ensure that animals are sieved whole, if sieving follows fixation. The tendency for some taxa (especially polychaetes) to autotomize if not relaxed can influence sieving by reducing the size of individuals.

Because relaxation can influence taxonomic identification and sieving, data comparability between studies that use a relaxant and those that do not use one may be affected. The magnitude of these effects is unknown, but probably is greatest for soft-bodied taxa that are difficult to identify (e.g., some polychaetes) and smallest for taxa encased in a hard enclosure such as a calcareous shell (e.g., most molluscs) or an exoskeleton (e.g., crustaceans), particularly if the hard parts are the primary taxonomic characters used for identification. To date, most studies in Puget Sound have not used a relaxant prior to sieving and fixation.

USE OF STAINS

A vital stain (primarily rose bengal) is often added to samples to facilitate sorting. The stain colors most infauna and thereby enhances their contrast with the debris from which they are sorted. Taxa that do not always stain adequately include ostracods and gastropods.

Some taxonomists have found that staining may interfere with the identification of certain taxa, and therefore discourage its use. Although it generally is agreed that staining aids the sorting process (particularly for inexperienced sorters), a proper quality control program should ensure that sorting efficiency is adequate whether or not staining is used. Most past studies in Puget Sound have used rose bengal stain to facilitate sorting.

LEVEL OF TAXONOMY

Depending on the objectives of different studies, taxonomic identifications can range from the phylum to the species level. Identifications to higher taxonomic

levels can provide gross characterizations of benthic infaunal assemblages, but sacrifice the potential wealth of information available using species-level identifications (e.g., species composition, species indicative of impacted or reference conditions, species diversity and evenness, species replacements, interspecific interactions). The primary drawback to identifying organisms to the species level is cost, which can be 200-300 percent greater than identifications to the two highest taxonomic levels (i.e., phylum and class).

Although data based on different taxonomic levels generally cannot be compared directly, data based on lower taxonomic levels can be pooled upward (e.g., species to genus, genus to family) for comparisons with higher level taxa. Data based on higher-level taxa can be compared with lower-level taxa only if additional taxonomic identifications are made to lower the level of taxonomy of the former data set. Because future comparisons may make it desirable to lower the taxonomic level of a data set, it is strongly recommended that all samples identified only to higher taxonomic levels be properly archived (indefinitely if possible). Most historical studies in Puget Sound have identified organisms to either the species level or the lowest taxonomic level possible (i.e., based on the physical condition of specimens).

SAMPLING SEASON

Benthic assemblages are constantly changing over time. Probably the most common temporal patterns observed in benthic assemblages are those associated with seasonal changes (Gray 1981). Seasonal variation in benthic assemblages can result from changes in physical or chemical environmental variables such as temperature, light, salinity, dissolved oxygen, and habitat disturbance. In general, the influence of these kinds of variables is greatest in shallow water (Gray 1981). Seasonal variation can also result from changes in biological variables (e.g., competition, predation, recruitment).

The season in which benthic assemblages are sampled depends largely on study objectives. Past studies in Puget Sound have sampled benthic assemblages during a variety of time periods. Although seasonal variations of benthic macroinvertebrate assemblages are not well characterized for Puget Sound, information presented by Lie (1968) suggests that both numbers of individuals per sample and variability among stations is lowest during the late winter and highest during the late summer. This pattern may reflect the recruitment cycles of many, but not necessarily all, species. For characterizing adult populations of benthic macroinvertebrates it generally is preferable to sample when population estimates are least variable. Data collected by Lie (1968) suggest that late winter may be the most appropriate time to

sample adult populations of benthic macroinvertebrates in Puget Sound.

Given the seasonal variation characteristic of benthic assemblages in general, it is recommended that direct comparisons between samples collected during different seasons be made with appropriate caution, or avoided completely. Therefore, studies investigating interannual variation in the characteristics of benthic assemblages should be conducted during the same season (preferably the same month) each year.

PROTOCOLS FOR SAMPLING AND ANALYSIS

FIELD PROCEDURES

Pre-Collection Preparation

Construction of Sieve Boxes--

If sieving will be conducted in the field, it is recommended that sieve boxes be used to facilitate processing. Sieve boxes should be sturdy, and have high sides to minimize the possibility of material washing out of the box. They should also be large enough to receive the benthic sample and wash water without completely clogging. Swartz (1978) recommends boxes 40 cm x 40 cm. The boxes should also be constructed to permit nesting of the sieves, especially if more than one mesh size will be used. A typical sieve box might be constructed as shown in Figure 1. Note the application of silicone sealant at the mesh/wood interface. This sealant will prevent organisms from crawling into the space where the mesh enters the box frame. All wood pieces used in construction of the sieve boxes should be treated with fiberglass or epoxy resin (of the types used in boat building), sanded, and painted.

It is imperative that the mesh used in the sieve boxes meet specifications outlined in ASTM E-11, USA Standard Z23.1, AASHO M92, and Fed. Spec. RR-S-366b. Such mesh is available from scientific supply houses. Inferior mesh will not have uniform openings and will not be durable.

Before each sample is sieved, all sieves should be examined for damage and wear. Look for rips in the mesh, irregular mesh spacing, and sand grains caught in the mesh. Use water pressure or a nylon brush to dislodge the sand. Do not use sharp objects or stiff brushes, as the mesh may be damaged or the mesh spacing may be altered.

Fixative Preparation--

The fixative most commonly used for benthic macroinvertebrate samples is formalin, an aqueous solution of formaldehyde gas. Under no circumstances should ethyl or isopropyl alcohol (i.e., preservatives) be used in place of the formalin. Penetration of the alcohol into body tissues is too slow to prevent decomposition of the specimens.

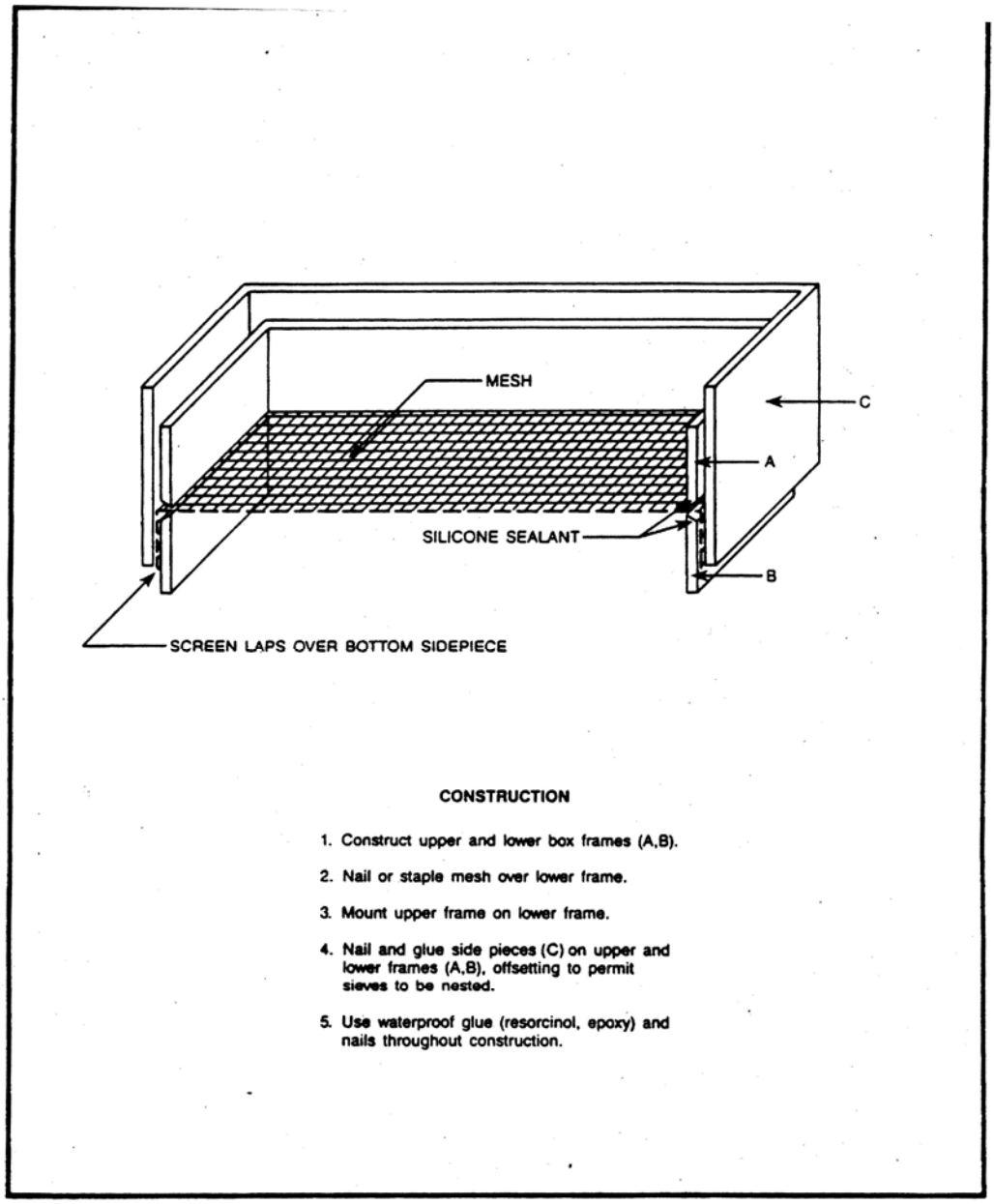

Figure 1. Construction of a sieve box.

Caution should be exercised when handling formalin mixtures because formalin is toxic and carcinogenic (Kitchens et al. 1976). It can cause irritation to the eyes, nose, and throat at concentrations as low as 1 ppm. Sensitivity in humans varies with the individual, but in general, the detection limit is around 2 ppm. Anyone working with formalin mixtures should therefore wear protective clothing, rubber gloves, and safety goggles, and should work under a properly ventilated fume hood. A protective vapor mask should be worn, even if working near open windows or under a ventilation hood.

Formalin solutions of 5-20 percent (v/v) strength are recommended for fixing marine organisms (Gosner 1971; Birkett and McIntyre 1971; Smith and Carlton 1975; Swartz 1978). Solutions of 10-15 percent are used most commonly. It is recommended that at least 2 L of diluted formalin solution be on hand for each replicate sample to be collected, unless experience has shown otherwise.

The formalin solution should always be buffered to reduce acidity. Failure to buffer may result in decalcification of molluscs and echinoderms. Ideally, pH should be at least 8.2, as calcium carbonate dissolves in more acidic solutions. Borax (sodium borate, $Na_2B_40_7$) should be used as the buffer because other buffering agents may hinder identification by leaving a precipitate on body tissues and setae.

To prepare a 10-percent buffered formalin solution, add 4 oz of borax to each gallon of concentrated formalin (i.e., a 40-percent solution of formaldehyde in water). This amount will be in excess, so use the clear supernatant when making seawater dilutions. Dilute the concentrate to a ratio of one part concentrated formalin to nine parts seawater. Seawater will further buffer the solution. Seawater also makes the fixative isotonic with the tissues of the animals, thereby decreasing the potential for animal tissues to swell and break apart, as often happens with freshwater dilutions of formalin.

It is recommended that fresh fixative be prepared prior to each sampling excursion, as formalin will eventually consume all the buffering capacity of the borax. Formalin solution of any strength should not be exposed to freezing temperatures, because the formaldehyde polymers will degrade into paraformaldehyde and the solution will have to be discarded.

Rose Bengal Preparation--

If staining is used, rose bengal may be added to samples either as a powder or a

solution. Both are effective. However, it is easier, and perhaps less expensive, to use a solution. A rose bengal concentration of 4 g/L of concentrated formalin commonly is used (Eleftheriou and Holme 1984).

Relaxant Preparation--

If a relaxant is to be used, several kinds are available for use with benthic organisms. However, a solution of magnesium chloride in tap water is effective on a wide variety of taxa (Gosner 1971), and is easily prepared and used. The $MgCl_2$ solution should be isotonic with seawater. To prepare, dissolve 73 g $MgCl_2 \cdot 6H_20$ per liter of tap water. Anhydrous $MgCl_2$ can be purchased (optionally and at a considerably higher cost) and used to prepare the relaxant solution. However, accurate determinations of mass are very difficult because of the propensity of the crystals to absorb atmospheric moisture. Hence, use of the hydrated form is recommended.

Sample Containers--

Samples can be stored in a variety of containers including glass or plastic jars, and plastic or muslin bags. If jars are used, plastic lids are preferable to metal lids because formalin corrodes metal. If glass jars are used, extra care should be taken when handling, shipping, and storing them to prevent breakage. If plastic or muslin bags are used, extra care should be taken to prevent them from tearing.

In general, a single 1- or 2-quart container is large enough to hold a sieved sample from a 0.1-m^2 sampler. However, more or larger containers may be required if large quantities of gravel, peat, wood chips, or other large items occur in the sample.

Labels--

A complete label should be placed inside each sample container, as well as on the side of each container. An abbreviated label may be placed on the caps of jars to identify them when in shipping or storage cases. All labels should be waterproof and preprinted. The internal label should be made of at least 100 percent waterproof rag paper and the external labels should be gummed. External labels may be filled out using waterproof ink, but internal labels should be filled out using only a pencil.

Collection

Design of Sampler--

Collection of an acceptable sediment sample for infaunal analysis generally requires that the sampler 1) create a minimal bow wake when descending, 2) form a leakproof seal when the sample is taken, and 3) prevent winnowing (i.e., loss of fine-grained material) and excessive sample disturbance when ascending. A desirable feature of a sampler is easy access to the sample surface. Reduction of the bow wake is critical to ensuring that small, lightweight, surface-dwelling organisms are not blown away before the sampler contacts the sediment. A leakproof seal is necessary to ensure that organisms are not lost when the sampler is being retrieved. Preventing sample disturbance is necessary for accurately characterizing the sediment and measuring penetration depth. Easy access to the sample surface facilitates sediment characterization and measurement of penetration depth.

The bow wake of several kinds of sampler is reduced by having hinged solid doors or rubber flaps cover the open upper face of the device. The rubber flaps generally cover screened doors, which prevent organisms from escaping as the sampler is retrieved. Upon descent of the sampler, the solid doors or rubber flaps are cocked open or held open by water pressure. Upon ascent, the solid doors are held closed by springs or elastic cords, whereas the rubber flaps are held closed by water pressure.

Although most samplers seal adequately when purchased, the wear and tear of repeated field use eventually reduces this sealing ability. A sampler should therefore be monitored constantly for sample leakage. If unacceptable leakage occurs, the sampler should be repaired or replaced. If a sampler is to be borrowed or leased for a project, its sealing ability should be confirmed prior to sampling. Also, it is prudent to have a back-up sampler on board the survey vessel in case the primary sampler begins leaking during a cruise.

Penetration depth (i.e., maximum distance below the sediment surface that is sampled) generally varies with sediment character for most samplers, being greatest in fine-grained sediments and least in coarse-grained sediments. The penetration depth achieved by a particular sampler can often be increased by attaching lead weights to the device.

Operation of the Sampler--

The sampler should be attached to the hydrowire using a ball-bearing swivel (Figure 2). The swivel will minimize the twisting forces on the sampler during deployment and ensure that proper contact is made with the bottom. For safety, the hydrowire, swivel, and all shackles should have a load capacity at least 3 times greater than the weight of a full sampler.

The sampler should be deployed and retrieved with a minimum amount of swinging when out of the water. Excessive swinging can cause the sampler to trigger prematurely upon deployment and can disturb the sediment sample upon retrieval. Swinging can be minimized by heading the survey vessel into any waves when the sampler is out of the water and by attaching handling lines to the cable that can then be operated by the sampling team (Figure 2).

Because form drag and skin friction of the sampler can produce a bow wave when the device is lowered too quickly, it is essential that the sample enter the sediment at a relatively slow speed. It is recommended that the lowering speed at sediment entry be ≤0.3 m/sec (≤1 ft/sec). Lowering rates through the water column can be much faster until several meters from the bottom, as long as the speed at sediment entry is ≤0.3 m/sec. Entry at faster speeds requires demonstration that bow waves are not a problem. Swell and chop can significantly degrade samples due to effects on entry speed (i.e., vertical ship motion alternately adds to and subtracts from entry velocity). These additional factors must therefore be taken into account when they are present.

After the sampler has contacted the bottom, it initially should be retrieved slowly to permit the device to close properly. After the jaws are closed, a constant retrieval speed should be maintained to avoid jerking the sampler and possibly disturbing the sample. When the sampler approaches the water surface (i.e., when first sighted), the winch should be stopped to permit the handling lines to be clipped onto the cable. The sampler can then be raised slowly, and the handling lines can be used to minimize swinging of the device. When brought on board, the sampler should be properly secured as soon as possible.

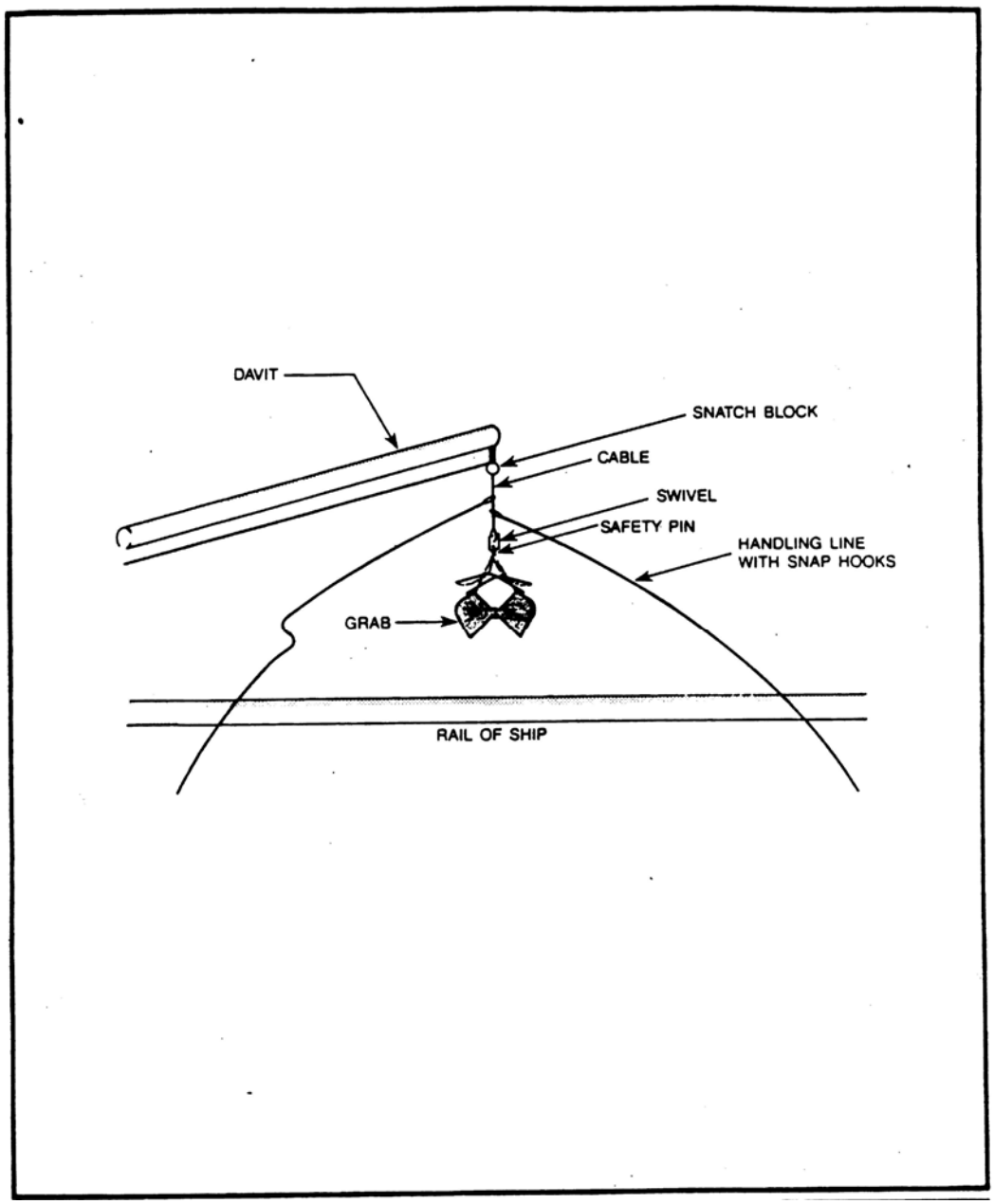

Figure 2. Deployment of a grab sampler.

Sample Acceptability Criteria--

After the sampler has been secured, the sediment sample should be inspected carefully before being accepted. The following acceptability criteria should be satisfied:

- Sediment is not extruded from the upper face of the sampler such that organisms may have been lost

- Overlying water is present (indicates minimal leakage)

- The sediment surface is relatively flat (indicates minimal disturbance or winnowing)

- The entire surface of the sample is included in the sampler

- The following penetration depths (i.e., the maximum depth of sediment sampled) are achieved at a minimum

  - 4-5 cm for medium-coarse sand
  - 6-7 cm for fine sand
  - ≥10 cm for muddy sediment.

If a sample does not meet any one of these criteria, it should be rejected. Examples of some acceptable and unacceptable grab samples are presented in Figure 3.

Sample Characterization--

After a sample is judged acceptable, the following observations should be noted on the field log sheet:

- Station location

- Depth

- Gross characteristics of the surficial sediment

  - Texture
  - Color
  - Biological structures (e.g., shells, tubes, macrophytes)

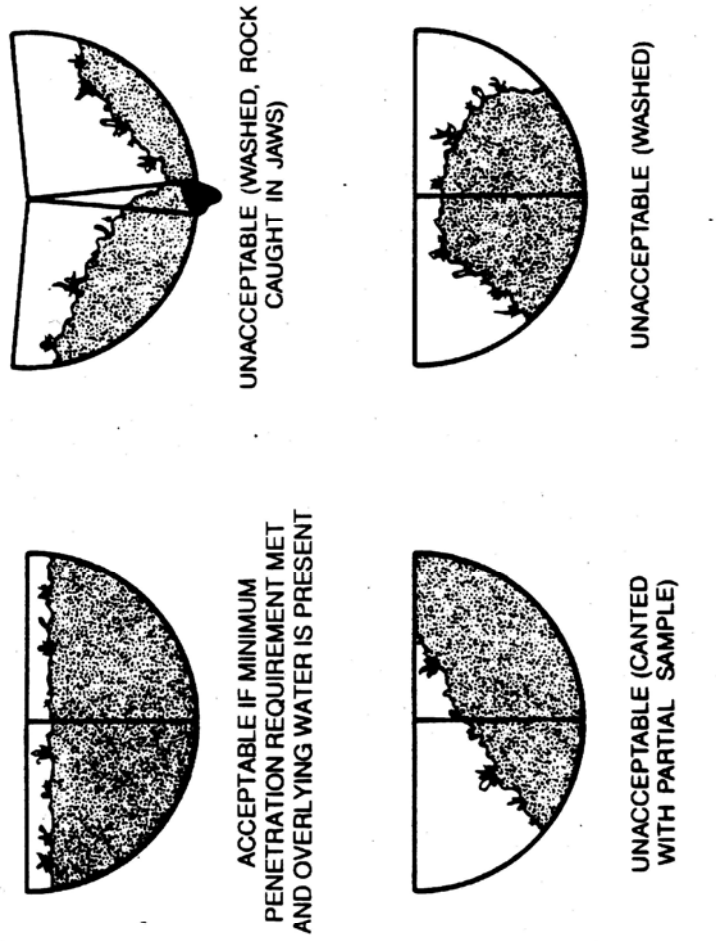

Figure 3. Examples of acceptable and unacceptable grab samples.

- Presence of debris (e.g., wood chips, wood fibers, manmade debris)
  - Presence of oily sheen
  - Odor (e.g., hydrogen sulfide, oil, creosote)

- Gross characteristics of the vertical profile

  - Changes in sediment characteristics
  - Presence and depth of redox potential discontinuity (rpd) layer (if visible)

- Maximum penetration depth (nearest 0.5 cm)

- Comments relative to sample quality

  - Leakage
  - Winnowing
  - Disturbance.

Processing

It is recommended that the entire sample be sieved for benthic infaunal analyses. If subsamples are removed for physical or chemical analyses, they should be very small relative to the size of the entire sample (i.e., _5 percent) because organisms would be lost from the sample in the process. If large numbers of organisms are lost at this stage, subsequent abundance determinations could be biased substantially. Subsamples, other than those made in situ by box-core partitions, are not recommended for benthic infaunal analyses because it is unknown what effect the sampling process has on the spatial distribution of motile organisms. For example, suface-dwelling organisms may move to the edges of the sample as the grab is being retrieved. If the sampling process disrupts the natural spatial patterns of the organisms, collection of a representative subsample for infaunal analysis may not be possible.

After qualitative characteristics of the sample have been recorded, sediments should be washed on the designated sieve(s). Sediment adhering to the outside of the sampler should not be mixed with the sample. When being sieved, sediments may be gently sprayed with water from above, gently agitated by hand in a washtub of water (in an up-and-down, not swirling, motion), or washed using a combination of these techniques. For all methods, it is imperative that the samples be washed gently to minimize specimen damage. A few minutes extra care in the field can save hours of time for the taxonomist, and will result in a better data set.

For many surveys, it is easiest to wash the samples from above with a gentle spray, because efficient, easy-to-use gear may be constructed to hold the sampler and sieve boxes. An example of a stand designed to hold a van Veen grab is shown in Figure 4. The top section is designed to accept the grab sampler. Wash water and sediment drain through the openings in the bottom of the top tray and into the lower section of the sieving stand, where the screen box(es) is (are) located.

All wash water should be filtered (using a cartridge-filter system) or screened through mesh with openings less than one-half the size of those used in the survey, so as not to introduce planktonic or bentho-pelagic organisms into the samples. Failure to screen in this way can result in increased sorting time. It can also compromise the quality of the resulting data, because it is impossible to distinguish bentho-pelagic organisms caught by the grab from those entrained in the wash water.

Sieving stands should have attachment points (e.g., eyebolts) at appropriate places with which the stand may be lashed to the deck or rail. As shown in Figure 4, all wastewater should exit the sieve tray via a spout, to which a hose can be attached. The wash water can then be discharged overboard through a scupper. This is especially important in cold weather, when wash water may otherwise freeze on the deck and safety may be compromised.

Once sieving is completed, the screen box should be held at an angle and the remaining material gently washed into one corner. The sample may then be transferred to a container for relaxation, if desired, or for immediate fixation, using as little water as possible. Place a permanent internal sample label in the container at this time. If more than one screen fraction is generated, be sure to keep them separate throughout all phases of field and laboratory processing. Be sure to check the screen for organisms trapped in (or wound around) the mesh wires. If they cannot be dislodged with gentle water pressure, use a pair of jewelers forceps. Be careful not to damage the wire mesh. After the screen has been checked for remaining animals and sample removal is complete, back-wash the screen with a high- pressure spray to dislodge any sediment grains that may be caught in the mesh.

As mentioned earlier, a 10-15 percent solution of borax-buffered formalin usually is sufficient to fix benthic organisms. However, samples containing large amounts of fine-grained sediments, peat, or woody plant material may require higher concentrations. The volume of fixative should be at least twice the volume occupied by the sample. The formalin solution should be added to the sample container until it is completely filled. This will minimize abrasion during shipping

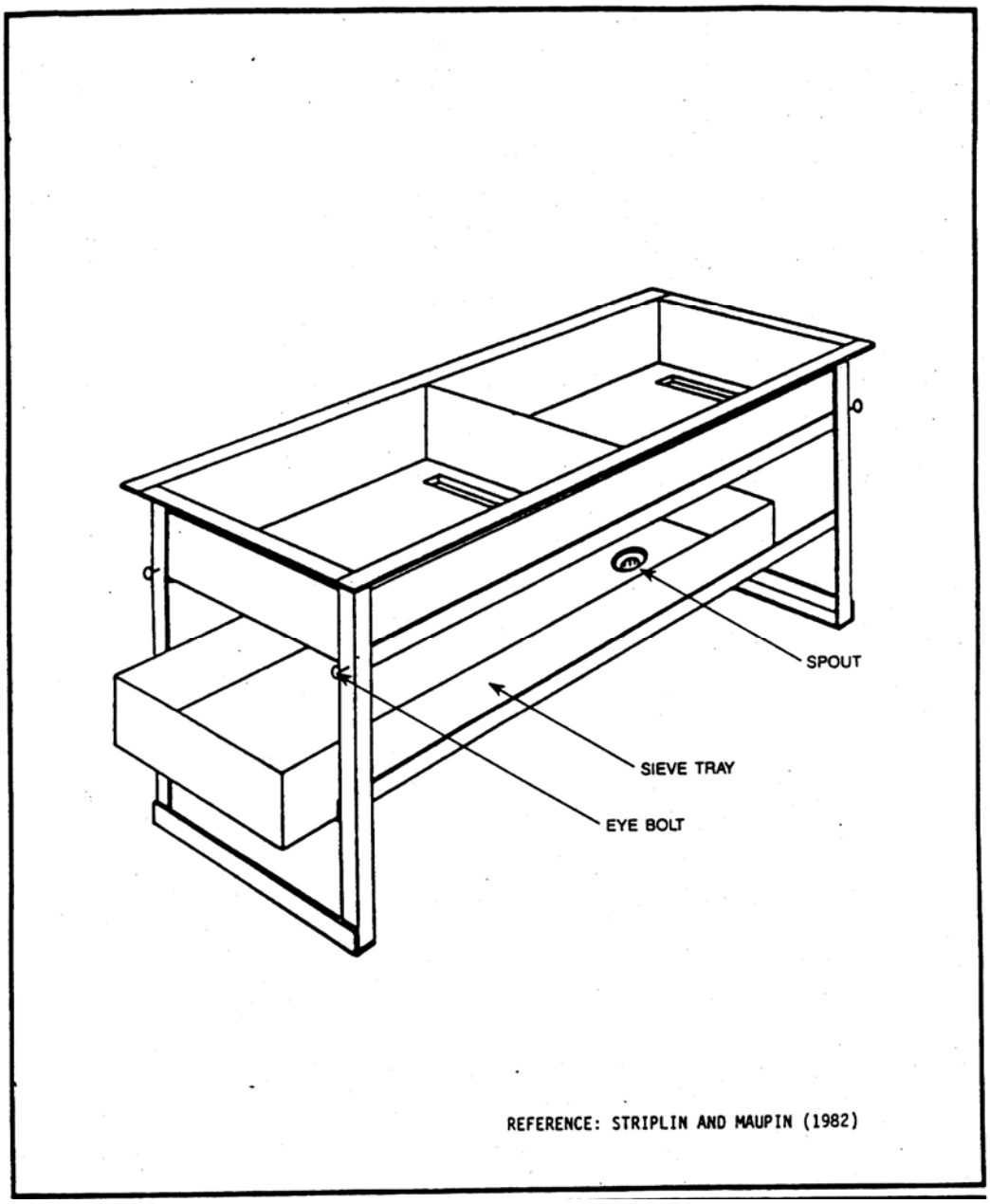

Figure 4. Example of a sieving stand. Screen boxes (not shown) are placed in sieve tray.

and handling. If the sample volume exceeds one half of the container volume, more than one container should be used. Use of multiple containers for single samples should be recorded on the log sheet.

After fixative has been added to a sample container, it is critical that the contents be mixed adequately. This usually can be accomplished by inverting the container several times. After mixing, sample containers should be placed in protective containers for storage and transport to the laboratory. After being stored for approximately 1 h, samples should be inverted several times again to ensure adequate mixing.

On board ship, samples should be stored so as to minimize exposure to sunlight and temperature extremes. They should also be stored in a stable part of the ship to minimize agitation.

LABORATORY PROCEDURES

Equipment and Supplies

The laboratory should be equipped with both stereo dissection and compound microscopes. Magnifying lamps also can be available for sorting samples. Compound microscopes should be capable of magnifications up to 1,000-power. The optics of the dissection and compound microscopes should be of the highest quality. Apparent savings realized by purchasing lower quality optics are quickly consumed by increased labor costs during the sorting and identification processes. The probability of misidentifying organisms also is increased. Other recommended laboratory supplies include jewelers forceps, fine scissors, small scalpels, fine needles, flat and depression microscope slides, cover slips, small dissection trays, immersion oil, and glycerol alcohol (half glycerol and half 70-percent alcohol).

Preservative Preparation

After the specimens are fixed, alcohol should be used as a long-term preservative. Either 70-percent ethanol (v/v) in water or 70-percent isopropanol (v/v) may be used (Fauchald 1977). Although isopropanol is less expensive than ethanol, it is more unpleasant to work with. Specimens preserved in isopropanol are unsuitable for histological examination. If future studies of anatomy or reproductive biology are anticipated, ethanol should be used.

It is most cost-effective to purchase isopropanol and ethanol in bulk solutions of 5-percent water and 95-percent alcohol. Purer grades are available, but more costly.

To prepare 1 L of a 70-percent solution of either alcohol, add 263 mL of water to 737 mL of 95-percent alcohol solution. It may be necessary to use distilled water to dilute the alcohol solution, because hard water mixed with alcohol creates a milky precipitate that makes examination of the samples difficult.

Use of the 70-percent alcohol/30-percent water solution is adequate for the preservation of most infaunal organisms (Fauchald 1977; Eleftheriou and Holme 1984). For long-term storage of crustaceans, however, it is recommended that glycerine be substituted for some of the water. The glycerine helps keep the exoskeletons supple, thereby facilitating examination and manipulation. This is especially critical for crustaceans archived in the reference collection (see below). An appropriate alcohol-glycerine solution would be 70-percent alcohol, 25-percent water, and 5-percent glycerine (Eleftheriou and Holme 1984).

Analytical Procedures

Transfer to Alcohol--

Samples should remain in the formalin-seawater solution for a minimum of 24 h to allow proper fixation (Fauchald 1977). A maximum fixation period of 7-10 days is recommended to reduce the risk of decalcifying molluscs and echinoderms. After fixation, the samples should be washed (i.e., rescreened) on a sieve with mesh openings half the size (at most) of those used in the field. The smaller screen size ensures that specimens collected in the field will be retained in the sample regardless of shrinkage or breakage resulting from contact with the formalin. It is desirable to wash the formalin from the samples as soon as possible after the initial 24 h, because the buffering capacity of the borax in the formalin solution decreases continually.

If the sample consists of multiple containers, locate all containers prior to rescreening and wash them at the same time. Carefully pour the contents of each container into the appropriately sized screen and rinse the container to remove adhering organic material, sediment, or organisms. Do not fill the screen more than half full to avoid spilling or splashing the sample.

As mentioned earlier, caution should be exercised when handling formalin mixtures because formalin is toxic and carcinogenic (Kitchens et al. 1976). It can cause irritation to the eyes, nose, and throat at concentrations as low as 1.0 ppm. Sensitivity in humans varies with the individual, but in general, the detection limit is around 2 ppm. Therefore, by the time formalin generally is detected, it has already

caused some irritation. The technician doing the rescreening should wear protective clothing, rubber gloves, and safety goggles, and should work under a properly ventilated fume hood. A protective vapor mask should be worn, even if working near open windows or under a ventilation hood.

There are several acceptable methods for rinsing formalin from a sample. One method is to gently flush the sample with large quantities of fresh water from a low-pressure faucet or hose, being careful not to splash any sample material. A second method is to partly immerse the sieve in a plastic tub filled with fresh water and wash the sample by moving the sieve in an up and down motion. Care must be taken not to let the water rise above the top level of the sieve.

Allow the rinse water to completely drain from the sieve and lightly rinse the sample with a solution of 70-percent ethanol from a squirt bottle. Carefully wash the sample material into a sample jar filling it no more than three-quarters full. Rinse the last bit of material into the jar using the squirt bottle of alcohol. Fill the jar to the top with the 70-percent alcohol solution and screw the lid on tightly. Gently shake and invert the jar several times to ensure proper mixing.

Each jar should have one internal label and two external labels. The internal label should be made of waterproof, 100-percent (at least) rag paper and filled out using a pencil. Paper with less than a 100-percent rag content or that is not waterproofed will disintegrate in the 70-percent alcohol mixture. The two external labels should be preprinted and should be labeled with an indelible marking pen. One label should be attached to the side of the jar and the second should be attached to the lid of the jar. All three labels should include all information recorded on the field data tag, plus all other information needed to ensure proper identification of the sample.

Keep all jars of a given sample together (if more than one), and all replicate samples from a given station together. As the samples are shelved prior to sorting, each should be cross-referenced to the field log sheet. At this point the sample custodian should date and initial the rescreening section of the sample tracking form for each station. Store washed samples in an upright position at a cool temperature, and away from direct sunlight. Storage should be in a secure place, where sample containers are not exposed to breakage, and samples should be checked periodically to ensure that adequate levels of preservative are maintained.

Sample Sorting--

Several techniques can be used to sort organisms from sediment. The most common technique involves placing a small amount of the sample into a glass or plastic petri dish and using a pair of jewelers forceps to sort through the sample in a systematic manner, removing each organism. This entire process should be done while viewing the sample through a 10-power dissecting microscope or a magnifying lamp. Care must be taken that enough liquid is present in the petri dish to completely cover the sample; otherwise, reflections from the sediment/liquid interface will cause distortions and the sorter may miss some organisms. Each petri dish of material should be sorted twice to be sure that all organisms are removed.

A second sorting technique is a flotation method, which is particularly effective when the sediment residue is primarily coarse sediment grains containing small amounts of organic matter (e.g., wood fragments, leaf debris, sewage sludge). The sample is first washed with fresh water in a large flat tray. The less dense material that becomes suspended in the fresh water (organic material, arthropods, and most soft-bodied organisms) is carefully poured into a sieve, and is sorted using the standard technique described above. The remaining material is covered with liquid and sorted using a 5-power self-illuminated hand lens. Organisms remaining in this portion of the sample generally include molluscs and some tube-dwelling or encrusting organisms that are associated with sand grains. Because it is difficult to see extremely small organisms with the 5-power hand lens, the sorter must remove all molluscs and polychaete tube fragments for closer inspection. All material collected from this portion is placed into a labeled sample jar and viewed under a 10-power dissecting microscope to remove organisms from tubes and to ensure that the molluscs were alive when captured.

Whichever technique is used, the sorter is exposed to alcohol fumes. Because these fumes can be irritating to some people, the sorting process can be done using fresh water. However, as each portion of the sample is sorted, it should be drained and returned to the alcohol solution immediately.

Each sample should be sorted by <u>only</u> <u>one</u> <u>person</u>. At a minimum, organisms should be sorted into the following major taxonomic groups: Annelida, Arthropoda, Mollusca, Echinodermata, and miscellaneous phyla (combined). All organisms should be placed in large vials containing 70-percent alcohol solution. The exception is Ophiuroidea, which require air-drying for identification. Removal of the majority of arms from certain Ophiuroidea (e.g., Amphiuridae) permits easier identification. This preparation may be performed by experienced sorters to minimize identification time. Special handling of Ophiuroidea should be conducted

after biomass analyses, if biomass analyses are performed. Each vial containing a major taxonomic group should have an internal label listing the survey name, station designation, water depth, date sampled, and field screen size. All vials from the same sample should be stored in a common container and immersed in the 70-percent alcohol solution. To reduce evaporation of alcohol, vial and container lids can be sealed with plastic tape.

Biomass Determination--

When required, biomass estimates for the major taxonomic groups should be made prior to identifying the organisms to the species level. It is recommended, however, that taxonomists examine the major taxonomic groups before biomass measurements are made, to ensure that sorters have correctly grouped all individuals and fragments and that the remains of dead organisms (e.g., empty mollusc shells) are not included. Biomass should be estimated to the nearest 0.1 g (wet weight). All specimens of taxa within the following major groups should be composited for biomass analyses: Annelida (principally polychaete worms), Mollusca (principally bivalves, gastropods and aplacophorans), Arthropoda (principally crustaceans), Echinodermata (principally asteroids, ophiuroids, echinoids, and holothuroids), and miscellaneous taxa (combined). These five categories generally are adequate to characterize the standing stocks of the major infaunal groups. They also are sufficiently distinct from each other to permit proper assignment of fragments to each of the groups. All fragments should be placed in their respective major taxonomic groups prior to weighing.

There are several major problems associated with the collection and interpretation of biomass information. Some taxa lose weight when immersed in preservative fluids, while others gain weight (Howmiller 1972; Lappalainen and Kangas 1975; Wiederholm and Eriksson 1977; Mills et al. 1982). For this reason, the most accurate biomass estimates are performed on live material. However, it is rarely practical to sort and weigh live specimens. Accurate measurements of biomass may be compromised further by evaporation from the specimens while they are on the balance. Lastly, biomass measurements are only estimates of standing crop. They do not reflect estimates of production because all organisms are treated in the same manner whether they are large and long-lived, or small and short-lived. Because of these problems, biomass measurements should be interpreted carefully.

Several methods of measuring biomass are possible. One technique is to estimate the difference in weight of a tared beaker filled with preservative before and after organisms are placed in the beaker. The individual organisms are not blotted prior to weighing, and as few individuals as possible are transferred to the

weighing container. These procedures minimize the transfer of fluids held within a pile of individuals. This technique can be used for preserved or live animals, and appears to introduce the least amount of variation into the weighing process.

A second technique for biomass determination consists of air-drying the organisms on absorbent paper for a specific length of time (e.g., 5 min). Because 70-percent ethanol is volatile, small variations in drying time may increase the errors associated with the weight measurements. A container open at one end and covered at the other end with a 0.25-mm mesh screen (maximum mesh opening) can be used to hold the organisms for weighing. After the tare weight of the container is measured, the animals are carefully placed into the container. The container with organisms is then placed on a paper towel and allowed to air dry for exactly 5 min prior to weighing. The weight of the organisms is obtained by subtracting the weight of the container with the organisms from the tare weight of the container. Extremely large organisms (e.g., large molluscs or asteroids) should be weighed individually.

Taxonomic Identification--

After biomass estimates are completed, identification and counting of the organisms may begin. Unless otherwise specified, identifications should be to the lowest taxonomic level possible, usually the species level. For incomplete specimens, enumerate only the anterior or posterior ends, depending upon the taxon. All identifications should be made using binocular dissecting or compound microscopes. If possible, at least two pieces of literature should be used for each species identification. Moreover, each species identification should be checked against a reference specimen from a verified reference collection (see QA/QC Procedures).

After completing taxonomic identifications, all organisms should be placed in vials containing 70-percent alcohol. All vials for a single sample should be stored in common jars and immersed in 70-percent alcohol. Each vial should contain an internal label with the following information: survey name, station number, replicate number, collection gear, water depth, and date of collection. Any specimens removed from the sample jar and placed in the reference collection should be so noted (species, number) on the sample identification sheet.

Each taxonomist should record initial identifications and counts in a notebook, which should also include notes and comments on the organisms in each sample. Upon completion of the sample, the data should be transferred to the sample data sheets and double-checked. The taxonomist should then sign and date the sample

data sheet. All notebooks should be kept in the laboratory at all times so the laboratory supervisor can check questionable identifications and follow the progress of each sample.

QA/QC PROCEDURES

Calibration and Preventive Maintenance

The analytical balance used for biomass determinations should be calibrated weekly, at a minimum. The balance and all microscopes should be serviced at regular intervals. Annual service and inspection is adequate in most cases, unless the manufacturer recommends otherwise.

Taxonomic identifications should be consistent within a given laboratory, and with the identifications of other regional laboratories. To that end, at least three individuals of each taxon should be sent for verification to recognized experts. The verified specimens should then be placed in a permanent reference collection. Continued collection of a verified species does not require additional expert verification, because the reference collection can be used to confirm the identification. Participation of the laboratory staff in a regional taxonomic standardization program (if available) is recommended, to ensure regional consistency and accuracy of identifications.

All specimens in the reference collection should be held in labeled vials that are segregated by species and sample. For example, there may be three labeled vials of Gemma gemma, one from each of three samples. More than one specimen may be in each vial. The labels placed in these vials should be the same as those used for specimens in the sample jars. It is important to complete these labels, because future workers may not be familiar with the survey, station locations, and other details of the work in progress. In addition, the reverse side of the label should contain information about the confirmation of the identification by experts in museums or other institutions (if appropriate). Such information would include the name and institution of the outside expert, and date of verification. All vials for a given species should be placed in a single jar filled with alcohol. To reduce evaporation of alcohol, the lids of vials and jars can be sealed with plastic tape wrapped in a clockwise direction. The species (or other taxonomic designation) should be written clearly on the outside and on an internal label. Reference specimens should be archived alphabetically within major taxonomic groups. A listing of each species name, the name and affiliation of the person who verified the identification, the location of the individual specimen in the museum, the status of the sample if it has been loaned to outside experts, and references to pertinent literature should be maintained by the laboratory performing the identifications.

Reference specimens are invaluable, and should be retained at the location where the identifications were performed, in the offices of the funding agencies, or at a museum with long-term storage capabilities. In no instance should this portion of the collection be destroyed. A single person should be identified as the curator of the museum collection and should be responsible for its integrity. Its upkeep will require periodic checking to ensure that alcohol levels are adequate. When refilling the jars, it is advisable to use full-strength alcohol (i.e., 95 percent), because the alcohol in the 70-percent solution will tend to evaporate more rapidly than the water.

Quality Control Checks

It is recommended that at least 20 percent of each sample be re-sorted for QA/QC purposes. Re-sorting is the examination of a sample or subsample that has been sorted once and is considered free of organisms. The 20- percent aliquot should be taken after the entire sample has been spread out in a pan or tray. It is critical that the aliquot be a representative subsample of the total sample. Care should be taken to include any organisms that may be floating in the preservative. Re-sorting should be conducted using a dissection microscope capable of magnification to 25-power. A partial re-sorting of every sample should ensure that all gross sorting errors are detected. In addition, it should give added incentive to sorters to process every sample accurately. Re-sorting should be conducted by an individual other than the one who sorted the original sample.

In addition to efficient sample sorting, consistent identification of organisms among individuals and among sampling programs are critical to the collection of high quality data. Consistent identifications are achieved by implementing the procedures discussed below and by maintaining informal, but constant, interaction among the taxonomists working on each major group. One important procedure is to verify identifications by comparison with the reference collection. To ensure that identifications are correct and consistent, 5 percent of all samples identified by one taxonomist should be re-identified by another taxonomist who is also qualified to identify organisms in that major taxonomic group. It is the duty of the senior taxonomist to decide upon the proper identification(s). The senior taxonomist may also decide whether the taxonomic level to which a given organism is identified is appropriate. If it is not, the senior taxonomist may decide to drop back to a higher taxonomic level, or to further refine the taxonomy of that group through additional study.

When all identification and QA/QC procedures are completed, the jars containing the vials of identified species should be topped off with 5- percent

glycerine/70-percent alcohol. The lids should then be sealed tightly with black electrical tape to prevent evaporation. All sample jars should be placed in containers filled with 70-percent alcohol for long-term storage. The containers should be fitted with a tightly sealed lid, and electrical tape should again be used to seal the joints. Each container should be labeled clearly with the survey name, date, and number and type of samples within it.

Corrective Action

Following QA/QC procedures discussed earlier, each 20-percent sample aliquot should be checked for complete or nearly complete removal of organisms. Thus, each sample elicits a decision concerning a possible re-sort. When a sample is found that does not meet the recommended 95-percent removal criterion (see Data Quality and Reporting Requirements below), it should be re-sorted.

When a taxonomic error or inconsistency is found, it is necessary to trace all of the work of the taxonomist responsible for the error, so as to identify those samples into which the specific error or inconsistency may have been introduced. This process can be very time-consuming. However, upon completion of all taxonomic work, few (if any) taxonomic errors or inconsistencies should remain in the data set. Avoiding errors and inconsistencies through the constant interchange of information and ideas among taxonomists is the best way to minimize lost time due to faulty identification.

DATA QUALITY AND REPORTING REQUIREMENTS

A sample sorting efficiency of 95 percent of total number of individuals generally is considered acceptable. That is, no more than five percent of the organisms in a given sample are missed by the sorter. Similarly, species identifications by each taxonomist can reasonably be expected to be accurate for at least 95 percent of the total number of species. Unless otherwise specified, all organisms should be identified to the lowest possible taxon; to species level whenever possible. In cases where the identity of a species is uncertain, a species number will suffice (e.g., Macoma sp.1, Macoma sp.2). Numerical designations must be consistent throughout each study. To facilitate comparability among different studies, the distinguishing characteristics of each unidentified species should be recorded. Data for each replicate sample should be reported as numbers of individuals per sample for each species and as biomass (nearest 0.1-g wet weight per sample) for each major taxonomic group.

REFERENCES

Birkett, L., and A.D. McIntyre. 1971. Treatment and sorting samples. pp. 156-168. In: Methods for Study of Marine Benthos. N.A. Holme and A.D. McIntyre (eds). IBP Handbook No. 16. Blackwell Scientific Publications, Oxford, UK.

Eleftheriou, A., and N.A. Holme. 1984. Macrofauna techniques. pp. 140-216. In: Methods for the Study of Marine Benthos. N.A. Holme and A.D. McIntyre (eds). Blackwell Scientific Publications, London.

Elliott, J.M. 1971. Some methods for the statistical analysis of samples of benthic invertebrates. Scientific Publication No. 25, Freshwater Biological Assn., Ferry House, UK. 148 pp.

Fauchald, K. 1977. The polychaete worms; definitions and keys to the orders, families, and genera. Science Series 28. Natural History Museum of Los Angeles County. Los Angeles, CA. 188 pp.

Gosner, K.L. 1971. Guide to identification of marine and estuarine invertebrates. Wiley-Interscience, New York, NY. 693 pp.

Gray, J.S. 1981. The ecology of marine sediments. Cambridge University Press, London. 185 pp.

Hessler, R.R., and P.A. Jumars. 1974. Abyssal community analysis from replicate box cores in the central North Pacific. Deep-Sea Res. 21:185-209.

Howmiller, R.P. 1972. Effects of preservatives on weights of some common macrobenthic invertebrates. Trans Am. Fish. Soc. 101:743-746.

Kahlsico. 1986. Catalogue for Kahl Scientific Instrument Corporation. P.O. Box 947, El Cajon, CA 92022.

Kitchens, J.F., R.E. Casner, G.S. Edwards, W.E. Harward III, and B.J. Macri. 1976. Investigation of selected potential environmental contaminants: formaldehyde. EPA-560/2-76-009. U.S. Environmental Protection Agency, Washington, DC.

Lappalainen, A., and P. Kangas. 1975. Littoral benthos of the northern Baltic Sea. II. Interrelationships of wet, dry, and ash-free weights of macroinfauna in the Tvarminne area. Int. Rev. Gesamten Hydrobiol. 60:297-312.

Lewis, F.G. III, and A.W. Stoner. 1981. An examination of methods for sampling macrobenthos in seagrass meadows. Bull. Mar. Sci. 31:116-124.

Lie, U. 1968. A quantitative study of benthic infauna in Puget Sound, Washington, USA, in 1963-1964. Fisk Dir. Skr. Ser. HavUnders. 14:229-556.

Mills, E.L., K. Pittman, and B. Munroe. 1982. Effect of preservation on the weight of marine benthic invertebrates. Can. J. Fish. Aquat. Sci. 39:221-224.

Rees, H.L. 1984. A note on mesh selection and sampling efficiency in benthic studies. Mar. Pollut. Bull. 15:225-229.

Reish, D.J. 1959. A discussion of the importance of screen size in washing quantitative marine bottom samples. Ecology 40:307-309.

Schwinghamer, P. 1981. Characteristic size distributions of integral benthic communities. Can. J. Fish. Aquat. Sci. 38:125-1263.

Smith, R.I., and J.T. Carlton (eds). 1975. Light's manual: intertidal invertebrates of the central California coast. University of California Press, Berkeley, CA. 716 pp.

Striplin, P.L., and S.H. Maupin. 1982. Custom-designed sieving stations for small research vessels. Task report to the U.S. Environmental Protection Agency. Corvallis, OR.

Swartz, R.C. 1978. Techniques for sampling and analyzing the marine macrobenthos. EPA-600/3-78-030. U.S. Environmental Protection Agency, Corvallis, OR. 27 pp.

Wiederholm, T., and L. Eriksson. 1977. Effects of alcohol preservation on the weights of some benthic invertebrates. Zoon 5:29-31.