United States
Environmental Protection
Agency

Office of Research and
Development
Washington DC 20460

EPA/600/4-91/010
June 1991

EPA

Methods for the Determination of Metals in Environmental Samples

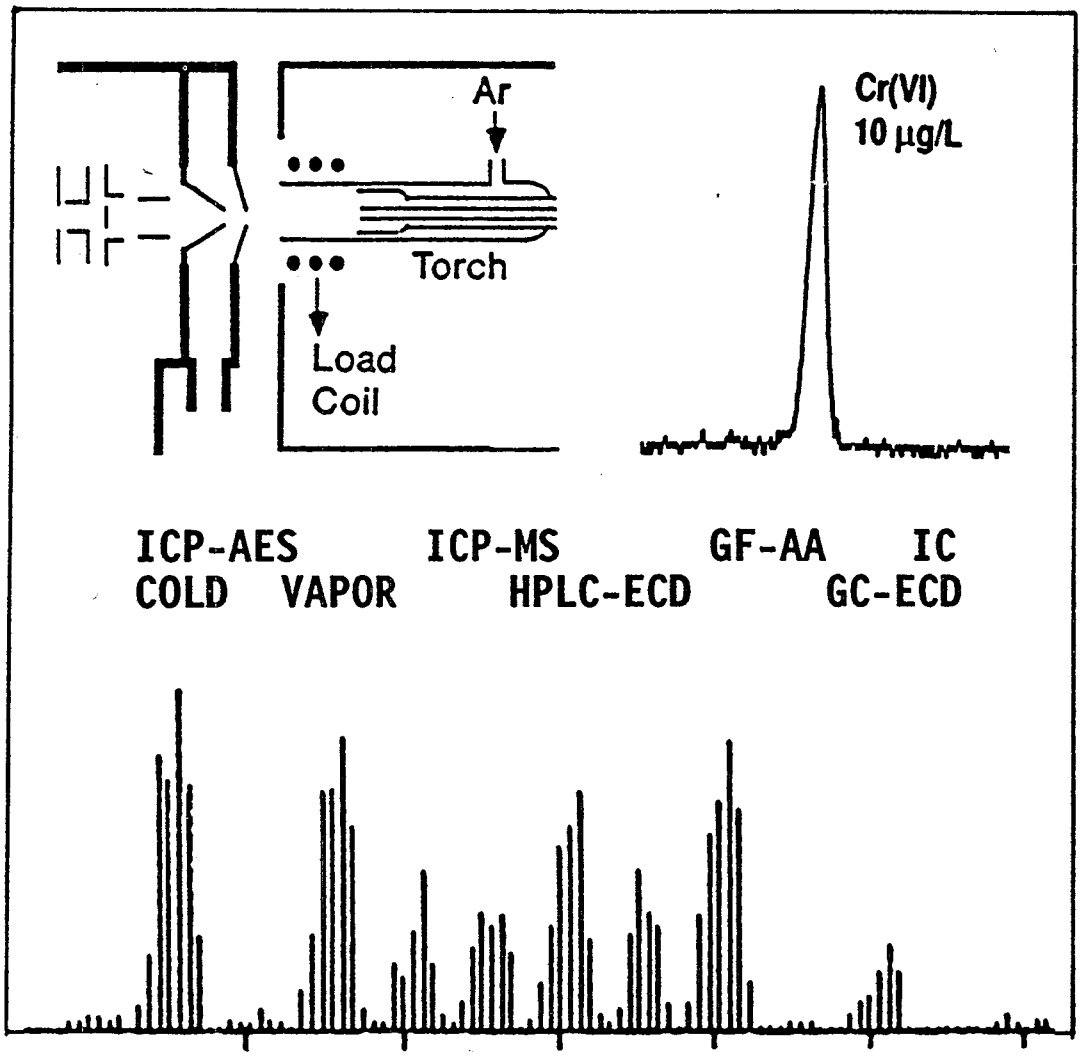

EPA-600/4-91-010
June 1991

METHODS FOR THE DETERMINATION OF METALS IN ENVIRONMENTAL SAMPLES

ENVIRONMENTAL MONITORING SYSTEMS LABORATORY
OFFICE OF RESEARCH AND DEVELOPMENT
U.S. ENVIRONMENTAL PROTECTION AGENCY
CINCINNATI, OHIO 45268

Printed on Recycled Paper

DISCLAIMER

This manual has been reviewed by the Environmental Monitoring Systems Laboratory - Cincinnati, U.S. Environmental Protection Agency, and approved for publication. Mention of trade names or commercial products does not constitute endorsement or recommendation for use.

FOREWORD

Environmental measurements are required to determine the quality of ambient waters and the character of waste effluents. The Environmental Monitoring Systems Laboratory - Cincinnati (EMSL-Cincinnati) conducts research to:

- Develop and evaluate analytical methods to identify and measure the concentration of chemical pollutants in drinking waters, surface waters, groundwaters, wastewaters, sediments, sludges, and solid wastes.

- Investigate methods for the identification and measurement of viruses, bacteria and other microbiological organisms in aqueous samples and to determine the responses of aquatic organisms to water quality.

- Develop and operate a quality assurance program to support the achievement of data quality objectives in measurements of pollutants in drinking water, surface water, groundwater, wastewater, sediment and solid waste.

This EMSL-Cincinnati publication, "Methods for the Determination of Metals in Environmental Samples" was prepared to gather together under a single cover a set of 13 laboratory analytical methods for metals in a variety of sample types. We are pleased to provide this manual and believe that it will be of considerable value to many public and private laboratories that wish to determine metals in environmental media for regulatory or other reasons.

Thomas A. Clark, Director
Environmental Monitoring Systems
Laboratory - Cincinnati

ABSTRACT

Thirteen analytical methods covering 35 analytes which may be present in a variety of environmental sample types are described in detail. Three of these methods are sample preparation procedures that require a separate determinate step found in other methods in this manual or elsewhere. These methods involve a wide range of analytical instrumentation including inductively coupled plasma (ICP)/atomic emission spectroscopy (AES), ICP/mass spectroscopy (MS), atomic absorption (AA) spectroscopy, ion chromatography (IC), and high performance liquid chromatography (HPLC). Application of these techniques to a diverse group of sample types is a somewhat unique feature of this manual. Sample types include waters ranging from drinking water to marine water as well as industrial and municipal wastewater, groundwater and landfill leachate. Also included are methods that will accommodate biological tissues, sediments, and soils.

TABLE OF CONTENTS

Method Number	Title	Revision	Date	Page
-	Disclaimer			ii
-	Foreword			iii
-	Abstract			iv
-	Analyte - Method Cross Reference			vii
-	Acknowledgement			ix
-	Introduction and General Comments			1
200.1	Determination of Acid Soluble Metals	2.0	4/91	3
200.2	Sample Preparation Procedure for Spectrochemical Determination of Total Recoverable Elements	2.3	4/91	13
200.3	Sample Preparation Procedure for Spectrochemical Determination of Total Recoverable Elements in Biological Tissues	1.0	4/91	23
200.7	Determination of Metals and Trace Elements in Water and Wastes by Inductively Coupled Plasma-Atomic Emission Spectrometry	3.3	4/91	31
200.8	Determination of Trace Elements in Water and Wastes by Inductively Coupled Plasma - Mass Spectrometry	4.4	4/91	83
200.9	Determination of Trace Elements by Stabilized Temperature Graphite Furnace Atomic Absorption Spectrometry	1.2	4/91	123
200.10	Determination of Trace Elements in Marine Waters by On-Line Chelation Preconcentration and Inductively Coupled Plasma - Mass Spectrometry	1.4	4/91	153
200.11	Determination of Metals in Fish Tissue by Inductively Coupled Plasma-Atomic Emission Spectrometry	2.1	4/91	177

218.6	Determination of Dissolved Hexavalent Chromium in Drinking Water, Groundwater, and Industrial Wastewater Effluents by Ion Chromatography	3.2	4/91	211
245.1	Determination of Mercury in Water by Cold Vapor Atomic Absorption Spectrometry	2.3	4/91	227
245.3	Determination of Inorganic Mercury (II) and Selected Organomercurials in Drinking and Ground Water by High Performance Liquid Chromatography (HPLC) with Electrochemical Detection (ECD)	1.1	4/91	241
245.5	Determination of Mercury in Sediment by Cold Vapor Atomic Absorption Spectrometry	2.3	4/91	267
245.6	Determination of Mercury in Tissues by Cold Vapor Atomic Absorption Spectrometry	2.3	4/91	281

ANALYTE - METHOD CROSS REFERENCE

ANALYTE	METHOD NUMBER												
	200.1	200.2	200.3	200.7	200.8	200.9	200.10	200.11	218.6	245.1	245.3	245.5	245.6
Aluminum		X	X	X	X	X		X					
Antimony		X	X	X	X	X		X					
Arsenic	X	X	X	X	X	X		X					
Barium		X	X	X	X								
Beryllium		X	X	X	X			X					
Boron				X									
Cadmium	X	X	X	X	X	X	X	X					
Calcium		X	X	X				X					
Chromium	X	X	X	X	X	X		X					
Chromium VI									X				
Cobalt		X	X	X	X		X						
Copper	X	X	X	X	X	X	X	X					
Iron		X	X	X		X		X					
Lead	X	X	X	X	X	X	X	X					
Lithium		X	X										
Magnesium		X	X	X				X					
Manganese		X	X	X	X	X							
Mercury, Total	X	X	X							X		X	X

ANALYTE - METHOD CROSS REFERENCE (CONT'D)

ANALYTE	METHOD NUMBER 200.1	200.2	200.3	200.7	200.8	200.9	200.10	200.11	218.6	245.1	245.3	245.5	245.6
Mercury, Organic											X		
Mercury II											X		
Molybdenum		X	X	X	X								
Nickel		X	X	X	X	X	X	X					
Phosphorus		X	X					X					
Potassium		X	X	X				X					
Selenium		X	X	X	X	X		X					
Silica		X	X	X									
Silver		X	X	X	X	X							
Sodium		X	X	X				X					
Strontium		X	X										
Thallium		X	X	X	X			X					
Thorium		X	X		X								
Tin		X	X			X							
Uranium		X	X		X		X						
Vanadium		X	X	X	X		X						
Zinc		X	X	X	X	X		X					

ACKNOWLEDGEMENT

This methods manual was prepared and assembled by the Inorganic Chemistry Branch of the Chemistry Research Division, Environmental Monitoring Systems Laboratory - Cincinnati. John Creed, Otis Evans, Larry Lobring, Theodore Martin and Billy Potter were major contributors to this effort. Special thanks and appreciation are due to Diane Schirmann, Patricia Hurr and Helen Brock for providing outstanding secretarial and word processing support and for format improvements in presentation of the manual. James O'Dell is also recognized for his contributions in both methods development and design of this manual's cover.

In addition, Elizabeth Arar and Stephen Long, Technology Applications, Inc., and William McDaniels, USEPA Region 4, are recognized for their significant contributions. Finally, all method authors and contributors wish to thank William Budde, Director of the Chemistry Research Division, and Thomas Clark, Director of the Environmental Monitoring Systems Laboratory - Cincinnati, for their cooperation and support during this project.

INTRODUCTION

An integral component of the role of the Environmental Protection Agency (EPA) in assessing and protecting the quality of the environment is the provision of means for monitoring environmental quality. In keeping with this role, EPA develops and disseminates analytical methods for measuring chemical and physical parameters affecting this most important resource, including contaminants which may have potential adverse effects upon the health of our environment. This manual provides 13 analytical methods for 35 analytes which may be present in a variety of environmental sample types. Three of the methods are sample preparation procedures that refer to instrumental techniques in other methods for multi-analyte or single-analyte quantitation. The remaining 11 analytical methods were written to stand-alone, that is, each method may be removed from the manual, photocopied, inserted into another binder, and used without loss of information. Revisions of these methods will be made available in a similar stand-alone format to facilitate the replacement of existing methods as new technical developments occur. This flexibility comes at the cost of some duplication of material, for example, the definitions of terms section of each method is nearly identical. The authors believe that the added bulk of the manual is a small price to pay for the format flexibility.

An important feature of the methods in this manual is the consistent use of terminology, and this feature is especially helpful in the quality control sections where standardized terminology is not yet available. The terms were carefully selected to be meaningful without extensive definition, and therefore should be easy to understand and use. The names of authors of the methods are provided to assist users in obtaining direct telephone support when required.

GENERAL COMMENTS

The methods in this manual are not intended to be specific for any single EPA regulation, compliance monitoring program, or specific study. In the past, manuals have been developed and published that respond to specific regulations, such as the Safe Drinking Water Act (SDWA) or to special studies such as the Environmental Monitoring and Assessment Program (EMAP) Near Coastal Demonstration Project. These methods are, however, available for incorporation into several regulatory programs due to their applicability to such diverse sample types. The ICP/AES, ICP/MS and AA methods have been or will be approved for use in the drinking water and the permit programs. The methods applicable for use in marine and estuary waters will be available for use in the Agency's National Estuary Program and subsequent EMAP studies that may involve the determination of toxic metals in the water column.

The quality assurance sections are uniform and contain minimum requirements for operating a reliable monitoring program: initial demonstration of performance, routine analyses of reagent blanks, analyses of fortified reagent blanks and fortified matrix samples, and analyses of quality control (QC) samples. Other QC practices are recommended and may be adopted to meet the particular needs of monitoring programs e.g., analyses of field reagent blanks, instrument control samples and performance evaluation samples.

METHOD 200.1

DETERMINATION OF ACID-SOLUBLE METALS

Theodore D. Martin and James W. O'Dell
Inorganic Chemistry Branch
Chemistry Research Division

and

Gerald D. McKee
Office of the Director

Revision 2.0
April 1991

ENVIRONMENTAL MONITORING SYSTEMS LABORATORY
OFFICE OF RESEARCH AND DEVELOPMENT
U.S. ENVIRONMENTAL PROTECTION AGENCY
CINCINNATI, OHIO 45268

METHOD 200.1

DETERMINATION OF ACID-SOLUBLE METALS

1. SCOPE AND APPLICATION

1.1 This method can be used to determine acid-soluble metals[1] in ambient waters and aqueous wastes. Results from this method may be used to calculate or estimate the potential impact on aquatic life and water quality. It is applicable to the analysis of arsenic (As), cadmium (Cd), chromium (Cr), copper (Cu), and lead (Pb).

1.2 This method provides instructions for sample handling, preservation, and preparation prior to analysis using spectrochemical methods given in this manual. Specific references are listed in Sect. 11.3 of this method.

1.3 This method is designed to be a supplement to approved EPA spectrophotometric and spectrochemical methods, however, it does not provide for oxidation state or organometallic speciation. For a summary and description of the analytical techniques employed, their estimated instrumental detection limits, definition of terms specific to each technique, types of interferences encountered, instrumental requirements, reagents and standards required for analysis, calibration, general instrumental operating procedures, instrumental quality control, data calculation and reporting, see appropriate parts of the methods referenced in Sect. 11.3 of this method.

2. SUMMARY OF METHOD

2.1 This method describes procedural instruction for treating an aqueous sample for determination of acid-soluble metals prior to either atomic absorption or atomic emission spectrochemical analysis. The aqueous sample is acidified to a pH of 1.75 ± 0.1 and held for a period of at least 16 h before being filtered through a 0.45-μm membrane filter and appropriately processed for analysis.

3. DEFINITIONS

3.1 Acid-Soluble Metal: That portion of the metal concentration that will pass through a 0.45-μm membrane filter after the solution to be filtered has been adjusted to within a pH 1.75 ± 0.1 and held for a period of 16 h.

4. INTERFERENCES

4.1 Contamination is of primary concern in determining acid-soluble metals. All sample containers, labware, filtering and sample processing apparatus should be washed as described in Sect. 8.1.

5. SAFETY

5.1 Ammonium hydroxide and nitric acid are moderately toxic and irritating to skin and mucus membranes. Use concentrated reagents in a hood and if eye or skin contact occurs, flush with large volumes of water. Always wear safety glasses or a shield for eye protection when working with these reagents.

6. APPARATUS

6.1 pH Meter-laboratory or field model: A wide variety of instruments are commercially available with various specifications and optional equipment. The instrument must be capable of measuring pH to 0.1 units and should be a meter equipped with a combination electrode.

6.2 Filter funnel and support: Only glass or plastic filtering apparatus should be used. The support should be capable of accepting both the prefilter and fine filter while maintaining a no-leak seal between the funnel and support. The Gelman model 4201 or equivalent is acceptable.

6.3 Suction flask, 500-mL capacity.

6.4 Membrane filter discs: Because the sample solution to be filtered will be of low pH (1.75 ± 0.1), the filter media may be either a polyvinyl chloride acrylic copolymer or mixed esters of cellulose material. The following 47-mm membrane filters or equivalent are acceptable.

6.4.1 Fine prefilter: DM-800, 0.8-μm (Gelman No.64502)

6.4.2 Fine filter: DM-450, 0.45-μm (Gelman No. 64515) or HAWP-047, 0.45 μm (Millipore No. HAWP 047 00)

6.5 Sample collection containers: Cubitainer, polyethylene, 1 quart (0.95L) capacity or equivalent.

6.6 Sample storage bottles: Wide-mouth high-density polyethylene with polypropylene screw cap closure, 500-mL capacity.

6.7 Glassware: Class A volumetric flasks and pipets of various volumes.

6.8 For the apparatus and equipment needed for the analytical technique employed, see the specific references.

7. REAGENTS AND STANDARDS

7.1 Deionized, distilled water: Prepare by passing distilled water through a mixed bed of cation and anion exchange resins. Use deionized, distilled water for the preparation of all reagents and as dilution or rinse water. The purity of this water must be equivalent to ASTM Type II reagent water of Specification D 1193[3].

7.2 Nitric acid, conc. (sp.gr. 1.41), ultra-high purity grade or equivalent. Redistilled acid is acceptable.

7.2.1 Nitric acid, (1+1): Add 500 mL conc. HNO_3 (Sect. 7.2) to 400 mL deionized, distilled water (Sect. 7.1) and dilute to 1 L.

7.3 Hydrochloric acid, conc. (sp. gr. 1.19).

7.3.1 Hydrochloric acid, (1+1): Add 500 mL conc. HCl (Sect. 7.3) to 400 mL deionized, distilled water (Sect. 7.1) and dilute to 1 L.

7.4 Ammonium Hydroxide, (1+9): Dilute 10 mL conc. ammonium hydroxide, NH_4OH (analytical reagent grade), to 100 mL with deionized, distilled water (Sect. 7.1).

7.5 Buffer solutions: Two buffer solutions are required, one in the range of pH 2 and the other at pH 7. These may be prepared or purchased as commercially available certified solutions. The use of purchased buffer solutions certified at a pH of 2 and 7 is recommended.

8. SAMPLE COLLECTION, PRESERVATION AND STORAGE

8.1 For the determination of acid-soluble metals, contamination and loss are of prime concern. Dust in the laboratory environment, impurities in reagents and improperly cleaned laboratory apparatus which the sample contacts are all potential sources of contamination. Sample containers can introduce either positive or negative errors in the measurement of metals by (a) contributing contaminants through leaching or surface desorption and/or (b) by depleting concentration through adsorption. Laboratory glassware, including the sample collection cubitainer and the polyethylene sample storage bottle, as well as the filtering apparatus should be thoroughly washed with detergent and tap water; thoroughly rinsed with (1+1) nitric acid, tap water, (1+1) hydrochloric acid, tap water and finally deionized distilled water in that order (See Notes 1 and 2).

NOTE 1: To remove difficult organic deposits from glassware, a commercial product, NOCHROMIX, available from Godax Laboratories, 480 Canal Street, New York, New York 10013 may be used. This product should not be used on plastic containers or filtering apparatus.

NOTE 2: If it can be documented through an active analytical quality control program using spiked samples, laboratory control standards and reagent blanks that certain steps in the cleaning procedure are not required, those steps may be eliminated from the procedure.

8.2 At the time of sample collection, the sample cubitainer is rinsed with the sample solution and the rinse portion discarded. The cubitainer is then filled with approximately 800 mL of sample, acidified with 2 mL of (1+1) nitric acid and mixed. For most ambient waters the acid addition will lower the pH to near 2, but not lower than 1.75. The cubitainer is sealed, placed in an ice chest at 4°C, and returned to the laboratory. Note the date and time of preservation on the sample tag.

8.3 The sample should not be held more than 3 days at 4°C from the day of collection before processing is started. The filtrate is estimated to be stable for 30 days.

9. CALIBRATION AND STANDARDIZATION

9.1 Calibration of pH meter - Because of the wide variety of pH meters and accessories, detailed operating procedures cannot be incorporated into this method. Each analyst must be acquainted with the operation of the system being used and familiar with all instrument functions. Special attention to care of the combination electrode is recommended. See Method 150.1 given in EPA 600/4-79-020, March 1983[2].

9.2 Each instrument/electrode system must be calibrated at a minimum of two points, one at or near pH 2, the other at pH 7. Calibrate according to manufacturer's instructions and measure the pH of each sample. Using deionized distilled water (Sect. 7.1), rinse the electrode system after each pH measurement.

10. QUALITY CONTROL

10.1 The following quality assurance procedures represent 5% of the analyzed sample load for 20 samples.

10.2 To measure recovery and cross contamination between samples that may occur, 300 mL of a laboratory control standard containing all six metals, each at a concentration above 10X its determined method detection limit (MDL), is transferred to a cleaned cubitainer, adjusted to a pH range of 1.75 ± 0.1 and allowed to stand for a minimum of 16 h. At a selected point midway through the group of samples to be analyzed, the control standard is filtered. The analyzed values should be within the warning limits of ±2 standard deviations of an established mean value as determined from seven prior replicate analyses. If an analyzed value was greater than ±3 standard deviations from the mean, the analysis was out of control.

10.3 To determine the MDL of each metal, prepare seven aliquots of the sample matrix of concern, spike the aliquots with each metal to a concentration of 3 to 5 times its estimated detection limit and follow the procedure - "Definition and Procedure for the Determination of the Method Detection Limit."[4]

11. PROCEDURE

11.1 SAMPLE pH ADJUSTMENT - For the determination of acid-soluble metals, the pH of the sample must be 1.75 ± 0.1. Upon receiving the sample in the laboratory, check the sample tag for proper preservation and to see that the holding time has not been exceeded. Allow the sample to come to room temperature, calibrate the pH meter and measure the pH of the sample in the cubitainer. Using deionized distilled water (Sect. 7.1), rinse the electrode system after each pH measurement. Do not wipe the electrode.

11.1.1 If the sample pH is between 1.65 and 1.85, mix the sample and allow to stand at room temperature for a minimum of 16 h for required dissolution. At the end of the extraction period, measure the pH again to verify that the proper pH was maintained, and if so, filter according to paragraph 11.2. If pH was not maintained, a new sample should be requested and more care and time taken in the initial pH adjustment.

11.1.2 If the sample pH is above 1.85, add (1+1) nitric acid in a dropwise manner, mix the sample in the cubitainer by inverting and shaking and redetermine the pH. Continue adding small increments of the (1+1) nitric acid and mix until the sample is within the desired pH range. If the pH should go below 1.65, add (1+9) ammonium hydroxide (Sect. 7.3) in a dropwise manner until the sample is within the pHrange of 1.65 to 1.85. Once the pH of the sample is properly adjusted and thoroughly mixed, set the sample aside for a minimum of 16 h for the required dissolution to occur. At the end of the extraction period, measure the pH again to verify the proper pH was maintained, and if so, filter according to paragraph 11.2. If pH was not maintained, a new sample should be requested and more care and time taken in the initial pH adjustment.

11.1.3 If upon receipt the sample has a pH below 1.65, the sample should be discarded and the collection of a new sample requested. The sample collection team should be informed of the reason why the previous sample was rejected.

11.2 SAMPLE FILTRATION - For determination of acid-soluble metals, the pH-adjusted sample is filtered through a 0.45-μm membrane filter. To prevent clogging of the filter, the sample is first passed through a fine prefilter.

11.2.1 Before filtering any sample make certain that the filtering apparatus (Sects. 6.2 and 6.3), polyethylene storage bottles (Sect. 6.7) and other necessary glassware have been cleaned by the procedure described in Sect. 8.1.

11.2.2 Insert the filter support of the filtering apparatus through the proper size rubber stopper and wrap the stopper with 1 in. PTFE laboratory tape to prevent contamination. Secure the flask in an upright position and place the support in the neck of the suction flask. Connect the suction flask to the vacuum line.

11.2.3 Place the membrane filters (Sect. 6.4) on the filter support in the following order: first the 0.45-μm fine filter and then the 0.8-μm prefilter. Assemble the filter funnel to the support as recommended by the manufacturer.

11.2.4 Do not mix the sample, but carefully decant approximately 50 mL of sample from the cubitainer into the filtering funnel and apply the vacuum. After filtration, break the vacuum, remove the filtering apparatus, rinse the suction flask with the filtrate and discard.

11.2.5 Reassemble the filtering apparatus and suction flask, reapply the vacuum and carefully decant approximately 250 mL of additional sample into the filtering apparatus.

11.2.6 When filtration is complete, break the vacuum, transfer the filtrate to a labeled, cleaned, polyethylene storage bottle (Sect. 6.7) and store until all analyses have been completed, not to exceed 30 days. The remaining unfiltered portion of the sample may be discarded.

11.2.7 Before filtering additional samples, discard the filters, rinse the suction flask and filtering apparatus with copious amounts of deionized distilled water (Sect. 7.1), discard the rinse water and drain away any excess water.

11.2.8 Repeat the above procedure until all samples and quality control aliquots have been filtered.

11.3 SAMPLE ANALYSES - The level of metal concentration will determine the analytical method selected to complete the analysis.

11.3.1 Inductively coupled plasma-atomic emission (ICP) spectrometric analyses - The acid-soluble metals As, Cd, Cr, Cu and Pb can be analyzed by direct aspiration ICP spectrometry using the procedure described in Method 200.7 of this manual. To prepare the sample for analyses, pipet 2 mL (1+1) hydrochloric acid into a 50-mL volumetric flask and dilute to the mark with sample filtrate. This dilution requires an appropriate factor be applied to the final calculations. In the absence of an established MDL (Sect. 10.2.1), the following estimated instrumental detection limit for each element should be considered the limit of analysis.

Element	Estimated Detection Limit mg/L
As	0.03
Cd	0.02
Cr	0.007
Cu	0.003
Pb	0.03

11.3.2 Direct aspiration flame atomic absorption (FLAA) analyses - The acid-soluble metals Cd, Cr, Cu and Pb can be analyzed by procedures given in approved FLAA methods without requiring additional processing of the filtrate before analysis. Listed below are the method numbers and estimated instrumental detection limits, which in the absence of an established MDL (Sect. 10.2.1), should be considered the FLAA limit of analysis for direct aspiration. In addition to the individual methods, for the proper analysis procedure, see parts 9.1 of Section 200.0: Atomic Absorption Methods given in EPA 600/4-79-020, March 1983[2] .

Element	Method Number	Estimated Detection Limit, mg/L
Cd	213.1	0.005
Cr	218.1	0.05
Cu	220.1	0.02
Pb	239.1	0.1

11.3.3 Stabilized Temperature Graphite Furnace Atomic Absorption (STGFAA) ANALYSES - For STGFAA analysis of the acid-soluble metals As, Cd, Cr, Cu and Pb, an aliquot of the filtrate must be treated with the appropriate matrix modifiers before analysis. For proper instrumental STGFAA calibration and suggested operating conditions see Method 200.9 of this manual. In the absence of an established MDL (Sect. 10.2.1), the following estimated STGFAA instrumental detection limit for each element should be considered the limit of anaysis.

Element	Estimated Detection Limit µg/L
As	0.9
Cd	0.05
Cr	0.2
Cu	1.0

12. CALCULATIONS

12.1 See the appropriate section of the recommended methods of analysis.

12.2 Final results of these calculations should be reported as mg/L acid-soluble metal.

13. PRECISION AND RECOVERY

13.1 Precision and recovery data for Cd, Cr, Cu, and Pb by this method using inductively coupled plasma-atomic emission spectrometric analyses are given in Table 1. The data are for three levels of concentration using varying amounts of the same sludge material spiked into river water. Seven replicate samples were prepared for each level of concentration. River water controls were subtracted from each level of spike. The percent recovery calculation is based on "total-recoverable" analysis of the same samples. Accuracy data on actual samples cannot be obtained.

13.2 Precision data on the determination of acid-soluble metals by this method using atomic absorption spectrophotometric analyses are estimated to be similar to the data in the methods referenced.

14. REFERENCES

1. Water Quality Criteria; Availability of Documents, Federal Register, Vol. 50, No. 145, July 29, 1985, pp. 30784-30796.

2. Chemical Analysis of Water and Wastes, EPA 600/4-79-020, (Revised, March 1983), U.S. Environmental Protection Agency, Office of Research and Development, Environmental Monitoring and Support Laboratory, Cincinnati, Ohio.

3. Annual Book of ASTM Standards, Part 31, American Society for Testing and Materials, 1916 Race St., Philadelphia, PA, 19103.

4. Code of Federal Regulations 40, Ch. 1, Pt. 136 Appendix B.

TABLE 1. PERCENT RECOVERY[1] OF ACID SOLUBLE METALS[2] FROM SLUDGE MATERIAL SPIKED IN RIVER WATER

	2.5 g Sludge/L				1.0 g Sludge/L				0.25 g Sludge/L			
		Acid Soluble				Acid Soluble				Acid Soluble		
Metal	Total Recoverable mg/L	Mean mg/L	Std. Dev.	Percent Recovery	Total Recoverable mg/L	Mean mg/L	Std. Dev.	Percent Recovery	Total Recoverable mg/L	Mean mg/L	Std. Dev.	Percent Recovery
Cd	0.085	0.074	±0.002	87%	0.036	0.030	±0.002	83%	0.010	0.009	±0.001	90%
Cr	7.48	3.18	±0.085	43%	3.28	1.21	±0.070	37%	0.669	0.326	±0.032	49%
Cu	1.17	1.11	±0.025	95%	0.502	0.442	±0.019	88%	0.130	0.115	±0.006	88%
Pb	0.601	0.311	±0.010	52%	0.268	0.137	±0.008	51%	0.067	0.042	±0.007	63%

1. Percent recovery is based on the "total recoverable" value.
2. All data obtained from ICP analyses.

METHOD 200.2

SAMPLE PREPARATION PROCEDURE FOR SPECTROCHEMICAL DETERMINATION OF TOTAL RECOVERABLE ELEMENTS

Theodore D. Martin, John T. Creed
Inorganic Chemistry Branch
Chemistry Research Division

and

Stephen E. Long
Technology Applications, Inc.

Revision 2.3
April 1991

ENVIRONMENTAL MONITORING SYSTEMS LABORATORY
OFFICE OF RESEARCH AND DEVELOPMENT
U. S. ENVIRONMENTAL PROTECTION AGENCY
CINCINNATI, OHIO 45268

METHOD 200.2

SAMPLE PREPARATION PROCEDURE FOR SPECTROCHEMICAL DETERMINATION OF TOTAL RECOVERABLE ELEMENTS

1. SCOPE AND APPLICATION

1.1 This method provides sample preparation procedures for the determination of total recoverable elements in groundwaters, surface waters, drinking waters, wastewaters, and, with the exception of silica, sediments, sludges and solid waste samples.[1]

1.2 This method is applicable to the following analytes:

Analyte		Chemical Abstract Services Registry Numbers (CASRN)
Aluminum	(Al)	7429-90-5
Antimony	(Sb)	7440-36-0
Arsenic	(As)	7440-38-2
Boron	(B)	7440-42-8
Barium	(Ba)	7440-39-3
Beryllium	(Be)	7440-41-7
Cadmium	(Cd)	7440-43-9
Calcium	(Ca)	7440-70-2
Chromium	(Cr)	7440-47-3
Cobalt	(Co)	7440-48-4
Copper	(Cu)	7440-50-8
Iron	(Fe)	7439-89-6
Lead	(Pb)	7439-92-1
Lithium	(Li)	7439-93-2
Magnesium	(Mg)	7439-95-4
Manganese	(Mn)	7439-96-5
Mercury	(Hg)	7439-97-6
Molybdenum	(Mo)	7439-98-7
Nickel	(Ni)	7440-02-0
Phosphorus	(P)	7723-14-0
Potassium	(K)	7440-09-7
Selenium	(Se)	7782-49-2
Silica	(SiO_2)	7631-86-9
Silver	(Ag)	7440-22-4
Sodium	(Na)	7440-23-5
Strontium	(Sr)	7440-24-6
Thallium	(Tl)	7440-28-0
Thorium	(Th)	7440-29-1
Tin	(Sn)	7440-31-5
Uranium	(U)	7440-61-1
Vanadium	(V)	7440-62-2
Zinc	(Zn)	7440-66-6

1.3 Samples prepared by this method can be analyzed by the following methods given in this manual: Method 200.7, Determination of Metals and Trace Elements by Inductively Coupled Plasma-Atomic Emission Spectrometry; Method 200.8, Determination of Trace Elements By Inductively Coupled Plasma-Mass Spectrometry; and Method 200.9, Determination of Trace Elements by Stabilized Temperature Graphite Furnace Atomic Absorption Spectrometry. Also, the direct aspiration flame atomic absorption methods given in "Methods for Chemical Analysis of Water and Wastes", EPA 600/4-79-020, March 1983 can be used for analysis. See the analytical methodology mentioned for selection of the appropriate method for the determination of a specific analyte.

1.4 This method is applicable to the preparation of drinking water samples for the determination of metal and metalloid contaminants. However, it can only be used prior to an approved analytical method for compliance monitoring when included in the approved method or when listed as a separately approved method in the Federal Register. It should be noted that some primary drinking water metal contaminants require that a 4X preconcentration be used prior to analysis instead of the 2X preconcentration described in this method.

1.5 This method is suitable for preparation of aqueous samples containing silver concentrations up to 0.1 mg/L. For the analysis of wastewater samples containing higher concentrations of silver, succeeding smaller volume, well mixed aliquots must be prepared until the analysis solution contains < 0.1 mg/L silver.

1.6 When using this method for determination of boron and silica in aqueous samples, only plastic or quartz labware should be used from the time of sample collection to the completion of the analysis. For accurate determinations of boron in solid sample extracts at concentrations below 100 mg/Kg, only quartz beakers should be used in the digestion with the immediate transfer of an extract aliquot to a plastic centrifuge tube following dilution of the digestate to volume. For these determinations, borosilicate glass must not be used in order to avoid sample contamination of these analytes from the glass.

1.7 This method will solubilize and hold in solution only minimal concentrations of barium, as barium sulfate. In addition, the stability of solubilized barium is greatly affected when free sulfate is available in solution. The concentration of barium that will remain in solution decreases as the free sulfate concentration increases. [For example, when a 100 mL aliquot of drinking water containing 60 mg/L sulfate was fortified with 5 mg of $BaSO_4$ salt (equivalent to 59 mg/L Ba in the 2X analysis solution) only 33 mg/L Ba was initially solubilized using the procedure given in Sect. 11.2. Upon standing one week, the barium concentration decreased to 12 mg/L. When 100 mL of deionized distilled water was fortified, the entire 5 mg of $BaSO_4$ was solubilized and remained in solution over

the same time period.] For more accurate determinations of barium in samples having varying and unknown concentrations of sulfate, samples should be analyzed as soon as possible after preparation is completed.

2. SUMMARY OF METHOD

2.1 Solid and aqueous samples are prepared in a similar manner for analysis. Metals and toxic elements are extracted from either solid samples or the solid phase portion of aqueous samples by refluxing the sample for 30 min in a mixture of nitric and hydrochloric acids. After extraction, the solubilized analytes are diluted to specified volumes with ASTM type I water. Diluted samples are to be analyzed by mass and/or atomic spectrometry methods as soon as possible after preparation.

3. DEFINITIONS

3.1 TOTAL RECOVERABLE - The concentration of analyte determined to be in either a solid sample or an unfiltered aqueous sample following treatment by refluxing with hot dilute mineral acid.

4. INTERFERENCES

4.1 In sample preparation, contamination is of prime concern. The work area, including bench top and fume hood, should be periodically cleaned in order to eliminate environmental contamination.

4.2 Chemical interferences are matrix dependent and cannot be documented previous to analysis.

4.3 Boron and silica from the glassware will grow into the sample solution during and following sample processing. For critical determinations of boron and silica, only quartz and/or plastic labware should be used. When quartz beakers are not available for digestion of solid samples, to reduce boron contamination, immediately transfer an aliquot of the diluted digestate to a plastic centrifuge tube for storage until time of analysis. A series of laboratory reagent blanks can be used to monitor and indicate the contamination effect.

5. SAFETY

5.1 All personnel handling environmental samples known to contain or to have been in contact with human waste should be immunized against known disease causative agents.

5.2 Material safety data sheets for all chemical reagents should be available to and understood by all personnel using this method. Specifically, concentrated hydrochloric acid and concentrated nitric acid are moderately toxic and extremely irritating to skin and mucus membranes. Use these reagents in a hood whenever possible and if

eye or skin contact occurs, flush with large volumes of water. Always wear safety glasses or a shield for eye protection when working with these reagents.[2,3,4]

6. APPARATUS AND EQUIPMENT

6.1 LABWARE - For determination of trace levels of elements, contamination and loss are of prime consideration. Potential contamination sources include improperly cleaned laboratory apparatus and general contamination within the laboratory environment from dust, etc. A clean laboratory work area designated for trace element sample handling must be used. Sample containers can introduce positive and negative errors in the determination of trace elements by (1) contributing contaminants through surface desorption or leaching, (2) depleting element concentrations through adsorption processes. All reusable labware (glass, quartz, polyethylene, Teflon, etc.), including the sample container, should be cleaned prior to use. Labware should be soaked overnight and thoroughly washed with laboratory-grade detergent and water, rinsed with water, and soaked for four hours in a mixture of dilute nitric and hydrochloric acid (1+2+9), followed by rinsing with water, ASTM type I water and oven drying.

NOTE: Chromic acid must not be used for cleaning glassware.

6.1.1 Labware - Volumetric flasks, graduated cylinders, funnels and centrifuge tubes (glass and/or metal free plastic).

6.1.2 Assorted calibrated pipettes.

6.1.3 Conical Phillips beakers, 250-mL with 50-mm watch glasses.
Griffin beakers, 250-mL with 75-mm watch glasses.
Teflon and/or quartz beakers, 250-mL with Teflon covers (optional).

6.1.4 Wash bottle - One piece stem, Teflon FEP bottle with Tefzel ETFE screw closure, 125-mL capacity.

6.2 SAMPLE PROCESSING EQUIPMENT

6.2.1 Hot plate: Ceramic top, graduated dial 90°C to 450°C (Corning PC100 or equivalent).

6.2.2 Single pan balance: Balance capable of weighing to the nearest 0.01 g.

6.2.3 Analytical balance: Balance capable of weighing to the nearest 0.0001 g.

6.2.4 Centrifuge: Steel cabinet with guard bowl, electric timer and brake. (International Centrifuge, Universal Model UV or equivalent.)

6.2.5 Drying oven: Gravity convection oven, with thermostatic control capable of maintaining 180°C ± 5°C.

7. REAGENTS AND CONSUMABLE MATERIALS

7.1 Reagents may contain elemental impurities which might affect analytical data. High-purity reagents should be used whenever possible. All acids used for this method must be of ultra high-purity grade.

7.1.1 Nitric acid, concentrated (sp.gr. 1.41).

7.1.2 Nitric acid (1+1) - Add 500 mL conc. nitric acid to 400 mL of ASTM type I water and dilute to 1 L.

7.1.3 Hydrochloric acid, concentrated (sp.gr. 1.19).

7.1.4 Hydrochloric acid (1+1) - Add 500 mL conc. hydrochloric acid to 400 mL of ASTM type I water and dilute to 1 L.

7.1.5 Hydrochloric acid (1+4) - Add 200 mL conc. hydrochloric acid to 400 mL of ASTM type I water and dilute to 1 L.

7.2 WATER - For all sample preparation and dilutions, ASTM type I water (ASTM D1193)[5] is required. Suitable water may be prepared by passing distilled water through a mixed bed of anion and cation exchange resins.

8. SAMPLE COLLECTION, PRESERVATION AND STORAGE

8.1 For determination of total recoverable elements in aqueous samples, acidify with (1+1) nitric acid at the time of collection to pH <2 normally, 3 mL of (1+1) nitric acid per liter of sample is sufficient for most ambient and drinking water samples). The sample should not be filtered prior to analysis.

NOTE: Samples that cannot be acid preserved at the time of collection because of sampling limitations or transport restrictions, should be acidified with nitric acid to a pH <2 upon receipt in the laboratory. Following acidification, the sample should be held for 16 h before withdrawing an aliquot for sample processing.

8.2 Solid samples usually require no preservation prior to analysis other than storage at 4°C.

9. CALIBRATION AND STANDARDIZATION

9.1 Not applicable. Follow instructions given in the analytical method selected.

10. QUALITY CONTROL

10.1 Each laboratory determining total recoverable elements is required to operate a formal quality control (QC) program. The minimum requirements of a QC program consist of an initial demonstration of laboratory capability, and the analysis of laboratory reagent blanks, fortified blanks and quality control samples as a continuing check on performance. The laboratory is required to maintain performance records that define the quality of data generated.

10.2 Specific instructions on accomplishing the described aspects of the QC program are discussed in the analytical methods (Sect. 1.3).

11. PROCEDURE

11.1 Sample Preparation - Aqueous Samples

For determination of total recoverable elements in water or wastewater, take a 100 mL (± 1 mL) aliquot from a well mixed, acid preserved sample containing not more than 0.25% (w/v) total solids and transfer to a 250-mL Griffin beaker. (If total solids are greater than 0.25% reduce the size of the aliquot by a proportionate amount.) Add 2 mL of (1+1) nitric acid and 1 mL of (1+1) hydrochloric acid. Heat on a hot plate at 85°C until the volume has been reduced to approximately 20 mL, ensuring that the sample does not boil. (A spare beaker containing approximately 20 mL of water can be used as a gauge).

> **NOTE:** For proper heating adjust the temperature control of the hot plate such that an uncovered beaker containing 50 mL of water located in the center of the hot plate can be maintained at a temperature no higher than 85°C. Evaporation time for 100 mL of sample at 85°C is approximately two hours with the rate of evaporation rapidly increasing as the sample volume approaches 20 mL.

Cover the beaker with a watch glass and reflux for 30 min. Slight boiling may occur but vigorous boiling should be avoided. Allow to cool and quantitatively transfer to either a 50-mL volumetric flask or a 50-mL class A stoppered graduated cylinder. Dilute to volume with ASTM type I water and mix. Centrifuge the sample or allow to stand overnight to separate insoluble material. The sample is now ready for analysis by either inductively coupled plasma-atomic emission spectrometry or direct aspiration flame and stabilized temperature graphite furnace atomic absorption spectroscopy (Sect. 1.3). For analyses by inductively coupled plasma-mass

spectrometry, pipette 20 mL of the prepared solution into a 50-mL volumetric flask, dilute to volume with ASTM type I water and mix. (Internal standards are added at the time of analysis.) Because the effects of various matrices on the stability of diluted samples cannot be characterized, all analyses should be performed as soon as possible after the completed preparation.

11.2 Sample Preparation - Solid Samples

For determination of total recoverable elements in solid samples (sludge, soils, and sediments), mix the sample thoroughly to achieve homogeneity and weigh accurately a 1.0 ± 0.01 g portion of the sample. Transfer to a 250-mL Phillips beaker. Add 4 mL (1+1) nitric acid and 10 mL (1+4) hydrochloric acid. Cover with a watch glass. Heat the sample on a hot plate and gently reflux for 30 min. Very slight boiling may occur, however vigorous boiling must be avoided to prevent the loss of $HCl-H_2O$ azeotrope.

> **NOTE:** For proper heating adjust the temperature control of the hot plate such than an uncovered Griffin beaker containing 50 mL of water located in the center of the hot plate can be maintained at a temperature approximately but no higher than 85°C.

Allow the sample to cool and quantitatively transfer to a 100-mL volumetric flask. Dilute to volume with ASTM type I water and mix. Centrifuge the sample or allow to stand overnight to separate insoluble material. The sample is now ready for analysis by either inductively coupled plasma-atomic emission spectrometry or direct aspiration flame and stabilized temperature graphite furnace atomic absorption spectroscopy (Sect. 1.3). For analysis by inductively coupled plasma-mass spectrometry, pipette 10 mL into a 50-mL volumetric flask, dilute to volume with ASTM type I water and mix. (Internal standards are added at the time of analysis.) Because the effects of various matrices on the stability of diluted samples cannot be characterized, all analyses should be performed as soon as possible after the completed preparation.

> **NOTE:** Determine the percent solids in the sample for use in calculations and for reporting data on a dry weight basis. To determine the dry weight transfer a separate, uniform 1 gram aliquot to an evaporating dish and dry to a constant weight at 103°-105°C.

11.3 Sample Analysis - Use an analytical method listed in Sect. 1.3.

12. CALCULATIONS

12.1 Not applicable. Discussed in analytical methods listed in Sect. 1.3.

13. PRECISION AND ACCURACY

13.1 Not applicable. Available data included in analytical methods listed in Sect. 1.3.

14. REFERENCES

1. Martin, T.D. and E.R. Martin, "Evaluation of Method 200.2 Sample Preparation Procedure for Spectrochemical Analyses of Total Recoverable Elements", December 1989, U.S. Environmental Protection Agency, Office of Research and Development, Environmental Monitoring Systems Laboratory, Cincinnati, Ohio 45268.

2. "OSHA Safety and Health Standards, General Industry", (29 CFR 1910), Occupational Safety and Health Administration, OSHA 2206, revised January 1976.

3. "Safety in Academic Chemistry Laboratories", American Chemical Society Publication, Committee on Chemical Safety, 3rd Edition, 1979.

4. "Proposed OSHA Safety and Health Standards, Laboratories", Occupational Safety and Health Administration, Federal Register, July 24, 1986.

5. Annual Book of ASTM Standards, Volume 11.01.

METHOD 200.3

SAMPLE PREPARATION PROCEDURE FOR SPECTROCHEMICAL DETERMINATION OF TOTAL RECOVERABLE ELEMENTS IN BIOLOGICAL TISSUES

William McDaniel

Environmental Services Division
Region IV
U. S. Environmental Protection Agency

Revision 1.0
April 1991

Adapted by:

ENVIRONMENTAL MONITORING SYSTEMS LABORATORY
OFFICE OF RESEARCH AND DEVELOPMENT
U. S. ENVIRONMENTAL PROTECTION AGENCY
CINCINNATI, OHIO 45268

METHOD 200.3

SAMPLE PREPARATION PROCEDURE FOR SPECTROCHEMICAL DETERMINATION OF TOTAL RECOVERABLE ELEMENTS IN BIOLOGICAL TISSUES

1. SCOPE AND APPLICATION

1.1 This method provides sample preparation procedures for the determination of total recoverable elements in biological tissue samples.

1.2 This method is applicable to the following elements:

Analyte		Chemical Abstract Services Registry Numbers (CASRN)
Aluminum	(Al)	7429-90-5
Antimony	(Sb)	7440-36-0
Arsenic	(As)	7440-38-2
Barium	(Ba)	7440-39-3
Beryllium	(Be)	7440-41-7
Cadmium	(Cd)	7440-43-9
Calcium	(Ca)	7440-70-2
Chromium	(Cr)	7440-47-3
Cobalt	(Co)	7440-48-4
Copper	(Cu)	7440-50-8
Iron	(Fe)	7439-89-6
Lead	(Pb)	7439-92-1
Lithium	(Li)	7439-93-2
Magnesium	(Mg)	7439-95-4
Manganese	(Mn)	7439-96-5
Mercury	(HG)	7439-97-6
Molybdenum	(Mo)	7439-98-7
Nickel	(Ni)	7440-02-0
Phosphorus	(P)	7723-14-0
Potassium	(K)	7440-09-7
Selenium	(Se)	7782-49-2
Silver	(Ag)	7440-22-4
Sodium	(Na)	7440-23-5
Strontium	(Sr)	7440-24-6
Thallium	(Tl)	7440-28-0
Thorium	(Th)	7440-29-1
Uranium	(U)	7440-61-1
Vanadium	(V)	7440-62-2
Zinc	(Zn)	7440-66-6

1.3 Samples prepared by this method can be analyzed by inductively coupled plasma-atomic emission spectrometry (ICP-AES) Method 200.7, "Determination of Metals and Trace Elements by Inductively Coupled Plasma-Atomic Emission Spectrometry," inductively coupled plasma-mass spectrometry (ICP-MS) Method 200.8, "Determination of Metals

and Trace Elements by Inductively Coupled Plasma-Mass Spectrometry," and stabilized temperature platform graphite furnace atomic absorption (STGFAA), Method 200.9, "Determination of Trace Elements by Stabilized Temperature Graphite Furnace Atomic Absorption Spectrometry". See analytical methods mentioned for selection of the appropriate method for determination of a specific analyte.

2. SUMMARY OF METHOD

2.1 Up to 5 g of a frozen tissue sample is transferred to a 125 mL flask. The tissue is digested with nitric acid, hydrogen peroxide and heat. This digestion results in a clear solution that is then analyzed by mass or atomic spectrometry methods. The determined metal concentration is reported in microgram/gram (µg/g) wet tissue weight.

3. DEFINITIONS

3.1 TOTAL RECOVERABLE - The concentration of analyte determined to be in either a solid sample or an unfiltered aqueous sample following treatment by refluxing with hot dilute mineral acid.

3.2 LABORATORY REAGENT BLANK (LRB) - A solution of reagents that is treated exactly as a sample including exposure to all glassware and equipment that are used with other samples. The LRB is used to determine if method analytes or other interferences are present in the laboratory environment, reagents, or apparatus.

4. INTERFERENCES

4.1 Chromium contamination of biological samples from the use of stainless steel has been reported.[4] Use of special cutting implements and dissecting board made from materials that are not of interest is recommended. Knife blades made of titanium with Teflon handles have been successfully used.

4.2 In sample preparation, contamination is of prime concern. The work area, including bench top and fume hood, should be periodically cleaned in order to eliminate environmental contamination.

4.3 Chemical interferences are matrix dependent and cannot be predicted.

5. SAFETY

5.1 All personnel handling environmental samples known to contain or to have been in contact with human waste should be immunized against known disease causative agents.

5.2 Material safety data sheets for all chemical reagents should be available to and understood by all personnel using this method. Concentrated nitric and hydrochloric acids are moderately toxic and extremely irritating to skin and mucus membranes. Hydrogen peroxide

is a strong oxidizing reagent. Use these reagents in a hood whenever possible and if eye or skin contact occurs, flush with large volumes of water. Always wear safety glasses or a shield for eye protection when working with these reagents.

6. APPARATUS AND EQUIPMENT

6.1 LABWARE - For determination of trace levels of elements, contamination and loss are of prime consideration. Potential contamination sources include improperly cleaned laboratory apparatus and general contamination within the laboratory environment from dust, etc. A clean laboratory work area designated for trace element sample handling must be used. Sample containers can introduce positive and negative errors in the determination of trace elements by contributing contaminants through surface desorption/leaching, or depleting element concentrations through adsorption processes. All reusable labware (glass, quartz, polyethylene, Teflon, etc.), including the sample container, should be cleaned prior to use or shown to be contaminant free. Labware should be soaked overnight and thoroughly washed with laboratory-grade detergent and water, rinsed with water, and soaked for four hours in a mixture of dilute nitric and hydrochloric acid (1+2+9), followed by rinsing with water, ASTM type I water and oven drying.

NOTE: Chromic acid must not be used for cleaning glassware.

6.1.1 Glassware - Volumetric flasks, graduated cylinders and 125-mL Erlenmeyer flasks.

6.1.2 Assorted calibrated pipettes.

6.1.3 Wash bottle - One piece stem, Teflon FEP bottle with Tefzel ETFE screw closure, 125-mL capacity.

6.2 SAMPLE PROCESSING EQUIPMENT

6.2.1 Balance - Analytical, capable of accurately weighing to 0.1 mg.

6.2.2 Hot Plate - (Corning PC100 or equivalent). An oscillating hot plate will aid in sample digestion.

6.3 TISSUE DISSECTING EQUIPMENT

6.3.1. Dissecting Board: Polyethylene or other inert, nonmetallic material, any non-wetting, easy-to-clean or disposable surface is suitable. Adhesive backed Teflon or plastic film may be convenient to use.

6.3.2 Forceps: Plastic, Teflon or Teflon coated.

6.3.3 Surgical Blades: Disposable stainless steel with stainless steel or plastic handle (Sect. 4.1).

6.3.4 Scissors: Stainless steel.

6.3.5 Plastic bags with watertight seal, metal free.

6.3.6 Label tape: Self-adhesive, vinyl coated marking tape, solvent resistant, usable for temperatures from +121°C to -23°C.

6.3.7 Polyvinyl chloride or rubber gloves, talc-free.

7. REAGENTS AND CONSUMABLE MATERIALS

7.1 Reagents may contain elemental impurities which might affect analytical data. High-purity reagents should be used whenever possible. All acids used for this method must be of ultra high-purity grade.

7.1.1 Nitric acid, concentrated (sp.gr. 1.41).

7.1.2 Hydrochloric acid, concentrated (sp.gr. 1.19).

7.1.3 Hydrogen peroxide (30%)

7.2 WATER - For all sample preparation and dilutions, ASTM type I water (ASTM D1193) is required. Suitable water may be prepared by passing distilled water through a mixed bed of anion and cation exchange resins.

8. SAMPLE COLLECTION, PRESERVATION AND STORAGE

8.1 Appropriate individual tissue samples should be taken soon after collection and must be taken prior to freezing[2]. If dissection of the tissue cannot be performed immediately after collection, it should be placed in a plastic bag (Sect. 6.3.5), sealed and placed on ice or refrigerated at approximately 4°C.

8.2 Prior to dissection, the tissue should be rinsed with metal-free water and blotted dry. Dissection should be performed within 24 hours of collection. Each individual tissue sample should also be rinsed with metal-free water, blotted dry, and frozen at $\leq$-20°C (dry ice).

8.3 Tissue samples of up to 5 g should be taken using a special implement (Sect. 4.1) and handled with plastic forceps (Sect. 6.3.2)[3,4].

8.4 A maximum holding time for frozen samples has not been determined.

9. CALIBRATION AND STANDARDIZATION

9.1 Not applicable. Follow instructions given in the analytical method selected.

10. QUALITY CONTROL

10.1 Each laboratory determining total recoverable elements is required to operate a formal quality control (QC) program. The minimum requirements of a QC program consist of an initial demonstration of laboratory capability and analysis of laboratory reagent blanks and fortified blanks and samples as a continuing check on performance. The laboratory is required to maintain performance records that define the quality of data generated.

10.2 Specific instructions on accomplishing the described aspects of the QC program are discussed in the analytical methods.

11. PROCEDURE

11.1 Sample Preparation - Place up to a 5 g subsample of frozen tissue into a 125-mL erlenmeyer flask. Any sample spiking solutions should be added at this time and allowed to be in contact with the sample prior to addition of acid.

11.2 Add 10 mL of concentrated nitric acid and warm on a hot plate until the tissue is solubilized. Gentle swirling the samples or use of an oscillating hot plate will aid in this process.

11.3 Increase temperature to near boiling until the solution begins to turn brown. Cool sample, add an additional 5 mL of concentrated nitric acid and return to the hot plate until the solution once again begins to turn brown.

11.4 Cool sample, add an additional 2 mL of concentrated nitric acid, return to the hot plate and reduce the volume to 5-10 mL. Cool sample, add 2 mL of 30% hydrogen peroxide, return sample to the hot plate and reduce the volume to 5-10 mL.

11.5 Repeat Sect. 11.4 until the solution is clear or until a total of 10 mL of peroxide has been added. **NOTE:** A laboratory reagent blank is especially critical in this procedure because the procedure concentrates any reagent contaminants.

11.6 Cool the sample, add 2 mL of concentrated hydrochloric acid, return to the hot plate and reduce the volume to 5 mL.

11.7 Allow the sample to cool and quantitatively transfer to a 100-mL volumetric flask. Dilute to volume with ASTM type I water, mix, and allow any insoluble material to separate. The sample is now ready for analysis by either ICP-AES or STGFAA. For analysis by ICP-MS an additional dilution (1+4) is required.

11.8 Sample Analysis - Use one of the analytical methods listed in Sect. 1.3.

12. CALCULATIONS

12.1 Not applicable. Discussed in analytical methods listed in Sect. 1.3.

13. PRECISION AND ACCURACY

13.1 Not applicable. Available data included in analytical methods listed in Sect. 1.3.

14. REFERENCES

1. Versieck, J., and F. Barbier, "Sample Contamination as A Source of Error in Trace-Element Analysis of Biological Samples," Talanta, Vol. 29, pp. 973-984, 1982.

2. Ney, J. J., and M. G. Martin, "Influences of Prefreezing on Heavy Metal Concentrations in Bluegill Sunfish," Water Res., Vol. 19, No. 7, pp. 905-907, 1985.

3. "The Pilot National Environmental Specimen Bank," NBS Special Publication 656, U. S. Department of Commerce, August, 1983.

4. Koirtyohann, S. R., and H. C. Hopps, "Sample Selection, Collection, Preservation and Storage for Data Bank on Trace Elements in Human Tissue," Federation Proceedings, Vol. 40, No. 8, June, 1981.

METHOD 200.7

DETERMINATION OF METALS AND TRACE ELEMENTS IN WATER AND WASTES BY INDUCTIVELY COUPLED PLASMA-ATOMIC EMISSION SPECTROMETRY

Theodore D. Martin, Carol A. Brockhoff and John T. Creed
Inorganic Chemistry Branch
Chemistry Research Division

and

Stephen E. Long
Technology Applications, Inc.

Revision 3.3
April 1991

ENVIRONMENTAL MONITORING SYSTEMS LABORATORY
OFFICE OF RESEARCH AND DEVELOPMENT
U. S. ENVIRONMENTAL PROTECTION AGENCY
CINCINNATI, OHIO 45268

METHOD 200.7

DETERMINATION OF METALS AND TRACE ELEMENTS BY INDUCTIVELY COUPLED PLASMA-ATOMIC EMISSION SPECTROMETRY

1. SCOPE AND APPLICATION

1.1 This method provides procedures for determination of dissolved elements in ground waters, surface waters, and drinking water supplies. It may also be used for determination of total recoverable element concentrations in these waters and wastewaters and, with the exception of silica, in sediments, sludges and solid waste samples.

1.2 Dissolved elements are determined after suitable filtration and acid preservation. Acid digestion procedures are required prior to the determination of total recoverable elements. To reduce potential interferences, dissolved solids should be < 0.2% (w/v), (Sect. 4.1.2).

1.3 Estuarine water may be analyzed by this method, however, matrix matched standards or the method of standard addition (Sect. 9.8) must be used following sample preparation (Sect. 11.2.2). Prepared samples may require dilution prior to analysis to avoid physical interferences (Sect. 4.1.2) and problematic operation of the sample introduction system.

1.4 This method is applicable to the following analytes:

Analyte		Chemical Abstract Services Registry Numbers (CASRN)
Aluminum	(Al)	7429-90-5
Antimony	(Sb)	7440-36-0
Arsenic	(As)	7440-38-2
Barium	(Ba)	7440-39-3
Beryllium	(Be)	7440-41-7
Boron	(B)	7440-42-8
Cadmium	(Cd)	7440-43-9
Calcium	(Ca)	7440-70-2
Chromium	(Cr)	7440-47-3
Cobalt	(Co)	7440-48-4
Copper	(Cu)	7440-50-8
Iron	(Fe)	7439-89-6
Lead	(Pb)	7439-92-1
Lithium	(Li)	7439-93-1
Magnesium	(Mg)	7439-95-4
Manganese	(Mn)	7439-96-5
Mercury	(Hg)	7439-97-6
Molybdenum	(Mo)	7439-98-7
Nickel	(Ni)	7440-02-0

Phosphorus	(P)	7723-14-0
Potassium	(K)	7440-09-7
Selenium	(Se)	7782-49-2
Silica	(SiO_2)	7631-86-9
Silver	(Ag)	7440-22-4
Sodium	(Na)	7440-23-5
Strontium	(Sr)	7440-24-6
Thallium	(Tl)	7440-28-0
Tin	(Sn)	7440-31-5
Vanadium	(V)	7440-62-2
Zinc	(Zn)	7440-66-6

Listed in Table 1 are the recommended wavelengths for these analytes along with adjacent locations for background correction. Also listed in Table 1 are typical instrument detection limits (IDLs Sect. 3.3) determined using reagent acid ASTM type I water and conventional pneumatic nebulization sample introduction into the plasma. These IDLs are intended as a guide and may vary for each laboratory depending on instrumentation and selected operating conditions. Wavelengths and background correction locations other than those recommended may be substituted if they provide the needed sensitivity and are properly corrected for interelement spectral interferences.

1.5 Specific instrumental operating conditions are given in Table 4. However, because of the differences between various makes and models of spectrometers, the analyst should follow the instrument manufacturer's instructions and if possible, approximate the recommended conditions given (Table 4).

1.6 When using this method for determination of boron and silica in aqueous samples, only plastic, Teflon or quartz labware should be used from time of sample collection to completion of analysis. For accurate determinations of boron in solid sample extracts at concentrations below 100 mg/kg, only quartz beakers should be used in the digestion with immediate transfer of an extract aliquot to a plastic centrifuge tube following dilution of the digestate to volume. For these determinations, borosilicate glass must not be used in order to avoid sample contamination of these analytes from the glass.

1.7 This method is applicable to analysis of drinking water for the determination of primary and secondary contaminant metals. However, it can only be used for compliance monitoring of a drinking water contaminant when listed in the Federal Register as an approved method and laboratory performance data meet the required method detection limit (MDL) or practical quantification limit (PQL) established by the Office of Ground Water and Drinking Water. All drinking water samples must be pretreated with acid prior to analysis. When pneumatic nebulization is used for these determinations, certain analytes require 4X preconcentration prior to analysis instead of the 2X preconcentration procedure given in

Sect. 11.2.1 of this method. Analytes requiring 4X preconcentration are noted in the Federal Register at the time the method is promulgated.

1.8 This method is suitable for determination of silver in aqueous samples containing concentrations up to 0.1 mg/L. For the analysis of wastewater samples containing higher concentrations of silver, succeeding smaller volume, well mixed aliquots should be prepared until the analysis solution contains < 0.1 mg/L silver.

1.9 The sample preparation procedures given in Sects. 11.2 and 11.3 will solubilize and hold in solution only minimal concentrations of barium, as barium sulfate. In addition, the stability of solubilized barium is greatly affected when free sulfate is available in solution. The concentration of barium that will remain in solution decreases as the free sulfate concentration increases. [For example, when a 100 mL aliquot of drinking water containing 60 mg/L sulfate was fortified with 5 mg of $BaSO_4$ salt (equivalent to 59 mg/L Ba in the 2X analysis solution) only 33 mg/L Ba was initially solubilized using the procedure given Sect. 11.2.1. Upon standing one week, the barium concentration decreased to 12 mg/L. When 100 mL of deionized distilled water was fortified, the entire 5 mg of $BaSO_4$ was solubilized and remained in solution over the same time period.] For more accurate determinations of barium in samples having varying and unknown concentrations of sulfate, samples should be analyzed as soon as possible after sample preparation is completed.

1.10 With the exception of estuarine waters, once the samples have been collected, approximately 20 samples including the mandatory quality control samples can be analyzed using this method during a 1.5 work day period.

2. SUMMARY OF METHOD

2.1 This method describes a technique for simultaneous or sequential multielement determination of metals and trace elements in solution. The basis of the method is the measurement of atomic emission by an optical spectrometric technique. Samples are nebulized and the aerosol that is produced is transported to the plasma torch where desolvation and excitation occur. Characteristic atomic-line emission spectra are produced by a radio-frequency inductively coupled plasma (ICP). The spectra are dispersed by a grating spectrometer, and line intensities are monitored by a photosensitive device (e.g. photomultiplier tube or diode array). Photocurrents from the photosensitive device are processed and controlled by a computer system. A background correction technique is required to compensate for variable background contribution to the determination of the analytes. Background must be measured adjacent to analyte lines on samples during analysis. The position selected for the background intensity measurement, on either or both sides of the analytical line, will be determined by the complexity of the

spectrum adjacent to the analyte line. The position used must either be free of spectral interference or adequately corrected to reflect the same change in background intensity as occurs at the analyte wavelength measured. Background correction is not required in cases of line broadening where a background correction measurement would actually degrade the analytical result. The possibility of additional interferences named in Sect. 4.1 (and tests for their presence as described in Sect. 4.2) should also be recognized and appropriate corrections made.

3. DEFINITIONS

3.1 DISSOLVED - The concentration of analyte that will pass through a 0.45-μm membrane filter assembly, prior to sample acidification.

3.2 TOTAL RECOVERABLE - The concentration of an analyte determined in an unfiltered sample following treatment by refluxing with hot, dilute mineral acid.

3.3 INSTRUMENTAL DETECTION LIMIT (IDL) - The concentration equivalent to the analyte signal which is equal to three times the standard deviation of a series of ten replicate measurements of a reagent blank signal at the same wavelength.

3.4 METHOD DETECTION LIMIT (MDL) - The minimum concentration of an analyte that can be identified, measured and reported with 99% confidence that the analyte concentration is greater than zero (Sect. 10.2.2).

3.5 LINEAR DYNAMIC RANGE (LDR) - The concentration range over which the analytical curve remains linear (Sect. 10.2.3).

3.6 METHOD OF STANDARD ADDITION - The standard addition technique involves the use of the unknown and the unknown plus a known amount of standard (Sect. 9.8.1).

3.7 LABORATORY REAGENT BLANK (LRB) (preparation blank) - An aliquot of reagent water that is treated exactly as a sample including exposure to all glassware, equipment, reagents, and acids that are used with other samples. The LRB is used to determine if method analytes or other interferences are present in the laboratory environment, the reagents or apparatus (Sects. 7.5.2 and 10.3.1).

3.8 CALIBRATION BLANK - A volume of ASTM type I water acidified with the same acid matrix as in the calibration standards. The calibration blank is a zero standard and is used to calibrate the ICP instrument (Sect. 7.5.1).

3.9 STOCK STANDARD SOLUTION - A concentrated solution containing one analyte prepared in the laboratory using assayed reference materials or purchased from a reputable commercial source (Sect. 7.3). Stock

standard solutions are used to prepare calibration solutions and other needed analyte solutions.

3.10 CALIBRATION STANDARD (CAL) - A solution prepared from the dilution of stock standard solutions. The CAL solutions are used to calibrate the instrument response with respect to analyte concentration (Sect. 7.4).

3.11 LABORATORY PERFORMANCE CHECK SOLUTION (LPC) - A solution of method analytes, used to evaluate the performance of the instrument system with respect to a defined set of method criteria (Sects. 7.8 and 9.6).

3.12 PLASMA SOLUTION - A solution that is used to determine the optimum height above the work coil for viewing the plasma (Sects. 7.6 and 9.3.3).

3.13 TUNING SOLUTION - A solution which is used to determine acceptable instrument performance prior to calibration and sample analyses (Sects. 7.7 and 9.4).

3.14 SPECTRAL INTERFERENCE CHECK SOLUTION (SIC) - A solution of selected method analytes of higher level concentrations which is used to evaluate the procedural routine for correcting known interelement spectral interferences with respect to a defined set of method criteria (Sects. 7.9 and 9.7).

3.15 LABORATORY FORTIFIED BLANK (LFB) - An aliquot of reagent water to which known quantities of the method analytes are added in the laboratory. The LFB is analyzed exactly like a sample, and its purpose is to determine whether method performance is within acceptable control limits (Sects. 7.11 and 10.3.2).

3.16 LABORATORY FORTIFIED SAMPLE MATRIX (LFM) - An aliquot of an environmental sample to which known quantities of the method analytes are added in the laboratory. The LFM is analyzed exactly like a sample, and its purpose is to determine whether the sample matrix contributes bias to the analytical results. The background concentrations of the analytes in the sample matrix must be determined in a separate aliquot and the measured values in the LFM corrected for the concentrations found (Sect. 10.4).

3.17 FIELD DUPLICATES (FD1 AND FD2) - Two separate samples collected at the same time and place under identical circumstances and treated exactly the same throughout field and laboratory procedures. Analyses of FD1 and FD2 give a measure of the precision associated with sample collection, preservation, and storage, as well as with laboratory procedure.

3.18 QUALITY CONTROL SAMPLE (QCS) - A solution of method analytes of known concentrations which is used to fortify an aliquot of LRB matrix. The QCS is obtained from a source external to the

laboratory, and is used to check laboratory performance (Sects. 7.12 and 10.2.4).

4. INTERFERENCES

4.1 Several types of interference effects may contribute to inaccuracies in the determination of an analyte by ICP-AES. They can be summarized as follows:

4.1.1 Spectral interferences - Can be categorized as (1) overlap of a spectral line from another element; (2) unresolved overlap of molecular band spectra; (3) background contribution from continuous or recombination phenomena; and (4) background contribution from stray light from the line emission of high concentration elements.[1] The first of these effects can be compensated by utilizing a computer correction of raw data, requiring monitoring and measurement of the interfering element.[2,3] The second effect may require selection of an alternative wavelength. The third and fourth effects can usually be compensated by a background correction adjacent to the analyte line.

Given in Table 3 is a listing of the interelement spectral interferences that can occur between method analytes when using the recommended wavelengths and locations for background corrections listed in Table 1. Table 3 is not a complete listing of all possible interelement interferences; however, those not included are interferences from elements either not readily solubilized by the sample preparation procedures described in this method or from elements rare in nature. The correction factors listed in Table 3 indicate the magnitude of the interference. The factors were experimentally determined at EMSL-Cincinnati using an instrument with a specified wavelength dispersion of 0.53 nm/mm and a spectral bandpass resolution of 0.036 nm in the first order. The factors have been rounded to the tenth-thousand place or reported to one significant number. The listing is presented as a guide for users of this method for determining interelement interference effects. The reader is cautioned that other analytical systems may exhibit somewhat different levels of interference than those shown in Table 3 and that the interference effects must be evaluated for each individual instrumental system.

The correction factors given in Table 3 were determined by analyzing single element solutions of each interfering element. The concentration of each single element solution was within the LDR of that element. For most elements a 100 mg/L solution was used with the numerical value of most correction factors being confirmed by analyzing lesser dilutions of the single element solution. Because Ca, Fe, Mg and Na can normally be present at concentrations in excess of

100 mg/L, the interferences attributed to these elements were determined at concentrations near their linear limits. The criteria for listing a spectral interference was an apparent analyte concentration from the interfering single element solution that was outside the 95% confidence interval estimates for the determined MDL limits[4] of the analyte using the 2x preconcentration procedure described in Sect. 11.2.1 (See Table 2). The correction factor was calculated by dividing the blank subtracted apparent analyte concentration by the determined concentration of the interfering element.

Positive values in Table 3 are interferences that occur on the wavelength peaks, while negative values indicate an interference at the location used for background correction. In practice, during analysis, the correction factor is used to calculate the apparent concentration from interfering element and is then subtracted from the instrumental analyte concentration to determine the net, or sample analyte concentration (while positive values are subtracted, negative values are actually added). Without these corrections when interference effects are present, either false positive or false negative determinations will result. Also, the reliability of an applied correction depends on the variance surrounding the measurement of the interfering element. As the concentration of the interfering element increases, the variance increases; this is reflected in the calculated apparent analyte concentration. Extreme caution should be exercised when reporting analyte concentrations where the apparent analyte concentration from an interfering element accounts for 90% of the measured analyte concentration. Once a routine procedure for correcting interelement spectral interferences has been established, it should be periodically tested to evaluate its operational effectiveness and continued reliability (Sect. 7.9).

4.1.2 Physical interferences - Are generally considered to be effects associated with the sample nebulization and transport processes. Such properties as change in viscosity and surface tension can cause significant inaccuracies especially in samples which may contain high dissolved solids and/or high acid concentrations. The use of a peristaltic pump may lessen these interferences. If these types of interferences are operative, they must be reduced by sample dilution and/or utilization of standard addition techniques (Sect. 9.8). Another problem which can occur from high dissolved solids is salt buildup at the tip of the nebulizer. This affects aerosol flow rate causing instrumental drift. Wetting the argon prior to nebulization, use of a tip washer, or sample dilution have been used to control this problem. Also, it has been reported that better control of the argon flow rate improves instrument performance. This is accomplished with the use of mass flow controllers.

4.1.3 Chemical Interferences - Are characterized by molecular compound formation, ionization effects and solute vaporization effects. Normally these effects are not pronounced with the ICP technique, however, if observed they can be minimized by careful selection of operating conditions (i.e., incident power, observation position, etc.), by buffering the sample, matrix matching, or standard addition procedures. These types of interferences can be highly dependent on matrix type and the specific analyte element.

4.1.4 Memory interferences - Result when analytes in a previous sample contribute to the signals measured in a current sample. Memory effects can result from sample deposition on the uptake tubing to the nebulizer or from build-up of sample material in the plasma torch and spray chamber. The site where these effects occur is dependent on the element and can be minimized by flushing the system with a rinse blank between samples (Sect. 7.5.3). The possibility of memory interferences should be recognized within an analytical run and suitable rinse times should be used to reduce them. The rinse times necessary for a particular element should be estimated prior to analysis. This may be achieved by aspirating a standard containing elements corresponding to either their LDRs or concentrations ten times those usually encountered. The aspiration time should be the same as a normal sample analysis period, followed by analysis of the rinse blank at designated intervals. The length of time required to reduce analyte signals to within a factor of two of the method detection limit should be noted. Until the required rinse time is established, this method recommends a rinse period of 60 sec between samples and standards. If a memory interference is suspected, the sample should be reanalyzed after a long rinse period.

4.2 The occurrence of interferences described in Sects. 4.1.1, 4.1.2 and 4.1.3 are primarily attributed to the sample matrix. If an interference caused by a particular sample matrix is known, in many cases it can be circumvented. However, when the nature of the sample is unknown, tests as outlined in Sects. 4.2.1 through 4.2.4 can be used to ensure the analyst that neither positive nor negative interference effects are operative on any of the analyte elements thereby distorting the accuracy of the reported values.

4.2.1 Serial dilution - If the analyte concentration is sufficiently high (minimally a factor of 10X the MDL after dilution), an analysis of a dilution should agree within 10% of the original determination or within an established acceptable control limit.[5] If not, a chemical or physical interference effect should be suspected.

4.2.2 Analyte addition - A post digestion analyte addition added at a minimum level of 20X the MDL (maximum 100X) to the original

determination should be recovered to within 90% to 110% or within an established control limit. If not, a matrix effect should be suspected. The use of a standard addition analysis procedure can usually compensate for this effect. **CAUTION:** The standard addition technique does not detect coincident spectral overlap. If suspected, use of computerized compensation, an alternative wavelength, or comparison with an alternative method is recommended (Sect. 4.2.3).

4.2.3 Comparison with alternative method of analysis - When investigating a sample matrix, comparison tests may be performed with other analytical techniques, such as atomic absorption spectrometry, ICP-mass spectrometry, or other approved methodology.

4.2.4 Wavelength scanning of analyte line region - If the appropriate equipment is available, wavelength scanning can be performed to detect potential spectral interferences.

5. SAFETY

5.1 The toxicity or carcinogenicity of each reagent used in this method has not been fully established. Each chemical should be regarded as a potential health hazard, and exposure to these compounds should be as low as reasonably achievable. Each laboratory is responsible for maintaining a current file of OSHA regulations regarding the safe handling of chemicals specified in this method [6-9]. A reference file of material data handling sheets should also be made available to all personnel involved in the chemical analysis. Specifically, concentrated nitric and hydrochloric acids are moderately toxic and extremely irritating to skin and mucus membranes. Use these reagents in a hood whenever possible and if eye or skin contact occurs, flush with large volumes of water. Always wear safety glasses or a shield for eye protection when working with these reagents.

5.2 Analytical plasma sources emit radiofrequency radiation and intense UV radiation. Suitable precautions should be taken to protect personnel from such hazards.

5.3 All personnel handling environmental samples known to contain or to have been in contact with human waste should be immunized against known disease causative agents.

5.4 Precautions should also be taken to minimize potential hazards. Basic good housekeeping and safety practices such as the use of rubber or plastic gloves and safety glasses during cleaning of labware are highly recommended.

6. APPARATUS AND EQUIPMENT

6.1 ANALYTICAL INSTRUMENTATION

6.1.1 The ICP instrument may be a simultaneous or sequential spectrometer system that uses ionized argon gas as the plasma. However, the system and processing of background corrected signals must be computer controlled. The instrument must be capable of meeting and complying with the requirements and description of the technique given in Sect. 2.1 of the method. In particular, it is the responsibility of the analyst to investigate the spectral interference (Sect. 4.1.1) operative about each analytical wavelength used and to verify and periodically confirm that the instrument configuration and operating conditions used satisfy the analytical requirements.

6.1.2 Argon gas supply - Liquid, high purity grade (99.99%).

6.1.3 A variable speed peristaltic pump is required to deliver both standard and sample solutions to the nebulizer.

6.1.4 Mass flow controllers to regulate the argon flow rates, especially the aerosol transport gas, are highly recommended. Their use will provide more exacting control of reproducible plasma conditions.

6.1.5 For routine analyses of solutions containing dissolved solids >1%, a high solids nebulizer and a torch injector tube having an i.d. >1.0 mm are recommended. (Consult the instrument manufacturer for guidance.)

6.1.6 For sustained analyses of solutions containing alkali concentrations >0.5%, an alumina torch injector tube is recommended to prevent devitrification of the normally-used quartz injector tube.

NOTE: Regular periodic cleaning of the quartz torch assembly and injector tube by soaking in aqua regia (Sect. 7.1.9) reduces background signal noise, calibration drift and potential memory effects.

6.2 SAMPLE PROCESSING EQUIPMENT

6.2.1 Air Displacement Pipetter: Digital pipet capable of delivering volumes ranging from 0.1 to 2500 μL with an assortment of high quality disposable pipet tips.

6.2.2 Hot Plate: Ceramic top, graduated dial 90°C to 450°C (Corning PC100 or equivalent).

6.2.3 Single pan balance: Balance capable of weighing to the nearest 0.01 g.

6.2.4 Analytical balance: Balance capable of weighing to the nearest 0.0001 g.

6.2.5 Centrifuge: Steel cabinet with guard bowl, electric timer and brake. (International Centrifuge, Universal Model UV or equivalent.)

6.2.6 Drying oven: Gravity convection oven, with thermostatic control capable of maintaining 180°C ± 5°C.

6.3 LABWARE - For the determination of trace levels of elements, contamination and loss are of prime consideration. Potential contamination sources include improperly cleaned laboratory apparatus and general contamination within the laboratory environment from dust, etc. A clean laboratory work area, designated for trace element sample handling must be used. Sample containers can introduce positive and negative errors in the determination of trace elements by (1) contributing contaminants through surface desorption or leaching, (2) depleting element concentrations through adsorption processes. All reuseable labware (glass, quartz, polyethylene, Teflon, etc.), including the sample container, should be cleaned prior to use. Labware should be soaked overnight and thoroughly washed with laboratory-grade detergent and water, rinsed with water, and soaked for four hours in a mixture of dilute nitric and hydrochloric acid (1+2+9), followed by rinsing with water, ASTM type I water, and oven drying.

NOTE: Chromic acid must not be used for cleaning glassware.

6.3.1 Glassware - Volumetric flasks, graduated cylinders, funnels and centrifuge tubes (glass and/or metal-free plastic).

6.3.2 Assorted calibrated pipettes.

6.3.3 Conical Phillips beakers, 250-mL with 50-mm watch glasses. Griffin beakers, 250-mL with 75-mm watch glasses. Teflon and/or quartz beakers, 250-mL with Teflon covers (optional).

6.3.4 Wash bottle - One piece stem, Teflon FEP bottle with Tefzel ETFE screw closure, 125-mL capacity.

7. REAGENTS AND CONSUMABLE MATERIALS

7.1 Reagents may contain elemental impurities which might affect analytical data. Only high-purity reagents should be used whenever possible. All acids used for this method must be of ultra high-purity grade. Suitable acids are available from a number of manufacturers or may be prepared by sub-boiling distillation.

7.1.1 Nitric acid, concentrated (sp.gr. 1.41) (CASRN 7697-37-2).

7.1.2 Nitric acid (1+1) - Add 500 mL conc. nitric acid to 400 mL of ASTM type I water and dilute to 1 L.

7.1.3 Nitric acid (1+9) - Add 100 mL conc. nitric acid to 400 mL of ASTM type I water and dilute to 1 L.

7.1.4 Hydrochloric acid, concentrated (sp.gr. 1.19) (CASRN 7647-01-0).

7.1.5 Hydrochloric acid (1+1) - Add 500 mL conc. hydrochloric acid to 400 mL of ASTM type I water and dilute to 1 L

7.1.6 Hydrochloric acid (1+4) - Add 200 mL conc. hydrochloric acid to 400 mL ASTM type I water and dilute to 1 L.

7.1.7 Ammonium hydroxide, concentrated (sp. gr. 0.902) (CASRN 1336-21-6).

7.1.8 Tartaric acid, ACS reagent grade (CASRN 87-69-4).

7.1.9 Aqua regia - Add 100 mL conc. nitric acid to 300 mL conc. hydrochloric acid and 100 mL ASTM type I water.

7.2 WATER - For all sample preparation and dilutions, ASTM type I water (ASTM D1193)[10] is required. Suitable water maybe prepared by passing distilled water through a mixed bed of anion and cation exchange resins.

7.3 STANDARD STOCK SOLUTIONS - May be purchased from a reputable commercial source or prepared from ultra high-purity grade chemicals or metals (99.99 - 99.999% pure). All salts should be dried for one hour at 105°C, unless otherwise specified. (**CAUTION**: Many metal salts are extremely toxic if inhaled or swallowed. Wash hands thoroughly after handling). Stock solutions should be stored in Teflon bottles.

The following procedures may be used for preparing standard stock solutions:

NOTE: Some metals, particularly those which form surface oxides require cleaning prior to being weighed. This may be achieved by pickling the surface of the metal in acid. An amount in excess of the desired weight should be pickled repeatedly, rinsed with water, dried and weighed until the desired weight is achieved.

7.3.1 Aluminum solution, stock 1 mL = 1000 μg Al: Pickle aluminum metal in warm (1+1) hydrochloric acid to an exact weight of 0.100 g. Dissolve in 10 mL conc. hydrochloric acid and 2 mL conc. nitric acid, heating to effect solution. Continue heating until volume is reduced to 4 mL. Cool and add 4 mL

ASTM type I water. Heat until volume is reduced to 2 mL. Cool and dilute to 100 mL with ASTM type I water.

7.3.2 Antimony solution, stock 1 mL = 500 μg Sb: Dissolve 0.100 g Sb powder in 2 mL (1+1) nitric acid and 1.0 mL conc. hydrochloric acid. Add 10 mL ASTM type I water and 0.15 g tartaric acid. Warm slightly to effect complete solution. Cool and dilute to 200 mL with ASTM type I water.

7.3.3 Arsenic solution, stock 1 mL = 1000 μg As: Dissolve 0.1320 g As_2O_3 in a mixture of 50 mL ASTM type I water and 1 mL conc. ammonium hydroxide. Heat gently to dissolve. Cool and acidify the solution with 2 mL conc. nitric acid. Dilute to 100 mL with ASTM type I water.

7.3.4 Barium solution, stock 1 mL = 500 μg Ba: Dissolve 0.1437 g $BaCO_3$ in a solution mixture of 10 mL ASTM type I water and 5 mL conc. nitric acid. Heat and stir to effect solution and degassing. Dilute to 200 mL with ASTM type I water.

7.3.5 Beryllium solution, stock 1 mL = 500 μg Be: Dissolve 1.965 g $BeSO_4.4H_2O$ (DO NOT DRY) in 50 mL ASTM Type I water. Add 2 mL conc. nitric acid. Dilute to 200 mL with ASTM type I water.

7.3.6 Boron solution, stock 1 mL = 1000 μg B: DO NOT DRY. Dissolve 0.5716 g anhydrous H_3BO_3 in 20 mL ASTM type I water. Dilute to 100 mL with ASTM type I water, mix and immediately transfer to a Teflon bottle for storage. Use a reagent meeting ACS specifications, keep the bottle tightly stoppered and store in a desiccator to prevent the entrance of atmospheric moisture.

7.3.7 Cadmium solution, stock 1 mL = 1000 μg Cd: Pickle cadmium metal in (1+9) nitric acid to an exact weight of 0.100 g. Dissolve in 5 mL (1+1) nitric acid, heating to effect solution. Cool and dilute to 100 mL with ASTM type I water.

7.3.8 Calcium solution, stock 1 mL = 1000 μg Ca: Suspend 0.2498 g $CaCO_3$ dried at 180°C for 1 hour before weighing, in 20 mL of ASTM type I water. Dissolve cautiously (reaction is vigorous) by adding dropwise, 10 mL (1+1) hydrochloric acid. Dilute to 100 mL with ASTM type I water.

7.3.9 Chromium solution, stock 1 mL = 500 μg Cr: Dissolve 0.1923g CrO_3 in a solution mixture of 10 mL ASTM type I water and 2 mL conc. nitric acid. Dilute to 200 mL with ASTM type I water.

7.3.10 Cobalt solution, stock 1 mL = 1000 μg Co: Pickle cobalt metal in (1+9) nitric acid to an exact weight of 0.100 g.

Dissolve in 5 mL (1+1) nitric acid, heating to effect solution. Cool and dilute to 100 mL with ASTM type I water.

7.3.11 Copper solution, stock 1 mL = 1000 μg Cu: Pickle copper metal in (1+9) nitric acid to an exact weight of 0.100 g. Dissolve in 5 mL (1+1) nitric acid, heating to effect solution. Cool and dilute to 100 mL with ASTM type I water.

7.3.12 Iron solution, stock, 1 mL = 1000 μg Fe: Pickle iron metal in (1+1) hydrochloric acid to an exact weight of 0.100 g. Dissolve in 10 mL (1+1) hydrochloric acid, heating to effect solution. Cool and dilute to 100 mL with ASTM type I water.

7.3.13 Lead solution, stock 1 mL = 1000 μg Pb: Dissolve 0.1599 g $PbNO_3$ in 5 mL (1+1) nitric acid. Dilute to 100 mL with ASTM type I water.

7.3.14 Lithium solution, stock 1 mL = 500 μg Li: Dissolve 0.5324 g Li_2CO_3 in 20 mL ASTM type I water. Add 2 mL conc. nitric acid and dilute to 200 mL with ASTM type I water.

7.3.15 Magnesium solution, stock 1 mL = 1000 μg Mg: Dissolve 0.100 g cleanly polished magnesium ribbon in 5 mL (1+1) hydrochloric acid. (Add acid slowly, reaction is vigorous) Add 2 mL (1+1) nitric acid and dilute to 100 mL with ASTM type I water.

7.3.16 Manganese solution, stock 1 mL = 1000 μg Mn: Pickle manganese flake in (1+9) nitric acid to an exact weight of 0.100 g. Dissolve in 5 mL (1+1) nitric acid, heating to effect solution. Cool and dilute to 100 mL with ASTM type I water.

7.3.17 Mercury solution, stock 1 mL = 500 μg Hg: <u>DO NOT DRY</u>, highly toxic, poison. Dissolve 0.1354 g $HgCl_2$ in 20 mL ASTM type I water. Add 10 mL conc. nitric acid and dilute to 200 mL with ASTM type I water.

7.3.18 Molybdenum solution, stock 1 mL = 1000 μg Mo: Dissolve 0.1500 g MoO_3 in a solution mixture of 10 mL ASTM type I water and 1 mL conc. ammonium hydroxide, heating to effect solution. Cool and dilute to 100 mL with ASTM type I water.

7.3.19 Nickel solution, stock 1 mL = 1000 μg Ni: Dissolve 0.100 g nickel powder in 5 mL conc. nitric acid, heating to effect solution. Cool and dilute to 100 mL with ASTM type I water.

7.3.20 Phosphorus solution, stock 1 mL = 1000 μg P: Dissolve 0.3745 g $NH_4H_2PO_4$ in 20 mL ASTM type I water. Dilute to 100 mL with ASTM type I water.

7.3.21 Potassium solution, stock, 1 mL = 1000 μg K: Dissolve 0.1907 g KCl, previously dried at 110°C for 3 hrs in 20 mL ASTM type I water. Add 2 mL (1+1) hydrochloric acid and dilute to 100 mL with ASTM type I water.

7.3.22 Selenium solution, stock 1 mL = 500 μg Se: Dissolve 0.1405 g SeO_2 in 20 mL ASTM type I water. Dilute to 200 mL with ASTM type I water.

7.3.23 Silica solution, stock, 1 mL = 1000 μg SiO_2: Do not dry. Dissolve 0.2964 g NH_4SiF_6 in 20 mL solution mixture of ASTM type I water and 1 mL conc. hydrochloric acid, heating at 85°C for 5 min to effect solution. Cool, dilute to 100 mL with ASTM type I water, mix and immediately transfer to Teflon bottle for storage.

7.3.24 Silver solution, stock 1 mL = 250 μg Ag: Dissolve 0.125 g silver metal in 10 mL (1+1) nitric acid, heating to effect solution. Cool and dilute to 500 mL with ASTM type I water. Store in amber container.

7.3.25 Sodium solution, stock 1 mL = 1000 μg Na: Dissolve 0.2542 g NaCl in 20 mL ASTM type I water. Add 2 mL (1+1) nitric acid and dilute to 100 mL with ASTM type I water.

7.3.26 Strontium solution, stock 1 mL = 500 μg Sr: Suspend 0.1685 g $SrCO_3$ in 20 mL ASTM type I water. Dissolve continuously by adding dropwise 10 mL (1+1) hydrochloric acid. Dilute to 200 mL with ASTM type I water.

7.3.27 Thallium solution, stock 1 mL = 500 μg Tl: Dissolve 0.1303 g $TlNO_3$ in a solution mixture of 10 mL ASTM type I water and 2 mL conc. nitric acid. Dilute to 200 mL with ASTM type I water.

7.3.28 Tin solution, stock 1 mL = 1000 μg Sn: Dissolve 0.100 g Sn shot in 20 mL (1+1) hydrochloric acid, heating to effect solution. Cool and dilute to 100 mL with (1+1) hydrochloric acid.

7.3.29 Vanadium solution, stock 1 mL = 1000 μg V: Pickle vanadium metal in (1+9) nitric acid to an exact weight of 0.100 g. Dissolve in 5 mL (1+1) nitric acid, heating to effect solution. Cool and dilute to 100 mL with ASTM type I water.

7.3.30 Yttrium solution, stock 1 mL = 1000 μg Y: Dissolve 0.1270 g Y_2O_3 in 5 mL (1+1) nitric acid, heating to effect solution. Cool and dilute to 1000 mL with ASTM type I water.

7.3.31 Zinc solution, stock 1 mL = 500 μg Zn: Pickle zinc metal in (1+9) nitric acid to an exact weight of 0.100 g. Dissolve in

10 mL (1+1) nitric acid, heating to effect solution. Cool and dilute to 200 mL with ASTM type I water.

7.4 MIXED CALIBRATION STANDARD (CAL) SOLUTIONS--Prepare mixed CAL solutions (Sects. 7.4.1 thru 7.4.5) by combining appropriate volumes of the stock standard solutions in 500-mL volumetric flasks. First, add 20 mL of (1+1) nitric acid and 20 mL of (1+1) hydrochloric acid, then add the appropriate stock standard aliquots and dilute to 500 mL with ASTM type I water. Prior to preparing the mixed CAL solutions, each stock solution should be analyzed separately to determine the presence of impurities. Transfer the freshly prepared mixed CAL solutions to an acid clean, not previously used FEP fluorocarbon or polyethylene bottles for storage. Fresh mixed CAL solutions should be prepared as needed with the realization that concentration can change on aging. The CAL solutions must be initially verified using a quality control sample and monitored weekly for stability (Sect. 7.12). Although not specifically required, the listed CAL solution combinations should be followed when using the specific wavelengths and recommended background correction locations listed in Table 1. If different combinations are used, the mixture should be verified for compatibility, stability and absence of spectral interference between analytes. This same requirement would apply if different wavelengths and/or background correction locations are utilized.

7.4.1 CAL Solution I (Volume = 500.0 mL)

Analyte	Stock Solution	Aliquot Vol. mL	Analyte Conc. µg/mL
Ag	7.3.24	1.0	0.5
As	7.3.3	5.0	10.0
B	7.3.6	1.0	2.0
Ba	7.3.4	1.0	1.0
Ca	7.3.8	5.0	10.0
Cd	7.3.7	1.0	2.0
Cu	7.3.11	1.0	2.0
Mn	7.3.16	1.0	2.0
Sb	7.3.2	5.0	5.0
Se	7.3.22	5.0	5.0

NOTE: If the addition of silver to the recommended acid combination results in an initial precipitation, add 15 mL of ASTM type I water and warm the flask until the solution clears. For the acid concentration used in the CAL solutions, the silver concentration should be limited to 0.5 mg/L. Higher concentrations of silver require additional hydrochloric acid.

7.4.2 CAL Solution II (Volume = 500.0 mL)

Analyte	Stock Solution	Aliquot Vol. mL	Analyte Conc. µg/mL
K	7.3.21	10.0	20.0
Li	7.3.14	5.0	5.0
Mo	7.3.18	5.0	10.0
Na	7.3.25	5.0	10.0
Sr	7.3.26	1.0	1.0

7.4.3 CAL Solution III (Volume = 500.0 mL)

Analyte	Stock Solution	Aliquot Vol. mL	Analyte Conc. µg/mL
Co	7.3.10	1.0	2.0
V	7.3.29	1.0	2.0
P	7.3.20	5.0	10.0

7.4.4 CAL Solution IV (Volume = 500.0 mL)

Analyte	Stock Solution	Aliquot Vol. mL	Analyte Conc. µg/mL
Al	7.3.1	5.0	10.0
Cr	7.3.9	5.0	5.0
Hg	7.3.17	2.0	2.0
SiO_2	7.3.23	5.0	10.0
Sn	7.3.28	2.0	4.0
Zn	7.3.31	5.0	5.0

7.4.5 CAL Solution V (Volume = 500.0 mL)

Analyte	Stock Solution	Aliquot Vol. mL	Analyte Conc. µg/mL
Be	7.3.5	1.0	1.0
Fe	7.3.12	5.0	10.0
Mg	7.3.15	5.0	10.0
Ni	7.3.19	1.0	2.0
Pb	7.3.13	5.0	10.0
Tl	7.3.27	5.0	5.0

7.5 BLANKS - Three types of blanks are required for this method. A calibration blank is used to establish the analytical calibration curve, a laboratory reagent blank is used to assess possible contamination from the sample preparation procedure and a rinse

blank is used to flush the instrument uptake system and nebulizer between standards and samples to reduce memory interferences.

7.5.1 Calibration blank - Prepare by diluting a mixture of 20 mL of (1+1) nitric acid and 20 mL of (1+1) hydrochloric acid to 500 mL with ASTM type I water. Store in a Teflon bottle.

7.5.2 Laboratory reagent blank (LRB) - Contains all the reagents in the same volumes used in processing the samples. The LRB must be carried through the entire preparation procedure and analysis scheme. The final solution should contain the same acid concentrations as sample solutions for analysis.

7.5.3 Rinse blank - Prepare this acid wash solution in the same manner as the calibration blank and store in a convenient manner.

7.6 PLASMA SOLUTION - This solution is used for determining the optimum viewing height of the plasma above the work coil prior to using the method (Sect. 9.3.3). The solution is prepared by adding a 5 mL aliquot from each of the stock standard solutions of arsenic (Sect. 7.3.3) and lead (Sect. 7.3.13), and a 10 mL aliquot from each of the stock standard solutions of selenium (Sect. 7.3.22) and thallium (Sect. 7.3.27), to a mixture of 20 mL (1+1) nitric acid and 20 mL (1+1) hydrochloric acid and diluting to 500 mL with ASTM type I water. Store in a Teflon bottle.

7.7 TUNING SOLUTION - This solution is used for adjusting the aerosol argon gas flow prior to calibration and analysis (Sect. 9.4). The solution is prepared by adding a 5 mL aliquot from each of the stock standard solutions of copper (Sect. 7.3.11) and lead (Sect. 7.3.13) to a mixture of 20 mL (1+1) nitric acid and 20 mL (1+1) hydrochloric acid and diluting to 500 mL with ASTM type I water. Store in a Teflon bottle.

7.8 LABORATORY PERFORMANCE CHECK (LPC) SOLUTION - This solution is prepared by adding the following listed aliquot volumes of the individual stock standards to the mixture of 20 mL (1+1) nitric acid and 20 mL (1+1) hydrochloric acid and diluting to 500 mL with ASTM type I water. Immediately transfer the freshly prepared LPC to an acid cleaned, not previously used, Teflon bottle.

Analyte	Stock Solution	Aliquot Vol. mL	Analyte Conc. µg/mL
Ag	7.3.24	1.0	0.5
Al	7.3.1	1.0	2.0
As	7.3.3	1.0	2.0
B	7.3.6	1.0	2.0
Ba	7.3.4	2.0	2.0
Be	7.3.5	2.0	2.0

Ca	7.3.8	1.0	2.0
Cd	7.3.7	1.0	2.0
Co	7.3.10	1.0	2.0
Cr	7.3.9	2.0	2.0
Cu	7.3.11	1.0	2.0
Fe	7.3.12	1.0	2.0
Hg	7.3.17	2.0	2.0
K	7.3.21	5.0	10.0
Li	7.3.14	2.0	2.0
Mg	7.3.15	1.0	2.0
Mn	7.3.16	1.0	2.0
Mo	7.3.18	1.0	2.0
Na	7.3.25	1.0	2.0
Ni	7.3.19	1.0	2.0
P	7.3.20	5.0	10.0
Pb	7.3.13	1.0	2.0
Sb	7.3.2	2.0	2.0
Se	7.3.22	2.0	2.0
SiO_2	7.3.23	5.0	10.0
Sn	7.3.28	1.0	2.0
Sr	7.3.26	2.0	2.0
Tl	7.3.27	2.0	2.0
V	7.3.29	1.0	2.0
Zn	7.3.31	2.0	2.0

7.9 SPECTRAL INTERFERENCE CHECK (SIC) SOLUTIONS - Once the interelement spectral interference correction factors have been determined (Sect. 4.1.1) and the procedural routine for their use has been established, the operative process should be periodically tested and updated as needed. It is usually not practical to test and update the entire corrective process on a daily or weekly basis. The frequency of confirming and/or updating the entire corrective process is the responsibility of the analyst and should be dictated by instrument stability, type of samples analyzed and the expected interference encountered. The following procedure is recommended for testing and verifying the interelement spectral correction process. A general description of the procedure is given in Sect. 7.9.1. In Sect. 7.9.2 thru 7.9.4 instructions are given for the preparation of SIC solutions that are specific to the wavelengths and background correction locations given in Table 1. The SIC solutions are designed to monitor and detect a 10% change in a partial list of the interference correction factors given in Table 3. The factors selected for monitoring were determined by dividing each of the listed correction factors by 10 and multiplying the quotient by the concentration of the interfering element in the respective SIC solution given below. If the resulting product was a number equal to or greater than two times the analyte MDL, the correction factor was included for monitoring.

7.9.1 Prepare an acid matrix solution of the interfering element at a high level of concentration (e.g., 50 mg/L). Complete 10 analyses of the solution and determine the standard deviation

of the mean concentration. From the data calculate a concentration equal to 4.52 times the standard deviation. (This calculated concentration estimates the 95% confidence interval of the interferent mean concentration). Multiply the calculated concentration by the correction factor to be tested. Disregarding the numerical sign of the product, add a concentration value equivalent to 2.2X the MDL of the analyte that is being corrected. The sum of the two concentrations, when bisected by the calibration blank, describes an acceptable apparent analyte concentration range. If the apparent analyte concentration from the analysis of the interferent solution is within the acceptable range, the correction process is considered to be in control. If the apparent analyzed concentration is outside the range, as either a positive or negative concentration, a change in the correction process is indicated and an update of the process may be required.

NOTE: The interfering solution should be analyzed more than once to confirm a change occurred with adequate rinse time between solutions and before the subsequent analysis of the calibration blank.

7.9.2 SIC solution I (50 mg/L Mo) - Add a 5 mL aliquot of the stock standard solution of molybdenum (Sect. 7.3.18) to a mixture of 4 mL (1+1) nitric acid and 4 ml (1+1) hydrochloric acid and dilute to 100 mL with ASTM type I water. Store in a Teflon bottle. This solution is used to evaluate the molybdenum interelement spectral correction factors on the analytes: Al, Sb, Se, Sn, and V. (See Table 3).

7.9.3 SIC solution II (10 mg/L Co; 20 mg/L Cr, Mn and V; and 40 mg/L Cu) - Add a 1 mL aliquot from the stock standard solution of cobalt (Sect. 7.3.10), a 2 mL aliquot from each of the stock standard solutions of manganese (Sect. 7.3.16) and vanadium (Sect. 7.3.29) and a 4 mL aliquot from the stock standard solutions of chromium (Sect. 7.3.9) and copper (7.3.11) to a mixture of 4 mL (1+1) nitric acid and 4 mL (1+1) hydrochloric acid and dilute to 100 mL with ASTM Type I water. Store in a Teflon bottle. This solution is used to evaluate the following list of interelement spectral correction factors (See Table 3).

Analyte	Interferent
Pb	Co
Sb	Cr
Mo	Mn
As	V
Be	V
Zn	Cu

7.9.4 SIC Solution III (20 mg/L Ni, 30 mg/L Al and 150 mg/L Fe) - Add a 2 mL aliquot from the stock standard solution of nickel (Sect. 7.3.19), a 3 mL aliquot from the stock standard solution of aluminum (Sect. 7.3.1) and a 15 mL aliquot from the stock standard solution of iron (Sect. 7.3.12) to a mixture of 4 mL (1+1) nitric acid and 4 mL (1+1) hydrochloric acid and dilute to 100 mL with ASTM Type 1 water. Store in a Teflon bottle. This solution is used to evaluate the following list of interelement spectral correction factors (See Table 3).

Analyte	Interferent
Sb	Ni
Zn	Ni
As	Al
Ag	Fe
Cr	Fe
Mn	Fe
V	Fe

7.10 LABORATORY FORTIFYING STOCK SOLUTION - This solution is used in preparing the laboratory fortified blank and the laboratory fortified sample matrix. Prepare the solution in a 200-mL volumetric flask by adding the following listed aliquot volumes of the individual stock solutions to a mixture of 4 mL (1+1) nitric acid and 20 mL (1+1) hydrochloric acid. Dilute to the mark with ASTM type I water. Transfer the freshly prepared solution to a Teflon bottle for storage.

Stock Analyte	Aliquot Solution	Analyte Vol. mL	Conc. µg/mL
Ag	7.3.24	2.0	2.5
Al	7.3.1	5.0	25
As	7.3.3	5.0	25
B	7.3.6	5.0	25
Ba	7.3.4	10.0	25
Be	7.3.5	2.0	5
Cd	7.3.7	2.0	10
Co	7.3.10	2.0	10
Cr	7.3.9	10.0	25
Cu	7.3.11	5.0	25
Fe	7.3.12	5.0	25
Hg	7.3.17	2.0	5
Li	7.3.14	10.0	25
Mn	7.3.16	5.0	25
Mo	7.3.18	2.0	10
Ni	7.3.19	5.0	25
P	7.3.20	10.0	50
Pb	7.3.13	5.0	25

Sb	7.3.2	10.0	25
Se	7.3.22	10.0	25
SiO_2	7.3.23	5.0	25
Sn	7.3.28	2.0	10
Sr	7.3.26	10.0	25
Tl	7.3.27	10.0	25
V	7.3.29	2.0	10
Zn	7.3.31	10.0	25

NOTE: The analytes Ca, K, Mg, and Na are not included in the fortifying stock solution because their concentrations vary widely in environmental samples. The analytes B and SiO_2 should be disregarded if samples are processed and diluted in borosilicate labware because of the known contamination that occurs from borosilicate glass.

7.11 LABORATORY FORTIFIED BLANK (LFB) - To a 100 mL aliquot of ASTM type water add 2 mL of (1+1) nitric acid, 1.0 mL (1+1) hydrochloric acid and 2 mL of the laboratory fortifying stock solution (Sect. 7.10). The LFB must be carried through the entire sample preparation procedure and analysis scheme. The final solution should be diluted to 50 mL as are the samples. Listed below is the expected concentration of each analyte based on the original 100 mL of water.

Analyte	Conc. µg/mL
Ag	0.05
Al	0.5
As	0.5
B	0.5
Ba	0.5
Be	0.1
Cd	0.2
Co	0.2
Cr	0.5
Cu	0.5
Fe	0.5
Hg	0.1
Li	0.5
Mn	0.5
Mo	0.2
Ni	0.5
P	1.0
Pb	0.5
Sb	0.5
Se	0.5
SiO_2	0.5
Sn	0.2
Sr	0.5
Tl	0.5
V	0.2
Zn	0.5

7.12 QUALITY CONTROL SAMPLE - The quality control sample (Sect. 3.18) should be prepared in the same acid matrix as the calibration standards at a concentration near 1 mg/L, except silver, which must be limited to a concentration of 0.5 mg/L. Follow the instructions provided by the supplier and store the sample in a Teflon bottle. The Quality Assurance Research Division of EMSL-Cincinnati will either supply a quality control sample or provide information where one of equal quality can be procured.

8. SAMPLE COLLECTION, PRESERVATION AND STORAGE

8.1 Prior to collection of an aqueous sample, consideration should be given to the type of data required, (i.e., dissolved or total recoverable), so that appropriate preservation and pretreatment steps can be taken. Filtration, acid preservation, etc., should be performed at the time of sample collection or as soon thereafter as practically possible.

8.2 For determination of dissolved elements, the sample must be filtered through a 0.45-μm membrane filter. (Glass or plastic filtering apparatus is recommended to avoid possible contamination. Only plastic apparatus should be used when determination of boron or silica is critical (Sect.1.6). Use a portion of the filtered sample to rinse the filter flask, discard this portion and collect the required volume of filtrate. Acidify the filtrate with (1+1) nitric acid immediately following filtration to a pH < 2.

8.3 For the determination of total recoverable elements in aqueous samples, acidify with (1+1) nitric acid at the time of collection to a pH < 2 (normally, 3 mL of (1+1) acid per liter of sample is sufficient for most ambient and drinking water samples). The sample should not be filtered prior to analysis (Sect. 1.6).

NOTE: Samples that cannot be acid preserved at the time of collection because of sampling limitations or transport restrictions should be acidified with nitric acid to a pH < 2 upon receipt in the laboratory. Following acidification, the sample should be held for 16 hours before withdrawing an aliquot for sample processing.

8.4 Solid samples usually require no preservation prior to analysis other than storage at 4°C.

9. CALIBRATION AND STANDARDIZATION

9.1 Recommended wavelengths and background correction locations are listed in Table 1. Other wavelengths and background correction locations may be substituted if they can provide the needed sensitivity and are corrected for spectral interference. In Table 4 specific instrument operating conditions are recommended. However, because of the difference among various makes and models of spectrometers, the analyst should follow the instrument manufacturer's

instructions, and if possible, approximate the recommended operating conditions.

9.2 Allow the instrument to become thermally stable before beginning. This usually requires at least 30 min of operation prior to plasma optimization, plasma tuning and/or calibration.

9.3 PLASMA OPTIMIZATION - Prior to the use of this method optimize the plasma operating conditions using the following procedure. The purpose of plasma optimization is to provide a maximum signal to background ratio for the least sensitive element in the analytical array. The use of a mass flow controller to regulate the nebulizer gas flow rate greatly facilitates the procedure.

9.3.1 Select an appropriate incident rf power with minimum reflected power (see Table 4 for recommendations) and aspirate the 1000 µg/mL solution of yttrium (Sect. 7.3.30). Following the instrument manufacturer's instructions adjust the aerosol carrier gas flow rate through the nebulizer so a definitive blue emission region of the plasma extends approximately from 5 to 20 mm above the top of the work coil.[11] Record the nebulizer gas flow rate or pressure setting for future reference.

9.3.2 After establishing the nebulizer gas flow rate, determine the solution uptake rate of the nebulizer in mL/min by aspirating a known volume acid blank for a period of at least 3 min. Divide the spent volume by three and record the uptake rate. Set the peristaltic pump to deliver the uptake rate in a steady even flow.

9.3.3 After horizontally aligning the plasma and/or optically profiling the spectrometer, use the selected instrument conditions from Sects. 9.3.1 and 9.3.2, and aspirate the plasma solution (Sect. 7.7), containing 10 µg/mL each of As, Pb, Se and Tl. Collect intensity data at the wavelength peak for each analyte at 1 mm intervals from 14 to 18 mm above the top of the work coil. (This region of the plasma is commonly referred to as the analytical zone.)[12] Repeat the process using the calibration blank. Determine the net signal to blank intensity ratio for each analyte for each viewing height setting. Choose the height for viewing the plasma that provides the largest intensity ratio for the least sensitive element of the four analytes. If more than one position provides the same ratio, select the position that provides the best compromise of intensity ratios of all four analytes.

9.3.4 The instrument operating condition finally selected as being optimum should provide the lowest reliable IDLs and MDLs similar to those listed in Table 2.

9.3.5 If either the instrument operating conditions, (such as incident power and/or nebulizer gas flow rate) are changed, or a new torch injector tube having a different orifice i.d. is installed, the plasma and plasma viewing height should be reoptimized.

9.3.6 Before daily calibration and after the instrument warm-up period (Sect. 9.2), the nebulizer gas flow must be reset to the determined optimized flow. If a mass flow controller is being used, it should be either reset to the recorded optimized flow rate or the optional plasma tuning procedure given in Sect. 9.4 should be followed to reconfigure the plasma. In order to provide and maintain valid interelement spectral correction factors the nebulizer gas flow rate must be well controlled. The change in signal intensity with a change in nebulizer gas flow rate for both "hard" (Pb 220.353 nm) and "soft" (Cu 324.754 nn) lines is illustrated in Figure 1.

9.4 PLASMA TUNING (Optional) - This procedure can be used on a daily basis to collect the data necessary for fine tuning the plasma to a set Cu/Pb concentration ratio that reflects the optimized conditions determined in Sect. 9.3. The analytical zone of the plasma can be altered by varying the aerosol carrier gas flow entering the plasma. This procedure requires the use of a mass flow controller for adjusting the nebulizer gas flow rate to reset the Cu/Pb concentration ratio. (This procedure can be used even when the front surface entrance optics degrade in a non-uniform manner over the visible and ultraviolet wavelength regions.)

9.4.1 Set the instrument to the optimized operating conditions (Sect. 9.3). After instrument warm-up, horizontal alignment of the plasma and/or optical profiling of the spectrometer, aspirate the tuning solution (Sect. 7.7) and collect 10 replicate measurements of the Cu (324.75 nm) and Pb (220.35 nm) intensity signals at every 25 mL/min interval over the flow rate range of 500 to 800 mL/min. Repeat the operation using the calibration blank solution. Subtract the respective mean blank value and calculate the net mean intensity value for both metals at each flow rate. Plot the net mean intensity values versus flow rate as illustrated in Figure 1. From the plot determine the maximum signal intensity flow rate for each metal.

9.4.2 To determine the Cu/Pb concentration ratio, set the instrument to the optimized operating conditions. After warm-up and optical profiling, calibrate the instrument for both Cu (324.75 nm) and Pb (220.35 nm) at their respective maximum intensity flow rates (See Figure 1, Cu 750 mL/min, Pb 535 mL/min) with the calibration blank set at the optimum flow (e.g., 620 mL/min).

9.4.3 Reset the nebulizer gas flow to the rate established in Sect. 9.3.1 (e.g., 620 mL/min) and collect data from 10 replicate analyses of the tuning solution (Sect. 7.6). Ratio the determined copper concentration to the determined lead concentration on each analysis and compute the standard deviation and mean value of the 10 ratios. (Note: Disregard the fact that the determined concentrations do not equal the prepared concentrations of the tuning solution.) The mean value is used for resetting the ratio on a daily basis.

9.4.4 For tuning the plasma on a daily basis calibrate the instrument as described in Sect. 9.4.2. Reset the nebulizer gas flow rate to the optimum flow (e.g. 620 mL/min) and analyze the tuning solution. Calculate the Cu/Pb concentration ratio from the analysis. If the calculated ratio is not within two standard deviations of the mean value established in Sect. 9.4.3, adjust the nebulizer gas flow and reanalyze the tuning solution until the ratio is within range. Lowering the gas flow rate will increase the lead concentration, decrease the copper concentration, and, therefore, lower the ratio. The opposite is true when the gas flow is increased. Day-to-day variations in the nebulizer gas flow should be < ± 10 mL/min. Larger changes should alert the analyst to possible instrumental problems.

9.4.5 Once an acceptable ratio is achieved, the instrument is ready for analytical calibration.

9.4.6 If either the selected instrument operating conditions are changed or instrument components replaced that require the plasma to be reoptimized (Sect. 9.3.5), the Cu/Pb concentration ratio must be reestablished.

9.5 CALIBRATION - Calibrate the instrument according to the instrument manufacturer's instructions using the prepared calibration blank (Sect. 7.5.1) and CAL solutions (Sect. 7.4). The following operational steps should be used for both CAL solutions and samples.

9.5.1 Using a peristaltic pump introduce the standard or sample to nebulizer at a uniform rate (e.g., 1.2 mL/min).

9.5.2 To allow equilibrium to be reached in the plasma, aspirate the standard or sample solution for 30 sec after reaching the plasma before beginning integration of the background corrected signal.

9.5.3 When possible use the average value of four 5 sec background corrected integration periods as the atomic emission signal to be correlated to analyte concentration.

9.5.4 Between each standard or sample, flush the nebulizer and solution uptake system with the rinse blank acid solution

(Sect. 7.5.3) for 60 sec or for the required period of time to ensure that analyte memory effects are not occurring.

9.6 Analyze the LPC solution (Sect. 7.8) and calibration blank (Sect. 7.5.1) immediately following calibration, after every tenth sample and at the end of the sample run. The analyzed value of each analyte in the LPC solution should be within 95% to 105% of its expected value. If an analyte value is outside the interval, reanalyze the LPC. If the analyte is again outside the ± 5% limit, the instrument should be recalibrated and all samples following the last acceptable LPC solution should be reanalyzed.

9.7 Periodically verify the validity of the interelement spectral interference correction process. The frequency of this testing is the responsibility of the analyst, however, confirmation prior to analysis of solid sample extracts is particularly useful. See Sect. 7.9 for guidance and criteria.

9.8 If methods of standard addition are required, the following procedure is recommended.

9.8.1 The standard addition technique[13] involves preparing new standards in the sample matrix by adding known amounts of standard to one or more aliquots of the processed sample solution. This technique compensates for a sample constituent that enhances or depresses the analyte signal thus producing a different slope from that of the calibration standards. It will not correct for additive interference that causes a baseline shift. The simplest version of this technique is the single-addition method. The procedure is as follows. Two identical aliquots (Volume V_x) of the sample solution, are taken. To the first (labeled A) is added a small volume V_s of a standard analyte solution of concentration c_s. To the second (labeled B) is added the same volume V_s of the solvent. The analytical signals of A and B are measured and corrected for non-analyte signals. The unknown sample concentration c_x is calculated:

$$c_x = \frac{S_B \, V_s \, c_s}{(S_A - S_B) \, V_x}$$

where S_A and S_B are the analytical signals (corrected for the blank) of solutions A and B, respectively. V_s and c_s should be chosen so that S_A is roughly twice S_B on the average. It is best if V_s is made much less than V_x, and thus c_s is much greater than c_x, to avoid excess dilution of the sample matrix. If a separation or concentration step is used, the additions are best made first and carried through the entire procedure. For results from this technique to be valid, the following limitations must be taken into consideration:

1. The analytical curve must be linear.

2. The chemical form of the analyte added must respond the same as the analyte in the sample.

3. The interference effect must be constant over the working range of concern.

4. The signal must be corrected for any additive interference.

10. QUALITY CONTROL

10.1 Each laboratory using this method is required to operate a formal quality control (QC) program. The minimum requirements of this program consist of an initial demonstration of laboratory capability and analysis of laboratory reagent blanks and fortified blanks and samples as a continuing check on performance. The laboratory is required to maintain performance records that define the quality of data generated.

10.2 INITIAL DEMONSTRATION OF PERFORMANCE.

10.2.1 The initial demonstration of performance is used to characterize instrument performance (MDLs and linear calibration ranges) and laboratory performance (analysis of quality control sample) for analyses conducted by this method.

10.2.2 MDLs should be established for all analytes, using reagent water (blank) fortified at a concentration of two to three times the estimated detection limit[4]. To determine MDL values, take seven replicate aliquots of the fortified reagent water and process through the entire analytical method. Perform all calculations defined in the method and report the concentration values in the appropriate units. Calculate the MDL as follows:

$$MDL = (t) \times (S)$$

where, t = Student's t value for a 99% confidence level and a standard deviation estimate with n-1 degrees of freedom [t = 3.14 for seven replicates].

S = standard deviation of the replicate analyses.

MDLs should be determined every six months or whenever there is a significant change in the background or instrument response.

10.2.3 Linear calibration ranges - The upper limit of the linear calibration range should be established for each analyte by determining the signal responses from a minimum of three

different concentration standards, one of which is close to the upper limit of the linear range. The linear calibration range which may be used for the analysis of samples should be judged by the analyst from the resulting data. Linear calibration ranges should be determined whenever there is a significant change in instrument response and every six months for those analytes that periodically approach their linear limit.

10.2.4 Quality Control Sample (QCS) - When beginning the use of this method and on a quarterly basis, verify acceptable laboratory performance with the preparation and analyses of a quality control sample (Sect. 7.12). The QCS is carried through the entire analytical operation of the method. If the determined concentrations are not within ± 5% of the stated values of 1 mg/L, laboratory performance is unacceptable. The source of the problem should be identified and corrected before continuing analyses.

10.3 ASSESSING LABORATORY PERFORMANCE - REAGENT AND FORTIFIED BLANKS

10.3.1 Laboratory reagent blank (LRB) - The laboratory must analyze at least one LRB (Sect. 7.5.2) with each set of samples. LRB data are used to assess contamination from the laboratory environment. If an analyte value in the reagent blank exceeds its determined MDL, then laboratory or reagent contamination should be suspected. Any determined source of contamination should be corrected and the samples reanalyzed.

10.3.2 Laboratory fortified blank (LFB) - The laboratory must analyze at least one LFB (Sect. 7.11) with each batch of samples. Calculate accuracy as percent recovery (Sect. 10.4.2). If the recovery of any analyte falls outside the control limits (Sect. 10.3.3), that analyte is judged out of control, and the source of the problem should be identified and resolved before continuing analyses.

10.3.3 Until sufficient LFB data become available (usually a minimum of 20 to 30 analyses), the laboratory should assess laboratory performance against recovery limits of 85-115%. When sufficient internal performance data becomes available, develop control limits from the percent mean recovery (x) and the standard deviation (S) of the mean recovery. These data are used to establish upper and lower control limits as follows:

$$\text{UPPER CONTROL LIMIT} = x + 3S$$
$$\text{LOWER CONTROL LIMIT} = x - 3S$$

After each five to ten new recovery measurements, new control limits should be calculated using only the most recent 20 to 30 data points.

10.4 ASSESSING ANALYTE RECOVERY - LABORATORY FORTIFIED SAMPLE MATRIX

10.4.1 The laboratory must add a known amount of each analyte to a minimum of 10% of the routine samples or one sample per sample set, whichever is greater. Ideally for water samples, the analyte concentration should be the same as that used in the LFB (Sect. 10.3.2). This is also recommended for solid samples, however, the concentration added should be expressed as mg/kg and calculated by multiplying the values given in Sect. 7.11 by the factor 100. Over time, samples from all routine sample sources should be fortified.

10.4.2 Calculate the percent recovery for each analyte, corrected for background concentrations measured in the unfortified sample, and compare these values to the control limits established in Sect. 10.3.3 for the analyses of LFBs. Recovery calculations are not required if the concentration added is less than 10% of the sample background concentration. Percent recovery may be calculated in units appropriate to the matrix, using the following equation:

$$R = \frac{C_s - C}{s} \times 100$$

where, R = percent recovery.
C_s = fortified sample concentration.
C = sample background concentration.
s = concentration equivalent of analyte added to sample.

10.4.3 If recovery of any analyte falls outside the designated range and laboratory performance for that analyte is shown to be in control (Sect. 10.3), the recovery problem encountered with the fortified sample is judged to be matrix related, not system related. The data user should be informed that the result for that analyte in the unfortified sample is suspect due to matrix effects and analysis by method of standard addition (Sect. 9.8) should be considered.

11. PROCEDURE

11.1 AQUEOUS SAMPLE PREPARATION - DISSOLVED ELEMENTS

11.1.1 For the determination of dissolved elements in ground and surface waters, take a 100 mL (± 1 mL) aliquot of the filtered acid preserved sample, add 2 mL of (1+1) nitric acid

and 1 mL (1+1) hydrochloric acid. The sample is now ready for analysis. Allowance for sample dilution should be made in the calculations.

NOTE: If a precipitate is formed during acidification, transport or storage, the sample aliquot must be treated using the procedure in Sect. 11.2.1 prior to analysis.

11.2 AQUEOUS SAMPLE PREPARATION - TOTAL RECOVERABLE ELEMENTS

11.2.1 For determination of total recoverable elements in water or waste water, other than marine and estuarine water, take a 100 mL (± 1 mL) aliquot from a well mixed, acid preserved sample and transfer it to a 250-mL Griffin beaker. [For drinking water compliance monitoring certain analytes require 4X preconcentration prior to analysis (Sect. 1.7)]. Add 2 mL of (1+1) nitric acid and 1.0 mL of (1+1) hydrochloric acid. Heat the sample on a hot plate at 85°C until the volume has been reduced to approximately 20 mL, ensuring that the sample does not boil. (A spare beaker containing 20 mL of water can be used as a gauge.)

NOTE: For proper heating adjust the temperature control of the hot plate such that an uncovered beaker containing 50 mL of water located in the center of the hot plate can be maintained at a temperature no higher than 85°C. Evaporation time for 100 mL of sample at 85°C is approximately 2 h with the rate of evaporation rapidly increasing as the sample volume approaches 20 mL.

Cover the beaker with a watch glass and reflux for 30 min. Slight boiling may occur but vigorous boiling should be avoided. Allow to cool and quantitatively transfer to either a 50-mL volumetric or a 50-mL class A stoppered graduated cylinder. Dilute to volume with ASTM type I water and mix. Centrifuge the sample or allow to stand overnight to separate insoluble material. The sample is now ready for analysis. Because the effects of various matrices on the stability of diluted samples cannot be characterized, samples should be analyzed as soon as possible after preparation.

11.2.2 For determination of total recoverable elements in marine and estuarine water, take a 100 mL aliquot from a well mixed, acid preserved sample and transfer to a 250-mL Griffin beaker. Add 2 mL of (1+1) nitric acid and heat on a hot plate at 85°C until the volume has been reduced to approximately 25 mL, ensuring that the sample does not boil. (See **NOTE** in Sect. 11.2.1). Cover the beaker with a watch glass and reflux for 30 min. Slight boiling may occur but vigorous boiling should be avoided. Allow to cool and dilute to 100 mL with ASTM type I water. Centrifuge the sample or allow to

stand overnight to separate insoluble material. The sample is now ready for analysis by the method of standard addition (Sect. 9.8). Because the effects of various matrices on the stability of diluted samples cannot be characterized, samples should be analyzed as soon as possible after preparation.

11.3 SOLID SAMPLE PREPARATION - TOTAL RECOVERABLE ELEMENTS

11.3.1 For determination of total recoverable elements in solid samples (sludge, soils, and sediments), mix the sample thoroughly to achieve homogeneity and weigh accurately a 1.0 ± 0.01 g portion of the sample. Transfer to a 250-mL Phillips beaker. Add 4 mL (1+1) nitric acid and 10 mL (1+4) hydrochloric acid. Cover with a watch glass. Heat the sample on a hot plate and gently reflux for 30 min. Very slight boiling may occur, however, vigorous boiling must be avoided to prevent the loss of the $HCl-H_2O$ azeotrope.

NOTE: For proper heating adjust the temperature control of the hot plate such that an uncovered Griffen beaker containing 50 mL of water located in the center of the hot plate can be maintained at a temperature of approximately but no higher than 85°C.

Allow the sample to cool and quantitatively transfer to 100-mL volumetric flask. Dilute to volume with ASTM type I water and mix. Centrifuge the sample or allow to stand overnight to separate insoluble material. The sample is now ready for analysis. Because the effects of various matrices on the stability of diluted samples cannot be characterized, samples should be analyzed as soon as possible after preparation.

NOTE: Determine the percent solids in the sample for calculating and reporting data on a dry weight basis. To determine the dry weight, transfer a separate, uniform 1 g aliquot to an evaporating dish and dry to a constant weight at 103-105°C.

11.4 SAMPLE ANALYSIS

11.4.1 Analyze the samples by the procedural routine described in Sects. 9.5, 9.6 and 9.7. If method of standard additions are required follow the instructions given in Sect. 9.8. Samples having concentrations higher than the established linear dynamic range (LDR) should be diluted into range and reanalyzed. The sample may first be analyzed for trace analytes providing the elements in high concentration do not cause a severe matrix effect and any interelement spectral interference or shift in background intensity can be properly corrected.

11.4.2 For drinking water compliance monitoring, if the concentration of a primary contaminant is determined to be 90% of its MCL or above and the combined Mg and Ca concentration equals 500 mg/L, the sample should be analyzed by the standard addition technique (Sect. 9.8).

12. CALCULATIONS

12.1 Sample data should be reported in units of mg/L for aqueous samples and mg/kg dry weight for solid samples. Do not report element concentrations below the determined MDL.

12.2 For aqueous samples prepared by total recoverable procedure (Sect. 11.2.1), multiply solution concentrations by the dilution factor 0.5. Round the data to the thousandth place and report the data in mg/L up to three significant figures.

12.3 For estuarine and marine water samples prepared by total recoverable procedure (Sect. 11.2.2), read the concentration directly from the instrument and calculate the sample concentration by the procedure described in Sect. 9.8. Round the data to the thousandth place and report the data in mg/L up to three significant figures.

12.4 For solid samples prepared by total recoverable procedure (Sect. 11.3) round the solution concentrations (µg/mL in the analysis solution) to the thousandth place and multiply by the dilution factor 100. Report the data to a 0.1 mg/kg up to three significant figures taking into account the percent solids as noted in Sect. 11.3 when the data are reported on a dry weight basis.

12.5 If additional dilutions were performed or if a drinking water sample was preconcentrated 4x for analysis, the appropriate factor must be applied to sample values.

12.6 The QC data obtained during sample analyses provide an indication of the quality of the sample data and should be provided with the sample results.

13. PRECISION AND ACCURACY

13.1 Listed in Table 2 are MDLs determined using the procedure described in Sect. 10.2.2. The MDLs were determined in the reagent blank matrix (best case situation) following sample preparation given in Sect. 11.2.1. Teflon beakers were used to avoid boron and silica contamination from glassware with the final dilution to 50 mL completed in polypropylene centrifuged tubes.

13.2 Data obtained from single laboratory method testing are summarized in Table 5 for five types of water samples consisting of drinking water, surface water, ground water, and two wastewater effluents. Samples were prepared using the procedure described in Sect. 11.2.1.

For each matrix, five replicate aliquots were prepared, analyzed and the average of the five determinations used to define the sample background concentration of each analyte. In addition, two pairs of duplicates were fortified at different concentration levels. For each method analyte, the sample background concentration, mean percent recovery, standard deviation of the percent recovery, and relative percent difference between the duplicate fortified samples are listed in Table 5. The variance of the five replicate sample background determinations is included in the calculated standard deviation of the percent recovery when the analyte concentration in the sample was greater than the MDL. The tap and well waters were processed in Teflon and quartz beakers and diluted in polypropylene centrifuged tubes. The nonuse of borosilicate glassware is reflected in the precision and recovery data for boron and silica in those two sample types.

13.3 Data obtained from single laboratory method testing are summarized in Table 6 for three solid samples consisting of EPA 884 Hazardous Soil, SRM 1645 River Sediment, and EPA 286 Electroplating Sludge. Samples were prepared using the procedure described in Sect. 11.3. For each method analyte, the sample background concentration, mean percent recovery of the fortified additions, the standard deviation of the percent recovery, and relative percent difference between duplicate additions were determined as described in Sect. 13.2.

13.4 Data obtained from single laboratory method testing when using the procedure given in Sect. 11.2.1 but utilizing the 4X preconcentration step prior to analysis as required for the determination of certain drinking water contaminants are summarized in Table 7. Seven replicate aliquots of Cincinnati, Ohio, tapwater were prepared and analyzed to determine background concentrations. In addition, two more sets of seven replicates each were fortified at different levels of concentration with an attempt to bracket or match either current or proposed Maximum Contaminant Level concentrations. For each method analyte, the sample background concentration, concentration added, mean percent recovery of the fortified addition, and relative standard deviation of the mean recovery are listed in Table 7. All aliquots were processed in Teflon beakers and diluted to volume in polypropylene centrifuged tubes. The sample analyte less than values indicate 4X MDLs. The 4X MDL values for the analytes: Al, B, Ba, Mn, Sr and Zn are 0.01, 0.002, 0.0003, 0.0002, 0.0002 and 0.001 mg/L, respectively.

14. REFERENCES

1. Larson, G.F., V.A. Fassel, R.K. Winge and R.N. Kniseley, "Ultratrace Analysis by Optical Emission Spectroscopy: The Stray Light Problem." Applied Spectroscopy 30:384 (1976).

2. Botto, R. I., "Quality Assurance in Operating a Multielement ICP Emission Spectrometer," Spectrochem. Act. 39B:95 (1984).

3. Botto, R.I., "Long-term Stability of Spectral Interference Calibrations for Inductively Coupled Plasma Atomic Emission Spectrometry," Analytical Chemistry, 54:1654 (1982).

4. Code of Federal Regulations 40, Ch. 1, Pt. 136 Appendix B.

5. Handbook for Analytical Quality Control in Water and Wastewater Laboratories, EPA-600/4-79-019.

6. "Carcinogens - Working With Carcinogens," Department of Health, Education, and Welfare, Public Health Service, Center for Disease Control, National Institute for Occupational Safety and Health, Publication No. 77-206, Aug. 1977.

7. "OSHA Safety and Health Standards, General Industry," (29 CFR 1910), Occupational Safety and Health Administration, OSHA 2206, (Revised, January 1976).

8. "Safety in Academic Chemistry Laboratories, American Chemical Society Publication, Committee on Chemical Safety, 3rd Edition, 1979.

9. "Proposed OSHA Safety and Health Standards, Laboratories," Occupational Safety and Health Administration, Federal Register, July 24, 1986.

10. Annual Book of ASTM Standards, Volume 11.01.

11. Wallace, G.F., "Some Factors Affecting the Performance of an ICP Sample Introduction System," Atomic Spectroscopy, Vol. 4, pp. 188-192 (1983).

12. Koirtyohann, S.R., J.S. Jones and D.A. Yates, "Nomenclature System for the Low-Power Argon Inductively Coupled Plasma," Analytical Chemistry, 52:1965 (1980).

13. Winefordner, J.D., "Trace Analysis: Spectroscopic Methods for Elements," Chemical Analysis, Vol. 46, pp. 41-42.

14. ADDITIONAL BIBLIOGRAPHY

14.1 Winge, R.K., V.A. Fassel, V.J. Peterson and M.A. Floyd, "Inductively Coupled Plasma-Atomic Emission Spectroscopy: An

Atlas of spectral Information," Physical Science Data 20, Elsevier Science, 1985.

14.2 Winge, R.K., V.A. Fassel, R.N. Kniseley, F. DeKalb and W.J. Haas, Jr., "Determination of Trace Elements in Soft, Hard and Saline Waters by Inductively Coupled Plasma, Multi-Element Atomic Emission spectroscopic (ICP-AES) Technique," Spectrochemica Acta, 32B:327 (1977).

14.3 Garbarino, J.R. and Taylor, H.E., "An Inductively-Coupled Plasma Atomic Emission Spectrometric Method for Routine Water Quality Testing," Applied Spectroscopy 33, No. 3(1979).

14.4 Method 200.7, Inductively Coupled Plasma-Atomic Emission Spectrometer Method for Trace Element Analysis of Water and Wastes. Revision 1.0, July, 1979, U.S. Environmental Protection Agency, Office of Research and Development, Environmental Monitoring and Support Laboratory, Cincinnati, Ohio 45268.

14.5 Appendix to Method 200.7, Inductively Coupled Plasma Atomic Analysis of Drinking Water, Revision 1.3, March, 1987, U.S. Environmental Protection Agency, Office of Research and Development, Environmental Monitoring Systems Laboratory, Cincinnati, Ohio 45268.

TABLE 1. RECOMMENDED WAVELENGTHS WITH LOCATIONS FOR BACKGROUND CORRECTION AND ESTIMATED INSTRUMENT DETECTION LIMITS (IDL)

Analyte	Wavelength, nm[1]	Location for Bkgd. Correction	Estimated IDLs mg/L[(2)]
Ag	328.068	+0.070 nm	0.005
Al	308.215	+0.070 nm	0.05
As	193.696	+0.070 nm	0.03
B	249.678x2	+0.035 nm	0.006
Ba	493.409	-0.064 nm	0.001
Be	313.042	-0.064 nm	0.0007
Ca	315.887	+0.070 nm	0.02
Cd	226.502	+0.070 nm	0.002
Co	228.616	-0.064 nm	0.007
Cr	205.552x2	-0.032 nm	0.007
Cu	324.754	-0.064 nm	0.003
Fe	259.940	+0.070 nm	0.007
Hg	194.227x2	-0.032 nm	0.02
K	766.491	-0.064 nm	0.7
Li	670.784	+0.070 nm	0.005
Mg	279.079	-0.064 nm	0.03
Mn	257.610	+0.070 nm	0.0008
Mo	203.844	-0.064 nm	0.02
Na	588.995	+0.070 nm	0.03
Ni	231.604x2	+0.035 nm	0.009
P	214.914x2	+0.035 nm	0.09
Pb	220.353	-0.064 nm	0.03
Sb	206.833	+0.070 nm	0.03
Se	196.090	+0.070 nm	0.08
SiO_2	251.611	-0.064 nm	0.02
Sn	189.980x2	-0.032 nm	0.02
Sr	421.552	+0.070 nm	0.0006
Tl	190.864	-0.064 nm	0.03
V	292.402	+0.070 nm	0.009
Zn	213.856x2	+0.035 nm	0.002

(1) Wavelength x 2 indicates wavelength is read in second order.

(2) The IDLs were estimated from three times the standard deviation of 10 replicate measurements of the calibration blank. The calculated IDL was rounded upward and reported to a single digit.

TABLE 2. TOTAL RECOVERABLE METHOD DETECTION LIMITS (MDL)

Analyte	MDLs Aqueous, mg/L[1]	MDLs Solids, mg/Kg[2]
Ag	0.002	0.3
Al	0.02	3
As	0.008	2
B	0.003	-
Ba	0.001	0.2
Be	0.0003	0.1
Ca	0.01	2
Cd	0.001	0.2
Co	0.002	0.4
Cr	0.004	0.8
Cu	0.003	0.5
Fe	0.03*	6
Hg	0.007	2
K	0.3	60
Li	0.001	2
Mg	0.02	3
Mn	0.001	0.2
Mo	0.004	1
Na	0.03	20
Ni	0.005	1
P	0.06	12
Pb	0.01	2
Sb	0.008	2
Se	0.02	5
SiO_2	0.02	-
Sn	0.007	2
Sr	0.0003	0.1
Tl	0.02	3
V	0.003	1
Zn	0.002	0.3

(1) MDL concentrations are computed for original matrix with allowance for 2x sample preconcentration during preparation. Samples were processed in Teflon and diluted in 50-mL plastic centrifuge tubes.

(2) Based on aqueous solution determination.

\- Boron not reported because of glassware contamination. Silica not determined in solid samples.

* Elevated value due to fume hood contamination.

TABLE 3. LISTING OF POTENTIAL INTERELEMENT SPECTRAL INTERFERENCE

Analyte	Wavelength, nm	Interfering Element	Correction Factor
Ag	328.068	Fe	-0.0002
		Mn	0.0001
		V	-0.0001
Al	308.215	Co	-0.0020
		Mo	0.0107
		V	0.0082
As	193.696	Al	0.0067
		Be	-0.0007
		Co	0.0004
		Fe	0.0003
		Mo	-0.0012
		Ni	0.0001
		V	0.0120
B	249.678x2	None	--
Ba	493.409	None	--
Be	313.042	V	0.0041
Ca	315.887	Co	0.0016
		Cr	-0.0002
		Mo	0.0033
Cd	226.502	Co	-0.0012
		Fe	-0.00004
		Ni	0.0004
		Sn	-0.0003
Co	228.616	Ba	0.0009
		Cr	0.0002
		Mo	0.0001
		Ni	0.0003
Cr	205.552x2	Be	0.0014
		Cu	-0.0004
		Fe	-0.0009
		Mo	0.0009
		Ni	0.0006
Cu	324.754	Mo	0.0005
Fe	259.940	None	--
Hg	194.227x2	Mo	0.0004
		V	0.0030
K	766.491	None	--
Li	670.784	None	--
Mg	279.079	Mn	-0.0030
		Mo	-0.0029
Mn	257.610	Fe	-0.0004
Mo	203.844	Al	-0.0002
		Fe	-0.0001
		Mn	-0.0041

TABLE 3. (Continued)

Analyte	Wavelength, nm	Interfering Element	Correction Factor
Na	588.995	None	--
Ni	231.604x2	Co	0.0011
		Mo	-0.0016
		Tl	0.0005
P	214.914x2	Al	-0.0019
		Ca	-0.0014
		Cu	0.0121
		Mo	0.0060
Pb	220.353	Al	0.0013
		Co	-0.0332
		Cr	-0.0021
		Cu	0.0005
		Fe	-0.0002
		Ni	-0.0012
		V	-0.0016
Sb	206.833	Co	-0.0030
		Cr	0.0114
		Fe	0.00008
		Mo	0.0082
		Ni	-0.0092
		Sn	0.0024
Se	196.090	As	-0.0025
		Co	-0.0047
		Fe	0.0004
		Mo	-0.0152
		V	-0.0022

Analyte	Wavelength, nm	INTERFERING Element	CORRECTION FACTOR
Si	251.611	None	--
Sn	189.980x2	Fe	0.0004
		Mn	0.0004
		Mo	-0.0114
		Sb	-0.0009
		Si	0.0002
Sr	421.552	None	--
Tl	190.864	Co	0.0054
		Fe	0.0008
		Mn	0.0021
		Mo	0.0057
		P	0.00008
		V	0.0038
V	292.402	Cr	0.0006
		Fe	0.0005
		Mo	0.0026
Zn	213.856x2	Cu	0.0011
		Fe	.0001
		Ni	0.0034

TABLE 4. INDUCTIVELY COUPLED PLASMA INSTRUMENT OPERATING CONDITIONS

Incident rf power	1100 watts
Reflected rf power	< 5 watts
Viewing height above work coil	15 mm
Injector tube orifice i.d.	1 mm
Argon supply	liquid argon
Argon pressure	40 psi
Coolant argon flow rate	19 L/min
Aerosol carrier argon flow rate	620 mL/min
Auxiliary (plasma) argon flow rate	300 mL/min
Sample uptake rate controlled to	1.2 mL/min

PB-CU ICP-AES EMISSION PROFILE

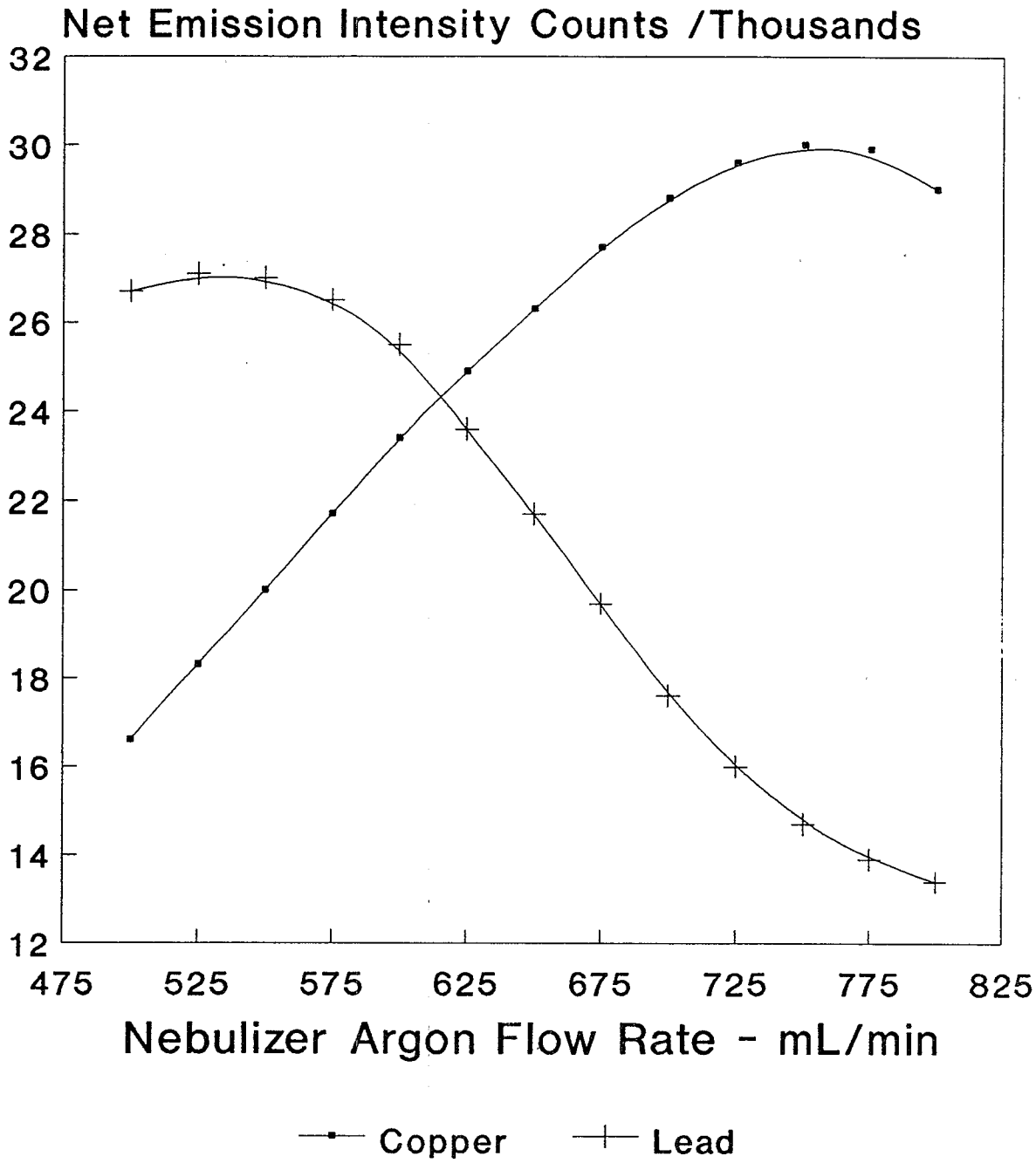

FIGURE 1

TABLE 5. PRECISION AND RECOVERY DATA IN AQUEOUS MATRICES

TAP WATER

ANALYTE	SAMPLE CONC mg/L	LOW SPIKE mg/L	AVERAGE RECOVERY R(%)	S(R)	RPD	HIGH SPIKE mg/L	AVERAGE RECOVERY R(%)	S(R)	RPD
Ag	<0.002	0.05	95	0.7	2.1	0.2	96	0.0	0.0
Al	0.185	0.05	98	8.8	1.7	0.2	105	3.0	3.1
As	<0.008	0.05	108	1.4	3.7	0.2	101	0.7	2.0
B	0.023	0.1	98	0.2	0.0	0.4	98	0.2	0.5
Ba	0.042	0.05	102	1.6	2.2	0.2	98	0.4	0.8
Be	<0.0003	0.01	100	0.0	0.0	0.1	99	0.0	0.0
Ca	35.2	5.0	101	8.8	1.7	20.0	103	2.0	0.9
Cd	<0.001	0.01	105	3.5	9.5	0.1	98	0.0	0.0
Co	<0.002	0.02	100	0.0	0.0	0.2	99	0.5	1.5
Cr	<0.004	0.01	110	0.0	0.0	0.1	102	0.0	0.0
Cu	<0.003	0.02	103	1.8	4.9	0.2	101	1.2	3.5
Fe	0.008	0.1	106	1.0	1.8	0.4	105	0.3	0.5
Hg	<0.007	0.05	103	0.7	1.9	0.2	100	0.4	1.0
K	1.98	5.0	109	1.4	2.3	20.0	107	0.7	1.7
Li	0.006	0.02	103	6.9	3.8	0.2	110	1.9	4.4
Mg	8.08	5.0	104	2.2	1.5	20.0	100	0.7	1.1
Mn	<0.001	0.01	100	0.0	0.0	0.1	99	0.0	0.0
Mo	<0.004	0.02	95	3.5	10.5	0.2	108	0.5	1.4
Na	10.3	5.0	99	3.0	2.0	20.0	106	1.0	1.6
Ni	<0.005	0.02	108	1.8	4.7	0.2	104	1.1	2.9
P	0.045	0.1	102	13.1	9.4	0.4	104	3.2	1.3
Pb	<0.01	0.05	95	0.7	2.1	0.2	100	0.2	0.5
Sb	<0.008	0.05	99	0.7	2.0	0.2	102	0.7	2.0
Se	<0.02	0.1	87	1.1	3.5	0.4	99	0.8	2.3
SiO_2	6.5	5.0	104	3.3	3.4	20.0	96	1.1	2.3
Sn	<0.007	0.05	103	2.1	5.8	0.2	101	1.8	5.0
Sr	0.181	0.1	102	3.3	2.1	0.4	105	0.8	1.0
Tl	<0.02	0.1	101	3.9	10.9	0.4	101	0.1	0.3
V	<0.003	0.05	101	0.7	2.0	0.2	99	0.2	0.5
Zn	0.005	0.05	101	3.7	9.0	0.2	98	0.9	2.5

S(R) Standard deviation of percent recovery.
RPD Relative percent difference between duplicate spike determinations.
< Sample concentration below established method detection limit.
* Spike concentration <10% of sample background concentration.

TABLE 5. PRECISION AND RECOVERY DATA IN AQUEOUS MATRICES (Cont'd.)

POND WATER

ANALYTE	SAMPLE CONC mg/L	LOW SPIKE mg/L	AVERAGE RECOVERY R(%)	S(R)	RPD	HIGH SPIKE mg/L	AVERAGE RECOVERY R(%)	S(R)	RPD
Ag	<0.002	0.05	92	0.0	0.0	0.2	94	0.0	0.0
Al	0.819	0.2	88	10.0	5.0	0.8	100	2.9	3.7
As	<0.008	0.05	102	0.0	0.0	0.2	98	1.4	4.1
B	0.034	0.1	111	8.9	6.9	0.4	103	2.0	0.0
Ba	0.029	0.05	96	0.9	0.0	0.2	97	0.3	0.5
Be	<0.0003	0.01	95	0.4	1.1	0.1	95	0.0	0.0
Ca	53.9	5	*	*	0.7	20.0	100	2.0	1.5
Cd	<0.001	0.01	107	0.0	0.0	0.1	97	0.0	0.0
Co	<0.002	0.02	100	2.7	7.5	0.2	97	0.7	2.1
Cr	<0.004	0.01	105	3.5	9.5	0.1	103	1.1	2.9
Cu	0.003	0.02	98	2.1	4.4	0.2	100	0.5	1.5
Fe	0.875	0.2	95	8.9	2.8	0.8	97	3.2	3.6
Hg	<0.007	0.05	97	3.5	10.3	0.2	98	0.0	0.0
K	2.48	5	106	0.3	0.1	20.0	103	0.2	0.4
Li	<0.001	0.02	110	0.0	0.0	0.2	106	0.2	0.5
Mg	10.8	5	102	0.5	0.0	20.0	96	0.7	1.3
Mn	0.632	0.01	*	*	0.2	0.1	97	2.3	0.3
Mo	<0.004	0.02	105	3.5	9.5	0.2	103	0.4	1.0
Na	17.8	5	103	1.3	0.4	20.0	94	0.3	0.0
Ni	<0.005	0.02	96	5.6	9.1	0.2	100	0.7	1.5
P	0.196	0.1	91	14.7	0.3	0.4	108	3.9	1.3
Pb	<0.01	0.05	96	2.6	7.8	0.2	100	0.7	2.0
Sb	<0.008	0.05	102	2.8	7.8	0.2	104	0.4	1.0
Se	<0.02	0.1	104	2.1	5.8	0.4	103	1.6	4.4
SiO_2	7.83	5	151	1.6	1.3	20.0	117	0.4	0.6
Sn	<0.007	0.05	98	0.0	0.0	0.2	99	1.1	3.0
Sr	0.129	0.1	105	0.4	0.0	0.4	99	0.1	0.2
Tl	<0.02	0.1	103	1.1	2.9	0.4	97	1.3	3.9
V	0.003	0.05	94	0.4	0.0	0.2	98	0.1	0.0
Zn	0.006	0.05	97	1.6	1.8	0.2	94	0.4	0.0

S(R) Standard deviation of percent recovery.
RPD Relative percent difference between duplicate spike determinations.
< Sample concentration below established method detection limit.
* Spike concentration <10% of sample background concentration.

TABLE 5. PRECISION AND RECOVERY DATA IN AQUEOUS MATRICES (Cont'd.)

WELL WATER

ANALYTE	SAMPLE CONC mg/L	LOW SPIKE mg/L	AVERAGE RECOVERY R(%)	S(R)	RPD	HIGH SPIKE mg/L	AVERAGE RECOVERY R(%)	S(R)	RPD
Ag	<0.002	0.05	97	0.7	2.1	0.2	96	0.2	0.5
Al	0.036	0.05	107	7.6	10.1	0.2	101	1.1	0.8
As	<0.008	0.05	107	0.7	1.9	0.2	104	0.4	1.0
B	0.063	0.1	97	0.6	0.7	0.4	98	0.8	2.1
Ba	0.102	0.05	102	3.0	0.0	0.2	99	0.9	1.0
Be	<0.0003	0.01	100	0.0	0.0	0.1	100	0.0	0.0
Ca	93.8	5.0	*	*	2.1	20.0	100	4.1	0.1
Cd	0.002	0.01	90	0.0	0.0	0.1	96	0.0	0.0
Co	<0.002	0.02	94	0.4	1.1	0.2	94	0.4	1.1
Cr	<0.004	0.01	100	7.1	20.0	0.1	100	0.4	1.0
Cu	0.005	0.02	100	1.1	0.4	0.2	96	0.5	1.5
Fe	0.042	0.1	99	2.3	1.4	0.4	97	1.4	3.3
Hg	<0.007	0.05	94	2.8	8.5	0.2	93	1.2	3.8
K	6.21	5.0	96	3.4	3.6	20.0	101	1.2	2.3
Li	0.001	0.02	100	7.6	9.5	0.2	104	1.0	1.9
Mg	24.5	5.0	95	5.6	0.3	20.0	93	1.6	1.2
Mn	2.76	0.01	*	*	0.4	0.1	*	*	0.7
Mo	<0.004	0.02	108	1.8	4.7	0.2	101	0.2	0.5
Na	35.0	5.0	101	11.4	0.8	20.0	100	3.1	1.5
Ni	<0.005	0.02	112	1.8	4.4	0.2	96	0.2	0.5
P	0.197	0.1	95	12.7	1.9	0.4	98	3.4	0.9
Pb	<0.01	0.05	87	4.9	16.1	0.2	95	0.2	0.5
Sb	<0.008	0.05	98	2.8	8.2	0.2	99	1.4	4.0
Se	<0.02	0.1	102	0.4	1.0	0.4	94	1.1	3.4
SiO_2	13.1	5.0	93	4.8	2.8	20.0	99	0.8	0.0
Sn	<0.007	0.05	98	2.8	8.2	0.2	94	0.2	0.5
Sr	0.274	0.1	94	5.7	2.7	0.4	95	1.7	2.2
Tl	<0.02	0.1	92	0.4	1.1	0.4	95	1.1	3.2
V	<0.003	0.05	98	0.0	0.0	0.2	99	0.4	1.0
Zn	0.538	0.05	*	*	0.7	0.2	99	2.5	1.1

S(R) Standard deviation of percent recovery.
RPD Relative percent difference between duplicate spike determinations.
< Sample concentration below established method detection limit.
* Spike concentration <10% of sample background concentration.

TABLE 5. PRECISION AND RECOVERY DATA IN AQUEOUS MATRICES (Cont'd.)

SEWAGE TREATMENT PRIMARY EFFLUENT

ANALYTE	SAMPLE CONC mg/L	LOW SPIKE mg/L	AVERAGE RECOVERY R(%)	S(R)	RPD	HIGH SPIKE mg/L	AVERAGE RECOVERY R(%)	S(R)	RPD
Ag	0.009	0.05	92	1.5	3.6	0.2	95	0.1	0.0
Al	1.19	0.05	*	*	0.9	0.2	113	12.4	2.1
As	<0.008	0.05	99	2.1	6.1	0.2	93	2.1	6.5
B	0.226	0.1	217	16.3	9.5	0.4	119	13.1	20.9
Ba	0.189	0.05	90	6.8	1.7	0.2	99	1.6	0.5
Be	<0.0003	0.01	94	0.4	1.1	0.1	100	0.4	1.0
Ca	87.9	5.0	*	*	0.6	20.0	101	3.7	0.0
Cd	0.009	0.01	89	2.6	2.3	0.1	97	0.4	1.0
Co	0.016	0.02	95	3.1	0.0	0.2	93	0.4	0.5
Cr	0.128	0.01	*	*	1.5	0.1	97	2.4	2.7
Cu	0.174	0.02	98	33.1	4.7	0.2	98	3.0	1.4
Fe	1.28	0.1	*	*	2.8	0.4	111	7.0	0.6
Hg	<0.007	0.05	102	1.4	3.9	0.2	98	0.5	1.5
K	10.6	5.0	104	2.8	1.3	20.0	101	0.6	0.0
Li	0.011	0.02	103	8.5	3.2	0.2	105	0.8	0.5
Mg	22.7	5.0	100	4.4	0.0	20.0	92	1.1	0.2
Mn	0.199	0.01	*	*	2.0	0.1	104	1.9	0.3
Mo	0.125	0.02	110	21.2	6.8	0.2	102	1.3	0.9
Na	236	5.0	*	*	0.0	20.0	*	*	0.4
Ni	0.087	0.02	122	10.7	4.5	0.2	98	0.8	1.1
P	4.71	0.1	*	*	2.6	0.4	*	*	1.4
Pb	0.015	0.05	91	3.5	5.0	0.2	96	1.3	2.9
Sb	<0.008	0.05	97	0.7	2.1	0.2	103	1.1	2.9
Se	<0.02	0.1	108	3.9	10.0	0.4	101	2.6	7.2
SiO_2	16.7	5.0	124	4.0	0.9	20.0	108	1.1	0.8
Sn	0.016	0.05	90	3.8	0.0	0.2	95	1.0	0.0
Sr	0.515	0.1	103	6.4	0.5	0.4	96	1.6	0.2
Tl	<0.02	0.1	105	0.4	1.0	0.4	95	0.0	0.0
V	0.003	0.05	93	0.9	2.0	0.2	97	0.2	0.5
Zn	0.160	0.05	98	3.3	1.9	0.2	101	1.0	1.4

S(R) Standard deviation of percent recovery.
RPD Relative percent difference between duplicate spike determinations.
< Sample concentration below established method detection limit.
* Spike concentration <10% of sample background concentration.

TABLE 5. PRECISION AND RECOVERY DATA IN AQUEOUS MATRICES (Cont'd.)

INDUSTRIAL EFFLUENT

ANALYTE	SAMPLE CONC mg/L	LOW SPIKE mg/L	AVERAGE RECOVERY R(%)	S(R)	RPD	HIGH SPIKE mg/L	AVERAGE RECOVERY R(%)	S(R)	RPD
Ag	<0.003	0.05	88	0.0	0.0	0.2	84	0.9	3.0
Al	0.054	0.05	88	11.7	12.2	0.2	90	3.9	8.1
As	<0.02	0.05	82	2.8	9.8	0.2	88	0.5	1.7
B	0.17	0.1	162	17.6	13.9	0.4	92	4.7	9.3
Ba	0.083	0.05	86	8.2	1.6	0.2	85	2.3	2.4
Be	<0.0006	0.01	94	0.4	1.1	0.1	82	1.4	4.9
Ca	500	5.0	*	*	2.8	20.0	*	*	2.3
Cd	0.008	0.01	85	4.7	6.1	0.1	82	1.4	4.4
Co	<0.004	0.02	93	1.8	5.4	0.2	83	0.4	1.2
Cr	0.165	0.01	*	*	4.5	0.1	106	6.6	5.6
Cu	0.095	0.02	93	23.3	0.9	0.2	95	2.7	2.8
Fe	0.315	0.1	88	16.4	1.0	0.4	99	6.5	8.0
Hg	<0.01	0.05	87	0.7	2.3	0.2	86	0.4	1.2
K	2.87	5.0	101	3.4	2.4	20.0	100	0.8	0.4
Li	0.069	0.02	103	24.7	5.6	0.2	104	2.5	2.2
Mg	6.84	5.0	87	3.1	0.0	20.0	87	0.9	1.2
Mn	0.141	0.01	*	*	1.2	0.1	89	6.6	4.8
Mo	1.27	0.02	*	*	0.0	0.2	100	15.0	2.7
Na	1500	5.0	*	*	2.7	20.0	*	*	2.0
Ni	0.014	0.02	98	4.4	3.0	0.2	87	0.5	1.1
P	0.326	0.1	105	16.0	4.7	0.4	97	3.9	1.4
Pb	0.251	0.05	80	19.9	1.4	0.2	88	5.0	0.9
Sb	2.81	0.05	*	*	0.4	0.2	*	*	2.0
Se	0.021	0.1	106	2.6	3.2	0.4	105	1.9	4.6
SiO_2	6.83	5.0	99	6.8	1.7	20.0	100	2.2	3.0
Sn	<0.01	0.05	87	0.7	2.3	0.2	86	0.4	1.2
Sr	6.54	0.1	*	*	2.0	0.4	*	*	2.7
Tl	<0.03	0.1	87	1.8	5.8	0.4	84	1.1	3.6
V	<0.005	0.05	90	1.4	4.4	0.2	84	1.1	3.6
Zn	0.024	0.05	89	6.0	4.4	0.2	91	3.5	8.9

S(R) Standard deviation of percent recovery.
RPD Relative percent difference between duplicate spike determinations.
< Sample concentration below established method detection limit.
* Spike concentration <10% of sample background concentration.

TABLE 6. PRECISION AND RECOVERY DATA IN SOLID MATRICES

EPA HAZARDOUS SOIL #884

ANALYTE	SAMPLE CONC mg/kg	LOW+ SPIKE mg/kg	AVERAGE RECOVERY R(%)	S(R)	RPD	HIGH+ SPIKE mg/kg	AVERAGE RECOVERY R(%)	S(R)	RPD
Ag	1.1	20	98	0.7	1.0	100	96	0.2	0.6
Al	5080	20	*	*	7.2	100	*	*	5.4
As	5.7	20	95	5.4	10.6	100	96	1.4	3.6
B	20.4	100	93	2.7	5.3	400	100	2.1	5.5
Ba	111	20	98	71.4	22.2	100	97	10.0	1.0
Be	0.66	20	97	0.7	2.0	100	99	0.1	0.2
Ca	85200	-	-	-	-	-	-	-	-
Cd	2	20	93	0.7	1.0	100	94	0.2	0.4
Co	5.5	20	96	3.5	7.7	100	93	0.8	2.1
Cr	79.7	20	87	28.8	16.5	100	104	1.3	1.1
Cu	113	20	110	16.2	4.4	100	104	4.0	4.2
Fe	16500	-	-	-	-	-	-	-	-
Hg	<1.4	10	92	2.5	7.7	40	98	0.0	0.0
K	621	500	121	1.3	0.0	2000	107	0.9	1.8
Li	6.7	10	113	3.5	4.4	40	106	0.6	0.6
Mg	24400	500	*	*	8.4	2000	*	*	10.1
Mn	343	20	*	*	8.5	100	95	11.0	1.6
Mo	5.3	20	88	5.3	13.2	100	91	1.4	4.1
Na	195	500	102	2.2	2.4	2000	100	1.5	3.7
Ni	15.6	20	100	1.8	0.0	100	94	1.5	3.6
P	595	500	106	13.4	8.0	2000	103	3.2	2.7
Pb	145	20	88	51.8	17.9	100	108	15.6	17.4
Sb	6.1	20	83	3.9	7.5	100	81	1.9	5.9
Se	<5	20	79	14.7	52.4	100	99	0.7	2.1
Sn	16.6	20	91	34.6	5.8	80	112	8.7	2.8
Sr	102	100	84	9.6	10.8	400	94	2.5	4.6
Tl	<4	20	92	4.8	14.6	100	91	1.5	4.6
V	16.7	20	104	4.2	5.4	100	99	0.8	1.7
Zn	131	20	103	31.2	7.3	100	104	7.2	6.4

S(R) Standard deviation of percent recovery.
RPD Relative percent difference between duplicate spike determinations.
< Sample concentration below established method detection limit.
* Spike concentration <10% of sample background concentration.
- Not spiked.
+ Equivalent

TABLE 6. PRECISION AND RECOVERY DATA IN SOLID MATRICES (Cont.)

EPA ELECTROPLATING SLUDGE #286

ANALYTE	SAMPLE CONC mg/kg	LOW+ SPIKE mg/kg	AVERAGE RECOVERY R(%)	S(R)	RPD	HIGH+ SPIKE mg/kg	AVERAGE RECOVERY R(%)	S(R)	RPD
Ag	6	20	96	0.2	0.4	100	93.2	0.1	0.4
Al	4980	20	*	*	4.4	100	*	*	5.6
As	32	20	94	1.3	0.8	100	97	0.7	1.6
B	210	100	113	2.0	1.6	400	98	1.9	3.5
Ba	39.8	20	0	6.8	0.3	100	0	1.6	5.7
Be	0.32	20	96	0.2	0.5	100	100.68	0.7	2.0
Ca	48500	-	-	-	-	-	-	-	-
Cd	108	20	98	2.5	0.8	100	96	0.5	0.5
Co	5.9	20	93	2.9	5.7	100	93	0.6	1.5
Cr	7580	20	*	*	0.7	100	*	*	1.3
Cu	806	20	*	*	1.5	100	94	8.3	0.7
Fe	31100	-	-	-	-	-	-	-	-
Hg	6.1	10	90	2.5	4.0	40	97	1.7	4.3
K	2390	500	75	8.3	4.0	2000	94	2.9	3.8
Li	9.1	10	101	2.8	0.5	40	106	1.6	3.1
Mg	1950	500	110	2.0	0.8	2000	108	2.3	3.2
Mn	262	20	*	*	1.8	100	91	1.2	0.9
Mo	13.2	20	92	2.1	2.9	100	92	0.3	0.0
Na	73400	500	*	*	1.7	2000	*	*	1.4
Ni	456	20	*	*	0.4	100	88	2.7	0.9
P	9610	500	*	*	2.9	2000	114	7.4	3.4
Pb	1420	20	*	*	2.1	100	*	*	1.3
Sb	<2	20	76	0.9	3.3	100	75	2.8	10.7
Se	6.3	20	86	9.0	16.6	100	103	1.6	2.7
Sn	24.0	20	87	4.0	2.7	100	92	0.7	0.0
Sr	145	100	90	8.1	8.1	400	93	2.4	4.6
Tl	16	20	89	4.6	5.3	100	92	0.8	0.9
V	21.7	20	95	1.2	1.0	100	96	0.4	0.9
Zn	12500	20	*	*	0.8	100	*	*	0.8

S(R) Standard deviation of percent recovery.
RPD Relative percent difference between duplicate spike determinations.
< Sample concentration below established method detection limit.
* Spike concentration <10% of sample background concentration.
- Not spiked.
+ Equivalent

TABLE 6. PRECISION AND RECOVERY DATA IN SOLID MATRICES (Cont.)

NBS 1645 RIVER SEDIMENT

ANALYTE	SAMPLE CONC mg/kg	LOW+ SPIKE mg/kg	AVERAGE RECOVERY R(%)	S(R)	RPD	HIGH+ SPIKE mg/kg	AVERAGE RECOVERY R(%)	S(R)	RPD
Ag	1.6	20	92	0.4	1.0	100	96	0.3	0.9
Al	5160	20	*	*	8.4	100	*	*	2.4
As	62.8	20	89	14.4	9.7	100	97	2.9	5.0
B	31.9	100	116	7.1	13.5	400	95	0.6	1.5
Ba	54.8	20	95	6.1	2.8	100	98	1.2	1.3
Be	0.72	20	101	0.4	1.0	100	103	1.4	3.9
Ca	28000	-	-	-	-	-	-	-	-
Cd	9.7	20	100	1.1	0.0	100	101	0.7	1.8
Co	9.4	20	98	3.8	4.8	100	98	0.9	1.8
Cr	28500	20	*	*	0.4	100	*	*	0.7
Cu	109	20	115	8.5	0.0	100	102	1.8	1.0
Fe	84800	-	-	-	-	-	-	-	-
Hg	3.1	10	99	4.3	7.7	40	96	0.7	1.0
K	452	500	98	4.1	2.0	2000	106	1.4	2.3
Li	3.7	10	101	2.0	0.7	40	108	1.3	3.0
Mg	6360	500	*	*	1.8	2000	93	2.7	1.0
Mn	728	20	*	*	3.5	100	97	12.4	2.2
Mo	17.9	20	97	12.5	18.5	100	98	0.6	0.0
Na	1020	500	92	2.6	0.0	2000	97	1.1	1.7
Ni	36.2	20	94	5.9	4.0	100	100	1.1	1.5
P	553	500	102	1.4	0.9	2000	100	0.8	1.6
Pb	707	20	*	*	0.8	100	103	5.9	0.4
Sb	22.8	20	86	2.3	0.0	100	88	0.6	0.9
Se	6.7	20	103	14.3	27.1	100	98	3.1	7.6
Sn	309	20	*	*	1.0	100	101	7.9	2.7
Sr	782	100	91	12.3	3.0	400	96	3.3	2.6
Tl	<4	20	90	0.0	0.0	100	95	1.3	4.0
V	20.1	20	89	5.4	5.8	100	98	0.7	0.0
Zn	1640	20	*	*	1.8	100	*	*	1.1

S(R) Standard deviation of percent recovery.
RPD Relative percent difference between duplicate spike determinations.
< Sample concentration below established method detection limit.
* Spike concentration <10% of sample background concentration.
- Not spiked.
+ Equivalent

TABLE 7. DRINKING WATER 4X PRECONCENTRATION PRECISION AND RECOVERY DATA (1)

ANALYTE	SAMPLE CONC mg/L	LOW SPIKE mg/L	AVERAGE RECOVERY R(%)	RSD(%)	HIGH SPIKE mg/L	AVERAGE RECOVERY R(%)	RSD(%)
Ag	<0.001	0.025	95	0.5	0.12	95	4.6
Al	0.102	0.05	95	1.6	0.2	104	5.2
As	<0.004	0.02	101	10.9	0.08	98	3.6
B	0.022	0.02	100	1.2	0.08	96	5.1
Ba	0.037	0.5	101	0.7	2.0	98	4.0
Be	<0.0002	0.001	100	0.0	0.004	100	5.0
Ca	32.6	-	-	1.9	-	-	-
Cd	<0.0006	0.005	100	2.4	0.02	95	3.8
Cr	<0.002	0.05	99	1.0	0.2	96	3.9
Cu	<0.001	0.5	99	0.7	2.0	96	3.3
Fe	<0.02	0.1	114	5.4	0.4	102	5.0
Hg	<0.003	0.01	84	7.1	0.04	94	6.6
K	2.09	-	-	2.2	-	-	-
Mg	7.49	-	-	2.0	-	-	-
Mn	0.002	0.005	100	1.4	0.02	110	4.8
Mo	<0.003	0.01	103	5.3	0.04	102	4.6
Na	8.21	-	-	1.9	-	-	-
Ni	<0.002	0.01	112	1.9	0.04	103	5.6
Pb	<0.005	0.01	105	11.4	0.04	108	4.4
Sb	<0.004	0.01	106	7.5	0.04	99	9.1
Se	<0.01	0.05	107	8.8	0.2	96	5.6
Sr	0.160	0.1	94	0.3	0.4	102	4.7
Tl	<0.008	0.02	98	8.6	0.08	100	4.4
V	<0.002	0.01	100	3.1	0.04	100	5.7
Zn	0.003	0.02	101	1.8	0.08	95	5.0

METHOD 200.8

DETERMINATION OF TRACE ELEMENTS IN WATERS AND WASTES BY INDUCTIVELY COUPLED PLASMA - MASS SPECTROMETRY

Stephen E. Long
Technology Applications, Inc.

and

Theodore D. Martin
Inorganic Chemistry Branch
Chemistry Research Division

Revision 4.4
April 1991

ENVIRONMENTAL MONITORING SYSTEMS LABORATORY
OFFICE OF RESEARCH AND DEVELOPMENT
U.S. ENVIRONMENTAL PROTECTION AGENCY
CINCINNATI, OHIO 45268

METHOD 200.8

DETERMINATION OF TRACE ELEMENTS IN WATERS AND WASTES BY INDUCTIVELY COUPLED PLASMA - MASS SPECTROMETRY

1. SCOPE AND APPLICATION

1.1 This method provides procedures for determination of dissolved elements in ground waters, surface waters and drinking water. It may also be used for determination of total recoverable element concentrations in these waters as well as wastewaters, sludges and solid waste samples.

1.2 Dissolved elements are determined after suitable filtration and acid preservation. Acid digestion procedures are required prior to determination of total recoverable elements. In order to reduce potential interferences, dissolved solids should not exceed 0.2% (w/v) (Sect. 4.1.4).

1.3 This method is applicable to the following elements:

Element		Chemical Abstract Services Registry Numbers (CASRN)
Aluminum	(Al)	7429-90-5
Antimony	(Sb)	7440-36-0
Arsenic	(As)	7440-38-2
Barium	(Ba)	7440-39-3
Beryllium	(Be)	7440-41-7
Cadmium	(Cd)	7440-43-9
Chromium	(Cr)	7440-47-3
Cobalt	(Co)	7440-48-4
Copper	(Cu)	7440-50-8
Lead	(Pb)	7439-92-1
Manganese	(Mn)	7439-96-5
Molybdenum	(Mo)	7439-98-7
Nickel	(Ni)	7440-02-0
Selenium	(Se)	7782-49-2
Silver	(Ag)	7440-22-4
Thallium	(Tl)	7440-28-0
Thorium	(Th)	7440-29-1
Uranium	(U)	7440-61-1
Vanadium	(V)	7440-62-2
Zinc	(Zn)	7440-66-6

Estimated instrument detection limits (IDLs) for these elements are listed in Table 1. These are intended as a guide to instrumental limits typical of a system optimized for multielement determinations and employing commercial instrumentation and pneumatic nebulization sample introduction. However, actual method detection limits (MDLs)

and linear working ranges will be dependent on the sample matrix, instrumentation and selected operating conditions.

1.4 This method is suitable for the determination of silver in aqueous samples containing concentrations up to 0.1 mg/L. For the analysis of wastewater samples containing higher concentrations of silver, succeeding smaller volume, well mixed sample aliquots must be prepared until the analysis solution contains < 0.1 mg/L silver.

1.5 This method should be used by analysts experienced in the use of inductively coupled plasma mass spectrometry (ICP-MS), the interpretation of spectral and matrix interferences and procedures for their correction. A minimum of six months experience with commercial instrumentation is recommended.

2. SUMMARY OF METHOD

2.1 The method describes the multi-element determination of trace elements by ICP-MS[1-3]. Sample material in solution is introduced by pneumatic nebulization into a radiofrequency plasma where energy transfer processes cause desolvation, atomization and ionization. The ions are extracted from the plasma through a differentially pumped vacuum interface and separated on the basis of their mass-to-charge ratio by a quadrupole mass spectrometer having a minimum resolution capability of 1 amu peak width at 5% peak height. The ions transmitted through the quadrupole are registered by a continuous dynode electron multiplier or Faraday detector and the ion information processed by a data handling system. Interferences relating to the technique (Sect. 4) must be recognized and corrected for. Such corrections must include compensation for isobaric elemental interferences and interferences from polyatomic ions derived from the plasma gas, reagents or sample matrix. Instrumental drift as well as suppressions or enhancements of instrument response caused by the sample matrix must be corrected for by the use of internal standardization.

3. DEFINITIONS

3.1 DISSOLVED - Material that will pass through a 0.45 μm membrane filter assembly, prior to sample acidification.

3.2 TOTAL RECOVERABLE - The concentration of analyte determined on an unfiltered sample following treatment with hot dilute mineral acid.

3.3 INSTRUMENT DETECTION LIMIT (IDL) - The concentration equivalent of the analyte signal, which is equal to three times the standard deviation of the blank signal at the selected analytical mass(es).

3.4 METHOD DETECTION LIMIT (MDL) - The minimum concentration of an analyte that can be identified, measured and reported with 99% confidence that the analyte concentration is greater than zero.

3.5 LINEAR DYNAMIC RANGE (LDR) - The concentration range over which the analytical working curve remains linear.

3.6 LABORATORY REAGENT BLANK (LRB) (preparation blank) - An aliquot of reagent water that is treated exactly as a sample including exposure to all labware, equipment, solvents, reagents, and internal standards that are used with other samples. The LRB is used to determine if method analytes or other interferences are present in the laboratory environment, the reagents or apparatus.

3.7 CALIBRATION BLANK - A volume of ASTM type I water acidified with the same acid matrix as is present in the calibration standards.

3.8 INTERNAL STANDARD - Pure analyte(s) added to a solution in known amount(s) and used to measure the relative responses of other method analytes that are components of the same solution. The internal standard must be an analyte that is not a sample component.

3.9 STOCK STANDARD SOLUTION - A concentrated solution containing one or more analytes prepared in the laboratory using assayed reference compounds or purchased from a reputable commercial source.

3.10 CALIBRATION STANDARD (CAL) - A solution prepared from the stock standard solution(s) which is used to calibrate the instrument response with respect to analyte concentration.

3.11 TUNING SOLUTION - A solution which is used to determine acceptable instrument performance prior to calibration and sample analyses.

3.12 LABORATORY FORTIFIED BLANK (LFB) - An aliquot of reagent water to which known quantities of the method analytes are added in the laboratory. The LFB is analyzed exactly like a sample, and its purpose is to determine whether method performance is within accepted control limits.

3.13 LABORATORY FORTIFIED SAMPLE MATRIX (LFM) - An aliquot of an environmental sample to which known quantities of the method analytes are added in the laboratory. The LFM is analyzed exactly like a sample, and its purpose is to determine whether the sample matrix contributes bias to the analytical results. The background concentrations of the analytes in the sample matrix must be determined in a separate aliquot and the measured values in the LFM corrected for the concentrations found.

3.14 QUALITY CONTROL SAMPLE (QCS) - A solution containing known concentrations of method analytes which is used to fortify an aliquot of LRB matrix. The QCS is obtained from a source external to the laboratory and is used to check laboratory performance.

4. INTERFERENCES

4.1 Several interference sources may cause inaccuracies in the determination of trace elements by ICP-MS. These are:

4.1.1 Isobaric elemental interferences - Are caused by isotopes of different elements which form singly or doubly charged ions of the same nominal mass-to-charge ratio and which cannot be resolved by the mass spectrometer in use. All elements determined by this method have, at a minimum, one isotope free of isobaric elemental interference. Of the analytical isotopes recommended for use with this method (Table 4), only molybdenum-98 (ruthenium) and selenium-82 (krypton) have isobaric elemental interferences. If alternative analytical isotopes having higher natural abundance are selected in order to achieve greater sensitivity, an isobaric interference may occur. All data obtained under such conditions must be corrected by measuring the signal from another isotope of the interfering element and subtracting the appropriate signal ratio from the isotope of interest. A record of this correction process should be included with the report of the data. It should be noted that such corrections will only be as accurate as the accuracy of the isotope ratio used in the elemental equation for data calculations. Relevant isotope ratios and instrument bias factors should be established prior to the application of any corrections.

4.1.2 Abundance sensitivity - Is a property defining the degree to which the wings of a mass peak contribute to adjacent masses. The abundance sensitivity is affected by ion energy and quadrupole operating pressure. Wing overlap interferences may result when a small ion peak is being measured adjacent to a large one. The potential for these interferences should be recognized and the spectrometer resolution adjusted to minimize them.

4.1.3 Isobaric polyatomic ion interferences - Are caused by ions consisting of more than one atom which have the same nominal mass-to-charge ratio as the isotope of interest, and which cannot be resolved by the mass spectrometer in use. These ions are commonly formed in the plasma or interface system from support gases or sample components. Most of the common interferences have been identified[3], and these are listed in Table 2 together with the method elements affected. Such interferences must be recognized, and when they cannot be avoided by the selection of alternative analytical isotopes, appropriate corrections must be made to the data. Equations for the correction of data should be established at the time of the analytical run sequence as the polyatomic ion interferences will be highly dependent on the sample matrix and chosen instrument conditions.

4.1.4 Physical interferences - Are associated with the physical processes which govern the transport of sample into the plasma, sample conversion processes in the plasma, and the transmission of ions through the plasma-mass spectrometer interface. These interferences may result in differences between instrument responses for the sample and the calibration standards. Physical interferences may occur in the transfer of solution to the nebulizer (e.g., viscosity effects), at the point of aerosol formation and transport to the plasma (e.g., surface tension), or during excitation and ionization processes within the plasma itself. High levels of dissolved solids in the sample may contribute deposits of material on the extraction and/or skimmer cones reducing the effective diameter of the orifices and therefore ion transmission. Dissolved solids levels not exceeding 0.2% (w/v) have been recommended[3] to reduce such effects. Internal standardization may be effectively used to compensate for many physical interference effects[4]. Internal standards ideally should have similar analytical behavior to the elements being determined.

4.1.5 Memory interferences - Result when isotopes of elements in a previous sample contribute to the signals measured in a new sample. Memory effects can result from sample deposition on the sampler and skimmer cones, and from the buildup of sample material in the plasma torch and spray chamber. The site where these effects occur is dependent on the element and can be minimized by flushing the system with a rinse blank between samples (Sect. 7.6.3). The possibility of memory interferences should be recognized within an analytical run and suitable rinse times should be used to reduce them. The rinse times necessary for a particular element should be estimated prior to analysis. This may be achieved by aspirating a standard containing elements corresponding to ten times the upper end of the linear range for a normal sample analysis period, followed by analysis of the rinse blank at designated intervals. The length of time required to reduce analyte signals to within a factor of ten of the method detection limit, should be noted. Memory interferences may also be assessed within an analytical run by using a minimum of three replicate integrations for data acquisition. If the integrated signal values drop consecutively, the analyst should be alerted to the possibility of a memory effect, and should examine the analyte concentration in the previous sample to identify if this was high. If a memory interference is suspected, the sample should be reanalyzed after a long rinse period.

5. SAFETY

5.1 The toxicity or carcinogenicity of reagents used in this method have not been fully established. Each chemical should be regarded as a

potential health hazard and exposure to these compounds should be as low as reasonably achievable. Each laboratory is responsible for maintaining a current awareness file of OSHA regulations regarding the safe handling of the chemicals specified in this method[5,6]. A reference file of material data handling sheets should also be available to all personnel involved in the chemical analysis.

5.2 Analytical plasma sources emit radiofrequency radiation in addition to intense UV radiation. Suitable precautions should be taken to protect personnel from such hazards.

6. APPARATUS AND EQUIPMENT

6.1 INDUCTIVELY COUPLED PLASMA - MASS SPECTROMETER

6.1.1 Instrument capable of scanning the mass range 5-250 amu with a minimum resolution capability of 1 amu peak width at 5% peak height. Instrument may be fitted with a conventional or extended dynamic range detection system.

6.1.2 Argon gas supply (high-purity grade, 99.99%).

6.1.3 A variable-speed peristaltic pump is required for solution delivery to the nebulizer.

6.1.4 A mass-flow controller on the nebulizer gas supply is required. A water-cooled spray chamber may be of benefit in reducing some types of interferences (e.g., from polyatomic oxide species).

6.1.5 Operating conditions - Because of the diversity of instrument hardware, no detailed instrument operating conditions are provided. The analyst is advised to follow the recommended operating conditions provided by the manufacturer. It is the responsibility of the analyst to verify that the instrument configuration and operating conditions satisfy the analytical requirements and to maintain quality control data verifying instrument performance and analytical results. Instrument operating conditions which were used to generate precision and recovery data for this method (Sect. 13) are included in Table 6.

6.1.6 If an electron multiplier detector is being used, precautions should be taken, where necessary, to prevent exposure to high ion flux. Otherwise changes in instrument response or damage to the multiplier may result. Samples having high concentrations of elements beyond the linear range of the instrument and with isotopes falling within scanning windows should be diluted prior to analysis.

6.2 LABWARE - For the determination of trace levels of elements, contamination and loss are of prime consideration. Potential

contamination sources include improperly cleaned laboratory apparatus and general contamination within the laboratory environment from dust, etc. A clean laboratory work area, designated for trace element sample handling must be used. Sample containers can introduce positive and negative errors in the determination of trace elements by (1) contributing contaminants through surface desorption or leaching, (2) depleting element concentrations through adsorption processes. All reuseable labware (glass, quartz, polyethylene, Teflon, etc.) including the sample container should be cleaned prior to use. Labware may be soaked overnight and thoroughly washed with laboratory-grade detergent and water, rinsed with water, and soaked for four hours in a mixture of dilute nitric and hydrochloric acid (1+2+9), followed by rinsing with water, ASTM type I water and oven drying.

NOTE: Chromic acid must not be used for cleaning glassware.

6.2.1 Glassware - Volumetric flasks, graduated cylinders, funnels and centrifuge tubes.

6.2.2 Assorted calibrated pipettes.

6.2.3 Conical Phillips beakers, 250-mL with 50-mm watch glasses. Griffin beakers, 250-mL with 75-mm watch glasses.

6.2.4 Storage bottles - Narrow mouth bottles, Teflon FEP (fluorinated ethylene propylene) with Tefzel ETFE (ethylene tetrafluorethylene) screw closure, 125-mL and 250-mL capacities.

6.3 SAMPLE PROCESSING EQUIPMENT

6.3.1 Air Displacement Pipetter - Digital pipet system capable of delivering volumes from 10 to 2500 μL with an assortment of high quality disposable pipet tips.

6.3.2 Balance - Analytical, capable of accurately weighing to 0.1 mg.

6.3.3 Hot Plate - (Corning PC100 or equivalent).

6.3.4 Centrifuge - Steel cabinet with guard bowl, electric timer and brake.

6.3.5 Drying Oven - Gravity convection oven with thermostatic control capable of maintaining 105°C ± 5°C.

7. REAGENTS AND CONSUMABLE MATERIALS

7.1 Reagents may contain elemental impurities that might affect the integrity of analytical data. Owing to the high sensitivity of ICP-

MS, high-purity reagents should be used whenever possible. All acids used for this method must be of ultra high-purity grade. Suitable acids are available from a number of manufacturers or may be prepared by sub-boiling distillation. Nitric acid is preferred for ICP-MS in order to minimize polyatomic ion interferences. Several polyatomic ion interferences result when hydrochloric acid is used (Table 2), however, it should be noted that hydrochloric acid is required to maintain stability in solutions containing antimony and silver. When hydrochloric acid is used, corrections for the chloride polyatomic ion interferences must be applied to all data.

7.1.1 Nitric acid, concentrated (sp.gr. 1.41).

7.1.2 Nitric acid (1+1) - Add 500 mL conc. nitric acid to 400 mL of ASTM type I water and dilute to 1 L.

7.1.3 Nitric acid (1+9) - Add 100 mL conc. nitric acid to 400 mL of ASTM type I water and dilute to 1 L.

7.1.4 Hydrochloric acid, concentrated (sp.gr. 1.19).

7.1.5 Hydrochloric acid (1+1) - Add 500 mL conc. hydrochloric acid to 400 mL of ASTM type I water and dilute to 1 L.

7.1.6 Hydrochloric acid (1+4) - Add 200 mL conc. hydrochloric acid to 400 mL of ASTM type I water and dilute to 1 L.

7.1.7 Ammonium hydroxide, concentrated (sp.gr. 0.902).

7.1.8 Tartaric acid (CASRN 87-69-4).

7.2 WATER - For all sample preparation and dilutions, ASTM type I water (ASTM D1193) is required. Suitable water may be prepared by passing distilled water through a mixed bed of anion and cation exchange resins.

7.3 STANDARD STOCK SOLUTIONS - May be purchased from a reputable commercial source or prepared from ultra high-purity grade chemicals or metals (99.99 - 99.999% pure). All salts should be dried for 1 h at 105°C, unless otherwise specified. (CAUTION: Many metal salts are extremely toxic if inhaled or swallowed. Wash hands thoroughly after handling). Stock solutions should be stored in Teflon bottles. The following procedures may be used for preparing standard stock solutions:

NOTE: Some metals, particularly those which form surface oxides require cleaning prior to being weighed. This may be achieved by pickling the surface of the metal in acid. An amount in excess of the desired weight should be pickled repeatedly, rinsed with water, dried and weighed until the desired weight is achieved.

7.3.1 Aluminum solution, stock 1 mL = 1000 μg Al: Pickle aluminum metal in warm (1+1) HCl to an exact weight of 0.100 g. Dissolve in 10 mL conc. HCl and 2 mL conc. nitric acid, heating to effect solution. Continue heating until volume is reduced to 4 mL. Cool and add 4 mL ASTM type I water. Heat until the volume is reduced to 2 mL. Cool and dilute to 100 mL with ASTM type I water.

7.3.2 Antimony solution, stock 1 mL = 1000 μg Sb: Dissolve 0.100 g antimony powder in 2 mL (1+1) nitric acid and 0.5 mL conc. hydrochloric acid, heating to effect solution. Cool, add 20 mL ASTM type I water and 0.15 g tartaric acid. Warm the solution to dissolve the white precipitate. Cool and dilute to 100 mL with ASTM type I water.

7.3.3 Arsenic solution, stock 1 mL = 1000 μg As: Dissolve 0.1320 g As_2O_3 in a mixture of 50 mL ASTM type I water and 1 mL conc. ammonium hydroxide. Heat gently to dissolve. Cool and acidify the solution with 2 mL conc. nitric acid. Dilute to 100 mL with ASTM type I water.

7.3.4 Barium solution, stock 1 mL = 1000 μg Ba: Dissolve 0.1437 g $BaCO_3$ in a solution mixture of 10 mL ASTM type I water and 2 mL conc. nitric acid. Heat and stir to effect solution and degassing. Dilute to 100 mL with ASTM type I water.

7.3.5 Beryllium solution, stock 1 mL = 1000 μg Be: Dissolve 1.965 g $BeSO_4.4H_2O$ (DO NOT DRY) in 50 mL ASTM Type I water. Add 1 mL conc. nitric acid. Dilute to 100 mL with ASTM type I water.

7.3.6 Bismuth solution, stock 1 mL = 1000 μg Bi: Dissolve 0.1115 g Bi_2O_3 in 5 mL conc. nitric acid. Heat to effect solution. Cool and dilute to 100 mL with ASTM type I water.

7.3.7 Cadmium solution, stock 1 mL = 1000 μg Cd: Pickle cadmium metal in (1+9) nitric acid to an exact weight of 0.100 g. Dissolve in 5 mL (1+1) nitric acid, heating to effect solution. Cool and dilute to 100 mL with ASTM type I water.

7.3.8 Chromium solution, stock 1 mL = 1000 μg Cr: Dissolve 0.1923 g CrO_3 in a solution mixture of 10 mL ASTM type I water and 1 mL conc. nitric acid. Dilute to 100 mL with ASTM type I water.

7.3.9 Cobalt solution, stock 1 mL = 1000 μg Co: Pickle cobalt metal in (1+9) nitric acid to an exact weight of 0.100 g. Dissolve in 5 mL (1+1) nitric acid, heating to effect solution. Cool and dilute to 100 mL with ASTM type I water.

7.3.10 Copper solution, stock 1 mL = 1000 μg Cu: Pickle copper metal in (1+9) nitric acid to an exact weight of 0.100 g. Dissolve in 5 mL (1+1) nitric acid, heating to effect solution. Cool and dilute to 100 mL with ASTM type I water.

7.3.11 Indium solution, stock 1 mL = 1000 μg In: Pickle indium metal in (1+1) nitric acid to an exact weight of 0.100 g. Dissolve in 10 mL (1+1) nitric acid, heating to effect solution. Cool and dilute to 100 mL with ASTM type I water.

7.3.12 Lead solution, stock 1 mL = 1000 μg Pb: Dissolve 0.1599 g $PbNO_3$ in 5 mL (1+1) nitric acid. Dilute to 100 mL with ASTM type I water.

7.3.13 Magnesium solution, stock 1 mL = 1000 μg Mg: Dissolve 0.1658 g MgO in 10 mL (1+1) nitric acid, heating to effect solution. Cool and dilute to 100 mL with ASTM type I water.

7.3.14 Manganese solution, stock 1 mL = 1000 μg Mn: Pickle manganese flake in (1+9) nitric acid to an exact weight of 0.100 g. Dissolve in 5 mL (1+1) nitric acid, heating to effect solution. Cool and dilute to 100 mL with ASTM type I water.

7.3.15 Molybdenum solution, stock 1 mL = 1000 μg Mo: Dissolve 0.1500 g MoO_3 in a solution mixture of 10 mL ASTM type I water and 1 mL conc. ammonium hydroxide., heating to effect solution. Cool and dilute to 100 mL with ASTM type I water.

7.3.16 Nickel solution, stock 1 mL = 1000 μg Ni: Dissolve 0.100 g nickel powder in 5 mL conc. nitric acid, heating to effect solution. Cool and dilute to 100 mL with ASTM type I water.

7.3.17 Scandium solution, stock 1 mL = 1000 μg Sc: Dissolve 0.1534 g Sc_2O_3 in 5 mL (1+1) nitric acid, heating to effect solution. Cool and dilute to 100 mL with ASTM type I water.

7.3.18 Selenium solution, stock 1 mL = 1000 μg Se: Dissolve 0.1405 g SeO_2 in 20 mL ASTM type I water. Dilute to 100 mL with ASTM type I water.

7.3.19 Silver solution, stock 1 mL = 1000 μg Ag: Dissolve 0.100 g silver metal in 5 mL (1+1) nitric acid, heating to effect solution. Cool and dilute to 100 mL with ASTM type I water. Store in dark container.

7.3.20 Terbium solution, stock 1 mL = 1000 μg Tb: Dissolve 0.1176 g Tb_4O_7 in 5 mL conc. nitric acid, heating to effect solution. Cool and dilute to 100 mL with ASTM type I water.

7.3.21 Thallium solution, stock 1 mL = 1000 μg Tl: Dissolve 0.1303 g $TlNO_3$ in a solution mixture of 10 mL ASTM type I water and 1 mL conc. nitric acid. Dilute to 100 mL with ASTM type I water.

7.3.22 Thorium solution, stock 1 mL = 1000 μg Th: Dissolve 0.2380 g $Th(NO_3)_4.4H_2O$ (DO NOT DRY) in 20 mL ASTM type I water. Dilute to 100 mL with ASTM type I water.

7.3.23 Uranium solution, stock 1 mL = 1000 μg U: Dissolve 0.2110 g $UO_2(NO_3)_2.6H_2O$ (DO NOT DRY) in 20 mL ASTM type I water and dilute to 100 mL with ASTM type I water.

7.3.24 Vanadium solution, stock 1 mL = 1000 μg V: Pickle vanadium metal in (1+9) nitric acid to an exact weight of 0.100 g. Dissolve in 5 mL (1+1) nitric acid, heating to effect solution. Cool and dilute to 100 mL with ASTM type I water.

7.3.25 Yttrium solution, stock 1 mL = 1000 μg Y: Dissolve 0.1270 g Y_2O_3 in 5 mL (1+1) nitric acid, heating to effect solution. Cool and dilute to 100 mL with ASTM type I water.

7.3.26 Zinc solution, stock 1 mL = 1000 μg Zn: Pickle zinc metal in (1+9) nitric acid to an exact weight of 0.100 g. Dissolve in 5 mL (1+1) nitric acid, heating to effect solution. Cool and dilute to 100 mL with ASTM type I water.

7.4 MULTIELEMENT STOCK STANDARD SOLUTIONS - Care must be taken in the preparation of multielement stock standards that the elements are compatible and stable. Originating element stocks should be checked for the presence of impurities which might influence the accuracy of the standard. Freshly prepared standards should be transferred to acid cleaned, not previously used FEP fluorocarbon bottles for storage and monitored periodically for stability. The following combinations of elements are suggested:

Standard Solution A		Standard Solution B
Aluminum	Manganese	Barium
Antimony	Molybdenum	Silver
Arsenic	Nickel	
Beryllium	Selenium	
Cadmium	Thallium	
Chromium	Thorium	
Cobalt	Uranium	
Copper	Vanadium	
Lead	Zinc	

Multielement stock standard solutions A and B (1 mL = 10 μg) may be prepared by diluting 1 mL of each single element stock in the

combination list to 100 mL with ASTM type I water containing 1% (v/v) nitric acid.

7.4.1 Preparation of calibration standards - fresh multielement calibration standards should be prepared every two weeks or as needed. Dilute each of the stock multielement standard solutions A and B to levels appropriate to the operating range of the instrument using ASTM type I water containing 1% (v/v) nitric acid. The element concentrations in the standards should be sufficiently high to produce good measurement precision and to accurately define the slope of the response curve. Concentrations of 200 μg/L are suggested. If the direct addition procedure is being used (Method A, Sect. 9.2), add internal standards (Sect. 7.5) to the calibration standards and store in Teflon bottles. Calibration standards should be verified initially using a quality control sample (Sect. 7.8).

7.5 INTERNAL STANDARDS STOCK SOLUTION, 1 mL = 100 μg. Dilute 10 mL of scandium, yttrium, indium, terbium and bismuth stock standards (Sect. 7.3) to 100 mL with ASTM type I water, and store in a Teflon bottle. Use this solution concentrate for addition to blanks, calibration standards and samples, or dilute by an appropriate amount using 1% (v/v) nitric acid, if the internal standards are being added by peristaltic pump (Method B, Sect. 9.2).

7.6 BLANKS - Three types of blanks are required for this method. A calibration blank is used to establish the analytical calibration curve, the laboratory reagent blank is used to assess possible contamination from the sample preparation procedure and to assess spectral background and the rinse blank is used to flush the instrument between samples in order to reduce memory interferences.

7.6.1 Calibration blank - Consists of 1% (v/v) nitric acid in ASTM type I water. If the direct addition procedure (Method A, Sect. 9.2), is being used add internal standards.

7.6.2 Laboratory reagent blank (LRB) - Must contain all the reagents in the same volumes as used in processing the samples. The LRB must be carried through the entire sample digestion and preparation scheme. If the direct addition procedure (Method A, Sect. 9.2) is being used, add internal standards to the solution after preparation is complete.

7.6.3 Rinse blank - Consists of 2% (v/v) nitric acid in ASTM type I water.

7.7 TUNING SOLUTION - This solution is used for instrument tuning and mass calibration prior to analysis. The solution is prepared by mixing beryllium, magnesium, cobalt, indium and lead stock solutions (Sect. 7.3) in 1% (v/v) nitric acid to produce a concentration of

100 μg/L of each element. Internal standards are not added to this solution.

7.8 QUALITY CONTROL SAMPLE (QCS) - The QCS should be obtained from a source outside the laboratory. Dilute an appropriate aliquot of analytes (concentrations not to exceed 1000 μg/L), in 1% (v/v) nitric acid. If the direct addition procedure (Method A, Sect. 9.2) is being used, add internal standards after dilution, mix and store in a Teflon bottle.

7.9 LABORATORY FORTIFIED BLANK (LFB) - To an aliquot of LRB, add aliquots from multielement stock standards A and B (Sect. 7.4) to produce a final concentration of 100 μg/L for each analyte. The LFB must be carried through the entire sample digestion and preparation scheme. If the direct addition procedure (Method A, Sect. 9.2) is being used, add internal standards to this solution after preparation has been completed.

8. SAMPLE COLLECTION, PRESERVATION AND STORAGE

8.1 Prior to sample collection, consideration should be given to the type of data required so that appropriate preservation and pretreatment steps can be taken. Filtration, acid preservation, etc., should be performed at the time of sample collection or as soon thereafter as practically possible.

8.2 For the determination of dissolved elements, the sample should be filtered through a 0.45-μm membrane filter. Use a portion of the sample to rinse the filter assembly, discard and then collect the required volume of filtrate. Acidify the filtrate with (1+1) nitric acid immediately following filtration to pH < 2.

8.3 For the determination of total recoverable elements in aqueous samples, acidify with (1+1) nitric acid at the time of collection to pH < 2 (normally, 3 mL of (1+1) nitric acid per liter of sample is sufficient for most ambient and drinking water samples). The sample should not be filtered prior to analysis.

NOTE: Samples that cannot be acid preserved at the time of collection because of sampling limitations or transport restrictions, should be acidified with nitric acid to pH < 2 upon receipt in the laboratory. Following acidification, the sample should be held for 16 h before withdrawing an aliquot for sample processing.

8.4 Solid samples usually require no preservation prior to analysis other than storage at 4°C.

9. CALIBRATION AND STANDARDIZATION

9.1 CALIBRATION - Demonstration and documentation of acceptable initial calibration is required before any samples are analyzed and is required periodically throughout sample analysis as dictated by results of continuing calibration checks. After initial calibration is successful, a calibration check is required at the beginning and end of each period during which analyses are performed, and at requisite intervals.

9.1.1 Initiate proper operating configuration of instrument and data system. Allow a period of not less than 30 min for the instrument to warm up. During this process conduct mass calibration and resolution checks using the tuning solution. Resolution at low mass is indicated by magnesium isotopes 24,25,26. Resolution at high mass is indicated by lead isotopes 206,207,208. For good performance adjust spectrometer resolution to produce a peak width of approximately 0.75 amu at 5% peak height. Adjust mass calibration if it has shifted by more than 0.1 amu from unit mass.

9.1.2 Instrument stability must be demonstrated by running the tuning solution (Sect. 7.7) a minimum of five times with resulting relative standard deviations of absolute signals for all analytes of less than 5%.

9.1.3 Prior to initial calibration, set up proper instrument software routines for quantitative analysis. The instrument must be calibrated for the analytes to be determined using the calibration blank (Sect. 7.6.1) and calibration standards A and B (Sect. 7.4.1) prepared at one or more concentration levels. A minimum of three replicate integrations are required for data acquisition. Use the average of the integrations for instrument calibration and data reporting.

9.1.4 The rinse blank should be used to flush the system between solution changes for blanks, standards and samples. Allow sufficient rinse time to remove traces of the previous sample or a minimum of 1 min. Solutions should be aspirated for 30 sec prior to the acquisition of data to allow equilibrium to be established.

9.2 INTERNAL STANDARDIZATION - Internal standardization must be used in all analyses to correct for instrument drift and physical interferences. A list of acceptable internal standards is provided in Table 3. For full mass range scans, a minimum of three internal standards must be used. Procedures described in this method for general application, detail the use of five internal standards; scandium, yttrium, indium, terbium and bismuth. These were used to generate the precision and recovery data attached to this method. Internal standards must be present in all samples, standards and

blanks at identical levels. This may be achieved by directly adding an aliquot of the internal standards to the CAL standard, blank or sample solution (Method A, Sect. 9.2), or alternatively by mixing with the solution prior to nebulization using a second channel of the peristaltic pump and a mixing coil (Method B, Sect. 9.2). The concentration of the internal standard should be sufficiently high that good precision is obtained in the measurement of the isotope used for data correction and to minimize the possibility of correction errors if the internal standard is naturally present in the sample. A concentration of 200 μg/L of each internal standard is recommended. Internal standards should be added to blanks, samples and standards in a like manner, so that dilution effects resulting from the addition may be disregarded.

9.3 INSTRUMENT PERFORMANCE - Check the performance of the instrument and verify the calibration using data gathered from analyses of calibration blanks, calibration standards and the quality control sample (QCS).

9.3.1 After the calibration has been established, it must be initially verified for all analytes by analyzing the QCS (Sect. 7.8). If measurements exceed ± 10% of the established QCS value, the analysis should be terminated, the source of the problem identified and corrected, the instrument recalibrated and the calibration reverified before continuing analyses.

9.3.2 To verify that the instrument is properly calibrated on a continuing basis, run the calibration blank and calibration standards as surrogate samples after every ten analyses. The results of the analyses of the standards will indicate whether the calibration remains valid. If the indicated concentration of any analyte deviates from the true concentration by more than 10%, reanalyze the standard. If the analyte is again outside the 10% limit, the instrument must be recalibrated and the previous ten samples reanalyzed. The instrument responses from the calibration check may be used for recalibration purposes. If the sample matrix is responsible for the calibration drift, it is recommended that the previous ten samples are reanalyzed in groups of five between calibration checks to prevent a similar drift situation from occurring.

10. QUALITY CONTROL

10.1 Each laboratory using this method is required to operate a formal quality control (QC) program. The minimum requirements of this program consist of an initial demonstration of laboratory capability, and the analysis of laboratory reagent blanks, fortified blanks and samples as a continuing check on performance. The

laboratory is required to maintain performance records that define the quality of the data thus generated.

10.2 INITIAL DEMONSTRATION OF PERFORMANCE

10.2.1 The initial demonstration of performance is used to characterize instrument performance (method detection limits and linear calibration ranges) for analyses conducted by this method.

10.2.2 Method detection limits (MDL) should be established for all analytes, using reagent water (blank) fortified at a concentration of two to five times the estimated detection limit[7]. To determine MDL values, take seven replicate aliquots of the fortified reagent water and process through the entire analytical method. Perform all calculations defined in the method and report the concentration values in the appropriate units. Calculate the MDL as follows:

$$MDL = (t) \times (S)$$

where, t = Student's t value for a 99% confidence level and a standard deviation estimate with n-1 degrees of freedom [t = 3.14 for seven replicates].

S = standard deviation of the replicate analyses.

MDLs should be determined every six months or whenever a significant change in background or instrument response is expected (e.g., detector change).

10.2.3 Linear calibration ranges - Linear calibration ranges are primarily detector limited. The upper limit of the linear calibration range should be established for each analyte by determining the signal responses from a minimum of three different concentration standards, one of which is close to the upper limit of the linear range. Care should be taken to avoid potential damage to the detector during this process. The linear calibration range which may be used for the analysis of samples should be judged by the analyst from the resulting data. Linear calibration ranges should be determined every six months or whenever a significant change in instrument response is expected (e.g., detector change).

10.3 ASSESSING LABORATORY PERFORMANCE - REAGENT AND FORTIFIED BLANKS

10.3.1 Laboratory reagent blank (LRB) - The laboratory must analyze at least one LRB (Sect. 7.6.2) with each set of samples. LRB data are used to assess contamination from the laboratory environment and to characterize spectral background from the reagents used in sample processing. If an analyte value in the reagent blank exceeds its determined MDL, then laboratory

or reagent contamination should be suspected. Any determined source of contamination should be corrected and the samples reanalyzed.

10.3.2 Laboratory fortified blank (LFB) - The laboratory must analyze at least one LFB (Sect. 7.9) with each batch of samples. Calculate accuracy as percent recovery (Sect. 10.4.2) If the recovery of any analyte falls outside the control limits (Sect. 10.3.3), that analyte is judged out of control, and the source of the problem should be identified and resolved before continuing analyses.

10.3.3 Until sufficient LFB data become available (usually a minimum of 20 to 30 analyses), the laboratory should assess laboratory performance against recovery limits of 85-115%. When sufficient internal performance data becomes available, develop control limits from the percent mean recovery (x) and the standard deviation (S) of the mean recovery. These data are used to establish upper and lower control limits as follows:

UPPER CONTROL LIMIT = x + 3S
LOWER CONTROL LIMIT = x - 3S

After each five to ten new recovery measurements, new control limits should be calculated using only the most recent twenty to 30 data points.

10.4 ASSESSING ANALYTE RECOVERY - LABORATORY FORTIFIED SAMPLE MATRIX

10.4.1 The laboratory must add a known amount of analyte to a minimum of 10% of the routine samples or one sample per sample set, whichever is greater. Ideally for water samples, the analyte concentration should be the same as that used in the LFB (Sect. 10.3.2). For solid samples, the concentration added should be 50 mg/kg equivalent (100 μg/L in the analysis solution). Over time, samples from all routine sample sources should be fortified.

10.4.2 Calculate the percent recovery for each analyte, corrected for background concentrations measured in the unfortified sample, and compare these values to the control limits established in Sect. 10.3.3 for the analyses of LFBs. Recovery calculations are not required if the concentration of the analyte added is less than 10% of the sample background concentration. Percent recovery may be calculated in units appropriate to the matrix, using the following equation:

$$R = \frac{C_s - C}{s} \times 100$$

where, R = percent recovery
C_s = fortified sample concentration
C = sample background concentration
s = concentration equivalent of fortifier added to sample.

10.4.3 If recovery of any analyte falls outside the designated range and laboratory performance for that analyte is shown to be in control (Sect. 10.3), the recovery problem encountered with the fortified sample is judged to be matrix related, not system related. The result for that analyte in the unfortified sample must be labelled "suspect/matrix" to inform the data user that the results are suspect due to matrix effects.

10.5 INTERNAL STANDARDS RESPONSES - The analyst is expected to monitor the responses from the internal standards throughout the sample set being analyzed. Ratios of the internal standards responses against each other should also be monitored routinely. This information may be used to detect potential problems caused by mass dependent drift, errors incurred in adding the internal standards or increases in the concentrations of individual internal standards caused by background contributions from the sample. The absolute response of any one internal standard should not deviate more than 60-125% of the original response in the calibration blank. If deviations greater than this are observed, use the following test procedure:

10.5.1 Flush the instrument with the rinse blank and monitor the responses in the calibration blank. If the responses of the internal standards are now within the limit, take a fresh aliquot of the sample, dilute by a further factor of two, add the internal standards and reanalyze.

10.5.2 If test (Sect. 10.5.1) is not satisfied, or if it is a blank or calibration standard that is out of limits, terminate the analysis, and determine the cause of the drift. Possible causes of drift may be a partially blocked sampling cone or a change in the tuning condition of the instrument.

11. PROCEDURE

11.1 SAMPLE PREPARATION - DISSOLVED ELEMENTS

11.1.1 For determination of dissolved elements in drinking water, ground and surface waters, take a 100 mL aliquot of the filtered acid preserved sample, and add 1 mL of concentrated nitric acid. If the direct addition procedure (Method A) is being used, add internal standards and mix. The sample is now ready for analysis. Allowance for sample dilution should be made in the calculations.

NOTE: If a precipitate is formed during acidification, transport or storage, the sample aliquot must be treated using the procedure in Sect. 11.2.1 prior to analysis.

11.2 SAMPLE PREPARATION - TOTAL RECOVERABLE ELEMENTS

11.2.1 For determination of total recoverable elements in water or wastewater, take a 100 mL aliquot from a well mixed, acid preserved sample containing not more than 0.25% (w/v) total solids and transfer to a 250-mL Griffin beaker (if total solids are greater than 0.25% reduce the size of the aliquot by a proportionate amount). Add 1 mL of conc. nitric acid and 0.5 mL conc. hydrochloric acid. Heat on a hot plate at 85°C until the volume has been reduced to approximately 20 mL, ensuring that the sample does not boil. A spare beaker containing 20 mL of water can be used as a guage. (**NOTE:** Adjust the temperature control of the hot plate such that an uncovered beaker containing 50 mL of water located in the center of the hot plate can be maintained at a temperature no higher than 85°C. Evaporation time for 100 mL of sample at 85°C is approximately 2 h with the rate of evaporation increasing rapidly as the sample volume approaches 20 mL). Cover the beaker with a watch glass and reflux for 30 min. Slight boiling may occur but vigorous boiling should be avoided. Allow to cool and quantitatively transfer to either a 50-mL volumetric flask or 50-mL class A stoppered graduated cylinder. Dilute to volume with ASTM type I water and mix. Centrifuge the sample or allow to stand overnight to separate insoluble material. Prior to analysis, pipette 20 mL into a 50-mL volumetric flask, dilute to volume with ASTM type I water and mix. If the direct addition procedure (Method A, Sect. 9.2) is being used, add internal standards and mix. The sample is now ready for analysis. Because the stability of diluted samples cannot be fully characterized, all analyses should be performed as soon as possible after the completed preparation.

11.2.2 For determination of total recoverable elements in solid samples (sludge, soils, and sediments), mix the sample thoroughly to achieve homogeneity and weigh accurately a 1.0 ± 0.01 g portion of the sample. Transfer to a 250-mL Phillips beaker. Add 4 mL (1+1) nitric acid and 10 mL (1+4) HCl. Cover with a watch glass, and reflux the sample on a hot plate for 30 min. Very slight boiling may occur, however, vigorous boiling must be avoided to prevent the loss of the $HCl-H_2O$ azeotrope. (**NOTE:** Adjust the temperature control of the hot plate such that an uncovered Griffin beaker containing 50 mL of water located in the center of the hot plate can be maintained at a temperature of approximately but no higher than 85°C). Allow the sample to cool, and quantitatively transfer to a 100-mL volumetric flask. Dilute

to volume with ASTM type I water and mix. Centrifuge the sample or allow to stand overnight to separate insoluble material. Prior to analysis, pipette 10 mL into a 50-mL volumetric flask and dilute to volume with ASTM type I water. If the direct addition procedure (Method A, Sect. 9.2) is being used, add internal standards and mix. The sample is now ready for analysis. Because the effects of various matrices on the stability of diluted samples cannot be characterized, all analyses should be performed as soon as possible after the completed preparation.

NOTE: Determine the percent solids in the sample for use in calculations and for reporting data on a dry weight basis.

11.3 For every new or unusual matrix, it is highly recommended that a semi-quantitative analysis be carried out to screen for high element concentrations. Information gained from this may be used to prevent potential damage to the detector during sample analysis and to identify elements which may be higher than the linear range. Matrix screening may be carried out by using intelligent software, if available, or by diluting the sample by a factor of 500 and analyzing in a semi-quantitative mode. The sample should also be screened for background levels of all elements chosen for use as internal standards in order to prevent bias in the calculation of the analytical data.

11.4 Initiate instrument operating configuration. Tune and calibrate the instrument for the analytes of interest (Sect. 9).

11.5 Establish instrument software run procedures for quantitative analysis. For all sample analyses, a minimum of three replicate integrations are required for data acquisition. Discard any integrations which are considered to be statistical outliers and use the average of the integrations for data reporting.

11.6 All masses which might affect data quality must be monitored during the analytical run. As a minimum, those masses prescribed in Table 4 must be monitored in the same scan as is used for the collection of the data. This information should be used to correct the data for identified interferences.

11.7 The rinse blank should be used to flush the system between samples. Allow sufficient time to remove traces of the previous sample or a minimum of one minute. Samples should be aspirated for 30 sec prior to the collection of data.

11.8 Samples having concentrations higher than the established linear dynamic range should be diluted into range and reanalyzed. The sample should first be analyzed for the trace elements in the sample, protecting the detector from the high concentration elements, if necessary, by the selection of appropriate scanning windows. The sample should then be diluted for the determination of

the remaining elements. Alternatively, the dynamic range may be adjusted by selecting an alternative isotope of lower natural abundance, provided quality control data for that isotope have been established. The dynamic range must not be adjusted by altering instrument conditions to an uncharacterized state.

12. CALCULATIONS

12.1 Elemental equations recommended for sample data calculations are listed in Table 5. Sample data should be reported in units of μg/L for aqueous samples or mg/kg dry weight for solid samples. Do not report element concentrations below the determined MDL.

12.2 For data values less than ten, two significant figures should be used for reporting element concentrations. For data values greater than or equal to ten, three significant figures should be used.

12.3 Reported values should be calibration blank subtracted. For aqueous samples prepared by total recoverable procedure (Sect. 11.2.1), multiply solution concentrations by the dilution factor 1.25. For solid samples prepared by total recoverable procedure (Sect. 11.2.2), multiply solution concentrations (μg/L in the analysis solution) by the dilution factor 0.5. If additional dilutions were made to any samples, the appropriate factor should be applied to the calculated sample concentrations.

12.4 Data values should be corrected for instrument drift or sample matrix induced interferences by the application of internal standardization. Corrections for characterized spectral interferences should be applied to the data. Chloride interference corrections should be made on all samples, regardless of the addition of hydrochloric acid, as the chloride ion is a common constituent of environmental samples.

12.5 If an element has more than one monitored isotope, examination of the concentration calculated for each isotope, or the isotope ratios, will provide useful information for the analyst in detecting a possible spectral interference. Consideration should therefore be given to both primary and secondary isotopes in the evaluation of the element concentration. In some cases, secondary isotopes may be less sensitive or more prone to interferences than the primary recommended isotopes, therefore differences between the results do not necessarily indicate a problem with data calculated for the primary isotopes.

12.6 The QC data obtained during the analyses provide an indication of the quality of the sample data and should be provided with the sample results.

13. PRECISION AND ACCURACY

13.1 Instrument operating conditions used for single laboratory testing of the method are summarized in Table 6. Total recoverable MDLs determined using the procedure described in Sect. 10.2.2, are listed in Table 7.

13.2 Data obtained from single laboratory testing of the method are summarized in Table 8 for five water samples representing drinking water, surface water, ground water and waste effluent. Samples were prepared using the procedure described in Sect. 11.2.1. For each matrix, five replicates were analyzed and the average of the replicates used for determining the sample background concentration for each element. Two further pairs of duplicates were fortified at different concentration levels. For each method element, the sample background concentration, mean percent recovery, the standard deviation of the percent recovery and the relative percent difference between the duplicate fortified samples are listed in Table 8.

13.3 Data obtained from single laboratory testing of the method are summarized in Table 9 for three solid samples consisting of SRM 1645 River Sediment, EPA Hazardous Soil and EPA Electroplating Sludge. Samples were prepared using the procedure described in Sect. 11.2.2. For each method element, the sample background concentration, mean percent recovery, the standard deviation of the percent recovery and the relative percent difference between the duplicate fortified samples were determined as for Sect. 13.2.

14. REFERENCES

1. A. L. Gray and A. R. Date, *Analyst* 108 1033 (1983).

2. R. S. Houk et al. *Anal Chem.* 52 2283 (1980).

3. R. S. Houk, *Anal. Chem.* 58 97A (1986).

4. J. J. Thompson and R. S. Houk, *Appl. Spec.* 41 801 (1987).

5. "OSHA Safety and Health Standards, General Industry," (29 CFR 1910), Occupational Safety and Health Administration, OSHA 2206, revised January 1976.

6. "Proposed OSHA Safety and Health Standards, Laboratories," Occupational Safety and Health Administration, Federal Register, July 24, 1986.

7. Code of Federal Regulations 40, Ch. 1, Pt. 136 Appendix B.

TABLE 1: ESTIMATED INSTRUMENT DETECTION LIMITS

ELEMENT	RECOMMENDED ANALYTICAL MASS	ESTIMATED IDL (μg/L)
Aluminum	27	0.05
Antimony	121	0.08
Arsenic	75	0.9
Barium	137	0.5
Beryllium	9	0.1
Cadmium	111	0.1
Chromium	52	0.07
Cobalt	59	0.03
Copper	63	0.03
Lead	206.207,208	0.08
Manganese	55	0.1
Molybdenum	98	0.1
Nickel	60	0.2
Selenium	82	5
Silver	107	0.05
Thallium	205	0.09
Thorium	232	0.03
Uranium	238	0.02
Vanadium	51	0.02
Zinc	66	0.2

Instrument detection limits (3σ) estimated from seven replicate integrations of the blank (1% v/v nitric acid) following calibration of the instrument with three replicate integrations of a multi-element standard.

TABLE 2: COMMON MOLECULAR ION INTERFERENCES IN ICP-MS

BACKGROUND MOLECULAR IONS

Molecular Ion	Mass	Element Interference[a]
NH^+	15	
OH^+	17	
OH_2^+	18	
C_2^+	24	
CN^+	26	
CO^+	28	
N_2^+	28	
N_2H^+	29	
NO^+	30	
NOH^+	31	
O_2^+	32	
O_2H^+	33	
$^{36}ArH^+$	37	
$^{38}ArH^+$	39	
$^{40}ArH^+$	41	
CO_2^+	44	
CO_2H^+	45	Sc
ArC^+, ArO^+	52	Cr
ArN^+	54	Cr
$ArNH^+$	55	Mn
ArO^+	56	
$ArOH^+$	57	
$^{40}Ar^{36}Ar^+$	76	Se
$^{40}Ar^{38}Ar^+$	78	Se
$^{40}Ar_2^+$	80	Se

[a] method elements or internal standards affected by the molecular ions.

TABLE 2 (Continued).

MATRIX MOLECULAR IONS

CHLORIDE Molecular Ion	Mass	Element Interference
$^{35}ClO^+$	51	V
$^{35}ClOH^+$	52	Cr
$^{37}ClO^+$	53	Cr
$^{37}ClOH^+$	54	Cr
$Ar^{35}Cl^+$	75	As
$Ar^{37}Cl^+$	77	Se

SULPHATE Molecular Ion	Mass	Element Interference
$^{32}SO^+$	48	
$^{32}SOH^+$	49	
$^{34}SO^+$	50	V,Cr
$^{34}SOH^+$	51	V
SO_2^+, S_2^+	64	Zn
$Ar^{32}S^+$	72	
$Ar^{34}S^+$	74	

PHOSPHATE Molecular Ion	Mass	Element Interference
PO^+	47	
POH^+	48	
PO_2^+	63	Cu
ArP^+	71	

GROUP I, II METALS Molecular Ion	Mass	Element Interference
$ArNa^+$	63	Cu
ArK^+	79	
$ArCa^+$	80	

MATRIX OXIDES* Molecular Ion	Masses	Element Interference
TiO	62-66	Ni,Cu,Zn
ZrO	106-112	Ag,Cd
MoO	108-116	Cd

* Oxide interferences will normally be very small and will only impact the method elements when present at relatively high concentrations. Some examples of matrix oxides are listed of which the analyst should be aware. It is recommended that Ti and Zr isotopes are monitored in solid waste samples, which are likely to contain high levels of these elements. Mo is monitored as a method analyte.

TABLE 3: INTERNAL STANDARDS AND LIMITATIONS OF USE

Internal Standard	Mass	Possible Limitation
^{6}Lithium	6	a
Scandium	45	polyatomic ion interference
Yttrium	89	a,b
Rhodium	103	
Indium	115	isobaric interference by Sn
Terbium	159	
Holmium	165	
Lutetium	175	
Bismuth	209	a

a May be present in environmental samples.
b In some instruments Yttrium may form measurable amounts of YO^+ (105 amu) and YOH^+ (106 amu). If this is the case, care should be taken in the use of the cadmium elemental correction equation.

Internal standards recommended for use with this method are shown in bold face. Preparation procedures for these are included in section 7.3.

TABLE 4: RECOMMENDED ANALYTICAL ISOTOPES AND ADDITIONAL MASSES WHICH MUST BE MONITORED

Isotope	Element of Interest
27	Aluminum
121,123	Antimony
75	Arsenic
135,137	Barium
9	Beryllium
106,108,111,114	Cadmium
52,53	Chromium
59	Cobalt
63,65	Copper
206,207,208	Lead
55	Manganese
95,97,98	Molybdenum
60,62	Nickel
77,82	Selenium
107,109	Silver
203,205	Thallium
232	Thorium
238	Uranium
51	Vanadium
66,67,68	Zinc
83	Krypton
99	Ruthenium
105	Palladium
118	Tin

NOTE: Isotopes recommended for analytical determination are underlined.

TABLE 5: RECOMMENDED ELEMENTAL EQUATIONS FOR DATA CALCULATIONS

Element	Elemental Equation	Note
Al	$(1.000)(^{27}C)$	
Sb	$(1.000)(^{121}C)$	
As	$(1.000)(^{75}C)-(3.127)[(^{77}C)-(0.815)(^{82}C)]$	(1)
Ba	$(1.000)(^{137}C)$	
Be	$(1.000)(^{9}C)$	
Cd	$(1.000)(^{111}C)-(1.073)[(^{108}C)-(0.712)(^{106}C)]$	(2)
Cr	$(1.000)(^{52}C)$	(3)
Co	$(1.000)(^{59}C)$	
Cu	$(1.000)(^{63}C)$	
Pb	$(1.000)(^{206}C)+(1.000)(^{207}C)+(1.000)(^{208}C)$	(4)
Mn	$(1.000)(^{55}C)$	
Mo	$(1.000)(^{98}C)-(0.146)(^{99}C)$	(5)
Ni	$(1.000)(^{60}C)$	
Se	$(1.000)(^{82}C)$	(6)
Ag	$(1.000)(^{107}C)$	
Tl	$(1.000)(^{205}C)$	
Th	$(1.000)(^{232}C)$	
U	$(1.000)(^{238}C)$	
V	$(1.000)(^{51}C)-(3.127)[(^{53}C)-(0.113)(^{52}C)]$	(7)
Zn	$(1.000)(^{66}C)$	

Cont.

TABLE 5 (Continued)

INTERNAL STANDARDS

Element	Elemental Equation	Note
Bi	$(1.000)(^{209}C)$	
In	$(1.000)(^{115}C)-(0.016)(^{118}C)$	(8)
Sc	$(1.000)(^{45}C)$	
Tb	$(1.000)(^{159}C)$	
Y	$(1.000)(^{89}C)$	

C - calibration blank subtracted counts at specified mass.
(1) - correction for chloride interference with adjustment for Se77. ArCl 75/77 ratio may be determined from the reagent blank.
(2) - correction for MoO interference. An additional isobaric elemental correction should be made if palladium is present.
(3) - in 0.4% v/v HCl, the background from ClOH will normally be small. However the contribution may be estimated from the reagent blank.
(4) - allowance for isotopic variability of lead isotopes.
(5) - isobaric elemental correction for ruthenium.
(6) - some argon supplies contain krypton as an impurity. Selenium is corrected for Kr82 by background subtraction.
(7) - correction for chloride interference with adjustment for Cr53. ClO 51/53 ratio may be determined from the reagent blank.
(8) - isobaric elemental correction for tin.

TABLE 6: INSTRUMENT OPERATING CONDITIONS FOR PRECISION AND RECOVERY DATA

Instrument	VG PlasmaQuad Type I
Plasma forward power	1.35 kW
Coolant flow rate	13.5 L/min
Auxiliary flow rate	0.6 L/min
Nebulizer flow rate	0.78 L/min
Solution uptake rate	0.6 mL/min
Spray chamber temperature	15°C
Data Acquisition	
Detector mode	Pulse counting
Replicate integrations	3
Mass range	8 - 240 amu
Dwell time	320 μs
Number of MCA channels	2048
Number of scan sweeps	85
Total acquisition time	3 minutes per sample

TABLE 7: TOTAL RECOVERABLE METHOD DETECTION LIMITS

ELEMENT	RECOMMENDED ANALYTICAL MASS	MDL+ AQUEOUS µg/L	MDL+ SOLIDS mg/kg
Aluminum	27	1.0	0.4
Antimony	121	0.4	0.2
Arsenic	75	1.4	0.6
Barium	137	0.8	0.4
Beryllium	9	0.3	0.1
Cadmium	111	0.5	0.2
Chromium	52	0.9	0.4
Cobalt	59	0.09	0.04
Copper	63	0.5	0.2
Lead	206,207,208	0.6	0.3
Manganese	55	0.1	0.05
Molybdenum	98	0.3	0.1
Nickel	60	0.5	0.2
Selenium	82	7.9	3.2
Silver	107	0.1	0.05
Thallium	205	0.3	0.1
Thorium	232	0.1	0.05
Uranium	238	0.1	0.05
Vanadium	51	2.5	1.0
Zinc	66	1.8	0.7

+ MDL concentrations are computed for original matrix with allowance for sample dilution during preparation.

TABLE 8 : PRECISION AND RECOVERY DATA IN AQUEOUS MATRICES

DRINKING WATER

Element	Sample Concn. (µg/L)	Low Spike (µg/L)	Average Recovery R (%)	S(R)	RPD	High Spike (µg/L)	Average Recovery R (%)	S(R)	RPD
Al	175	50	115.8	5.9	0.4	200	102.7	1.6	1.1
Sb	<0.4	10	99.1	0.7	2.0	100	100.8	0.7	2.0
As	<1.4	50	99.7	0.8	2.2	200	102.5	1.1	2.9
Ba	43.8	50	94.8	3.9	5.8	200	95.6	0.8	1.7
Be	<0.3	10	113.5	0.4	0.9	100	111.0	0.7	1.8
Cd	<0.5	10	97.0	2.8	8.3	100	101.5	0.4	1.0
Cr	<0.9	10	111.0	3.5	9.0	100	99.5	0.1	0.2
Co	0.11	10	94.4	0.4	1.1	100	93.6	0.5	1.4
Cu	3.6	10	101.8	8.8	17.4	100	91.6	0.3	0.3
Pb	0.87	10	97.8	2.0	2.8	100	99.0	0.8	2.2
Mn	0.96	10	96.9	1.8	4.7	100	95.8	0.6	1.8
Mo	1.9	10	99.4	1.6	3.4	100	98.6	0.4	1.0
Ni	1.9	10	100.2	5.7	13.5	100	95.2	0.5	1.3
Se	<7.9	50	99.0	1.8	5.3	200	93.5	3.5	10.7
Ag	<0.1	50	100.7	1.5	4.2	200	99.0	0.4	1.0
Tl	<0.3	10	97.5	0.4	1.0	100	98.5	1.7	4.9
Th	<0.1	10	109.0	0.7	1.8	100	106.0	1.4	3.8
U	0.23	10	110.7	1.4	3.5	100	107.8	0.7	1.9
V	<2.5	50	101.4	0.1	0.4	200	97.5	0.7	2.1
Zn	5.2	50	103.4	3.3	7.7	200	96.4	0.5	1.0

S(R) Standard deviation of percent recovery.
RPD Relative percent difference between duplicate spike determinations.
< Sample concentration below established method detection limit.

TABLE 8 : PRECISION AND RECOVERY DATA IN AQUEOUS MATRICES (Cont).

WELL WATER

Element	Sample Concn. (µg/L)	Low Spike (µg/L)	Average Recovery R (%)	S(R)	RPD	High Spike (µg/L)	Average Recovery R (%)	S(R)	RPD
Al	34.3	50	100.1	3.9	0.8	200	102.6	1.1	1.3
Sb	0.46	10	98.4	0.9	1.9	100	102.5	0.7	1.9
As	<1.4	50	110.0	6.4	16.4	200	101.3	0.2	0.5
Ba	106	50	95.4	3.9	3.3	200	104.9	1.0	1.6
Be	<0.3	10	104.5	0.4	1.0	100	101.4	1.2	3.3
Cd	1.6	10	88.6	1.7	3.8	100	98.6	0.6	1.6
Cr	<0.9	10	111.0	0.0	0.0	100	103.5	0.4	1.0
Co	2.4	10	100.6	1.0	1.6	100	104.1	0.4	0.9
Cu	37.4	10	104.3	5.1	1.5	100	100.6	0.8	1.5
Pb	3.5	10	95.2	2.5	1.5	100	99.5	1.4	3.9
Mn	2770	10	*	*	1.8	100	*	*	0.7
Mo	2.1	10	103.8	1.1	1.6	100	102.9	0.7	1.9
Ni	11.4	10	116.5	6.3	6.5	100	99.6	0.3	0.0
Se	<7.9	50	127.3	8.4	18.7	200	101.3	0.2	0.5
Ag	<0.1	50	99.2	0.4	1.0	200	101.5	1.4	3.9
Tl	<0.3	10	93.9	0.1	0.0	100	100.4	1.8	5.0
Th	<0.1	10	103.0	0.7	1.9	100	104.5	1.8	4.8
U	1.8	10	106.0	1.1	1.6	100	109.7	2.5	6.3
V	<2.5	50	105.3	0.8	2.1	200	105.8	0.2	0.5
Zn	554	50	*	*	1.2	200	102.1	5.5	3.2

S(R) Standard deviation of percent recovery.
RPD Relative percent difference between duplicate spike determinations.
< Sample concentration below established method detection limit.
* Spike concentration <10% of sample background concentration.

TABLE 8 : PRECISION AND RECOVERY DATA IN AQUEOUS MATRICES (Cont).

POND WATER

Element	Sample Concn. (µg/L)	Low Spike (µg/L)	Average Recovery R (%)	S(R)	RPD	High Spike (µg/L)	Average Recovery R (%)	S(R)	RPD
Al	610	50	*	*	1.7	200	78.2	9.2	5.5
Sb	<0.4	10	101.1	1.1	2.9	100	101.5	3.0	8.4
As	<1.4	50	100.8	2.0	5.6	200	96.8	0.9	2.6
Ba	28.7	50	102.1	1.8	2.4	200	102.9	3.7	9.0
Be	<0.3	10	109.1	0.4	0.9	100	114.4	3.9	9.6
Cd	<0.5	10	106.6	3.2	8.3	100	105.8	2.8	7.6
Cr	2.0	10	107.0	1.0	1.6	100	100.0	1.4	3.9
Co	0.79	10	101.6	1.1	2.7	100	101.7	1.8	4.9
Cu	5.4	10	107.5	1.4	1.9	100	98.1	2.5	6.8
Pb	1.9	10	108.4	1.5	3.2	100	106.1	0.0	0.0
Mn	617	10	*	*	1.1	100	139.0	11.1	4.0
Mo	0.98	10	104.2	1.4	3.5	100	104.0	2.1	5.7
Ni	2.5	10	102.0	2.3	4.7	100	102.5	2.1	5.7
Se	<7.9	50	102.7	5.6	15.4	200	105.5	1.4	3.8
Ag	0.12	50	102.5	0.8	2.1	200	105.2	2.7	7.1
Tl	<0.3	10	108.5	3.2	8.3	100	105.0	2.8	7.6
Th	0.19	10	93.1	3.5	10.5	100	93.9	1.6	4.8
U	0.30	10	107.0	2.8	7.3	100	107.2	1.8	4.7
V	3.5	50	96.1	5.2	14.2	200	101.5	0.2	0.5
Zn	6.8	50	99.8	1.7	3.7	200	100.1	2.8	7.7

S(R) Standard deviation of percent recovery.
RPD Relative percent difference between duplicate spike determinations.
< Sample concentration below established method detection limit.
* Spike concentration <10% of sample background concentration.

TABLE 8 : PRECISION AND RECOVERY DATA IN AQUEOUS MATRICES (Cont).

SEWAGE TREATMENT PRIMARY EFFLUENT

Element	Sample Concn. (µg/L)	Low Spike (µg/L)	Average Recovery R (%)	S(R)	RPD	High Spike (µg/L)	Average Recovery R (%)	S(R)	RPD
Al	1150	50	*	*	3.5	200	100.0	13.8	1.5
Sb	1.5	10	95.7	0.4	0.9	100	104.5	0.7	1.9
As	<1.4	50	104.2	4.5	12.3	200	101.5	0.7	2.0
Ba	202	50	79.2	9.9	2.5	200	108.6	4.6	5.5
Be	<0.3	10	110.5	1.8	4.5	100	106.4	0.4	0.9
Cd	9.2	10	101.2	1.3	0.0	100	102.3	0.4	0.9
Cr	128	10	*	*	1.5	100	102.1	1.7	0.4
Co	13.4	10	95.1	2.7	2.2	100	99.1	1.1	2.7
Cu	171	10	*	*	2.4	100	105.2	7.1	0.7
Pb	17.8	10	95.7	3.8	1.1	100	102.7	1.1	2.5
Mn	199	10	*	*	1.5	100	103.4	2.1	0.7
Mo	136	10	*	*	1.4	100	105.7	2.4	2.1
Ni	84.0	10	88.4	16.3	4.1	100	98.0	0.9	0.0
Se	<7.9	50	112.0	10.9	27.5	200	108.8	3.0	7.8
Ag	10.9	50	97.1	0.7	1.5	200	102.6	1.4	3.7
Tl	<0.3	10	97.5	0.4	1.0	100	102.0	0.0	0.0
Th	0.11	10	15.4	1.8	30.3	100	29.3	0.8	8.2
U	0.71	10	109.4	1.8	4.3	100	109.3	0.7	1.8
V	<2.5	50	90.9	0.9	0.6	200	99.4	2.1	6.0
Zn	163	50	85.8	3.3	0.5	200	102.0	1.5	1.9

S(R) Standard deviation of percent recovery.
RPD Relative percent difference between duplicate spike determinations.
< Sample concentration below established method detection limit.
* Spike concentration <10% of sample background concentration.

TABLE 8 : PRECISION AND RECOVERY DATA IN AQUEOUS MATRICES (Cont).

INDUSTRIAL EFFLUENT

Element	Sample Concn. (µg/L)	Low Spike (µg/L)	Average Recovery R (%)	S(R)	RPD	High Spike (µg/L)	Average Recovery R (%)	S(R)	RPD
Al	44.7	50	98.8	8.7	5.7	200	90.4	2.1	2.2
Sb	2990	10	*	*	0.3	100	*	*	0.0
As	<1.4	50	75.1	1.8	6.7	200	75.0	0.0	0.0
Ba	100	50	96.7	5.5	3.4	200	102.9	1.1	0.7
Be	<0.3	10	103.5	1.8	4.8	100	100.0	0.0	0.0
Cd	10.1	10	106.5	4.4	2.4	100	97.4	1.1	2.8
Cr	171	10	*	*	0.0	100	127.7	2.4	1.7
Co	1.3	10	90.5	3.2	8.7	100	90.5	0.4	1.3
Cu	101	10	*	*	0.9	100	92.5	2.0	1.6
Pb	294	10	*	*	2.6	100	108.4	2.1	0.0
Mn	154	10	*	*	2.8	100	103.6	3.7	1.6
Mo	1370	10	*	*	1.4	100	*	*	0.7
Ni	17.3	10	107.4	7.4	5.0	100	88.2	0.7	1.0
Se	15.0	50	129.5	9.3	15.1	200	118.3	1.9	3.6
Ag	<0.1	50	91.8	0.6	1.7	200	87.0	4.9	16.1
Tl	<0.3	10	90.5	1.8	5.5	100	98.3	1.0	2.8
Th	0.29	10	109.6	1.2	2.7	100	108.7	0.0	0.0
U	0.17	10	104.8	2.5	6.6	100	109.3	0.4	0.9
V	<2.5	50	74.9	0.1	0.3	200	72.0	0.0	0.0
Zn	43.4	50	85.0	4.0	0.6	200	97.6	1.0	0.4

S(R) Standard deviation of percent recovery.
RPD Relative percent difference between duplicate spike determinations.
< Sample concentration below established method detection limit.
* Spike concentration <10% of sample background concentration.

TABLE 9 : PRECISION AND RECOVERY DATA IN SOLID MATRICES

EPA HAZARDOUS SOIL #884

Element	Sample Concn. (mg/kg)	Low+ Spike (mg/kg)	Average Recovery R (%)	S(R)	RPD	High+ Spike (mg/kg)	Average Recovery R (%)	S(R)	RPD
Al	5170	20	*	*	-	100	*	*	-
Sb	5.4	20	69.8	2.5	4.7	100	70.4	1.8	6.5
As	8.8	20	104.7	5.4	9.1	100	102.2	2.2	5.4
Ba	113	20	54.9	63.6	18.6	100	91.0	9.8	0.5
Be	0.6	20	100.1	0.6	1.5	100	102.9	0.4	1.0
Cd	1.8	20	97.3	1.0	1.4	100	101.7	0.4	1.0
Cr	83.5	20	86.7	16.1	8.3	100	105.5	1.3	0.0
Co	7.1	20	98.8	1.2	1.9	100	102.9	0.7	1.8
Cu	115	20	86.3	13.8	3.4	100	102.5	4.2	4.6
Pb	152	20	85.0	45.0	13.9	100	151.7	25.7	23.7
Mn	370	20	*	*	12.7	100	85.2	10.4	2.2
Mo	4.8	20	95.4	1.5	2.9	100	95.2	0.7	2.0
Ni	19.2	20	101.7	3.8	1.0	100	102.3	0.8	0.8
Se	<3.2	20	79.5	7.4	26.4	100	100.7	9.4	26.5
Ag	1.1	20	96.1	0.6	0.5	100	94.8	0.8	2.3
Tl	0.24	20	94.3	1.1	3.1	100	97.9	1.0	2.9
Th	1.0	20	69.8	0.6	1.3	100	76.0	2.2	7.9
U	1.1	20	100.1	0.2	0.0	100	102.9	0.0	0.0
V	17.8	20	109.2	4.2	2.3	100	106.7	1.3	2.4
Zn	128	20	87.0	27.7	5.5	100	113.4	12.9	14.1

S(R) Standard deviation of percent recovery.
RPD Relative percent difference between duplicate spike determinations.
< Sample concentration below established method detection limit.
* Spike concentration <10% of sample background concentration.
- Not determined.
+ Equivalent.

TABLE 9 : PRECISION AND RECOVERY DATA IN SOLID MATRICES (Cont).

NBS 1645 RIVER SEDIMENT

Element	Sample Concn. (mg/kg)	Low+ Spike (mg/kg)	Average Recovery R (%)	S(R)	RPD	High+ Spike (mg/kg)	Average Recovery R (%)	S(R)	RPD
Al	5060	20	*	*	-	100	*	*	-
Sb	21.8	20	73.9	6.5	9.3	100	81.2	1.5	3.9
As	67.2	20	104.3	13.0	7.6	100	107.3	2.1	2.9
Ba	54.4	20	105.6	4.9	2.8	100	98.6	2.2	3.9
Be	0.59	20	88.8	0.2	0.5	100	87.9	0.1	0.2
Cd	8.3	20	92.9	0.4	0.0	100	95.7	1.4	3.9
Cr	29100	20	*	*	-	100	*	*	-
Co	7.9	20	97.6	1.3	2.6	100	103.1	0.0	0.0
Cu	112	20	121.0	9.1	1.5	100	105.2	2.2	1.8
Pb	742	20	*	*	-	100	-	-	-
Mn	717	20	*	*	-	100	-	-	-
Mo	17.1	20	89.8	8.1	12.0	100	98.4	0.7	0.9
Ni	41.8	20	103.7	6.5	4.8	100	102.2	0.8	0.0
Se	<3.2	20	108.3	14.3	37.4	100	93.9	5.0	15.1
Ag	1.8	20	94.8	1.6	4.3	100	96.2	0.7	1.9
Tl	1.2	20	91.2	1.3	3.6	100	94.4	0.4	1.3
Th	0.90	20	91.3	0.9	2.6	100	92.3	0.9	2.8
U	0.79	20	95.6	1.8	5.0	100	98.5	1.2	3.5
V	21.8	20	91.8	4.6	5.7	100	100.7	0.6	0.8
Zn	1780	20	*	*	-	100	*	*	-

S(R) Standard deviation of percent recovery.
RPD Relative percent difference between duplicate spike determinations.
< Sample concentration below established method detection limit.
* Spike concentration <10% of sample background concentration.
- Not determined.
+ Equivalent.

TABLE 9 : PRECISION AND RECOVERY DATA IN SOLID MATRICES (Cont).

EPA ELECTROPLATING SLUDGE #286

Element	Sample Concn. (mg/kg)	Low+ Spike (mg/kg)	Average Recovery R (%)	S(R)	RPD	High+ Spike (mg/kg)	Average Recovery R (%)	S(R)	RPD
Al	5110	20	*	*	-	100	*	*	-
Sb	8.4	20	55.4	1.5	4.1	100	61.0	0.2	0.9
As	41.8	20	91.0	2.3	1.7	100	94.2	0.8	1.5
Ba	27.3	20	1.8	7.1	8.3	100	0	1.5	10.0
Be	0.25	20	92.0	0.9	2.7	100	93.4	0.3	0.9
Cd	112	20	85.0	5.2	1.6	100	88.5	0.8	0.5
Cr	7980	20	*	*	-	100	*	*	-
Co	4.1	20	89.2	1.8	4.6	100	88.7	1.5	4.6
Cu	740	20	*	*	6.0	100	61.7	20.4	5.4
Pb	1480	20	*	*	-	100	*	*	-
Mn	295	20	*	*	-	100	-	-	-
Mo	13.3	20	82.9	1.2	1.3	100	89.2	0.4	1.0
Ni	450	20	*	*	6.8	100	83.0	10.0	4.5
Se	3.5	20	89.7	3.7	4.2	100	91.0	6.0	18.0
Ag	5.9	20	89.8	2.1	4.6	100	85.1	0.4	1.1
Tl	1.9	20	96.9	0.9	2.4	100	98.9	0.9	2.4
Th	3.6	20	91.5	1.3	3.2	100	97.4	0.7	2.0
U	2.4	20	107.7	2.0	4.6	100	109.6	0.7	1.8
V	21.1	20	105.6	1.8	2.1	100	97.4	1.1	2.5
Zn	13300	20	*	*	-	100	*	*	-

S(R) Standard deviation of percent recovery.
RPD Relative percent difference between duplicate spike determinations.
< Sample concentration below established method detection limit.
* Spike concentration <10% of sample background concentration.
- Not determined.
+ Equivalent.

METHOD 200.9

DETERMINATION OF TRACE ELEMENTS BY STABILIZED TEMPERATURE GRAPHITE FURNACE ATOMIC ABSORPTION SPECTROMETRY

John T. Creed, Theodore D. Martin, Larry B. Lobring and James W. O'Dell
Inorganic Chemistry Branch
Chemistry Research Division

Revision 1.2
April 1991

ENVIRONMENTAL MONITORING SYSTEMS LABORATORY
OFFICE OF RESEARCH AND DEVELOPMENT
U.S. ENVIRONMENTAL PROTECTION AGENCY
CINCINNATI, OHIO 45268

METHOD 200.9

DETERMINATION OF TRACE ELEMENTS BY STABILIZED TEMPERATURE GRAPHITE FURNACE ATOMIC ABSORPTION

1. SCOPE AND APPLICATION

1.1 This method provides procedures for the determination of dissolved and total recoverable elements in ground water, surface water, drinking water and wastewater. This method is also applicable to total recoverable elements in sediment, sludges, biological tissues, and solid waste samples.

1.2 Dissolved elements are determined after suitable filtration and acid preservation. Acid digestion procedures are required prior to the determination of total recoverable elements. Appropriate digestion procedures for biological tissues should be utilized prior to sample analysis.

1.3 This method is applicable to the determination of the following elements by stabilized temperature graphite furnace atomic absorption spectrometry (STGFAA).

Element		Chemical Abstract Services Registry Numbers (CASRN)
Aluminum	(Al)	7429-90-5
Antimony	(Sb)	7440-36-0
Arsenic	(As)	7440-38-2
Beryllium	(Be)	7440-41-7
Cadmium	(Cd)	7440-43-9
Chromium	(Cr)	7440-47-3
Cobalt	(Co)	7440-48-4
Copper	(Cu)	7440-50-8
Iron	(Fe)	7439-89-6
Lead	(Pb)	7439-92-1
Manganese	(Mn)	7439-96-5
Nickel	(Ni)	7440-02-0
Selenium	(Se)	7782-49-2
Silver	(Ag)	7440-22-4
Thallium	(Tl)	7440-28-0
Tin	(Sn)	7440-31-5
Zinc	(Zn)	7440-66-6

NOTE: Method detection limit and instrumental operating conditions for the applicable elements are listed in Table 2. These are intended as a guide to instrumental detection limits typical of a system optimized for the element employing commercial instrumentation. However, actual method detection limits and linear working ranges will be dependent on the

sample matrix, instrumentation and selected operating conditions.

1.4 The sensitivity and limited linear dynamic range (LDR) of GFAA often implies the need to dilute a sample prior to the analysis. The actual magnitude of the dilution as well as the cleanliness of the labware used to perform the dilution can dramatically influence the quality of the analytical results. Therefore, samples types requiring large dilutions should be analyzed by an alternative analytical method which has a larger LDR or which is inherently less sensitive than GFAA.

1.5 This method should be used by analysts experienced in the use of GFAA.

2. SUMMARY OF METHOD

2.1 This method describes the determination of applicable elements by stabilized temperature platform graphite furnace atomic absorption (STPGFAA). In STPGFAA the sample (and the matrix modifier, if required) is first pipetted onto the platform or a device which provides delayed atomization. The sample is then dried at a relatively low temperature (~120°C) to avoid spattering. Once dried, the sample is normally pretreated in a char or ashing step which is designed to minimize the interference effects caused by the concomitant sample matrix. After the char step the furnace is allowed to cool prior to atomization. The atomization cycle is characterized by rapid heating of the furnace to a temperature where the metal (analyte) is atomized from the pyrolytic graphite surface. The resulting atomic cloud absorbs the element specific atomic emission produced by a hollow cathode lamp (HCL) or a electrodeless discharge lamp (EDL). Because the resulting absorbance usually has a nonspecific component associated with the actual analyte absorbance, an instrumental background correction device is necessary to subtract from the total signal the component which is nonspecific to the analyte. In the absence of interferences, the background corrected absorbance is directly related to the concentration of the analyte. Interferences relating to STPGFAA (Sect. 4) must be recognized and corrected. Instrumental drift as well as suppressions or enhancements of instrument response caused by the sample matrix must be corrected for by the method of standard addition (Sect. 11.5).

3. DEFINITIONS

3.1 DISSOLVED - Material that will pass through a 0.45-μm membrane filter assembly, prior to sample acidification.

3.2 TOTAL RECOVERABLE - The concentration of analyte determined on an unfiltered sample following treatment with hot dilute mineral acid.

3.3 INSTRUMENT DETECTION LIMIT (IDL) - The concentration equivalent of an analyte signal equal to three times the standard deviation of the calibration blank signal at the selected absorbance line.

3.4 METHOD DETECTION LIMIT (MDL) - The minimum concentration of an analyte that can be identified, measured and reported with 99% confidence that the analyte concentration is greater than zero.

3.5 LINEAR DYNAMIC RANGE (LDR) - The concentration range over which the analytical working curve remains linear.

3.6 LABORATORY REAGENT BLANK (LRB) - An aliquot of reagent water that is treated exactly as a sample including exposure to all glassware, equipment, and reagents that are used with samples. The LRB is used to determine if method analytes or other interferences are present in the laboratory environment, reagents or apparatus.

3.7 CALIBRATION BLANK - A volume of ASTM type I water acidified such that the acid(s) concentration is identical to the acid(s) concentration associated with the calibration standards.

3.8 STOCK STANDARD SOLUTION - A concentrated solution containing one analyte prepared in the laboratory using a assayed reference compound or purchased from a reputable commercial source.

3.9 CALIBRATION STANDARD (CAL) - A solution prepared from the stock standard solution which is used to calibrate the instrument response with respect to analyte concentration.

3.10 LABORATORY FORTIFIED BLANK (LFB) - An aliquot of reagent water to which a known quantity of each method analyte is added in the laboratory. The LFB is analyzed exactly like a sample, and its purpose is to determine whether the method is within accepted control limits.

3.11 LABORATORY FORTIFIED SAMPLE MATRIX (LFM) - An aliquot of an environmental sample to which a known quantity of each method analyte is added in the laboratory. The LFM is analyzed exactly like a sample, and its purpose is to determine whether the sample matrix contributes bias to the analytical results.

3.12 QUALITY CONTROL SAMPLE (QCS) - A solution containing a known concentration of each method analyte derived from externally prepared test materials. The QCS is obtained from a source external to the laboratory and is used to check laboratory performance.

3.13 MATRIX MODIFIER - A substance added to the graphite furnace along with the sample in order to minimize the interference effects by selective volatilization of either analyte or matrix components.

3.14 STANDARD ADDITION - The addition of a known amount of analyte to the sample in order to determine the relative response of the detector to an analyte within the sample matrix. The relative response is then used to assess the sample analyte concentration.

4. INTERFERENCES

4.1 Several interference sources may cause inaccuracies in the determination of trace elements by GFAA. These interferences can be classified into three major subdivisions, namely spectral, non-spectral and memory.

4.1.1 Spectral - Interferences resulting from the absorbance of light by a molecule and/or an atom which is not the analyte of interest. Spectral interferences caused by an element only occur if there is a spectral overlap between the wavelength of the interfering element and the analyte of interest. Fortunately, this type of interference is relatively uncommon in STPGFAA because of the narrow atomic line widths associated with STPGFAA. In addition, the use of appropriate furnace temperature programs and high spectral purity lamps as light sources can minimize the possibility of this type of interference. However, molecular absorbances can span over several hundred nanometers producing broadband spectral interferences. This type of interference is far more common in STPGFAA. The use of matrix modifiers, selective volatilization and background correctors are all attempts to eliminate unwanted non-specific absorbance. The non-specific component of the total absorbance can vary considerably from sample type to sample type. Therefore, the effectiveness of a particular background correction device may vary depending on the actual analyte wavelength used as well as the nature and magnitude of the interference.

Spectral interferences are also caused by the emission from black body radiation produced during the atomization furnace cycle. This black body emission reaches the photomultiplier tube producing erroneous results. The magnitude of this interference can be minimized by proper furnace tube alignment and monochromator design. In addition, atomization temperatures which adequately volatilize the analyte of interest without producing unnecessary black body radiation can help reduce unwanted background emission produced during atomization.

Note: A spectral interference may be manifested by extremely high backgrounds (1.0 abs*) which may exceed the capability of the background corrector and/or it may be manifested as a non-analyte element which may cause a direct spectral overlap with the analyte of interest. If a spectral interference is suspected, the analyst is advised to:

* This background level is given as a guide and is not intended to serve as an absolute value which may be applied in all situations.

1. Dilute the sample if the analyte absorbance is large enough to sacrifice some of the sensitivity. This dilution may dramatically reduce a molecular background or reduce it to the point where the background correction device is capable of adequately removing the remaining nonspecific component. If the non-specific component is produced by a spectral overlap with an interfering element, the change in absorbance caused by dilution of the sample should decrease in a linear fashion, provided the undiluted and diluted sample are both within the linear range of the interfering element.

2. If dilution is not acceptable because of the relatively low analyte absorbance readings or the dilution produces a linear decrease in the nonspecific absorbance, the analyst is advised to investigate another analyte wavelength which may eliminate the suspected spectral interference(s).

3. If dilution and alternative spectral lines are not acceptable, the analyst is advised to attempt to selectively volatilize the analyte or the non-specific component thereby eliminating the unwanted interference(s) by atomizing the analyte in an interference-free environment.

4. If none of the above advice is applicable and the spectral interference persists, an alternative analytical method which is not based on the same type of physical/chemical principle may be necessary to evaluate the actual analyte concentration.

4.1.2 Non-spectral - Interferences caused by sample components which inhibit the formation of free atomic analyte atoms during the atomization cycle. The use of a delayed atomization device which provides stabilized temperatures is required, because these devices provide an environment which is more conducive to the formation of free analyte atoms and thereby minimize this type of interference. This type of interference can be detected by analyzing a sample plus a laboratory fortified sample matrix early within any analysis set. From this data, immediately calculate the percent recovery (Sect. 10.4.2). If the percent recovery is outside the laboratory determined control limits (Sect. 10.3.3) a potential problem should be suspected. If the result indicates a potential matrix effect, the analyst is advised to:

1. Perform the method of standard addition* (see Sect. 11.5); if the "percent recovery" from the method of standard addition is drastically different from the percent recovery from LFM, then lab contamination or another lab related problem should be suspected and corrected.

NOTE: If contamination is suspected, analyze the LFB and calculate a percent recovery.

2. If the two recoveries are approximately equal* and the response from the standard addition is dramatically different than that which would be calculated from the calibration curve, the sample should be suspected of a matrix induced interference and analyzed by the method of standard addition (Sect. 11.5).

* The limitations listed in Sect. 11.5 must be met in order to apply these recommendations.

4.1.3 Memory interferences resulting from analyzing a sample containing a high concentration of an element (typically a high atomization temperature element) which cannot be removed quantitatively in one complete set of furnace steps. The analyte which remains in the furnace can produce false positive signals on subsequent sample(s). Therefore, the analyst should establish the analyte concentration which can be injected into the furnace and adequately removed in one complete set of furnace cycles. This concentration represents the maximum concentration of analyte within a sample which will not cause a memory interference on the subsequent sample(s). If this concentration is exceeded, the sample should be diluted and a blank should be analyzed (to assure the memory affect has been eliminated) before reanalyzing the diluted sample.

Note: Multiple clean out furnace cycles may be necessary in order to fully utilize the LDR for certain elements.

4.1.4 Specific Element Interferences

Antimony: Antimony suffers from an interference produced by K_2SO_4 [5]. In the absence of hydrogen in the char cycle (1300°C*), K_2SO_4 produces a relatively high (1.2 abs) background absorbance which can produce a false signal even with Zeeman background correction. However, this background level can be dramatically reduced (0.1 abs) by the use of a hydrogen/argon gas mixture in the char step. This reduction in background is strongly influenced by the temperature of the char step.

* The actual furnace temperature may vary from instrument to instrument. Therefore, the actual furnace temperature should be determined on an individual bases.

Aluminum: The Pd may have elevated levels of Al which will cause elevated blank absorbances.

Arsenic: The HCl present from the digestion procedure can influence the sensitivity for As. A 1% HCl solution with Pd used as a modifier results in a 40% loss in sensitivity relative to the analyte in a 1% HNO_3 solution. The use of $Pd/Mg/H_2$ as a modifier reduces this suppression to about 10%.

Cadmium: The HCl present from the digestion procedure can influence the sensitivity for Cd. A 1% HCl solution with Pd used as a modifier results in a 70% loss in sensitivity relative to the analyte in a 1% HNO_3 solution. The use of $Pd/Mg/H_2$ as a modifier reduces this suppression to less than 10%.

Copper: Pd lines at 324.27 nm and 325.16 nm may produce an interference on the Cu line at 324.8 nm[5].

Lead: The HCl present from the digestion procedure can influence the sensitivity for Pb. A 1% HCl solution with Pd used as a modifier results in a 70% loss in sensitivity relative to the analyte response in a 1% HNO_3 solution. The use of $Pd/Mg/H_2$ as a modifier reduces this suppression to less than 10%.

Selenium: Iron has been shown to suppress Se response with continuum source background correction[5]. In addition, the use of hydrogen as a purge gas during the dry and char steps can cause a suppression in Se response if not purged from the furnace prior to atomization.

Silver: The Pd used in the modifier preparation may have elevated levels of Ag which will cause elevated blank absorbances.

5. SAFETY

5.1 The toxicity or carcinogenicity of reagents used in this method has not been fully established. Each chemical should be regarded as a potential health hazard, and exposure to these compounds should be as low as reasonably achievable. Each laboratory is responsible for maintaining a current awareness file of OSHA regulations regarding the safe handling of the chemicals specified in this method[1,2]. A reference file of material data handling sheets should also be available to all personnel involved in the chemical analysis.

5.2 The graphite tube during atomization emits intense UV radiation. Suitable precautions should be taken to protect personnel from such a hazard.

5.3 The use of argon/hydrogen gas mixture during the dry and char steps may evolve a considerable amount of HCl gas. Therefore, adequate ventilation is required.

6. APPARATUS AND EQUIPMENT

6.1 GRAPHITE FURNACE ATOMIC ABSORBANCE SPECTROPHOTOMETER

6.1.1 The GFAA spectrometer must be capable of programmed heating of the graphite tube and the associated delayed atomization device. The instrument should be equipped with an adequate background correction device capable of removing undesirable non-specific absorbance over the spectral region of interest. The capability to record relatively fast (< 1 sec) transient signals and evaluate data on a peak area basis is preferred. In addition, a recirculating refrigeration bath is recommended for improved reproduc-ibility of furnace temperatures. The data shown in the tables were obtained using the stabilized temperature platform and Zeeman background correction.

6.1.2 Single element hollow cathode lamps or single element electrodeless discharge lamps along with the associated power supplies.

6.1.3 Argon gas supply (high-purity grade, 99.99%).

6.1.4 A 5% hydrogen in argon gas mix and the necessary hardware to use this gas mixture during specific furnace cycles.

6.1.5 Autosampler - Although not specifically required, the use of an autosampler is highly recommended.

6.2 GRAPHITE FURNACE OPERATING CONDITIONS--A guide to experimental conditions for the applicable elements are shown in Table 2

6.3 SAMPLE PROCESSING EQUIPMENT

6.3.1 Balance - Analytical, capable of accurately weighing to 0.1 mg.

6.3.2 Hot Plate - Corning PC100 or equivalent.

6.3.3 Centrifuge - Steel cabinet with guard bowl, electric timer and brake.

6.3.4 Drying Oven capable of ± 3°C temperature control.

6.4 LABWARE - The determination of trace level elements requires a consideration of potential sources of contamination and analyte losses. Potential contamination sources include improperly cleaned laboratory apparatus and general contamination within the laboratory environment from dust, etc. A clean laboratory work area designated for trace element sample handling must be used. Sample containers can introduce positive and negative errors in the determination of trace elements by contributing contaminants through surface desorption or leaching and/or depleting element concentrations through adsorption processes. All reusable labware (glass, quartz, polyethylene, Teflon etc.), including the sample container, should be cleaned prior to use. Labware should be soaked overnight and thoroughly washed with laboratory-grade detergent and water, rinsed with water, and soaked for four hours in a mixture of dilute nitric and hydrochloric acid (1+2+9), followed by rinsing with ASTM type I water and oven drying.

NOTE: Chromic acid must not be used for cleaning glassware.

6.4.1 Glassware - Volumetric flasks and graduated cylinders.

6.4.2 Assorted calibrated pipettes.

6.4.3 Conical Phillips beakers, 250-mL with 50-mm watch glasses. Griffin beakers, 250-mL with 75-mm watch glasses.

6.4.4 Storage bottles - Narrow mouth bottles, Teflon FEP (fluorinated ethylene propylene) with Tefzel ETFE (ethylene tetrafluorethylene) screw closure, 125-mL and 250-mL capacities.

6.4.5 Wash bottle - One piece stem, Teflon FEP bottle with Tefzel ETFE screw closure, 125-mL capacity.

7. REAGENTS AND CONSUMABLE MATERIALS

7.1 REAGENTS - Reagents may contain elemental impurities which might affect analytical data. Because of the high sensitivity of GFAA, high-purity reagents should be used whenever possible. All acids used for this method must be ultra high-purity grade. Suitable acids are available from a number of manufacturers or may be prepared by sub-boiling distillation.

7.1.1 Nitric acid, concentrated (sp.gr. 1.41) (CASRN 7697-37-2).

7.1.2 Nitric acid (1+1) - Add 500 mL conc. nitric acid to 400 mL of ASTM type I water and dilute to 1 L.

7.1.3 Nitric acid (1+9) - Add 100 mL conc. to 400 mL of ASTM type I water and dilute to 1 L.

7.1.4 Hydrochloric acid, concentrated (sp.gr. 1.19) (CASRN 7647-01-0).

7.1.5 Hydrochloric acid (1+4) - Add 200 mL conc. hydrochloric acid to 400 mL ASTM type I water and dilute to 1000 mL.

7.1.6 Tartaric acid. ACS reagent grade (CASRN 87-69-4).

7.1.7 Matrix Modifier, dissolve 300 mg Palladium (Pd) powder in concentrated HNO_3 (1 mL of HNO_3, adding 10 mL of concentrated HCl if necessary). Dissolve 200 mg of $Mg(NO_3)_2$ in ASTM type 1 water. Pour the two solutions together and dilute to 100 mL with ASTM type 1 water.

Note: It is recommended that the matrix modifier be analyzed separately in order to assess the contribution of the modifier to the overall laboratory blank.

7.1.8 Ammonium hydroxide, concentrated (sp.gr. 0.902) (CASRN 1336-21-6).

7.2 WATER - For all sample preparation and dilutions, ASTM type I water (ASTM D1193) is required. Suitable water may be prepared by passing distilled water through a mixed bed of anion and cation exchange resins.

7.3 STANDARD STOCK SOLUTION - May be purchased from a reputable commercial source or prepared from ultra high-purity grade chemicals or metal (99.99 - 99.999% pure). All salts should be dried for 1 h at 105°C, unless otherwise specified. (**CAUTION**: Many metal salts are extremely toxic if inhaled or swallowed. Wash hands thoroughly after handling). The stock solution should be stored in Teflon bottles. The following procedures may be used for preparing standard stock solutions:

NOTE: Some metals, particularly those which form surface oxides, require cleaning prior to being weighed. This may be achieved by pickling the surface of the metal in acid. An amount in excess of the desired weight should be pickled repeatedly, rinsed with water, dried and weighed until the desired weight is achieved.

7.3.1 Aluminum solution, stock, 1 mL = 1000 μg Al: Pickle aluminum metal in warm (1+1) HCl to an exact weight of 0.100 g. Dissolve in 10 mL conc. HCl and 2 mL conc. nitric acid, heating to effect solution. Continue heating until volume is reduced to 4 mL. Cool and add 4 mL ASTM type I water. Heat until the volume is reduced to 2 mL. Cool and dilute to 100 mL with ASTM type I water.

7.3.2 Antimony solution, stock, 1 mL = 1000 μg Sb: Dissolve 0.100 g antimony powder in 2 mL (1+1) nitric acid and 0.5 mL conc. hydrochloric acid, heating to effect solution. Cool, add 20 mL ASTM type I water and 0.15g tartaric acid. Warm the solution to dissolve the white precipitate. Cool and dilute to 100 mL with ASTM type I water.

7.3.3 Arsenic solution, stock, 1 mL = 1000 μg As: Dissolve 0.1320 g As_2O_3 in a mixture of 50 mL ASTM type I water and 1 mL conc. ammonium hydroxide. Heat gently to dissolve. Cool and acidify the solution with 2 mL conc. nitric acid. Dilute to 100 mL with ASTM type I water.

7.3.4 Beryllium solution, stock 1 mL = 500 μg Be: Dissolve 1.965 g $BeSO_4.4H_2O$ (DO NOT DRY) in 50 mL ASTM Type I water. Add 2 mL conc. nitric acid. Dilute to 200 mL with ASTM type I water.

7.3.5 Cadmium solution, stock, 1 mL = 1000 μg Cd: Pickle Cd metal in (1+9) nitric acid to an exact weight of 0.100 g. Dissolve in 5 mL (1+1) nitric acid, heating to effect solution. Cool and dilute to 100 mL with ASTM type I water.

7.3.6 Chromium solution, stock, 1 mL = 1000 μg Cr: Dissolve 0.1923g CrO_3 in a solution mixture of 10 mL ASTM type I water and 1 mL conc. nitric acid. Dilute to 100 mL with ASTM type I water.

7.3.7 Cobalt solution, stock 1 mL = 1000 μg Co: Pickle Co metal in (1+9) nitric acid to an exact weight of 0.100 g. Dissolve in 5 mL (1+1) nitric acid, heating to effect solution. Cool and dilute to 100 mL with ASTM type I water.

7.3.8 Copper solution, stock, 1 mL = 1000 μg Cu: Pickle Cu metal in (1+9) nitric acid to an exact weight of 0.100 g. Dissolve in 5 mL (1+1) nitric acid, heating to effect solution. Cool and dilute to 100 mL with ASTM type I water.

7.3.9 Iron solution, stock, 1 mL = 1000 μg Fe: Pickle Fe metal in (1+9) hydrochloric acid to an exact weight of 0.100 g. Dissolve in 10 mL (1+1) hydrochloric acid, heating to effect solution. Cool and dilute to 100 mL with ASTM type I water.

7.3.10 Lead solution, stock, 1 mL = 1000 μg Pb: Dissolve 0.1599 g $PbNO_3$ in 5 mL (1+1) nitric acid. Dilute to 100 mL with ASTM type I water.

7.3.11 Manganese solution, stock, 1 mL = 1000 μg Mn: Pickle manganese flake in (1+9) nitric acid to an exact weight of 0.100 g. Dissolve in 5 mL (1+1) nitric acid, heating to effect solution. Cool and dilute to 100 mL with ASTM type I water.

7.3.12 Nickel solution, stock, 1 mL = 1000 μg Ni: Dissolve 0.100 g nickel powder in 5 mL conc. nitric acid, heating to effect solution. Cool and dilute to 100 mL with ASTM type I water.

7.3.13 Selenium solution, stock, 1 mL = 1000 μg Se: Dissolve 0.1405 g SeO_2 in 20 mL ASTM type I water. Dilute to 100 mL with ASTM type I water.

7.3.14 Silver solution, stock, 1 mL = 1000 μg Ag: Dissolve 0.100 g silver metal in 5 mL (1+1) nitric acid, heating to effect solution. Cool and dilute to 100 mL with ASTM type I water. Store in amber container.

7.3.15 Thallium solution, stock 1 mL = 500 μg Tl: Dissolve 0.1303 g $TlNO_3$ in a solution mixture of 10 mL ASTM type I water and 2 mL conc. nitric acid. Dilute to 200 mL with ASTM type I water.

7.3.16 Tin solution, stock, 1 mL = 1000 μg Sn: Dissolve 0.100 g Sn shot in 20 mL (1+1) hydrochloric acid, heating to effect solution. Cool and dilute to 100 mL with (1+1) hydrochloric acid.

7.3.17 Zinc solution, stock, 1 mL = 1000 μg Zn: Pickle zinc metal in (1+9) nitric acid to an exact weight of 0.100 g. Dissolve in 5 mL (1+1) nitric acid, heating to effect solution. Cool and dilute to 100 mL with ASTM type I water.

7.4 PREPARATION OF CALIBRATION STANDARDS - Fresh calibration standards (CAL Solution) should be prepared every two weeks or as needed. Dilute each of the stock standard solutions to levels appropriate to the operating range of the instrument using the appropriate acid diluent (see note). The element concentrations in each CAL solution should be sufficiently high to produce good measurement precision and to accurately define the slope of the response curve. The instrument calibration should be initially verified using a quality control sample (Sect. 7.6).

NOTE: The appropriate acid diluent for dissolved elements in water samples is 1% HNO_3. For total recoverable elements in waters the appropriate acid diluent is 2% HNO_3 and 1% HCl. Finally, the appropriate acid diluent for total recoverable elements in solid samples is 2% HNO_3 and 2% HCl. The reason for these different diluents is to match the types of acids and the acid concentrations of the samples with the acid present in the standards and blanks.

7.5 BLANKS - Two types of blanks are required for this method. A <u>calibration blank</u> is used to establish the analytical calibration curve and the laboratory <u>reagent blank</u> (LRB) is used to assess possible contamination from the sample preparation procedure and to

assess spectral background. All diluent acids should be made from concentrated acids (Sects. 7.1.1, 7.1.4) and ASTM type I water.

7.5.1 Calibration blank - Consists of the appropriate acid diluent (Sect. 7.4 note) (HCl/HNO_3) in ASTM type I water.

7.5.2 Laboratory reagent blank (preparation blank) must contain all the reagents in the same volumes as used in processing the samples. The preparation blank must be carried through the entire sample digestion and preparation scheme.

7.6 QUALITY CONTROL SAMPLE - Quality control samples are available from various sources. Dilute (with the appropriate acid (HCl/HNO_3) blank solution) an appropriate aliquot of analyte such that the resulting solution will result in an absorbance of approximately 0.1.

7.7 LABORATORY FORTIFIED BLANK - To an aliquot of laboratory reagent blank, add an aliquot of the stock standard to provide a final concentration which will produce an absorbance of approximately 0.1 for the analyte. The fortified blank must be carried through the entire sample digestion and preparation scheme.

8. SAMPLE COLLECTION, PRESERVATION AND STORAGE

8.1 Prior to sample collection, consideration should be given to the type of data required so that appropriate preservation and pretreatment steps can be taken. Filtration, acid preservation etc. should be performed at the time of sample collection or as soon thereafter as practically possible.

8.2 For the determination of dissolved elements, the sample should be filtered through a 0.45-μm membrane filter. Use a portion of the sample to rinse the filter assembly, discard and then collect the required volume of filtrate. Acidify the filtrate with (1+1) nitric acid immediately following filtration to a pH of less than two.

8.3 For the determination of total recoverable elements in aqueous samples, acidify with (1+1) nitric acid at the time of collection to a pH of less than two. The sample should not be filtered prior to analysis.

> **NOTE:** Samples that cannot be acid preserved at the time of collection because of sampling limitations or transport restrictions, should be acidified with nitric acid to pH <2 upon receipt in the laboratory (normally, 3 mL of (1+1) nitric acid per liter of sample is sufficient for most ambient and drinking water samples). Following acidification, the sample should be held for a minimum of 16 h before withdrawing an aliquot for sample processing.

8.4 Solid samples usually require no preservation prior to analysis other than storage at 4°C.

9. CALIBRATION AND STANDARDIZATION

9.1 CALIBRATION - Demonstration and documentation of acceptable initial calibration is required before any samples are analyzed and is required periodically throughout sample analysis as dictated by results of continuing calibration checks. After initial calibration is successful, a calibration check is required at the beginning and end of each period during which analyses are performed.

9.1.1 Initiate proper operating configuration of instrument and data system. Allow a period of not less than 30 min for the instrument to warm up if an EDL is to be used.

9.1.2 Instrument stability must be demonstrated by analyzing a standard solution of a concentration 20 times the IDL a minimum of five times with the resulting relative standard deviation of absorbance signals less than 5%.

9.1.3 Initial calibration. The instrument must be calibrated for the analyte to be determined using the calibration blank (Sect. 7.5.1) and calibration standards prepared at three or more concentration levels within the linear dynamic range of the analyte.

9.2 INSTRUMENT PERFORMANCE - Check the performance of the instrument and verify the calibration using data gathered from analyses of calibration blanks, calibration standards and the quality control sample.

9.2.1 After the calibration has been established, it must be initially verified for the analyte by analyzing the QCS (Sect. 7.6). If measurements exceed ± 10% of the established QCS value, the analysis should be terminated, the source of the problem identified and corrected, the instrument recalibrated, and the new calibration must be verified before continuing analyses.

9.2.2 To verify that the instrument is properly calibrated on a continuing basis, analyze the calibration blank and an intermediate concentration calibration standard as surrogate samples after every ten analyses. The results of the analyses of the standard will indicate whether the calibration remains valid. If the indicated concentration of any analyte deviates from the true concentration by more than 10%, the instrument must be recalibrated and the response of the QCS checked as in Sect. 9.2.1. After the QCS sample has met specifications, the previous ten samples must be reanalyzed in groups of five with an intermediate

concentration calibration standard analyzed after every fifth sample. If the intermediate concentration calibration standard is found to deviate by more than 10%, the analyst is instructed to identify the source of instrumental drift.

NOTE: If the sample matrix is responsible for the calibration drift and/or the sample matrix is affecting analyte response, it may be necessary to perform standard additions in order to assess an analyte concentration (Sect. 11.5).

10. QUALITY CONTROL (QC)

10.1 FORMAL QUALITY CONTROL- The minimum requirements of this QC program consist of an initial demonstration of laboratory capability, and the analysis of laboratory reagent blanks and fortified blanks and samples as a continuing check on performance. The laboratory is required to maintain performance records that define the quality of the data thus generated.

10.2 INITIAL DEMONSTRATION OF PERFORMANCE

10.2.1 The initial demonstration of performance is used to characterize instrument performance (MDLs and linear calibration ranges) for analyses conducted by this method.

10.2.2 Method detection limits (MDL) - The method detection limit should be established for the analyte, using reagent water (blank) fortified at a concentration of two to five times the estimated detection limit[3]. To determine MDL values, take seven replicate aliquots of the fortified reagent water and process through the entire analytical method. Perform all calculations defined in the method and report the concentration values in the appropriate units. Calculate the MDL as follows:

$$MDL = (t) \times (S)$$

where, t = Student's t value for a 99% confidence level and a standard deviation estimate with n-1 degrees of freedom [t = 3.14 for seven replicates],

S = standard deviation of the replicate analyses.

Method detection limits should be determined every six months or whenever a significant change in background or instrument response is expected.

10.2.3 Linear calibration ranges - Linear calibration ranges are metal dependent. The upper limit of the linear calibration range should be established by determining the signal responses from a minimum of four different concentration

standards, one of which is close to the upper limit of the linear range. The linear calibration range which may be used for the analysis of samples should be judged by the analyst from the resulting data. Linear calibration ranges should be determined every six months or whenever a significant change in instrument response maybe expected.

10.3 ASSESSING LABORATORY PERFORMANCE - REAGENT AND FORTIFIED BLANKS

10.3.1 Laboratory reagent blank (LRB) - The laboratory must analyze at least one LRB (Sect. 7.5.2) with each set of samples. Reagent blank data are used to assess contamination from the laboratory environment and to characterize spectral background from the reagents used in sample processing. If an analyte value in the reagent blank exceeds its determined MDL, then laboratory or reagent contamination should be suspected. Any determined source of contamination should be corrected and the samples reanalyzed.

10.3.2 Laboratory fortified blank (LFB) - The laboratory must analyze at least one LFB (Sect. 7.7) with each set of samples. Calculate accuracy as percent recovery (Sect. 10.4.2). If the recovery of any analyte falls outside the control limits (Sect. 10.3.3), that analyte is judged out of control, and the source of the problem should be identified and resolved before continuing analyses.

10.3.3 Until sufficient data (usually a minimum of 20 to 30 analyses) become available, a laboratory should assess laboratory performance against recovery limits of 80-120%. When sufficient internal performance data become available, develop control limits from the percent mean recovery (x) and the standard deviation (S) of the mean recovery. These data are used to establish upper and lower control limits as follows:

$$\text{UPPER CONTROL LIMIT} = x + 3S$$
$$\text{LOWER CONTROL LIMIT} = x - 3S$$

After each 5-10 new recovery measurements, new control limits should be calculated using only the most recent 20 to 30 data points.

NOTE: Antimony and Aluminum do manifest relatively low percent recoveries (see Table 1A, NBS River Sediment 1645).

10.4 ASSESSING ANALYTE RECOVERY - LABORATORY FORTIFIED SAMPLE MATRIX

10.4.1 The laboratory must fortify a minimum of 10% of the samples or one fortified sample per set, whichever is greater. Ideally for solid samples, the concentration added should be approximately equal to 0.1 abs units after the solution has

been diluted. In other words if the sample (after dilution) results in an absorbance of 0.05, ideally the laboratory fortified sample will result in an absorbance of 0.150 (after dilution). Over time, samples from all routine sample sources should be fortified.

10.4.2 Calculate the percent recovery for the analyte, corrected for background concentrations measured in the unfortified sample, and compare these values to the control limits established in Sect. 10.3.3 for the analyses of LFBs. Fortified recovery calculations are not required if the fortified concentration is less than 10% of the sample background concentration. Percent recovery may be calculated in units appropriate to the matrix, using the following equation:

$$R = \frac{(Cs - C)}{S} \times 100$$

where,

R = percent recovery.
Cs = fortified sample concentration.
C = sample background concentration.
S = concentration equivalent of the fortified sample.

10.4.3 If the recovery of the analyte on the fortified sample falls outside the designated range, and the laboratory performance on the LFB for the analyte is shown to be in control (Sect. 10.3) the recovery problem encountered with the fortified sample is judged to be matrix related (Sect. 4), not system related. The data obtained for that analyte should be verified with the methods of standard additions (Sect. 11.5).

10.5 QUALITY CONTROL SAMPLES (QCS) - Each quarter, the laboratory should analyze one or more QCS (if available). If criteria provided with the QCS are not met, corrective action should be taken and documented.

11. PROCEDURE

11.1 SAMPLE PREPARATION - DISSOLVED ELEMENTS

11.1.1 For the determination of dissolved elements in drinking water, wastewater, ground and surface waters, take a 100-mL (± 1mL) aliquot of the filtered acid preserved sample, and add 1 mL of concentrated nitric acid. The sample is now ready for analysis. Allowance should be made in the calculations for the appropriate dilution factors.

NOTE: If a precipitate is formed during acidification, transport or storage, the sample aliquot must be treated using the procedure in Sect. 11.2.1 prior to analysis.

11.2 SAMPLE PREPARATION - TOTAL RECOVERABLE ELEMENTS.

11.2.1 For the determination of total recoverable elements in water or waste water, take a 100-mL (± 1 mL) aliquot from a well mixed, acid preserved sample and transfer it to a 250-mL Griffin beaker. Add 1 mL of concentrated HNO_3 and 0.5 mL of concentrated HCl. Heat the sample on a hot plate at 85°C until the volume has been reduced to approximately 20 mL, ensuring that the sample does not boil. (A spare beaker containing 20 mL of water can be used as a gauge.)

NOTE: For proper heating adjust the temperature control of the hot plate such that an uncovered beaker containing 50 mL of water located in the center of the hot plate can be maintained at approximately but no higher than 85°C. Evaporation time for 100 mL of sample at 85°C is approximately 2 h with the rate of evaporation rapidly increasing as the sample volume approaches 20 mL.

Cover the beaker with a watch glass and reflux for 30 min. Slight boiling may occur but vigorous boiling should be avoided. Allow to cool and quantitatively transfer to either a 50-mL volumetric or a 50-mL class A stoppered graduated cylinder. Dilute to volume with ASTM type I water and mix. Centrifuge the sample or allow to stand overnight to separate insoluble material. The sample is now ready for analysis. Prior to the analysis of samples the calibration standards must be analyzed and the calibration verified using a QC sample (Sect. 9). Once the calibration has been verified, the instrument is ready for sample analysis. Because the effects of various matrices on the stability of diluted samples cannot be characterized, samples should be analyzed as soon as possible after preparation.

11.2.2 For the determination of total recoverable elements in solid samples (sludge, soils, and sediments), mix the sample thoroughly to achieve homogeneity and weigh accurately a 1.0 ± 0.01 g portion of the sample. Transfer to a 250-mL Phillips beaker. Add 4 mL (1+1) nitric acid and 10 mL (1+4) HCl. Cover with a watch glass. Heat the sample on a hot plate and gently reflux for 30 min. Very slight boiling may occur, however, vigorous boiling must be avoided to prevent the loss of the HCl azeotrope.

NOTE: For proper heating adjust the temperature control of the hot plate such that an uncovered Griffin beaker containing 50 mL of water located in the center of the hot plate can be maintained at a temperature approximately but no higher than 85°C.

Allow the sample to cool and quantitatively transfer to either 100-mL (± 1 mL) volumetric flask or a 100-mL class A stoppered graduate cylinder. Dilute to volume with ASTM type I water and mix. Centrifuge the sample or allow to stand overnight to separate insoluble material. The sample is now ready for analysis. Prior to the analysis of samples the calibration standards must be analyzed and the calibration verified using a QC sample (Sect. 9). Once the calibration has been verified, the instrument is ready for sample analysis. Because the effects of various matrices on the stability of diluted samples cannot be characterized, samples should be analyzed as soon as possible after preparation.

NOTE: Determine the percent solids in the sample for use in calculations and for reporting data on a dry weight basis.

11.2.3 Appropriate digestion procedures for biological tissues should be utilized prior to sample analysis.

11.3 For every new or unusual matrix, it is highly recommended that an inductively coupled plasma atomic emission spectrometer be used to screen for high element concentrations. Information gained from this may be used to prevent potential damage of the instrument and better estimate which elements may require analysis by graphite furnace.

11.4 Samples having concentrations higher than the established linear dynamic range should be diluted into range and reanalyzed. If methods of standard additions are required, follow the instructions in Sect. 11.5.

11.5 STANDARD ADDITIONS - If methods of standard addition are required, the following procedure is recommended.

11.5.1 The standard addition technique[4] involves preparing new standards in the sample matrix by adding known amounts of standard to one or more aliquots of the processed sample solution. This technique compensates for a sample constituent that enhances or depresses the analyte signal thus producing a different slope from that of the calibration standards. It will not correct for additive interference which causes a baseline shift. The simplest version of this technique is the single-addition method. The procedure is as follows. Two identical aliquots of the sample solution,

each of volume V_x, are taken. To the first (labeled A) is added a small volume V_s of a standard analyte solution of concentration c_s. To the second (labeled B) is added the same volume V_s of the solvent. The analytical signals of A and B are measured and corrected for nonanalyte signals. The unknown sample concentration c_x is calculated:

$$c_x = \frac{S_B V_s c_s}{(S_A - S_B) V_x}$$

where S_A and S_B are the analytical signals (corrected for the blank) of solutions A and B, respectively. V_s and c_s should be chosen so that S_A is roughly twice S_B on the average. It is best if V_s is made much less than V_x, and thus c_s is much greater than c_x, to avoid excess dilution of the sample matrix. If a separation or concentration step is used, the additions are best made first and carried through the entire procedure. For the results from this technique to be valid, the following limitations must be taken into consideration:

1. The analytical curve must be linear.

2. The chemical form of the analyte added must respond the same as the analyte in the sample.

3. The interference effect must be constant over the working range of concern.

4. The signal must be corrected for any additive interference.

12. CALCULATIONS

12.1 Do not report element concentrations below the determined MDL.

12.2 For aqueous samples prepared by total recoverable procedure (Sect. 11.2.1), multiply solution concentrations by the appropriate dilution factor. Round the data to the tenths place and report the data in µg/L with up to three significant figures.

12.3 For solid samples prepared by total recoverable procedure (Sect. 11.2.2) round the solution concentration (µg/L in the analysis solution) to the tenths place and multiply by the dilution factor. Data should be reported to a tenth mg/kg up to three significant figures taking into account the percent solids if the data are reported on a dry weight* basis.

* The dry weight should be determined on a separate sample aliquot if the sample is available. The dry weight can be determined by transferring a uniform 1-g aliquot to an evaporating dish and drying the sample to a constant weight at 103-105°C.

12.4 If additional dilutions were performed, the appropriate dilution factor must be applied to sample values.

12.5 The QC data obtained during the analyses provide an indication of the quality of the sample data and should be provided with the sample results.

13. PRECISION AND ACCURACY

13.1 Instrument operating conditions used for single laboratory testing of the method and MDLs are listed in Table 2.

13.2 Data obtained from single laboratory testing of the method are summarized in Table 1A-C for three solid samples consisting of SRM 1645 River Sediment, EPA Hazardous Soil and EPA Electroplating Sludge. Samples were prepared using the procedure described in Sect. 11.2.2. For each matrix, five replicates were analyzed and an average of the replicates used for determining the sample background concentration. Two further pairs of duplicates were fortified at different concentration levels. The sample background concentration, mean spike percent recovery, the standard deviation of the average percent recovery and the relative percent difference between the duplicate fortified determinations are listed in Table 1A-C. In addition, Table 1D-F contains a single laboratory testing of the method in aqueous media including drinking water, pond water and well water. Samples were prepared using the procedure described in Sect. 11.2.1. For each aqueous matrix, five replicates were analyzed and an average of the replicates used for determining the sample background concentration. Four samples were fortified at the levels reported in Table 1D-1F. A percent relative standard deviation is reported in Table 1D-1F for the fortified samples. An average percent recovery is also reported in Tables 1D-F.

14. REFERENCES

1. "OSHA Safety and Health Standards, General Industry," (29CFR 1910), Occupational Safety and Health Administration, OSHA 2206, revised January, 1976.

2. "Proposed OSHA Safety and Health Standards, Laboratories," Occupational Safety and Health Administration, Federal Register, July 24, 1986.

3. Code of Federal Regulations 40, Ch. 1, Pt. 136, Appendix B.

4. Winefordner, J.D., "Trace Analysis: Spectroscopic Methods for Elements," Chemical Analysis, Vol. 46, pp. 41-42.

5. Waltz, B., G. Schlemmar and J. R. Mudakavi, JAAS, 1988, 3, 695.

TABLE 1A. PRECISION AND RECOVERY DATA FOR NBS RIVER SEDIMENT 1645

Solid Sample	Certified Value+	Average Sed Conc (mg/kg)	% RSD	Average Percent Recovery (20 mg/kg)x	S(r)	RPD	Average Percent Recovery (100mg/kg)x	S(r)	RPD
Aluminum	22600	6810	4.6	*	-	-	*	-	-
Antimony	(51)	25.8	8.2	74.9	8.3	9.5	99.0	1.5	2.7
Arsenic	(66)	69.2	3.4	69.8	19.0	12.0	89.2	4.3	7.3
Cadmium	10.2	10.8	3.7	115.3	2.6	4.0	110.7	0.7	1.7
Chromium	29600	32800	1.6	*	-	-	*	-	-
Copper	109	132	4.8	99.1	14.2	0	111.5	3.6	2.6
Manganese	785	893	5.1	*	-	-	103.2	26.4	4.7
Selenium	1.5	0.7	20.4	96.0	15.9	45.2	105.4	4.0	10.7
Silver	--	1.7	3.1	101.8	3.8	9.7	93.5	1.9	5.6
Tin	--	439	4.4	-	-	-	-	-	-

% RSD Percent Relative Standard Deviation (n = 5)
S(r) Standard Deviation of Average Percent Recovery
RPD Relative Percent Difference Between Duplicate Recovery Determinations

* Fortified concentration < 10% of sample concentration
\- Not Determined
\+ Values in parenthesis are noncertified
x Fortified concentration

TABLE 1B. PRECISION AND RECOVERY DATA FOR EPA HAZARDOUS SOIL 884

Solid Sample	Average Sed Conc (mg/kg)	%RSD	Average Percent Recovery (20 mg/kg) x	S(r)	RPD	Average Percent Recovery (100mg/kg) x	S(r)	RPD
Aluminum	6410	3.3	*	-	-	*	-	-
Antimony	4.6	14.7	61.4	2.7	7.4	60.9	1.7	7.1
Arsenic	8.7	4.6	109.8	2.1	3.5	103.7	1.5	3.6
Cadmium	1.8	10.3	115.4	0.8	1.4	99.0	4.3	12.1
Chromium	84.0	4.2	95.5	33.8	17.9	120.8	6.6	8.9
Copper	127	4.3	108.0	15.2	2.6	117.7	5.4	5.7
Manganese	453	6.0	*	-	-	99.2	13.9	1.6
Selenium	0.6	7.5	95.0	8.4	24.1	96.9	3.3	9.7
Silver	0.9	18.5	100.1	3.8	10.2	93.5	1.3	3.8
Tin	18.4	3.7	-	-	-	-	-	-

% RSD Percent Relative Standard Deviation (n = 5)
S(r) Standard Deviation of Average Percent Recovery
RPD Relative Percent Difference Between Duplicate Recovery Determinations

* Fortified concentration < 10% of sample concentration
\- Not Determined
x Fortified concentration

TABLE 1C. PRECISION AND RECOVERY DATA FOR EPA ELECTROPLATING SLUDGE 286

Solid Sample	Average Sed Conc (mg/kg)	%RSD	Average Percent Recovery (20 mg/kg) x	S(r)	RPD	Average Percent Recovery (100mg/kg) x	S(r)	RPD
Aluminum	6590	2.7	*	-	-	*	-	-
Antimony	7.7	3.9	68.6	2.3	5.7	60.7	3.1	12.8
Arsenic	33.7	2.7	87.6	2.6	1.7	100.2	1.5	3.1
Cadmium	119	1.3	81.9	7.9	3.0	112.5	3.9	4.7
Chromium	8070	4.5	*	-	-	*	-	-
Copper	887	1.6	*	-	-	99.5	21.9	6.0
Manganese	320	1.6	*	-	-	101.0	6.4	4.0
Selenium	0.8	6.7	99.4	0.8	2.3	96.8	0.7	1.9
Silver	6.5	2.3	102.8	2.5	5.3	92.3	1.9	5.4
Tin	21.8	3.2	-	-	-	-	-	-

% RSD Percent Relative Standard Deviation (n = 5)
S(r) Standard Deviation of Average Percent Recovery
RPD Relative Percent Difference Between Duplicate Recovery Determinations

* Fortified concentration < 10% of sample concentration
\- Not Determined
x Fortified concentration

TABLE 1D PRECISION AND RECOVERY DATA FOR POND WATER

Element	Average Conc. µg/L	%RSD	Fortified Conc. µg/L[1]	%RSD at Fortified Conc.[2]	Average Percent Recovery
Ag	< 0.5	*	1.25	3.7	107.5
Al	550	1.2	-	-	-
As[3]	3.2	4.1	10	0.8	100.5
Be	0.05	36.4	2.5	14.0	90.0
Cd	< 0.05	*	0.5	4.5	99.1
Co	< 0.7	*	10	2.8	97.3
Cr	0.75	8.7	2.5	1.8	98.5
Cu	2.98	11.2	10	2.9	101.9
Fe	773	5.7	-	-	-
Mn	751	2.2	-	-	-
Ni	2.11	6.8	20	1.6	105.6
Pb	1.24	20.5	25	1.8	101.6
Sb[3]	< 0.8	*	25	0.4	115.2
Se[3]	< 0.6	*	25	1.6	97.8
Sn[3]	< 1.7	*	50	3.3	117.5
Tl	< 0.7	75.0	50	5.2	101.0

< Sample Concentration Less Than The Established Method Detection Limit.

* Not Determined on Sample Concentrations Less Than the Method Detection Limit.

1 Fortified Sample Concentration based on 100 mL Sample Volumes.

2 RSD are Reported on 50 mL Sample Volumes.

3 Electrodeless Discharge Lamps were used.

TABLE 1E PRECISION AND RECOVERY DATA FOR DRINKING WATER

Element	Average Conc. µg/L	%RSD	Fortified Conc[1] µg/L	%RSD at Fortified Conc[2]	Average Percent Recovery
Ag	< 0.5	*	1.25	5.6	94.6
Al[3]	163.6	2.5	150	6.4	111.7
As[3]	0.5	10.5	10	0.6	88.4
Be	< 0.02	*	2.5	9.4	106.0
Cd	< 0.05	*	0.5	6.3	105.2
Co	< 0.7	*	10	3.9	88.5
Cr	< 0.1	*	2.5	3.1	105.7
Cu	2.6	7.3	10	1.2	111.5
Fe	9.1	17.6	150	5.9	107.8
Mn	0.9	1.3	2.5	0.7	96.7
Ni	0.8	32.7	20	4.3	103.8
Pb[3]	< 0.7	*	10	4.0	101.8
Sb[3]	< 0.8	*	15	14.7	101.4
Se[3]	< 0.6	*	25	1.5	88.9
Sn[3]	< 1.7	*	50	0.4	100.7
Tl	< 0.7	*	20	2.8	95.4

< Sample Concentration Less Than The Established Method Detection Limit.

* Not Determined on Sample Concentration Less Than the Method Detection Limit.

1 Fortified Sample Concentrations based on 100 mL Sample Volumes.

2 RSD Reported on 50 mL Sample Volumes.

3 Electrodeless Discharge Lamps were used.

TABLE 1F PRECISION AND RECOVERY DATA FOR WELL WATER

Element	Average Conc. µg/L	%RSD	Fortified Conc. µg/L[1]	%RSD at Fortified Conc.[2]	Average Percent Recovery
Ag	< 0.5	*	1.25	3.6	108.3
Al	14.4	26.7	150	1.5	97.1
As[3]	0.9	14.2	10	2.1	101.6
Be	< 0.02	*	2.5	3.4	103.7
Cd	1.8	11.9	0.5	4.6	109.3
Co	4.0	2.9	10	1.0	95.8
Cr	< 0.1	*	2.5	4.0	102.6
Cu	35.9	1.2	10	0.6	90.2
Fe	441	6.6	-	-	-
Mn	3580	2.7	-	-	-
Ni	11.8	3.2	20	4.0	105.7
Pb	< 0.7	*	25	0.7	102.2
Sb[3]	< 0.8	*	25	1.2	114.3
Se[3]	< 0.6	*	25	1.2	95.9
Sn[3]	< 1.7	*	50	3.0	106.1
Tl	< 0.7	*	50	1.4	98.0

< Sample Concentration Less Than The Established Method Detection Limit.

* Not Determined on Sample Concentration Less Than the Method Detection Limit.

1 Fortified Sample Concentration based on 100 mL Sample Volume.

2 RSD Reported on 50 mL Sample Volume.

3 Electrodeless Discharge Lamps were used.

TABLE 2. RECOMMENDED GRAPHITE FURNACE OPERATING CONDITIONS AND RECOMMENDED MATRIX MODIFIER [1-3]

Element	Wave-length	Slit	Temperature (C)[5] Char	Atom.	MDL[4] (μg/L)
Ag	328.1	0.7	1000	1800	0.5[9]
Al	309.3	0.7	1700	2600	7.8[9]
As[7]	193.7	0.7	1300	2200	0.5
Be	234.9	0.7	1200	2500	0.02
Cd	228.8	0.7	800	1600	0.05
Co	242.5	0.2	1400	2500	0.7
Cr	357.9	0.7	1650	2600[6]	0.1
Cu	324.8	0.7	1300	2600[6]	0.7
Fe	248.3	0.2	1400	2400	
Mn	279.5	0.2	1400	2200	0.3
Ni	232.0	0.2	1400	2500	0.6
Pb	283.3	0.7	1250	2000	0.7
Sb[7]	217.6	0.7	1100	2000	0.8
Se[7]	196.0	2.0	1000	2000	0.6
Sn[7]	286.3	0.7	1400[8]	2300	1.7
Tl	276.8	0.7	1000	1600	0.7
Zn	213.9	0.7	700	1800	0.3

1) Matrix Modifier = 0.015 mg Pd + 0.01 mg $Mg(NO_3)_2$.

2) A 5% H_2 in Ar gas mix is used during the dry and char steps at 300 mL/min for all elements.

3) A cool down step between the char and atomization is recommended.

4) Obtained using a 20 μL sample size and stop flow atomization.

5) Actual char and atomization temperatures may vary from instrument to instrument and are best determined on an individual basis. The actual drying temperature may vary depending on the temperature of the water used to cool the furnace.

6) A 7 second atomization is necessary to quantitatively remove the analyte from the graphite furnace.

7) An electrodeless discharge lamp was used for this element.

8) An additional low temperature (approximately 200°C) prechar is recommended.

9) Pd modifier was determined to have trace level contamination of this element.

Method 200.10

DETERMINATION OF TRACE ELEMENTS IN MARINE WATERS BY ON-LINE CHELATION PRECONCENTRATION AND INDUCTIVELY COUPLED PLASMA - MASS SPECTROMETRY

Stephen E. Long
Technology Applications, Inc.

and

Theodore D. Martin
Inorganic Chemistry Branch
Chemistry Research Division

Revision 1.4
April 1991

ENVIRONMENTAL MONITORING SYSTEMS LABORATORY
OFFICE OF RESEARCH AND DEVELOPMENT
U.S. ENVIRONMENTAL PROTECTION AGENCY
CINCINNATI, OHIO 45268

METHOD 200.10

DETERMINATION OF TRACE ELEMENTS IN MARINE WATERS BY ON-LINE CHELATION PRECONCENTRATION AND INDUCTIVELY COUPLED PLASMA - MASS SPECTROMETRY

1. SCOPE AND APPLICATION

1.1 This method describes procedures for preconcentration and determination of total recoverable trace elements in marine waters, including estuarine water, seawater and brines.

1.2 Acid solubilization is required prior to the determination of total recoverable elements to facilitate breakdown of complexes or colloids which might influence trace element recoveries. This method should only be used for preconcentration and determination of trace elements in aqueous samples.

1.3 This method is applicable to the following elements:

Element		Chemical Abstract Services Registry Numbers (CASRN)
Cadmium	(Cd)	7440-43-9
Cobalt	(Co)	7440-48-4
Copper	(Cu)	7440-50-8
Lead	(Pb)	7439-92-1
Nickel	(Ni)	7440-02-0
Uranium	(U)	7440-61-1
Vanadium	(V)	7440-62-2

1.4 Method detection limits (MDLs) for these elements will be dependent on the specific instrumentation employed and the selected operating conditions. However, the MDLs should be essentially independent of the matrix because elimination of the matrix is a feature of the method. MDLs in reagent water, which were determined using the procedure described in Sect. 10.2.2, are listed in Table 1.

1.5 A minimum of six months experience in the use of commercial instrumentation for inductively coupled plasma mass spectrometry (ICP-MS) is recommended. Specific information regarding the use of ICP-MS for the determination of trace elements may be found in USEPA Method 200.8[1]

2. SUMMARY OF METHOD

2.1 This method is used to preconcentrate trace elements using an iminodiacetate functionalized chelating resin[2,3]. Following acid solubilization, the sample is buffered prior to chelating column

entry using an on-line system. Group I and II metals, as well as most anions, are selectively separated from the analytes by elution with ammonium acetate at pH 5.5. The analytes are subsequently eluted into a simplified matrix consisting of dilute nitric acid and are determined by ICP-MS using a directly coupled on-line configuration.

3. DEFINITIONS

3.1 TOTAL RECOVERABLE - The concentration of analyte determined on an unfiltered sample following treatment with hot dilute mineral acid.

3.2 METHOD DETECTION LIMIT (MDL) - The minimum concentration of an analyte that can be identified, measured and reported with 99% confidence that the analyte concentration is greater than zero.

3.3 LINEAR DYNAMIC RANGE (LDR) - The concentration range over which the analytical working curve remains linear.

3.4 LABORATORY REAGENT BLANK (LRB) (preparation blank) - An aliquot of reagent water that is treated exactly as a sample including exposure to all labware, equipment, solvents, reagents, and internal standards that are used with other samples. The LRB is used to determine if method analytes or other interferences are present in the laboratory environment, reagents or apparatus.

3.5 CALIBRATION BLANK - A volume of ASTM type I water acidified with the same acid matrix as is present in the calibration standards.

3.6 INTERNAL STANDARD - Pure analyte(s) added to a solution in known amount(s) and used to measure the relative responses of other method analytes that are components of the same solution. The internal standard must be an analyte that is not a sample component.

3.7 STOCK STANDARD SOLUTION - A concentrated solution containing one or more analytes prepared in the laboratory using assayed reference compounds or purchased from a reputable commercial source.

3.8 CALIBRATION STANDARD (CAL) - A solution prepared from the stock standard solution(s) which is used to calibrate the instrument response with respect to analyte concentration.

3.9 TUNING SOLUTION - A solution which is used to determine acceptable instrument performance prior to calibration and sample analyses.

3.10 LABORATORY FORTIFIED BLANK (LFB) - An aliquot of reagent water to which known quantities of the method analytes are added in the laboratory. The LFB is analyzed exactly like a sample, and its purpose is to determine whether the method is within accepted control limits.

3.11 LABORATORY FORTIFIED SAMPLE MATRIX (LFM) - An aliquot of an environmental sample to which known quantities of the method analytes are added in the laboratory. The LFM is analyzed exactlylike a sample, and its purpose is to determine whether the sample matrix contributes bias to the analytical results. The background concentrations of the analytes in the sample matrix must be determined in a separate aliquot and the measured values in the LFM corrected for the concentrations found.

3.12 QUALITY CONTROL SAMPLE (QCS) - A solution containing known concentrations of method analytes which is used to fortify an aliquot of LRB matrix. The QCS is obtained from a source external to the laboratory and is used to check laboratory performance.

4. INTERFERENCES

4.1 A discussion of interferences relating to the use of ICP-MS may be found in USEPA Method 200.8[1]. A principal advantage of this method is the selective elimination of species giving rise to polyatomic spectral interferences on certain transition metals (e.g. removal of the chloride interference on vanadium). As the majority of the sample matrix is removed, matrix induced physical interferences are also substantially reduced.

4.2 Low recoveries may be encountered in the preconcentration cycle if the trace elements are complexed by competing chelators in the sample or are present as colloidal material. Acid solubilization pretreatment is employed to improve analyte recovery and to minimize adsorption, hydrolysis and precipitation effects.

4.3 Memory interferences from the chelating system may be encountered especially after analyzing a sample containing high concentrations of the analytes. A thorough column rinsing sequence following elution of the analytes is necessary to minimize such interferences.

5. SAFETY

5.1 Each chemical reagent used in this method should be regarded as a potential health hazard and exposure to these reagents should be as low as reasonably achievable. Each laboratory is responsible for maintaining a current awareness file of OSHA regulations regarding the safe handling of the chemicals specified in this method[4,5]. A reference file of material data handling sheets should also be available to all personnel involved in the chemical analysis.

5.2 Analytical plasma sources emit radiofrequency radiation in addition to intense UV radiation. Suitable precautions should be taken to protect personnel from such hazards.

6. APPARATUS AND EQUIPMENT

6.1 PRECONCENTRATION SYSTEM - System containing no metal parts in the analyte flow path, configured as shown in Figure 1.

6.1.1 Column - Macroporous iminodiacetate chelating resin (Dionex Metpac CC-1 or equivalent).

6.1.2 Sample loop - 10 mL loop constructed from narrow bore, high-pressure inert tubing, Tefzel ETFE (ethylene tetra-fluoroethylene) or equivalent.

6.1.3 Eluent pumping system (P1) - Programmable flow, high pressure pumping system, capable of delivering either one of two eluents at a pressure up to 2000 psi and a flow rate of 1-5 mL/min.

6.1.4 Auxiliary pumps - On line buffer pump (P2), piston pump (Dionex QIC pump or equivalent) for delivering 2M ammonium acetate buffer solution; carrier pump (P3), peristaltic pump (Gilson Minipuls or equivalent) for delivering 1% nitric acid carrier solution; sample pump (P4), peristaltic pump for loading sample loop.

6.1.5 Control valves - Inert double stack, pneumatically operated four-way slider valves with connectors.

6.1.5.1 Argon gas supply regulated at 80-100 psi.

6.1.6 Solution reservoirs - Inert containers, e.g. high density polyethylene (HDPE) for holding eluent and carrier reagents.

6.1.7 Tubing - High pressure, narrow bore, inert tubing (e.g. Tefzel ETFE or equivalent) for interconnection of pumps/valve assemblies and a minimum length for connection of the preconcentration system to the ICP-MS instrument.

6.2 INDUCTIVELY COUPLED PLASMA - MASS SPECTROMETER

6.2.1 Instrument capable of scanning the mass range 5-250 amu with a minimum resolution capability of 1 amu peak width at 5% peak height. Instrument may be fitted with a conventional or extended dynamic range detection system.

6.2.2 Argon gas supply (high-purity grade, 99.99%).

6.2.3 A mass-flow controller on the nebulizer gas supply is recommended. A water-cooled spray chamber may be of benefit in reducing some types of interferences (e.g., polyatomic oxide species).

6.2.4 Operating conditions - Because of the diversity of instrument hardware, no detailed instrument operating conditions are provided. The analyst is advised to follow the recommended operating conditions provided by the manufacturer.

6.3 LABWARE - For the determination of trace elements, contamination and loss are of **critical** consideration. Potential contamination sources include improperly cleaned laboratory apparatus and general contamination within the laboratory environment. A clean laboratory work area, designated for trace element sample handling must be used. Sample containers can introduce positive and negative errors in the determination of trace elements by (1) contributing contaminants through surface desorption or leaching, (2) depleting element concentrations through adsorption processes. For these reasons, borosilicate glass is <u>not</u> recommended for use with this method. All labware in contact with the sample should be cleaned prior to use. Labware may be soaked overnight and thoroughly washed with laboratory-grade detergent and water, rinsed with water, and soaked for 4 h in a mixture of dilute nitric and hydrochloric acids, followed by rinsing with ASTM type I water and oven drying.

6.3.1 Griffin beakers, 250 mL, polytetrafluoroethylene (PTFE) or quartz.

6.3.2 Storage bottles - Narrow mouth bottles, Teflon FEP (fluorinated ethylene propylene), or HDPE, 125 mL and 250 mL capacities.

6.4 SAMPLE PROCESSING EQUIPMENT

6.4.1 Air displacement pipetter - Digital pipet system capable of delivering volumes from 10 to 2500 µL with an assortment of metal-free, disposable pipet tips.

6.4.2 Balances - Analytical balance, capable of accurately weighing to ± 0.1 mg; top pan balance, accurate to ± 0.01g.

6.4.3 Hot plate - Corning PC100 or equivalent.

6.4.4 Centrifuge - Steel cabinet with guard bowl, electric timer and brake.

6.4.5 Drying oven - Gravity convection oven with thermostatic control capable of maintaining 105°C ± 5°C.

6.4.6 pH meter - Bench mounted or hand-held electrode system with a resolution of ± 0.1 pH units.

7. REAGENTS AND CONSUMABLE MATERIALS

7.1 WATER - For all sample preparation and dilutions, ASTM type I water (ASTM D1193) is required.

7.2 Reagents may contain elemental impurities which might affect the integrity of analytical data. Owing to the high sensitivity of this method, ultra high-purity reagents must be used unless otherwise specified. To minimize contamination, reagents should be prepared directly in their designated containers where possible.

7.2.1 Acetic acid, glacial (sp. gr. 1.05).

7.2.2 Ammonium hydroxide (20%).

7.2.3 Ammonium acetate buffer 1M, pH 5.5 - Add 58 mL (60.5 g) of glacial acetic acid to 600 mL of ASTM type I water. Add 65 mL (60 g) of 20% ammonium hydroxide and mix. Check the pH of the resulting solution by withdrawing a small aliquot and testing with a calibrated pH meter, adjusting the solution to pH 5.5 ± 0.1 with small volumes of acetic acid or ammonium hydroxide as necessary. Cool and dilute to 1 L with ASTM type I water.

7.2.4 Ammonium acetate buffer 2M, pH 5.5 - Prepare as for Sect. 7.2.3 using 116 mL (121 g) glacial acetic acid and 130 mL (120 g) 20% ammonium hydroxide, diluted to 1000 mL with ASTM type I water.

NOTE: The ammonium acetate buffer solutions may be further purified by passing them through the chelating column at a flow rate of 5.0 mL/min. With reference to Figure 1, pump the buffer solution through the column using pump P1, with valves A and B off and valve C on. Collect the purified solution in a container at the waste outlet. Following this, elute the collected contaminants from the column using 1.25M nitric acid for 5 min at a flow rate of 4.0 mL/min.

7.2.5 Nitric acid, concentrated (sp.gr. 1.41).

7.2.5.1 Nitric acid 1.25M - Dilute 79 mL (112 g) conc. nitric acid to 1000 mL with ASTM type I water.

7.2.5.2 Nitric acid 1% - Dilute 10 mL conc. nitric acid to 1000 mL with ASTM type I water.

7.2.5.3 Nitric acid (1+1) - Dilute 500 mL conc. nitric acid to 1000 mL with ASTM type I water.

7.2.5.4 Nitric acid (1+9) - Dilute 100 mL conc. nitric acid to 1000 mL with ASTM type I water.

7.2.6 Oxalic acid dihydrate (CASRN 6153-56-6), 0.2M - Dissolve 25.2 g reagent grade $C_2H_2O_4.2H_2O$ in 250 mL ASTM type I water and dilute to 1000 mL with ASTM type I water. **CAUTION** - Oxalic acid is toxic, handle with care.

7.3 STANDARD STOCK SOLUTIONS - May be purchased from a reputable commercial source or prepared from ultra high-purity grade chemicals or metals (99.99 - 99.999% pure). All salts should be dried for one hour at 105°C, unless otherwise specified. (**CAUTION** - Many metal salts are extremely toxic if inhaled or swallowed. Wash hands thoroughly after handling). Stock solutions should be stored in plastic bottles. The following procedures may be used for preparing standard stock solutions:

NOTE: Some metals, particularly those which form surface oxides require cleaning prior to being weighed. This may be achieved by pickling the surface of the metal in acid. An amount in excess of the desired weight should be pickled repeatedly, rinsed with water, dried and weighed until the desired weight is achieved.

7.3.1 Cadmium solution, stock 1 mL = 1000 μg Cd: Pickle cadmium metal in (1+9) nitric acid to an exact weight of 0.100 g. Dissolve in 5 mL (1+1) nitric acid, heating to effect solution. Cool and dilute to 100 mL with ASTM type I water.

7.3.2 Cobalt solution, stock 1 mL = 1000 μg Co: Pickle cobalt metal in (1+9) nitric acid to an exact weight of 0.100 g. Dissolve in 5 mL (1+1) nitric acid, heating to effect solution. Cool and dilute to 100 mL with ASTM type I water.

7.3.3 Copper solution, stock 1 mL = 1000 μg Cu: Pickle copper metal in (1+9) nitric acid to an exact weight of 0.100 g. Dissolve in 5 mL (1+1) nitric acid, heating to effect solution. Cool and dilute to 100 mL with ASTM type I water.

7.3.4 Indium solution, stock 1 mL = 1000 μg In: Pickle indium metal in (1+1) nitric acid to an exact weight of 0.100 g. Dissolve in 10 mL (1+1) nitric acid, heating to effect solution. Cool and dilute to 100 mL with ASTM type I water.

7.3.5 Lead solution, stock 1 mL = 1000 μg Pb: Dissolve 0.1599 g $PbNO_3$ in 5 mL (1+1) nitric acid. Dilute to 100 mL with ASTM type I water.

7.3.6 Nickel solution, stock 1 mL = 1000 μg Ni: Dissolve 0.100 g nickel powder in 5 mL conc. nitric acid, heating to effect solution. Cool and dilute to 100 mL with ASTM type I water.

7.3.7 Terbium solution, stock 1 mL = 1000 μg Tb: Dissolve 0.1176 g Tb_4O_7 in 5 mL conc. nitric acid, heating to effect solution. Cool and dilute to 100 mL with ASTM type I water.

7.3.8 Uranium solution, stock 1 mL = 1000 μg U: Dissolve 0.2110 g $UO_2(NO_3)_2.6H_2O$ (DO NOT DRY) in 20 mL ASTM type I water and dilute to 100 mL with ASTM type I water.

7.3.9 Vanadium solution, stock 1 mL = 1000 μg V: Pickle vanadium metal in (1+9) nitric acid to an exact weight of 0.100 g. Dissolve in 5 mL (1+1) nitric acid, heating to effect solution. Cool and dilute to 100 mL with ASTM type I water.

7.3.10 Yttrium solution, stock 1 mL = 1000 μg Y: Dissolve 0.1270 g Y_2O_3 in 5 mL (1+1) nitric acid, heating to effect solution. Cool and dilute to 100 mL with ASTM type I water.

7.4 MULTI-ELEMENT STOCK STANDARD SOLUTION - Care must be taken in the preparation of multi-element stock standards that the elements are compatible and stable. Originating element stocks should be checked for the presence of impurities which might influence the accuracy of the standard. Freshly prepared standards should be transferred to acid cleaned, new FEP or HDPE bottles for storage and monitored periodically for stability. A multi-element stock standard solution containing the elements, cadmium, cobalt, copper, lead, nickel, uranium and vanadium (1 mL = 10 μg) may be prepared by diluting 1 mL of each single element stock in the list to 100 mL with ASTM type I water containing 1% (v/v) nitric acid.

7.4.1 Preparation of calibration standards - Fresh multi-element calibration standards should be prepared weekly. Dilute the stock multi-element standard solution in 1% (v/v) nitric acid to levels appropriate to the required operating range. The element concentrations in the standards should be sufficiently high to produce good measurement precision and to accurately define the slope of the response curve. A suggested mid-range concentration is 10 μg/L.

7.5 BLANKS - In addition to the laboratory fortified blank, two types of blanks are required for this method. A calibration blank is used to establish the analytical calibration curve, and the laboratory reagent blank is used to assess possible contamination from the sample preparation procedure.

7.5.1 Calibration blank - Consists of 1% (v/v) nitric acid in ASTM type I water.

7.5.2 Laboratory reagent blank (LRB) - Must contain all the reagents in the same volumes as used in processing the samples. The LRB must be carried through the entire sample digestion and preparation scheme.

7.6 TUNING SOLUTION - This solution is used for instrument tuning and mass calibration prior to analysis (Sect. 9.2). The solution is prepared by mixing nickel, yttrium, indium, terbium and lead stock

solutions (Sect. 7.3) in 1% (v/v) nitric acid to produce a concentration of 100 µg/L of each element.

7.7 QUALITY CONTROL SAMPLE (QCS) - A quality control sample having certified concentrations of the analytes of interest should be obtained from a source outside the laboratory. Dilute the QCS if necessary with 1% nitric acid, such that the analyte concentrations fall within the proposed instrument calibration range.

7.8 LABORATORY FORTIFIED BLANK (LFB)- To an aliquot of LRB, add aliquots from the multi-element stock standard (Sect. 7.4) to produce a final concentration of 10 µg/L for each analyte. The fortified blank must be carried through the entire sample pretreatment and analytical scheme.

8. SAMPLE COLLECTION, PRESERVATION AND STORAGE

8.1 For the determination of total recoverable elements in aqueous samples, acidify with (1+1) nitric acid at the time of collection to a pH of less than two. The sample should not be filtered prior to analysis.

NOTE: Samples that cannot be acid preserved at the time of collection because of sampling limitations or transport restrictions, should be acidified with nitric acid to pH < 2 upon receipt in the laboratory. Following acidification, the sample should be held for 16 h before withdrawing an aliquot for sample processing.

9. CALIBRATION AND STANDARDIZATION

9.1 Initiate proper operating configuration of ICP-MS instrument and data system. Allow a period of not less than 30 min for the instrument to warm up. During this process conduct mass calibration and resolution checks using the tuning solution. Resolution at low mass is indicated by nickel isotopes 60,61,62. Resolution at high mass is indicated by lead isotopes 206,207,208. For good performance adjust spectrometer resolution to produce a peak width of approximately 0.75 amu at 5% peak height. Adjust mass calibration if it has shifted by more than 0.1 amu from unit mass.

9.2 Instrument stability must be demonstrated by analyzing the tuning solution (Sect. 7.6) a minimum of five times with resulting relative standard deviations of absolute signals for all analytes of less than 5%.

9.3 Prior to initial calibration, set up proper instrument software routines for quantitative analysis and connect the ICP-MS instrument to the preconcentration apparatus. The instrument must be calibrated for the analytes of interest using the calibration blank (Sect. 7.5.1) and calibration standard (Sect. 7.4.1) prepared at one or more concentration levels. The calibration solutions should be

processed through the preconcentration system using the procedures described in Sect. 11.

9.4 Demonstration and documentation of acceptable initial calibration is required before any samples are analyzed and is required periodically throughout sample analysis as dictated by results of continuing calibration checks. After initial calibration is successful, a calibration check is required at the beginning and end of each period during which analyses are performed and at requisite intervals.

9.4.1 After the calibration has been established, it must be initially verified for all analytes by analyzing the QCS (Sect. 7.7). If measurements exceed ± 15% of the established QCS value, the analysis should be terminated, the source of the problem identified and corrected, the instrument recalibrated and the new calibration verified before continuing analyses.

9.4.2 To verify that the instrument is properly calibrated on a continuing basis, run the calibration blank (Sect. 7.5.1) and calibration standards (Sect. 7.4.1) as surrogate samples after every ten analyses. The results of the analyses of the standards will indicate whether the calibration remains valid. If the indicated concentration of any analyte deviates from the true concentration by more than 15%, reanalyze the standard. If the analyte is again outside the 15% limit, the instrument must be recalibrated and the previous ten samples reanalyzed. The instrument responses from the calibration check may be used for recalibration purposes.

9.5 INTERNAL STANDARDIZATION - Internal standardization should be used in all analyses to correct for instrument drift. Internal standards may be added directly to the samples and standards prior to preconcentration or by mixing with the chelating column carrier effluent prior to nebulization using a peristaltic pump and a mixing coil. Information on the use of internal standards may be found in Method 200.8[1]. **NOTE:** Lithium and bismuth should not be used as internal standards using the direct addition method as they are not efficiently concentrated on the imino-diacetate column.

10. QUALITY CONTROL

10.1 Each laboratory using this method is required to operate a formal quality control (QC) program. The minimum requirements of this program consist of an initial demonstration of laboratory capability, and the analysis of laboratory reagent blanks, fortified blanks and samples as a continuing check on performance. The laboratory should maintain performance records that define the quality of the data generated.

10.2 INITIAL DEMONSTRATION OF PERFORMANCE

10.2.1 The initial demonstration of performance is used to characterize instrument performance (method detection limits and linear calibration ranges) for analyses conducted by this method.

10.2.2 Method detection limits (MDL) should be established for all analytes, using reagent water (blank) fortified at a concentration of two to five times the estimated detection limit[6]. To determine MDL values, take seven replicate aliquots of the fortified reagent water and process through the entire analytical method. Perform all calculations defined in the method and report the concentration values in the appropriate units. Calculate the MDL as follows:

$$MDL = (t) \times (S)$$

where, t = Student's t value for a 99% confidence level and a standard deviation estimate with n-1 degrees of freedom [t = 3.14 for seven replicates].

S = standard deviation of the replicate analyses.

MDLs should be determined every six months or whenever a significant change in background or instrument response is expected.

10.2.3 Linear calibration ranges - The upper limit of the linear calibration range should be established for each analyte. Linear calibration ranges should be determined every six months or whenever a significant change in instrument response is expected.

10.3 ASSESSING LABORATORY PERFORMANCE - REAGENT AND FORTIFIED BLANKS

10.3.1 Laboratory reagent blank (LRB) - The laboratory must analyze at least one LRB (Sect. 7.5.2) with each set of samples. LRB data are used to assess contamination from the laboratory environment. If an analyte value in the LRB exceeds its determined MDL, then laboratory or reagent contamination should be suspected. Any determined source of contamination should be corrected and the samples reanalyzed.

10.3.2 Laboratory fortified blank (LFB) - The laboratory must analyze at least one LFB (Sect. 7.8) with each batch of samples. Calculate accuracy as percent recovery (Sect. 10.4.2) If the recovery of any analyte falls outside the control limits (Sect. 10.3.3), that analyte is judged out of control, and the source of the problem should be identified and resolved before continuing analyses.

10.3.3 Until sufficient LFB data become available from within the laboratory (usually a minimum of 20 to 30 analyses), the laboratory should assess laboratory performance against recovery limits of 85-115%. When sufficient internal performance data becomes available, develop control limits from the percent mean recovery (x) and the standard deviation (S) of the mean recovery. These data are used to establish upper and lower control limits as follows:

UPPER CONTROL LIMIT = x + 3S
LOWER CONTROL LIMIT = x - 3S

After each five to ten new recovery measurements, new control limits should be calculated using only the most recent twenty to thirty data points.

10.4 ASSESSING ANALYTE RECOVERY - LABORATORY FORTIFIED SAMPLE MATRIX

10.4.1 The laboratory must add a known amount of each analyte to a minimum of 10% of the routine samples or one sample per sample set, whichever is greater. The analyte concentrations should be the same as those used in the LFB (Sect. 10.3.2). Over time, samples from all routine sample sources should be fortified.

10.4.2 Calculate the percent recovery for each analyte, corrected for the concentrations measured in the unfortified sample, and compare these values to the control limits established in Sect. 10.3.3 for the analyses of LFBs. Recovery calculations are not required if the concentration of the analyte added is less than 10% of the sample concentration. Percent recovery may be calculated in units appropriate to the matrix, using the following equation:

$$R = \frac{C_s - C}{s} \times 100$$

where, R = percent recovery
C_s = fortified sample concentration
C = sample concentration
s = concentration equivalent of fortifier added to sample.

10.4.3 If recovery of any analyte falls outside the designated range and laboratory performance for that analyte is shown to be in control (Sect. 10.3), the recovery problem encountered with the fortified sample is judged to be matrix related, not system related. The result for that analyte in the unfortified sample must be labelled "suspect/matrix" to inform the data user that the results are suspect due to matrix effects.

11. PROCEDURE

11.1 SAMPLE PREPARATION - TOTAL RECOVERABLE ELEMENTS

11.1.1 For the determination of total recoverable elements, take a 100 mL aliquot from a well mixed, acid preserved sample and transfer to a 250-mL Griffin beaker. Add 1 mL of concentrated nitric acid and heat on a hot plate at 85°C until the volume has been reduced to approximately 25 mL, ensuring that the sample does not boil. Cover the beaker with a watch glass and reflux for 30 min. Slight boiling may occur but vigorous boiling should be avoided. Allow to cool and dilute to 100 mL with ASTM type I water. Centrifuge the sample or allow to stand overnight to separate insoluble material.

11.2 Prior to first use, the preconcentration system should be thoroughly cleaned and decontaminated using 0.2M oxalic acid.

11.2.1 Place approximately 500 mL 0.2M oxalic acid in the eluent and carrier solution containers and fill the sample loop with 0.2M oxalic acid using the sample pump (P4) at a flow rate of 3-5 mL/min. With the preconcentration system disconnected from the ICP-MS instrument, use the pump program sequence listed in Table 2, to flush the complete system with oxalic acid. Repeat the flush sequence three times.

11.2.2 Repeat the sequence described in Sect. 11.2.1 using 1.25M nitric acid and again using ASTM type I water in place of the 0.2M oxalic acid.

11.2.3 Rinse the containers thoroughly with ASTM type I water, fill them with their designated reagents (see Figure 1) and run through the sequence in Table 2 once to prime the pump and all eluent lines with the correct reagents.

11.3 Initiate ICP-MS instrument operating configuration. Tune and calibrate the instrument for the analytes of interest (Sect. 9).

11.4 Establish instrument software run procedures for quantitative analysis. Because the analytes are eluted from the preconcentration column in a transient manner, it is recommended that the instrument software is configured in a rapid scan/peak hopping mode.

11.5 Reconnect the preconcentration system to the ICP-MS instrument. With valves A and B in the off position and valve C in the on position, load sample through the sample loop to waste using pump P4 for 4 min at 4 mL/min. Switch on the carrier pump (P3) and pump 1% nitric acid to the nebulizer of the ICP-MS instrument at a flow rate of 0.8-1.0 mL/min.

11.6 Switch on the buffer pump (P2), and pump 2M ammonium acetate at a flow rate of 1 mL/min.

11.7 Preconcentration of the sample may be achieved by running through an eluent pump program (P1) sequence similar to that illustrated in Table 2. The exact timing of this sequence should be modified according to the internal volume of the connecting tubing and the specific hardware configuration used.

11.7.1 Inject sample - With valves A, B and C on, load sample from the loop onto the column using 1M ammonium acetate for 4.5 min at 4.0 mL/min. The analytes are retained on the column, while the majority of the matrix is passed through to waste.

11.7.2 Elute analytes - Turn off valves A and B and begin eluting the analytes by pumping 1.25M nitric acid through the column at 4.0 mL/min, then turn off valve C and pump the eluted analytes into the ICP-MS instrument at 1.0 mL/min. Initiate ICP-MS software data acquisition and integrate the eluted analyte profiles.

11.7.3 Column Reconditioning - Turn on valve C to direct column effluent to waste, and pump 1.25M nitric acid, 1M ammonium acetate, 1.25M nitric acid and 1M ammonium acetate alternately through the column at 4.0 mL/min. During this process, the next sample can be loaded into the sample loop using the sample pump (P4).

11.8 Repeat the sequence described in Sect. 11.7 for each sample to be analyzed. At the end of the analytical run leave the column filled with 1M ammonium acetate buffer until it is next used.

11.9 Samples having concentrations higher than the established linear dynamic range should be diluted into range and re-analyzed.

12. CALCULATIONS

12.1 Analytical isotopes and elemental equations recommended for sample data calculations are listed in Table 3. Sample data should be reported in units of μg/L. Do not report element concentrations below the determined MDL.

12.2 For data values less than ten, two significant figures should be used for reporting element concentrations. For data values greater than or equal to ten, three significant figures should be used.

12.3 Reported values should be calibration blank subtracted. If additional dilutions were made to any samples, the appropriate factor should be applied to the calculated sample concentrations.

12.4 Data values should be corrected for instrument drift by the application of internal standardization. Corrections for characterized spectral interferences should be applied to the data.

12.5 The QC data obtained during the analyses provide an indication of the quality of the sample data and should be provided with the sample results.

13. PRECISION AND ACCURACY

13.1 Experimental conditions used for single laboratory testing of the method are summarized in Table 4.

13.2 Data obtained from single laboratory testing of the method are summarized in Tables 5 and 6 for two reference water samples consisting of National Research Council Canada (NRCC), Estuarine Water (SLEW-1) and Seawater (NASS-2). The samples were prepared using the procedure described in Sect. 11.2.1. For each matrix, three replicates were analyzed and the average of the replicates used for determining the sample concentration for each analyte. Two further sets of three replicates were fortified at different concentration levels, one set at 0.5 µg/L, the other at 10 µg/L. The sample concentration, mean percent recovery, and the relative standard deviation of the fortified replicates are listed for each method analyte. The reference material certificate values are also listed for comparison.

14. REFERENCES

1. USEPA Method 200.8, Office of Research and Development, USEPA, Cincinnati, Ohio, August 1990.

2. A. Siraraks, H.M. Kingston and J.M. Riviello, *Anal Chem.* 62 1185 (1990).

3. E.M. Heithmar, T.A. Hinners, J.T. Rowan and J.M. Riviello, *Anal Chem.* 62 857 (1990).

4. "OSHA Safety and Health Standards, General Industry," (29 CFR 1910), Occupational Safety and Health Administration, OSHA 2206, revised January 1976.

5. "Proposed OSHA Safety and Health Standards, Laboratories," Occupational Safety and Health Administration, Federal Register, July 24, 1986.

6. Code of Federal Regulations 40, Ch. 1, Pt. 136 Appendix B.

TABLE 1: TOTAL RECOVERABLE METHOD DETECTION LIMITS FOR REAGENT WATER

ELEMENT	RECOMMENDED ANALYTICAL MASS	MDL µg/L
Cadmium	111	0.041
Cobalt	59	0.021
Copper	63	0.023
Lead	206,207,208	0.074
Nickel	60	0.081
Uranium	238	0.031
Vanadium	51	0.014

TABLE 2: Eluent PUMP PROGRAMMING SEQUENCE FOR PRECONCENTRATION OF TRACE ELEMENTS

Time (min)	Flow mL/min	Eluent	Valve A,B	Valve C
0.0	4.0	1M ammonium acetate	ON	ON
4.5	4.0	1.25M nitric acid	ON	ON
5.1	1.0	1.25M nitric acid	OFF	ON
5.5	1.0	1.25M nitric acid	OFF	OFF
7.5	4.0	1.25M nitric acid	OFF	ON
8.0	4.0	1M ammonium acetate	OFF	ON
10.0	4.0	1.25M nitric acid	OFF	ON
11.0	4.0	1M ammonium acetate	OFF	ON
12.5	0.0		OFF	ON

TABLE 3: RECOMMENDED ANALYTICAL ISOTOPES AND ELEMENTAL EQUATIONS FOR DATA CALCULATIONS

Element	Isotope	Elemental Equation	Note
Cd	106,108,<u>111</u>,114	$(1.000)(^{111}C)-(1.073)[(^{108}C)-(0.712)(^{106}C)]$	(1)
Co	59	$(1.000)(^{59}C)$	
Cu	<u>63</u>,65	$(1.000)(^{63}C)$	
Pb	<u>206</u>,<u>207</u>,<u>208</u>	$(1.000)(^{206}C)+(1.000)(^{207}C)+(1.000)(^{208}C)$	(2)
Ni	60	$(1.000)(^{60}C)$	
U	238	$(1.000)(^{238}C)$	
V	51	$(1.000)(^{51}C)$	

C - calibration blank subtracted counts at specified mass.
(1) - correction for MoO interference. An additional isobaric elemental correction should be made if palladium is present.
(2) - allowance for isotopic variability of lead isotopes.

NOTE: As a minimum, all isotopes listed should be monitored. Isotopes recommended for analytical determination are underlined.

TABLE 4: EXPERIMENTAL CONDITIONS FOR SINGLE LABORATORY VALIDATION

Chromatography	
Instrument	Dionex chelation system
Preconcentration column	Dionex MetPac CC-1
ICP-MS Instrument Conditions	
Instrument	VG PlasmaQuad Type I
Plasma forward power	1.35 kW
Coolant flow rate	13.5 L/min
Auxiliary flow rate	0.6 L/min
Nebulizer flow rate	0.78 L/min
Internal standards	Sc, Y, In, Tb
Data Acquisition	
Detector mode	Pulse counting
Mass range	45-240 amu
Dwell time	160 μs
Number of MCA channels	2048
Number of scan sweeps	250

TABLE 5: PRECISION AND RECOVERY DATA FOR ESTUARINE WATER (SLEW-1)

Analyte	Certificate (μg/L)	Sample Concn. (μg/L)	Spike Addition (μg/L)	Average Recovery (%)	RSD (%)	Spike Addition (μg/L)	Average Recovery (%)	RSD (%)
Cd	0.018	<0.041	0.5	94.8	9.8	10	99.6	1.1
Co	0.046	0.078	0.5	102.8	4.0	10	96.6	1.4
Cu	1.76	1.6	0.5	106.0	2.7	10	96.0	4.8
Pb	0.028	<0.074	0.5	100.2	4.0	10	106.9	5.8
Ni	0.743	0.83	0.5	100.0	1.5	10	102.0	2.1
U	--	1.1	0.5	96.7	7.4	10	98.1	3.6
V	--	1.4	0.5	100.0	3.2	10	97.0	4.5

-- No certificate value

TABLE 6: PRECISION AND RECOVERY DATA FOR SEAWATER (NASS-2)

Analyte	Certificate (μg/L)	Sample Concn. (μg/L)	Spike Addition (μg/L)	Average Recovery (%)	RSD (%)	Spike Addition (μg/L)	Average Recovery (%)	RSD (%)
Cd	0.029	<0.041	0.5	101.8	1.0	10	96.4	3.7
Co	0.004	<0.021	0.5	98.9	3.0	10	99.2	1.7
Cu	0.109	0.12	0.5	95.8	2.3	10	93.1	0.9
Pb	0.039	<0.074	0.5	100.6	8.5	10	92.1	2.6
Ni	0.257	0.23	0.5	102.2	2.3	10	98.2	1.2
U	3.00	3.0	0.5	94.0	0.7	10	98.4	1.7
V	--	1.7	0.5	104.0	3.4	10	109.2	3.7

-- No certificate value

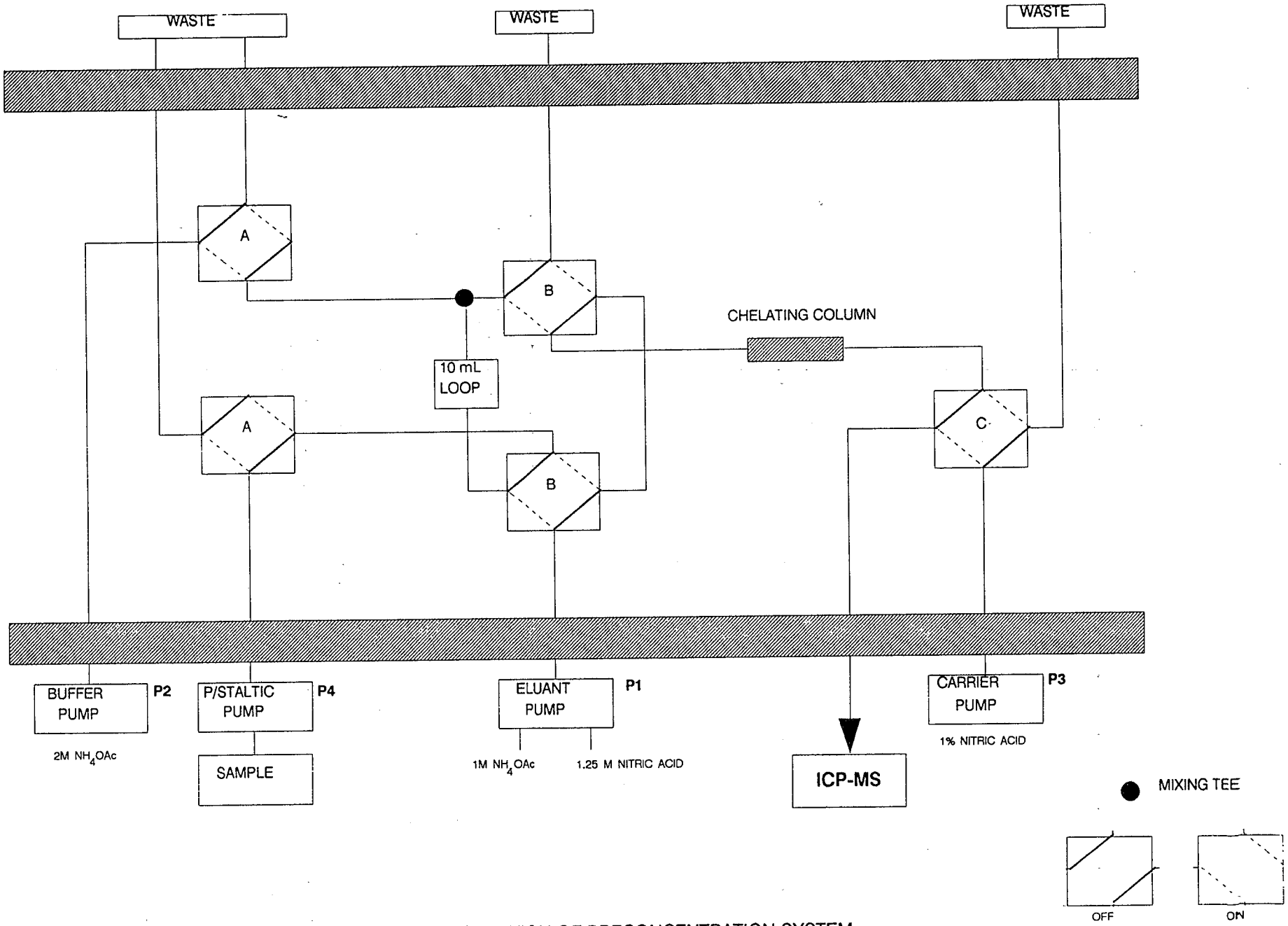

FIGURE 1: CONFIGURATION OF PRECONCENTRATION SYSTEM

METHOD 200.11

DETERMINATION OF METALS IN FISH TISSUE BY INDUCTIVELY COUPLED PLASMA-ATOMIC EMISSION SPECTROMETRY

Theodore D. Martin, Eleanor R. Martin
and
Larry B. Lobring
Inorganic Chemistry Branch
Chemistry Research Division

and

Gerald D. McKee
Office of the Director

Revision 2.1
April 1991

ENVIRONMENTAL MONITORING SYSTEMS LABORATORY
OFFICE OF RESEARCH AND DEVELOPMENT
U.S. ENVIRONMENTAL PROTECTION AGENCY
CINCINNATI, OHIO 45268

METHOD 200.11

DETERMINATION OF METALS IN FISH TISSUE BY INDUCTIVELY COUPLED PLASMA-ATOMIC EMISSION SPECTROMETRY

1. SCOPE AND APPLICATION

1.1 This method is an inductively coupled plasma (ICP)-atomic emission spectrometric procedure for use in determination of naturally occurring and accumulated toxic metals in the edible tissue portion (fillet) of the fish. The tissue must be taken from a fresh, not previously frozen, fish to prevent analyte loss or tissue contamination due to cell lysis and resulting fluid exchange. The method is not intended to be used for analysis of dried fish tissue. This method is applicable to the determination of the following metals:

Analyte	Chemical Abstract Services Registry Numbers (CASRN)
Aluminum (Al)	7429-90-5
Antimony (Sb)	7440-36-0
Arsenic (As)	7440-38-2
Beryllium (Be)	7440-41-7
Cadmium (Cd)	7440-43-9
Chromium (Cr)	7440-47-3
Copper (Cu)	7440-50-8
Lead (Pb)	7439-92-1
Nickel (Ni)	7440-02-0
Selenium (Se)	7782-49-2
Thallium (Tl)	7440-28-0
Zinc (Zn)	7440-66-6

1.2 This method also may be used for spectrochemical determination of other elements commonly found in fish tissue. Specific analytes included are the following:

Analyte	Chemical Abstract Services Registry Numbers (CAS RN)
Calcium (Ca)	7440-70-2
Iron (Fe)	7439-89-6
Magnesium (Mg)	7439-95-4
Phosphorus (P)	7723-14-0
Potassium (K)	7440-09-7
Sodium (Na)	7440-23-5

1.3 Specific instrumental operating conditions are given and should be used whenever possible. However, because of the differences between various makes and models of spectrometers, the analyst should follow the instrument manufacturer's instructions in

adapting the instrument's operation to approximate the recommended conditions given in this method.

1.4 Table 1 lists the recommended wavelengths with locations for background correction for the metals presently included in this method. Also listed in Table 1 are typical method detection limits (MDLs)[1] for certain metals determined in fish tissue using conventional pneumatic nebulization for sample introduction into the ICP.

1.5 Once the tissue samples have been collected, approximately 20 fish fillet samples including the mandatory quality control samples can be analyzed using this method during the 1.5 day work period required to complete the analysis.

2. SUMMARY OF METHOD

2.1 A 1 to 2 g sample of fish tissue is taken from a fresh (not previously frozen) fish and transferred to a preweighed, labeled polysulfone Oak Ridge type centrifuge tube. The tissue is dissociated using tetramethylammonium hydroxide[2,3], low heat and vortex mixing. The following day, the metals in the resulting colloidal suspension are acid solubilized with nitric acid and heat, and then diluted with deionized, distilled water to a weight volume ratio equal to 1 g fish tissue per 10 mL of solution. The diluted sample is vortex mixed, centrifuged and finally the acidified aqueous solution is analyzed by direct aspiration background corrected ICP atomic emission spectrometry. The determined metal concentration is reported as microgram/gram (μg/g) wet fish tissue weight.

2.2 The basis of the method determination step is the measurement of atomic emission by optical spectroscopy. The sample is nebulized and the aerosol that is produced is transported to the plasma torch where excitation occurs. Characteristic atomic-line emission specta are produced by a radio-frequency ICP. The spectra are dispersed by a grating spectrometer and the intensities of the lines are monitored by photomultiplier tubes. The photocurrents from the photomultiplier tubes are processed and controlled by a computer system. Background correction is required to compensate for the variable background contribution of fish matrix and reagents to the analyte determination. The location recommended for background correction for each analyte is given in Table 1.

3. DEFINITIONS

3.1 FISH TISSUE - The skinless edible muscle tissue of the fish commonly referred to as the fillet.

3.2 METHOD DETECTION LIMIT (MDL) - The minimum concentration of an analyte that can be identified, measured and reported with 99% confidence that the analyte concentration is greater than zero.

3.3 CALIBRATION BLANK - A volume of deionized, distilled water containing all reagents used to prepare the tissue for analyses. The calibration blank is a zero standard and is used to calibrate the ICP instrument. (Sect. 7.9).

3.4 FIELD DUPLICATES (FD1 and FD2) - Two separate samples collected at the same time and place under identical circumstances and treated exactly the same throughout field and laboratory procedures. Analyses of FD1 and FD2 give a measure of the precision associated with sample collection, preservation, and storage, as well as with laboratory procedure.

3.5 LABORATORY REAGENT BLANK (LRB) - An aliquot of tetramethylammonium hydroxide that is treated exactly as a sample including exposure to all glassware, equipment, and reagents that are used with other samples. The LRB is used to determine if method analytes or other interferences are present in the laboratory environment, reagents, or apparatus (Sect. 10.3.1)

3.6 FIELD REAGENT BLANK (FRB) - An empty Oak Ridge polysulfone sample tube (Sect. 6.2.3) is treated as a sample in all respects, including exposure to sampling site conditions, storage, preservation, and all analytical procedures. The purpose of the FRB is to determine if method analytes or other interferences are present in the field environment (Sect. 10.3.2).

3.7 LABORATORY PERFORMANCE CHECK SOLUTION (LPC) - A solution of method analytes used to evaluate the performance of the instrument system with respect to a defined set of method criteria (Sect. 7.10.1).

3.8 LABORATORY FORTIFIED BLANK (LFB) - An aliquot of tetramethylammonium to which known quantities of the method analytes are added in the laboratory. The LFB is analyzed exactly like a sample and its purpose is to determine whether the method is in control and whether the laboratory is capable of making accurate and precise measurements at the required method detection limit (Sect. 10.3.4).

3.9 LABORATORY FORTIFIED SAMPLE MATRIX (LFM) - An aliquot of fish tissue to which known quantities of the method analytes are added in the laboratory. The LFM is analyzed exactly like a sample, and its purpose is to determine whether the sample matrix contributes bias to the analytical results. The background concentrations of the analytes in the sample matrix must be determined in a separate aliquot and the measured values in the LFM corrected for background concentrations (Sect. 10.4).

3.10 STOCK STANDARD SOLUTION - A concentrated solution containing a single certified standard that is a method analyte, or a

concentrated solution of a single analyte prepared in the laboratory with an assayed reference compound. Stock standard solutions are used to prepare primary dilution standards (Sect. 7.6).

3.11 PRIMARY DILUTION STANDARD SOLUTION - A solution of several analytes prepared in the laboratory from stock standard solutions and diluted as needed to prepared calibration solutions and other needed analyte solutions (Sect. 7.7).

3.12 CALIBRATION STANDARD (CAL) - A solution prepared from the primary dilution standard solution. The CAL solutions are used to calibrate the instrument response with respect to analyte concentration (Sect. 7.9).

3.13 QUALITY CONTROL SAMPLE (QCS) - A solution of method analytes of known concentrations which is used to fortify an aliquot of LRB matrix. The QCS is obtained from a source external to the laboratory and used to check laboratory performance with externally prepared test materials (Sect. 10.2.2).

4. INTERFERENCES

4.1 Occurrences of chromium contamination of biological samples from the use of stainless steel have been reported in the literature.[4] Use of special cutting implements and dissecting board made from materials that are not of interest is recommended. Knife blades made of titanium with Teflon handles have been successfully used.

4.2 Sample contamination and losses are held to a minimum because the collected sample is preserved, processed and analyzed in the same polysulfone centrifuge tube. However, the stability of metals in the analysis solution is not fully documented and therefore, the sample should be analyzed within 24 h after completion of the preparation procedure (Sects. 11.2 to 11.7).

4.3 The processed sample ready for analysis will contain a precipitate and possibly floatable solids as a surface layer partially covering the analysis solution. Nevertheless, physical occlusion of metals in these solids is not expected. Percent recoveries of all metal concentrations added, except antimony, are near or exceed 90% (Sect. 13.4.)

4.4 Because all samples are diluted to the same weight volume ratio (1 g/10 mL), all samples of the same type of fish tissue have similar concentrations of the major constituents in the matrix. These major constituent elements (Ca, K, Mg, Na and P) do not suppress analyte signal intensities or cause interelement spectral interferences for the wavelengths and analytical conditions recommended. However, these elements represent a small portion (<1500mg/L) of the approximate 5% dissolved solids in the solution matrix that is aspirated. Tetramethylammonium hydroxide accounts for the majority of the matrix and is believed to undergo chemical

change during sample preparation (Sect. 11); this causes slight shifts in background intensity and molecular band contribution to wavelength signals near 190 nanometers (nm). Although background correction adjacent to the wavelength will compensate for the majority of the broad band interferences, LRB (Sect. 3.5) subtraction must be used to provide the additional correction needed for the wavelengths of As (193.7 nm), Se (196.0 nm) and Th (190.8 nm).

4.5 Dissolved solids exceeding 1500 to 2000 mg/L can cause a reduction in atomic emission signal intensities. In this method, because the calibration standard and sample solutions both contain approximately 5% dissolved solids, any resulting matrix effect is minimized. Of greater importance is that partial clogging of the instrument nebulizer and torch impinger tube does not occur.

4.6 The number of interelement spectral interferences in the fish tissue matrix is minimal. Listed below are all interelement correction factors determined for the wavelengths and background correction locations recommended in this method. Although these factors are only applicable to the instrument used in the development of this method, they can be used as a guide and are evidence that, except for fortified samples, most fish tissue analyses do not require interelement correction factors. It should be noted that if a listed interferant is present at a concentration of 10 µg/g or less, its apparent concentration on the analyte channel is less than the analyte's determined MDL.

INTERELEMENT CORRECTION FACTORS

Analyte	Interferant	Factor
As	Al	+0.0080
As	Be	-0.0027
As	Ni	-0.0056
Cr	Cu	-0.0007
Cr	Ni	+0.0006
Cr	Fe	-0.0003
Pb	Al	-0.234
Pb	Cu	+0.0008
Sb	Cr	+0.0150
Sb	Ni	-0.0087
Se	Fe	-0.0205
Zn	Cu	+0.0013
Zn	Ni	+0.0039

A 1 µg/g concentration of interferant would either add to or subtract from the analyte an apparent concentration in µg/g equal to the value of the correction factor.

4.7 The following "off-the-line" background correction locations should be avoided because of existing spectral interference.

4.7.1 The low side (- 0.07 nm) of the 190.8 nm Th wavelength has a spectral interference from phosphorus.

4.7.2 Background correction on the low side of the 193.7 nm As wavelength below - 0.06 nm may result in a severe negative bias.

4.7.3 The high side (+ 0.07 nm) of the 196.0 nm Se wavelength has a severe undefined spectral interference originating from the tetramethylammonium hydroxide.

4.7.4 Background correction on the low side of the 259.9 nm Fe wavelength below - 0.06 nm may result in spectral interference from 259.8 nm Fe wavelength.

4.7.5 The low side (- 0.05 nm) of the 308.2 nm Al wavelength has a spectral interference from argon.

4.7.6 The low side (- 0.04 nm) of the 213.8 nm Zn wavelength read in the 2nd order has a weak spectral interference from magnesium.

5. SAFETY

5.1 All personnel handling environmental samples known to contain or to have been in contact with human waste should be immunized against known disease causative agents.

5.2 Precautions should also be taken to minimize potential bacterial infections from handling and dissecting fish. Basic good housekeeping and sanitation practices and use of rubber or plastic gloves are recommended.

5.3 Mobile and remote sampling locations should be equipped with a communication system to summon help in case of an emergency. It is recommended that field personnel not work alone.

5.4 Material safety data sheets for all chemical reagents should be available to and understood by all personnel using this method. Specifically, tetramethylammonium hydroxide (25%) and concentrated nitric acid are moderately toxic and extremely irritating to skin and mucus membranes. Use these reagents in a hood whenever possible and if eye or skin contact occurs, flush with large volumes of water. Always wear safety glasses or a shield for eye protection when working with these reagents.

6. APPARATUS AND EQUIPMENT

6.1 TISSUE DISSECTING EQUIPMENT

6.1.1. Dissecting Board: Polyethylene or other inert, nonmetallic material; any non-wetting, easy-to-clean or disposable surface is suitable. Adhesive backed Teflon or plastic film may be convenient to use.

6.1.2 Forceps: Plastic, Teflon or Teflon coated.

6.1.3 Surgical Blades: Disposable stainless steel with stainless steel or plastic handle (Sect. 4.1).

6.1.4 Scissors: Stainless steel.

6.1.5 Plastic bags with watertight seal, metal free.

6.1.6 Label tape: Self-adhesive, vinyl-coated marking tape, solvent resistant, usable from -23°C to 122°C.

6.1.7 Polyvinyl chloride or rubber gloves, talc-free.

6.2 Labware - All reusable glassware, polysulfone and Teflon containers must be soaked and washed with detergent, rinsed with tap water, soaked for 4 h in a mixture of dilute nitric and hydrochloric acid (1+2+9), rinsed again with tap water followed by deionized, distilled water (Sect. 7.1) and oven drying. The use of chromic acid must be avoided.

6.2.1 Glassware: Class A volumetric flasks of various volumes, assorted calibrated pipettes and beakers.

6.2.2 Oak Ridge type centrifuge tubes: 30-mL capacity, polysulfone tube with polypropylene screw closure (available from most suppliers of laboratory equipment).

6.2.3 Storage bottles: Narrow-mouth bottles, Teflon FEP (fluorinated ethylene propylene) with Tefzel ETFE (ethylene tetrafluorethylene) screw closure, 125-mL and 250-mL capacities.

6.2.4 Wash bottle: One-piece stem, Teflon FEP bottle with Tefzel ETFE screw closure, 125-mL capacity.

6.3 SAMPLE PROCESSING EQUIPMENT

6.3.1 Air Displacement Pipetter: Digital pipet capable of delivering volumes ranging from 0.1 to 2500 microliters with an assortment of high quality disposable pipet tips.

6.3.2 Hot Plate: Ceramic top, graduated dial 90°C to 450°C (Corning PC100 or equivalent).

6.3.3 Test tube rack: Polycarbonate tube size 25-30 mm, 3 x 8 array.

6.3.4 Single pan balance capable of weighing to the nearest 0.01 g.

6.3.5 Analytical balance capable of weighing to the nearest 0.0001 g.

6.3.6 Vortex mixer with neoprene mixing head and built-in rheostat control.

6.3.7 Centrifuge: Steel cabinet with guard bowl, capable of reaching 2000 r.p.m. compatible with centrifuge tubes (Sect. 6.2.3), electric timer and brake. (International Centrifuge, Universal Model UV or equivalent.)

6.3.8 Drying oven: Gravity convection oven, with thermostatic control capable of maintaining 65°C and 100°C ± 5°C with an interior dimension of no smaller than 14" x 6" x 6".

6.4 ANALYTICAL INSTRUMENTATION

6.4.1 The ICP instrument may be a simultaneous or sequential spectrometer system that uses ionized argon gas as the plasma. However, the system and the processing of background corrected signals must be computer controlled. The instrument must be capable of meeting and complying with the requirements and description of the technique given in Sect. 2.2. The instrument must be equipped with a nebulizer and torch impinger tube that has an orifice capable of accepting 5% dissolved solids.

6.4.2 A variable speed peristaltic pump is required to deliver both standard and sample solutions to the nebulizer.

6.4.3 The use of mass flow controllers to regulate the argon flow rates, especially through the nebulizer, are highly recommended. Their use will provide more exacting control of reproducible plasma conditions.

7. REAGENTS AND CONSUMABLE MATERIAL

7.1 Deionized, distilled water: Prepare by passing distilled water through a mixed bed of cation and anion exchange resins. Use deionized, distilled water for the preparation of all reagents and as dilution or rinse water. The purity of this water must be equivalent to ASTM Type II reagent water of Specification D 1193.[5]

7.2 Nitric acid (HNO_3), conc. (sp.gr. 1.41) (CASRN 7697-37-2), ACS reagent grade or equivalent. Redistilled acid is acceptable.

7.2.1 Nitric acid, (1+1): Add 500 mL conc. HNO_3 (Sect. 7.2) to 400 mL deionized, distilled water (Sect. 7.1) and dilute to 1 L.

7.2.2 Nitric acid, (1 + 9): Add 100 mL conc. HNO_3 (Sect. 7.2) to 400 mL deionized distilled water (Sect. 7.1) and dilute to 1 L.

7.3 Hydrochloric acid (HCl), conc. (sp. gr. 1.19, CASRN 7647-01-0), ACS reagent grade or equivalent.

7.3.1 Hydrochloric acid, (1+1): Add 500 mL conc. HCl (Sect. 7.3) to 400 mL deionized, distilled water (Sect. 7.1) and dilute to 1 L.

7.4 Tetramethylammonium hydroxide [$(CH_3)_4NOH$], (CASRN 75-59-2), TMAH 25% aqueous solution, electronic grade 99.9999% (metals basis) ALFA #20932 or equivalent.

7.5 Ammonium hydroxide (NH_4OH) (CASRN 1336-21-6), ACS reagent grade or equivalent (sp. gr. 0.902).

7.6 Standard stock solutions may be purchased or prepared from ultra-high purity grade chemicals or metals. All salts must be dried for 1 h at 105°C unless specified otherwise. (CAUTION: Wash hands thoroughly after handling). Typical stock solution preparation procedures follow.

NOTE: Some metals, particularly those which form surface oxides require cleaning prior to being weighed. This may be achieved by pickling the surface of the metal in acid. An amount in excess of the desired weight should be pickled repeatedly, rinsed with water, dried and weighed until the desired weight is achieved.

7.6.1 Aluminum solution, stock (1 mL = 1000 μg Al) - Pickle aluminum metal in warm (1+1) hydrochloric acid to an exact weight of 0.100 g. Dissolve in an acid mixture of 5 mL (1+1) hydrochloric acid and 1 mL conc. nitric acid in a beaker. Warm gently to effect solution. When solution is complete, transfer quantitatively to a 100-mL volumetric flask and dilute to the mark with deionized, distilled water. Store the solution in a screwcap Teflon FEP storage bottle (Sect. 6.2.3).

7.6.2 Antimony solution, stock (1 mL = 1000 μg Sb) - Dissolve 0.100 g antimony powder (CASRN 7440-36-0) in 2 mL (1+1) nitric acid and 0.5 mL conc. hydrochloric acid, heating to effect solution. Cool, add 20 mL deionized, distilled water and 0.15 g tartaric acid. Warm the solution to dissolve the white precipitate. Cool and dilute to 100 mL in volumetric flask with deionized distilled water. Store the solution in a screwcap Teflon FEP storage bottle (Sect. 6.2.3).

7.6.3 Arsenic solution, stock (1 mL = 1000 μg As) - Dissolve 0.1320 g arsenic trioxide (As_2O_3) (CASRN 1327-53-3) in 50 mL deionized, distilled water and 1 mL conc. ammonium hydroxide. Heat gently to dissolve. Acidify the solution with 2 mL conc. nitric acid and dilute to 100 mL in a volumetric flask with deionized, distilled water. Store the solution in a screwcap Teflon FEP storage bottle (Sect. 6.2.3).

7.6.4 Beryllium solution stock (1 mL = 500 μg Be) - Do not dry. Dissolve 0.9830 g beryllium sulfate ($BeSO_4 \cdot 4H_2O$) in deionized, distilled water, add 1.0 mL conc. nitric acid and dilute to 100 mL in a volumetric flask with deionized, distilled water. Store the solution in a screwcap Teflon FEP storage bottle (Sect. 6.2.3).

7.6.5 Cadmium solution stock (1 mL = 1000 μg Cd) - Pickle cadmium metal in (1+9) nitric acid to an exact weight of 0.100 g. Dissolve in 4 mL conc. nitric acid, dilute to 100 mL in a volumetric flask with deionized, distilled water. Store the solution in a screwcap Teflon FEP storage bottle (Sect. 6.2.3).

7.6.6 Calcium solution stock (1 mL = 1000 μg Ca) - Suspend 0.2498 g calcium carbonate ($CaCO_3$) dried at 180°C for 1 h before weighing, in deionized, distilled water). Dissolve cautiously reacting is vigorous) by adding dropwise 10.0 mL (1+1) hydrochloric acid and dilute to 100 mL in a volumetric flask with deionized, distilled water. Store the solution in a screwcap Teflon FEP storage bottle (Sect. 6.2.3).

7.6.7 Chromium solution, stock (1 mL = 1000 μg Cr) - Dissolve 0.1923 g chromium trioxide (CrO_3) in deionized, distilled water. When solution is complete, acidify with 1 mL conc. nitric acid and dilute to 100 mL in a volumetric flask with deionized, distilled water. Store the solution in a screwcap Teflon FEP storage bottle (Sect. 6.2.3).

7.6.8 Copper solution, stock (1 mL = 1000 μg Cu) - Pickle copper metal in (1+9) nitric acid to an exact weight of 0.100 g. Dissolve in 2 mL conc. nitric acid. Dilute to 100 mL in a volumetric flask with deionized, distilled water. Store the solution in a screwcap Teflon FEP storage bottle (Sect. 6.2.3).

7.6.9 Iron solution, stock (1 mL = 1000 μg Fe) - Pickle iron metal in (1+1) hydrochloric acid to an exact weight of 0.100 g. Dissolve in 10 mL (1+1) hydrochloric acid. Dilute to 100 mL in a volumetric flask with deionized, distilled water (Sect. 7.1). Store the solution in a screwcap Teflon FEP storage bottle (Sect. 6.2.3).

7.6.10 Lead solution, stock (1 mL = 1000 μg Pb) - Dissolve 0.1613 g lead nitrate [$Pb(NO_3)_2$] in a minimum amount of (1+1) nitric acid. Add 5 mL conc. nitric acid. Dilute to 100 mL in a volumetric flask with deionized, distilled water. Store the solution in screwcap Teflon FEP storage bottle (Sect. 6.2.3).

7.6.11 Magnesium solution, stock (1 mL = 1000 μg Mg) - Dissolve 0.1658 g magnesium oxide (MgO in 10 mL (1+1) nitric acid, heating to effect solution. Cool and dilute to 100 mL in a volumetric flask with deionized, distilled water. Store the solution in a screwcap Teflon FEP storage bottle (Sect. 6.2.3).

7.6.12 Nickel solution, stock (1 mL = 1000 μg Ni) - Dissolve 0.100 g nickel metal in 5 mL hot conc. nitric acid. Cool and dilute to 100 mL in a volumetric flask with deionized, distilled water. Store the solution in a screwcap Teflon FEP storage bottle (Sect. 6.2.3).

7.6.13 Phosphorus solution, stock (1 mL = 1000 μg P) - Dissolve 0.3745 g ammonium phosphate, monobasic [$(NH_4)H_2PO_4$] (CASRN 7722-76-1) in deionized, distilled water and dilute to 100 mL in a volumetric flask. Store the solution in a screwcap Teflon FEP storage bottle (Sect. 6.2.3).

7.6.14 Potassium solution, stock (1 mL = 1000 μg K) - Dissolve 0.1907 g potassium chloride (KCl) previously dried at 110°C for 3 h, in deionized, distilled water, add 2 mL (1+1) hydrochloric acid and dilute to 100 mL in a volumetric flask. Store the solution in a screwcap Teflon FEP storage bottle (Sect. 6.2.3).

7.6.15 Selenium solution, stock (1 mL = 1000 μg Se) - Dissolve 0.1414 g selenium dioxide (SeO_2) in deionized, distilled water and dilute to 100 mL in a volumetric flask. Store the solution in a screwcap Teflon FEP storage bottle (Sect. 6.2.3).

7.6.16 Sodium solution, stock (1 mL = 1000 μg Na) - Dissolve 0.2542 g sodium chloride (NaCl) in deionized, distilled water. Add 1.0 mL conc. nitric acid and dilute to 100 mL in a volumetric flask with deionized, distilled water. Store the solution in a screwcap Teflon FEP storage bottle (Sect. 6.2.3).

7.6.17 Thallium solution, stock (1 mL = 1000 μg Tl) - Dissolve 0.1303 g thallous nitrate ($TlNO_3$) in deionized, distilled water. Add 1.0 mL conc. nitric acid and dilute to 100 mL in a volumetric flask with deionized, distilled water. Store the solution in a screwcap Teflon FEP storage bottle (Sect. 6.2.3).

7.6.18 Zinc solution, stock (1 mL = 1000 μg Zn) - Pickle zinc metal in (1+9) nitric acid to an exact weight of 0.100 g. Dissolve in 5 mL conc. nitric acid. Dilute to 100 mL in a volumetric flask with deionized, distilled water. Store the solution in a screwcap Teflon FEP storage bottle (Sect. 6.2.3).

7.7 Prepare four 100 mL primary standard solutions (Sect. 3.11) by combining aliquots from the appropriate individual stock solutions (Sect. 7.6) in volumetric flasks and diluting to the mark with deionized, distilled water. For the wavelength and background correction positions recommended, prepare the primary standard solution using the following listed aliquot volumes of the individual stock standards. Transfer the prepared primary standard solutions in screwcap Teflon FEP storage bottles (Sect. 6.2.3).

7.7.1 Primary standard solution I (Volume = 100.0 mL)

Analyte	Stock Solution	Aliquot Vol., mL	Analyte Conc., μg/mL
Al	7.6.1	10.0	100
Ca	7.6.6	10.0	100
Cd	7.6.5	2.0	20
Cu	7.6.8	1.0	10
Mg	7.6.11	10.0	100
Sb	7.6.2	5.0	50
Se	7.6.15	5.0	50

7.7.2 Primary standard solution II (Volume = 100.0 mL)

Analyte	Stock Solution	Aliquot Vol., mL	Analyte Conc., μg/mL
As	7.6.3	10.0	100
Cr	7.6.7	5.0	50

7.7.3 Primary standard solution III (Volume = 100.0 mL)

Analyte	Stock Solution	Aliquot Vol., mL	Analyte Conc., μg/mL
Na	7.6.16	10.0	100
Pb	7.6.10	10.0	100
Tl	7.6.17	5.0	50
Zn	7.6.18	5.0	50

7.7.4 Primary standard solution IV (Volume = 100.0 mL)

Analyte	Stock Solution	Aliquot Vol., mL	Analyte Conc., µg/mL
Be	7.6.4	2.0	10
Fe	7.6.9	10.0	100
K	7.6.14	20.0	200
Ni	7.6.12	2.0	20
P	7.6.13	10.0	100

7.8 For calibrating the instrument, prepare four CAL solutions (Sect. 3.12), each in 100-mL volumetric flask by adding 10 mL TMAH (Sect. 7.4) and 5 mL of conc. nitric acid to 10 mL of each of the four primary standard solutions (Sect. 7.7) and dilute to the mark with deionized, distilled water. Transfer the prepared calibration standards to screwcap Teflon FEP storage bottles (Sect. 6.2.3).

7.8.1 CAL solution I (Volume = 100.0 mL)

Analyte	Conc., µg/mL
Al	10.0
Ca	10.0
Cd	2.0
Cu	1.0
Mg	10.0
Sb	5.0
Se	5.0

7.8.2 CAL solution II (Volume = 100.0 mL)

Analyte	Conc., µg/mL
As	10.0
Cr	5.0

7.8.3 CAL solution III (Volume = 100.0 mL)

Analyte	Conc., µg/mL
Na	10.0
Pb	10.0
Tl	5.0
Zn	5.0

7.8.4 CAL solution IV (Volume = 100.0 mL)

Analyte	Conc., µg/mL
Be	1.0
Fe	10.0
K	20.0
Ni	2.0
P	10.0

7.9 Prepare a calibration blank by diluting the combination solution of 10 mL TMAH (Sect. 7.4) and 5 mL conc. nitric acid to 100 mL in a volumetric flask with deionized, distilled water. Store the calibration blank in a screwcap Teflon FEP storage bottle (Sect. 6.2.4).

7.10 Prepare a laboratory performance check (LPC) stock solution in a 100-mL volumetric flask by combining the following listed aliquot volumes of the individual stock standards and diluting to the mark with deionized, distilled water. Transfer the stock solution to a screwcap Teflon FEP storage bottle (Sect. 6.2.3).

Analyte	Stock Solution	Aliquot Vol., mL	Analyte Conc., µg/mL
Al	7.6.1	1.0	10.0
As	7.6.3	1.0	10.0
Be	7.6.4	2.0	10.0
Ca	7.6.6	2.0	20.0
Cd	7.6.5	1.0	10.0
Cr	7.6.7	1.0	10.0
Cu	7.6.8	1.0	10.0
Fe	7.6.9	1.0	10.0
K	7.6.14	10.0	100.0
Mg	7.6.11	2.0	20.0
Na	7.6.16	2.0	20.0
Ni	7.6.12	1.0	10.0
P	7.6.13	10.0	100.0
Pb	7.6.10	1.0	10.0
Sb	7.6.2	1.0	10.0
Se	7.6.15	1.0	10.0
Tl	7.6.17	1.0	10.0
Zn	7.6.18	1.0	10.0

7.10.1 At the time of calibration prepare the LPC in a 100-mL volumetric flask by adding in the following order, 10 mL TMAH (Sect. 7.4) and 5 mL conc. nitric acid to 10 mL of the LPC stock solution (Sect. 7.10) and diluting to the mark with deionized, distilled water. Transfer the LPC to a screwcap Teflon FEP storage bottle (Sect. 6.2.3).

Analyte	Calibration Check Std. Conc., µg/mL
Al	1.0
As	1.0
Be	1.0
Ca	2.0
Cd	1.0
Cr	1.0
Cu	1.0
Fe	1.0
K	10.0
Mg	2.0
Na	2.0
Ni	1.0
P	10.0
Pb	1.0
Sb	1.0
Se	1.0
Tl	1.0
Zn	1.0

7.11 Prepare the laboratory fortifying stock solution in a 200-mL volumetric flask by combining the following listed aliquot volumes of the individual stock solution and diluting to the mark with deionized, distilled water. Transfer the laboratory fortifying stock solution to a screwcap Teflon FEP storage bottle (Sect. 6.2.3).

Analyte	Stock Solution	Aliquot Vol., mL	Analyte Conc., µg/mL
AL	7.6.1	10.0	50
As	7.6.3	10.0	50
Be	7.6.4	1.0	2.5
Cd	7.6.5	1.0	5
Cr	7.6.7	2.0	10
Cu	7.6.8	5.0	25
Ni	7.6.12	5.0	25
Pb	7.6.10	5.0	25
Sb	7.6.2	5.0	25
Se	7.6.15	10.0	50
Tl	7.6.17	5.0	25
Zn	7.6.18	10.0	50

7.12 Prepare an instrument wash acid solution by diluting 50 mL of conc. nitric acid to 1 L with deionized, distilled water. Store in a convenient manner. This solution is to be used to flush the solution uptake system and nebulizer between standards and samples.

8. SAMPLE COLLECTION, PRESERVATION AND STORAGE

8.1 Fish samples are collected using a variety of equipment, methods and techniques such as trot lines, trawls, seines, dredges, nets, ichthyocides and electrofishing. The technique used must be free from contamination by metals. For example, permanganate may be used to detoxify Rotenone but should not come in contact with the fish to be analyzed.[6]

8.2 Appropriate individual tissue samples should be taken soon after collection of the fish and must be taken prior to freezing.[7] If dissection of the tissue cannot be performed immediately after collection, each fish should be placed in a plastic bag (Sect. 6.1.5), sealed and placed on ice or refrigerated at approximately 4°C.

8.3 Prior to dissection, the fish should be rinsed with metal-free water and blotted dry. Dissection should be performed within 24 h of collection. Each individual fillet sample should also be rinsed with metal-free water, blotted dry, placed in a preweighed, labeled polysulfone centrifuge tube (Sect. 6.2.2) and frozen at ≤-20°C (dry ice).

8.4 Skinless fillet samples of approximately 1-2 g (1 cm x 0.5 cm x 2 cm) should be cut from the fish using a special implement (Sect. 4.1) and handled with plastic forceps (Sect. 6.1.2).[8,9]

8.5 A maximum holding time for frozen samples has not been determined.

9. CALIBRATION AND STANDARDIZATION

9.1 Specific wavelengths and background correction locations given in Table 1 and instrument operating conditions given in Table 2 should be used whenever possible. However, because of the difference among various makes and models of spectrometers, the analyst should follow the instrument manufacturer's instructions in adapting the instrument's operation to approximate the recommended operating conditions. Other wavelengths and background correction locations may be substituted if they can provide the needed sensitivity and are corrected for spectral interference.

9.2 Allow the instrument to become thermally stable before beginning. This usually requires at least 30 min of operation prior to calibration.

9.3 Optically profile the instrument and adjust the plasma to a previously established condition by regulating the argon flow rate through the nebulizer while monitoring the intensity ratio of selected atom/ion wavelengths [e.g., Cu (I) 324.75 nm/Mn (II) 257.61 nm].

9.4 Calibrate the instrument according to the instrument manufacturer's instructions using the prepared calibration blank (Sect. 7.9) and CAL solutions (Sect. 7.8).

9.5 The following operational steps should be used for both CAL solutions and samples.

9.5.1 Using a peristalic pump introduce the standard or sample to nebulizer at a uniform rate (e.g., 1.2 mL/min.$^{-1}$).

9.5.2 To allow equilibrium to be reached in the plasma, aspirate the standard or sample solution for 30 sec after reaching the plasma before beginning integration of the background corrected signal.

9.5.3 Use the average value of four 4 sec background corrected integration periods as the atomic emission signal to be correlated to analyte concentration.

9.5.4 Between each standard or sample, flush the nebulizer and solution uptake system with the wash acid solution (Sect. 7.12) for 60 sec or for the required period of time to ensure that analyte memory effects are not occurring.

9.6 Analyze the LPC solution (Sect. 7.10.1) and calibration blank (Sect. 7.9) immediately following calibration, at the end of the analyses and periodically throughout the sample run. The analyzed value of the LPC solution should be within an interval of 95% to 105% of the expected value. If the value is outside the interval, the instrument should be recalibrated and all samples following the last acceptable LPC solution should be reanalyzed.

10. QUALITY CONTROL

10.1 Each laboratory using this method is required to operate a formal quality control (QC) program. The minimum requirements of this program consist of an initial demonstration of laboratory capability and the analysis of reagent blanks, fortified blanks and samples as a continuing check on performance. The laboratory is required to maintain performance records that define the quality of data thus generated.

10.2 INITIAL DEMONSTRATION OF PERFORMANCE

10.2.1 Initial demonstration of performance is used to characterized instrument and laboratory performance, (method detection limits and quality control verification) for analyses conducted by this method.

10.2.2 When beginning the use of this method and on a quarterly basis, verify acceptable laboratory performance with the preparation and analyses of a quality control sample (QCS)

(Sect. 3.13). The QCS is carried through the entire analytical operation of the method. If the determined concentrations are not within ± 5% stated values of 1 mg/L, laboratory performance is unacceptable. The source of the problem should be identified and corrected before continuing the analyses.

10.2.3 Method detection limit (MDL) (Sect. 3.2) in μg/g must be determined for each of the following analytes: Al, As, Be, Cd, Cr, Cu, Ni, Pb, Sb, Se, Tl, and Zn. Except for As, Cu and Zn, the MDLs for all analytes must be determined in the fish tissue matrix. Because of background concentrations in fish tissue, MDLs for As, Cu and Zn should be determined by fortifying and analyzing the LRB (Sect. 3.5) matrix. The MDL determinations should be made using seven replicate samples prepared as described in the procedure (Sect. 11.). The concentration of the fortified analyte in the sample should be approximately three times the estimated detection limit. The determined MDL values tested in Table 1 can be used as a guide. (Actual solution concentration in μg/mL are 10% of the listed values). Appropriate dilutions of the laboratory fortifying stock solution (Sect. 7.11) may be used to determine MDL.

Calculate the MDL as follows:

$$MDL = (t) \times (S)$$

where, t = Student's t value for a 99% confidence level and a standard deviation estimate with n-1 degrees of freedom [t = 3.14 for seven replicates].

S = standard deviation of the replicate analyses.

MDLs should be determined yearly or whenever there is a significant change in background or instrument response.

10.3 ASSESSING LABORATORY PERFORMANCE - REAGENT AND FORTIFIED BLANKS

10.3.1 A laboratory reagent blank (LRB) (Sect. 3.5) is to be analyzed with each group of samples. LRB data are used to assess contamination from the laboratory environment and to characterize spectral background from reagents used in sample processing. Prepare the LRB by transferring 1.0 mL TMAH (Sect. 7.4) to a clean preweighed, labeled 30-mL polysulfone Oak Ridge type centrifuge tube (Sect. 6.2.3). Carry the blank through the entire procedure (Sect. 11) as a 1.0 g sample ending with a final solution volume of 10 mL. If the value for one or more of the following

metals: Al, As, Be, Cd, Cr, Cu, Ni, Pb, Sb, Se, Tl, and Zn exceeds its determined MDL or established control limits, then laboratory or reagent contamination should be suspected and attention should be given to the cleaning procedure and the purity of the reagents should be verified. The source of contamination should be corrected before completing additional analyses.

10.3.2 A field reagent blank (FRB) (Sect. 3.6) that accompanies each group of samples is to be analyzed in the same manner as the LRB. Its purpose is to monitor sample collection and storage condition. Criteria for rejection of analyses data based on FRB data have not been determined.

10.3.3 A laboratory fortified blank (LFB) (Sect. 3.8) is to be analyzed with each group of samples. The LFB should contain the following metals: Al, As, Be, Cd, Cr, Cu, Ni, Pb, Sb, Se, Tl, and Zn. To prepare the LFB, pipet 0.1 mL of the laboratory fortifying stock solution (Sect. 7.11) into a clean preweighed, labeled 30-mL polysulfone Oak Ridge type centrifuge tube (Sect. 6.2.2). Add 1 mL of TMAH (Sect. 7.4) and carry the LFB through the entire procedure (Sect. 11) as a sample ending with a final volume of 10 mL. The analyzed values should be within ± 2 standard deviations of an established mean value determined from seven prior replicate analyses. (Data in Table 3 may be used as a guide until a sufficient number of replicates have been determined.) If an analyzed value is greater than ± 2 standard deviations, it is outside the warning limits. If it is greater than ± 3 standard deviations, the analysis is judged to be out of control. When this is the case, take appropriate steps to identify and resolve the problems before continuing with the analyses.

10.4 ASSESSING ANALYTE RECOVERY - LABORATORY FORTIFIED SAMPLE MATRIX

10.4.1 To demonstrate analyte recovery from the tissue matrix prepare and analyze a laboratory fortified matrix sample (LFM) (Sect. 3.9) for each type of tissue under analysis. Select one fish from each group of ≤ 20 samples and at the time of dissection collect two adjacent fillet or tissue aliquots of nearly equal size (1 g). To one of the aliquots add 0.1 mL of the laboratory fortifying stock solution (Sect. 7.11). Carry both aliquots through the entire procedure (Sect. 11).

10.4.2 Calculate the percent recovery for each analyte, corrected for background concentrations measured in the unfortified aliquot, and compare theses values to the control limits established in Sect. 10.3.3 for the analyses of LFBs.

Percent recovery may be calculated in units appropriate to the matrix, using the following equation:

$$R = \frac{(C_F - C) \times 100}{F}$$

where, R = percent recovery.
C_F = fortified sample concentration
C = sample background concentration
F = concentration equivalent of analyte added to sample

10.4.3 If the recovery of any analyte in the LFM falls outside the designated range and the laboratory performance for that analyte is shown to be in control (Sect. 10.3), the recovery problem encountered with the fortified sample is judged to be matrix related, not system related. See Sect. 13.4 and Table 5 for typical recovery data.

11. PROCEDURE

11.1 At the start of sample processing, remove the cap from the preweighed, labeled centrifuge tube (Sect. 6.2.2) containing the sample and reweigh the tube to determine the weight of the tissue by difference. This can be done using the analytical balance (Sect. 6.3.5). Wipe the outside of the centrifuge tube with a Kimwipe or suitable paper tissue and place the tube horizontally on the pan. The weight of the tissue should be between 1 and 2 g and expressed to the nearest 10 mg. Record the tissue weight.

11.2 Using a 2-mL graduated pipet or an air displacement pipetter (Sect. 6.3.1), add a volume of 25% tetramethylammonium hydroxide (TMAH) (Sect. 7.4) equal to the weight of the tissue (1 mL TMAH = 1 g tissue). The aliquot of TMAH should be to the nearest tenth of a milliliter equal to the tissue weight (e.g., 1.6 mL of TMAH for 1.62 g of tissue). With the TMAH added, replace and tighten the cap securely. (This will minimize the odor caused in heating the sample mixture.) Place the sample in an open rack for adequate heating and place the rack in a drying oven preheated to 65°C ± 5°C and warm the sample for 1 h.

11.3 After an hour of heating, remove the sample from the oven, retighten the cap if loose, and mix the sample for a few seconds using a vortex mixer (Sect. 6.3.6) set at medium power setting. Return the sample to the drying oven and heat for an additional hour.

11.4 After the second hour of heating, again vortex mix the sample and allow the capped sample to stand overnight at room temperature.

11.5 The following morning, acidify the sample with conc. nitric acid (Sect. 7.2) to between 4% and 5% (v/v) acid. The volume of nitric acid added to each sample is based on the final volume of sample. The final sample volume is calculated by multiplying the wet tissue weight by 10. Using a 1-mL graduated pipet or an air displacement pipetter (Sect. 6.3.1), add the appropriate volume of nitric acid as indicated in the following table:

Weight of Tissue, g	Final Sample Volume, mL	Volume of Conc. HNO_3 Added, mL
0.80 - 1.04	8 to 10	0.4
1.05 - 1.24	10 to 12	0.5
1.25 - 1.44	12 to 14	0.6
1.45 - 1.64	14 to 16	0.7
1.65 - 1.84	16 to 18	0.8
1.85 - 2.04	18 to 20	0.9
2.05 - 2.24	20 to 22	1.0

After the acid addition, recap the tube and lightly vortex mix the sample. Place the tube to the drying oven preheated to 100°C and heat the sample for an hour to solubilize the metals before proceeding. Note: After the acid is added, solids will fall out of solution and a precipitate will form. This is normal and to be expected.

11.6 After the period of solubilization, cool the tube to room temperature. Uncap the tube and place the tube on the single pan balance (Sect. 6.3.4) in a tared 100-mL Griffin beaker. Adjust the final volume of the sample by adding deionized, distilled water from a "squeeze" wash bottle (Sect. 6.2.4) while weighing the tube to an appropriate weight to maintain the constant weight/volume ratio of 1 g/10 mL. The appropriate weight is calculated by multiplying the wet tissue weight by 10 and adding the product to the recorded weight of the empty tube.

11.7 After dilution is completed, recap the tube and vortex mix the sample. After mixing, centrifuge (Sect. 6.3.7) the sample at 2000 rpm. for 10 min. After centrifuging, the sample may contain floatable solids as a surface layer as well as the precipitate. Also, some particles may adhere to the wall of the tube. This condition is normal and should not cause concern unless the analysis solution actually contains suspended material. The sample is now ready for analysis. Analyze the sample within 24 h of preparation (Sect. See 4.2).

11.8 Aspirate the sample into the ICP using the same operating conditions used in calibration (Sect. 9) while making certain the precipitate is not disturbed and inadvertently aspirated. If the surface of the analysis solution is partially covered with floatable solids, proceed by removing the tip of the aspiration tube from the wash solution (Sect. 7.12) and allow an air bubble

segment to form in the sample uptake line. Reverse the pump flow and, while back pumping the air bubble, insert the aspiration tube past the floatable solids into the sample solution. Change the pump flow back to uptake direction and aspirate the sample.

12. CALCULATIONS

12.1 If dilutions are performed, the appropriate factor must be applied to sample values.

12.2 Data read from the instrument in µg/mL should be rounded to the thousandth place.

12.3 Subtract the LFB where appropriate (Sect. 4.4).

12.4 To express the data in concentrations of µg/g wet tissue weight multiply the rounded net µg/mL data by a factor of 10.

12.5 Report µg/g wet tissue weight data up to three significant figures.

12.6 Do not report data below the determined MDL.

13. PRECISION AND ACCURACY

13.1 The precision and recovery data presented in this method are single laboratory verification data only. The data were collected utilizing the recommended instrument conditions described in the method.

13.2 The precision and recovery data presented in Table 3 are for the LFB concentrations recommended in this method. The data can be used as a guide for quality control limits (Sect. 10.3) until the time the method user establishes actual limits.

13.3 The comparative data for the four types of fish fillets (bluegill, catfish, salmon, and tuna) presented in Table 4 are for verification of version 2.0 of this method. In addition to version 2.0, data are included for the former version 1.3[10] of this method, which incorporated the use of 50% hydrogen peroxide and a vigorous acid digestion procedure that utilizes nitric acid and hydrogen peroxide with the digestate finally being diluted in 5% (v/v) hydrochloric acid. The analytes listed are those naturally occurring elements in fish tissue plus Ni found in the salmon and the Cd and Se found in the tuna. The purpose of the comparison is to demonstrate the effectiveness and usefulness of the TMAH solubilization. For each type of fish all fillets were taken from the same fish. Except as noted in the table, Method 200.11 mean data for the analytes: As, Cd, Cu, Ni, Se and Zn are from the analyses of four replicate fillets while the mean data for Ca, Fe, K, Mg, Na and P are from the analyses of eight replicate fillets.

The acid digestion mean data for all analytes are from the analyses of four replicate fillets. The catfish, salmon and tuna data for version 2.0 of Method 200.11 were statistically compared to version 1.3 data and the acid digestion data. The comparison was made using a two tail Student's t test at alpha level 0.05. If a statistical difference was determined, the data were tested for practical difference by determining the relative percent difference between the two means. If the relative percent difference was 10% or less, it was concluded that there is no practical difference between the methods. Listed in Sect. 13.3.1 are the relative percent differences for version 1.3 data and in Sect. 13.3.2 the relative percent differences for the acid digestion data for those analytes where a statistical difference was proven. The large difference for the salmon data between version 2.0 and 1.3 cannot be explained. At present, the differences are attributed to the individual fish used in the comparison. This was concluded from analyses of other fillet segments from the same fish that indicated good agreement between the two versions but gave extremely elevated concentrations for Cu - 3 µg/g, Fe - 18 µg/g and Zn - 8 µg/g.

13.3.1 RELATIVE PERCENT DIFFERENCES - VERSION 1.3

ANALYTE	FISH TISSUE	RELATIVE DIFFERENCE
Fe	Salmon	37%
K	Salmon	21%
Mg	Salmon	18%
Na	Salmon	30%
P	Salmon	14%
P	Tuna	6%
Zn	Salmon	19%

13.3.2 RELATIVE PERCENT DIFFERENCES - ACID DIGESTION

ANALYTE	FISH TISSUE	RELATIVE DIFFERENCE
As	Catfish	50%
As	Salmon	82%
Cu	Catfish	12%
K	Tuna	11%
Mg	Tuna	10%
Na	Salmon	27%
P	Catfish	6%
P	Tuna	14%

13.4 The precision and recovery data for the four types of fish fillets (bluegill, catfish, salmon, and tuna) presented in Table 5 are from the analyses of four replicate LFMs taken from the same fish and fortified with the same concentrations as the LFB replicates listed in Table 3. Sample concentration subtracted before calculation of percent recovered were mean values taken from Table 4. Except for

Sb, which shows consistently low recovery, all other analytes have recoveries that range from 90 to 112% with an average of 101% and RSD values that range from 0.7 to 10.7% with an average of 3.7%, only slightly higher than the LFB average of 3.1% calculated from Table 3 values.

13.5 Table 6 lists the mean, standard deviation, relative standard deviation, and percent recovery data from the analysis of four, 0.25 g aliquots of dried NBS SRM 1566 Oyster Tissue. Data from the analyses of reference material are included for support of the procedure. Except for Cr and Fe, all recovery data are between 90 and 110%.

14. REFERENCES

1. Code of Federal Regulations 40, Ch. 1, Pt. 136 Appendix B.

2. Gross, S. B., and E. S. Parkinson, "Analyses of Metals in Human Tissues Using Base (TMAH) Digests and Graphite Furnace Atomic Absorption Spectrophotometry," Atomic Absorption Newsletter, Vol. 13, No. 4, pp. 107-108, 1974.

3. Murthy, L., E. E. Menden, P. M. Eller, and H. G. Petering, "Atomic Absorption Determination of Zinc, Copper, Cadmium and Lead in Tissues Solubilized by Aqueous Tetramethylammonium Hydroxide," Analytical Biochemistry, Vol. 53, pp. 365-372, 1973.

4. Versieck, J., and F. Barbier, "Sample Contamination as A Source of Error in Trace-Element Analysis of Biological Samples," Talanta, Vol. 29, pp. 973-984, 1982.

5. Annual Book of ASTM Standards, Volume 11.01, American Society for Testing and Materials, 1916 Race St., Philadelphia, Pennsylvania, 19103.

6. Standard Methods for the Examination of Water and Wastewater, 16th Edition, 1985. Part 1006; "Fish: Sample Collection and Preservation."

7. Ney, J. J., and M. G. Martin, "Influences of Prefreezing on Heavy Metal Concentrations in Bluegill Sunfish," Water Res., Vol. 19, No. 7, pp. 905-907, 1985.

8. "The Pilot National Environmental Specimen Bank," NBS Special Publication 656, U. S. Department of Commerce, August, 1983.

9. Koirtyohann, S. R., and H. C. Hopps, "Sample Selection, Collection, Preservation and Storage for Data Bank on Trace Elements in Human Tissue," Federation Proceedings, Vol. 40, No. 8, June, 1981.

10. Method 200.11, "Determination of Metals in Fish Tissue by Inductively Coupled Plasma-Atomic Emission Spectrometry," Revision 1.3, April 1987. U.S. Environmental Protection Agency, Office of Research and Development, Environmental Monitoring and Support Laboratory, Cincinnati, Ohio 45268.

TABLE 1. RECOMMENDED WAVELENGTHS WITH LOCATIONS FOR BACKGROUND CORRECTION AND METHOD DETECTION LIMITS (MDL)

Analyte	Wavelength, [1] nm	Location for Bkgd. Correction	MDL, µg/g Wet Tissue Weight
Al	308.215	+ 0.061 nm	0.3
As	193.696	+ 0.061 nm	0.4*
Be	313.042	- 0.061 nm	0.02
Ca	315.887	+ 0.061 nm	-
Cd	226.502	+ 0.061 nm	0.02
Cr	205.552 X 2	- 0.030 nm	0.05
Cu	324.754	- 0.061 nm	0.05*
Fe	259.940	+ 0.061 nm	-
K	766.491	- 0.061 nm	-
Mg	279.079	- 0.061 nm	-
Na	588.995	+ 0.061 nm	-
Ni	231.604 X 2	- 0.030 nm	0.08
P	214.914 X 2	+ 0.030 nm	-
Pb	220.353	+ 0.061 nm	0.2
Sb	206.883	+ 0.061 nm	0.2
Se	196.026	- 0.061 nm	0.6
Tl	190.864	+ 0.061 nm	0.5
Zn	213.856 X 2	+ 0.030 nm	0.07*

(1) Wavelength X 2 indicates wavelength is read in second order.
(*) MDL determined in LRB matrix.

TABLE 2. INDUCTIVELY COUPLED PLASMA INSTRUMENT OPERATING CONDITIONS

Forward rf power	1100 watts
Reflected rf power	< 5 watts
Viewing height above work coil	16 mm
Argon supply	Liquid argon
Argon pressure	40 psi
Coolant argon flow rate	19 L/min
Aerosol carrier argon flow rate	630 mL/min
Auxillary (plasma) argon flow rate	300 mL/min
Sample uptake rate controlled to	1.2 mL/min

TABLE 3. PRECISION AND RECOVERY OF DATA LABORATORY FORTIFIED BLANK

Concentration, μg/g

Analyte	Theo Value	Analysis Mean (1)	Std Dev	RSD	Percent Recovered
Al	5.00	4.94	0.14	2.8%	99%
As	5.00	5.11	0.13	2.5%	102%
Be	0.25	0.26	0.01	3.7%	104%
Cd	0.50	0.52	0.01	1.9%	104%
Cr	1.00	1.02	0.04	3.9%	102%
Cu	2.50	2.57	0.07	2.7%	103%
Ni	2.50	2.55	0.08	3.1%	102%
Pb	2.50	2.51	0.09	3.6%	100%
Sb	2.50	2.42	0.22	9.1%	97%
Se	5.00	5.05	0.16	3.2%	101%
Tl	2.50	2.48	0.09	3.6%	99%
Zn	5.00	5.01	0.13	2.6%	100%

(1) Data from seven replicate determinations

TABLE 4. COMPARATIVE METHODS DATA

Concentration, $\mu g/g$ Wet Tissue Weight

Fish Tissue - Bluegill Fillet

Analyte	Method 200.11 Version 2.0 Mean	Method 200.11 Version 2.0 Std Dev	Method 200.11 Version 1.3 Mean (1)	Method 200.11 Version 1.3 Std Dev	Acid Digestion HNO_3/H_2O_2 Mean (1)	Acid Digestion HNO_3/H_2O_2 Std Dev
As	1.08	0.13	1.03	--	0.39	--
Ca	141	37	131	--	134	--
Cu	0.18	0.03	0.15	--	0.22	--
Fe	1.57	0.18	1.48	--	1.69	--
K	4690	300	4870	--	4140	--
Mg	346	23	370	--	340	--
Na	216	36	247	--	235	--
P	2640	200	2700	--	2370	--
Zn	4.74	0.07	4.88	--	4.77	--

(1) Data from duplicate analyses, standard deviations not provided

Fish Tissue - Catfish Fillet

Analyte	Method 200.11 Version 2.0 Mean	Method 200.11 Version 2.0 Std Dev	Method 200.11 Version 1.3 Mean	Method 200.11 Version 1.3 Std Dev	Acid Digestion HNO_3/H_2O_2 Mean	Acid Digestion HNO_3/H_2O_2 Std Dev
As	0.45	0.10	0.47	0.14	0.20	0.06
Ca	110	5	111	15	123	2
Cu	0.33	0.09	0.35	0.10	0.31	0.01
Fe	2.01	0.30	1.95	0.23	2.38	0.53
K	3400	240	3260	370	3640	70
Mg	244	16	238	38	230	7
Na	460	17	464	19	467	6
P	1840	90	1750	200	1950	30
Zn	5.68	0.58	6.02	1.07	5.67	1.68

TABLE 4. COMPARATIVE METHODS DATA (Continued)

Concentration, μg/g Wet Tissue Weight

Fish Tissue - Salmon Fillet

Analyte	Method 200.11 Version 2.0 Mean	Method 200.11 Version 2.0 Std Dev	Method 200.11 Version 1.3 Mean	Method 200.11 Version 1.3 Std Dev	Acid Digestion HNO_3/H_2O_2 Mean	Acid Digestion HNO_3/H_2O_2 Std Dev
As	0.79	0.03	0.84	0.13	0.41	0.07
Ca	118	14	98	28	114	27
Cu	0.70	0.05	0.69	0.06	0.57	0.13
Fe	3.12	0.55	2.15	0.25	3.16	0.48
K	3160	180	280	90	3110	360
Mg	233	10	280	7	229	27
Na	653	64	481	22	496	66
Ni	0.09	0.04	0.07*	0.04	0.07	0.03
P	2090	100	2410	90	2000	160
Zn	4.37	0.40	3.60	0.30	3.72	0.46

*Data below MDL, normally not reported - listed only for comparison

Fish Tissue - Tuna Fillet

Analyte	Method 200.11 Version 2.0 Mean	Method 200.11 Version 2.0 Std Dev	Method 200.11 Version 1.3 Mean	Method 200.11 Version 1.3 Std Dev	Acid Digestion HNO_3/H_2O_2 Mean(1)	Acid Digestion HNO_3/H_2O_2 Std Dev
As	3.01	0.45	3.29	0.15	2.83	0.39
Ca	33.4	3.7	37.0	6.5	37.8	7.8
Cd	0.020	0.006	0.020	0.006	0.025	0.003
Cu	0.23	0.10	0.22	0.04	0.11	0.04
Fe	6.14	1.51	5.15	1.01	7.33	1.08
K	4640	110	4530	160	4140	120
Mg	384	8	373	13	347	10
Na	328	35	360	34	342	39
P	3060	50	2890	80	2670	90
Se	0.95	0.22	0.73	0.05	N.D.<0.8	
Zn	3.12	0.24	2.83	0.09	2.90	0.23

(1) N.D. - Not detected below MDL

TABLE 5. PRECISION AND RECOVERY DATA

Concentration, μg/g Wet Tissue Weight

Fish Tissue - Bluegill Fillet

Analyte	Sample Conc.	Conc. Added	Analysis Mean	Std Dev	RSD	Percent Recovery
Al	-	5.00	5.06	0.15	3.0%	101%
As	1.08	5.00	6.41	0.32	5.0%	107%
Be	-	0.25	0.28	0.012	4.3%	112%
Cd	-	0.50	0.52	0.018	3.5%	104%
Cr	-	1.00	1.03	0.03	2.9%	103%
Cu	0.18	2.50	2.74	0.10	3.6%	102%
Ni	-	2.50	2.65	0.10	3.8%	106%
Pb	-	2.50	2.57	0.19	7.4%	103%
Sb	-	2.50	2.27	0.15	6.6%	91%
Se	0.54*	5.00	5.58	0.19	3.4%	112%
Tl	-	2.50	2.56	0.07	2.7%	102%
Zn	4.74	5.00	9.77	0.45	4.6%	101%

*Data below MDL, reported for explanation of elevated LFM

Fish Tissue - Catfish Fillet

Analyte	Sample Conc.	Conc. Added	Analysis Mean	Std Dev	RSD	Percent Recovery
Al	-	5.00	4.94	0.16	3.2%	99%
As	0.45	5.00	5.50	0.07	1.3%	101%
Be	-	0.25	0.26	0.005	1.9%	104%
Cd	-	0.50	0.49	0.008	1.6%	98%
Cr	-	1.00	0.98	0.02	2.0%	98%
Cu	0.33	2.50	2.85	0.04	1.4%	101%
Ni	-	2.50	2.42	0.10	4.1%	97%
Pb	-	2.50	2.43	0.10	4.1%	97%
Sb	-	2.50	2.09	0.07	3.3%	84%
Se	-	5.00	4.60	0.40	8.7%	92%
Tl	-	2.50	2.43	0.16	6.6%	97%
Zn	5.68	5.00	11.0	1.18	10.7%	106%

TABLE 5. PRECISION AND RECOVERY DATA (Continued)

Concentration, µg/g Wet Tissue Weight

Fish Tissue - Salmon Fillet

Analyte	Sample Conc.	Conc. Added	Analysis Mean	Std Dev	RSD	Percent Recovery
Al	-	5.00	4.67	0.23	4.9%	93%
As	0.79	5.00	5.59	0.13	2.3%	96%
Be	-	0.25	0.25	0.002	0.8%	100%
Cd	-	0.50	0.47	0.015	3.2%	94%
Cr	-	1.00	0.93	0.03	3.2%	93%
Cu	0.70	2.50	3.20	0.12	3.8%	100%
Ni	0.09	2.50	2.41	0.11	4.6%	93%
Pb	-	2.50	2.38	0.09	3.8%	95%
Sb	-	2.50	2.01	0.15	7.4%	80%
Se	-	5.00	5.05	0.28	5.5%	101%
Tl	-	2.50	2.36	0.90	3.8%	94%
Zn	4.37	5.00	8.85	0.62	7.0%	90%

Fish Tissue - Tuna Fillet

Analyte	Sample Conc.	Conc. Added	Analysis Mean	Std Dev	RSD	Percent Recovery
Al	-	5.00	5.09	0.60	1.2%	102%
As	3.01	5.00	8.29	0.53	6.4%	106%
Be	-	0.25	0.28	0.003	1.1%	112%
Cd	0.02	0.50	0.54	0.024	4.4%	104%
Cr	-	1.00	0.99	0.01	1.0%	99%
Cu	0.23	2.50	2.74	0.02	0.7%	100%
Ni	-	2.50	2.56	0.06	2.3%	102%
Pb	-	2.50	2.57	0.08	3.1%	103%
Sb	-	2.50	2.00	0.11	5.5%	80%
Se	0.95	5.00	6.33	0.27	4.3%	108%
Tl	-	2.50	2.70	0.13	3.7%	108%
Zn	3.12	5.00	7.99	0.20	2.5%	97%

TABLE 6. ANALYSES DATA - NBS SRM 1566 OYSTER TISSUE

Concentration, μg/g Dry Weight

Analyte	Certified Value	Analysis Mean (1)	Std Dev	RSD	Percent Recovered
As	13.4 ± 1.9	14.6	0.2	1.5%	109%
Ca	1500 ± 200	1560	80	5.1%	104%
Cd	3.5 ± 0.4	3.39	0.05	1.5%	97%
Cr	0.69 ± 0.27	N.D.<0.02	-	-	-
Cu	63.0 ± 3.5	63.0	1.5	2.4%	100%
Fe	195 ± 34	128	16	13%	66%
K	9690 ± 50	9860	50	0.5%	102%
Mg	1280 ± 90	1270	30	2.4%	99%
Na	5100 ± 300	4790	110	2.3%	94%
Ni	1.03 ± 0.19	1.28	0.41	32%	124%
P	8100*	7360	180	2.4%	94%
Pb	0.48 ± 0.04	N.D.<0.8	-	-	-
Se	2.1 ± 0.5	N.D.<2.4	-	-	-
Zn	852 ± 14	832	5	0.6%	98%

(1) N.D. - Not detected below MDL

*Phosphorus value not certified

METHOD 218.6

DETERMINATION OF DISSOLVED HEXAVALENT CHROMIUM IN DRINKING WATER, GROUNDWATER, AND INDUSTRIAL WASTEWATER EFFLUENTS BY ION CHROMATOGRAPHY

Elizabeth J. Arar, Stephen E. Long
Technology Applications, Inc.

and

John D. Pfaff
Inorganic Chemistry Branch
Chemistry Research Division

Revision 3.2
April 1991

ENVIRONMENTAL MONITORING SYSTEMS LABORATORY
OFFICE OF RESEARCH AND DEVELOPMENT
U.S. ENVIRONMENTAL PROTECTION AGENCY
CINCINNATI, OHIO 45268

METHOD 218.6

DETERMINATION OF DISSOLVED HEXAVALENT CHROMIUM IN DRINKING WATER, GROUNDWATER, AND INDUSTRIAL WASTEWATER EFFLUENTS BY ION CHROMATOGRAPHY

1. SCOPE AND APPLICATION

1.1 This method provides procedures for determination of dissolved hexavalent chromium in drinking water, groundwater, and industrial wastewater effluents.

1.2 The method detection limits (MDL, defined in Sect. 3) for the above matrices are listed in Table 1. The MDL obtained by an individual laboratory for a specific matrix may differ from those listed depending on the nature of the sample and the instrumentation used.

1.3 Samples containing high levels of anionic species such as sulphate and chloride may cause column overload. Samples containing high levels of organics or sulfides cause rapid reduction of soluble Cr(VI) to Cr(III). Samples must be stored at 4°C and analyzed within 24 h of collection.

1.4 This method should be used by analysts experienced in the use of ion chromatography and the interpretation of ion chromatograms.

2. SUMMARY OF METHOD

2.1 An aqueous sample is filtered through a 0.45-µm filter and the filtrate is adjusted to a pH of 9 to 9.5 with a buffer solution. A measured volume of the sample (50-250 µL) is introduced into the ion chromatograph. A guard column removes organics from the sample before the Cr(VI) as CrO_4^{2-} is separated on an anion exchange separator column. Post-column derivatization of the Cr(VI) with diphenylcarbazide is followed by detection of the colored complex at 530 nm.

3. DEFINITIONS

3.1 DISSOLVED - Material that will pass through a 0.45 µm membrane filter.

3.2 METHOD DETECTION LIMIT (MDL) - The minimum concentration of an analyte that can be identified, measured and reported with 99% confidence that the analyte concentration is greater than zero; it is determined from data produced by analyzing a sample in a given matrix containing analyte[1].

3.3 LINEAR DYNAMIC RANGE - The concentration range over which the analytical working curve remains linear.

3.4 LABORATORY REAGENT BLANK (LRB) - An aliquot of reagent water that is treated exactly like a sample including exposure to all glassware, equipment, solvents, and reagents that are used with samples. The LRB is used to determine if the method analyte is present in the laboratory environment, reagents, or apparatus.

3.5 STOCK STANDARD SOLUTION - A concentrated, certified standard solution of the method analyte. The stock standard solution is used to prepare calibration standards.

3.6 CALIBRATION STANDARD (CAL) - A solution prepared from the stock standard and used to calibrate the instrument response with respect to analyte concentration.

3.7 LABORATORY FORTIFIED BLANK (LFB) - An aliquot of reagent water to which a known quantity of method analyte is added in the laboratory. The LFB is analyzed exactly like a sample, and its purpose is to determine whether the method is within accepted control limits.

3.8 LABORATORY FORTIFIED SAMPLE MATRIX (LFM) - An aliquot of an environmental sample to which a known quantity of method analyte is added in the laboratory. The LFM is analyzed exactly like a sample, and its purpose is to determine whether the sample matrix contributes bias to the analytical result. The background concentration of the analyte in the sample matrix must be determined in a separate aliquot and the measured value in the LFM corrected for the concentration found.

3.9 QUALITY CONTROL SAMPLE (QCS) - A solution containing a known concentration of analyte prepared by a laboratory other than the laboratory performing the analysis. The sample is used to check laboratory performance.

3.10 LABORATORY DUPLICATES (LD) - Two aliquots of the same sample that are treated exactly the same throughout preparative and analytical procedures. Analyses of laboratory duplicates indicate precision associated with laboratory procedures.

3.11 LABORATORY PERFORMANCE CHECK STANDARDS (LPC) - A solution of the analyte prepared in the laboratory by making appropriate dilutions of the stock standard in reagent water. The LPC is used to evaluate the performance of the instrument system within a given calibration curve.

4. INTERFERENCES

4.1 Interferences which affect the accurate determination of Cr(VI) may come from several sources.

4.1.1 Contamination - A trace amount of Cr is sometimes found in reagent grade salts. Since a concentrated buffer solution is used in this method to adjust the pH of samples,

reagent blanks should be analyzed to assess for potential Cr(VI) contamination. Contamination can also come from improperly cleaned glassware or contact of caustic or acidic reagents or samples with stainless steel or pigmented material.

4.1.2 Oxidation of soluble Cr(III) to Cr(VI) can occur in an alkaline medium in the presence of oxidants such as Fe(III) and oxidized Mn or as a result of the aeration that occurs in most extraction procedures[2-5].

4.1.3 Reduction of Cr(VI) to Cr(III) can occur in the presence of reducing species in an acidic medium. At a pH of 6.5 or greater, however, $HCrO_4^-$ is converted to CrO_4^{2-} which is less reactive than the $HCrO_4^-$.

4.1.4 Overloading of the analytical column capacity with high concentrations of anionic species, especially chloride and sulphate, will cause a loss of Cr(VI). The column specified in this method can handle samples containing up to 5% sodium sulphate or 2% sodium chloride[6]. Poor recoveries from fortified samples and tailing peaks are typical manifestations of column overload.

5. SAFETY

5.1 Hexavalent chromium is toxic and a suspected carcinogen and should be handled with appropriate precautions[3,4]. Extreme care should be exercised when weighing the salt for preparation of the stock standard. Each laboratory is responsible for maintaining a current awareness file of OSHA regulations regarding the safe handling of chemicals specified in this method. A reference file of material safety data sheets should also be available to all personnel involved in the chemical analysis[7,8].

6. APPARATUS AND EQUIPMENT

6.1 ION CHROMATOGRAPH

6.1.1 Instrument equipped with a pump capable of withstanding a minimum backpressure of 2000 psi and of delivering a constant flow in the range of 1-5 mL/min and containing no metal parts in the sample, eluent or reagent flow path.

6.1.2 Helium gas supply (High purity, 99.995%).

6.1.3 Pressurized eluent container, plastic, 1- or 2-L size.

6.1.4 Sample loops of various sizes (50-250μL).

6.1.5 A pressurized reagent delivery module with a mixing tee and beaded mixing coil.

6.1.6 Guard Column - A column placed before the separator column and containing a sorbent capable of removing strongly absorbing organics and particles that would otherwise damage the separator column (Dionex IonPac NG1 or equivalent).

6.1.7 Separator Column - A column packed with a high capacity anion exchange resin capable of resolving CrO_4^{2-} from other sample constituents (Dionex IonPac AS7 or equivalent).

6.1.8 A low-volume flow-through cell, visible lamp detector containing no metal parts in contact with the eluent flow path. Detection wavelength is at 530 nm.

6.1.9 Recorder, integrator or computer for receiving analog or digital signals for recording detector response (peak height or area) as a function of time.

6.2 LABWARE - All reusable labware (glass, quartz, polyethylene, Teflon, etc.), including the sample containers, should be soaked overnight in laboratory grade detergent and water, rinsed with water, and soaked for 4 h in a mixture of dilute nitric and hydrochloric acid (1+2+9) followed by rinsing with tap water and ASTM type I water.

NOTE: Chromic acid must not be used for cleaning glassware.

6.2.1 Glassware - Class A volumetric flasks and a graduated cylinder.

6.2.2 Assorted Class A calibrated pipettes.

6.2.3 10-mL male luer-lock disposable syringes.

6.2.4 0.45-μm syringe filters.

6.2.5 Storage bottle - High density polyproplene, 1-L capacity.

6.3 SAMPLE PROCESSING EQUIPMENT

6.3.1 Liquid sample transport containers - High density polypropylene, 125-mL capacity.

6.3.2 Supply of dry ice or refrigerant packing and styrofoam shipment boxes.

6.3.3 pH meter - To read pH range 0-14 with accuracy $\pm$ 0.03 pH units.

6.3.4 0.45-μm filter discs, 7.3-cm diameter (Gelman Acro 50A, Mfr. No. 4262 or equivalent).

6.3.5 Plastic syringe filtration unit (Baxter Scientific, Cat. No. 1240 IN or equivalent).

7. REAGENTS AND CONSUMABLE MATERIALS

7.1 REAGENTS - All chemicals are ACS grade unless otherwise indicated.

7.1.1 Ammonium hydroxide, NH_4OH, (sp.gr. 0.902), (CASRN 1336-21-6).

7.1.2 Ammonium sulphate, $(NH_4)_2SO_4$, (CASRN 7783-20-2).

7.1.3 1,5-Diphenylcarbazide, (CASRN 140-22-7).

7.1.4 Methanol, HPLC grade.

7.1.5 Sulfuric acid, concentrated (sp.gr. 1.84).

7.2 WATER - For all sample preparations and dilutions, ASTM Type I water (ASTM D1193) is required. Suitable water may be obtained by passing distilled water through a mixed bed of anion and cation exchange resins.

7.3 Cr(VI) STOCK SOLUTION - Dissolve 4.501 g of $Na_2CrO_4 \cdot 4H_2O$ in ASTM Type I water and dilute to 1 L. Transfer to a polypropylene storage container.

7.4 LABORATORY REAGENT BLANK (LRB) - Aqueous LRBs can be prepared by adjusting the pH of ASTM type I water to 9-9.5 with the same volume of buffer as is used for samples.

7.5 LABORATORY FORTIFIED BLANK (LFB) - To an aliquot of LRB add an aliquot of stock standard (Sect. 7.3) to produce a final concentration of 100 μg/L of Cr(VI). The LFB must be carried through the entire sample preparation and analysis scheme.

7.6 QUALITY CONTROL SAMPLE (QCS) - A quality control sample must be obtained from an outside laboratory. Dilute an aliquot according to instructions and analyze with samples.

7.7 ELUENT - Dissolve 33 g of ammonium sulphate in 500 mL of ASTM type I water and add 6.5 mL of ammonium hydroxide. Dilute to 1 L with ASTM type I water.

7.8 POST-COLUMN REAGENT - Dissolve 0.5 g of 1,5-diphenylcarbazide in 100 mL of HPLC grade methanol. Add to about 500 mL of ASTM type I water containing 28 mL of 98% sulfuric acid while stirring. Dilute with ASTM type I water to 1 L in a volumetric flask. Reagent is stable for four or five days but should be prepared only as needed.

7.9 BUFFER SOLUTION - Dissolve 33 g of ammonium sulphate in 75 mL of ASTM type I water and add 6.5 mL of ammonium hydroxide. Dilute to 100 mL with ASTM type I water.

8. SAMPLE COLLECTION, PRESERVATION AND STORAGE

8.1 Prior to sample collection, consideration should be given to the type of data required so that appropriate preservation and pretreatment steps can be taken. Filtration and pH adjustment should be performed at the time of sample collection or as soon thereafter as practically possible.

8.2 For determination of dissolved Cr(VI), the sample should be filtered through a 0.45-μm filter. Use a portion of the sample to rinse the syringe filtration unit and filter and then collect the required volume of filtrate. Adjust the pH of the sample to 9-9.5 by adding dropwise a solution of the buffer, periodically checking the pH with the pH meter. Approximately 10 mL of sample are sufficient for three IC analyses.

8.3 Ship and store the samples at 4°C. Bring to ambient temperature prior to analysis. Samples should be analyzed within 24 h of collection.

9. CALIBRATION

9.1 CALIBRATION - Before samples are analyzed a calibration should be performed using a minimum of three calibration solutions that bracket the anticipated concentration range of the samples. Calibration standards should be prepared from the stock standard (Sect. 7.3) by appropriate dilution with ASTM type I water (Sect. 7.2) in volumetric flasks. The solution should be adjusted to pH 9-9.5 with the buffer solution (Sect. 7.9) prior to final dilution.

9.1.1 Establish IC operating conditions as indicated in Table 2. The flow rate of the eluent pump is set at 1.5 mL/min and the pressure of the reagent delivery module adjusted so that the final flow rate of the post column reagent (Sect. 7.8) from the detector is 2.0 mL/min. This requires manual adjustment and measurement of the final flow using a graduated cylinder and a stop watch. A warm up period of approximately 30 min after the flow rate has been adjusted is recommended and the flow rate should be checked prior to calibration and sample analysis.

9.1.2 Injection loop size is chosen based on standard and sample concentrations and the selected attenuator setting. A 250-μL loop was used to establish the method detection limits in Table 1. A 50-μL loop is normally sufficient for higher concentrations. The sample volume used to load the injection loop should be at least 10 times the loop

size so that all tubing in contact with sample is thoroughly flushed with new sample to prevent cross-contamination.

9.1.3 A calibration curve of analyte response (peak height or area) versus analyte concentration should be constructed. The coefficient of correlation for the curve should be 0.999 or greater.

9.2 INSTRUMENT PERFORMANCE - Check the performance of the instrument and verify the calibration using data gathered from analyses of laboratory blanks, calibration standards, and a QCS.

9.2.1 After the calibration has been established, it should be verified by analyzing a QCS (7.6). If the measured value of a QCS exceeds ± 10% of the established value, a second analysis should be performed. If the value still exceeds the established value, the analysis should be terminated until the source of the problem is identified and corrected.

9.2.2 To verify that the instrument is properly calibrated on a continuing basis, run a LRB and a LPC after every ten analyses. The results of analyses of standards will indicate whether the calibration remains valid. If the measured concentration of the analyte deviates from the true concentration by more than ±5%, the instrument must be recalibrated and the previous ten samples reanalyzed. The instrument response from the calibration check may be used for recalibration purposes.

10. QUALITY CONTROL

10.1 Each laboratory using this method is required to operate a formal quality control (QC) program. The minimum requirements of this program consist of an initial demonstration of laboratory capability, and the analysis of laboratory reagent blanks, and fortified blanks and samples as a continuing check on performance. The laboratory is required to maintain performance records that define the quality of the data thus generated.

10.2 INITIAL DEMONSTRATION OF PERFORMANCE

10.2.1 The initial demonstration of performance is used to characterize instrument performance (MDLs and linear calibration range) for analyses conducted by this method.

10.2.2 A MDL should be established using reagent water fortified at a concentration of two-five times the estimated detection limit. To determine the MDL value, take seven replicate aliquots of the fortified reagent water and process through the entire analytical method. Perform all

calculations defined in the method and report the concentration values in the appropriate units. Calculate the MDL as follows:

MDL = (t) X (s)

where: t = Student's t value for a 99% confidence level and a standard deviation estimate with n-1 degrees of freedom [t = 3.143 for seven replicates].

s = standard deviation of the replicate analyses.

10.2.3 Linear dynamic range - Linear dynamic ranges are governed by Beer's Law. A set of at least five standards covering the estimated linear range should be prepared fresh from the stock solution and one analysis of each performed. A log vs. log plot of peak height vs. analyte concentration having a slope between 0.98 and 1.02 will indicate linearity (7). The linear dynamic range for this method covered four orders of magnitude (1 µg/L to 10,000 µg/L) when peak height was used.

10.3 ASSESSING LABORATORY PERFORMANCE - REAGENT AND FORTIFIED BLANKS

10.3.1 The laboratory must analyze at least one LRB (Sect. 7.4) with each set of samples. Reagent blank data are used to assess contamination from a laboratory environment. If the Cr(VI) value in the reagent blank exceeds the determined MDL, then laboratory or reagent contamination should be suspected. Any determined source of contamination should be corrected and the samples reanalyzed.

10.3.2 The laboratory must analyze at least one LFB (Sect. 7.5) with each set of samples. Calculate accuracy as percent recovery (Sect. 10.4.2). If the recovery of Cr(VI) falls outside the control limits (Sect. 10.3.3), then the procedure is judged out of control, and the source of the problem should be identified and resolved before continuing the analysis.

10.3.3 Until sufficient data become available (usually a minimum of 20 to 30 analyses), assess laboratory performance against recovery limits of 90-110%. When sufficient internal performance data becomes available, develop control limits from the percent mean recovery (x) and the standard deviation (s) of the mean recovery. These data are used to establish upper and lower control limits as follows:

UPPER CONTROL LIMIT = x + 3s
LOWER CONTROL LIMIT = x - 3s

10.4 ASSESSING ANALYTE RECOVERY - LABORATORY FORTIFIED SAMPLE MATRIX

10.4.1 The laboratory must add a known amount of Cr(VI) to a minimum of 10% of samples. The concentration level can be the same as that of the laboratory fortified blank (Sect. 7.5).

10.4.2 Calculate the percent recovery for Cr(VI) corrected for background concentration measured in the unfortified sample, and compare this value to the control limits established in Sect. 10.3.3 for the analysis of LFBs. Fortified recovery calculations are not required if the fortified concentration is less than 10% of the sample background concentration. Percent recovery may be calculated in units appropriate to the matrix, using the following equation:

$$R = \frac{C_F - C \times 100}{F}$$

where:

R = percent recovery.
C_F= fortified sample concentration.
C = sample background concentration.
F = concentration equivalent of Cr(VI) added to sample.

10.4.3 If the recovery of Cr(VI) falls outside control limits, while the recovery obtained for the LFB was shown to be in control (Sect. 10.3), the recovery problem encountered with the fortified sample is judged to be matrix related, not system related. The result for Cr(VI) in the unfortified sample must be labelled 'suspect matrix'.

10.5 QUALITY CONTROL SAMPLE (QCS) - Each quarter, the laboratory should analyze one or more QCS (if available). If criteria provided with the QCS are not met, corrective action should be taken and documented.

11. PROCEDURE

11.1 SAMPLE PREPARATION

Filtered, pH adjusted samples at 4°C should be brought to ambient temperature prior to analysis.

11.2 Initiate instrument operating configuration and calibrate (Sect. 9).

11.3 Draw into a new, unused syringe (Sect. 6.2.3) approximately 3 mL of sample and attach a syringe filter to the syringe. Discard 0.5 mL through the filter and load 10X the sample loop volume. Samples

having concentrations higher than the established linear dynamic range should be diluted into the calibration range and reanalyzed.

12. CALCULATIONS

12.1 From the calibration curve the concentration of the sample can be determined. Report values in µg/L. Data should be corrected if any dilution of the sample occured. Data should be corrected for any Cr(VI) contamination found in reagent blanks.

12.2 The QC data obtained during sample analyses provide an indication of the quality of sample data and should be provided with sample results.

13. PRECISION AND ACCURACY

13.1 Instrument operating conditions used for single-laboratory testing of the method are summarized in Table 2. Dissolved Cr(VI) MDLs (Sect. 10.2.2) are listed in Table 1.

13.2 Data obtained from single-laboratory testing of the method are summarized in Table 3 for five water samples representing drinking water, deionized water, groundwater, treated municipal sewage wastewater, and treated electroplating wastewater. Samples were fortified with 100 and 1000 µg/L of Cr(VI) and recoveries determined (Sect. 10.4.2).

14. REFERENCES

1. Glaser, J.A., Foerst, D.L., McKee, G.D., Quave, S.A. and Budde, W.L., "Trace Analyses for Wastewaters", Environ. Sci. and Technol., Vol.15, No.12, 1981, pp.1426-1435.

2. Bartlett, R. and James, B., "Behavior of Chromium in Soils: III. Oxidation", J. Environ. Qual., Vol.8, No.1, 1979, pp.31-35.

3. Zatka, V.J., "Speciation of Hexavalent Chromium in Welding Fumes Interference by Air Oxidation of Chromium", Am. Ind. Hyg. Assoc. J., Vol.46, No.7, 1985, pp.327-331.

4. Pedersen, B., Thomsen, E. and Stern, R.M., "Some Problems in Sampling, Analysis and Evaluation of Welding Fumes Containing Cr(VI)", Ann. Occup. Hyg., Vol.31, No.3, 1987, pp. 325-338.

5. Messman, J.D., Churchwell, M.E., et.al. Determination of Stable Valence States of Chromium in Aqueous and Solid Waste Matrices-Experimental Verification of Chemical Behavior. EPA/600/S4-86/039, U.S. Environmental Protection Agency, Cincinnati, Ohio, 1987, 112pp.

6. Dionex Technical Note No. 26, May 1990.

7. "Proposed OSHA Safety and Health Standards, Laboratories," Occupational Safety and Health Administration, Federal Register, July 24, 1986.

8. "OSHA Safety and Health Standards, General Industry," (29 CFR 1910), Occupational Safety and Health Administration, OSHA 2206, revised January 1976.

9. Johnson, D.C., Anal. Chim. Acta, Vol. 204, No.1, 1988.

TABLE 1. METHOD DETECTION LIMIT FOR CR(VI)

Matrix Type	Conc. Used to Compute MDL µg/L	MDL (a) µg/L
Reagent Water	1	0.4
Drinking Water	2	0.3
Ground Water	2	0.3
Primary Sewage wastewater	2	0.3
Electroplating wastewater	2	0.3

(a) MDL concentrations are computed for final analysis concentration (Sect. 10.2).

TABLE 2. ION CHROMATOGRAPHIC CONDITIONS

Columns:	Guard Column - Dionex IonPac NG1 Separator Column - Dionex IonPac AS7
Eluent:	250 mM $(NH_4)_2SO_4$ 100 mM NH_4OH Flow rate = 1.5 mL/min
Post-Column Reagent:	2mM Diphenylcarbohydrazide 10% v/v CH_3OH 1 N H_2SO_4 Flow rate = 0.5 mL/min
Detector:	Visible 530 nm
Retention Time:	3.8 min

TABLE 3. SINGLE-LABORATORY PRECISION AND ACCURACY

Sample Type	Cr(VI) (μg/L) (a)	Mean Recovery (%)	RPD (b)
Reagent Water	100	100	0.8
	1000	100	0.0
Drinking Water	100	105	6.7
	1000	98	1.5
Groundwater	100	98	0.0
	1000	96	0.8
Primary sewage wastewater effluent	100	100	0.7
	1000	104	2.7
Electroplating wastewater effluent	100	99	0.4
	1000	101	0.4

(a) Sample fortified at this concentration level.
(b) RPD - relative percent difference between duplicates.

METHOD 245.1

DETERMINATION OF MERCURY IN WATER BY COLD VAPOR ATOMIC ABSORPTION SPECTROMETRY

Edited by Larry B. Lobring and Billy B. Potter
Inorganic Chemistry Branch
Chemistry Research Division

Revision 2.3
April 1991

ENVIRONMENTAL MONITORING SYSTEMS LABORATORY
OFFICE OF RESEARCH AND DEVELOPMENT
U.S. ENVIRONMENTAL PROTECTION AGENCY
CINCINNATI, OHIO 45268

METHOD 245.1

DETERMINATION OF MERCURY IN WATER BY COLD VAPOR ATOMIC ABSORPTION SPECTROMETRY

1. SCOPE AND APPLICATION

1.1 This procedure[1] measures total mercury (organic + inorganic) in drinking, surface, ground, sea, brackish, industrial and domestic wastewater.

1.2 The range of the method is 0.2 to 10 μg Hg/L. The range may be extended above or below the normal range by increasing or decreasing sample size or by optimizing instrument sensitivity.

2. SUMMARY OF METHOD

2.1 A 100-mL portion of a water sample is transferred to a BOD bottle (or an equivalent flask fitted with a ground glass stopper). It is digested in diluted potassium permanganate-potasssium persulfate solutions and oxidized for 2 h at 95°C. Mercury in the digested water sample is reduced with stannous chloride to elemental mercury and measured by the conventional cold vapor atomic absorption technique.

3. DEFINITIONS

3.1 BIOCHEMICAL OXYGEN DEMAND (BOD) BOTTLE - BOD bottle, 300 ± 2 mL with a ground glass stopper or an equivalent flask, fitted with a ground glass stopper.

3.2 CALIBRATION BLANK - A volume of ASTM type II reagent water prepared in the same manner (acidified) as the calibration standard.

3.3 CALIBRATION STANDARD (CAL) - A solution prepared from the mercury stock standard solution which is used to calibrate the instrument response with respect to analyte concentration.

3.4 INSTRUMENT DETECTION LIMIT (IDL) - The mercury concentration that produces a signal equal to three times the standard deviation of the blank signal.

3.5 LABORATORY FORTIFIED BLANK (LFB) - An aliquot of ASTM type II reagent water to which known quantities of inorganic and/or organic mercury are added in the laboratory. The LFB is analyzed exactly like a sample, and its purpose is to determine whether method performance is within accepted control limits.

3.6 LABORATORY FORTIFIED SAMPLE MATRIX (LFM) - An aliquot of a water sample to which known quantities of a calibration standard are added

in the laboratory. The LFM is analyzed exactly like a sample, and its purpose is to determine whether the sample matrix contributes bias to the analytical results. The background concentrations of the analytes in the sample matrix must be determined in a separate aliquot and the measured values in the LFM corrected for the concentrations found.

3.7 LABORATORY REAGENT BLANK (LRB) - An aliquot of ASTM type II reagent water that is treated exactly as a sample including exposure to all glassware, equipment, and reagents used in analyses. The LRB is used to determine if method analyte or other interferences are present in the laboratory environment, reagents or apparatus.

3.8 LINEAR DYNAMIC RANGE (LDR) - The concentration range over which the analytical working curve remains linear.

3.9 METHOD DETECTION LIMIT (MDL) - The minimum concentration of mercury that can be identified, measured and reported with 99% confidence that the analyte concentration is greater than zero and determined from analysis of seven LFMs.

3.10 QUALITY CONTROL SAMPLE (QCS) - A water sample containing known concentration of mercury derived from externally prepared test materials. The QCS is obtained from a source external to the laboratory and is used to check laboratory performance.

3.11 WATER SAMPLE - For the purpose of this method, a sample taken from one of the following sources: drinking, surface, ground, sea, brackish, industrial or domestic wastewater.

3.12 STOCK STANDARD SOLUTION - A concentrated mercury solution containing prepared in the laboratory using assayed mercuric chloride or stock standard solution purchased from a reputable commercial source.

4. INTERFERENCES

4.1 Interferences have been reported for waters containing sulfide, chloride, copper and tellurium. Organic compounds which have broad band UV absorbance (around 253.7 nm) are confirmed interferences. The concentration levels for interferants are difficult to define. This suggests that quality control procedures (Sect. 10) must be strictly followed.

4.2 Volatile materials which absorb at 253.7 nm will cause a positive interference. In order to remove any interfering volatile materials, the dead air space in the BOD bottle should be purged before addition of stannous chloride solution.

5. SAFETY

5.1 The toxicity and carcinogenicity of each reagent used in this method has not been fully established. Each chemical should be regarded as

a potential health hazard and exposure to these compounds should be minimized by good laboratory practices[2]. Normal accepted laboratory safety practices should be followed during reagent preparation and instrument operation. Always wear safety glasses or full-face shield for eye protection when working with these reagents. Each laboratory is responsible for maintaining a current safety plan, a current awareness file of OSHA regulations regarding the safe handling of the chemicals specified in this method [3, 4].

5.2 Mercury compounds are highly toxic if swallowed, inhaled, or absorbed through the skin. Analyses should be conducted in a laboratory exhaust hood. The analyst should use chemical resistant gloves when handling concentrated mercury standards.

6. APPARATUS AND EQUIPMENT

6.1 ABSORPTION CELL - Standard spectrophotometer cells 10-cm long, having quartz windows may be used. Suitable cells may be constructed from plexiglass tubing, 1-in. O.D. by 4 1/2-in. long. The ends are ground perpendicular to the longitudinal axis and quartz windows (1-in. diameter by 1/16-in. thickness) are cemented in place. Gas inlet and outlet ports (also of plexiglass but 1/4-in. O.D.) are attached approximately 1/2-in. from each end. The cell is strapped to a burner for support and aligned in the light beam to give the maximum transmittance.

6.2 AERATION TUBING - Inert mercury-free tubing is used for passage of mercury vapor from the sample bottle to the absorption cell. In some systems, mercury vapor is recycled. Straight glass tubing terminating in a coarse porous glass aspirator is used for purging mercury released from the water sample in the BOD bottle.

6.3 AIR PUMP - Any pump (pressure or vacuum system) capable of passing air 1 L/min is used. Regulated compressed air can be used in an open one-pass system.

6.4 ATOMIC ABSORPTION SPECTROPHOTOMETER - Any atomic absorption unit having an open sample presentation area in which to mount the absorption cell is suitable. Instrument settings recommended by the particular manufacturer should be followed. Instruments designed specifically for mercury measurement using the cold vapor technique are commercially available and may be substituted for the atomic absorption spectrophotometer.

6.5 BIOCHEMICAL OXYGEN DEMAND (BOD) BOTTLE - See Sect. 3.1.

6.6 DRYING TUBE - Tube (6-in. x 3/4-in. OD) containing 20 g of magnesium perchlorate. The filled tube is inserted (in-line) between the BOD bottle and the absorption tube. In place of the magnesium perchlorate drying tube, a small reading lamp is positioned to radiate heat (about 10°C above ambient) on the absorption cell. Heat from the lamp prevents water condensation in the cell.

6.7 FLOWMETER - Capable of measuring an air flow of 1 L/min.

6.8 MERCURY HOLLOW CATHODE LAMP - Single element hollow cathode lamp or electrodeless discharge lamp and associated power supply.

6.9 RECORDER - Any multi-range variable speed recorder that is compatible with the UV detection system is suitable.

6.10 WATER BATH - The water bath should have a covered top and capacity to sustain a water depth of 2-in. to 3-in. at 95°C ± 1°C. The dimensions of the water bath should be large enough to accommodate BOD bottles containing CAL, LFB, LFM, LRB, QCS and water samples with the lid on.

7. REAGENTS AND CONSUMABLE MATERIALS

7.1 Reagents may contain elemental impurities which bias analytical results. All reagents should be assayed by the chemical manufacturer for mercury and meet ACS specifications. It is recommended that the laboratory analyst assay all reagents for mercury.

7.1.1 Hydroxylamine Hydrochloride ($NH_2OH \cdot HCl$), (CASRN 5470-11-1) may be used in place of hydroxylamine sulfate (Sect. 7.6); assayed mercury level of compound is not to exceed 0.05 ppm.

7.1.2 Hydroxylamine Sulfate [$(NH_2OH)_2 \cdot H_2SO_4$], (CASRN 10039-54-0); assayed mercury level of compound is not to exceed 0.05 ppm.

7.1.3 Mercuric Chloride ($HgCl_2$), (CASRN 7487-94-7).

7.1.4 Nitric Acid (HNO_3), concentrated (sp.gr. 1.41), (CASRN 7697-37-2); assayed mercury level is not to exceed 1 ppb.

7.1.5 Potassium Permanganate ($KMnO_4$), (CASRN 7722-64-7); assayed mercury level is not to exceed 0.05 ppm.

7.1.6 Potassium Persulfate ($K_2S_2O_8$), (CASRN 7727-21-1); assayed mercury level is not to exceed 0.05 ppm.

7.1.7 Reagent Water, ASTM type II[5].

7.1.8 Sodium Chloride (NaCl), (CASRN 7647-14-5); assayed mercury level is not to exceed 0.05 ppm.

7.1.9 Stannous Chloride ($SnCl_2 \cdot 2H_2O$), (CASRN 10025-69-1); assayed mercury level is not to exceed 0.05 ppm.

7.1.10 Stannous Sulfate, ($SnSO_4$), (CASRN 7488-55-3); assayed mercury level is not to exceed 0.05 ppm.

7.1.11 Sulfuric Acid (H_2SO_4), concentrated (sp.gr. 1.84), (CASRN 7664-93-9); assayed mercury level is not to exceed 1 ppb.

7.2 MERCURY CALIBRATION STANDARD - To each volumetric flask used for serial dilutions, acidify with (0.1 to 0.2% by volume) HNO_3 (Sect. 7.1.4). Using mercury stock standard (Sect. 7.3), make serial dilutions to obtain a concentration of 0.1 μg Hg/mL. This standard should be prepared just before analyses.

7.3 MERCURY STOCK STANDARD - Dissolve in a 100-mL volumetric flask 0.1354 g $HgCl_2$ (Sect. 7.1.3) with 75 mL of reagent water (Sect. 7.1.7). Add 10 mL of conc. HNO_3 (Sect. 7.1.4) and dilute to mark. Concentration is 1.0 mg Hg/mL.

7.4 POTASSIUM PERMANGANATE SOLUTION - Dissolve 5 g of $KMnO_4$ (Sect. 7.1.5) in 100 mL of reagent water (Sect. 7.1.7).

7.5 POTASSIUM PERSULFATE SOLUTION - Dissolve 5 g of $K_2S_2O_8$ (Sect. 7.1.6) in 100 mL of reagent water (Sect. 7.1.7).

7.6 SODIUM CHLORIDE-HYDROXYLAMINE SULFATE SOLUTION - Dissolve 12 g of NaCl (Sect. 7.1.8) and 12 g of $(NH_2OH)_2 \cdot H_2SO_4$ (Sect. 7.1.2) or 12 g of $NH_2OH \cdot HCl$ (Sect. 7.1.1) reagent water (Sect. 7.1.7) to 100 mL.

7.7 STANNOUS CHLORIDE SOLUTION - Add 25 g of $SnCl_2 \cdot 2H_2O$ (Sect. 7.1.9) or 25 g of $SnSO_4$ to 250 mL of 0.5 N H_2SO_4 (Sect. 7.8). This mixture is a suspension and should be stirred continuously during use.

7.8 SULFURIC ACID, 0.5 N - Slowly add 14.0 mL of conc. H_2SO_4 (Sect. 7.1.11) dilute to 1 L with reagent water (Sect. 7.1.7).

8. SAMPLE COLLECTION, PRESERVATION AND STORAGE

8.1 Because of the extreme sensitivity of the analytical procedure and the presence of mercury in a laboratory environment, care must be taken to avoid extraneous contamination. Sampling devices, sample containers and plastic items should be determined to be free of mercury; the sample should not be exposed to any condition in the laboratory that may result in contamination from airborne mercury vapor. All items used in sample preparation should be soaked in 30% HNO_3 (Sect. 7.1.4) and rinsed three times in reagent water (Sect. 7.1.7).

8.2 The water sample should be preserved with HNO_3 (Sect. 7.1.4) to pH $\leq$ 2.

9. CALIBRATION AND STANDARDIZATION

9.1 Transfer 0.5, 1.0, 2.0, 5.0 and 10 mL aliquots of the 0.1 μg/mL CAL (Sect. 7.2) to a series of 300-mL BOD bottles. Dilute standards to

100 mL and process as described in Sect. 11.2. These BOD bottles will contain 0.5 to 1.0 μg of Hg and are used to calibrate the instrument.

9.2 Construct a standard curve by plotting peak height or maximum response of the standards as obtained in Sect. 11.7, versus micrograms of mercury contained in the bottles. The standard curve should comply with Sect. 10.2.3. Calibration using computer or calculator based regression curve fitting techniques on concentration/response data is acceptable.

10. QUALITY CONTROL

10.1 Each laboratory using this method is required to operate a formal quality control (QC) program. The minimum requirements of this program consist of an initial demonstration of laboratory capability by analysis of laboratory reagent blanks, fortified blanks and samples used for continuing check on method performance. Commercially available water quality control samples are acceptable for routine laboratory use. The laboratory is required to maintain performance records that define the quality of the data generated.

10.2 INITIAL DEMONSTRATION OF PERFORMANCE.

10.2.1 The initial demonstration of performance is used to characterize instrument performance (MDLs and linear calibration ranges) for analyses conducted by this method.

10.2.2 A mercury MDL should be established using reagent water (blank) fortified at a concentration of two to five times the estimated detection limit[6]. To determine MDL values, take seven replicate aliquots of the fortified reagent water and process through the entire analytical method. Perform all calculations defined in the method and report the concentration values in the appropriate units. Calculate the MDL as follows:

$$MDL = (t) \times (S)$$

where: t = Student's t value for a 99% confidence level and a standard deviation estimate with n-1 degrees of freedom is, t = 3.14 for seven replicates.

S = standard deviation of the replicate analyses.

A MDL should be determined every six months or whenever a significant change in background or instrument response is expected (e.g., detector change).

10.2.3 Linear calibration ranges - The upper limit of the linear calibration range should be established for mercury by

determining the signal responses from a minimum of three different concentration standards, one of which is close to the upper limit of the linear range. Linear calibration ranges should be determined every six months or whenever a significant change in instrument response is observed.

10.3 ASSESSING LABORATORY PERFORMANCE - REAGENT AND FORTIFIED BLANKS

10.3.1 The laboratory must analyze at least one LRB (Sect. 3.7) with each set of samples. LRB data are used to assess contamination from the laboratory environment and to characterize spectral background from the reagents used in sample processing. If a mercury value in a LRB exceeds its determined MDL, then laboratory or reagent contamination is suspect. Any determined source of contamination should be eliminated and the samples reanalyzed.

10.3.2 The laboratory must analyze at least one LFB (Sect. 3.5) with each batch of samples. Calculate accuracy as percent recovery (Sect. 10.4.2). If recovery of mercury falls outside control limits (Sect. 10.3.3), the method is judged out of control. The source of the problem should be identified and resolved before continuing analyses.

10.3.3 Until sufficient data (usually a minimum of 20 to 30 analyses) become available, each laboratory should assess its performance against recovery limits of 85-115%. When sufficient internal performance data become available, develop control limits from the percent mean recovery (x) and the standard deviation (S) of the mean recovery. These data are used to establish upper and lower control limits as follows:

$$\text{UPPER CONTROL LIMIT} = x + 3S$$
$$\text{LOWER CONTROL LIMIT} = x - 3S$$

After each five to ten new recovery measurements, new control limits should be calculated using only the most recent 20 to 30 data points.

10.4 ASSESSING ANALYTE RECOVERY - LABORATORY FORTIFIED SAMPLE MATRIX

10.4.1 The laboratory must add a known amount of mercury to a minimum of 10% of samples or one sample per sample set, whichever is greater. Select a water sample that is representative of the type of water sample being analyzed which has a low mercury background. It is recommended that this sample be analyzed prior to fortification. The fortification should be 20% to 50% higher than the analyzed value. Over time, samples from all routine sample sources should be fortified.

10.4.2 Calculate the percent recovery, corrected for background concentrations measured in the unfortified sample, and compare these values to the control limits established in Sect. 10.3.3 for the analyses of LFBs. A recovery calculation is not required if the concentration of the analyte added is less than 10% of the sample background concentration. Percent recovery may be calculated in units appropriate to the matrix, using the following equation:

$$R = \frac{C_s - C}{s} \times 100$$

where, R = percent recovery
C_s = fortified sample concentration
C = sample background concentration
s = concentration equivalent of fortifier added to water sample.

10.4.3 If mercury recovery falls outside the designated range, and the laboratory performance is shown to be in control (Sect. 10.3), the recovery problem encountered with the fortified water sample is judged to be matrix related, not system related. The result for mercury in the unfortified sample must be labelled to inform the data user that the results are suspect due to matrix effects.

11. PROCEDURE

11.1 Transfer 100 mL of the water sample [or an aliquot diluted with reagent water (Sect. 7.1.7) to 100 mL] into a BOD bottle.

11.2 Add 5 mL of H_2SO_4 (Sect. 7.1.11) and 2.5 mL of HNO_3 (Sect. 7.1.4) to the sample.

11.3 To each bottle add 50 mL reagent water (Sect. 7.1.7) and 15 mL $KMnO_4$ solution (Sect. 7.4). For sewage or industry wastewaters, additional $KMnO_4$ may be required. Shake and add additional portions of $KMnO_4$ solution, if necessary, until the purple color persist for at least 15 min. Add 8 mL of $K_2S_2O_8$ solution (Sect. 7.5) to each bottle. Mix thoroughly, cap and cover the top of the BOD bottle with aluminum foil or other appropriate cover. Heat for 2 h in a water bath at 95°C.

11.4 Turn on the spectrophotometer and circulating pump. Adjust the pump rate to 1 L/min. Allow the spectrophotometer and pump to stabilize.

11.5 Cool the BOD bottles to room temperature and dilute in the following manner:

11.5.1 To each BOD bottle containing the instrument calibration LFB and LRB, add 50 mL of reagent water (Sect. 7.1.7).

11.5.2 To each BOD bottle containing a water sample, QCS or LFM, add 55 mL of reagent water (Sect. 7.1.7).

11.6 To each BOD bottle, add 6 mL of $NaCl-(NH_2OH)_2 \cdot H_2SO_4$ solution (Sect. 7.6) to reduce the excess permanganate.

11.7 Treating each bottle individually:

11.7.1 Placing the aspirator inside the BOD bottle and above the liquid, purge the head space (20 to 30 sec) to remove possible gaseous interference.

11.7.2 Add 5 mL of $SnCl_2$ solution (Sect. 7.7) and immediately attach the bottle to the aeration apparatus.

11.7.3 The absorbance, as exhibited either on the spectrophotometer or the recorder, will increase and reach maximum within 30 sec. As soon as the recorder pen levels off, approximately 1 min, open the bypass value (or optionally remove aspirator from the BOD bottle if it is vented under the hood) and continue aeration until the absorbance returns to its minimum value.

11.8 Close the by-pass value, remove the aspirator from the BOD bottle and continue aeration. Repeat (Sect. 11.7) until all BOD bottles have been aerated and recorded.

12. CALCULATIONS

12.1 Measure the peak height of the unknown from the chart and read the mercury value from the standard curve.

12.2 Calculate the mercury concentration in the sample by the formula:

$$\mu g\ Hg/L = \left(\begin{matrix}\mu g\ Hg\ in \\ aliquot\end{matrix}\right)\left(\frac{1{,}000}{mL\ of\ aliquot}\right)$$

12.3 Report mercury concentrations as follows: Below 0.2 µg/L, < 0.2 µg/L; between 1 and 10 µg/L, one decimal; above 10 µg/L, whole numbers.

13. PRECISION AND ACCURACY

13.1 In a single laboratory (EMSL), using a Ohio River composite sample with a background mercury concentration of 0.35 Hg µg/L and

fortified with concentration of 1.0, 3.0, and 4.0 Hg µg/L, the standard deviations were ± 0.14, ± 0.10 and ± 0.08 Hg µg/L, respectively. Standard deviation at the 0.35 Hg µg/L level was ± 0.16 Hg µg/L. Percent recoveries at the three levels were 89, 87, and 87%, respectively.

13.2 In a joint EPA/ASTM interlaboratory study of the cold vapor technique for total mercury in water, increments of organic and inorganic mercury were added to natural waters. Recoveries were determined by difference. A statistical summary of this study is found in Table 1.

14. REFERENCES

1. Kopp, J.F., Longbottom, M.C., and Lobring, L.B., " 'Cold Vapor' Method for Determining Mercury"; J. Am. Water Works Assoc., Vol. 64, No. 1, January 1972.

2. "Safety in Academic Chemistry Laboratories", American Chemical Society Publication, Committee on Chemical Safety, 3rd Edition, 1979.

3. "OSHA Safety and Health Standards, General Industry", (29CFR 1910), Occupational Safety and Health Administration, OSHA 2206, revised January 1976.

4. "Proposed OSHA Safety and Health Standards, Laboratories", Occupational Safety and Health Administration, Federal Register, July 24, 1986.

5. "Specification for Reagent Water", D1193, Annual Book of ASTM Standards, Vol. 11.01, 1990.

6. Code of Federal Regulations 40, Ch. 1, Pt. 136 Appendix B.

TABLE 1. INTERLABORATORY PRECISION AND ACCURACY DATA FOR FLAMELESS ATOMIC ABSORPTION

Number of Labs	True Values µg/L	Mean Value µg/L	Standard Deviation µg/L	RSD %	Mean Accuracy as % Bias
76	0.21	0.349	0.276	89	66
80	0.27	0.414	0.279	67	53
82	0.51	0.674	0.541	80	32
77	0.60	0.709	0.390	55	18
82	3.4	3.41	1.49	44	0.34
79	4.1	3.81	1.12	29	-7.1
79	8.8	8.77	3.69	42	-0.4
78	9.6	9.10	3.57	39	-5.2

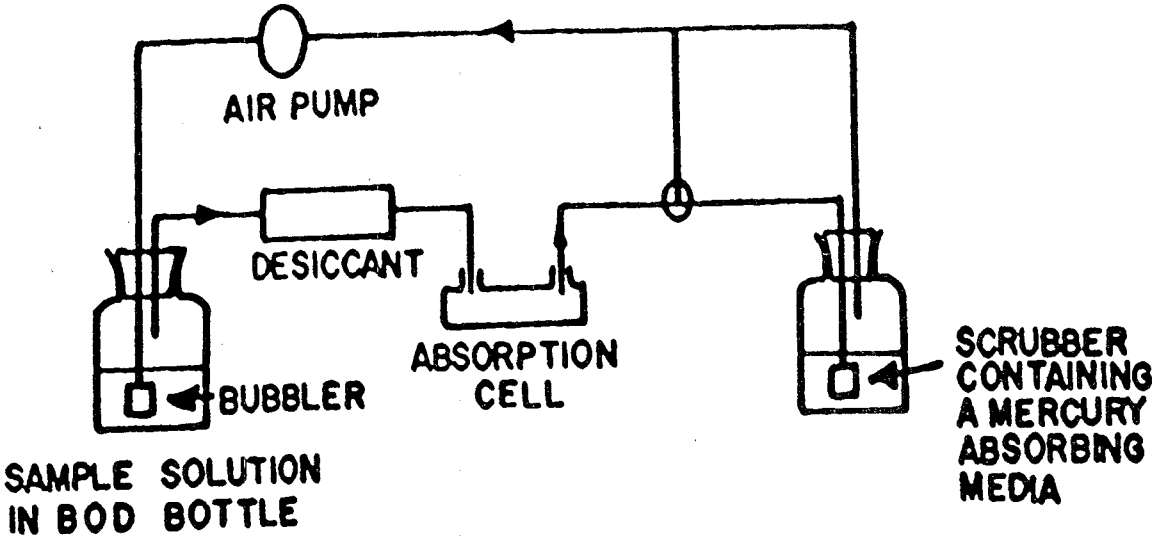

Figure 1. Apparatus for Flameless Mercury Determination

Because of the toxic nature of mercury vapor, inhalation must be avoided. Therefore, a bypass has been included in the system to either vent the mercury vapor into a exhaust hood or pass the vapor through some absorbing media, such as:

a) equal volumes of 0.1 N $KMnO_4$ and 10% H_2SO_4

b) 0.25% iodine in a 3% KI solution.

A specially treated charcoal that will absorb mercury vapor is also available from Barnebey and Cheney, P.O. Box 2526, Columbus, OH 43216, Catalog No. 580-13 or 580-22.

METHOD 245.3

DETERMINATION OF INORGANIC MERCURY (II) AND SELECTED ORGANOMERCURIALS IN DRINKING AND GROUND WATER BY HIGH PERFORMANCE LIQUID CHROMATOGRAPHY (HPLC) WITH ELECTROCHEMICAL DETECTION (ECD)

Otis Evans and Betty Jacobs
Inorganic Chemistry Branch
Chemistry Research Division

Revision 1.1
April 1991

ENVIRONMENTAL MONITORING SYSTEMS LABORATORY
OFFICE OF RESEARCH AND DEVELOPMENT
U.S. ENVIRONMENTAL PROTECTION AGENCY
CINCINNATI, OHIO 45268

METHOD 245.3

DETERMINATION OF INORGANIC MERCURY (II) AND SELECTED ORGANOMERCURIALS IN DRINKING AND GROUND WATER BY HIGH PERFORMANCE LIQUID CHROMATOGRAPHY (HPLC) WITH ELECTROCHEMICAL DETECTION (ECD)

1. SCOPE AND APPLICATION

1.1 This method is applicable to the determination of certain dissolved mercury species in drinking and ground water.

1.2 The analytical range is approximately 2 μg/L to 10 mg/L inorganic mercury (II) and organometallic mercury compounds.

1.3 The method detection limits (MDLs) are 1.8 μg/L for mercury (II), 1.9 μg/L for methylmercury, 1.7 μg/L for ethylmercury, and 0.8 μg/L for phenylmercury.

1.4 This method should be used by analysts experienced in liquid chromatography with electrochemical detection (LCEC).

2. SUMMARY OF METHOD

2.1 This method describes a procedure for the speciation of certain dissolved mercury ionic analytes in drinking and ground water. Inorganic mercury (II), methylmercury, ethylmercury, and phenylmercury are determined by reversed-phase HPLC with reductive amperometric electrochemical detection[1-6]. The mercury analytes are complexed on-column with 2-mercaptoethanol (2-ME) to form charge-neutral species[1-9]. The mercury complexes are eluted with 60% (w/w) methanol (isocratic elution conditions) buffered at pH 5.5. The maximum retention time is less than 10 min at a flow rate of 0.6 mL/min (Figure 1).

3. DEFINITIONS

3.1 FIELD DUPLICATES (FD1 and FD2) - Two separate samples collected at the same time and placed under identical circumstances and treated exactly the same through field and laboratory procedures. Analyses of FD1 and FD2 give a measure of the precision associated with sample collection, preservation and storage, as well as with laboratory procedures.

3.2 FIELD REAGENT BLANK (FRB) - Reagent water placed in a sample container in the laboratory and treated as a sample in all respects, including exposure to sampling site conditions, storage, preservation and all analytical procedures. The purpose of the FRB is to determine if method analytes or other interferences are present in the field environment.

3.3 LABORATORY DUPLICATES (LD1 and LD2) - Two sample aliquots taken in the analytical laboratory and analyzed separately with identical procedures. Analyses of LD1 and LD2 give a measure of the precision associated with laboratory procedures, but not with sample collection preservation, or storage procedures.

3.4 LABORATORY FORTIFIED BLANK (LFB) - An aliquot of reagent water to which known quantities of the method analytes are added in the laboratory. The LFB is analyzed exactly like a sample, and its purpose is to determine whether the methodology is in control, and whether the laboratory is capable of making accurate and precise measurements at the required detection limit.

3.5 LABORATORY PERFORMANCE CHECK SOLUTION (LPCS) - A solution of method analytes used to evaluate the performance of the LCEC system with respect to a defined set of method criteria.

3.6 LABORATORY REAGENT BLANK (LRB) - An aliquot of reagent water that is treated exactly as a sample. It is exposed to all the glassware, method solvents, and reagents that are used with other samples. The purpose of the LRB is to determine if method analytes or other interferences are present in the laboratory environment, the reagents, or the apparatus.

3.7 METHOD DETECTION LIMIT (MDL) - The minimum concentration of an analyte that can be identified, measured and reported with 99% confidence that the analyte concentration is greater than zero.

3.8 ORGANOMETALLIC COMPOUNDS - Compounds in which the carbon atoms of organic groups are bound to metal atoms.

3.9 PRIMARY DILUTION STANDARD SOLUTION - A solution of several analytes prepared in the laboratory from stock standard solutions and diluted as needed to prepare calibration solutions and fortified blanks.

3.10 SPECIATION - The determination of certain individual physico-chemical forms of an element.

3.11 STOCK STANDARD SOLUTION - A concentrated solution containing a single certified standard that is a method analyte, or a concentrated solution of a single analyte prepared in the laboratory with an assayed reference compound. Stock standard solutions are used to prepare primary dilution standards.

3.12 QUALITY CONTROL SAMPLE (QCS) - A sample matrix containing method analytes or a solution of method analytes in a water miscible solvent which is used to fortify reagent water or environmental samples. The QCS is obtained from a source external to the laboratory, and is used to check laboratory performance with externally prepared test materials.

3.13 CALIBRATION STANDARD (CAL) - A solution prepared from the primary dilution standard solution and stock standard solutions. The CAL solutions are use to calibrate the instrument response with respect to analyte concentration.

3.14 AMPEROMETRIC DETECTOR - An electrochemical detector employing a working electrode, which is kept at a constant potential versus a reference electrode. A small portion of the electroactive species passing the electrode is electrolyzed (reduced or oxidized) and the electrolysis current is a function of the concentration of the eluted electroactive material.

3.15 GOLD AMALGAMATED MERCURY ELECTRODE (GAME) - A mercury coated gold electrode.

4. INTERFERENCES

4.1 Interferences in this method may be caused by contaminants in solvents, reagents, glassware, Teflon bottles (metals storage), and other sample processing apparatus. These interferences may lead to artifacts or elevated baselines in liquid chromatograms. All reagents and apparatus must be routinely demonstrated to be free from interferences under the conditions of the analysis by running a laboratory reagent blank (Sect. 10.6).

4.1.1 Glassware and Teflon bottles must be scrupulously cleaned. Soak in concentrated nitric acid and rinse thoroughly with organic free deionized, distilled water. If these containers are used for free metal and organometal solution preparation and storage they should be soaked and filled with a 5 to 10% (v/v) solution of nitric acid for one week, rinsed, sealed and stored containing deionized, distilled water.

4.1.2 The use of high purity reagents and solvents helps to minimize interference problems. Purification of solvents by distillation in all-glass systems may be required.

4.2 Interfering contamination may occur when a sample containing low concentrations of analytes is analyzed immediately following a sample containing relatively high concentrations of analytes. A preventive technique is between-sample rinsing of the sample syringe and sample loop with methanol and/or water. After analysis of a sample containing high concentrations of analytes, one or more laboratory reagent blanks should be analyzed.

4.3 Matrix interferences may be caused by contaminants that are present in the sample. The extent of matrix interference will vary considerably from source to source, depending upon the sample type.

4.4 Electrochemical interferences are caused by species which are electrochemically active (i.e., reducible at the surface of the

GAME) and have retention times which are the same or very similar to the analytes (or because of the type of reduction process can produce broad chromatographic responses which obscure large portions of the resultant chromatograms).

Amperometric (reductive) electrochemical detection of mercury analytes requires the complete removal of oxygen from the eluent and sample (1,2,10,11,13-15). (Solutions in atmospheric equilibrium typically contain 10^{-4} to 10^{-3} M oxygen. The specific reaction(s) depends on electrode material, potential, and electrolyte composition). The presence of oxygen results in two distinct yet closely related problems: mobile phase oxygen and sample oxygen. Mobile phase oxygen contributes to onerous residual currents that make trace measurements virtually impossible. To lower mobile phase oxygen to acceptable levels, deoxygenation can be facilitated by a combination of sparging with inert gas (insufficient alone) and warming of the eluent solution.

4.4.1 Sample oxygen is retained on reversed-phase columns (not eluted in the void volume) and elutes as a broad, tailing band. Its retention time is independent of the concentrations of the mobile phase constituents; therefore, manipulation of the elution position is difficult. Oxygen is detected as a peak when only the mobile phase is purged (sparged) with inert gas. Elimination of the sample oxygen interference can be accomplished by purging with an inert gas prior to injection. The sample is placed in a 3 to 5 mL vial, as shown in Figure 2b, and purged with a stream of inert gas for ≈ 5 min. The sample aliquot is introduced into the sample injection loop via a closed system to prevent reentry of oxygen[11].

4.4.2 Mobile phase oxygen. Both positive and negative oxygen peaks can arise in LCEC. The former occurs when the sample solution is not purged with an inert gas. A negative oxygen peak occurs when the mobile phase contains more oxygen than the sample. The negative peak has the same retention time and shape but may be lower in magnitude then the positive oxygen peak.

5. SAFETY

5.1 The toxicity or carcinogenicity of each reagent used in this method has not been precisely defined; however, each chemical compound must be treated as a potential health hazard. The laboratory is responsible for maintaining a current awareness file of OSHA regulations regarding the safe handling of the chemicals specified in this method. A reference file of material safety data sheets should also be made available to all personnel involved in the chemical analysis. Additional references to laboratory safety should be identified and made available for the information of the personnel using this method.

The current OSHA standard for organo (alkyl) mercury is 0.01 mg of organo (alkyl) mercury per cubic meter of air (mg/m^3) averaged over an eight-hour work shift with a ceiling level of 0.04 mg/m^3. Organo (alkyl) mercury can affect the body if it is inhaled, comes in contact with the eyes or skin, or is swallowed. It may enter the body through the skin. Skin that becomes contaminated with organo (alkyl) mercury should be immediately washed or showered with soap or mild detergent and water.

If organo (alkyl) mercury compounds are spilled or leaked:

1. Remove ignition sources.
2. Ventilate area of spill or leak.
3. If in the solid form, collect for reclamation or disposal.
4. If in the liquid form, absorb on paper towels. Evaporate in a safe place (such as a fume hood).

5.1.1 The addition of the complexing agent, 2-Mercaptoethanol (2-ME), should be performed in a hood.

5.1.2 The eluent pH should be adjusted in a hood.

5.1.3 Precautions must be taken in the preparation of the GAME to prevent aerosols and spills.

5.1.4 Disposal of waste (solvents, analytes, etc.) from the system must be according to local regulations.

6. APPARATUS AND EQUIPMENT (Some specifications are suggested)

6.1 HIGH PERFORMANCE LIQUID CHROMATOGRAPH

6.1.1 An HPLC system designed for pumping solvents at precisely controlled flow rates and pressures. The system should be capable of injecting 10- to 200- μL aliquots.

NOTE: Amperometric reductive electrochemical detection of the mercury analytes requires the complete removal of oxygen from the eluent and samples. Copper tubing (1/8 in.) may be used for lines from the purge gas (Ar) tank to the mobile phase flask. Fittings and tubing (1/16 in. o.d.) constructed from type 316 stainless steel should be used for all other connections[1,10,11,14,15].

6.1.2 Analytical column--25 cm x 4.6 mm I.D. stainless steel packed with LiChrosorb RP-18 (5 μm irregularly shaped

particles) hydrocarbon phase (C-18 (ODS)) bonded silica (EM Science) or equivalent.

6.1.3 Guard column--70 mm x 4.6 mm I.D. stainless steel packed with Perisorb RP-18 (30-40 μm) (EM Science) or equivalent.

6.1.4 Pre-column (saturator column)--70 mm x 4.6 mm I.D. stainless steel packed with spherical silica (18 μm) (EM Science) or equivalent.

6.1.5 Electrochemical detector (potentiostat/current amplifier).

6.1.5.1 Working electrode. - GAME.

6.1.5.2 Reference electrode - Ag/AgCl 3M NaCl).

6.1.6 Other columns or detectors may be used if the requirements of Sect. 10.5 can be met.

6.2 Strip Chart Recorder - Variable speed.

6.3 Balance--Analytical, capable of accurately weighing to the nearest 0.01 mg.

6.4 General purpose laboratory, top-loading, metric, automatric calibration, full range-taring readibility to 0.01 g.

6.5 Filtration Apparatus--To filter samples and mobile phases used in HPLC, use 250 mL glass reservoir (connects to 1 L bottle or vacuum flask), funnel base and stopper, clamp, stainless steel holder, screen and Teflon gaskets (Figure 3). Recommended are 47-mm filters (Millipore Type HA, 0.45 μm, for water and Millipore Type FH, 0.5-μm, for organics or equivalent).

6.6 GLASSWARE

6.6.1 Three-neck distillation flask with all equivalent height necks of ₮ 24/40 joints.

6.6.2 Condenser, Graham, Drip Tip Inner (bottom) and Outer (top) ₮ 24/40 Joints.

6.6.3 Reaction vials--5-mL capacity serve as sample cells and purge gas saturation chambers.

6.6.4 Bubbler--₮ 29/42 joints (frit not required).

6.6.5 Connecting Adapter, ₮ 24/40 joint (condenser end).

6.7 Standard 1-L heating mantle.

6.8 Temperature Controller--Capable of maintaining temperatures within 2°C of desired point.

6.9 Thermistor probe--Heavy duty laboratory style (~20 cm long).

6.10 Septa--White rubber for ₮ 24/40 joints.

6.11 Refrigerated Recirculating Cooler--With sealable reservoir, temperature controller, recirculating pump, air cooled refrigeration (± 1.0°C). Circulation is in a closed loop configuration (system).

6.12 SYRINGES

6.12.1 Hypodermic syringe--5 mL glass (gas tight).

6.12.2 Microliter gas tight syringe--50 μL an 100 μL needle: 90° blunt tip, 2" long, 0.028" OD (22S gauge), no electrotaper.

7. REAGENTS AND CONSUMABLE MATERIALS

7.1 Acetonitrile (CASRN-75-05-8)--HPLC grade.

7.2 Deionized, distilled water (CASRN-7732-18-5): Prepared by passing distilled water through mixed bed cation and anion exchange resins. Use deionized, distilled water for all reagents, eluent solutions, calibration standards and dilutions. In this method, the term deionized distilled water will be used interchangeably with reagent water (i.e., water in which an interferent is not observed at the method detection limit of the compounds of interest).

7.3 Inert Gas--High purity argon or helium for degassing eluents and samples.

7.4 HPLC MOBILE PHASE

7.4.1 Acetic acid, Glacial (CASRN-64-19-7)--Ultrex grade (for eluent pH adjustment).

7.4.2 Ammonium hydroxide (CASRN-1336-21-6)--Ultrex grade, 20% (for eluent pH adjustment).

7.4.3 Eluent: Mix 600 g of methanol (Sect. 7.4.5) and 400 g water (Sect. 7.2.), pH 5.5, add 200 μL of 2-mercaptoethanol to 1-L of solution. (The total volume is ≈ 1.125 L.) Allow to cool, adjust the pH, transfer to a 1-L volumetric flask (refrigerate the remainder) and add the complexing agent (Sect. 7.4.4)).

7.4.4 2-Mercaptoethanol (CASRN-60-24-2)--**CAUTION**: Combustible, stench, harmful vapor; store in hood.

7.4.5 Methanol (CASRN-67-56-1)--High purity solvent, HPLC grade.

7.5 Ethylmercury chloride (CASRN-107-27-7).

7.6 Mercuric chloride (CASRN-7487-94-7).

7.7 Mercury, metal (CASRN-7439-97-6)--Triple distilled.

7.8 Methylmercury chloride (CASRN-115-09-3).

7.9 Nitric acid, conc. (CASRN-7697-37-2)--sp gr 1.41.

7.10 Nitric acid, 1:1: Add 50 mL conc. HNO_3 (Sect. 7.9) to 40 mL of distilled, deionized water (Sect. 7.2), cool, and dilute to 100 mL.

7.11 Phenylmercury acetate (CASRN-62-38-4).

7.12 Sodium chloride (CASRN-7647-14-5)--Crystal, ACS grade, 3M. Dissolve 43.8 g of sodium chloride in deionized, distilled water (Sect. 7.2) and dilute to 250 mL.

7.13 Stock standard solutions (1000 μg/mL) of the mercury analytes may be prepared from reagent grade chemicals. Typical metal stock solution preparation procedures follow. The amount of organic solvent, acetonitrile, (Sect. 7.1) is added as needed in order to dissolve the particular mercury organometal.

7.13.1 Mercury (II) solution, stock, 1 mg/mL: Dissolve 0.1354 g of mercuric chloride (Sect. 7.6) in deionized, distilled water with stirring until completely dissolved. Transfer to a 100 mL volumetric flask and dilute to volume. Transfer to a 125-mL Teflon bottle and refrigerate. This solution can be stored and used for at least six months.

7.13.2 Methylmercury solution, stock, 1 mg/mL methylmercury: Dissolve 0.5822 g of methylmercuric chloride (Sect. 7.8) in deionized, distilled water (minimum volume of water added initially) with constant stirring. Add acetonitrile (Sect. 7.1) slowly until dissolution is complete. In 500 mL total volume, approximately 10% (V/V) CH_3CN is sufficient to dissolve this amount of material. Dilute to 500 mL total volume and transfer to a Teflon bottle for refrigeration and storage. This solution can be stored and used for at least six months.

7.13.3 Ethylmercury solution, stock, 1 mg/mL ethylmercury: Dissolve 0.5771 g of ethylmercuric chloride (Sect. 7.5) in deionized distilled water with constant stirring. Because Ethylmercuric chloride is difficult to dissolve in water, add acetonitrile (Sect. 7.1) until there is complete dissolution. Approximately 200 mL of 40% (V/V) acetonitrile

(Sect. 7.1), is needed. Dilute to 500 mL with distilled, deionized water (Sect. 7.2), transfer to a Teflon bottle for refrigeration and storage. This solution can be stored and used for at least six months.

7.13.4 Phenylmercury solution, stock, 1 mg/mL phenylmercury: Dissolve 0.6063 g of phenylmercuric acetate (Sect. 7.11). Add approximately 10% (V/V) acetonitrile (Sect. 7.1) to aid in dissolution. Dilute to 500 mL with deionized, distilled water (Sect. 7.2) and refrigerate in a Teflon bottle. This solution can be stored and used for at least six months.

NOTE: For analysts who do not routinely perform mercury analyses or do not wish to generate excessive amounts of mercury waste, the stated volumes and/or amounts of organometal salts should be reduced proportionately. Primary and secondary dilution standards may be diluted to 10 mL or 25 mL of solution to avoid this problem.

8. SAMPLE COLLECTION, PRESERVATION AND HANDLING

8.1 Sample Collection--Samples should be collected in duplicate in amber colored glass containers or glass containers wrapped in aluminum foil. The containers should not be prerinsed with sample prior to collection.

8.1.1 When sampling from a water tap, open the tap and allow the system to flush until the water temperature has stabilized. Adjust the flow to about 500 mL/min and collect duplicate samples from the flowing stream.

8.1.2 When sampling from an open body of water, fill the sample container with water from a representative area. Sampling equipment, including automatic samplers, must be free of plastic tubing and other components that may leach interferents into the water. Automatic samplers that composite samplers over time must use refrigerated glass/Teflon sample containers.

8.2 Sample Preservation--All samples should be iced or refrigerated at 4°C from the time of collection until filtration. The samples should be filtered as soon as possible (Figure 3) after received in the laboratory.

8.3 Holding Time--Samples should be analyzed immediately after filtration. If this is not possible, samples should be refrigerated at 4°C. Maximum sample holding time is one week.

8.4 FIELD BLANKS

8.4.1 Processing a field reagent blank (FRB) is recommended along with each sample set, which is composed of the samples collected from the same general sample site at approximately the same time. At the laboratory, fill a sample container with reagent water, seal, and ship to the sampling site along with the empty sample containers. Return the FRB to the laboratory with filled sample bottles.

NOTE: The prevention of contamination and losses is of paramount importance in organomercury speciation and analysis. Potential sources of contamination in the laboratory environment are dust, reagent impurities, and sample contact with laboratory apparatus (resulting in contamination by leaching or surface desorption). Depletion of mercury via adsorption onto container surfaces must also be considered.

9. CALIBRATION AND STANDARDIZATION

9.1 Establish LCEC operating conditions equivalent to those indicated in Table 1. Calibrate the HPLC system using the external standard technique.

9.2 EXTERNAL STANDARD CALIBRATION PROCEDURE

9.2.1 An external standard is a solution containing a known amount of a pure compound that is analyzed with the same procedures and conditions that are used to analyze samples containing that compound. From measured detector responses to known amounts of the external standard, a sample concentration of that compound can be calculated from measured detector response to that compound in a sample analyzed with the same procedures.

9.2.2 At least three calibration standards are needed. One should contain each analyte at a concentration near to but greater than its method detection limit (MDL) (Table 2); the other two should bracket the concentration range expected in the samples or define the working range of the detector. For example, if the MDL is 1.0 μg/L and a sample is expected to contain approximately 5.0 μg/L, aqueous standards should be prepared at concentrations of 2.0 μg/L, 5.0 μg/L, and 10.0 μg/L.

9.2.3 Inject 0.1 mL of each calibration standard and tabulate peak height or area response versus the concentration of the standard. The results are to be used to prepare a calibration curve for each analyte by plotting the peak height or area versus the concentration.

9.2.4 The working calibration curve must be verified on each working day by the measurement of one or more calibration standards (and when/if the working electrode is changed between analyses). If the response for an analyte varies from the response predicted by the calibration curve (Sect. 9.2.2) by more than ± 10%, the test must be repeated using a fresh calibration standard. If the results still do not agree (i.e., the response is off by more than ± 10%), generate a new calibration curve for each analyte. (Assuming that the electrode surface is "fatigued", the analyst should change the GAME before proceeding further). Generally the electrode can be used 3 to 4 days before the old amalgam surface has to be removed.

9.2.5 Single point calibration is sometimes an acceptable alternative to a calibration curve. Single point standards should be prepared from the primary dilution standard solutions. The single point calibration standard(s) should be prepared at a concentration that produces a response close (± 10%) to that of the unknowns.

10. QUALITY CONTROL

10.1 Each laboratory using this method is required to operate a quality control (QC) program. The minimum requirements of this program consist of the following: an initial demonstration of laboratory capability and regular analyses of laboratory reagent blanks (including solvent/eluent blanks) and laboratory fortified blanks (laboratory QC samples). The laboratory must maintain records to document the quality of the data generated.

10.2 Initial demonstration of low system (detector) background response (i.e., minimum residual (background) current and low noise output).

10.2.1 The system must operate with the minimum absolute background current in order to optimize sensitivity. Detection of analytes at low concentrations (e.g., 20 μg/L) can result in chromatograms being superimposed on a background current which may exceed the peak heights of the analytes. High background currents may increase instrumental susceptibility to flow variation noise and possibly lead to nonlinear deviations in the calibration curve(s). The Faradaic response, which may arise from an electrochemical reaction of the electroactive impurities in the mobile phase (eluent) is the principal component of the current produced at a constant potential detector. The most common sources of background current are the oxidation/reduction of the eluent or buffer salts, oxygen (either eluent or sample), ferrous and/or ferric iron and other metals ions.

10.2.2 The noise associated with an electrochemical detector is dependent on the magnitude of the background signal. In general, the higher the background, the higher the noise. The ratio of the noise to the background current stays about the same. Noise can be random or periodic and superimposed on the steady state background signal. The noise represents the collective contributions from pump pulsations, flow cell hydrodynamics, surface reactions, static electricity, power line noise, and electronic signal amplification. Noise can be minimized by (a) obtaining pulseless flow, (b) frequent system passivation, (c) proper maintenance of pump seals and check values in order to minimize flow fluctuations, (d) proper system grounding, and (e) careful scrutiny of the working electrode surface--a smooth, shiny mirror-like finish is desirable.

10.3 Another possible source of noise is the reference electrode which provides a stable, reproducible voltage to which the working electrode potential maybe referenced. The potential value should not vary with time and should be reproducible from electrode to electrode. Leaks can occur due to drying and cracking of the porous plug. As a consequence, the internal electrolyte concentration changes and subsequently the reference potential.

10.4 Air bubbles trapped around and/or between the working and reference electrode can cause noise, random as well as periodic with constant amplitude and frequency.

10.5 Initial demonstration of laboratory accuracy and precision. Analyze seven replicates of a laboratory fortified blank solution (laboratory QC samples) containing each analyte at concentration levels near the low calibration standard. (See regulations and maximum contaminant levels for guidance on appropriate concentrations.)

10.5.1 Prepare each replicate by adding an appropriate aliquot of the primary/secondary dilution standard solution, or other certified quality control sample, to reagent water. Analyze each replicate according to the procedure described in Sect. 11.

10.5.2 Calculate the measured concentration of each analyte in each replicate and the mean accuracy (as mean percentage of true value) and precision (as relative standard deviation, RSD) of the seven measurements of each analyte.

10.5.3 For each analyte at 50 μg/L, the mean accuracy expressed as a percentage of the true value is approximately 93% and the RSD is $\leq$ 11%.

10.5.4 Analysts should develop and maintain a system of control charts to plot the precision and accuracy of analyte measurements over time.

10.5.5 It is recommended that the laboratory periodically document and determine its detection limit capabilities for the analytes of interest. **NOTE**: The determination of the method detection limit (MDL) for this method was performed under special (ideal) experimental conditions in order to achieve the desired level. The GAME was specially prepared and the system was allowed to equilibrate over a 4 day period. Eluent flow was maintained at approximately 0.3-0.4 mL/min. The current sensitivity was increased until the lowest setting was achievable. The MDL of each analyte was calculated (Table 2) using procedures described in[12]. The listed MDLs should be achievable or lower with commercially available instrumentation, which include improved solvent delivery systems, new transducer cell designs, and installable in-line deoxygenators that remove at least 99% of the oxygen in the sample and mobile phase without affecting their integrity. Analyte detection at regulatory levels should be achievable.

10.6 Laboratory Reagent Blanks (LRB) Before processing any samples, the analyst must demonstrate that all glassware and reagent interferences are under control. Each time a set of reagents is changed (fresh eluent added) or a new working or reference electrode installed, a LRB must be analyzed. If within the retention time window of any analyte of interest the LRB produces a peak that would prevent the determination of that analyte, determine the source of contamination and eliminate the interference before processing samples.

10.7 A single laboratory fortified blank containing each mercury analyte at a concentration as specified in Sect. 10.5 must be analyzed with each set of samples. Evaluate the accuracy of the measurements. Any problems must be located and corrected before further analyses are performed.

10.8 A field reagent blank should be analyzed with each set of field samples. Data/information from these analyses will be used to help define and determine contamination related to field sampling and transportation activities.

10.9 Each quarter, replicate laboratory fortified blanks must be analyzed to determine the precision of the laboratory measurements. These data will be used in documenting data quality.

10.10 Each quarter, the laboratory must analyze a quality control sample obtained from an external source. A quality control sample should be analyzed each time a new set of standards are used. The entire

analytical procedure must be checked, if unacceptable accuracy data is obtained.

10.11 The laboratory must analyze an unknown performance evaluation sample (if available) at least once per year. Results for each analyte must be within established acceptance limits.

11. PROCEDURE-LIQUID CHROMATOGRAPHY WITH ELECTROCHEMICAL DETECTION (LCEC)

11.1 Table 1 summarizes the recommended operating conditions for LCEC and presents analyte retention times observed using this method. The operating conditions may be changed (e.g., flow rate, modifier percent, electrode potential, etc.) in order to enhance the separation or detection.

11.2 CHROMATOGRAPHIC PROCEDURES

11.2.1 Electrode (cell) preparation: The cell should be polished before use[10]. From beginning use, and regularly during its use, a new mercury film must be deposited on the gold disk. Follow the procedure for electrode preparation as stated in the operator's manual.

Mercury application--This process should be carried out in a tray in the event of an accidental spill. Follow the precautions for handling mercury. **NOTE**: Mercury has a high vapor pressure and should always be stored in a closed container or under water. Prior to mercury application rinse the electrode surface with a small amount of methanol and air-dry before proceeding.

Deposition of the mercury film on the gold disk is accomplished by placing a small drop of mercury on the gold surface. Cover the entire surface with mercury using a disposable pipet. Wait ≈ 3-5 minutes, then remove the excess mercury gently with the sharp edge of an index card. (This step may be repeated 2 to 4 times). The mercury surface can be smoothed with a soft tissue (lens tissue works best) to obtain a shiny, mirror finish. (**DISPOSE OF WASTE MERCURY CAREFULLY.**) If excess mercury is left on the electrode, there is a possibility of a short circuit with the auxiliary electrode (stainless steel top). In some instances, the insertion of a second gasket between the electrode cube halves can remedy the problem. Sometimes it is not necessary to remove the old amalgam surface before a fresh mercury surface can be applied. The new mercury surface can be formed on top of the old amalgam. Follow the same procedure as for a fresh gold surface.

The amalgam requires a period of equilibration following its formation. Usually allowing the amalgam to rest overnight is sufficient.

11.3 SYSTEM OPERATION

11.3.1 The instrumentation should be turned on and allowed to become stable before beginning.

11.3.2 The following chromatographic start-up procedure is recommended for reductive LCEC analysis[1,2]. **DEOXYGENATION:** Before initiating flow through the LC system, the eluent, which is placed in a 2-L distillation flask, is refluxed at 40 ± 5°C while being purged vigorously with inert gas (argon or helium) for approximately 1-2 hours (Figure 2A). Then the degassed mobile phase is pumped through the LCEC system to force out any oxygen entrained in the stationary phase pores (column interstices). Degassing the system may require 100-150 mL of mobile phase. The system must be flushed thoroughly. Next, the working electrode is turned on (after flushing) using the least sensitive gain setting. The current is monitored until the background current has stabilized in the desired range, usually 80 to 100 nA.

11.3.3 Sample degassing is necessitated when working at potentials more negative than -0.1 V for the GAME[10,14,15]. Care must be taken in order to preserve the sample's original composition. The purge gas should be presaturated with mobile phase or water and flowed gently through the sample to minimize its evaporation. Degassing a 3.5-4 mL sample requires approximately 5 min.

11.3.4 Sample injection requires a closed system. The injection valve inlet is immersed in the filtered and degassed sample solution and the sample aliquot is slowly drawn into the injection loop by gentle suction (Figure 2C)[1,11,14,15]. Exposure to oxygen is avoided and the integrity of the closed system is preserved.

12. CALCULATIONS

12.1 Calculate analyte concentrations in the sample by utilizing the calibration curve(s) generated from the responses of analytes in standard solutions.

12.2 Data should be rounded to the tenths place and reported in micrograms per liter.

13. PRECISION AND ACCURACY

13.1 In a single laboratory the MDL[12] was determined for each analyte. Seven aliquots of the fortified distilled water sample were measured and the results used to calculate the MDL at the 99% confidence level. The calculated MDLs (Table 2) ranged from 0.8 to 1.9 μg/L.

13.2 In a single laboratory, analyte recoveries from laboratory distilled water, tap water, and two groundwaters were determined at analyte concentrations ranging from 50 to 200 μg/L (Tables 3-5). Recoveries averaged 90 ± 7% RSD with comparable values obtained over the entire range of concentrations. The standard deviation of the measurements on all waters was approximately 1.52 μg/L with an RSD of approximately 0.64%.

14. REFERENCES

1. Evans, O. and McKee, G.D., Analyst, 1987, 112, 983.

2. Evans, O. and McKee, G.D., Analyst, 1988, 113, 243.

3. MacCrehan, W.A., Durst, R.A., and Bellama, J.M., Anal. Lett., 1977, 10, 1175.

4. MacCrehan, W.A., Durst, R.A., and Bellama, J.M., Nat. Bur. Stand. (U.S.), Spec. Publ., 1977, No.519, 57.

5. MacCrehan, W.A. and Durst, R.A., Anal. Chem., 1978, 50, 2108.

6. MacCrehan, W.A., Anal. Chem., 1981, 53, 74.

7. Holak, W., J. Liq. Chromatogr., 1985, 8, 563.

8. Holak, W., Analyst, 1982, 107, 1457.

9. Krull, I.S., Bushee, D.S., Schleicher, R.G., and Smith, S.B., Jr., Analyst, 1986, 111, 345.

10. "Installation/Operations Manual for Amperometric Controller and Transducer Package," Bioanalytical Systems, West Lafayette, IN, 1984.

11. Jacobs, W. Curr. Sep. 1982, 4, 45.

12. Glaser, J.A., Foerst, D.L., McKee, G.D., Quave, S.A., and Budde, W.L., Environ. Sci. Technol., 1981, 15, 1426.

13. Lewis, J.Y., Zodda, J.P., Deutsch, E., and Heineman, W.R., Anal. Chem., 1983, 55, 708.

14. Bratin, K., and Kissinger, P.T., Talanta, 1982, 29, 365.

15. Bratin, K., and Kissinger, P.T., J. Liq. Chromatogr., 1981, 4, (Suppl.2), 321.

TABLE 1. PRIMARY CHROMATOGRAPHIC CONDITIONS

Analyte	Absolute Retention Time, Min (a)	(b)
Mercury (II)	3.3	5.4
Methylmercury	3.5	5.9
Ethylmercury	4.2	6.9
Phenylmercury	5.3	9.2

(a) Flow rate - 1.0 mL/min.
(b) Flow rate - 0.6 mL/min.

Primary Conditions:

Analytical Column: 25 cm x 4.6 mm i.d., EM Science LiChrosorb RP-18 (5μm)

Pre-Column: Saturator Column, 70 mm x 4.6 mm i.d. (18 μm) EM Science

Guard Column: 70 mm X 4.6 mm i.d., EM Science Perisorb RP-18 (30-40 μm)

Mobile Phase: Isocratic elution - 60% (w/w) methanol, 0.01% (V/V) 2-mercaptoethanol, pH 5.5 acetate buffered

Flow Rate: 1.0 mL/min or 0.6 mL/min*

Injection volume: 100 μL

Detector: Electrochemical (GAME); - 0.800 V vs. Ag/AgCl

*The optimum flow rate is ≈ 1.0 mL/min. However, in some instances it is desirable to use a lower flow rate. A flow rate of 0.6 mL/min allows a slightly better separation between Hg(II) and CH_3Hg^+ than a flow rate of 1.0 mL/min. The lower flow rate does, however, result in approximately a 6-12% decrease in the analytical signals.

TABLE 2. METHOD DETECTION LIMIT (MDL) (a)

Parameter	Hg(II)	CH_3Hg^+	$C_2H_5Hg^+$	$C_6H_5Hg^+$
Retention time, min	≈5.3	≈5.8	≈6.9	≈9.5
MDL*, μg/L	≈1.8	≈1.9	≈1.7	≈0.8

(a) Experimental conditions: 60% (W/W) CH_3OH, pH 5.5 acetate buffer, 200 μL of 2-mercaptoethanol (ME). Potential, - 0.800V vs. Ag/AgCl; flow rate 0.6 mL min^{-1}. Other conditions: 100 μL sample loop; ≈ 45.5°C, ≈ 2250 lb in^{-2}; current offset ca. - 20 nA; GAME; and LiChrosorb RP-18 (5 μm) (25cm x 4.6mm i.d.). *For the MDL determination seven replicate measurements were made on solutions containing each analyte (12). The fortified value (true concentration) of each analyte is 10 μg/L.

TABLE 3. RECOVERY OF ANALYTES FROM REAGENT WATER (a)

Mixture	Hg Analytes	Hg added $\mu g\ L^{-1}$	Hg determined $\mu g\ L^{-1}$ (mean ± s.d.)	Recovery, % (mean ± s.d.)
A	Hg(II)	120	113.2 ± 2.1	94.4 ± 1.8
	CH_3Hg^+	120	117.1 ± 1.4	97.6 ± 1.2
	$C_2H_5Hg^+$	120	118.4 ± 1.5	98.7 ± 1.3
	$C_6H_5Hg^+$	120	123.2 ± 0.8	102.6 ± 0.6
B	Hg(II)	150	153.0 ± 1.3	102.0 ± 0.9
	CH_3Hg^+	150	154.6 ± 1.4	103.1 ± 1.0
	C_2H_5Hg	150	154.4 ± 1.4	103.0 ± 0.9
	$C_6H_5Hg^+$	150	143.3 ± 0.3	95.5 ± 0.2
C	Hg(II)	250	249.0 ± 0.8	99.6 ± 0.3
	CH_3Hg^+	250	255.7 ± 1.6	102.3 ± 0.6
	$C_2H_5Hg^+$	250	255.2 ± 2.2	102.1 ± 0.9
	$C_6H_5Hg^+$	250	250.5 ± 0.8	100.2 ± 0.3

(a) Three determinations per solution; 40% (W/W) methanol; flow rate = 1.0 mL/min.

TABLE 4. RECOVERY OF ANALYTES FROM GROUNDWATER (LAKOTA HILLS) (a)

Mixture	Hg Analytes	Hg added $\mu g\ L^{-1}$	Hg determined $\mu g\ L^{-1}$ (mean ± s.d.)	Recovery, % (mean ± s.d.)
A	Hg(II)	50	38.5 ± 0.3	77.0 ± 0.6
	CH_3Hg^+	50	45.8 ± 0.0	91.6 ± 0.0
	$C_2H_5Hg^+$	50	51.9 ± 0.2	103.8 ± 0.4
	$C_6H_5Hg^+$	50	41.2 ± 0.4	82.4 ± 0.9
B	Hg(II)	70	58.1 ± 0.1	83.0 ± 0.2
	CH_3Hg^+	70	65.0 ± 3.5	92.9 ± 5.0
	$C_2H_5Hg^+$	70	64.5 ± 2.4	92.1 ± 3.5
	$C_6H_5Hg^+$	70	68.5 ± 0.8	97.9 ± 1.1
C	Hg(II)	90	72.9 ± 0.3	81.0 ± 0.3
	CH_3Hg^+	90	84.2 ± 3.0	93.6 ± 3.4
	$C_2H_5Hg^+$	90	85.8 ± 1.2	95.3 ± 1.3
	$C_6H_5Hg^+$	90	98.0 ± 1.8	100.0 ± 2.0
D	Hg(II)	120	99.8 ± 0.0	83.2 ± 0.0
	CH_3Hg^+	120	114.5 ± 1.9	95.4 ± 1.6
	$C_2H_5Hg^+$	120	115.4 ± 1.0	96.1 ± 0.8
	$C_6H_5Hg^+$	120	118.5 ± 1.0	98.8 ± 0.9
E	Hg(II)	150	143.9 ± 0.4	95.9 ± 0.2
	CH_3Hg^+	150	143.3 ± 0.9	95.5 ± 0.6
	$C_2H_5Hg^+$	150	144.9 ± 0.2	96.6 ± 0.1
	$C_6H_5Hg^+$	150	145.9 ± 0.7	97.3 ± 0.5
F	Hg(II)	200	200.1 ± 2.3	100.0 ± 1.1
	CH_3Hg^+	200	192.8 ± 1.3	96.4 ± 0.7
	$C_2H_5Hg^+$	200	190.1 ± 1.6	95.1 ± 0.8
	$C_6H_5Hg^+$	200	185.1 ± 1.2	92.6 ± 0.6

(a) Two determinations per solution; 40% (W/W) methanol; flow rate = 1.0 mL/min.

TABLE 5. RECOVERY OF ANALYTES FROM GROUND WATER (CLERMONT COUNTY, OH) AND TAP WATER (CINCINNATI, OH) (A)

Mixture	Hg Analytes	Hg added μgL^{-1}	Hg measured in groundwater $\mu g\ L^{-1}$ (mean ± s.d.	Hg measured in tap water μgL^{-1} (mean ± s.d.)	Recovery, % (mean ± s.d.)	Recovery, % (mean ± s.d.)
A	Hg(II)	50	52.3 ± 2.0	49.5 ± 4.5	104.6 ± 4.0	99.0 ± 9.0
	CH_3Hg^+	50	43.6 ± 2.0	51.7 ± 3.3	87.2 ± 4.3	103.4 ± 6.7
	$C_2H_5Hg^+$	50	42.7 ± 3.9	44.8 ± 5.4	85.4 ± 7.9	89.6 ±11.0
	$C_6H_5Hg^+$	50	49.0 ± 2.3	47.6 ± 4.6	96.8 ± 4.5	95.2 ± 9.1
B	Hg(II)	100	98.6 ± 4.0	100.7 ± 0.9	98.6 ± 4.0	101.9 ± 0.9
	CH_3Hg^+	100	93.3 ± 3.5	103.1 ± 1.9	93.3 ± 3.5	103.1 ± 1.9
	$C_2H_5Hg^+$	100	97.0 ± 2.6	88.0 ± 6.5	97.0 ± 2.6	88.0 ± 6.5
	$C_6H_5Hg^+$	100	94.9 ± 3.0	99.3 ± 0.8	94.9 ± 3.0	99.3 ± 0.8
C	Hg(II)	120	120.1 ± 0.5	---	100.1 ± 0.4	---
	CH_3Hg^+	120	111.5 ± 1.3	---	92.9 ± 4.1	---
	$C_2H_5Hg^+$	120	109.4 ± 4.0	---	91.2 ± 3.5	---
	$C_6H_5Hg^+$	120	120.6 ± 0.4	---	100.5 ± 0.3	---
D	Hg(II)	150	---	150.5 ± 3.6	---	100.3 ± 2.4
	CH_3Hg^+	150	---	153.3 ± 2.4	---	102.2 ± 1.6
	$C_2H_5Hg^+$	150	---	129.5 ± 3.8	---	86.3 ± 2.6
	$C_6H_5Hg^+$	150	---	138.9 ± 2.0	---	92.6 ± 1.3

(a) Three determinations per solution; 60% (W/W) methanol, flow rate = 1.0 mL/min.

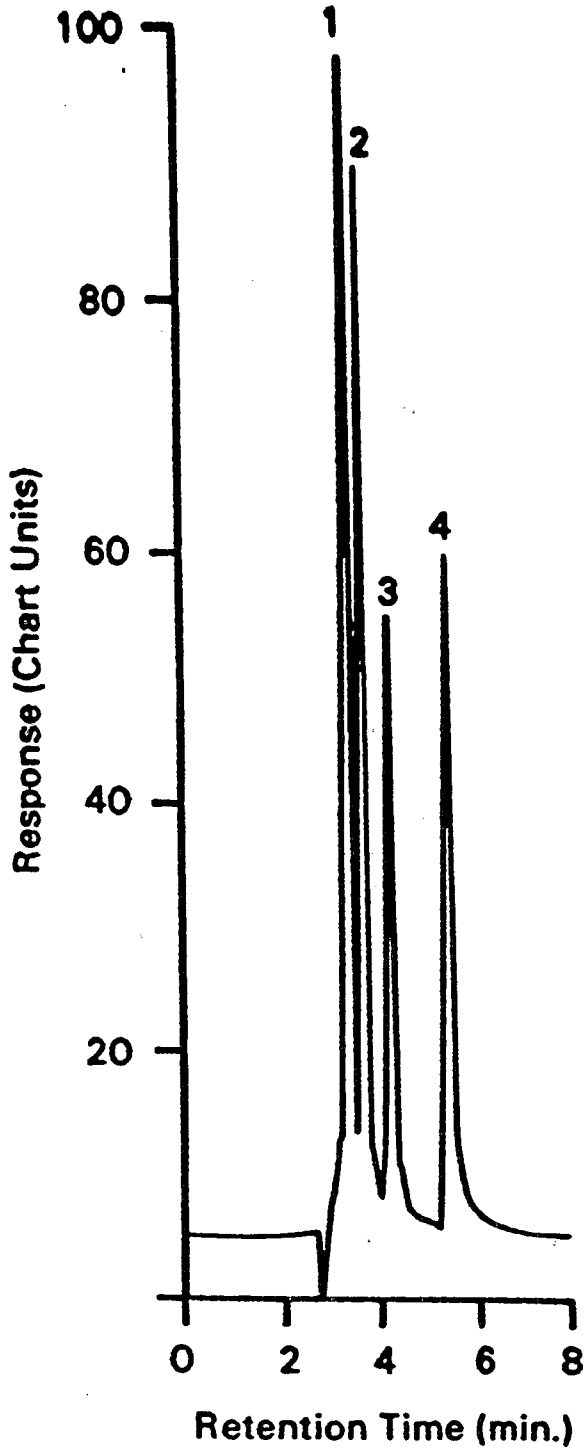

Figure 1. Separation of four charge-neutral mercury analytes. Conditions: eluent, 60% (W/W) methanol, column, LiChrosorb RP-18 (5 μm), 25 x 0.46 cm; pH 5.5 acetate buffer; 0.01% (V/V) 2-ME; flow rate, 1.0 mL min^{-1}; standard mixture, 10 μg mL^{-1} each analyte; sample loop, 100 μL. (1) HgII; (2) methylmercury; (3) ethylmercury; and (4) phenylmercury.

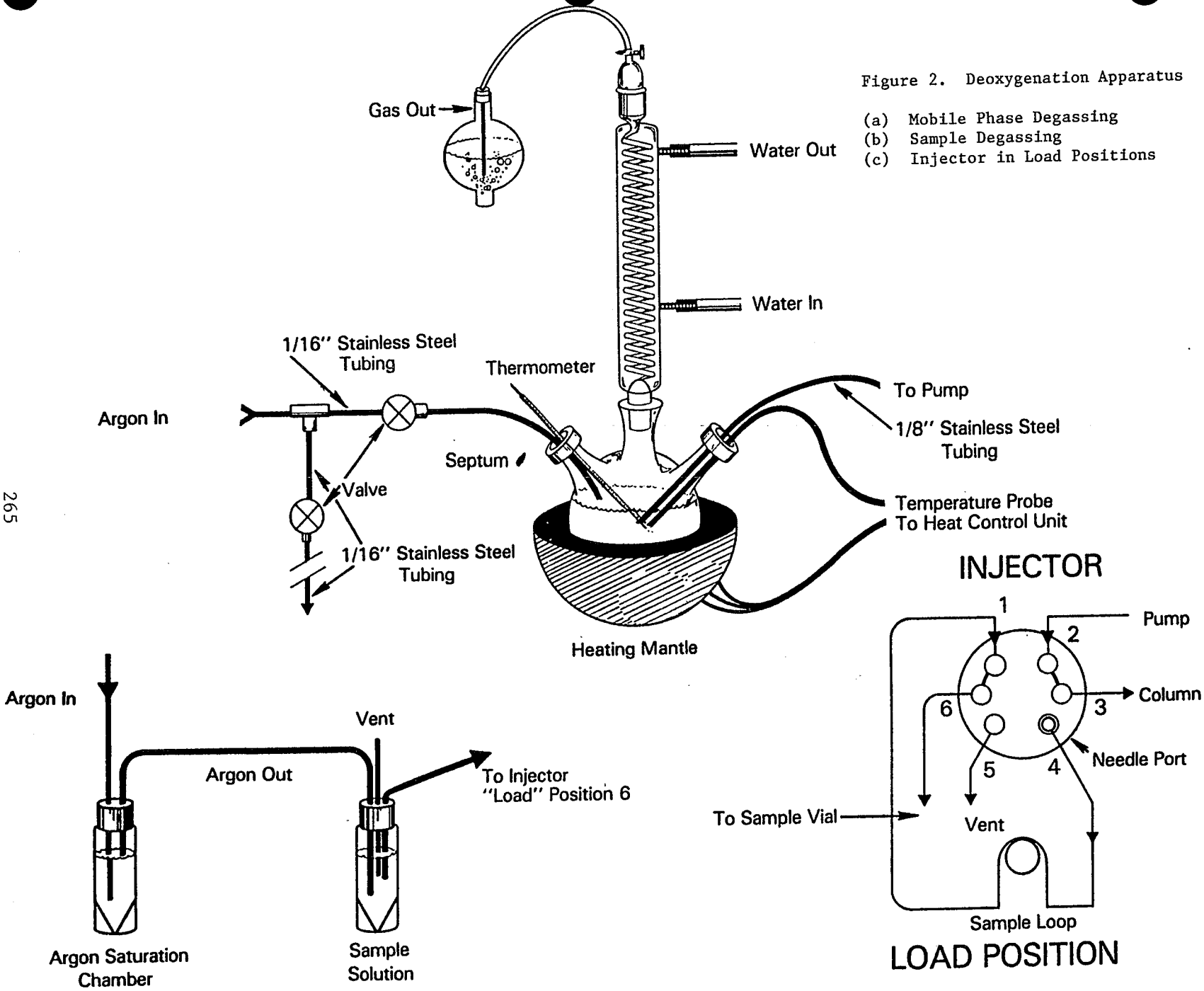

Figure 2. Deoxygenation Apparatus

(a) Mobile Phase Degassing
(b) Sample Degassing
(c) Injector in Load Positions

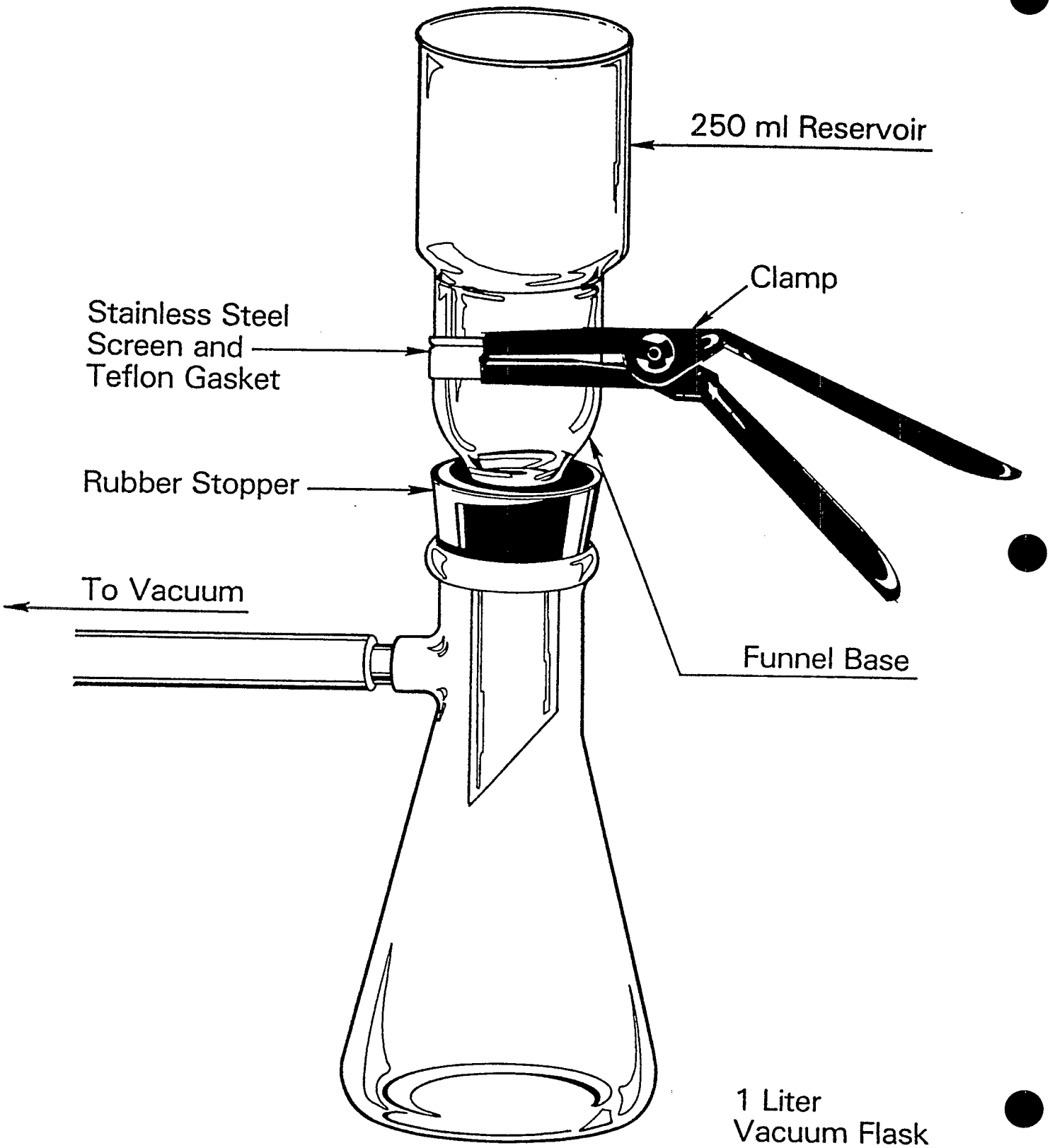

Figure 3. Sample and Mobile Phase Filtration Apparatus

METHOD 245.5

DETERMINATION OF MERCURY IN SEDIMENTS BY COLD VAPOR ATOMIC ABSORPTION SPECTROMETRY

Edited by Larry B. Lobring and Billy B. Potter
Inorganic Chemistry Branch
Chemistry Research Division

Revision 2.3
April 1991

ENVIRONMENTAL MONITORING SYSTEMS LABORATORY
OFFICE OF RESEARCH AND DEVELOPMENT
U.S. ENVIRONMENTAL PROTECTION AGENCY
CINCINNATI, OHIO 45268

METHOD 245.5

DETERMINATION OF MERCURY IN SEDIMENTS BY COLD VAPOR ATOMIC ABSORPTION SPECTROMETRY

1. SCOPE AND APPLICATION

1.1 This procedure[1,2] measures total mercury (organic + inorganic) in soils, sediments, bottom deposits and sludge type materials.

1.2 The range of the method is 0.2 to 5 μg/g. The range may be extended above or below the normal range by increasing or decreasing sample size or by optimizing instrument sensitivity.

2. SUMMARY OF METHOD

2.1 A weighed portion of the sediment sample is transferred to a BOD bottle (or equivalent flask fitted with a ground glass stopper) and digested in aqua regia for 2 min at 95°C. The digested sediment sample is diluted. Potassium permanganate is added to the sediment sample. The BOD bottle is transferred to the water bath where the sediment sample is oxidized for 30 min at 95°C. Mercury in the digested sediment sample is reduced with stannous chloride to elemental mercury and measured by the conventional cold vapor atomic absorption technique.

2.2 An alternate digestion[3] involving the use of an autoclave is described in (Sect. 11.3).

3. DEFINITIONS

3.1 BIOCHEMICAL OXYGEN DEMAND (BOD) BOTTLE - BOD bottle, 300 ± 2 mL with a ground glass stopper or an equivalent flask, fitted with a ground glass stopper.

3.2 CALIBRATION BLANK - A volume of ASTM type II reagent water prepared in the same manner (acidified) as the calibration standard.

3.3 CALIBRATION STANDARD (CAL) - A solution prepared from the mercury stock standard solution used to calibrate the instrument response with respect to analyte concentration.

3.4 INSTRUMENT DETECTION LIMIT (IDL) - The mercury concentration that produces a signal equal to three times the standard deviation of the blank signal.

3.5 LABORATORY FORTIFIED BLANK (LFB) - An aliquot of ASTM type II reagent water to which known quantities of inorganic and/or organic mercury are added in the laboratory. The LFB is analyzed exactly

like a sample, and its purpose is to determine whether method performance is within accepted control limits.

3.6 LABORATORY FORTIFIED SAMPLE MATRIX (LFM) - An aliquot of a sediment sample to which known quantities of calibration standard are added in the laboratory. The LFM is analyzed exactly like a sample, and its purpose is to determine whether the sample matrix contributes bias to the analytical results. The background concentrations of the analytes in the sample matrix must be determined in a separate aliquot and the measured values in the LFM corrected for the concentrations found.

3.7 LABORATORY REAGENT BLANK (LRB) - An aliquot of ASTM type II reagent water that is treated exactly as a sample including exposure to all glassware, equipment, and reagents used in analyses. The LRB is used to determine if method analyte or other interferences are present in the laboratory environment, reagents, or apparatus.

3.8 LINEAR DYNAMIC RANGE (LDR) - The concentration range over which the analytical working curve remains linear.

3.9 METHOD DETECTION LIMIT (MDL) - The minimum concentration of mercury that can be identified, measured and reported with 99% confidence that the analyte concentration is greater than zero and determined from analysis of seven LFMs.

3.10 QUALITY CONTROL SAMPLE (QCS) - A sediment sample containing known concentration of mercury derived from externally prepared test materials. The QCS is obtained from a source external to the laboratory and is used to check laboratory performance.

3.11 SEDIMENT SAMPLE - A fluvial, sand and/or humic sample matrix exposed to a marine, brackish or fresh water environment. It is limited by this method to that portion which may be passed through a number 10 sieve or a 2 mm mesh sieve.

3.12 STOCK STANDARD SOLUTION - A concentrated mercury solution prepared in the laboratory using assayed mercuric chloride or stock standard solution purchased from a reputable commercial source.

4. INTERFERENCES

4.1 Interferences have been reported for waters containing sulfide, chloride, copper and tellurium. Organic compounds which have broad band UV absorbance (around 253.7 nm) are confirmed interferences. The concentration levels for interferants are difficult to define. This suggests that quality control procedures (Sect. 10) must be strictly followed.

4.2 Volatile materials which absorb at 253.7 nm will cause a positive interference. In order to remove any interfering volatile

materials, the dead air space in the BOD bottle should be purged before addition of stannous chloride solution.

5. SAFETY

5.1 The toxicity and carcinogenicity of each reagent used in this method has not been fully established. Each chemical should be regarded as a potential health hazard and exposure to these compounds should be minimized by good laboratory practices[4]. Normal accepted laboratory safety practices should be followed during reagent preparation and instrument operation. Always wear safety glasses or full-face shield for eye protection when working with these reagents. Each laboratory is responsible for maintaining a current safety plan, a current awareness file of OSHA regulations regarding the safe handling of the chemicals specified in this method [5, 6].

5.2 Mercury compounds are highly toxic if swallowed, inhaled, or absorbed through the skin. Analyses should be conducted in a laboratory exhaust hood. The analyst should use chemical resistant gloves when handling concentrated mercury standards.

6. APPARATUS AND EQUIPMENT

6.1 ABSORPTION CELL - Standard spectrophotometer cells 10-cm long, having quartz windows may be used. Suitable cells may be constructed from plexiglass tubing, 1-in. O.D. by 4 1/2-in. long. The ends are ground perpendicular to the longitudinal axis and quartz windows (1-in. diameter by 1/16-in. thickness) are cemented in place. Gas inlet and outlet ports (also of plexiglass but 1/4-in. O.D.) are attached approximately 1/2-in. from each end. The cell is strapped to a burner for support and aligned in the light beam to give the maximum transmittance.

6.2 AERATION TUBING - Inert mercury-free tubing is used for passage of mercury vapor from the sample bottle to the absorption cell. In some systems, mercury vapor is recycled. Straight glass tubing terminating in a coarse porous glass aspirator is used for purging mercury released from the sediment sample in the BOD bottle.

6.3 AIR PUMP - Any pump (pressure or vacuum system) capable of passing air 1 L/min is used. Regulated compressed air can be used in an open one-pass system.

6.4 ATOMIC ABSORPTION SPECTROPHOTOMETER - Any atomic absorption unit having an open sample presentation area in which to mount the absorption cell is suitable. Instrument settings recommended by the particular manufacturer should be followed. Instruments designed specifically for mercury measurement using the cold vapor technique are commercially available and may be substituted for the atomic absorption spectrophotometer.

6.5 BIOCHEMICAL OXYGEN DEMAND (BOD) BOTTLE - See Sect. 3.1.

6.6 DRYING TUBE - Tube (6-in. x 3/4-in. OD) containing 20 g of magnesium perchlorate. The filled tube is inserted (in-line) between the BOD bottle and the absorption tube. In place of the magnesium perchlorate drying tube, a small reading lamp is positioned to radiate heat (about 10°C above ambient) on the absorption cell. Heat from the lamp prevents water condensation in the cell.

6.7 FLOWMETER - Capable of measuring an air flow of 1 L/min.

6.8 MERCURY HOLLOW CATHODE LAMP - Single element hollow cathode lamp or electrodeless discharge lamp and associated power supply.

6.9 PYREX DISH - Any appropriate size, (8-in. x 8-in.) or (8-in. x 12-in.).

6.10 RECORDER - Any multi-range variable speed recorder that is compatible with the UV detection system is suitable.

6.11 SIEVE - High-density polyethylene; polyester mesh, no. 10 mesh, 12-in. O.D and 3 1/2-in. depth.

6.12 WATER BATH - The water bath should have a covered top and capacity to sustain a water depth of 2-in. to 3-in. at 95°C ± 1°C. The dimensions of the water bath should be large enough to accommodate BOD bottles containing CAL, LFB, LFM, LRB, QCS and sediment samples with the lid on.

7. REAGENTS AND CONSUMABLE MATERIALS

7.1 Reagents may contain elemental impurities which bias analytical results. All reagents should be assayed by the chemical manufacturer for mercury and meet ACS specifications. It is recommended that the laboratory analyst assay all reagents for mercury.

7.1.1 Hydrochloric Acid (HCL), concentrated (sp.gr. 1.19), (CASRN 7647-01-0); assayed mercury level is not to exceed 1 ppb.

7.1.2 Hydroxylamine Hydrochloride ($NH_2OH \cdot HCl$), (CASRN 5470-11-1) may be used in place of hydroxylamine sulfate (Sect. 7.6); assayed mercury level of compound is not to exceed 0.05 ppm.

7.1.3 Hydroxylamine Sulfate [$(NH_2OH)_2 \cdot H_2SO_4$] (CASRN 10039-54-0); assayed mercury level of compound is not to exceed 0.05 ppm.

7.1.4 Mercuric Chloride ($HgCl_2$), (CASRN 7487-94-7).

7.1.5 Nitric Acid (HNO_3), concentrated (sp.gr. 1.41), (CASRN 7697-37-2); assayed mercury level is not to exceed 1 ppb.

7.1.6 Potassium Permanganate ($KMnO_4$), (CASRN 7722-64-7); assayed mercury level is not to exceed 0.05 ppm.

7.1.7 Reagent Water, ASTM type II.[7]

7.1.8 Sodium Chloride (NaCl), (CASRN 7647-14-5); assayed mercury level is not to exceed 0.05 ppm.

7.1.9 Stannous Chloride ($SnCl_2 \cdot 2H_2O$), (CASRN 10025-69-1); assayed mercury level is not to exceed 0.05 ppm.

7.1.10 Stannous Sulfate ($SnSO_4$), (CASRN 7488-55-3); assayed mercury level is not to exceed 0.05 ppm.

7.1.11 Sulfuric Acid (H_2SO_4), concentrated (sp.gr. 1.84), (CASRN 7664-93-9); assayed mercury level is not to exceed 1 ppb.

7.2 AQUA REGIA - Prepare immediately before use by carefully adding three volumes of conc. HCl (Sect. 7.1.1) to one volume of conc. HNO_3 (Sect. 7.1.5).

7.3 MERCURY CALIBRATION STANDARD - To each volumetric flask used for serial dilutions, acidify with (0.1 to 0.2% by volume) HNO_3 (Sect. 7.1.5). Using mercury stock standard (Sect. 7.4), make serial dilutions to obtain a concentration of 0.1 μg Hg/mL. This standard should be prepared just before analyses.

7.4 MERCURY STOCK STANDARD - Dissolve in a 100-mL volumetric flask 0.1354 g $HgCl_2$ (Sect. 7.1.4) with 75 mL of reagent water (Sect. 7.1.7). Add 10 mL of conc. HNO_3 (Sect. 7.1.5) and dilute to mark. Concentration is 1.0 mg Hg/mL.

7.5 POTASSIUM PERMANGANATE SOLUTION- Dissolve 5 g of $KMnO_4$ (Sect. 7.1.6) in 100 mL of reagent water (Sect. 7.1.7).

7.6 SODIUM CHLORIDE-HYDROXYLAMINE SULFATE SOLUTION - Dissolve 12 g of NaCl (Sect. 7.1.8) and 12 g of $(NH_2OH)_2 \cdot H_2SO_4$ (Sect. 7.1.3) or 12 g of $NH_2OH \cdot HCl$ (Sect. 7.1.2)] dilute with reagent water (Sect. 7.1.7) to 100 mL.

7.7 STANNOUS CHLORIDE SOLUTION - Add 25 g of $SnCl_2 \cdot 2H_2O$ (Sect. 7.1.9) or 25 g of $SnSO_4$ (Sect. 7.1.10) to 250 mL of 0.5 N H_2SO_4 (Sect. 7.8). This mixture is a suspension and should be stirred continuously during use.

7.8 SULFURIC ACID, 0.5 N - Slowly add 14.0 mL of conc. H_2SO_4 (Sect. 7.1.11) dilute to 1 L with reagent water (Sect. 7.1.7).

8. SAMPLE COLLECTION, PRESERVATION AND STORAGE

8.1 Because of the extreme sensitivity of the analytical procedure and the presence of mercury in a laboratory environment, care must be taken to avoid extraneous contamination. Sampling devices, sample containers, and plastic items should be determined to be free of mercury; the sample should not be exposed to any condition in the laboratory that may result in contamination from airborne mercury contamination. All items used in the sample preparation should be soaked in 30% HNO_3 (Sect. 7.1.5) and rinsed three times in reagent water (Sect. 7.1.7).

8.2 The sediment sample should be preserved with nitric acid to an approximate pH of 2.

8.3 Slowly decant the water from the settled sediment sample. Transfer the sediment sample into a Pyrex tray and mix thoroughly with a Teflon spatula. Discard sticks, stones, shells, living or dead tissues and other foreign objects from the sediment sample.

8.4 Transfer the sediment from the Pyrex tray to a 10-mesh (approximately 2-mm) sieve collecting the sediment sample in an appropriate container. If enough sample has been collected, a second container may be used for the percent wet weight determination.

8.5 While the sample may be analyzed without drying, it has been found to be more convenient to analyze a dry sample. Moisture may be driven off in a drying oven at a temperature of 60°C. No mercury losses have been observed by using this drying step. The dry sample should be pulverized and thoroughly mixed before the aliquot is weighed.

9. CALIBRATION AND STANDARDIZATION

9.1 Transfer 0.5, 1.0, 2.0, 5.0 and 10 mL aliquots of the 0.1 μg/mL CAL (Sect. 7.3) to a series of 300-mL BOD bottles. These BOD bottles will contain 0.5 to 1.0 μg of Hg and are used to calibrate the instrument.

9.2 To each of the BOD bottles add enough reagent water (Sect. 7.1.7) to make a total volume of 10 mL. Add 5 mL of aqua regia (Sect. 7.2) immediately cap and cover the top of the BOD bottle with aluminum foil or other appropriate cover.

9.3 Construct a standard curve by plotting peak height or maximum response of the standards (obtained in Sect. 11.7) versus micrograms of mercury contained in the bottles. The standard curve should comply with Sect. 10.2.3. Calibration using computer or calculator based regression curve fitting techniques on concentration/response data is acceptable.

10. QUALITY CONTROL

10.1 Each laboratory using this method is required to operate a formal quality control (QC) program. The minimum requirements of this program consist of an initial demonstration of laboratory capability by analyses of laboratory reagent blanks, fortified blanks and samples used for continuing check on method performance. Standard Reference Materials (SRMs)[8, 9, 10] are available and should be used to validate laboratory performance. Commercially available sediment reference materials are acceptable for routine laboratory use. The laboratory is required to maintain performance records that define the quality of the data generated.

10.2 INITIAL DEMONSTRATION OF PERFORMANCE.

10.2.1 The initial demonstration of performance is used to characterize instrument performance (MDLs and linear calibration ranges) for analyses conducted by this method.

10.2.2 A mercury MDL should be established using LFM at a concentration of two to five times the estimated detection limit[11]. To determine MDL values, take seven replicate aliquots of the LFM and process through the entire analytical method. Perform all calculations defined in the method and report the concentration values in the appropriate units. Calculate the MDL as follows:

$$MDL = (t) \times (S)$$

where: t = Student's t value for a 99% confidence level and a standard deviation estimate with n-1 degrees of freedom is, t = 3.14 for seven replicates.

S = standard deviation of the replicate analyses.

A MDL should be determined every six months or whenever a significant change in background or instrument response is expected (e.g., detector change).

10.2.3 Linear calibration ranges - The upper limit of the linear calibration range should be established for mercury by determining the signal responses from a minimum of three different concentration standards, one of which is close to the upper limit of the linear range. Linear calibration ranges should be determined every six months or whenever a significant change in instrument response is observed.

10.3 ASSESSING LABORATORY PERFORMANCE - REAGENT AND FORTIFIED BLANKS

10.3.1 The laboratory must analyze at least one LRB (Sect. 3.7) with each set of samples. LRB data are used to assess contamination from the laboratory environment and to characterize spectral background from the reagents used in sample processing. If a mercury value in a LRB exceeds its determined MDL, then laboratory or reagent contamination is suspect. Any determined source of contamination should be eliminated and the samples reanalyzed.

10.3.2 The laboratory must analyze at least one LFB (Sect. 3.5) with each batch of samples. Calculate accuracy as percent recovery (Sect. 10.4.2). If recovery of mercury falls outside control limits (Sect. 10.3.3), the method is judged out of control. The source of the problem should be identified and resolved before continuing analyses.

10.3.3 Until sufficient data (usually a minimum of 20 to 30 analyses) become available, each laboratory should assess its performance against recovery limits of 85-115%. When sufficient internal performance data become available, develop control limits from the percent mean recovery (x) and the standard deviation (S) of the mean recovery. These data are used to establish upper and lower control limits as follows:

$$\text{UPPER CONTROL LIMIT} = x + 3S$$
$$\text{LOWER CONTROL LIMIT} = x - 3S$$

After each five to ten new recovery measurements, new control limits should be calculated using only the most recent 20 to 30 data points.

10.4 ASSESSING ANALYTE RECOVERY - LABORATORY FORTIFIED SAMPLE MATRIX

10.4.1 The laboratory must add a known amount of mercury to a minimum of 10% of samples or one sample per sample set, whichever is greater. Select a sediment sample that is representative of the type of sediment being analyzed and has a low mercury background. It is recommended that this sample be analyzed prior to fortification. The fortification should be 20% to 50% higher than the analyzed value. Over time, samples from all routine sample sources should be fortified.

10.4.2 Calculate the percent recovery, corrected for background concentrations measured in the unfortified sample, and compare these values to the control limits established in Sect. 10.3.3 for the analyses of LFBs. A recovery calculation is not required if the concentration of the analyte added is less than 10% of the sample background concentration. Percent recovery may be calculated in

units appropriate to the matrix, using the following equation:

$$R = \frac{C_s - C}{s} \times 100$$

where, R = percent recovery
C_s = fortified sample concentration
C = sample background concentration
s = concentration equivalent of fortifier added to sediment sample.

10.4.3 If mercury recovery falls outside the designated range, and the laboratory performance is shown to be in control (Sect. 10.3), the recovery problem encountered with the fortified sediment sample is judged to be matrix related, not system related. The result for mercury in the unfortified sample must be labelled to inform the data user that the results are suspect due to matrix effects.

11. PROCEDURE

11.1 Weigh 0.2-g portions of dry sample and place in bottom of a BOD bottle. Add 5 mL of reagent water (Sect. 7.1.7) and 5 mL of aqua regia (Sect. 7.2) immediately cap and cover the top of the BOD bottle with aluminum foil or other appropriate cover. Optionally a range from 0.033 g to 3.4 g may be used to adjust the response to stay within the linear range of the standards.

11.2 Mix thoroughly, and place in the water bath for 2 min at 95°C.

11.3 Remove the BOD bottles and allow to cool. Add 50 mL reagent water (Sect. 7.1.7) and 15 mL potassium permanganate solution (Sect. 7.5) to each sample bottle. Cap and cover the top of the BOD bottle with aluminum foil or other appropriate cover. Mix thoroughly, and place in the water bath for 30 min at 95°C.

An alternate digestion procedure employing an autoclave may also be used. In this method 5 mL of conc. H_2SO_4 (Sect. 7.1.11) and 2 mL of conc. HNO_3 (Sect. 7.1.5) are added to 0.2 g sediment sample. Then 5 mL of saturated potassium permanganate solution is added and the BOD bottle is capped with a piece of aluminum foil. The samples are then autoclaved at 121°C/15 psi. for 15 min.

11.4 Turn on the spectrophotometer and circulating pump. Adjust the pump rate to 1 L/min. Allow the spectrophotometer and pump to stabilize.

11.5 Cool the BOD bottles to room temperature and dilute in the following manner:

11.5.1 To BOD bottles containing the instrument calibration standards laboratory fortified blank (LFB) and laboratory reagent blank (LRB) add 50 mL of reagent water (Sect. 7.1.7).

11.5.2 To BOD bottles containing the sediment samples, quality control sample (QCS) and laboratory fortified sample matrix (LFM) add 55 mL of reagent water (Sect. 7.1.7).

11.6 To each BOD bottle, add 6 mL of $NaCl-(NH_2OH)_2 \cdot H_2SO_4$ (Sect. 7.6) to reduce the excess permanganate.

11.7 Treating each bottle individually:

11.7.1 Placing the aspirator inside the BOD bottle and above the liquid, purge the head space (20 to 30 sec) to remove possible gaseous interferents.

11.7.2 Add 5 mL of $SnCl_2$ solution (Sect. 7.7) and immediately attach the bottle to the aeration apparatus.

11.7.3 The absorbance, as exhibited either on the spectrophotometer or the recorder, will increase and reach maximum within 30 sec. As soon as the recorder pen levels off, approximately 1 min, open the bypass value (or optionally remove aspirator from the BOD bottle if it is vented under the hood) and continue the aeration until the absorbance returns to its minimum value.

11.8 Close the bypass value, remove the aspirator from the BOD bottle and continue the aeration. Repeat step (Sect. 11.7) until all BOD bottles have been aerated and recorded.

12. CALCULATIONS

12.1 Measure the peak height of the unknown from the chart and read the mercury value from the standard curve.

12.2 Calculate the mercury concentration in the sample by the formula:

$$\mu g\ Hg/g = \frac{\mu g\ Hg\ in\ the\ aliquot}{wt.\ of\ the\ aliquot\ in\ grams}$$

12.3 Report mercury concentrations as follows: Below 0.1 μg/g, < 0.1 μg/g; between 0.1 and 1 μg/g, to the nearest 0.01 μg; between 1 and 10 μg/g, to nearest 0.1 μg; above 10 μg/g, to nearest μg.

13. PRECISION AND ACCURACY

13.1 The standard deviation for mercury in sediment samples are reported as 0.29 ± 0.02 μg Hg/g and 0.82 ± 0.03 μg Hg/g with recoveries for LFM being 97% and 94% respectively. These sediment samples were fortified with methylmercuric chloride.

Quality assurance data for the sediment survey was contributed by U.S. EPA, Environmental Research Laboratory - Duluth. See Table 1.

14. REFERENCES

1. Bishop, J.N., "Mercury in Sediments", Ontario Water Resources Comm., Toronto, Ontario, Canada, 1971.

2. Glass, G.E.; Sorensen, J.A.; Schmidt, K.W.; Rapp Jr., G.R.; "New Source Identification of Mercury Contamination in the Great Lakes", Envion. Sci. and Technol., Vol. 24, No. 7, 1990.

3. Salma, M., private communication, EPA Cal/Nev Basin Office, Almeda, California.

4. "Safety in Academic Chemistry Laboratories", American Chemical Society Publication, Committee on Chemical Safety, 3rd Edition, 1979.

5. "OSHA Safety and Health Standards, General Industry", (29CFR 1910), Occupational Safety and Health Administration, OSHA 2206, revised January, 1976.

6. "Proposed OSHA Safety and Health Standards, Laboratories", Occupational Safety and Health Administration, Federal Register, July 24, 1986.

7. "Specification for Reagent Water", D1193, Annual Book of ASTM Standards, Vol. 11.01, 1990.

8. National Institute of Standards and Technology, Office of Standards Reference Materials, Gaithersburg, MD 20899: Estuarine Sediment (SRM 1646), Trace Elements in a Calcerous Loam Soil (CRM 8032), Trace Elements in Lightly Sandy Soil (CRM 8033), Trace Elements in Sewer Sludge-Domestic (CRM 8034), Trace Elements in Sewer Sludge-Industrial (CRM 8035).

9. Branch of Geochemistry, US Geological Survey, 12201 Sunrise Valley Drive, Reston, VA 22092: Marine Mud (MAG-1).

10. National Research Council of Canada, Marine Analytical Chemistry Standards Program, Division of Chemistry, Montreal Road, Ottawa, Ontario K1A OR9, Canada: Marine Sediments (BCSS-1, MESS-1, and PACS-1).

11. Code of Federal Regulations 40, Ch. 1, Pt. 136 Appendix B.

TABLE 1. QUALITY ASSURANCE SUMMARY FOR 15 SEDIMENT ANALYSES - 1988 SURVEY OF MINNESOTA LAKES[1, 2].

Parameter	Value	Number of Samples or Sample Pairs
Detection Limit in Flask[3] (ng Hg/L)	6.6	471
Precision (ng Hg/L)		
Lab	27	29
Field	26	96
Bias (%)	-2	30
Spike Recovery (%)	100 ± 7	27
Loss on Drying (%)	5.3 ± 1.0	72

[1] Data were furnished by Gary Glass, U.S. EPA, Environmental Research Laboratory - Duluth, Minnesota 55804, and John A. Sorensen, College of Science and Engineering, University of Minnesota, Duluth, Minnesota 55812.

[2] The analytical instrument used to achieve the precision and accuracy included: Perkin Elmer atomic absorption spectrophotometers (Model 403 and 5000) equipped with deuterium background correctors, electrodeless discharge lamp (ME-782) and power supply (APR), and Heath Schlumberger (SR-206) chart recorder. A slit width of 1 mm (spectral band with 0.07 nm) was used at a wavelength of 253.7 nm. The instruments were operated in the concentration mode (10 x) with the integration set at 10 average (ten samples of the signal are averaged as one value per second). The concentration readout of the signal was recorded on the strip chart at 20 mv/25 cm chart width. The elemental mercury analyte was circulated (1 L/min) through a (18 x 1.8 cm) cylindrical absorption cell using a Neptune Dyna Pump. After the atomic absorption resulting from the presence of mercury vapor reached a maximum in about 0.5-1.0 min, the pump was turned off and the absorption peak climbed to its final value.

[3] Long, G.L.; Winefordner, J.D.; Anal. Chem. 1983, Vol. 55: 712A-724A.

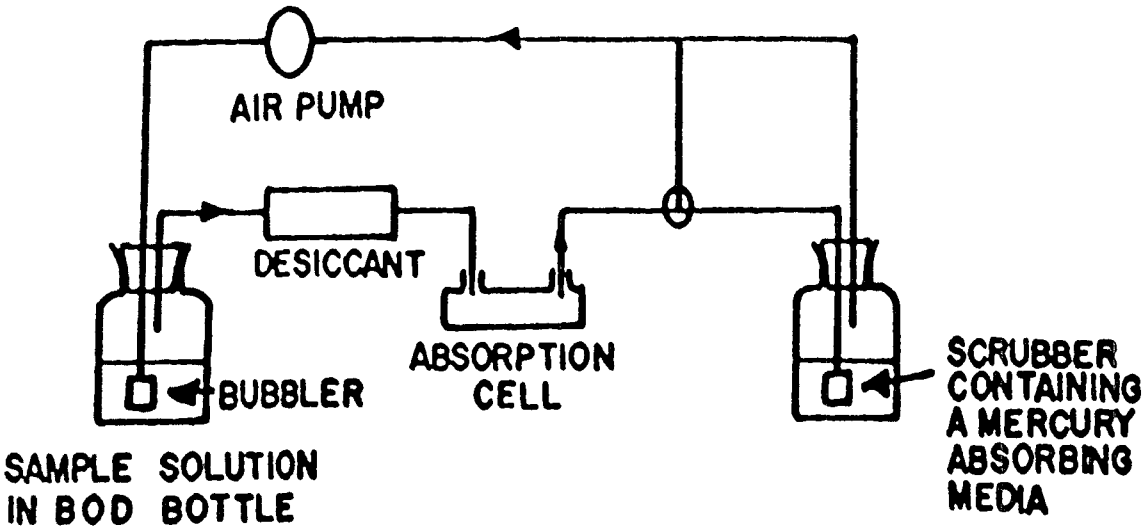

Figure 1. Apparatus for Flameless Mercury Determination

Because of the toxic nature of mercury vapor, inhalation must be avoided. Therefore, a bypass has been included in the system to either vent the mercury vapor into a exhaust hood or pass the vapor through some absorbing media, such as:

a) equal volumes of 0.1 N $KMnO_4$ and 10% H_2SO_4
b) 0.25% iodine in a 3% KI solution.

A specially treated charcoal that will absorb mercury vapor is also available from Barnebey and Cheney, P.O. Box 2526, Columbus, OH 43216, Catalog No. 580-13 or 580-22.

METHOD 245.6

DETERMINATION OF MERCURY IN TISSUES BY COLD VAPOR ATOMIC ABSORPTION SPECTROMETRY

Edited by Larry B. Lobring and Billy B. Potter
Inorganic Chemistry Branch
Chemistry Research Division

Revision 2.3
April 1991

ENVIRONMENTAL MONITORING SYSTEMS LABORATORY
OFFICE OF RESEARCH AND DEVELOPMENT
U.S. ENVIRONMENTAL PROTECTION AGENCY
CINCINNATI, OHIO 45268

METHOD 245.6

DETERMINATION OF MERCURY IN TISSUES BY COLD VAPOR ATOMIC ABSORPTION SPECTROMETRY

1. SCOPE AND APPLICATION

1.1 This procedure measures total mercury (organic + inorganic) in biological tissue samples.

1.2 The range of the method is 0.2 to 5 μg/g. The range may be extended above or below the normal range by increasing or decreasing sample size or by optimizing instrument sensitivity.

2. SUMMARY OF METHOD

2.1 A weighed portion of the tissue sample is digested with sulfuric and nitric acid at 58°C followed by overnight oxidation with potassium permanganate and potassium persulfate at room temperature. Mercury in the digested sample is reduced with stannous chloride to elemental mercury and measured by the conventional cold vapor atomic absorption technique.

3. DEFINITIONS

3.1 BIOCHEMICAL OXYGEN DEMAND (BOD) BOTTLE - BOD bottle, 300 ± 2 mL with a ground glass stopper or an equivalent flask, fitted with a ground glass stopper.

3.2 CALIBRATION BLANK - A volume of ASTM type II reagent water prepared in the same manner (acidified) as the calibration standard.

3.3 CALIBRATION STANDARD (CAL) - A solution prepared from the mercury stock standard solution used to calibrate the instrument response with respect to analyte concentration.

3.4 INSTRUMENT DETECTION LIMIT (IDL) - The mercury concentration that produces a signal equal to three times the standard deviation of the blank signal.

3.5 LABORATORY FORTIFIED BLANK (LFB) - An aliquot of ASTM type II reagent water to which known quantities of inorganic and/or organic mercury are added in the laboratory. The LFB is analyzed exactly like a sample, and its purpose is to determine whether method performance is within accepted control limits.

3.6 LABORATORY FORTIFIED SAMPLE MATRIX (LFM) - A portion of a tissue sample to which known quantities of calibration standard are added in the laboratory. The LFM is analyzed exactly like a sample, and its purpose is to determine whether the sample matrix contributes

bias to the analytical results. The background concentrations of the analytes in the sample matrix must be determined in a separate aliquot and the measured values in the LFM corrected for the concentrations found.

3.7 LABORATORY REAGENT BLANK (LRB) - An aliquot of ASTM type II reagent water that is treated exactly as a sample including exposure to all glassware, equipment, and reagents used in analyses. The LRB is used to determine if method analyte or other interferences are present in the laboratory environment, the reagents or apparatus.

3.8 LINEAR DYNAMIC RANGE (LDR) - The concentration range over which the analytical working curve remains linear.

3.9 METHOD DETECTION LIMIT (MDL) - The minimum concentration of mercury that can be identified, measured and reported with 99% confidence that the analyte concentration is greater than zero and determined from analysis of laboratory fortified tissue sample matrix (LFM).

3.10 QUALITY CONTROL SAMPLE (QCS) - A tissue sample containing known concentration of mercury derived from externally prepared test materials. The QCS is obtained from a source external to the laboratory and is used to check laboratory performance.

3.11 TISSUE SAMPLE - A biological sample matrix exposed to a marine, brackish or fresh water environment. It is limited by this method to the edible tissue portion.

3.12 STOCK STANDARD SOLUTION - A concentrated solution containing mercury prepared in the laboratory using assayed mercuric chloride or stock standard solution purchased from a reputable commercial source.

4. INTERFERENCES

4.1 Interferences have been reported for waters containing sulfide, chloride, copper and tellurium. Organic compounds which have broad band UV absorbance (around 253.7 nm) are confirmed interferences. The concentration levels for interferants are difficult to define. This suggests that quality control procedures (Sect. 10) must be strictly followed.

4.2 Volatile materials which absorb at 253.7 nm will cause a positive interference. In order to remove any interfering volatile materials, the dead air space in the BOD bottle should be purged before the addition of stannous chloride solution.

4.3 Interferences associated with the tissue matrix are corrected for in calibration procedure (Sect. 9).

5. SAFETY

5.1 The toxicity and carcinogenicity of each reagent used in this method has not been fully established. Each chemical should be regarded as a potential health hazard and exposure to these compounds should be minimized by good laboratory practices[1]. Normal accepted laboratory safety practices should be followed during reagent preparation and instrument operation. Always wear safety glasses or full-face shield for eye protection when working with these reagents. Each laboratory is responsible for maintaining a current safety plan, a current awareness file of OSHA regulations regarding the safe handling of the chemicals specified in this method [2, 3].

5.2 Mercury compounds are highly toxic if swallowed, inhaled, or absorbed through the skin. Analyses should be conducted in a laboratory exhaust hood. The analyst should use chemical resistant gloves when handling concentrated mercury standards.

5.3 All personnel handling tissue samples should beware of biological hazards associated with tissue samples. Bivalve mollusk may concentrate toxins and pathogenic organisms. Tissue dissection should be conducted in a bio-hazard hood and personnel should wear surgical mask and gloves.

6. APPARATUS AND EQUIPMENT

6.1 ABSORPTION CELL - Standard spectrophotometer cells 10-cm long, having quartz windows may be used. Suitable cells may be constructed from plexiglass tubing, 1-in. O.D. by 4-1/2-in. long. The ends are ground perpendicular to the longitudinal axis and quartz windows (1-in. diameter by 1/16-in. thickness) are cemented in place. Gas inlet and outlet ports (also of plexiglass but 1/4-in. O.D.) are attached approximately 1/2-in. from each end. The cell is strapped to a burner for support and aligned in the light beam to give the maximum transmittance.

6.2 AERATION TUBING - Inert mercury-free tubing is used for passage of mercury vapor from the sample bottle to the absorption cell. In some systems, mercury vapor is recycled. Straight glass tubing terminating in a coarse porous glass aspirator is used for purging mercury released from the tissue sample in the BOD bottle.

6.3 AIR PUMP - Any pump (pressure or vacuum system) capable of passing air at 1 L/min is used. Regulated compressed air can be used in an open one-pass system.

6.4 ATOMIC ABSORPTION SPECTROPHOTOMETER - Any atomic absorption unit having an open sample presentation area in which to mount the absorption cell is suitable. Instrument settings recommended by the particular manufacturer should be followed. Instruments designed specifically for mercury measurement using the cold vapor technique

are commercially available and may be substituted for the atomic absorption spectrophotometer.

6.5 BIOCHEMICAL OXYGEN DEMAND (BOD) BOTTLE - See Sect. 3.1.

6.6 DRYING TUBE - Tube (6-in. x 3/4-in. OD) containing 20 g of magnesium perchlorate. The filled tube is inserted (in-line) between the BOD bottle and the absorption tube. In place of the magnesium perchlorate drying tube, a small reading lamp is positioned to radiate heat (about 10°C above ambient) on the absorption cell. This avoids water condensation in the cell.

6.7 FLOWMETER - Capable of measuring an air flow of 1 L/min.

6.8 MERCURY HOLLOW CATHODE LAMP - Single element hollow cathode lamp or electrodeless discharge lamp and associated power supply.

6.9 RECORDER - Any multi-range variable speed recorder that is compatible with the UV detection system is suitable.

6.10 WATER BATH - The water bath should have a covered top and capacity to sustain a water depth of 2-in. to 3-in. at 95°C ± 1°C. The dimensions of the water bath should be large enough to accommodate BOD bottles containing CAL, LFB, LFM, LRB, QCS and tissue samples with the lid on.

7. REAGENTS AND CONSUMABLE MATERIALS

7.1 Reagents may contain elemental impurities which bias analytical results. All reagents should be assayed by the chemical manufacturer for mercury and meet ACS specifications.

7.1.1 Hydroxylamine Hydrochloride ($NH_2OH \cdot HCl$), (CASRN 5470-11-1) may be used in place of hydroxylamine sulfate in Sect. 7.6. The assayed mercury level of either compound is not to exceed 0.05 ppm.

7.1.2 Hydroxylamine Sulfate [$(NH_2OH)_2 \cdot H_2SO_4$] (CASRN 10039-54-0); assayed mercury level is not to exceed 1 ppb.

7.1.3 Mercuric Chloride ($HgCl_2$), (CASRN 7487-94-7).

7.1.4 Nitric Acid (HNO_3), concentrated (sp.gr. 1.41), (CASRN 7697-37-2); assayed mercury level is not to exceed 1 ppb.

7.1.5 Potassium Permanganate ($KMnO_4$), (CASRN 7722-64-7); assayed mercury level is not to exceed 0.05 ppm.

7.1.6 Potassium Persulfate ($K_2S_2O_8$), (CASRN 7727-21-1); assayed mercury level is not to exceed 0.05 ppm.

7.1.7 Reagent Water, ASTM type II.[4]

7.1.8 Sodium Chloride (NaCl), (CASRN 7647-14-5); assayed mercury level is not to exceed 0.05 ppm.

7.1.9 Stannous Chloride ($SnCl_2 \cdot 2H_2O$), (CASRN 10025-69-1); assayed mercury level is not to exceed 0.05 ppm.

7.1.10 Stannous Sulfate ($SnSO_4$), (CASRN 7488-55-3); assayed mercury level is not to exceed 0.05 ppm.

7.1.11 Sulfuric Acid (H_2SO_4), concentrated (sp.gr. 1.84), (CASRN 7664-93-9); assayed mercury level is not to exceed 1 ppb.

7.2 MERCURY CALIBRATION STANDARD - To each volumetric flask used for serial dilutions, acidify with (0.1 to 0.2% by volume) HNO_3 (Sect. 7.1.4). Using mercury stock standard (Sect. 7.3), make serial dilutions to obtain a concentration of 0.1 μg Hg/mL. This standard should be prepared just before analyses.

7.3 MERCURY STOCK STANDARD - Dissolve in a 100-mL volumetric flask 0.1354 g $HgCl_2$ (Sect. 7.1.3) with 75 mL of reagent water (Sect. 7.1.7). Add 10 mL of conc. HNO_3 (Sect. 7.1.4) and dilute to mark. Concentration is 1.0 mg Hg/mL.

7.4 POTASSIUM PERMANGANATE SOLUTION - Dissolve 5 g of $KMnO_4$ (Sect. 7.1.5) in 100 mL of reagent water (Sect. 7.1.7).

7.5 POTASSIUM PERSULFATE SOLUTION - Dissolve 5 g of $K_2S_2O_8$ (Sect. 7.1.6) in 100 mL of reagent water (Sect. 7.1.7).

7.6 SODIUM CHLORIDE-HYDROXYLAMINE SULFATE SOLUTION - Dissolve 12 g of NaCl (Sect. 7.1.8) and 12 g of $(NH_2OH)_2 \cdot H_2SO_4$ (Sect. 7.1.2) or 12 g of $NH_2OH \cdot HCl$ (Sect. 7.1.1) dilute with reagent water (Sect. 7.1.7) to 100 mL.

7.7 STANNOUS CHLORIDE SOLUTION - Add 25 g $SnCl_2 \cdot 2H_2O$ (Sect. 7.1.9) or 25 g of $SnSO_4$ to 250 mL of 0.5 N H_2SO_4 (Sect. 7.8). This mixture is a suspension and should be stirred continuously during use.

7.8 SULFURIC ACID, 0.5 N - Slowly add 14.0 mL of conc. H_2SO_4 (Sect. 7.1.10) dilute to 1 L with reagent water (Sect. 7.1.7).

8. SAMPLE COLLECTION, PRESERVATION AND STORAGE

8.1 Because of the extreme sensitivity of the analytical procedure and the presence of mercury in a laboratory environment, care must be taken to avoid extraneous contamination. Sampling devices, sample containers and plastic items should be determined to be free of mercury; the sample should not be exposed to any condition in the laboratory that may result in contact or airborne mercury contamination.

8.2 The tissue sample should be preserved and dissected in accordance with Method 200.3, "Sample Preparation Procedure for Spectrochemical Determination of Total Recoverable Elements in Biological Tissues", only Sect. 8. Tissue Dissection, is used in this method.

8.3 Weigh 0.2- to 0.3-g portions of each sample and place in the bottom of a dry BOD bottle. Care must be taken that none of the sample adheres to the side of the bottle. Immediately cap and cover the top of the BOD bottle with aluminum foil.

9. CALIBRATION AND STANDARDIZATION

9.1 The calibration curve is prepared from values determined for portions of fortified tissue treated in the manner used for the tissue samples being analyzed. For preparation of the calibration standards, blend a portion of tissue in a Waring blender.

9.2 Transfer accurately weighed portions to each of five dry BOD bottles. Each sample should weigh about 0.2 g. Add 4 mL of conc. H_2SO_4 and 1 mL of conc. HNO_3 to each bottle and place in a water bath maintained at 58°C until the tissue is completely dissolved (30 to 60 minutes).

9.3 Cool and transfer 0.5, 2.0, 5.0 and 10.0 mL aliquots of the CAL (Sect. 7.2) solution containing 0.5 to 1.0 μg of Hg to the BOD bottles containing tissue. Cool to 4°C in an ice bath and cautiously add 15 mL of potassium permanganate solution (Sect. 7.4) and 8 mL of potassium persulfate (Sect. 7.5). Allow to stand overnight at room temperature under oxidizing conditions.

9.4 Construct a standard curve by plotting peak height or maximum response of the standard (obtained in Sect. 11.7) versus micrograms of mercury contained in the bottles. The standard curve should comply with Sect. 10.2.3. Calibration using computer or calculator based regression curve fitting techniques on concentration/response data is acceptable.

10. QUALITY CONTROL

10.1 Each laboratory using this method is required to operate a formal quality control (QC) program. The minimum requirements of this program consist of an initial demonstration of laboratory capability by analyses of laboratory reagent blanks, fortified blanks and samples used for continuing check on method performance. Standard Reference Materials (SRMs)[5, 6] are available and should be used to validate laboratory performance. Commercially available tissue reference materials are acceptable for routine laboratory use. The laboratory is required to maintain performance records that define the quality of data generated.

10.2 INITIAL DEMONSTRATION OF PERFORMANCE

10.2.1 The initial demonstration of performance is used to characterize instrument performance (MDLs and linear calibration ranges) for analyses conducted by this method.

10.2.2 A mercury MDL should be established using LFM at a concentration of two to five times the estimated detection limit[7]. To determine MDL values, take seven replicate aliquots of the LFM and process through the entire analytical method. Perform all calculations defined in the method and report the concentration values in the appropriate units. Calculate the MDL as follows:

$$MDL = (t) \times (S)$$

where, t = Student's t value for a 99% confidence level and a standard deviation estimate with n-1 degrees of freedom [t = 3.14 for seven replicates].

S = standard deviation of the replicate analyses.

A MDL should be determined every six months or whenever a significant change in background or instrument response is expected (e.g., detector change).

10.2.3 Linear calibration ranges - The upper limit of the linear calibration range should be established for mercury by determining the signal responses from a minimum of three different concentration standards, one of which is close to the upper limit of the linear range. Linear calibration ranges should be determined every six months or whenever a significant change in instrument response is observed.

10.3 ASSESSING LABORATORY PERFORMANCE - REAGENT AND FORTIFIED BLANKS

10.3.1 The laboratory must analyze at least one LRB (Sect. 3.7) with each set of samples. LRB data are used to assess contamination from the laboratory environment and to characterize spectral background from the reagents used in sample processing. If an mercury value in a LRB exceeds its determined MDL, then laboratory or reagent contamination is suspect. Any determined source of contamination should be corrected and the samples reanalyzed.

10.3.2 The laboratory must analyze at least one LFB (Sect. 3.5) with each batch of samples. Calculate accuracy as percent recovery (Sect. 10.4.2). If the recovery of mercury falls outside control limits (Sect. 10.3.3), the method is

judged out of control. The source of the problem should be identified and resolved before continuing analyses.

10.3.3 Until sufficient data (usually a minimum of 20 to 30 analyses) become available, each laboratory should assess its performance against recovery limits of 85-115%. When sufficient internal performance data become available, develop control limits from the percent mean recovery (x) and the standard deviation (S) of the mean recovery. These data are used to establish upper and lower control limits as follows:

UPPER CONTROL LIMIT = x + 3S
LOWER CONTROL LIMIT = x - 3S

After each five to ten new recovery measurements, new control limits should be calculated using only the most recent 20 to 30 data points.

10.4 ASSESSING ANALYTE RECOVERY - LABORATORY FORTIFIED SAMPLE MATRIX

10.4.1 The laboratory must add a known amount of mercury to a minimum of 10% of samples or one sample per sample set, whichever is greater. Select a tissue sample that is representative of the type of tissue being analyzed and has a low mercury background. It is recommended that this sample be analyzed prior to fortification. The fortification should be 20% to 50% higher than the analyzed value. Over time, samples from all routine sample sources should be fortified.

10.4.2 Calculate the percent recovery, corrected for background concentrations measured in the unfortified sample, and compare these values to the control limits established in Sect. 10.3.3 for the analyses of LFBs. A recovery calculation is not required if the concentration of the analyte added is less than 10% of the sample background concentration. Percent recovery may be calculated in units appropriate to the matrix, using the following equation:

$$R = \frac{C_s - C}{s} \times 100$$

where, R = percent recovery
C_s = fortified sample concentration
C = sample background concentration
s = concentration equivalent of fortifier added to tissue sample.

10.4.3 If mercury recovery falls outside the designated range, and the laboratory performance is shown to be in control (Sect. 10.3), the recovery problem encountered with the fortified tissue sample is judged to be matrix related, not system related. The result for mercury in the unfortified sample must be labelled to inform the data user that the results are suspect due to matrix effects.

11. PROCEDURE

11.1 Add 4 mL of conc. H_2SO_4 (Sect. 7.1.10) and 1 mL of conc. HNO_3 (Sect. 7.1.4) to each bottle and place in a water bath maintained at 58°C until the tissue is completely dissolved (30 to 60 min).

11.2 Cool to 4°C in an ice bath and cautiously add 5 mL of potassium permanganate solution (Sect. 7.4) in 1 mL increments. Add an additional 10 mL or more of permanganate, as necessary to maintain oxidizing conditions. Add 8 mL of potassium persulfate solution (Sect. 7.5). Allow to stand overnight at room temperature.

As an alternative to the overnight digestion, tissue solubilization may be carried out in a water bath at 80°C for 30 min. The sample is cooled and 15 mL of potassium permanganate solution (Sect. 7.4) added cautiously followed by 8 mL of potassium persulfate solution (Sect. 7.5). At this point, the sample is returned to the water bath and digested for an additional 90 min at 30°C. Calibration standards are treated in the same manner.

11.3 Turn on the spectrophotometer and circulating pump. Adjust the pump rate to 1 L/min. Allow the spectrophotometer and pump to stabilize.

11.4 Cool the BOD bottles to room temperature and dilute in the following manner:

11.4.1 To each BOD bottle containing the CAL, LFB and LRB, add 50 mL of reagent water (Sect. 7.1.7).

11.4.2 To each BOD bottle containing a tissue sample, QCS or LFM, add 55 mL of reagent water (Sect. 7.1.7).

11.5 To each BOD bottle, add 6 mL of sodium chloride-hydroxylamine sulfate solution (Sect. 7.6) to reduce the excess permanganate.

11.6 Treating each bottle individually:

11.6.1 Placing the aspirator inside the BOD bottle and above the liquid, purge the head space (20 to 30 sec) to remove possible gaseous interferents.

11.6.2 Add 5 mL of stannous chloride solution (Sect. 7.7) and immediately attach the bottle to the aeration apparatus.

11.6.3 The absorbance, as exhibited either on the spectrophotometer or the recorder, will increase and reach maximum within 30 sec. As soon as the recorder pen levels off, approximately 1 min, open the bypass value (or optionally remove aspirator from the BOD bottle if it is vented under the hood) and continue the aeration until the absorbance returns to its minimum value.

11.7 Close the bypass value, remove the aspirator from the BOD bottle and continue the aeration. Repeat step (Sect. 11.6) until all BOD bottles have been aerated and recorded.

12. CALCULATIONS

12.1 Measure the peak height of the unknown from the chart and read the mercury value from the standard curve.

12.2 Calculate the mercury concentration in the sample by the formula:

$$\mu g\ Hg/g = \frac{\mu g\ Hg\ in\ the\ aliquot}{wt.\ of\ the\ aliquot\ in\ grams}$$

12.3 Report mercury concentrations as follows: Below 0.1 μg/g, < 0.1 μg/g; between 0.1 and 1 μg/g, to the nearest 0.01 μg; between 1 and 10 μg/g, to nearest 0.1 μg; above 10 μg/g, to nearest μg.

13. PRECISION AND ACCURACY

13.1 The standard deviation for mercury in fish tissue samples are reported as 0.19 ± 0.02 μg Hg/g , 0.74 ± 0.05 μg Hg/g and 0.74 ± 0.05 μg Hg/g with recoveries for LFM being 112%, 93%, and 86%, respectively. These tissue samples were fortified with methyl mercuric chloride.

14. REFERENCES

1. "Safety in Academic Chemistry Laboratories", American Chemical Society Publication, Committee on Chemical Safety, 3rd Edition, 1979.

2. "OSHA Safety and Health Standards, General Industry", (29CFR 1910), Occupational Safety and Health Administration, OSHA 2206, revised January, 1976.

3. "Proposed OSHA Safety and Health Standards, Laboratories", Occupational Safety and Health Administration, Federal Register, July 24, 1986.

4. "Specification for Reagent Water," Annual Book of ASTM Standards, D1193, Vol. 11.01, 1990.

5. National Institute of Standards and Technology, Office of Standards Reference Materials, Gaithersburg, MD 20899: Aquatic Plant - Lagarosiphon major (CRM 8030), Aquatic Plant - Platihypnidium riparioides (CRM 8031), Oyster Tissue (SRM 1566a), Albacore Tuna (RM 50).

6. National Research Council of Canada, Marine Analytical Chemistry Standards Program, Division of Chemistry, Montreal Road, Ottawa, Ontario K1A OR9, Canada: Dogfish Liver (DOLT-1), Dogfish Muscle (DORM-1), Non Defatted Lobster Hepatopancreas (LUTS-1), Lobster Hepatopancreas (TORT-1).

7. Code of Federal Regulations 40, Ch. 1, Pt. 136 Appendix B.

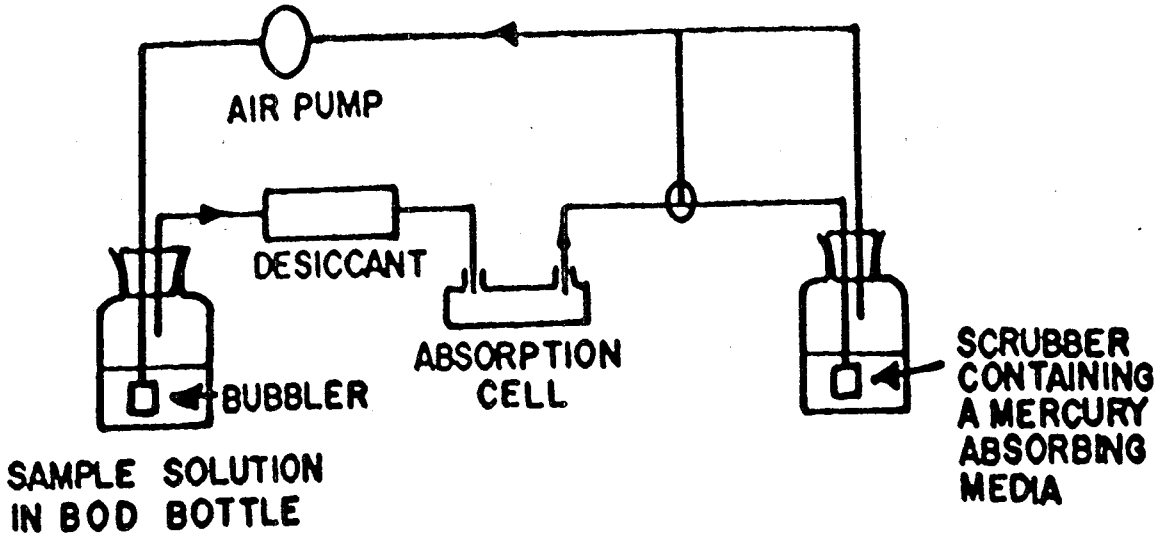

Figure 1. Apparatus for Flameless Mercury Determination

Because of the toxic nature of mercury vapor, inhalation must be avoided. Therefore, a bypass has been included in the system to either vent the mercury vapor into a exhaust hood or pass the vapor through some absorbing media, such as:

a) equal volumes of 0.1 N $KMnO_4$ and 10% H_2SO_4

b) 0.25% iodine in a 3% KI solution.

A specially treated charcoal that will absorb mercury vapor is also available from Barnebey and Cheney, P.O. Box 2526, Columbus, OH 43216, Catalog No. 580-13 or 580-22.

*U.S. Government Printing Office: 1991 — 548-187/40551